NUCLEAR REACTOR LABORATORY
AN INTERDEPARTMENTAL CENTER OF
MASSACHUSETTS INSTITUTE OF TECHNOLOGY

JOHN A. BERNARD
Director
Director of Reactor Operations
Principal Research Engineer

138 Albany Street, Cambridge, MA 02139-4296
Telefax No. (617) 253-7300
Tel. No. (617) 253-4211/4202

Activation Analysis
Coolant Chemistry
Nuclear Medicine
Reactor Engineering

September 1, 2000

U.S. Nuclear Regulatory Commission
Washington, D.C. 20555

Attn: Document Control Desk

Subject: Fission Converter Startup Report
Facility License No. R-37, Massachusetts Institute of Technology Research Reactor (MITR); Docket No. 50-20.

Gentlemen:

The Massachusetts Institute of Technology hereby submits the report, "Startup of the MITR Fission Converter Facility" in accordance with MITR-II Technical Specification 6.6.5. Please contact the undersigned if any further information is required.

Sincerely,

Thomas H. Newton, Jr., PE
Reactor Engineer
MIT Research Reactor

Lin-Wen Hu, Ph.D.
Reactor Utilization Engineer
MIT Research Reactor

John A. Bernard, Ph.D.
Director of Reactor Operations
MIT Research Reactor

JAB/gw

Attachment: Startup Report for the MITR Fission Converter Facility

cc: USNRC - Senior Project Manager,
NRR/ONDD

USNRC - Region I - Project Scientist,
Effluents Radiation Protection Section (ERPS)
FRSSB/DRSS

A020

STARTUP OF THE MITR FISSION CONVERTER FACILITY

AUGUST 31, 2000

Massachusetts Institute of Technology
Docket No. 50-20 – License No. R-37

Submitted by

MIT Nuclear Reactor Laboratory
138 Albany Street
Cambridge, MA 02139

TABLE OF CONTENTS

1. Introduction 1

2. Organization 1

3. Results of Startup Testing 2

a) Flow Measurements (T.S. 6.6.5(2b)) 2

b) Fuel Loading (T.S.6.6.5(2a)) 4

c) Hot Channel Factor (T.S. 6.6.5(2c)) 6

d) Converter Control Shutter Reactivity 7

e) Power Measurements (T.S. 6.6.5(2d)) 7

f) Design Features 9

g) Operating Requirements 10

h) Radiation Surveys 11

4. Evaluation and Assessment 12

a) Evaluation (T.S. 6.6.5(1a)) 12

b) Reassessment of Safety Evaluation Report (T.S. 6.6.6(1b)) 12

5. Conclusion 13

Fission Converter Technical Specification Index 15

Startup of the MITR Fission Converter Facility

1. Introduction

The U.S. Nuclear Regulatory Commission (NRC) issued Amendment No. 31 to the Operating License for the MIT Research Reactor on 21 December 1999. This amendment approved operation of a fission converter facility. The immediate purpose for the facility is to provide an epithermal neutron beam for use in the ongoing MIT clinical trials of neutron capture therapy.

The fission converter tank was installed in March 2000 and fuel was transferred to the tank in April 2000. Certain of these activities were observed by the U.S. Nuclear Regulatory Commission as part of a routine inspection. Startup testing of the fission converter under conditions of forced convection heat removal began on 31 May 2000.

MITR Technical Specification 6.6.5 requires that a written startup report be submitted within 90 days of the completion of fission converter startup testing. This document is submitted to satisfy that requirement.

2. Organization

Information on the fission converter startup testing is contained in Sections 3 and 4 of this report. Section 3 reports actual test results for flow disparity, fuel loading, hot channel factor, and the power distribution, reactivity, and power measurements. Section 4 provides an evaluation of facility performance and the need for a reassessment of the fission converter safety evaluation report. Information is presented in the chronological order in which it was obtained because later results build on the earlier ones. As a result, the sequence in the report differs from that in Technical

Specification 6.6.5. However, all required information is provided and subparagraphs in this report are clearly labeled to show their correspondence to the relevant section of the technical specification.

3. Results of Startup Testing

Procedures for the conduct of the startup testing were approved under MITR Safety Review #0-99-7, a copy of which was previously provided to the U.S. Nuclear Regulatory Commission as an item of information.

a) Flow Measurements (T.S. 6.6.5(2b))

Technical Specification 6.6.2.1(2) requires that

$$F_f d_f \geq 0.80$$

where F_f is the fraction of the primary flow that goes through the fueled region to the total primary coolant flow, and d_f is defined as the ratio of the minimum flow to the average flow in the coolant channel.

The quantity d_f is known as the flow disparity. Measurements of both F_f and d_f were first made using the actual fission converter tank with eleven 3/4" PVC pipes placed in the grid plate. The cross-sectional area of the pipes was chosen to produce a greater pressure drop than that of the actual fuel elements. This facilitated the measurement and yielded a conservative result. A description of the flow testing equipment and the procedure is documented in "Report of Flow Testing for the Fission Converter Beam Test Tank," which is filed as part of the quality assurance package for the fission converter system. Measured values of the flow

disparity were all found to be above 0.9. The ideal value would be 1.0 because that would mean that all channels received equal flow.

The quantity F_f was also measured. Its ideal value is also 1.0 which implies that no flow bypasses the fueled region. Comparison between system flow and the sum of the channel flows indicated that a significant amount of flow was bypassing the fueled region and hence F_f was quite low. Subsequent investigation showed that this excessive bypass flow was occurring between the plug welds that hold the plate that separates the downcomer region in the fission converter tank from the interior portion of the tank itself. The situation was discussed with the Standing Sub-committee of the MIT Committee on Reactor Safeguards on 3 March 2000 and, with that committee's approval, the fission converter tank was modified by installing downcomer pipes so that the incoming flow would go directly to the plenum below the fuel without any possibility of bypass. (Refer to MITR Safety Review #M-00-1 for diagrams and further description. A copy is attached as Appendix A to this report.)

The flow tests (bypass and disparity factor) were repeated once the fission converter tank modification was completed. The value of F_f was now about 0.95 indicating that total bypass flow was approximately 5% of the total flow. This result was excellent. The minimum value of d_f was measured to be 0.909. A value of 0.864 had been assumed in the Fission Converter Safety Evaluation Report. This figure had been a worst case

estimate obtained from examination of similar measurements for the MITR core. Hence, for the fission converter, the actual disparity was less than that assumed. The value of $F_f d_f$ is 0.863 if the worst-case measured values (0.95 and 0.909) are used. Accordingly, the requirement of Technical Specification 6.6.2.1(2) is met.

b) Fuel Loading (T.S. 6.6.5(2a))

The following technical specifications are relevant to this portion of the startup testing:

#	Specification
6.6.2.1(4)	Positions in Fueled Region
6.6.2.1(5)	Fission Density $\leq 1.8 \times 10^{21}$ cm^{-3}
6.6.2.1(6)	Maximum K-effective ≤ 0.90
6.6.2.1(7)	Fuel element orientation
6.6.2.3(1)	Self-protection

The Fission Converter Safety Evaluation Report allows the use of either fresh or irradiated MITR fuel. Also, either light or heavy water may be used as the coolant. For the system's initial operation, the choices made were irradiated fuel and D_2O coolant.

A written procedure, which was also approved under MITR Safety Review #0-99-7 and which was also previously provided to the U.S. Nuclear Regulatory Commission, was prepared to address fuel loading. A prerequisite was that a practice fuel loading be done with non-radioactive dummy elements. This was done in March 2000. Eleven dummy

elements were successfully loaded into the available eleven positions in the fission converter tank using the approved procedure.

The actual fuel loading was done in April 2000. Partially-spent MITR elements were chosen so that the fission density and self-protection limits were both met. Peak burnups of the elements selected for use in the fission converter were between 70% and 85% of the MITR technical specification limit (T.S. 6.6.2.1(5)). (Note: Given the rate of use of the fission converter and its power level, these elements will not attain the maximum allowed fission density for at least a decade. Also, the chosen elements had all been irradiated in the MITR within the last 1.5 years. Hence, even with no additional irradiation on the fission converter, these elements will remain self-protecting for many years (T.S. 6.6.2.3(1)).

A problem developed in the actual loading in that only ten elements could be inserted. There was insufficient space for the eleventh element. This was unexpected because eleven dummy elements had been loaded. However, the dummies have more restrictive dimensional tolerances than the actual elements. This may account for the problem. Ten elements were loaded and a solid aluminum spacer was placed in one of the outermost positions (T.S. 6.6.2.1(4)). All fuel elements were oriented so that their plates were "edge on" towards the MITR core (T.S. 6.6.2.1(7)).

The Monte-Carlo code MCNP was used to calculate the value of k-effective for the actual fuel loading. A value of 0.266 was obtained. This is well below the maximum allowed value of 0.90 (T.S. 6.6.2.1(6)).

c) Hot Channel Factor (T.S. 6.6.5(2c))

Technical Specification 6.6.2.1(1) requires that

$$F_p F_{Hc} < 1.53$$

where F_p is the fraction of the total power deposited in the fueled region (both fuel and coolant) and F_{Hc} is the ratio of the maximum power deposited in the hottest fuel plate to the average power per fuel plate. These parameters are known as the power deposition factor and the nuclear hot channel factor respectively.

The actual fuel loading was input to MCNP in order to determine both F_p and F_{Hc}. The power deposition factor was calculated to be 0.88. The power profile across the fission converter was also calculated. This profile is shown in Figure 1. The quantity F_{Hc} was calculated to be 1.47, which is below (and hence more conservative than) the figure of 1.53 that had been assumed in the Fission Converter Safety Evaluation Report. The quantity $F_p F_{Hc}$ is therefore 1.29, and the requirement of Technical Specification 6.6.2.1(1) is met.

d) Converter Control Shutter Reactivity

Technical Specifications 6.6.2.2(1) and 6.6.2.2(2) limit the reactivity worth of the converter-control shutter (CCS) to that allowed for a movable experiment by MITR Technical Specification 6.1(1). The CCS reactivity was measured during the initial startup of the fission converter using a written procedure that was approved under MITR Safety Review #0-99-7. Both integral and differential reactivity values were measured. The CCS integral reactivity was measured to be 0.014% $\Delta K/K$ or 18 millibeta. A figure of 0.035% ± 0.060% $\Delta K/K$ (45 ± 76 millibeta) had been calculated using MCNP and reported in the Fission Converter Safety Evaluation Report. The measured value was less than this calculated figure but well within the calculation's error band. The maximum differential reactivity was measured to be approximately 0.0014% $\Delta K/K$ per inch (1.8 millibeta/inch).

The low integral and differential reactivity values for the CCS indicate that the fission converter is only weakly coupled to the MITR. The measured integral value is well below the limit of 0.20% $\Delta K/K$ (254 millibeta) for movable experiments as specified by MITR Technical Specification 6.1(1).

e) Power Measurements (T.S. 6.6.5(2d))

Technical Specification 6.6.2.5(3) requires that there be an alarm at 110% or less of the fission converter's nominal operating power for

fission converter operation using forced convection. This in turn requires that the nominal operating power be determined. This was done by both calculation and measurement.

Predictions of the nominal power were made using the MCNP code. For D_2O coolant and irradiated MITR fuel, a power of 81.5 kW at 5 MW reactor power was obtained. (Refer to Fission Converter SER, Table 2.3 on page 2-9.) This calculation was repeated with the selected MITR fuel elements as an input to the code and a figure of 82.9 kW was obtained. This is equivalent to 74.6 kW at a reactor power of 4.5 MW.

A measurement of the nominal operating power was made on 2 June 2000 during the initial stepwise approach to full power. A written procedure, approved under MITR Safety Review #0-99-7, was observed. The measurement was made by means of a calorimetric. The maximum reactor operating power achieved during this procedure was 4.5 MW and the corresponding fission converter power was 87.1 kW. Thus, the measured value (87.1 kW) and the calculated value (74.6 kW) were in reasonable agreement. (Note: Additional measurements of fission converter power are planned. We expect that the agreement with the calculated number will improve because of potential reductions in the error bar associated with the measurement.)

The measured value was extrapolated to a reactor operating power of 5.0 MW to obtain a figure of 96.8 kW. This figure was used in setting the fission converter neutronic power alarm (110% of the fission converter

nominal operating power) and in setting the CCS closure power (<300 kW).

It should be noted that the measured value of the fission converter nominal power is very conservative when compared to the analysis given in the SER. The latter assumed 300 kW in order to allow for a predicted nominal power of 251.0 kW for fresh MITR fuel with H_2O coolant with a reactor power of 10 MW.

f) Design Features

Several technical specifications impose design requirements on the fission converter. These have all been met. A summary is given below.

#	Status
6.6.2.5(1)	The safety channels required by Table 6.6.2.5-1 have all been installed and calibrated.
6.6.2.5(2)	The equipment listed in Table 6.6.2.5-2 is all supplied with emergency power.
6.6.4.1	The selected coolant is currently D_2O.
6.6.4.2	The specified materials requirements have been observed.
6.6.4.3	Ten fuel elements have been installed.
6.6.4.4	No sample assemblies are currently installed.
6.6.4.5	The removable aluminum block is installed.
6.6.4.6	The primary coolant system, including the pumps, is physically above the fission converter tank so as to preclude syphoning.
6.6.4.7	The specified interlocks have been installed and tested.
6.6.4.8	Refer to Section 3(e) of this report.

g) Operating Requirements

Several technical specifications impose operational requirements. These are all being met as shown in the following summary:

#	Status
6.6.1.1(1) and 6.6.1.2(1)	The measured values for power, flow, outlet temperature, and level were 87.1 kW, 87.6 gpm, 35.7 °C, and 20" below top of tank, for a reactor power of 4.5 MW as obtained during the initial startup. The actual operating point will, of course, depend on the reactor's power and the temperature of the heat sink. However, these four values should be typical. They define an operating point that is well below both the safety limits and the limiting safety system settings.
6.6.2.1(3)	No changes of fuel loading are anticipated in the immediate future. An evaluation of the hot channel factor is required by the written procedure that governs fuel changes.
6.6.2.1(8)	A requirement to install the fission converter lid prior to operation is included in the facility's startup checklist.
6.6.2.2(1)	See Section 4(b) of this report.
6.6.2.3(1) and 6.6.2.3(2)	Requirements are observed as part of the MITR's fuel handling and storage requirements.
6.6.2.3(3)	This is addressed in PM 1.15.1, page 2.
6.6.2.4	Provisions (1), (3) ,and (4) are applicable because the coolant is D_2O. The D_2 concentration in the helium blanket is thus far below the detectable limit. PM 3.15.2 assures sufficient operation of the recombiner.
6.6.2.6(1) and 6.6.2.6(2)	The pH and conductivity are within the bounds.

#	Status
6.6.2.6(3)	The gross β-γ activity is nominally $6x10^{-4}$ μCi/ml with the fission converter shut down, and a factor of five greater when operating.
6.6.3	These requirements have been incorporated in the surveillance procedures for the fission converter.

h) Radiation Surveys

Radiation surveys were performed in conjunction with the stepwise increase in power that was conducted on 2 June 2000. Radiation levels on the outer surfaces of the fission converter medical therapy facility room were all less than 1 mR/hr. This was expected because the room was newly built and it was possible to include shielding in the room's design. Radiation levels exterior to some of the existing structures were elevated. In particular, there were significantly higher neutron dose rates in the basement equipment room, basement medical room, and on the reactor top when the fission convert was operational. The first two of these are exclusion areas and no entry is allowed when the fission converter is operating. The third is accessible. Accordingly, additional shielding was added to the region above the fission converter so that radiation levels on the reactor top were returned to their original values. Measures to reduce radiation levels in the two affected exclusion areas are under review.

4. Evaluation and Assessment

a) Evaluation (T.S. 6.6.5(1a))

Operation of the fission converter to date has consisted of the initial power ascension for purposes of startup testing and runs of short duration to verify improvements in shielding. All operation has been done using forced convection. There has been no natural convection operation. This experience, while limited, has established that the fission converter's actual performance closely parallels both the design predictions and specifications. Also, it should be noted that the measured epithermal neutron flux is as predicted. The fission converter facility therefore provides the Massachusetts Institute of Technology with the best epithermal neutron beam in the world for neutron capture therapy.

b) Reassessment of Safety Evaluation Report (T.S. 6.6.5(1b))

Measured values of all parameters associated with the fission converter are more conservative than the values used in the Safety Evaluation Report (SER). Hence, there is no need for a revision to that document based on these measurements. However, there is a need for a revision because of the design changes made in conjunction with the installation of the pipes in the downcomer region. (Refer to Section 3(a) of this report.) An SER revision is being prepared and will be submitted to the U.S. Nuclear Regulatory Commission on or before 31 January 2001. Items that will, or in some instances may, be addressed include:

- The safety limit curve for natural convection cooling is different because of the changes implemented in order to minimize bypass flow. Hence, Figure 3.9 in the Fission Converter Safety Evaluation Report will require replacement.

- An annual measurement of the reactivity worth of the CCS is required. Given the low measured value for this quantity, there is no reason for an annual measurement.

- pH surveillance currently requires a monthly sample. The sample volume, although small, adds up and the net effect is a significant waste of D_2O. For pure water, there is a correlation between pH and conductivity. Hence, there is no need for a monthly pH measurement provided that the conductivity specification is met.

- Operation with natural convection cooling is allowed with the fission converter lid removed for power levels of 10 kW or less. This has not been tested. However, it appears that the lid should be in place regardless of the mode of cooling. (Note: Installation of the lid is currently required by internal procedure prior to any fission converter operation.)

- Limits on the fuel peaking factors are too restrictive. These factors were chosen based on 10 MW operation of the MITR. Satisfaction of these necessitates the use of fuel of a similar burn-up in all fission converter positions. Additional flexibility is desirable and the margin for it exists for 5 or 6 MW operation of the MITR.

5. Conclusion

The startup testing of the MIT Fission Converter Facility that is required by T.S. 6.6.5 has been completed satisfactorily for operation under conditions of forced convection. Operation under conditions of natural convection is also allowed. No testing in that mode has, as yet, been undertaken. A separate report will be submitted when such testing is performed. In the interim, the facility will not be operated in that mode of cooling except for purposes of performing the required startup testing.

Figure 1 **Transverse Power Profile in the Fission Converter Fuel**

D_2O Cooling, Spent Fuel (Average loading 338 g/element)

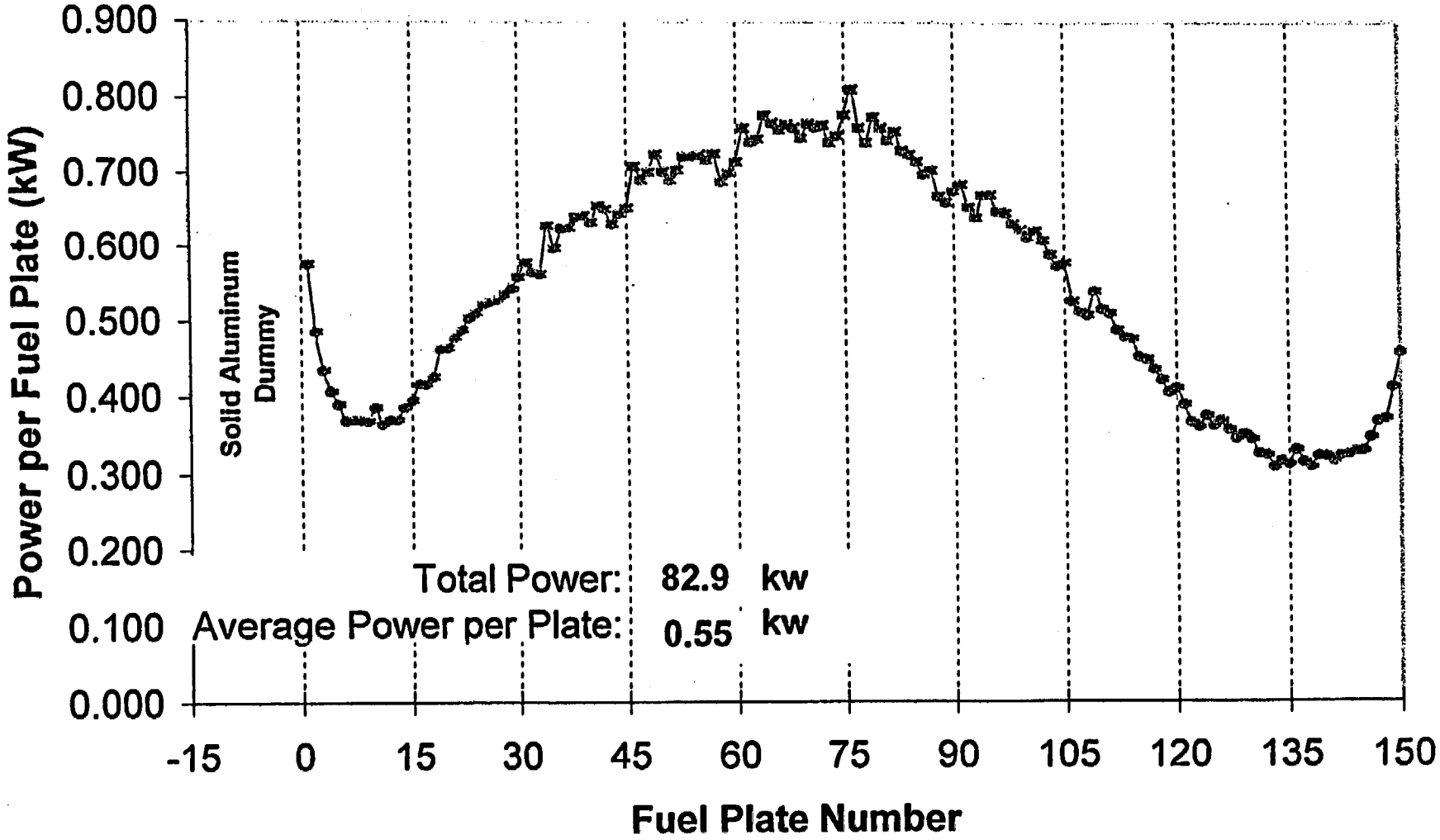

Fission Converter Technical Specification Index

Technical Specification (Provision)	Fission Converter Startup Report Page(s)
6.6.1.1(1)	10
6.6.1.1(2)	-
6.6.1.2(1)	10
6.6.1.2(2)	-
6.6.2.1(1)	6
6.6.2.1(2)	2, 4
6.6.2.1(3)	10
6.6.2.1(4)	4, 5
6.6.2.1(5)	4, 5
6.6.2.1(6)	4, 6
6.6.2.1(7)	4, 5
6.6.2.1(8)	10
6.6.2.2(1)	7, 10
6.6.2.2(2)	7
6.6.2.3(1)	4, 5, 10
6.6.2.3(2)	10
6.6.2.3(3)	10
6.6.2.4(1)	10
6.6.2.4(2)	-
6.6.2.4(3)	10
6.6.2.4(4)	10
6.6.2.5(1)	9
6.6.2.5(2)	9
6.6.2.5(3)	7
6.6.2.5(4)	-
6.6.2.6(1)	10
6.6.2.6(2)	10
6.6.2.6(3)	11
6.6.2.6(4)	-
6.6.3	11

Fission Converter Technical Specification Index (Cont.)

Technical Specification (Provision)	Fission Converter Startup Report Page(s)
6.6.4(1)	9
6.6.4(2)	9
6.6.4(3)	9
6.6.4(4)	9
6.6.4(5)	9
6.6.4(6)	9
6.6.4(7)	9
6.6.4(8)	9
6.6.5	1, 2, 13
6.6.5(1a)	12
6.6.5(1b)	12
6.6.5(2a)	4
6.6.5(2b)	2
6.6.5(2c)	6
6.6.5(2d)	7

Appendix A

MITR SR #M-00-1, "Fission Converter Tank Modification"

Safety Review Form No. M-00-1

Item: Fission Converter Tank Modification

Submitted by T. Newton TN Date 02/24/00

Q/A number if required QA# M-97-3

Does the item change or contradict the

Technical Specifications? _____ Yes* X No

SAR? _____ Yes* X No

*Attach explanation

Description of Change (Attach extra pages if necessary):

See attached sheets.

Safety Evaluation (Attach extra pages if necessary):

See attached sheets.

Summary of Review:

		Yes	No
a)	Does the proposal:		
i)	involve an unreviewed safety question (10CFR50.59(a)(2))		X
ii)	decrease scope of requalification program (10CFR50.54(i-1))		X
iii)	decrease effectiveness of security plan (10CFR50.54(p))		X
iv)	decrease effectiveness of emergency plan (10CFR50.54(q))		X

b) Reviewer's Comments:

Recommend Approval ✓ Yes _____ No

Reviewer L. Tucker Date 3/29/2000

Reviewer [illegible] Date 3/29/2000

Approved [illegible] Date 3/27/00
(Director of Reactor Operations)

10CFR50.59 & 50.54 (p and q) changes logged for reporting to NRC, Date _____

Copy to Director for Operations
Copies circulated to and initialled by all Licensed Personnel
Original to Safety Review File

Unreviewed Safety Question (URSQ) Determination for SR#-M-00-1

This safety review does NOT involve an URSQ. The basis for that conclusion is documented below as required by 10 CFR 50.59(b).

(a) The change does not meet any of the three criteria that define an URSQ. This is shown below:

- No increase in probability or consequences of an analyzed accident or malfunction of equipment important to safety previously evaluated in the safety analysis report (SAR) will occur, because the only change is addition of piping in the Fission Converter downcomer. All flow paths remain the same.
- No new type of accident is created.
- No margin of safety is reduced, because the change does not alter or contradict the bases of any of the Technical Specifications.

ALARA Determination for SR#-M-00-1

This safety review has no impact on ALARA (As Low As Reasonably Achievable) requirements because no radiological work is involved.

Safety Review #-M-00-1 – Modification of Fission Converter Tank

Description of Change

As a result of flow testing, it was identified that significant leakage of water was occurring around the fission converter tank downcomer baffle plates thereby bypassing the normal flow path through the fuel region. In order to prevent this, a 2" pipe will be installed in the downcomer and welded to the top downcomer pipe entrance and to a vertical plate extending the downcomer at the tank bottom (see drawing).

In addition, during the flow testing, a small leakage path around the grid support plate was identified. This path will be seal welded during the pipe installation.

This change does not affect any technical specification or the reactor SAR, but does require changes in the Fission Converter Safety Evaluation Report. There changes are in Section 3.1.1.1, where the tank is described and Section 3.5.2, where the safety limits for natural circulation operations are discussed.

The ability to remove the inlet and outlet pipes through the tank lid for natural circulation remains unchanged, as the inlet pipe which penetrated into the downcomer now will be inserted into the downcomer pipes.

Safety Evaluation

1. Forced Convection The flow path remains unchanged. Because any possible bypass path from the downcomer region has been eliminated, safety is improved. All flow characteristics as analyzed in the FC SER remain unchanged, with the possible exception of the pressure drop across the downcomer. However, the system pressure drop is predominated by the pressure drop across the fuel. The pressure drop changes in the downcomer are small compared to that of the fuel.

The presence of the piping also does not create a possible siphon path since the clearance between the 2" pipe and the 1-1/2" inlet pipe is sufficient to break any possible siphon (although this is not considered credible due to the lack of siphon path).

2. Natural Convection: The flow path remains unchanged for natural convection. However, using 2" piping will increase the total friction pressure and thus decrease the total natural convection flow. The effect of the reduced natural convection flow is shown in Figure 1. The safety limit coolant temperature reduces about 2 °C, or about 1.5 kW for the reactor power. Despite the change, there is still adequate margin to the Limiting Safety System Settings 20 kW and 60 °C

3. Corrosion Issues Welding of the pipes into the downcomer region will result in the possible creation of areas of stagnant water which could increase corrosion of the aluminum in these areas. This is to be reduced by drilling sixteen 3/8" holes in each baffle plate above the fuel region to allow water circulation. These holes (eight pairs on each plate) will be equally spaced along the length of the downcomer.

4. Other All welding materials and specifications will conform to ASME Pressure Vessel Code Section II and Section IX, as in the original manufacturing. In addition, a hydrostatic test under the same conditions as the original test will be performed upon the completion of all welding.

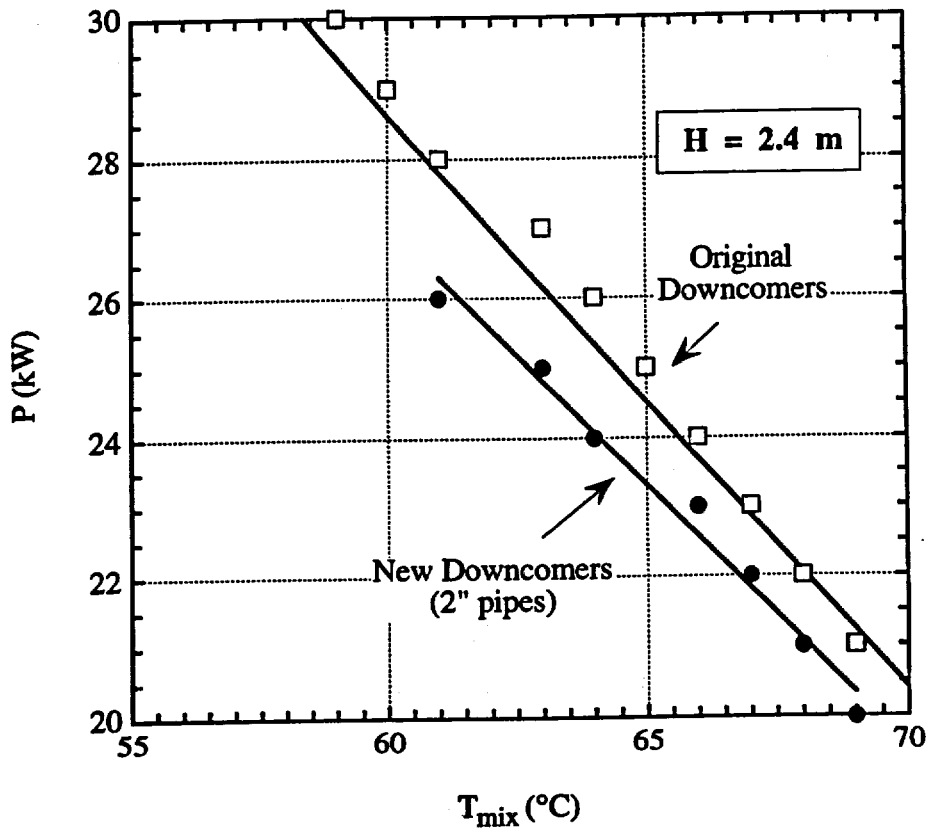

Figure 1 Comparison of Calculated Safety Limits for the Original Downcomer Design (De=11.9 cm) and the Modified Downcomer Design (De=5.08 cm)

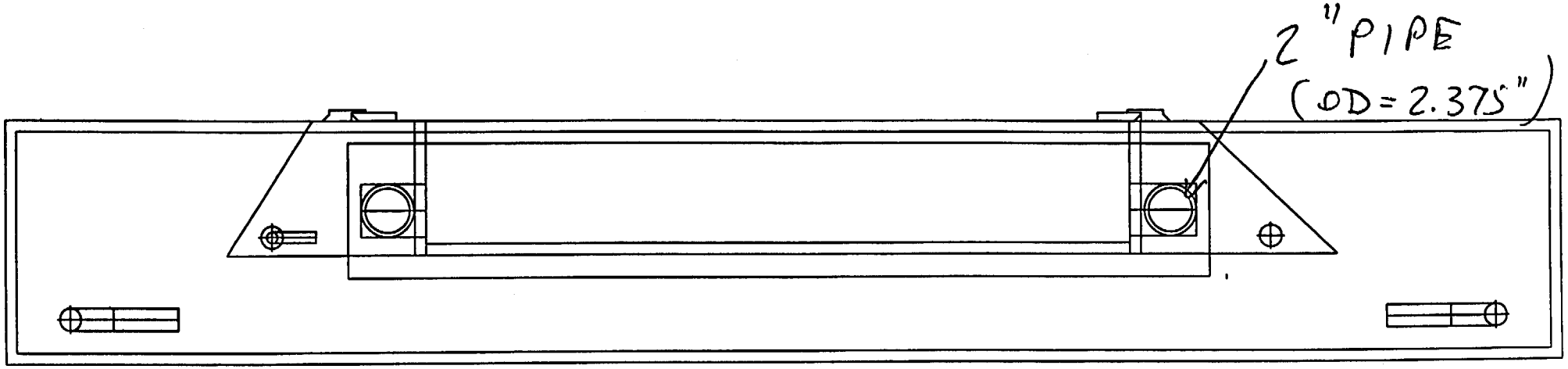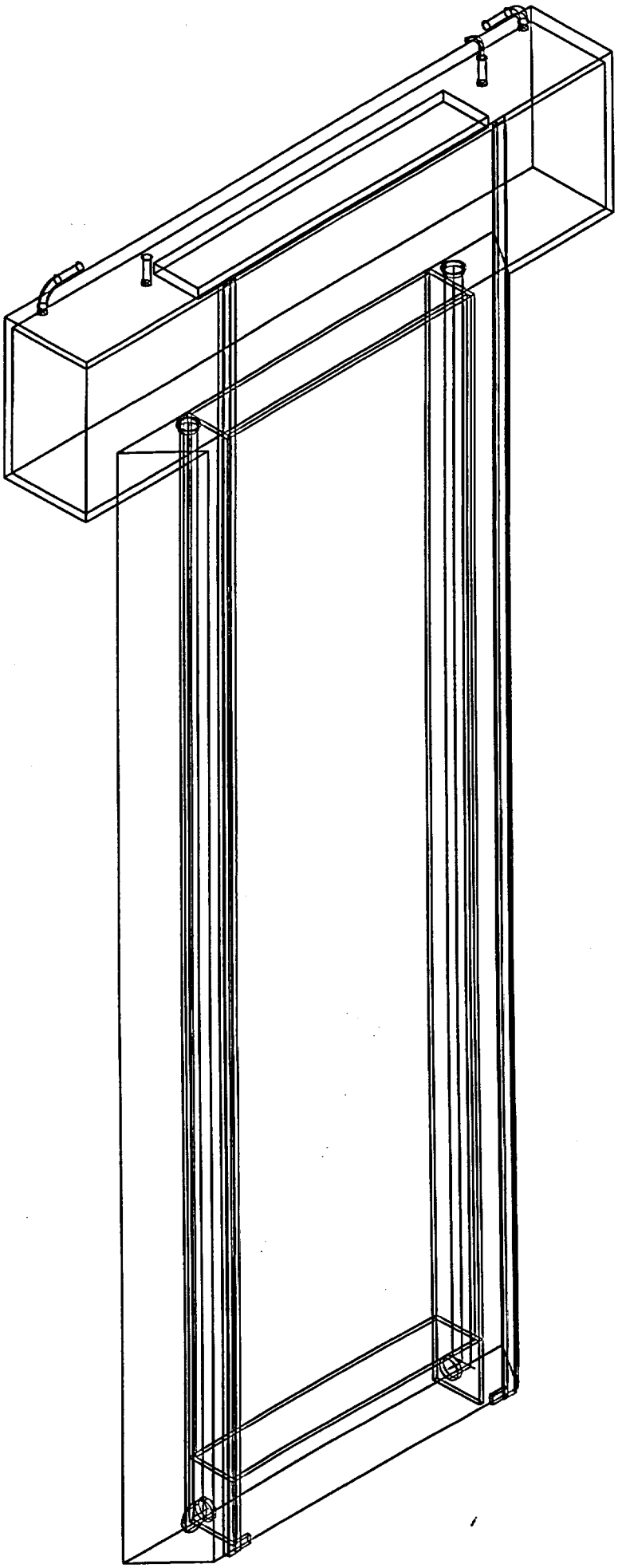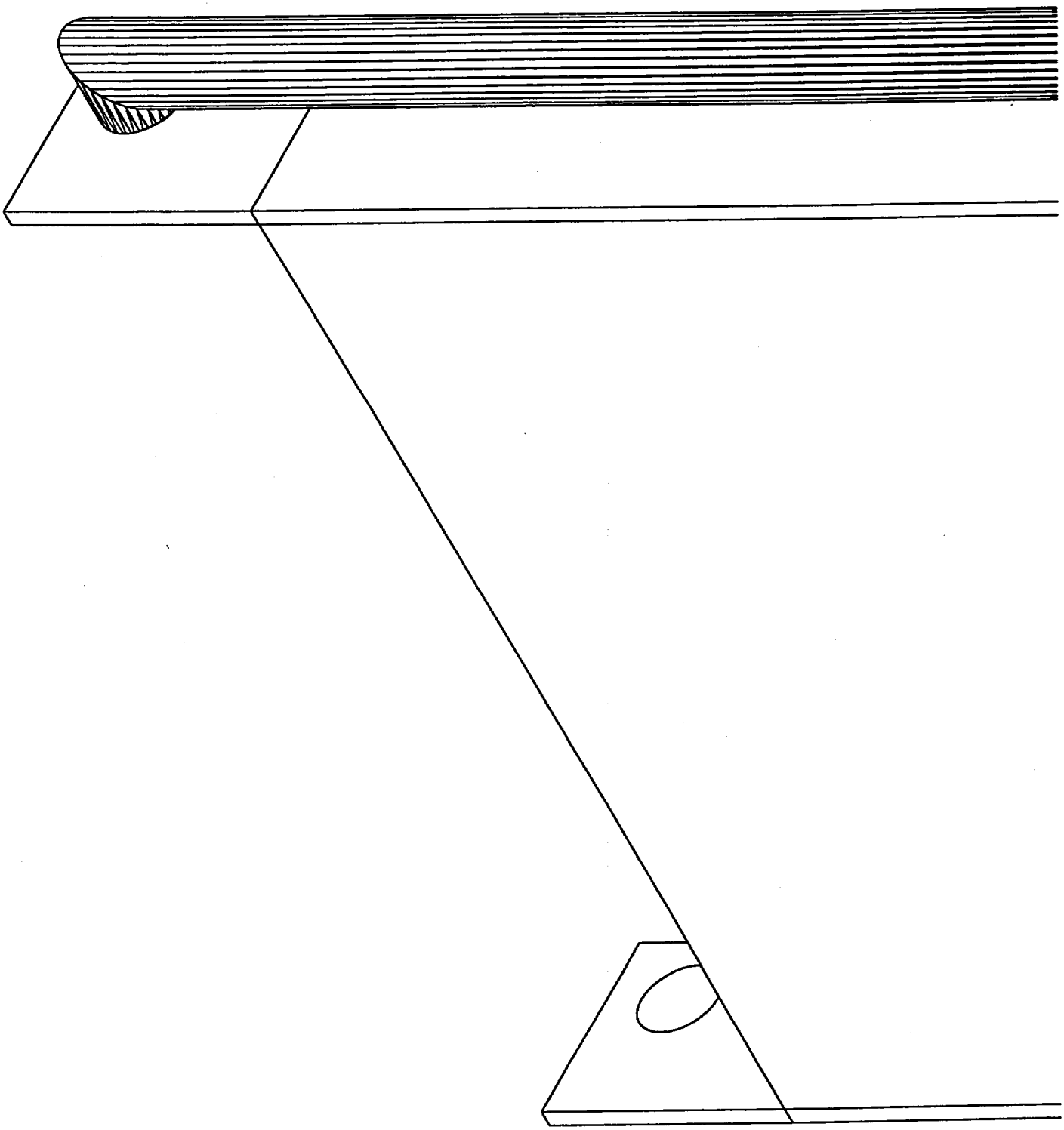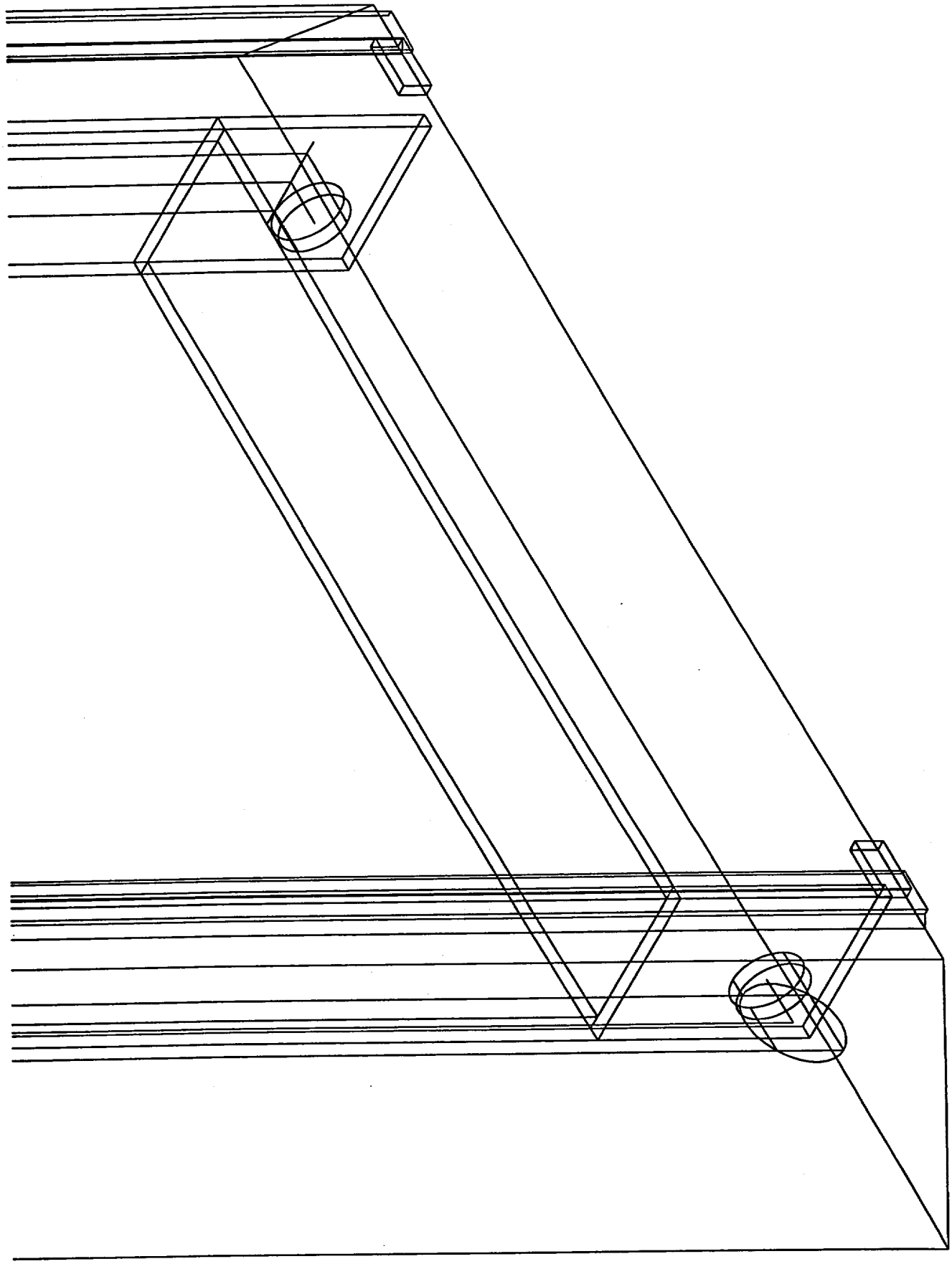
2" PIPE
(OD = 2.375")