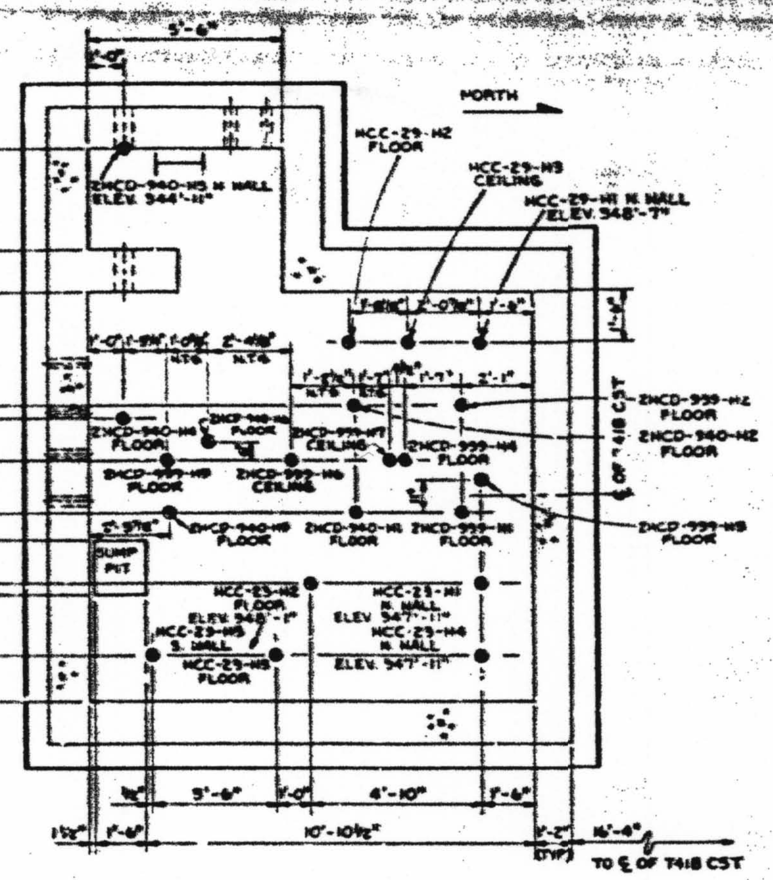

UNIT 1 VALVE PIT
SCALE: 3/8" = 1'-0"

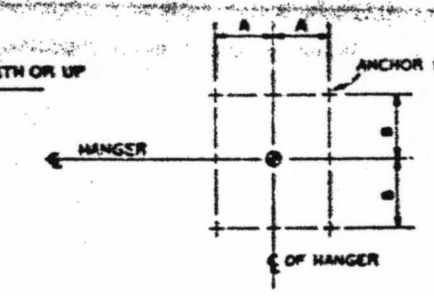

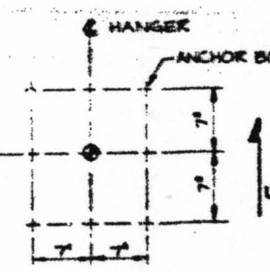

DETAIL D

UNIT 1 VALVE PIT ANCHOR BOLT LOCATIONS						
HANGER NO.	BOLT DIA.	A	B	MIN. BOLT PROJ.	MIN. BOLT EMBED	SUPPORTED FROM
HCC-23-H1	5/8"	6"	6"	2 1/2"	8"	N. WALL
HCC-23-H2	5/8"	4"	4"	1 7/8"	8"	FLOOR
HCC-23-H3	5/8"	4"	4"	2"	8"	FLOOR
HCC-23-H4	5/8"	6"	6"	2 1/2"	8"	N. WALL
HCC-23-H5	5/8"	SEE DET. D	SEE DET. D	2 1/2"	8"	S. WALL
2HCD-939-H7	1/2"	3 1/2"	3 1/2"	2 7/16"	5 1/2"	CEILING
2HCD-939-H6	1/2"	3 1/2"	3 1/2"	2 1/2"	5 1/2"	CEILING
2HCD-939-H5	1/2"	4"	4"	1 15/16"	5 1/2"	FLOOR
2HCD-939-H4	1/2"	4"	4"	2 3/16"	5 1/2"	FLOOR
2HCD-939-H3	1/2"	4"	4"	1 15/16"	5 1/2"	FLOOR
2HCD-939-H2	1/2"	3 1/2"	3 1/2"	2 1/8"	5 1/2"	FLOOR
2HCD-939-H1	1/2"	3 1/2"	3 1/2"	2"	5 1/2"	FLOOR
2HCD-940-H1	1/2"	3 1/2"	3 1/2"	2 7/16"	5 1/2"	FLOOR
2HCD-940-H2	1/2"	3 1/2"	3 1/2"	2 1/16"	5 1/2"	FLOOR
2HCD-940-H3	1/2"	4"	4"	2 7/16"	5 1/2"	FLOOR
2HCD-940-H4	1/2"	4"	4"	2"	5 1/2"	FLOOR
2HCD-940-H5	5/8"	5"	5"	2 1/2"	6 1/2"	N. WALL
HCC-29-H1	1/2"	3 1/2"	3 1/2"	2 1/2"	5 1/2"	N. WALL
HCC-29-H2	1/2"	3 1/2"	3 1/2"	3 3/4"	5 1/2"	FLOOR
HCC-29-H3	1/2"	3 1/2"	3 1/2"	2 1/2"	5 1/2"	CEILING
2HCD-940-H6	1/2"	4"	4"	2 1/16"	5 1/2"	FLOOR

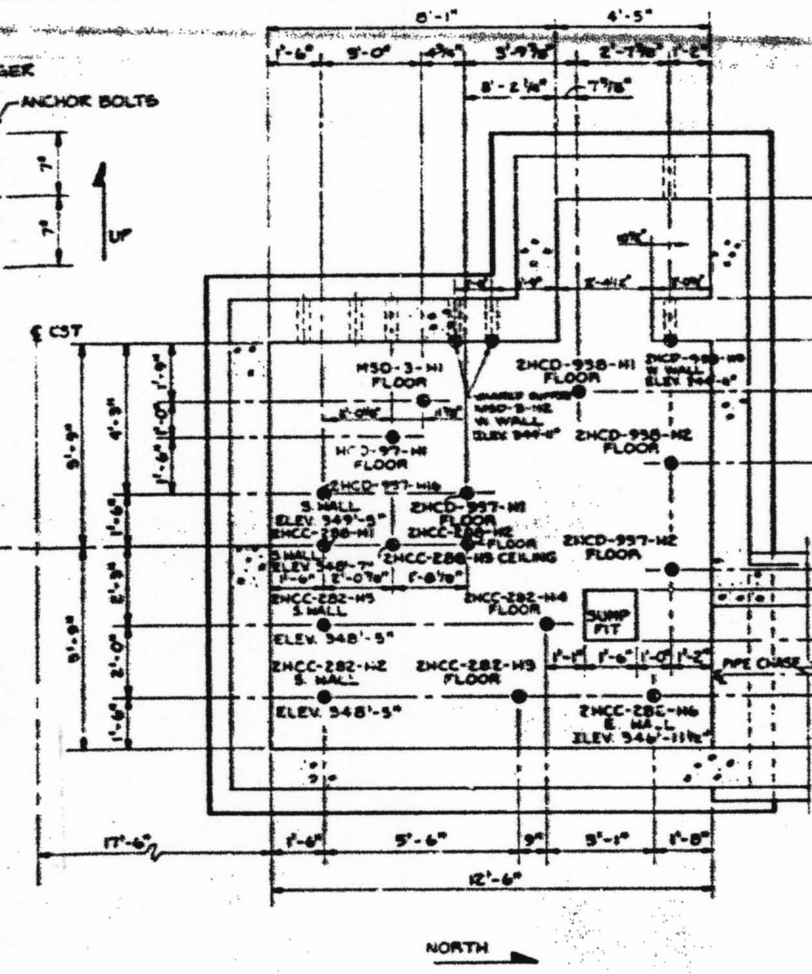

UNIT 2 VALVE PIT
SCALE: 3/8" = 1'-0"
(SEE SCHEDULE LOCATION B-3 BELOW)

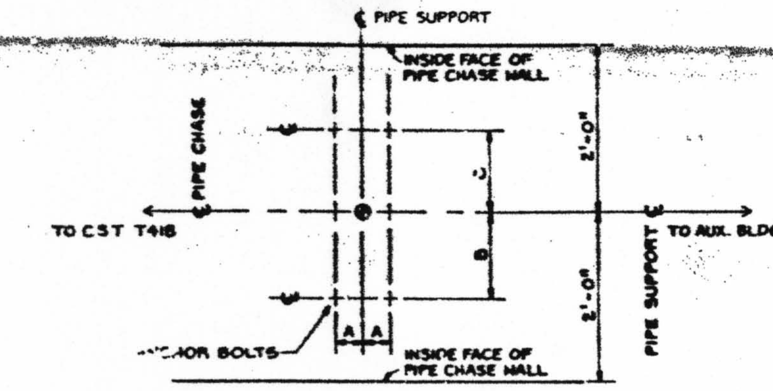

UNIT 2 PIPE CHASE ANCHOR BOLT LOCATIONS						
HANGER NO.	BOLT DIA.	A	B	C	MIN. BOLT PROJ.	MIN. BOLT EMBED
2HCC-282-H7	1/2"	4 1/2"	1'-3"	1'-6"	8 5/8"	5 1/2"
2HCC-282-H8	1/2"	4 1/2"	1'-3"	3"	7 1/2"	5 1/2"
2HCC-282-H5	1/2"	3 1/2"	1'-3"	1'-6"	5"	5 1/2"
2HCC-282-H11	1/2"	3 1/2"	1'-3"	3"	3 15/16"	5 1/2"
2HCC-282-H12	1/2"	3 1/2"	1'-3"	3"	3 15/16"	5 1/2"
2HCC-282-H13	1/2"	3 1/2"	1'-3"	1'-7"	3 15/16"	5 1/2"
2HCC-282-H14	1/2"	3 1/2"	1'-3"	3"	4 1/2"	5 1/2"
2HCC-282-H15	1/2"	3 1/2"	1'-3"	1'-6"	5 1/4"	5 1/2"
2HCC-282-H16	1/2"	4 1/2"	1'-3"	3"	7 1/4"	5 1/2"
2HCC-282-H17	1/2"	4 1/2"	1'-3"	1'-6"	6"	5 1/2"
2HCC-282-H18	1/2"	3 1/2"	1'-3"	3"	4 5/16"	5 1/2"
2HCC-282-H39	5/8"	4"	1'-3"	3"	4"	6 1/2"

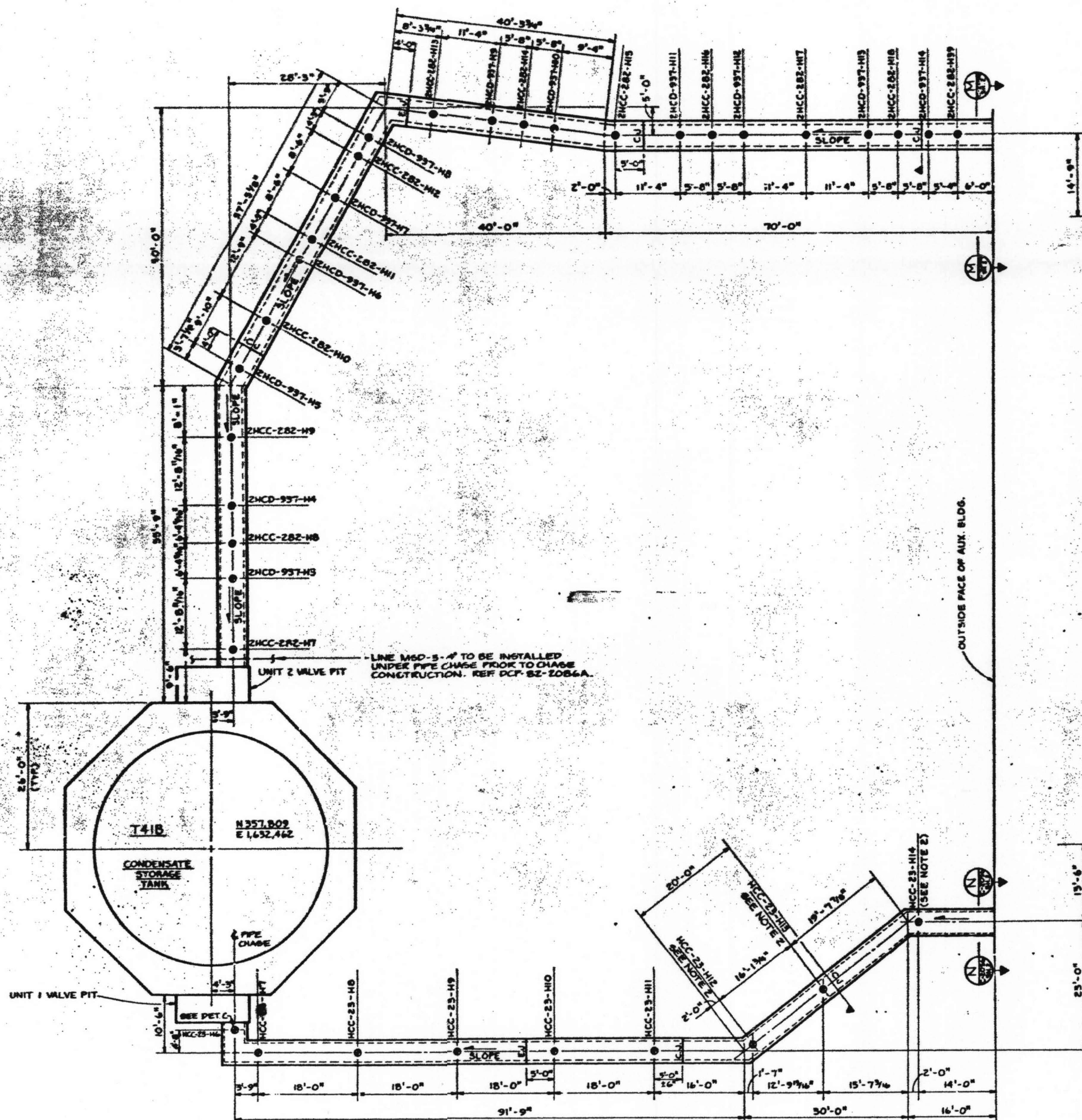

UNIT 1 & 2 PIPE CHASES
SCALE: 1" = 10'-0"

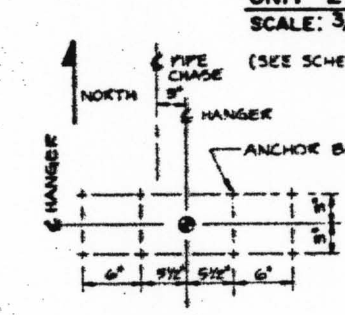

DETAIL C

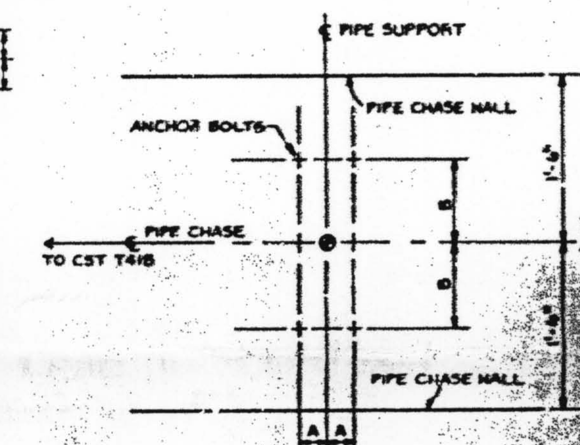

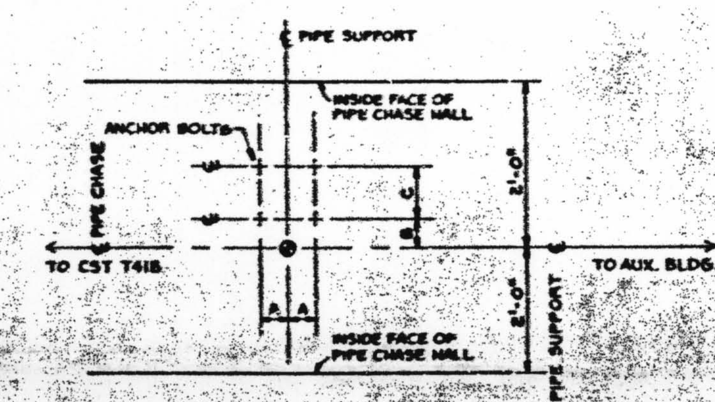

UNIT 1 PIPE CHASE ANCHOR BOLT LOCATIONS					
HANGER NO.	BOLT DIA.	A	B	MIN. BOLT PROJ.	MIN. BOLT EMBED.
HCC-23-H6	3/4"	SEE DET. C	SEE DET. C	6 7/8"	8"
HCC-23-H7	5/8"	3 1/2"	9"	6 1/2"	6 1/2"
HCC-23-H8	5/8"	3 1/2"	9"	4 7/8"	6 1/2"
HCC-23-H9	1/2"	3"	9"	5 1/4"	5 1/2"
HCC-23-H10	1/2"	3"	9"	4 5/8"	5 1/2"
HCC-23-H11	1/2"	3"	9"	3 7/8"	5 1/2"
HCC-23-H12	1/2"	3"	5 3/4" *	6 7/8"	5 1/2"
HCC-23-H13	1/2"	3"	9" *	5 7/8"	5 1/2"
HCC-23-H14	1/2"	3"	9" *	5 7/8"	5 1/2"

* SEE NOTE 2

UNIT 2 PIPE CHASE ANCHOR BOLT LOCATIONS						
HANGER NO.	BOLT DIA.	A	B	C	MIN. BOLT PROJ.	MIN. BOLT EMBED.
2HCD-937-H3	1/2"	4 1/2"	6"	1'-0"	7 1/2"	5 1/2"
2HCD-937-H4	1/2"	4 1/2"	6"	1'-0"	6 5/16"	5 1/2"
2HCD-937-H5	1/2"	3 1/2"	6"	1'-0"	4"	5 1/2"
2HCD-937-H6	1/2"	3 1/2"	6"	1'-0"	5 5/8"	5 1/2"
2HCD-937-H7	1/2"	3 1/2"	6"	1'-0"	3 7/8"	5 1/2"
2HCD-937-H8	1/2"	3 1/2"	6"	1'-0"	5 5/16"	5 1/2"
2HCD-937-H9	1/2"	3 1/2"	6"	1'-0"	5 3/4"	5 1/2"
2HCD-937-H10	1/2"	3 1/2"	6"	1'-0"	5 15/16"	5 1/2"
2HCD-937-H11	1/2"	4 1/2"	6"	1'-0"	7 5/16"	5 1/2"
2HCD-937-H12	1/2"	4 1/2"	6"	1'-0"	6 1/2"	5 1/2"
2HCD-937-H13	1/2"	3 1/2"	6"	1'-0"	4 9/16"	5 1/2"
2HCD-937-H14	1/2"	3 1/2"	6"	1'-0"	4 1/4"	5 1/2"

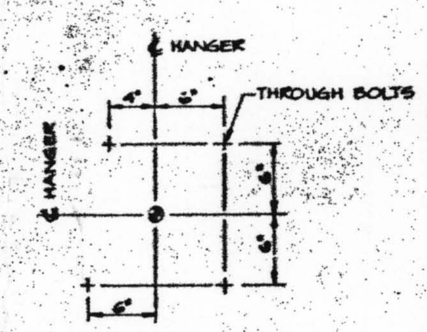

DETAIL A

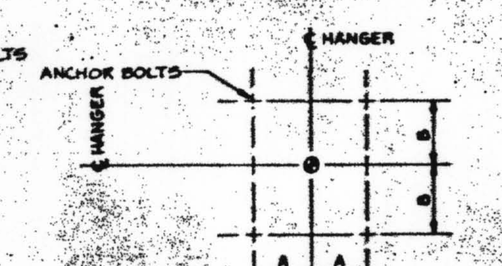

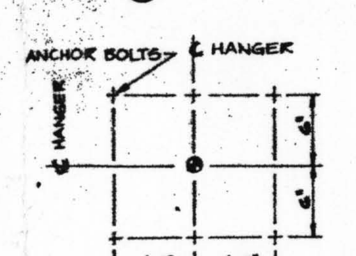

DETAIL B

UNIT 2 VALVE PIT ANCHOR BOLT LOCATIONS						
HANGER NO.	BOLT DIA.	A	B	MIN. BOLT PROJ.	MIN. BOLT EMBED.	SUPPORTED FROM
2HCD-937-H16	3/4"	8"	5"	2 7/8"	8"	S. WALL
2HCD-938-H1	5/8"	3 1/2"	3 1/2"	4 1/2"	6 1/2"	FLOOR
2HCD-938-H2	5/8"	3 1/2"	3 1/2"	4 5/8"	6 1/2"	FLOOR
2HCD-937-H1	5/8"	3 1/2"	3 1/2"	4 1/2"	6 1/2"	FLOOR
2HCD-937-H2	5/8"	3 1/2"	3 1/2"	4 1/2"	6 1/2"	FLOOR
2HCC-282-H2	3/4"	8"	5"	2 5/16"	8"	S. WALL
2HCC-282-H3	5/8"	3 1/2"	3 1/2"	4 1/2"	6 1/2"	FLOOR
2HCC-282-H4	5/8"	3 1/2"	3 1/2"	4 1/2"	6 1/2"	FLOOR
2HCC-282-H5	3/4"	8"	5"	3"	8"	S. WALL
2HCC-282-H6	3/4"	8"	5	2 3/4"	8"	E. WALL
MSD-3-H1	5/8"	3 1/2"	3 1/2"	4 1/2"	6 1/2"	FLOOR
HCD-97-H1	5/8"	3 1/2"	3 1/2"	4 1/2"	6 1/2"	FLOOR
2HCC-288-H1	1/2"	3 1/2"	3 1/2"	2 1/2"	5 1/2"	S. WALL
2HCC-288-H2	1/2"	3 1/2"	3 1/2"	4 1/2"	5 1/2"	FLOOR
2HCC-288-H3	1/2"	3 1/2"	3 1/2"	2 7/8"	5 1/2"	CEILING
MSD-3-H2	1" *	SEE DET. B	SEE DET. B	5 1/2"	10"	W. WALL
2HCD-938-H5	1 1/8" **	SEE DET. A	SEE DET. A	A36 THREADED RODS, BOLT THRU WALL.		W. WALL

* SEE NOTE 5
** SEE NOTE 6

NOTES:

1. ALL ANCHOR BOLTS SHALL BE ASTM A-325 AS SPECIFIED IN SPEC. APL-C-2404.
2. CENTERLINE OF HANGER HCC-23-H14 IS 4" SOUTH OF CENTERLINE OF PIPE CHASE, HCC-23-H13 AND HCC-23-H12 ARE 2'4 1/4" S.E. OF ℄ OF PIPE CHASE RESPECTFULLY.
3. SEE DWG. C-2056 SHT. 1 FOR GENERAL NOTES.
4. UNIT 1 & 2 PIPE CHASES CONSTRUCTED TO LOCATION INDICATED UNDER THIS CONTRACT. PROVIDE CONSTRUCTION JOINT PER DETAIL 8/C-2234. REINFORCING STEEL SHALL BE WRAPPED W/ TAPE AND GREASED, WHERE NOTED.
5. PROVIDE 6-1"Ø A-325 ANCHOR BOLTS AT HANGER MSD-3-H2.
6. PROVIDE 4-1 1/8"Ø A-36 THREADED RODS AT HANGER 2HCD-938-H5 BOLT THROUGH WALL. (LENGTH = 1'-8" MIN.)

REFERENCE DRAWINGS:

C-2056 SH. 1 PLAN AND SECTIONS.
C-2056 SH. 2 PLAN AND SECTIONS.
C-2026A SH. 14 UNDERGROUND UTILITIES.
C-2026A SH. 19 UNDERGROUND UTILITIES.

D-2

NO.	DATE	REVISION	BY	CH'K	ENGR	SUPVR
0	9/23/87	ISSUED AS-BUILT: DCP 82-2086	CVP	KS	SS	KD

SCALE: NONE | DESIGN: D. BAUMAN | DRAWN: L. BUNTING

ARKANSAS POWER AND LIGHT COMPANY
ARKANSAS NUCLEAR ONE
UNIT 1 & 2

ANCHOR BOLT LOCATIONS
T41B CONDENSATE STORAGE TANK

DRAWING NO. C-2056 SHEET 3 OF 3 | REV. 0