Northeast
Nuclear Energy

Rope Ferry Rd. (Route 156), Waterford, CT 06385

Millstone Nuclear Power Station
Northeast Nuclear Energy Company
P.O. Box 128
Waterford, CT 06385-0128
(860) 447-1791
Fax (860) 444-4277

The Northeast Utilities System

AUG 25 2000

Docket Nos. 50-336
50-423
B18199

Re: 10 CFR 50.90

U.S. Nuclear Regulatory Commission
Attention: Document Control Desk
Washington, DC 20555

Millstone Nuclear Power Station, Unit Nos. 2 and 3
License Amendment Request
Proposed Revisions to Final Safety Analysis Reports
4160 Volt Cross-Tie of MP3 to MP2

Introduction

Millstone Unit No. 1 (MP1) is being decommissioned. To support this activity, several modifications are required to modify/eliminate MP1 systems that support the operation of structures, systems, and components that are shared or common to Millstone Unit No. 2 (MP2) and Millstone Unit No. 3 (MP3). One of the separation projects entails the replacement of the existing MP1 to MP2 4160 Volt cross-tie with a new MP3 to MP2 4160 Volt cross-tie. Northeast Nuclear Energy Company (NNECO) has evaluated this proposed new cross-tie utilizing the criteria of 10 CFR 50.59. While the modification is safe, the modification involves four unreviewed safety questions (USQs). One USQ pertains to MP2 and three USQs pertain to MP3. Therefore, in accordance with 10 CFR 50.59(c), NNECO requests the Nuclear Regulatory Commission (NRC) review and approve the USQs, presented herein as changes to the MP2 FSAR (Attachment 3) and the MP3 FSAR (Attachment 4), through amendments to Operating Licenses DPR-65 and NPF-49 for Millstone Unit Nos. 2 and 3, respectively, pursuant to 10 CFR 50.90.

A separate license amendment request was submitted on August 25, 2000,[1] to extend the allowed outage time for Action a.2 of MP2 Technical Specification (TS) 3.8.1.1, "Electrical Power Systems - A. C. Sources - Operating," from the existing limit of 72 hours to 14 days. This is a one time change to support the replacement of the MP1 to MP2 4160 Volt cross-tie with a MP3 to MP2 4160 Volt cross-tie.

---

[1] R. P. Necci letter to the NRC, "Millstone Nuclear Power Station, Unit No. 2 Technical Specifications Change Request 2-15-00, One Time Allowed Outage Time Extension for Action a.2 of TS 3.8.1.1," dated August 25, 2000.

A001

Attachment 1 provides a discussion of the proposed changes and the Safety Summary. Attachment 2 provides the Significant Hazards Consideration. Attachment 3 provides the marked-up version of the MP2 FSAR. Attachment 4 provides the marked-up version of the MP3 FSAR.

Environmental Considerations

NNECO has reviewed the proposed license amendment request against the criteria of 10 CFR 51.22 for environmental considerations. The proposed changes involve the replacement of the existing MP1 to MP2 4160 Volt cross-tie with a new MP3 to MP2 4160 Volt cross-tie. These changes do not result in a significant increase in the type and amounts of effluents that may be released off site. In addition, this amendment request will not significantly increase individual or cumulative occupational radiation exposures. Therefore, NNECO has determined the proposed changes will not have a significant effect on the quality of the human environment.

Unreviewed Safety Questions

The proposed changes were evaluated utilizing the criteria of 10 CFR 50.59. This evaluation has determined that the proposed changes involve four USQs. The four USQs are summarized below. The first USQ pertains to MP2 and the remaining three USQs pertain to MP3. These four USQs are associated with the change to the new shared electrical design addressing the requirements of 10 CFR 50, Appendix A, General Design Criteria (GDC) 5 and GDC 17 for MP2 and MP3.

MP2 USQ 1

A test will be performed to demonstrate the new MP3 to MP2 cross-tie connection integrity, and verify load carrying capacity. This test will utilize a temporary overcurrent protection scheme while the non-Class 1E MP3 Station Blackout (SBO) Diesel Generator (DG) is paralleled to the Class 1E MP2 4160 Volt system. This off-normal electrical configuration, and its reliance on a special overcurrent scheme to assure 4160 Volt system operability, creates the potential for a malfunction of a different type.

MP3 USQ 1

The MP3 to MP2 4160 Volt cross-tie will impose up to an additional 3 MVA load on MP3. As a result, the margin between the minimum switchyard voltage (345 kV) and the minimum acceptable switchyard voltage (increases from 334 kV to 337 kV) has been reduced from 11 kV to 8 kV. This is a reduction in the operational margin that was stated in a previous NRC Safety Evaluation Report for MP3.

MP3 USQ 2

To utilize the MP3 normal station service transformer (NSST) as an alternate source of AC power for MP2, breaker 13T and its associated disconnect switches will have to be maintained opened. In the event that MP3 was utilizing the MP3 NSST as the sole offsite AC power source when shut down, opening breaker 13T increases the probability that MP3 could lose offsite power. As a result, opening the 13T breaker will increase the probability of a malfunction of equipment important to safety.

MP3 USQ 3

The connection of an additional 3 MVA load onto the MP3 electrical distribution system, when a very specific set of plant conditions exist at MP3, will increase the short circuit fault levels on the MP3 electrical distribution system. The additional contribution from the MP2 loads could increase the fault level to above the switchgear ratings if a fault occurs when MP3 is supplying power to MP2. As a result, the addition of 3 MVA load to the MP3 station service transformers (NSST and RSST) will increase the probability of a malfunction of equipment important to safety.

Conclusions

The proposed activities do not involve a significant impact on public health and safety (see the Safety Summary provided in Attachment 1) and do not involve a Significant Hazards Consideration pursuant to the provisions of 10 CFR 50.92 (see the Significant Hazards Consideration provided in Attachment 2). Therefore, in accordance with 10 CFR 50.59(c), NNECO requests the NRC review and approve the USQs, presented herein as changes to the MP2 FSAR (Attachment 3) and the MP3 FSAR (Attachment 4) through amendments to Operating Licenses DPR-65 and NPF-49 for Millstone Unit Nos. 2 and 3, respectively, pursuant to 10 CFR 50.90.

Plant Operations Review Committee and Nuclear Safety Assessment Board

The Plant Operations Review Committee and Nuclear Safety Assessment Board have reviewed and concurred with the determinations.

Schedule

We request issuance at your earliest convenience, with the amendment to be implemented within 60 days of issuance. In addition, this license amendment request needs to be approved coincident with another license amendment request submitted on August 25, 2000. In that license amendment request, NNECO requested a one time extension to the allowed outage time for Action a.2 of MP2 TS 3.8.1.1. This one time extension is required to support the replacement of the MP1 to MP2 4160 Volt cross-tie with a MP3 to MP2 4160 Volt cross-tie.

State Notification

In accordance with 10 CFR 50.91(b), a copy of this License Amendment Request is being provided to the State of Connecticut.

There are no regulatory commitments contained in this letter.

If you should have any questions on the above, please contact Mr. Ravi Joshi at (860) 440-2080.

Very truly yours,

NORTHEAST NUCLEAR ENERGY COMPANY

Raymond P. Necci
Vice President - Nuclear Technical Services

Sworn to and subscribed before me

this 25th day of August, 2000

Notary Public

My Commission expires SANDRA J. ANTON
NOTARY PUBLIC
COMMISSION EXPIRES
MAY 31, 2005

Attachments (4)

cc: H. J. Miller, Region I Administrator
J. I. Zimmerman, NRC Project Manager, Millstone Unit No. 2
S. R. Jones, Senior Resident Inspector, Millstone Unit No. 2
V. Nerses, NRC Senior Project Manager, Millstone Unit No. 3
A. C. Cerne, Senior Resident Inspector, Millstone Unit No. 3

Director
Bureau of Air Management
Monitoring and Radiation Division
Department of Environmental Protection
79 Elm Street
Hartford, CT 06106-5127

Docket Nos. 50-336
50-423
B18199

Attachment 1

Millstone Nuclear Power Station, Unit Nos. 2 and 3

License Amendment Request
Proposed Revisions to Final Safety Analysis Reports
4160 Volt Cross-Tie of MP3 to MP2
Discussion of Proposed Changes and Safety Summary

License Amendment Request
4160 Volt Cross-Tie of MP3 to MP2
Discussion of Proposed Changes and Safety Summary

Introduction

Millstone Unit No. 1 (MP1) is being decommissioned. To support this activity, several modifications are required to modify/eliminate MP1 systems that support the operation of structures, systems, and components that are shared or common to Millstone Unit No. 2 (MP2) and Millstone Unit No. 3 (MP3). One of the separation projects entails the replacement of the existing MP1 to MP2 4160 Volt cross-tie with a new MP3 to MP2 4160 Volt cross-tie. Northeast Nuclear Energy Company (NNECO) has evaluated this proposed new cross-tie utilizing the criteria of 10 CFR 50.59. While the modification is safe, the modification involves four unreviewed safety questions (USQs). One USQ pertains to MP2 and three USQs pertain to MP3. Therefore, in accordance with 10 CFR 50.59(c), NNECO requests the Nuclear Regulatory Commission (NRC) review and approve the USQs, presented herein as changes to the MP2 FSAR (Attachment 3) and the MP3 FSAR (Attachment 4), through amendments to Operating Licenses DPR-65 and NPF-49 for Millstone Unit Nos. 2 and 3, respectively, pursuant to 10 CFR 50.90.

Description of Proposed Changes

Current Design

The current MP1 to MP2 4160V cross-tie design satisfies the 10 CFR 50, Appendix A, General Design Criteria (GDC) 17, "Electric Power Systems," requirement for an alternate source of offsite power by providing power from either the MP1 Reserve Station Service Transformer (RSST) or the MP1 Normal Station Service Transformer (NSST). This design also provides a source of onsite AC power for post-fire (10 CFR 50, Appendix R) safe and cold shutdown from the MP1 Emergency Diesel Generator (EDG), and a source of alternate AC power for station blackout (10 CFR 50.63) from the MP1 EDG. Refer to Figure 1, located at the end of this attachment, for an illustration of the current design.

GDC 17 describes the requirements related to onsite and offsite power systems. The offsite power system must be available via two separate and electrically independent connections to the onsite electrical distribution system. One offsite circuit must be immediately available to mitigate the effects of design basis accident conditions. The MP2 RSST provides this source of power for MP2. The other offsite circuit must be available in sufficient time to assure an orderly shutdown and cooldown without any requirement to postulate a design basis accident condition. The MP1 RSST or MP1 NSST (back-feed from the Main Step-Up Transformer) connected through MP1 bus 14H and MP2 bus 24E presently provides the other source of offsite power. Electrical independence of these two MP2 offsite sources is afforded by the MP2 RSST connection to the "North" bus of the switchyard, and the MP1 RSST or NSST

connection, both of which are two circuit breakers removed from the MP2 RSST switchyard connection (breakers 1T/2T or 4T/5T, respectively).

MP2 does not have an independent power source to mitigate a loss of offsite and onsite power, a "Station Blackout." MP2 relies on the MP1 EDG which is a Class 1E source, made available to MP2 by cross-tying electrical busses 14H and 24E. This alternate AC (AAC) power source is used to satisfy the requirements of 10 CFR 50.63 "Station Blackout Rule."

This AAC power source is also used to satisfy the requirements of 10 CFR 50, Appendix R, "Fire Protection Program." 10 CFR 50, Appendix R, Section III.G.3 requires that an alternate or dedicated shutdown means be provided where fire protection of the safety systems for hot shutdown does not satisfy the requirements of Appendix R, Section III.G.2. MP2 does not meet the requirements of Section III.G.2 for fire areas R-1, R-11, and R-16. The current fire shutdown strategy for these fire areas credits the cross-tie to the MP1 emergency bus via non-safety related bus 14H. This cross-tie has the capability to supply power from the MP1 EDG through MP1 bus 14H to MP2 bus 24E to power the necessary safe shutdown equipment at MP2.

The MP2 electrical load requirements to meet each of these requirements varies. The largest load requirement is the alignment to the second offsite source per GDC 17, which requires approximately 3 MVA. For Appendix R , the load requirement is less than 2.3 MVA, for a maximum duration of 72 hours. The load requirement for a station blackout at MP2 is less than 1.3 MVA, for a maximum duration of 8 hours.

New Design

The new design entails the replacement of the existing MP1 to MP2 4160V cross-tie connection with a new MP3 to MP2 4160V cross-tie connection. The new connection will provide power from MP3 bus 34A or 34B to MP2 bus 24E. Refer to Figure 2, located at the end of this attachment, for an illustration of the new design. This new design will meet the GDC 17 requirement for an alternate source of offsite power by providing power from either the MP3 RSST or the MP3 NSST. The new design will also provide a source of onsite AC power to meet the post-fire Appendix R alternate or dedicated shutdown requirement and an alternate source of AC power for station blackout by utilizing the MP3 Station Blackout Diesel Generator (SBO DG) to supply power to MP2 via bus 24E.

The new design was evaluated utilizing the criteria of 10 CFR 50.59. This evaluation has determined that four aspects of the new design and associated implementation involve USQs. The four USQs are summarized below. The first USQ pertains to MP2 and the remaining three USQs pertain to MP3. These four USQs are associated with the change to the new shared electrical design addressing the requirements of GDC 5, "Sharing of Structures, Systems, and Components," and GDC 17 for MP2 and MP3.

MP2 USQ 1

A test will be performed to demonstrate the new MP3 to MP2 cross-tie connection integrity, and verify load carrying capacity. This test will utilize a temporary overcurrent protection scheme while the non-Class 1E MP3 SBO DG is paralleled to the Class 1E MP2 4160 Volt system. This off-normal electrical configuration, and its reliance on a special overcurrent scheme to assure 4160 Volt system operability, creates the potential for a malfunction of a different type.

MP3 USQ 1

The MP3 to MP2 4160 Volt cross-tie will impose up to an additional 3 MVA load on MP3. As a result, the margin between the minimum switchyard voltage (345 kV) and the minimum acceptable switchyard voltage (increases from 334 kV to 337 kV) has been reduced from 11 kV to 8 kV. This is a reduction in the operational margin that was stated in a previous NRC Safety Evaluation Report for MP3.

MP3 USQ 2

To utilize the MP3 NSST as an alternate source of AC power for MP2, breaker 13T and its associated disconnect switches will have to be maintained opened. In the event that MP3 was utilizing the MP3 NSST as the sole offsite AC power source when shut down, opening breaker 13T increases the probability that MP3 could lose offsite power. As a result, opening the 13T breaker will increase the probability of a malfunction of equipment important to safety.

MP3 USQ 3

The connection of an additional 3 MVA load onto the MP3 electrical distribution system, when a very specific set of plant conditions exist at MP3, will increase the short circuit fault levels on the MP3 electrical distribution system. The additional contribution from the MP2 loads could increase the fault level to above the switchgear ratings if a fault occurs when MP3 is supplying power to MP2. As a result, the addition of 3 MVA load to the MP3 station service transformers (NSST and RSST) will increase the probability of a malfunction of equipment important to safety.

Prior to implementing the modification, NRC approval of the activities associated with the four USQs is required in accordance with 10 CFR 50.59(c). NNECO is requesting the NRC review and approve the items identified as USQs by authorizing the implementation of the MP2 and MP3 FSAR changes contained in Attachments 3 and 4, respectively. These FSAR changes reflect the new electrical design to supply power from MP3 to MP2.

Safety Summary

MP2 USQ 1

A test will be performed to verify the ability of the cross-tie to supply approximately 3 MVA of power from MP3 to MP2. The MP3 SBO DG will be used to supply this load in a controlled manner. Normally, if the MP3 SBO DG is required to supply power to MP2 in response to a station blackout event or a fire at MP2, the 4160 Volt busses at MP2 will be initially deenergized. However, the test to verify this new electrical circuit is expected to be performed while MP2 is operating. Therefore, this test will require parallel operation of the MP3 SBO DG with the MP2 4160 Volt system. This represents an off-normal electrical configuration for MP2.

The configuration that will be required for this test is very similar to the configuration that exists when an MP2 EDG is paralleled to its respective bus during a monthly surveillance test. The major difference between the two configurations is that the MP3 SBO DG and its connection path are non-Class 1E. Thus, the protective relays associated with the MP3 SBO DG cannot be credited to provide adequate isolation during a design basis event. To provide a Class 1E electrical isolation scheme for the test, the MP2 bus 24E breaker to the MP3 supply (breaker A505) will be temporarily modified to perform this test. The existing MP2 overcurrent relays for this breaker only have inverse-time-overcurrent capability. These relays will be replaced with Class 1E relays that have both inverse-time and instantaneous overcurrent capability. While the MP3 SBO DG is paralleled with the MP2 4160 Volt system, the replacement Class 1E overcurrent relay will provide instantaneous isolation (open Bus 24E breaker A505) for any condition during which the MP3 SBO DG may attempt to provide additional power (such as a large motor start or loss of normal power), or for any fault or overload condition experienced while connected to the non-Class 1E supply (MP3 SBO DG).

The off-normal electrical configuration required to perform the test, and the reliance on a special overcurrent scheme to assure MP2 4160 Volt system operability creates the possibility of a different malfunction than previously analyzed. However, the special Class 1E instantaneous overcurrent relaying scheme will ensure isolation of the MP3 SBO DG and associated cable connection should any abnormal event or failure occur at MP2. This will provide additional assurance that if a fault occurs in the MP3 SBO DG or the associated cross-tie cabling, it will be isolated immediately and should not affect operability of the MP2 safety related 4160 Volt system. In addition, if a loss of normal power occurs at MP2 during the test, the undervoltage condition will be detected by the credited undervoltage scheme, and MP2 will respond as designed to the loss of power. Therefore, performance of this test is safe.

MP3 USQ 1

Generic Letter (GL) 79-36, "Adequacy of Station Electric Distribution System Voltages," dated August 8, 1979, required a licensee to determine analytically whether the offsite power system and the onsite distribution system have sufficient capacity and capability to operate all required safety loads within their required voltage ratings in the event of an anticipated transient such as a unit trip, or an accident such as a loss of coolant accident (LOCA). The NRC issued a Safety Evaluation Report (SER), dated April 19, 1983,[1] that addressed compliance of the MP1 to MP2 cross-tie with GL 79-36. The SER stated that a minimum switchyard voltage of 342 kV was necessary to maintain adequate voltage for the condition where the MP1 RSST is supplying normal plus LOCA loads to MP1 while also supplying 3 MVA of safe shutdown load to MP2. The 3 MVA load bounds long term post-LOCA MP2 loads as well as the safe shutdown through cold shutdown loading for MP2 non-LOCA loss of normal power events.

The current minimum switchyard voltage requirement for MP3 is 334 kV as stated in Supplement 4 to NUREG-1031, Safety Evaluation Report related to the operation of MP3.[2] The SER states:

> "In a letter dated November 12, 1985, the applicant explained that the grid voltage at the Millstone switchyard is nominally held at 357 kV. If the voltage drops below this value, corrective action is taken to restore it. The minimum voltage that would be seen at the switchyard under these circumstances would be 345 kV. This is much higher than the minimum voltage (334 kV) necessary to maintain adequate safety bus voltage levels when operating on the reserve station service transformer."

The MP3 to MP2 4160 Volt cross-tie will impose up to an additional 3 MVA load on MP3. As a result, the minimum acceptable switchyard voltage for MP3 will increase from 334 kV to 337 kV. The margin between the minimum switchyard voltage (345 kV) and the minimum acceptable switchyard voltage will decrease from 11 kV to 8 kV. This is an improvement for MP2 (342 kV to 337 kV). However, it is a reduction in the operating margin for MP3.

The analysis performed to support the new design shows that, with a minimum voltage of 337 kV in the switchyard, MP3 will remain connected to offsite power. The minimum voltage protection assures that acceptable starting and running voltages are present for the safety systems that may be required to operate should a LOCA (limiting design basis event) occur at MP3 while MP2 is being supplied with the safe shutdown load of 3 MVA from either the MP3 RSST or the MP3 NSST. Thus, the MP3 offsite connection

---

(1) D. M. Crutchfield letter from the NRC, "Adequacy of Station Electric Distribution System Voltages, Millstone Nuclear Power Station, Units 1 and 2," dated April 19, 1983.

(2) B. J. Youngblood letter from the NRC, "Issuance of Supplement No. 4 to NUREG-1031 - Millstone Nuclear Power Station, Unit No. 3," dated December 6, 1985.

will not be tripped when offsite power is available. Therefore, the reduction in operating margin for MP3 is safe.

MP3 USQ 2

The proposed design change will allow the MP3 RSST (or the MP3 NSST, if the MP3 RSST is unavailable) to provide the alternate offsite source for MP2 to meet GDC 17 requirements. At the 345 kV switchyard, the MP3 RSST is connected to the "South" bus and is three circuit breakers away from the MP2 RSST "North" bus connection. During MP3 refueling outages, it is expected that the MP3 RSST will be removed from service to perform required maintenance. If the MP3 RSST is not available, MP2 will need to credit the MP3 NSST as the second offsite power supply for GDC 17 compliance. The connection for the MP3 NSST is between breakers 13T and 14T. This connection point only provides 1 breaker separation (13T) between the MP2 RSST and the MP3 NSST. If breaker 13T is closed, this arrangement does not provide adequate separation between the two offsite sources as required by GDC 17. A failure of the 13T breaker, or a fault in the offsite power supply with a failure of the 13T breaker to trip, could cause a simultaneous loss of both MP2 offsite circuits. To prevent this, breaker 13T must be opened when the MP3 RSST is taken out of service to restore the required separation between the two MP2 offsite sources. If breaker 13T is not opened, MP2 will not be able to credit the MP3 NSST as the second offsite source. This will require MP2 to enter the action requirements contained in Technical Specification 3.8.1.1 (restore two separate and independent offsite power sources within 72 hours or shut down MP2).

Opening breaker 13T when MP3 is shut down represents a degradation in the reliability of the offsite supply for MP3. A failure such as a fault on the 345 kV line that connects between breakers 14T and 15T (348 Southington line circuit) would cause a loss of offsite power for MP3 if breaker 13T is open. If breaker 13T is closed and a fault occurs in the 345 kV line, the MP3 NSST would remain energized by the "North" bus. Therefore, opening the 13T breaker to allow MP2 to meet GDC 17 requirements increases the probability of a loss of offsite power at MP3 when shut down. This increases the probability of a malfunction of equipment important to safety at Unit 3.

A loss of offsite power at MP3 due to a fault in the offsite distribution network is a low probability event. When combined with the expected frequency of removing the MP3 RSST from service of once per MP3 refueling outage, the probability of a loss of offsite power at MP3 when shut down as a result of breaker 13T being open is low. In addition, the MP3 shutdown risk program will evaluate the impact of removing the MP3 RSST from service, and plan accordingly. This will ensure the MP3 RSST will be removed from service when the shutdown risk is determined to be acceptably low. If the MP3 RSST must be removed from service, and plant conditions do not support opening breaker 13T, it will be necessary for MP2 to enter the action requirements of Technical Specification 3.8.1.1 for one inoperable offsite circuit. This will require restoration of the inoperable offsite circuit within 72 hours, or MP2 will be required to

shut down. Therefore, operation of MP3 with 13T open to allow MP2 compliance with GDC 17 requirements is safe.

MP3 USQ 3

The connection of an additional 3 MVA load for MP2 onto the MP3 electrical distribution system will increase the short circuit fault levels on the MP3 electrical distribution system. This additional load is comprised mostly of induction motors which contribute to the fault current.

The worst case short circuit conditions occur with MP3 at full power, the switchyard at its maximum voltage, and an MP3 EDG paralleled to the bus for surveillance testing. A short circuit under these conditions utilizes 100% of the MP3 switchgear and circuit breaker ratings. The additional contribution from the MP2 loads will increase the fault level to above the switchgear ratings if a worst case fault occurs. Therefore, this will increase the probability of a malfunction of equipment important to safety.

Although the fault levels could exceed the MP3 switchgear and circuit breaker ratings, it is not expected that the worst case conditions will be frequently established. For the majority of scenarios, this situation can be avoided because the new design allows the 3 MVA of power for MP2 to be supplied by either MP3 bus 34A or 34B. Procedural guidance will be provided to select the MP3 bus (34A or 34B) to supply power to MP2 that powers the opposite train from the train associated with the MP3 EDG to be tested. Even if the worst case plant configuration cannot be avoided, there is a low probability of event occurrence given the low probability of a bus fault coincident with the short time that the MP3 EDG would be paralleled to the system. In addition, the event would only affect one MP3 train of safety related equipment. The other train will be available to function as assumed to mitigate any accidents that may occur. Therefore, operation of MP3 while supplying 3 MVA of power to MP2 is safe.

Conclusion

The replacement of the MP1 to MP2 4160 Volt cross-tie connection with a MP3 to MP2 4160 Volt cross-tie connection is safe. The connection improves MP2 system voltage stability and offsite source availability. Independence of the MP2 offsite circuits will be maintained after the installation. In addition, the extra loading imposed by the MP2 safe shutdown loads on the MP3 power supplies is within the MP3 capability to simultaneously supply the worst case MP3 normal and accident loads. Therefore, the ability of MP3 to mitigate design basis accidents and events is not adversely affected by the new design.

The new cross-tie will improve MP2 ability to mitigate the consequences of a station blackout scenario, as compared to the original dependence on MP1 alternate AC power. The reliability of the MP2 cross-tie will increase with the shift from the MP1 EDG to the MP3 SBO DG. Although the MP1 EDG has a lower failure probability when compared to the MP3 SBO DG, it also requires more support systems such as service

water and ventilation. The failure probability of service water to the MP1 EDG and the failure probability of the EDG ventilation brings the overall reliability of the MP1 EDG below that of the MP3 SBO DG, which does not require those support systems. In addition, the use of the MP3 SBO DG as the AAC source for MP2 is an improvement since the MP3 SBO DG is a fully capable AAC power source, not the minimally capable AAC power source the MP1 EDG was, as specified in the NRC Station Blackout SERs for MP2[3] and MP3.[4]

The new cross-tie will also be credited to provide an alternate on-site power source to meet the requirements of 10 CFR 50 Appendix R, Section III.L, in the event of a fire in fire areas R-1, R-11, and R-16 at MP2. The cross-tie will provide sufficient load capacity and voltage capability from the MP3 SBO DG to power the required safe shutdown loads at MP2 for up to 72 hours.

Based on the above, the new cross-tie between MP3 and MP2 will not adversely impact the health and safety of the public. Therefore, the proposed design is safe.

---

[3] G. S. Vissing letter from the NRC, "Safety Evaluation of Station Blackout Analysis for Millstone, Unit No. 2 (TAC 68567)," dated September 27, 1990.

[4] V. L. Rooney letter from the NRC, "Millstone Nuclear Power Station, Unit 3 - Station Blackout Evaluation (TAC M68568)," dated January 30, 1992.

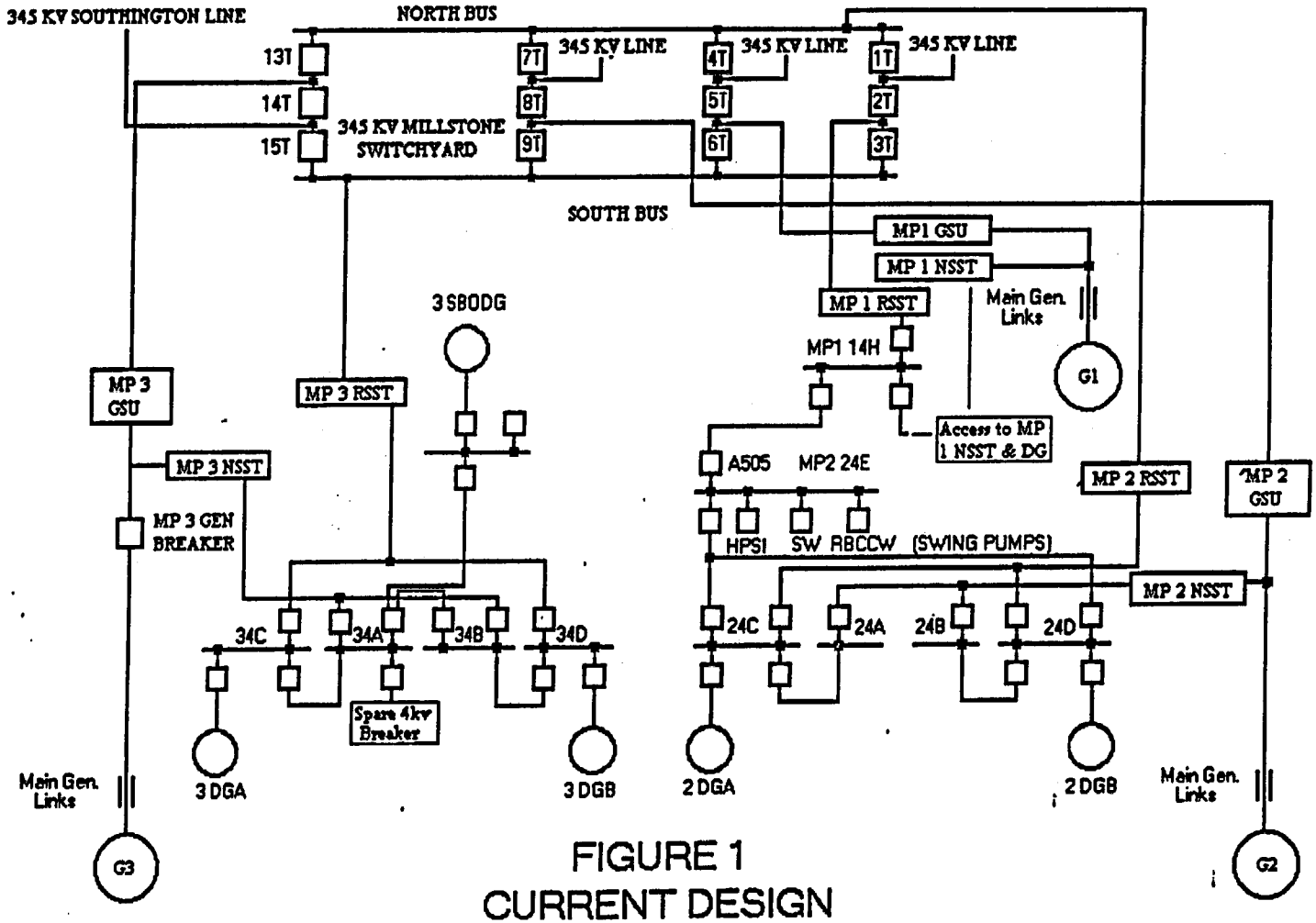

FIGURE 1
CURRENT DESIGN

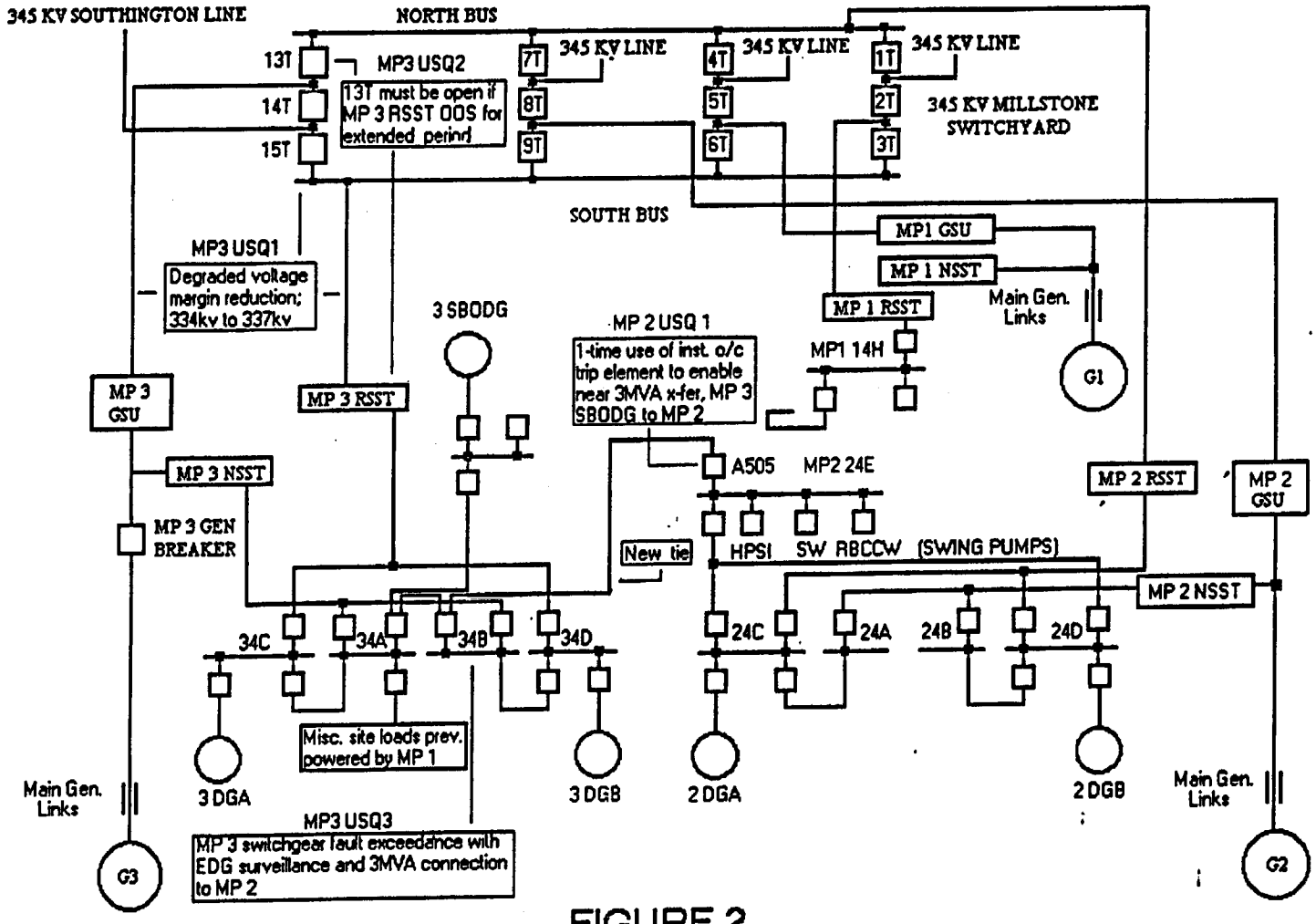

FIGURE 2
NEW DESIGN

Docket Nos. 50-336
50-423
B18199

Attachment 2

Millstone Nuclear Power Station, Unit Nos. 2 and 3

License Amendment Request
Proposed Revision to Final Safety Analysis Report
4160 Volt Cross-Tie of MP3 to MP2
Significant Hazards Considerations

License Amendment Request
4160 Volt Cross-Tie of MP3 to MP2
Proposed Revision to Final Safety Analysis Report
Significant Hazards Considerations

Description of License Amendment Request

The decommissioning of Millstone Unit No. 1 (MP1) requires that the 4160 Volt cross-tie with Millstone Unit No. 2 (MP2) be replaced. A new Millstone Unit No. 3 (MP3) to MP2 4160 Volt cross-tie will replace the existing MP1 to MP2 4160 Volt cross-tie. This new cross-tie will be credited as the 10 CFR 50, Appendix A, General Design Criteria (GDC) 17 alternate source of offsite power; a source of onsite AC power to mitigate a station blackout (10 CFR 50.63); and a source of onsite AC power to mitigate several 10 CFR 50, Appendix R scenarios.

The new design was evaluated utilizing the criteria of 10 CFR 50.59. This evaluation has determined that four aspects of the new design and associated implementation involve unreviewed safety questions (USQs). The four USQs are summarized below. The first USQ pertains to MP2 and the remaining three USQs pertain to MP3. These four USQs are associated with the change to the new shared electrical design addressing the requirements of GDC 5 and GDC 17 for MP2 and MP3.

MP2 USQ 1

A test will be performed to demonstrate the new MP3 to MP2 cross-tie connection integrity, and verify load carrying capacity. This test will utilize a temporary overcurrent protection scheme while the non-Class 1E MP3 Station Blackout (SBO) Diesel Generator (DG) is paralleled to the Class 1E MP2 4160 Volt system. This off-normal electrical configuration, and its reliance on a special overcurrent scheme to assure 4160 Volt system operability, creates the potential for a malfunction of a different type.

MP3 USQ 1

The MP3 to MP2 4160 Volt cross-tie will impose up to an additional 3 MVA load on MP3. As a result, the margin between the minimum switchyard voltage (345 kV) and the minimum acceptable switchyard voltage (increases from 334 kV to 337 kV) has been reduced from 11 kV to 8 kV. This is a reduction in the operational margin that was stated in a previous NRC Safety Evaluation Report for MP3.

MP3 USQ 2

To utilize the MP3 NSST as an alternate source of AC power for MP2, breaker 13T and its associated disconnect switches will have to be maintained opened. In the event that MP3 was utilizing the MP3 NSST as the sole offsite AC power source when shut down, opening breaker 13T increases the probability that MP3 could lose offsite power. As a

result, opening the 13T breaker will increase the probability of a malfunction of equipment important to safety.

MP3 USQ 3

The connection of an additional 3 MVA load onto the MP3 electrical distribution system, when a very specific set of plant conditions exist at MP3, will increase the short circuit fault levels on the MP3 electrical distribution system. The additional contribution from the MP2 loads could increase the fault level to above the switchgear ratings if a fault occurs when MP3 is supplying power to MP2. As a result, the addition of 3 MVA load to the MP3 station service transformers (NSST and RSST) will increase the probability of a malfunction of equipment important to safety.

Separate evaluations of the USQs, by associated unit, as required by 10 CFR 50.92, are presented below.

Basis for No Significant Hazards Consideration - Millstone Unit No. 2 Unreviewed Safety Question

Northeast Nuclear Energy Company (NNECO) has reviewed the proposed activity in accordance with 10 CFR 50.92 and has concluded that the activity does not involve a Significant Hazards Consideration (SHC). The basis for this conclusion is that the three criteria of 10 CFR 50.92(c) are not compromised. The proposed activity does not involve an SHC because the activity would not:

1. Involve a significant increase in the probability or consequences of an accident previously evaluated.

   The test that will be performed to verify the ability of the cross-tie to supply approximately 3 MVA of power from MP3 to MP2 will require parallel operation of the MP3 SBO DG with the MP2 4160 Volt system. To ensure that the MP3 SBO DG and associated connection will be isolated immediately should any abnormal event or failure occur at MP2, a special Class 1E instantaneous overcurrent relaying scheme will be used. This will provide additional assurance that if a fault occurs in the MP3 SBO DG or the associated cross-tie cabling, it will be isolated immediately and should not affect operability of the MP2 safety related 4160 Volt system. In addition, if a loss of normal power occurs at MP2 during the test, the undervoltage condition will be detected by the credited undervoltage scheme, and MP2 will respond as designed to the loss of power.

   The performance of this test does not significantly alter the manner in which the plant is operated. There will be no adverse effect on plant operation or accident mitigation equipment. The response of the plant and the operators following a design basis event will not be significantly different. Therefore, the proposed activity does not involve a significant increase in the probability or consequences of an accident previously evaluated.

2. Create the possibility of a new or different kind of accident from any accident previously evaluated.

   The installation of the Class 1E instantaneous overcurrent relay scheme to be used during performance of this test will provide additional assurance that the MP2 safety related busses will remain operable during the test to parallel the MP3 SBO DG to the MP2 4160 Volt system. The failure of the temporary overcurrent protection scheme would have the same effect as failure of the existing overcurrent protection scheme. Therefore, the proposed activity does not create the possibility of a new or different kind of accident from any accident previously evaluated.

3. Involve a significant reduction in a margin of safety.

   The installation of the Class 1E instantaneous overcurrent relay scheme to be used during performance of this test will provide additional assurance that the MP2 safety related busses will remain operable during the test to parallel the MP3 SBO DG to the MP2 4160 Volt system. This will provide additional assurance that if a fault occurs in the MP3 SBO DG or the associated cross-tie cabling, it will be isolated immediately and should not affect operability of the MP2 safety related 4160 Volt system. In addition, if a loss of normal power occurs at MP2 during the test, the undervoltage condition will be detected by the credited undervoltage scheme, and MP2 will respond as designed to the loss of power.

   The proposed activity will have no adverse effect on plant operation or equipment important to safety. The plant response to the design basis accidents will not change and the accident mitigation equipment will continue to function as assumed in the design basis accident analysis. Therefore, the proposed activity does not involve a significant reduction in a margin of safety.

<u>Basis for No Significant Hazards Consideration - Millstone Unit No. 3 Unreviewed Safety Questions</u>

NNECO has reviewed the proposed activity in accordance with 10 CFR 50.92 and has concluded that the activity does not involve a SHC. The basis for this conclusion is that the three criteria of 10 CFR 50.92(c) are not compromised. The proposed activity does not involve an SHC because the activity would not:

1. Involve a significant increase in the probability or consequences of an accident previously evaluated.

   MP3 USQ 1

   The MP3 to MP2 4160 Volt cross-tie will impose up to an additional 3 MVA load on MP3. As a result, the minimum acceptable switchyard voltage for MP3 will increase

from 334 kV to 337 kV. The analysis performed to support the new design shows that, with a minimum voltage of 337 kV in the switchyard, MP3 will remain connected to offsite power. The minimum voltage protection assures that acceptable starting and running voltages are present for the safety systems that may be required to operate should a loss of coolant accident (limiting design basis event) occur at MP3 while MP2 is being supplied with the safe shutdown load of 3 MVA from either the MP3 RSST or the MP3 NSST. Thus, the MP3 offsite connection will not be tripped when offsite power is available.

The extra loading imposed by the MP2 safe shutdown loads on the MP3 power supplies is within the MP3 capability to simultaneously supply the worst case MP3 normal and accident loads. The ability of MP3 to mitigate design basis accidents and events is not adversely affected by the new design.

This activity does not significantly alter the manner in which the plant is operated. There will be no adverse effect on plant operation or accident mitigation equipment. Also, the response of the plant and the operators following a design basis event will not be significantly different. Therefore, this activity does not involve a significant increase in the probability or consequences of an accident previously evaluated.

MP3 USQ 2

The proposed design change will allow the MP3 RSST (or the MP3 NSST, if the MP3 RSST is unavailable) to provide the alternate offsite source for MP2 to meet GDC 17 requirements. If the MP3 RSST is not available, MP2 will need to credit the MP3 NSST as the alternate offsite power supply for GDC 17 compliance. The connection for the MP3 NSST is between breakers 13T and 14T. This connection point only provides 1 breaker separation (13T) between the MP2 RSST and the MP3 NSST. If breaker 13T is closed, this arrangement does not provide adequate separation between the two offsite sources as required by GDC 17. Opening breaker 13T when MP3 is shutdown will provide the required separation for MP2, but it will reduce the reliability of the offsite supply for MP3. Therefore, opening the 13T breaker to allow MP2 to meet GDC 17 requirements increases the probability of a loss of offsite power at MP3 when shut down.

A loss of offsite power at MP3 due to a fault in the offsite distribution network is a low probability event. When combined with the expected frequency of removing the MP3 RSST from service of once per MP3 refueling outage, the probability of a loss of offsite power at MP3 when shutdown as a result of breaker 13T being open is low. In addition, the MP3 shutdown risk program will evaluate the impact of removing the MP3 RSST from service, and plan accordingly. This will ensure the MP3 RSST will be removed from service when the shutdown risk is determined to be acceptably low. Also, at least one MP3 EDG will be available, as required by Technical Specifications, to supply power to necessary loads if offsite power is lost.

This activity does not significantly alter the manner in which the plant is operated. There will be no adverse effect on accident mitigation equipment. Also, the response of the plant and the operators following a design basis event will not be significantly different. Therefore, this activity does not involve a significant increase in the probability or consequences of an accident previously evaluated.

MP3 USQ 3

The connection of an additional 3 MVA load for MP2 onto the MP3 electrical distribution system will increase the short circuit fault levels on the MP3 electrical distribution system. If worst case conditions are established, the additional contribution from the MP2 loads would increase the fault level to above the switchgear ratings. The worst case short circuit conditions occur with MP3 at full power, the switchyard at its maximum voltage, an MP3 EDG paralleled to the bus for surveillance testing, and the MP3 to MP2 cross-tie supplying 3 MVA of power to MP2.

Although the fault levels could exceed the MP3 switchgear and circuit breaker ratings, it is not expected that the worst case conditions will be frequently established. For the majority of scenarios, this situation can be avoided because the new design allows the 3 MVA of power for MP2 to be supplied by either MP3 bus 34A or 34B. Procedural guidance will be provided to select the MP3 bus (34A or 34B) to supply power to MP2 that powers the opposite train from the train associated with the MP3 EDG to be tested. Even if the worst case plant configuration cannot be avoided, there is a low probability of event occurrence given the low probability of a bus fault coincident with the short time that the MP3 EDG would be paralleled to the system. In addition, the event would only affect one MP3 train of safety related equipment. The other train will be available to function as assumed to mitigate any accidents that may occur.

The use of the MP3 to MP2 cross-tie does not significantly alter the manner in which the plant is operated. Considering the low likelihood of a fault occurring concurrently with worst case conditions, and that only one MP3 train of safety related equipment should be affected, sufficient accident mitigation equipment will be available to mitigate a design basis accident. In addition, the response of the plant and the operators following a design basis event will not be significantly different. Therefore, this activity does not involve a significant increase in the probability or consequences of an accident previously evaluated.

2. Create the possibility of a new or different kind of accident from any accident previously evaluated.

MP3 USQ 1

The ability to supply 3 MVA of power from MP3 to MP2 will reduce the margin between the minimum switchyard voltage and the minimum acceptable switchyard

voltage. However, the extra loading imposed by the MP2 safe shutdown loads on the MP3 power supplies is within the MP3 capability to simultaneously supply the worst case MP3 normal and accident loads. As a result, the response of the plant and the operators following an accident will not be significantly different. There will be no adverse effect on accident mitigation equipment and no new failure modes will be introduced. Therefore, the activity will not create the possibility of a new or different kind of accident from any previously evaluated.

MP3 USQ 2

Maintaining breaker 13T and its associated disconnect switches open to ensure separation and independence of the two MP2 offsite sources is a change to the normal configuration of MP3. The new configuration involves the opening of a breaker. It does not involve any other physical changes to the plant or the operating methodology. This activity does reduce the diversity of offsite power supplies for the MP3 NSST, which increases the potential for a loss of offsite power at MP3. However, the plant response to a loss of offsite power because breaker 13T is open will not be significantly different from any previously analyzed loss of offsite power. Therefore, opening breaker 13T and its associated disconnect switches will not create the possibility of a new or different kind of accident from any previously evaluated.

MP3 USQ 3

The connection of an additional 3 MVA load for MP2 onto the MP3 electrical distribution system will increase the short circuit fault levels on the MP3 electrical distribution system. In the worst case, the short circuit fault could lead to a loss of one MP3 train of safety related equipment. However, the safety related equipment in the other train would remain capable of mitigating the event. The loss of a train of safety-related equipment is an analyzed event. Therefore, this activity will not introduce the possibility of a new or different kind of accident than any previously evaluated.

3. Involve a significant reduction in a margin of safety.

MP3 USQ 1

The MP3 to MP2 4160 Volt cross-tie will impose up to an additional 3 MVA load on MP3. As a result, the minimum acceptable switchyard voltage for MP3 will increase from 334 kV to 337 kV. The margin between the minimum switchyard voltage (345 kV) and the minimum acceptable switchyard voltage will decrease from 11 kV to 8 kV. This is an improvement for MP2. However, it is a reduction in the operating margin for MP3.

The analysis performed to support the new design shows that, with a minimum voltage of 337 kV in the switchyard, MP3 will remain connected to offsite power.

The minimum voltage protection assures that acceptable starting and running voltages are present for the safety systems that may be required to operate should a loss of coolant accident (limiting design basis event) occur at MP3 while MP2 is being supplied with the safe shutdown load of 3 MVA from either the MP3 RSST or the MP3 NSST. Thus, the MP3 offsite connection will not be tripped when offsite power is available.

The extra loading imposed by the MP2 safe shutdown loads on the MP3 power supplies is within the MP3 capability to simultaneously supply the worst case MP3 normal and accident loads. As a result, the response of the plant and the operators following an accident will not be significantly different. There will be no adverse effect on plant operation or equipment important to safety. The plant response to the design basis accidents will not change and the accident mitigation equipment will continue to function as assumed in the design basis accident analysis. Therefore, this activity does not involve a significant reduction in a margin of safety.

MP3 USQ 2

The proposed design change will allow the MP3 RSST (or the MP3 NSST, if the MP3 RSST is unavailable) to provide the alternate offsite source for MP2 to meet GDC 17 requirements. If the MP3 RSST is not available, MP2 will need to credit the MP3 NSST as the alternate offsite power supply for GDC 17 compliance. This will require the 13T breaker to be open to meet GDC 17 requirements. As a result, the probability of a loss of offsite power at MP3 will increase.

A loss of offsite power at MP3 due to a fault in the offsite distribution network is a low probability event. When combined with the expected frequency of removing the MP3 RSST from service of once per MP3 refueling outage, the probability of a loss of offsite power at MP3 when shut down as a result of breaker 13T being open is low. In addition, the MP3 shutdown risk program will evaluate the impact of removing the MP3 RSST from service, and plan accordingly. This will ensure the MP3 RSST will be removed from service when the shutdown risk is determined to be acceptably low. Also, at least one MP3 EDG will be available, as required by Technical Specifications, to supply power to necessary loads if offsite power is lost.

The plant response to the design basis accidents will not change with breaker 13T open, and the accident mitigation equipment will continue to function as assumed in the design basis accident analysis. Therefore, this activity does not involve a significant reduction in a margin of safety.

MP3 USQ 3

The connection of an additional 3 MVA load for MP2 onto the MP3 electrical distribution system will increase the short circuit fault levels on the MP3 electrical distribution system. If worst case conditions are established, the additional contribution from the MP2 loads would increase the fault level to above the

switchgear ratings. The worst case short circuit conditions occur with MP3 at full power, the switchyard at its maximum voltage, an MP3 EDG paralleled to the bus for surveillance testing, and the MP3 to MP2 cross-tie supplying 3 MVA of power to MP2.

Although the fault levels could exceed the MP3 switchgear and circuit breaker ratings, it is not expected that the worst case conditions will be frequently established. For the majority of scenarios, this situation can be avoided because the new design allows the 3 MVA of power for MP2 to be supplied by either MP3 bus 34A or 34B. Procedural guidance will be provided to select the MP3 bus (34A or 34B) to supply power to MP2 that powers the opposite train from the train associated with the MP3 EDG to be tested. Even if the worst case plant configuration cannot be avoided, there is a low probability of event occurrence given the low probability of a bus fault coincident with the short time that the MP3 EDG would be paralleled to the system. In addition, the event would only affect one MP3 train of safety related equipment. The other train will be available to function as assumed to mitigate any accidents that may occur.

The response of the plant and the operators following a design basis event will not be significantly different when using the MP3 to MP2 4160 Volt cross-tie. The accident mitigation equipment will continue to function as assumed in the design basis accident analysis. Therefore, this activity does not involve a significant reduction in a margin of safety.

Docket Nos. 50-336
50-423
B18199

Attachment 3

Millstone Nuclear Power Station, Unit Nos. 2 and 3

License Amendment Request
Proposed Revisions to Final Safety Analysis Reports
4160 Volt Cross-Tie of MP3 to MP2
Marked Up Pages of the MP2 FSAR

1.2.9 Electrical Systems

The Millstone Nuclear Power Station consists of Millstone Unit 1 with a 735-MVA, 0.90 power factor generator, Millstone Unit 2 with a 1011-MVA, 0.90 power factor generator, and Millstone Unit 3 with a 1354.7-MVA, 0.925 power factor generator (see Chapter 8).

The Millstone Unit 2 generator output is fed through a step up transformer to the 345-kV switchyard. The switchyard is connected to the high voltage transmission system through four 345-kV transmission lines. The switchyard, in addition to carrying the electrical output of the station, also provides a means of supplying power to the units from external sources. Startup power and reserve auxiliary power for Millstone Unit 2 are taken from the 345-kV switchyard through the reserve station service transformer. Normal station service power is taken from the generator main leads through the normal station service transformer. ~~A second source of offsite power for the engineered safety features is provided from reserve station service transformer 15G-21G associated with Millstone Unit 1. In addition, onsite emergency power for Millstone Unit 2 is provided by two diesel generators or the Millstone Unit 1 emergency sources through the backfeed connection.~~ Insert 1.2.9

Auxiliary power for Millstone Unit 2 is provided at 6900,4160,480, and 120/208 volts. Direct-current 125-volt systems are also available for emergency power, engineered safety feature control, and essential nuclear instrumentation, control and relaying.

The preferred and onsite emergency sources of electrical power are each adequate to permit prompt shutdown and maintain safe conditions under all credible circumstances. The onsite emergency power source consists of two separate and redundant diesel generators. Each diesel is capable of carrying all required auxiliary loads following postulated LOCA without exceeding its continuous rating.

Each of the two separate and redundant station batteries is capable of carrying essential 125-volt DC and 120-volt AC inverter loads associated with a postulated LOCA. A spare full capacity battery charger is provided which can be aligned by key interlocked breakers with either redundant DC bus. However, since its AC input is from Train A, it can not be used to replace the Train B battery charger during normal plant operation.

The redundant channel wiring associated with these emergency electrical sources is physically separated.

1.2.10 Auxiliary Systems

1.2.10.1 Chemical and Volume Control System

The chemistry of the reactor coolant is controlled by purification of a regulated letdown stream of reactor coolant. Water removed from the reactor coolant system is cooled in the regenerative heat exchanger. The fluid pressure is then reduced and flow is regulated by the letdown control valves. Temperature is reduced further in the letdown heat exchanger. From there, the flow passes through a filter and a purification ion exchanger to remove corrosion and fission products. A small fraction of the flow is diverted prior to entering the ion exchanger. This stream of coolant flows through a process radiation monitor. Upon leaving the ion exchanger, the coolant flows through a strainer and another filter and is then sprayed into the volume control tank. (95-9

00-MP2-9

Insert 1.2.9

A second source of offsite power for the engineered safety features is provided from normal station service transformer 15G-3SA or reserve station service transformer 15G-23SA, both associated with Millstone Unit 3 via a 4160V crosstie connection. Two diesel generators provide the onsite emergency power for Millstone Unit 2. The 4160V crosstie from Unit 3 can also be configured (by operator action) to supply power directly from the Unit 3 Alternate AC (SBO) diesel generator to provide an alternate AC source for Unit 2 Appendix R and Station Blackout requirements.

00-MP2-9

disposal. Noncompactible solid wastes may be shipped to an offsite processor for volume reduction prior to disposal.

1.2.13 Interrelation With Millstone Units 1 and 3

A number of the facilities of the Millstone Nuclear Power Station are common to Millstone Units 1, 2, and 3. The safe shutdown of any unit will not be impaired by the failure of the facilities and systems which are shared. A list of these facilities and systems follows:

a. Facilities

Radiochemistry laboratory
Radioactive and clean change facilities, including showers, lockers, clothing storage, and toilets
Health physics offices
Instrument repair room
Warehouse machine shop
Millstone Unit 1 stack (for Unit 2 waste gas), main condenser air ejector and enclosure building filtration system discharge 78-167
General offices
First aid station
Lunch room
Visitors gallery
345 kV switch yard
Millstone Unit 1 reserve station service transformer 15G-21S (3 normal; 3SA)
Makeup water treatment (Millstone Units 2 and 3 only)
Bulk storage chemical ton (Millstone Units 2 and 3 only)
Millstone Unit 3 reserve station service transformer 15G-23SA
Millstone Unit 3 SBO diesel generator system

b. Systems

Low pressure nitrogen storage
Fire protection
Auxiliary steam
Makeup water treatment
Building heating
Sanitary sewers
Plant water
Communications
Hydrogen storage
Station Air (A system cross-tie between Unit 1 and Unit 2 air headers is provided).

Operating and maintenance personnel are employed in all three units as described in Section 12.1.

Both units have a double containment system with rectangular outer envelopes.

The 40 CFR 190 offsite radiation dose limits will not be exceeded by simultaneous operation of Millstone Units 1, 2, and 3.

c. Short circuits on any section of bus are isolated without interrupting service to any element other than those connected to the faulty bus section.

d. The failure of any circuit breaker to trip within a set time initiates the automatic tripping of the adjacent breakers and thus may result in the loss of a line or generator for this contingency condition; however, power can be restored to the good element in less than one hour by manually isolating the fault with appropriate disconnect switches. 95-18 9/95

Overhead lines from the switchyard to the reserve station service transformers are separated at the switchyard structure and are carried on separate towers. These transformers are located near each Unit, and are physically isolated from the normal station service transformers and from the main transformers.

3 34A or 34B

In the event of loss of power from the normal station service transformer, there is an immediate automatic transfer of auxiliary loads to the Unit 2 reserve station service transformer. In the unlikely event that power is not available from this source, and from the Onsite Emergency Diesel mentioned below, the operator can manually connect emergency bus A-5 (24E) to Unit 1 bus 14H. By means of interlocked circuit breakers, the Unit 2 vital loads can be fed from this source.
postaccident

The on-site power supply system is described in Sections 8.3 and 8.5. Two full capacity, separate and redundant batteries are provided for all DC loads and for 120-volt AC vital instrument loads. In addition to the charger for each battery, a third charger can be connected to either battery through interlocked circuit breakers. However, since its AC input is from Train A, it cannot be used to replace the Train B battery charger during normal plant operation. (6/90) 93-27 (4/93)

In the event that off-site power is not available when needed, a "start" signal is given to both emergency diesel generators (DG). These generators and their auxiliaries are entirely separate and redundant, and each generator feeds one 4,160-volt emergency bus. A generator is automatically connected to its bus only if there is no bus voltage and only if the dead bus did not result from protective relay action.

The electric power distribution system is described in Section 8.7. The redundancy of the power sources is enhanced by separate and redundant auxiliary power and control distribution systems. A single failure and any possible related failures in that channel cannot adversely affect equipment and components on the other redundant channel.

Due to the redundancy and separation of power supplies, distribution and control required for vital functions, all components can be readily inspected and tested. Similarly, most subsystems can be tested in their entirety.

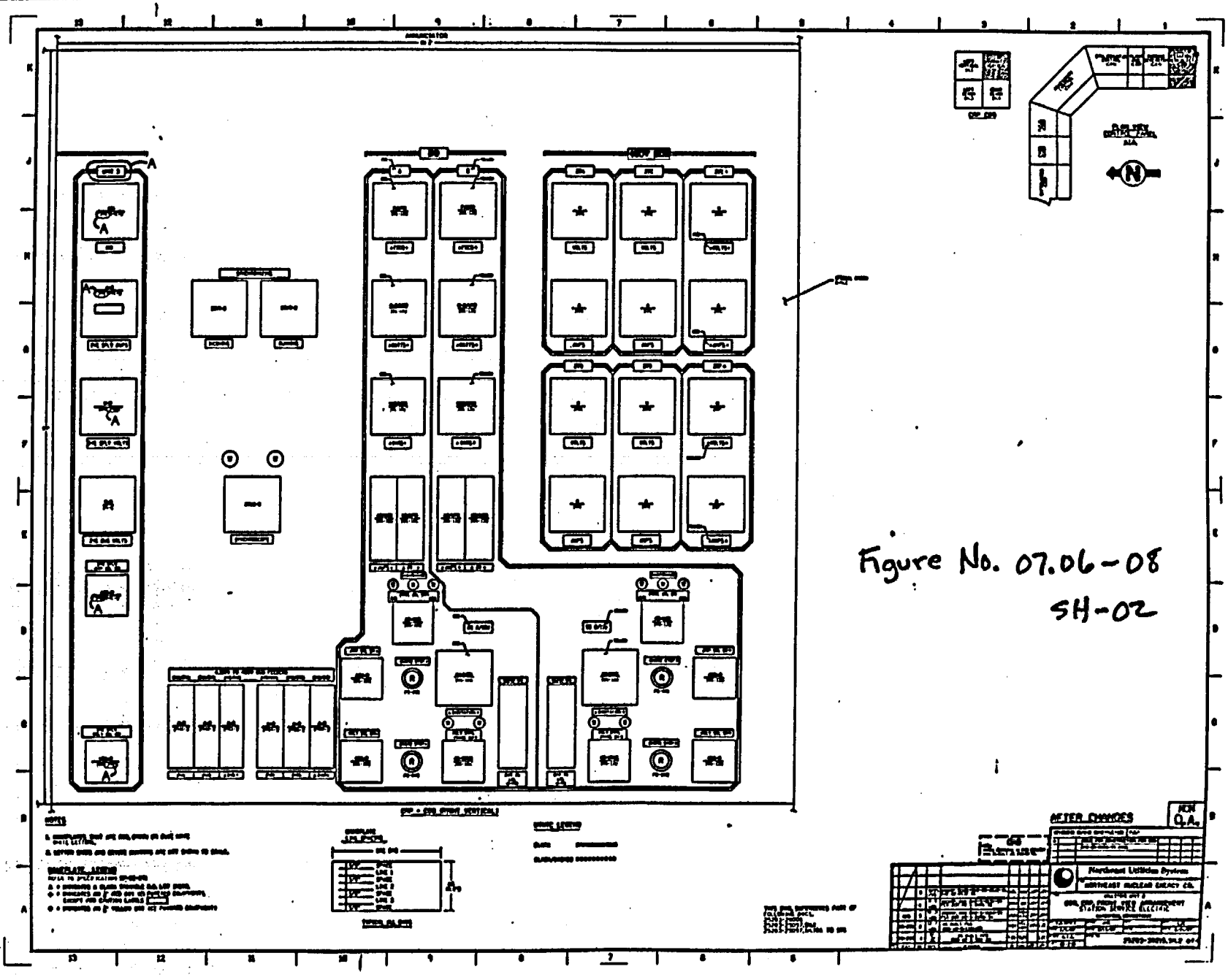

Figure No. 07.06-08
SH-02

00-MP2-9

00-MP2-

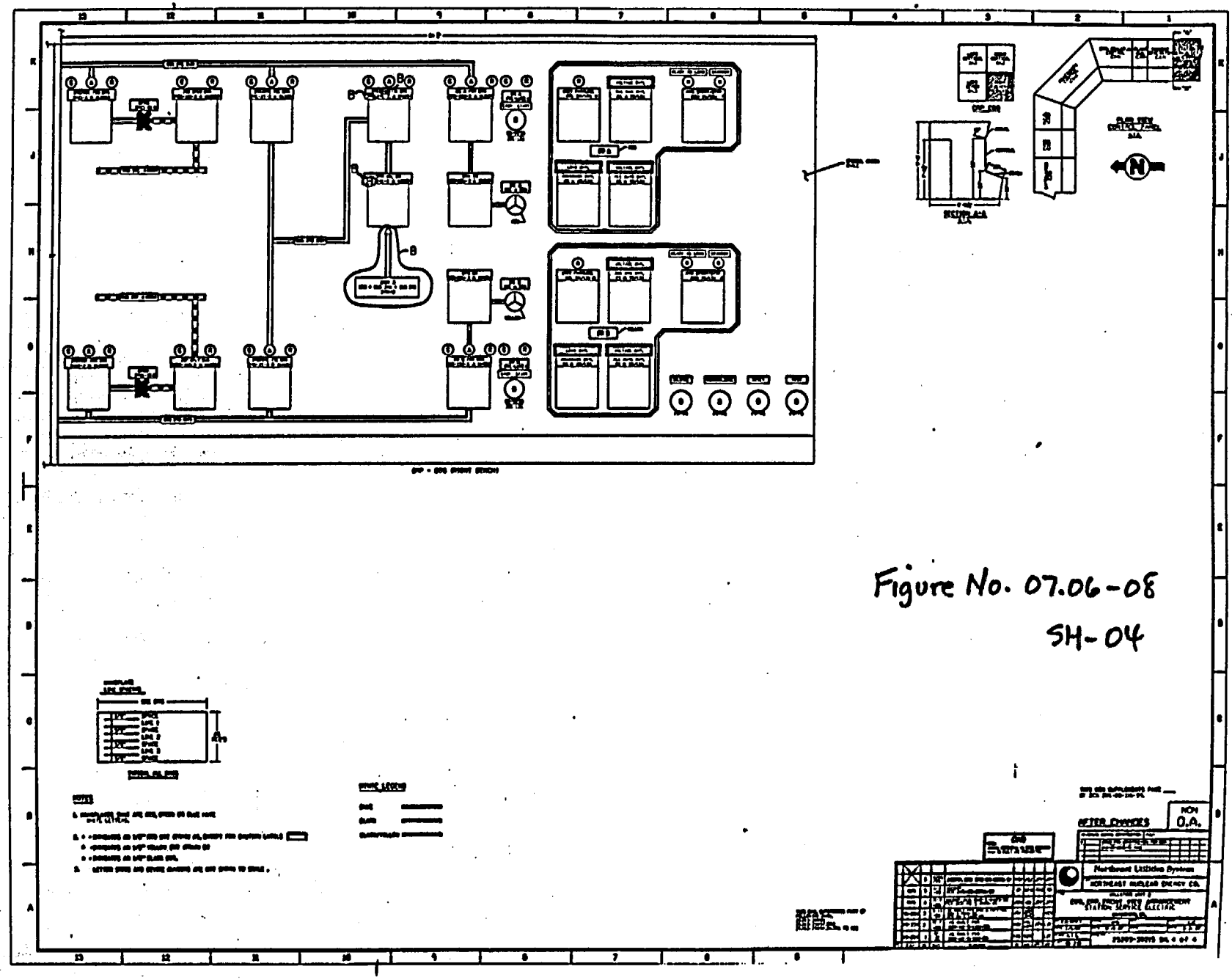

Figure No. 07.06-08
SH-04

Preferred Power System

The preferred off-site power supply is from the 345-kV switchyard, and the reserve station service transformer.

Alternate Off-Site Source

The alternate off-site source is the 4160-V tie to Millstone Unit ~~1~~ 3 via bus ~~141~~ 34A or 34B 98-126

8.1.1.1 Design Criteria

The 345-kV switchyard and the associated transmission lines provide the offsite sources that are the preferred power supplies, as outlined in Section 5.2.3 of IEEE Standard 308-1971 and Criterion 17 of Appendix A of 10 CFR Part 50. The conventional and accepted design of these facilities has been shown to be conservative and reliable.

Transmission facilities connecting the Millstone generating units to the main transmission grid are designed in accordance with the "Basic Criteria for Design and Operation of Interconnected Power Systems," developed by the Northeast Power Coordinating Council (NPCC).

8.1.1.2 Utility Grid

The NU electrical system, exclusive of its Public Service of New Hampshire affiliate, consists of interconnected fossil fueled, hydro-electric and nuclear-fueled plants supplying electric energy over a 345/115-kV transmission system (Figure 8.1-1C). 98-126

NU, a member of the New England Power Pool (NEPOOL), is interconnected with New England 345-kV system. The Connecticut Valley Electric Exchange (CONVEX) is ~~an operating division of NEPOOL~~ one of four operating centers under Independent System Operator-New England (ISO-NE) control. 98-126

The electrical output of Millstone Unit 2 is delivered to the 345-kV switchyard (Figure 8.1-1D). Four 345-kV transmission lines feed power to the NU 345-kV system. Two of these lines feed the eastern part of Connecticut by connecting respectively to the Card and Montville substations of The Connecticut Light and Power Company (CL&P), a NU affiliate. The remaining two lines feed the central part of Connecticut by connecting to the Southington substation and the Manchester substation of CL&P.

8.1.1.3 Interconnections

The transmission system from NU's generation facilities is closely integrated with those of other utilities in NEPOOL and the New York Power Pool (NYPP). NU has one interconnection with Central Hudson Gas and Electric at 69-kV, one interconnection with Consolidated Edison Company at 345-kV, one interconnection with Eastern Utilities Associates at 345-kV, one interconnection with Long Island Lighting Company at 138-kV, one interconnection with Massachusetts Municipal Wholesale Electric Company at 345 kV, one interconnection at 345-kV and nine interconnections at 115-kV with New England Electric System, one interconnection with Niagara Mohawk Power Corporation at 345-kV, one interconnection at 345-kV and sixteen interconnections at 115-kV with United Illuminating Company, and one interconnection with Vermont Electric Power Company at 345-kV. 98-126

from service. The insulating oil for the transformers (main step up, normal station service transformer (NSST), reserve station service transformer (RSST)) is sampled and tested on a routine basis. During these routine inspections and tests, the operability and functional performance of the electric systems are verified. 98-126

8.1.2.2 Analysis

The possibility of power failure due to faults in the connections to the system and the associated switchyard is minimized by the following arrangements:

a. The connections to the system have been designed to comply with the NPCC "Basic Criteria for the Design and Operation of Interconnected Power Systems" and the "Reliability Standards for the New England Interconnected Power Pool" adopted by that pool. Compliance with these criteria ensure that the supply of off-site power will not be lost following severe faults in the interconnected transmission system. Transient stability studies have been performed to verify that widespread or cascading interruptions to service will not result from these contingencies. In addition, the loss of Millstone Unit 2 or the loss of any other unit in the system will not result in cascading system outages and thus will not cause loss of off-site power to the units.

   The 345-kV circuit breakers are either air-blast or SF_6 puffer type and are pneumatically operated. Electrical controls are provided for both local and remote Millstone 1 control room or CONVEX operation. Each power circuit breaker has a separate pneumatic supply unit capable of operating the breaker for five close-open operations after the loss of its pneumatic supply unit. The essential AC station service for the power circuit breaker pneumatic supply units and the other switchyard requirements is supplied by ~~a source from Millstone Unit 1~~ a source from Millstone Unit 3 which has transfer capability to ~~an offsite 23-kV line~~ an offsite 23kV line. The circuit breakers are equipped with a closing solenoid and two independent trip solenoids. A standard anti-pump and trip-free control scheme is used. 98-126

   Two 125-V DC batteries are located in the switchyard control and relay enclosure for switchyard relaying and control. Each battery has its own charger and DC distribution panel. The redundant batteries and protective relaying systems are physically and electrically separate. 98-126

b. The 345-kV system is protected from lightning and switching surges by overhead electrostatic shield wires, earth grounding at most structures, surge arrestors on the switchyard main buses, surge arrestors at the transformer high voltage bushings, and rod gaps on the disconnect switches. 98-126

c. Each 345-kV transmission line is protected from phase to phase and phase to ground faults by two sets of protective relays, one primary and one back-up, both of which are high speed schemes.

   The primary line protection consists of a solid state distance relaying package in a directional comparison blocking scheme communicating with the remote terminal over a carrier current channel.

1. Any circuit can be switched under normal or fault conditions without affecting another circuit.

2. Any single circuit breaker can be isolated for maintenance without interrupting power or protection of any circuit.

3. Short circuits on any section of a bus are isolated without interrupting service to any element other than those connected to the faulty bus section.

4. The failure of any circuit breaker to trip within a set time initiates the automatic tripping of the adjacent breakers and thus may result in the loss of a line or generator for this contingency condition; however, power can be restored to the good element in less than one hour by manually isolating the fault with appropriate disconnect switches.

Complete battery failure is considered highly unlikely since two independent 125-V DC battery systems are provided. Failure of a single battery system results only in a momentary loss of one set of protective relays until the DC is manually transferred to the other battery. Therefore, no single failure could negate the effectiveness of the relaying to clear a fault. 98-126

The Millstone design provides two offsite circuits between the switchyard and the 4.16-kV Class 1E buses. The immediately available offsite supply is the Millstone Unit 1 bus 14H 98-126
3 34A or 34B

The normal supply to the plant with the plant on line is the NSST. If this source is lost due to a plant trip, a fast bus transfer scheme connects the plant electrical system (6.9-kV and 4.16-kV) to the RSST. The second or alternate source of offsite power is available by manual controls to bus 14H for 4.16-kV power. 98-126
Millstone Unit 3 34A or 34B

Physical separation of the off-site power sources, switchyard protection, redundancy, and the transmission system design based on load flow and stability analyses minimize the possibility of simultaneous failure of all power sources (reserve station service supply, standby AC emergency generators, and Millstone Unit 1 bus 14H).
3 34A or 34B

The 345-kV transmission system supplying off-site power to Millstone is normally operated at 357-kV at Millstone. This system voltage is controlled by varying the reactive power generation on the Millstone Power Station units. The Millstone Units 1, 2, and 3 operators control the unit excitation as specified by CONVEX Operation Instruction No. 6913. The unit operators are required to balance the reactive power output of the units.

The CONVEX system operator supervises the system reactive power dispatch. The CONVEX operator directs the loading of all the reactive power sources in CONVEX to balance the reactive supply. The CONVEX operator keeps the Millstone Power Station reactive power generation in balance with the Eastern Area requirements so that the effect on the system of voltage variations is minimized when a unit is lost.

One objective of the reactive power dispatch is to prevent the voltage at the Millstone Power Station from going below the minimum required to support actuation of the Engineered Safety Features equipment. A switchyard voltage of 345-kV will assure 98-126

least three circuit breakers would have to fail before three transmission lines would be lost due to malfunctions in the switchyard. At that point, the SLOD generation rejection scheme would operate to keep one unit in service. In order to lose the entire station, at least four circuit breakers must fail. 98-126

With the Millstone net output above 2,200 MW, the Double Line Trip Detector must be operational to maintain system stability, in order to comply with both Nuclear Regulatory Commission (licensing basis) and NPCC criteria. Therefore, this SPS incorporates redundant sensing, logic and tripping features in its design. The Failed Breaker Detector Special Protection system is only needed to meet the NPCC extreme contingency criterion of a 3-phase fault with delayed fault clearing, therefore, it does not require redundancy features in its design. 98-126

8.1.3 Station Blackout (SBO)

On July 21, 1988, the Code of Federal Regulations 10 CFR Part 50, was amended to include Section 50.63 entitled "Loss of All Alternating Current Power," (Station Blackout [SBO]). The SBO rule requires that each light-water-cooled nuclear power plant be able to withstand and recover from a SBO event of specified duration, requires licensees to submit information as defined in 10 CFR Part 50.63, and requires licensees to provide a plan and schedule for conformance to the SBO rule. The SBO rule further requires that the baseline assumptions, analyses and related information be available for NRC review. Guidance for conformance to the rule is provided by (1) Regulatory Guide (RG) 1.155, Station Blackout; (2) NUMARC 87-00, Guidelines and Technical Bases for NUMARC Initiatives Addressing Station Blackout at Light Water Reactors; and (3) NUMARC 87-00 Supplemental Questions/Answers and Major Assumptions dated December 27, 1989 (issued to the industry by Nuclear Management and Resources Council, Inc. [NUMARC], dated January 4, 1990). 98-62

8.1.3.1 Station Blackout Duration

Millstone Unit 2 has the ability to cope with a loss of preferred and emergency on-site AC power sources for up to eight hours. Unit 2 must provide decay heat removal during the event. It is assumed that there will be no AC power available during the first hour of the SBO except for battery backed power supplies (i.e., vital 120V AC). Within the first hour, Millstone Unit 2 will have an alternate AC power source available from Millstone ~~Unit 1 bus 14H~~ Unit 3 Alternate AC (SBO) diesel generator.

~~Millstone Unit 1 bus 14H is normally independent from the Unit 2 off-site power sources. Bus 14H can be cross-tied to Millstone Unit 2 bus 24C or 24D through bus 24E. This alternate AC power source can be made available by operator action from the control room within one hour of the onset of the station blackout.~~ Insert 8.1.3.1

8.1.3.2 Ability to Cope with a Station Blackout

Eight hour coping assessments were performed for the 1) condensate inventory available for decay heat removal, 2) Class 1E battery capacity, 3) compressed air capability, 4) effects of loss of ventilation, 5) containment isolation, 6) emergency lighting, 7) communications, and 8) heat tracing. The results of these assessments are summarized below.

00-MP2-9

Insert 8.1.3.1

Millstone Units 2 and 3 each have two emergency diesel generators in addition to the Unit 3 Alternate AC (SBO) diesel generator. In accordance with the SBO Rule and NUMARC 87-00, one of the four emergency diesel generators would be available and a station blackout is postulated to occur at one unit only at any one time. In the event of a Unit 2 station blackout, the Unit 3 AAC diesel will be made available within one hour by Unit 3 operator action and connected to Unit 2 Bus 24E by Unit 2 operator action.

8.2 4160-VOLT AND 6900-VOLT SYSTEMS

8.2.1 Design Bases

8.2.1.1 Functional Requirements

From either of two full capacity station service transformers, power is supplied to two 6900-volt buses and to six 4160-volt station service buses. The 6900-volt switchgear feeds motors of 3000 horsepower and larger. The 4160-volt switchgear feeds large (250 to less than 3000 hp) motors and supplies power to 480-volt load center transformers. Additional sources of 4160-volt power are from the emergency diesel generators, and from the Unit 1 reserve station service transformer or Unit 1 Normal Station service transformer (backfeeding). ~~or the Unit 1 emergency power source (EDG) to MP2 through Unit 1 bus 14H.~~ 99-53

Delete Delete

8.2.1.2 Design Criteria

None of the 6900-volt equipment is required for safety related services, but three of the 4160-volt switchgear groups are part of Class 1E systems as defined in IEEE Standard 308, 1971. The Class 1E switchgear has been designed, built and tested in accordance with Sections 4 and 5.2 of IEEE Standard 308, 1971, Criteria 1, 2, 3, 17 and 18 of Appendix A of 10 CFR Part 50, seismic criteria as defined in Subsections 5.8.1 and 5.8.1.1 of this report, and Safety Guide 6.

8.2.2 SYSTEM DESCRIPTION

8.2.2.1 System

The 6900-volt system, shown in Figure 8.2-1, is a reliable source of power for the reactor coolant and condensate pumps. The system consists of two buses, 25A (H1) and 25B (H2) each capable of being fed from the 6900-volt winding of either the normal or the reserve station service transformer. The 6900-volt winding of each transformer is sized to supply the full-load requirements of both buses.

The 4160-volt system, shown in Figure 8.2-1, consists of six buses, 24A (A1), 24B (A2), 24C (A3), 24D (A4), 24E (A5) and 24G (A7), each consisting of a metal-clad switchgear assembly with vertical lift air circuit breakers. The 4160-volt system provides a reliable source of power to large a-c motors and to 480-volt load centers. During plant operation, power is supplied to buses 24A (A1) and 24B (A2) from the normal station service transformer. Bus ties connect buses 24A (A1) and 24B (A2) to buses 24C (A3) and 24D (A4), respectively. During other periods, such as startup and shutdown when the normal station service transformer is not used, power is supplied from the reserve station service transformer through bus 24G (A7) directly to buses 24C (A3) and 24D (A4) and via the bus ties to buses 24A (A1) and 24B (A2). The 24E (A5) bus may be fed from either bus 24C (A3) or 24D (A4), or from Unit 1 reserve station service transformer or Unit 1 normal station service transformer (backfeeding). ~~or the Unit 1 emergency power source (EDG) through bus 14H. Buses 24C (A3) or 24D (A4) also have the capability to backfeed power to or from the MP-1 safety buses.~~ 99-53 All auxiliary loads (other than the 6.9-kV motors detailed above) are supplied from the 4.16-kV buses. Motors of 250 horsepower and larger are connected directly to the 4.16-kV system; other loads are supplied at 480 volts from 4160-480 volt unit substations; 120/208-volt sources are available by stepping down from 480 volts.

Delete

8.2.2.2 Components

The 6900-volt switchgear for buses 25A (H1) and 25B (H2), and 4160-volt switchgear for buses 24A (A1) through 24E (A5) and Unit 3 buses 34A & 34B is consists of indoor free standing, metal clad units containing vertical lift air circuit breakers and necessary auxiliaries; all located in a Class I structure. Bus sections ~~14H (A6) and~~ 24G (A7) ~~are~~ is similar, except for outdoor service. Overcurrent and motor overload protection is provided by an overcurrent relay with instantaneous attachment, and a ground fault sensor relay on each feeder. 97-126 3/98 97-126

The equipment is all of General Electric Company manufacture, and its principal components are rated as follows:

6900 Volts

Component	Amperes Continuous	MVA Interrupting
Bus	2000	
Feeder breakers, main	2000	500
Feeder breakers, motor	1200	500

4160 Volts

	Buses 24A (A1) - 24D (A4)	Bus 24E (A5)	Buses ~~14H &~~ 24G (A7)	Buses 34A,B,C&D 97-126 3/98 (2/88)
Bus (amp cont)	2000	1200	3000	3000/2000
Main feeder breakers (amp cont)	2000	1200	3000	3000
Other feeder breakers (amp cont)	1200	1200	1200	1200
All circuit breakers (MVA inter)	250	250	350	350

Buses 24C (A3), 24D (A4), and 24E (A5) are emergency buses that supply power to equipment required for ~~an LOCI~~ a LOCA or other ~~incident~~ transient and conform to the requirements for Class 1E equipment. 97-126

Where means exist for manually connecting together redundant load groups, interlocks are provided as directed by Safety Guide 6 to prevent an operator error that would parallel the standby power sources. In addition to electrical interlocks, a Kirk Key Interlock System is utilized on the feeder breakers to bus 24E (A5). This operates on the principle that the key required to close one breaker can be removed from the second breaker only when its locking bolt is in a predetermined (breaker open) position. The key must be removed from one lock before another lock can be operated. 97-126

A test report, dated June 14, 1971, from General Electric on the 4160-volt emergency switchgear contains the following summary of seismic test results:

a. The stresses developed from combined seismic and normal loads do not exceed normal design stresses and are less than the allowable values specified in the American Institute of Steel Construction, Steel Construction Manual.

00-MP2-9

these permissives have not been met within the allowed 8 cycle time frame, the fast transfer scheme will NOT be permitted. In the unlikely case that a phase displacement in excess of a predetermined value exists between the normal and alternate source voltages, PRIOR to the fast transfer signal being generated, the automatic transfer is also prohibited. The transfer to the reserve station service transformer is further prohibited if there is no voltage on its secondary side, or if the source is faulted. The fast transfer scheme has been demonstrated by test to result in a total dead bus time of less than six cycles.

Undervoltage protection for the emergency buses is provided via the Engineered Safety Features Actuation System (ESAS), which is discussed in FSAR Section 7.3. Undervoltage protection consists of two independent schemes (one for each 4160 Volt emergency bus 24C (A3) and 24D (A4)). Relay contacts from the ESAS undervoltage actuation logic provide outputs to control circuits for automatic bus load shedding, and start of emergency diesel generators.

A Level 1 undervoltage actuation (loss of voltage) provides a trip signal to the RSST supply breaker to the emergency bus and the normal to emergency bus tie breaker, initiates breaker trips for automatic load shedding, and provides a start signal for the emergency diesel generator associated with that bus.

A Level 2 undervoltage actuation (degraded voltage) provides a trip signal to the RSST supply breaker to the bus. When a 4160 Volt emergency bus is fed from the RSST during degraded voltage conditions, this breaker trip results in a loss of power to the bus and a subsequent Level 1 undervoltage actuation.

A Level 2 undervoltage actuation does not initiate a trip of the normal to emergency supply breaker and, as such, does not isolate the power supply from the NSST. When a 4160 Volt emergency bus is fed from the NSST during degraded voltage conditions, operator actions are used to prevent damage to safety-related equipment, in accordance with operating procedures.

Both transformers have their low voltage windings grounded, the 6.9-kV winding has its wye neutral grounded through a resistance and the delta 4160-volt winding through a "T" connected grounding transformer and resistor. Both are effective low impedance grounds which will limit ground fault currents to less than 400 and 200 amperes, respectively. All load feeders and bus feeders are provided with ground fault trip protection.

8.2.3.3 Emergency Conditions

When offsite power is not available, redundant emergency diesel generators are available to supply power to the emergency 4160-volt buses. A full description of this power source is given in Section 8.3.

It could be postulated that onsite emergency power is being used following an ~~incident~~ accident because of the lack of availability of power from the Unit 2 reserve station service transformer. To relieve the diesel generator of continued postincident operation in such a case, it is possible (by operator control) to bring offsite power to Unit 2 via bus ~~14H~~ 34A or 34B through the Unit 1 reserve station service transformer, or the Unit 1 normal station service transformer (backfeeding).

A separate feed is provided to the 24E (A5) bus from the Unit 1 reserve station service transformer or Unit 1 normal station service transformer (backfeeding). ~~or the Unit 1 emergency power source (EDG) via Unit 1 bus 14H.~~ This feeder is sized to provide 99-53

sufficient power postaccident to place the unit in a safe shutdown condition or to provide required minimum ~~postincident~~ power requirements. The 24E (A5) bus also serves as a transferable power source for spare units of emergency equipment. It supplies power for the following components:

a. Service water pump P5B
b. Reactor building closed cooling water pump P11B
c. High pressure safety injection pump P41B

The 24E (A5) bus is connected to either the 24C (A3) or 24D (A4) bus. However, both electrical and mechanically operated key interlocks prevent connecting bus 24E (A5) to both bus 24C (A3) and 24D (A4) simultaneously. The same interlock scheme is arranged to transfer the source of control power so that the control power for bus 24E (A5) is from the same redundant system as the control power for the bus to which it is connected. When a piece of equipment is out of service for maintenance, such as the service water pump P5A, its control switch on the main control board will be in the "LOCK-OUT" position (pull-to-lock), and the 24E (A5) bus will be connected to the 24C (A3) bus to allow the spare pump to be energized. The diesel generator load sequencer is so enabled through interlocks with the bus 24E (A5) tie breakers that pump P5B will start on a safety injection actuation signal (SIAS) in place of pump P5A.

Delete

~~A grounding transformer is provided on the 24E (A5) bus to provide a high impedance ground for the Unit 2 system when the Unit 1 reserve station service transformer is supplying the 24E (A5) bus.~~

8.2.3.4 Startup, Shutdown and Refueling

For conditions of normal startup, shutdown, or refueling of the unit, all station auxiliary power is supplied from the 345-kV network through the Unit 2 reserve station service transformer or through the NSST via the Main Generator Step-up Transformer with the generator links removed.

8.2.4 Availability and Reliability

8.2.4.1 Special Features

Safety related components are duplicated and their power supplies and distribution systems are arranged to ensure that neither a failure of a bus, nor the failure of equipment connected to a bus (including the diesel generator), will prevent proper operation of the safety related systems.

Insert 8.2.4.1

The normal and reserve station 3 service transformers are physically separated. The Unit 3 1 reserve transformer and Unit 1 normal station service transformer are also physically isolated from the other two and are fed from different positions in the switchyard than the Unit 2 reserve transformer. An interconnecting 4160-volt ~~feeder~~ crossfie between Unit ~~1 bus 14H~~ 3 and Unit 2 bus 24E (A5) provides an alternate power source from Unit 1 reserve station service transformer or the Unit 3 1 normal station service transformer (backfeeding). ~~of the Unit 1 emergency power source (EDG).~~ Delete Delete 99-53

The 24A (A1) and 24B (A2) 4160-volt buses supply loads required for normal operations while 24C (A3) and 24D (A4) provide power to vital equipment including vital 480-volt a-c load centers necessary for emergency shutdown or for incident conditions. Buses 24C (A3) and 24D (A4) serve redundant systems. The vital auxiliaries supplied from either bus

00-MP2-9

Insert 8.2.4.1

When the Unit 3 RSST is out of service, the Unit 3 NSST connection must be credited as the Unit 2 alternate offsite source. A single failure of breaker 13T in the 345kV switchyard would cause simultaneous loss of both Unit 2 offsite sources, and therefore breaker 13T and associated disconnect switches must be maintained "open" when this situation exists. The capacity and capability of the Unit 2 immediate offsite source is unaffected by this action.

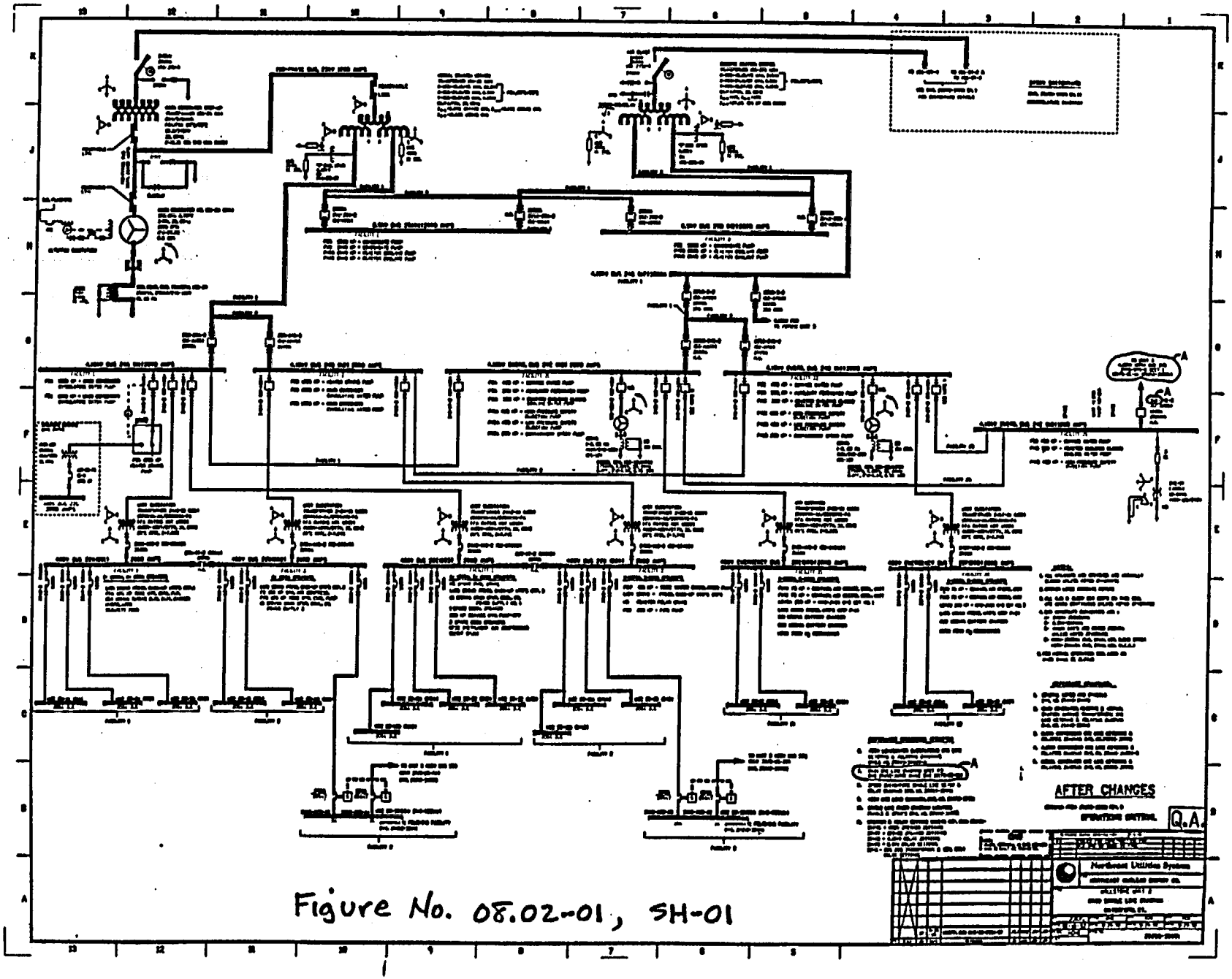

Figure No. 08.02-01, SH-01

08-1112-9

Alarm set points based on the limits established by 10 CFR Part 20, will result in alarm annunciations in the control room and at the monitoring site.

9.4.3.3 Shutdown

The RBCCW system is required for continuous operation during normal unit shutdown cooling (Section 6.3) beginning 3.5 hours after the start of unit shutdown. The RBCCW system supplies cooling water to the shutdown heat exchangers to cool the reactor coolant from 300 to 130°F in 24 hours.

During normal shutdown, such as for refueling, two RBCCW pumps and two RBCCW heat exchangers are used for cooling. The heat load per RBCCW heat exchanger is 84.1 x 10^6 Btu/hr (header 'A') and 84.5 x 10^6 Btu/hr (header 'B') at 3.5 hours after start of Unit shutdown. The RBCCW heat exchanger discharge is less than 130°F when the RBCCW heat exchangers are cooled by service water at a maximum temperature of 75°F. At 27.5 hours after the start of Unit shutdown, the heat load per RBCCW heat exchanger is reduced to 40.8 x 10^6 Btu/hr.

If one RBCCW heat exchanger or pump should malfunction, the spare can be immediately placed in service, or the unit can be cooled down at a slower rate with one heat exchanger and one pump. During shutdown the operation of the RBCCW system is monitored as described in Subsection 9.4.3.1.

9.4.4 Availability and Reliability

9.4.4.1 Special Features

The components of the RBCCW system are designed to general design requirements including seismic response as described in Section 6.1. All components are protected from missile damage and pipe whip from high pressure piping as described in Section 6.1.

Unit 3 bus 34A or 34B

To ensure pump availability, each RBCCW pump motor is supplied from a specific 4160-volt bus. The buses may be powered from alternate sources (i.e., NSST, RSST, D/G, or via Unit 1 bus 14H). In the event that reserve station service power is lost, the RBCCW pumps, required for engineered safety features systems cooling or normal shutdown cooling, are automatically supplied by the emergency buses.

The RBCCW pump motor is designed to withstand a maximum temperature of 155°F during a LOCA and maximum relative humidity of 100 percent.

The RBCCW system is provided with a radiation monitor to alarm if radioactive fluids leak into the RBCCW.

A failure mode analysis is given in Table 9.4-2. These failure modes are considered initiating events in normal plant operations. Passive failures of the system are not considered concurrent with an accident. (99-

9.4.4.2 Tests and Inspection

One RBCCW pump was shop tested for hydraulic performance. Seven test points were used to generate the performance curve which is shown in Figure 9.4-7.

Docket Nos. 50-336
50-423
B18199

Attachment 4

Millstone Nuclear Power Station, Unit Nos. 2 and 3

License Amendment Request
Proposed Revisions to Final Safety Analysis Reports
4160 Volt Cross-Tie of MP3 to MP2
Marked Up Pages of the MP3 FSAR

coolant loop piping in pressurized water reactors. This rule obviates the need for the above exemption.

Structures, systems, and components important to safety are classified as QA Category I and are designed in accordance with the codes and classifications indicated in Section 3.2.5.

Chapter 3 provides the details of the environmental activities and dynamic effects to which the structures, systems, and components important to safety are designed.

3.1.2.5 Sharing of Structures, Systems, and Components (Criterion 5)

Insert 3.1.2.5A

Criterion

"Structures, systems, and components important to safety shall not be shared among nuclear power units unless it can be shown that such sharing will not significantly impair their ability to perform their safety functions, including, in the event of an accident in one unit, an orderly shutdown and cooldown of the remaining units."

Design Conformance

The system important to safety and shared by Millstone 1, 2, and 3 is the radioactive gaseous waste system discharge stack described in Section 11.3. The sharing of the discharge stack causes no safety impairment of the three units.

Other facilities and systems not important to safety within the definitions of GDC 5, but which are shared by the three units are:

1. Environmental monitoring systems
2. Machine shops
3. Offsite transmission lines and switchyard
4. Office buildings
5. Roadway access
6. Railroad access
7. General warehouses
8. Fire protection system
9. Potable (Waterford) water
10. Warehousing facility houses the Millstone 2 condensate polishing system, the Millstone 2 and 3 (removed from service) condensate demineralizer radioactive liquid waste systems. The Unit 2 condensate polishing solid

Insert 3.1.2.5B

Insert 3.1.2.5A

The following equipment may be shared and utilized by Millstone Unit 2 to meet its GDC 17 requirements for an alternate offsite source to relieve one of its emergency diesel generators and supply power to minimum post-accident loads:

1. Main Transformers 15G-3X-A and 15G-3X-B

2. Normal Station Service Transformer 15G-3SA

3. Reserve Station Service Transformer 15G-23SA

The sharing of this equipment does not impair its ability to perform its safety function. The transformers are adequately sized and have the sufficient capacity to meet maximum postulated Unit 3 loading requirements while supplying Unit 2 GDC 17 minimum loads.

Insert 3.1.2.5B

11. Alternate AC (SBO) Diesel Generator (shared by Units 2 and 3)

3.1.2.17 Electric Power Systems (Criterion 17)

Criterion

"An onsite electric power system and an offsite electric power system shall be provided to permit functioning of structures, systems, and components important to safety. The safety function for each system (assuming the other system is not functioning) shall be to provide sufficient capacity and capability to assure that (1) specified acceptable fuel design limits and design conditions of the reactor coolant pressure boundary are not exceeded as a result of anticipated operational occurrences and (2) the core is cooled and containment integrity and other vital functions are maintained in the event of postulated accidents."

"The onsite electric power supplies, including the batteries, and the onsite electric distribution system, shall have sufficient independence, redundancy, and testability to perform their safety functions assuming a single failure."

"Electric power from the transmission network to the onsite electric distribution system shall be supplied by two physically independent circuits (not necessarily on separate rights of way) designed and located so as to minimize to the extent practical the likelihood of their simultaneous failure under operating and postulated accident and environmental conditions. A switchyard common to both circuits is acceptable. Each of these circuits shall be designed to be available in sufficient time following a loss of all onsite alternating current power supplies and the other offsite electric power circuit, to assure that specified acceptable fuel design limits and design conditions of the reactor coolant pressure boundary are not exceeded. One of these circuits shall be designed to be available within a few seconds following a loss-of-coolant accident to assure that core cooling, containment integrity, and other vital safety functions are maintained."

"Provisions shall be included to minimize the probability of losing electric power from any of the remaining supplies as a result of, or coincident with, the loss of power generated by the nuclear power unit, the loss of power from the transmission network, or the loss of power from the onsite electric power supplies."

Design Conformance

Two connections to the offsite power system are provided. The preferred offsite connection is a backfeed through the main and normal station service transformers with the generator breaker open. The alternate offsite connection is through the reserve station service transformers. Each offsite source has 100 percent capacity for all emergency and normal loads during all phases of operation. Insert 3.1.2.17

Two onsite power systems are provided. Each system has an emergency diesel generator. Each diesel generator has 100 percent capacity for the emergency loads in the event of the postulated accidents or required for reactor cooldown.

The design of the electrical system (Chapter 8) conforms to Criterion 17.

Insert 3.1.2.17

plus the capacity to supply Millstone Unit 2 GDC 17 requirements through the NSST or RSST as an alternate offsite source for minimum post-accident loads.

00-MP3-8

97-568 1/98

In the early 1990's, following years of evolutionary changes to the generation and transmission facilities throughout New England, two additional Special Protection Systems were installed in the Millstone Switchyard. These two additional Special Protection Systems (SPS) have been installed to prevent instability following the normal and extreme contingencies of the Northeast Power Coordinating Council's (NPCC) "Basic Criteria" that could occur in the vicinity of Millstone when all critical system elements are in service. The additional SPS are the Double Line Trip Detector and the Failed Breaker Detector, collectively referred to as DBURS (see Section 8.2).

8.1.4 Onsite Electric System

Insert 8.1.4A

The onsite electric system consists of the normal and emergency systems (Section 8.3 and Figure 8.1-1).

During normal operation, ac power (Section 8.3.1) is provided to the normal and emergency systems through the normal station service transformers, which are connected to the main generator by isolated phase bus ducts. The normal station service transformers have adequate capacity to supply all normal auxiliaries and those emergency auxiliaries (both load groups) required during normal operation, up to the full output of the main generator. Upon loss of power from the generator, the generator breaker is opened to ensure continuous power service to the auxiliary buses. Upon loss of power from a normal station service transformer, an automatic high speed transfer to the respective reserve station service transformer is provided to ensure continuous power service to the 6.9-kV equipment and the 4.16-kV electrical system.

(94-28) 10/94

Insert 8.1.4B

During startup or shutdown, each of the preferred power sources (normal and alternate offsite) has adequate capacity to supply all normal auxiliaries required for an orderly shutdown together with emergency auxiliaries (both load groups) required for a safe shutdown.

The reserve station service transformers also have adequate capacity to supply normal auxiliaries and those emergency auxiliaries (both load groups) if required during normal operation up to the full output from the main generator. Insert 8.1.4C

The standby power sources provide ac power to the emergency systems for safe shutdown when the offsite power sources are unavailable. The standby power sources consist of two independent and redundant ac power emergency generators driven by separate diesel engines. Each standby emergency generator has adequate capacity to supply emergency auxiliaries required (one load group only) for a safe shutdown.

Insert 8.1.4D

The AAC provides power of a Station Blackout in Unit 3 or Unit 2 whereby to that equipment required to remove residual heat from the Reactor Coolant System in the event both the offsite power system and the respective standby power system is not available. The AAC consists of a SBO diesel generator and its support equipment (battery, inverter, computer, ventilation, etc.) adequately sized to power equipment required to maintain the plant in a safe condition in the event both the offsite power system and standby power system are unavailable for up to eight hours.

The turbine generator has been designed to allow control from the load dispatching center. However, the unit is always controlled by the operator at the main control board.

Insert 8.1.4A

plus the capacity to supply Millstone Unit 2 GDC 17 requirements as an alternate offsite source for minimum post-accident loads.

Insert 8.1.4B

When the Unit 3 RSST is out of service, the Unit 3 NSST connection must be credited as the Unit 2 alternate offsite source. A single failure of breaker 13T in the 345kV switchyard would cause simultaneous loss of both Unit 2 offsite sources, and therefore breaker 13T and associated disconnect switches must be maintained "open" when this situation exists. With breaker 13T "open," and the Unit 3 RSST out of service, a fault on the Millstone-Southington 345kV line would cause a Unit 3 loss of offsite power.

Insert 8.1.4C

plus the capacity to supply Millstone Unit 2 GDC 17 requirements as an alternate offsite source for minimum post-accident loads.

Insert 8.1.4D

The AAC (SBO) diesel generator is also adequately sized and credited to supply Millstone Unit 2 with alternate AC power in the event of fire in specifically identified Unit 2 Appendix R fire areas.

A Station Blackout is postulated to occur in only one unit and is not assumed to be coincident with a fire in either unit.

During normal operation, power is supplied through the normal station service transformers from the unit generator via the isolated phase bus duct, with the generator breaker closed. Normal station service transformer A supplies power to normal 4.16 kV buses 34 A and B. Normal station service transformer B supplies power to normal 6.9 kV buses 35 A, B, C, and D.

The normal station service transformers have the capacity to supply normal auxiliaries and those emergency auxiliaries (both load groups) required during normal operation up to the full output of the main generator. Insert 8.3.1.1A

97-39 5/97 In the event of a unit trip (i.e. turbine, reactor, or generator trip), the generator breaker opens (5 cycles), thus ensuring continuous power to buses 34 A and B and 35 A, B, C, and D via the normal offsite power source through the normal station service transformers (Section 8.1).

In the event of loss of the normal offsite power source, the alternate offsite power source supplies power through the reserve station service transformers from the 345 kV switchyard. Reserve station service transformer A supplies power to emergency buses 34C (Train A) and 34D (Train B). Reserve station service transformer B supplies power to normal 6.9 kV buses 35 A, B, C, and D. Upon loss of the normal offsite source of power, an automatic high-speed transfer is initiated to the alternate offsite source, thus ensuring continuous power to buses 34A and B and 35 A, B, C, and D.

(9-28) 10/94 97-39 (9-28)

Both the normal and alternate offsite power sources have the capacity to supply normal auxiliaries required for an orderly shutdown together with emergency auxiliaries (both load groups) required for a safe shutdown.

Both the normal and alternate offsite power sources have the capacity to provide unit startup power.

The normal 6.9 kV bus systems consist of four independent 6.9 kV buses. The normal 4.16 kV bus system consists of two independent 4.16 kV buses.

The four normal 6.9 kV buses 35A, 35B, 35C, and 35D are each rated 2,000 amp at 6.9 kV. The two normal 4.16 kV buses 34A and 34B are each rated 2,000 amp (with incoming sections rated 3,000 amps) at 4.16 kV.

Each of the normal 6.9 kV and 4.16 kV buses are housed in separate indoor metal-clad switchgear assemblies. The supply and feeder air circuit breakers are electrically operated drawout types with stored energy mechanisms.

Power is supplied to the normal 6.9 kV and 4.16 kV buses through four stepdown transformers, of which two are normal station service transformers and two are reserve station service transformers. Each transformer is fully rated to carry all the loads on its buses during normal operation and any postulated design basis accident. Insert 8.3.1.1B

The normal 480V system consists of 15 independent 480V load centers and 35 independent 480V motor control centers. The normal 480V load centers are rated at 1000 kVa each. The motor control centers are rated 600 amp at 480V each.

Insert 8.3.1.1.1A

plus the capacity to supply Millstone Unit 2 GDC 17 requirements as an alternate offsite source for minimum post-accident loads.

Insert 8.3.1.1.1B

plus to carry Millstone Unit 2 minimum post-accident loads to satisfy GDC 17 requirements as a Unit 2 alternate offsite source.

The Class IE ac power system consists of two completely redundant and independent load groups with regard to both power sources and associated distribution systems. Two emergency 4.16 kV switchgear buses are provided along with eight emergency 480 V load centers, 13 emergency 480 V motor control centers.

97-39 5/97

These emergency load groups constitute two segregated and nonparalleled divisions of safety-related power supply to all the engineered safety features electrical systems.

1. Class IE 4.16 kV System - The Class IE 4.16 kV system indicated on Figure 8.1-1 consists of two redundant emergency buses. The emergency buses 34C and 34D are each rated 2,000 amp with incoming sections rated 3,000 amp. Each bus can be supplied from normal station service transformer A, reserve station service transformer A, or an emergency generator.

   During normal operation, power is supplied through the normal station service transformer A from the unit generator via the isolated phase bus duct, with the generator breaker closed. Normal station service transformer A supplies power to emergency 4.16 kV buses 34C (Train A) and 34D (Train B), via normal buses 34A and 34B, respectively. Normal station service transformer A has the capacity to supply 4.16 kV normal auxiliaries and those emergency auxiliaries (both load groups) required during normal operation up to the full output of the main generator. Insert 8.3.1.1.2.1A

97-39

   In the event of a generator trip or turbine trip (with low vacuum, high vibration, or excessive thrust bearing wear), the generator breaker opens (5 cycles). In the event of a reactor or turbine trip (other than that described above), there is a 30-second time delay before the generator breaker trips open. This time delay aids in preventing turbine overspeed. In either event, continuous power to buses 34C (Train A) and 34D (Train B) via the normal offsite power source is ensured.

97-39

   In the event of loss of the normal offsite power source, the alternate offsite power source supplies power through the reserve station service transformer A from the 345 kV switchyard. Reserve station service transformer A supplies power to emergency 4.16 kV buses 34C (Train A) and 34D (Train B). Upon loss of the normal offsite source of power, an automatic high-speed transfer is initiated to the alternate offsite source, thus ensuring power to buses 34C (Train A) and 34D (Train B).

97-39 (94-28 10/94)

   In the event the high-speed transfer to the alternate offsite source fails, a slow-speed transfer (bus voltage less than approximately 30 percent) is initiated to the alternate offsite source. Prior to initiating slow-speed transfer, the bus tie breakers between buses 34C (Train A) and 34A, and 34D (Train B) and 34B are tripped.

97-39

   Provisions are also made for manual transfers.

   Both the normal and alternate offsite power sources have the capacity to supply emergency auxiliaries (both load groups) required for a safe shutdown together with normal auxiliaries required for an orderly shutdown. Insert 8.3.1.1.2.1B

Insert 8.3.1.1.2.1A

plus the capacity to supply Millstone Unit 2 GDC 17 requirements as an alternate offsite source for minimum post-accident loads.

Insert 8.3.1.1.2.1B

plus the capacity to supply Millstone Unit 2 GDC 17 requirements through the NSST or RSST as an alternate offsite source for minimum post-accident loads.

(97-39 5/97) Light Water Reactors" which provides guidance that is in large part identical to the RG 1.155 guidance and is acceptable to the NRC staff for meeting these requirements.

In order to meet coping duration requirements of Reg. Guide 1.155, an Alternate AC (AAC) power source was installed. This AAC power source meets the criteria specified in Appendix B to NUMARC 87-00 and is available within 1 hour after the onset of an SBO event (see Section 8.3.1.1.7).

8.3.1.1.6 Alternate AC System Description

(97-38 4/97) (97-39) (97-38) The AAC Source is a 2,260 kW, 3-phase, .8 power factor, 60 Hz, 4160 VAC Diesel Generator which can provide power to either of the MP3 4.16 kV emergency buses via the normal buses. The AAC provides a backup to the Emergency Diesel Generators and satisfies the requirements of 10CFR50.63, RG 1.155, and NUMARC 87-00 for coping with an SBO event.

← Insert 8.3.1.1.6

(97-39) (97-38) 97-584 1/98 The AAC Source is comprised of a stand alone Diesel Generator Unit. The supporting equipment includes: a DG unit; a 3,000 gallon capacity fuel tank, a motor control center to power auxiliary fans, motors, pumps, starting air compressor; a switchgear center for protective relays and output breaker control; and a microcomputer for monitoring and alarming all AAC functions. Figure 8.3-9 provides an interconnection diagram of the AAC system and the 4,160 VAC system.

(94-12) There are four 4.16 kV buses on MP3 (see Figure 8.3-9); two buses (34A, 34B) are normal buses; two buses (34C, 34D) are emergency buses. The AAC output breaker ties to either Buses 34A, ~~or~~ 34B. The normal buses feed its corresponding emergency buses by a Class 1E tie breaker. Control for closing feeder breakers to the 34A and 34B buses is available at main control board and/or locally at the switchgear. Closure and trip control for the AAC supply breaker is only available at the AAC switchgear; however, indication of the AAC breaker status is available both at the Main Control Room and the AAC switchgear.

The generator is a synchronous 60 Hz, a 3-phase generator, at 4160 VAC with a power output rating of 2260 kW continuous, 2486 kW at a 2,000 hr rating, or 2574 kW at a 168 hour rating. The SBO DG loading calculation credits the 2574 kW rating. (97-38)

A totally enclosed, non-ventilated, dry type, indoor station service transformer is provided in the switchgear enclosure to power all the diesel generator related auxiliaries. The transformer is designed for 180 kVA, 4160 V, 3-phase, 3-wire delta connected primary and a 480 V, 3-phase, 3-wire, wye connected secondary. (97-39)

A motor control center is provided in the diesel generator enclosure and contains all the motor starters, contactors, and breakers for the auxiliary equipment. The MCC is rated at 600V, 3-phase, 60 hertz, with ground bus and is operated at 480V. (97-39)

A microprocessor, based control system is included in the switchgear enclosure to initiate alarms and shutdown sequences. It is battery backed via a separate 3 kVA UPS to allow diesel starts up to one-hour after an SBO. (97-38)

Insert 8.3.1.1.6

The AAC can also provide power to Millstone Unit 2 in the event of a Station Blackout at that unit by means of a 4160 volt cross tie between the AAC output breaker and Unit 2 Bus 24E. The AAC is also credited to supply alternate AC power to Unit 2 via the same tie in the event of a fire in specifically identified Unit 2 Appendix R areas.

A Station Blackout event is assumed to occur in one unit only (Unit 2 or Unit 3) and is not assumed to be coincident with a fire in either unit.

Automatic engine generator shutdown is initiated by any of the following shutdown conditions: (97-38 4/97)

- Low lube oil pressure
- High lube oil temperature
- High cooling water temperature
- Engine overspeed
- High crankcase pressure
- Generator or excitation system protective relay trip
- Generator shutdown
- Generator differential

During emergency operation, the shutdown conditions listed below will be bypassed in the shutdown control logic. An alarm for the abnormal condition will still be present to alert the operator of the alarm condition. Bypassed shutdowns in emergency operation are: (97-38)

- High lube oil temperature
- High cooling water temperature
- High crankcase pressure (94-12 6/94)

An annunciator is mounted in the switchgear and alarms the approach of abnormal conditions, pre-alarm trip conditions, alarm trips, signal sequence faults, and provides status indications.

The Switchgear enclosure contains a 125 VDC battery and charger. This battery assembly provides power to the DC auxiliary motors and the protection relays to allow starting the Diesel/Generator during an SBO event. (97-38)

The engine fuel system includes a 3,000 gallon fuel oil day tank, oil day a 15,000 gallon fuel oil storage tank, fuel injectors, and an engine driven fuel pump. The fuel tank is in a separate enclosure, partially mounted below ground to protect from vehicle or mechanical damage and to provide a concrete fuel vault at the AAC system low point to collect any potential spills. The fuel oil storage tank is a separate above ground tank with an integral containment dike.
The 3,000 gallon fuel oil day tank will provide a supply of fuel to exceed the 8-hr SBO required run time. The 15,000 gallon fuel oil storage tank will provide a supply of fuel to exceed the 72-hr run time required by Millstone 2 Appendix R. (97-38)
The external engine cooling system consists of a water expansion tank, radiator, temperature regulating valve, lube oil cooler, immersion heater, temperature control manifold, and gauges.

Engine cooling is accomplished by means of two electric motor driven fans which draw air in from below and discharge through the radiator core. The radiator and expansion tank is mounted on top of the diesel generator unit enclosure. Coolant temperature is controlled during engine operation by an automatic thermostatic valve. (97-58 1/98)

Engine temperature is kept ready for starting at all time by a 24 kW coolant immersion heater. The heater is thermostatically controlled to maintain coolant temperature. (97-3 5/97) (97-3

Ventilating fans are mounted on top of the generating unit enclosure to push radiated heat from the unit. Intake air for ventilation enters through louvered sound hoods in a cupola and exits through louvers adjacent to the air start system.

The engine lubrication system is a combination of four separate systems. The main lubricating, piston cooling and scavenging oil pumps are driven from the accessory gear train at the front of the engine. A motor driven oil pump is used for the turbocharger during standby. 97-584 1/98

The engine starting system uses compressed air for starting the engine. The starting system consists of air start motors, air receiver tanks, air compressor, strainers, starting air solenoid valves, air start valves, air line lubricators, shutoff valves, and pressure reducer regulators. Two starting banks are simultaneously used, one on each side of the engine, for maximum reliability. Each bank consists of one receiver supplying two air start motors. (97-39 5/97) 97-584

8.3.1.1.7 Alternate AC Design Criteria and Compliance

The following sections detail Northeast Utilities compliance to the requirements listed in Appendix B of NUMARC 87-00. For brevity, each criteria is listed in an abbreviated, but technically complete form.

(94-12 6/94) B.1 Criteria

The AAC system and its components need not be designed to meet Class 1E or safety system requirements. If a Class 1E EDG is used as an Alternate AC power source, this existing Class 1E EDG must continue to meet all applicable safety related criteria.

B.1. Response

(97-38 4/97) The AAC system and all its associated components were designed and procured as a non-class 1E system.

B.2 Criteria

The AAC system is not required to be protected against the effects or failure or misoperation of mechanical equipment or seismic events.

B.2 Response

The AAC system is remotely located outside the plant adjacent to the Boron Recovery tank building. It is physically isolated from high energy pipes and rotating equipment. A concrete fuel vault encases the fuel oil day tank to protect against vehicular damage. Although there is no requirement to protect against mechanical failures, The AAC physical location and protective measures to avoid fuel tank ruptures results in a high immunity from mechanical damage.

The supplemental fuel oil storage tank is a separate above ground tank on a concrete slab with an integral containment dike.

B.3 Criteria

The AAC components and systems shall be protected against the effects of likely weather related events that may initiate the loss of offsite power event. Protection may be

00-MP3-8

provided by enclosing AAC components within structures that conform with the Uniform Building Code, and burying exposed electrical cable runs between buildings.

B.3 Response

There are five structures that comprise the AAC system: the diesel generator enclosure; the switchgear enclosure; a hallway enclosure; a fuel building enclosure; an exhaust stack. Each structure is constructed and anchored in accordance with the Uniform Building Code and can withstand hurricane force winds.

Inter enclosure cabling and wiring is protected by cement ductbanks or enclosed weather protected cable runs with each enclosure.

All electrical power cables and control cables are protected from adverse weather conditions by running almost the entire lengths of cables in buried ductbanks. There is, however, a small transition area (about 10 yards) between the RSST ductbank and the AAC ductbank where the cables are run above the ground. For this area, the control cable is run in rigid conduit and the power cable is supported by rigidly mounted cable trays except for a transition area on each end of the cable tray. Each transition area has approximately 4 feet of power cable run in open air.

B.4 Criteria

Physical separation of AAC components from safety related components or equipment shall conform with the separation criteria applicable for the unit's licensing basis.

B.4 Response

Electrical separation for cable, conduit, trays, Class 1E to non-1E equipment is defined in Section 8.3.1.4. The AAC System cabling conforms to Section 8.3.1.4 and does, therefore, meet all separation criteria.

Connectability to AC Power Systems

B.5 Criteria

Failure of AAC components shall not adversely affect class 1E AC power systems.

B.5 Response

The B.5 criteria encompasses the issues of component independence, separation and electrical isolation. Separation is discussed in response B.4; isolation is discussed in response B.6; and component independence is discussed in response B.6.

B.6 Criteria

Electrical isolation of the AAC power shall be provided through an appropriate isolation device. If the AAC source is connected to Class 1E buses, isolation shall be provided by two circuit breakers in series (one class 1E breaker at the class 1E bus and one non-class 1E breaker to protect the source).

B.6 Response

97-506 12/97 The AAC system has a non-1E breaker at the AAC generator output. The AAC output is connected to two non-class 1E buses 34A/B by non-class 1E breakers (3NNS-ACB-AH, BJ). Connection to the class-1E buses (34C, D) is by way of class-1E tie breakers. The AAC system meets the isolation criteria of double isolation using a CAT-1E and non-CAT 1E breaker connected in series.

Insert B.6

B.7 Criteria

The AAC power source shall not normally be directly connected to the preferred or on site emergency AC power system for the unit affected by the blackout. In addition, the AAC system shall not be capable of automatic loading of shutdown equipment from the blacked-out unit unless licensed with such capability.

B.7 Response

97-506 The AAC switchgear logic is interlocked with the AAC output breaker and both AAC tie breakers. In order to connect the AAC to either the 34A or 34B bus, both AAC tie breakers are open allowing closure of the AAC output breaker, then, with no bus voltage present, the AAC tie breaker is closed to the respective 34A or 34B bus. Therefore, the AAC is not directly connected to the plants AC buses unless all other sources of AC are first disconnected.

For an SBO event, the sequencer, which controls the automatic loading of the emergency diesels, will be procedurally reset after the SBO diesel is on line. Operator action will control loading of the AAC.

Minimal Potential for Common Cause Failure

(94-12 6/94) B.8 Criteria

The ACC system will have minimal potential for common cause failure.

1. Independent Battery

2. Independent air start system.

3. Separate fuel oil supply.

4. Evaluation of active failure of EAC if identical to AAC.

5. No single point vulnerability where weather event or single active failure simultaneously fails EAC and AAC.

6. Support systems for AAC independent of preferred power or EAC power.

7. The portion of the AAC power system subjected to maintenance activities shall be tested prior to returning the AAC power system to service.

Insert B.6

The AAC output is also connected to Unit 2 class-1E Bus 24E via the non-class 1E breaker at the AAC generator output and a class-1E breaker (A505) at Bus 24E.

B.8 Response

The AAC system has minimal potential for a common cause failure. Specifically, the AAC system has:

1. An independent battery.

2. An independent air start system.

3. Separate fuel oil supply.

4. The AAC is a diverse design from the emergency diesel system; i.e., different components, different subsystems, different diesels and different generators. Therefore, the possibility of a faulty maintenance procedure affecting both the EAC and AAC is minimized. (94-12 6/94

5. Because the EAC and AAC are physically separated with independent components and subsystems no weather event or single active failure can simultaneously fail the EAC and AAC.

6. All support systems for starting and loading the AAC are powered from dedicated DC batteries within the AAC switchgear enclosure. Once the diesel is up to speed, all auxiliary power to operate fans and motors are derived directly from the AAC generator output through a transformer. (97-39 5/97

Availability AAC - Onset of Station Blackout

B.9 Criteria

The AAC power system shall be sized to carry the required shutdown loads for the required coping duration and be capable of maintaining voltage and frequency within limits consistent with established industry standards that will not degrade the performance of any shutdown system or component.

Insert B.9

B.9 Response

The MP3 coping duration is defined as 8 hours with an AAC activation within 1 hour of an SBO event. The SBO loads are conservatively estimated to be under 2,200 kW while the AAC is capable of a maximum load (168 hr duration) of 2,574 kW.

Technical specification for the MP3 EDG specifies that "the generator voltage and frequency shall be 4160±420 volts" and frequency of "60± 0.8HZ." The AAC voltage is specified by the SBO Diesel manufacturer as 4,160 ± 1% for all steady state loads from no load to full load of 60 HZ ± 1/4%. The AAC voltage and frequency (60 HZ ± .15 HZ) are within the requirements of the MP2 and MP3 4160 volt emergency busses; therefore, the AAC will not degrade the performance of any shutdown system or component. (97-288 8/97 (97-39)

Insert B.9

The MP2 coping duration is also defined as 8 hours with an AAC activation within 1 hour of a Unit 2 SBO event. The estimated Unit 2 SBO loads are within the AAC generator ratings.

00-MP3-8

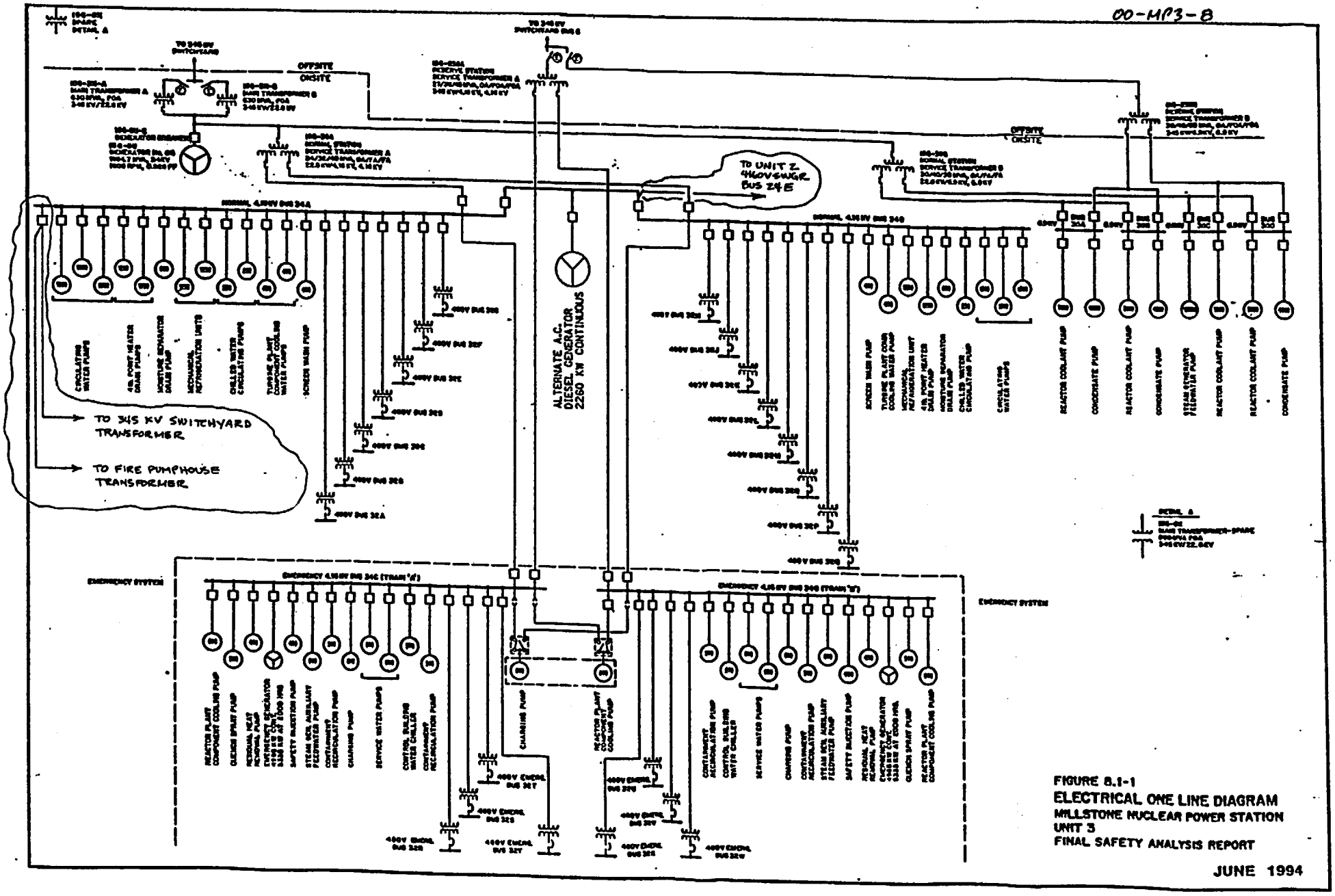

FIGURE 8.1-1
ELECTRICAL ONE LINE DIAGRAM
MILLSTONE NUCLEAR POWER STATION
UNIT 3
FINAL SAFETY ANALYSIS REPORT

JUNE 1994

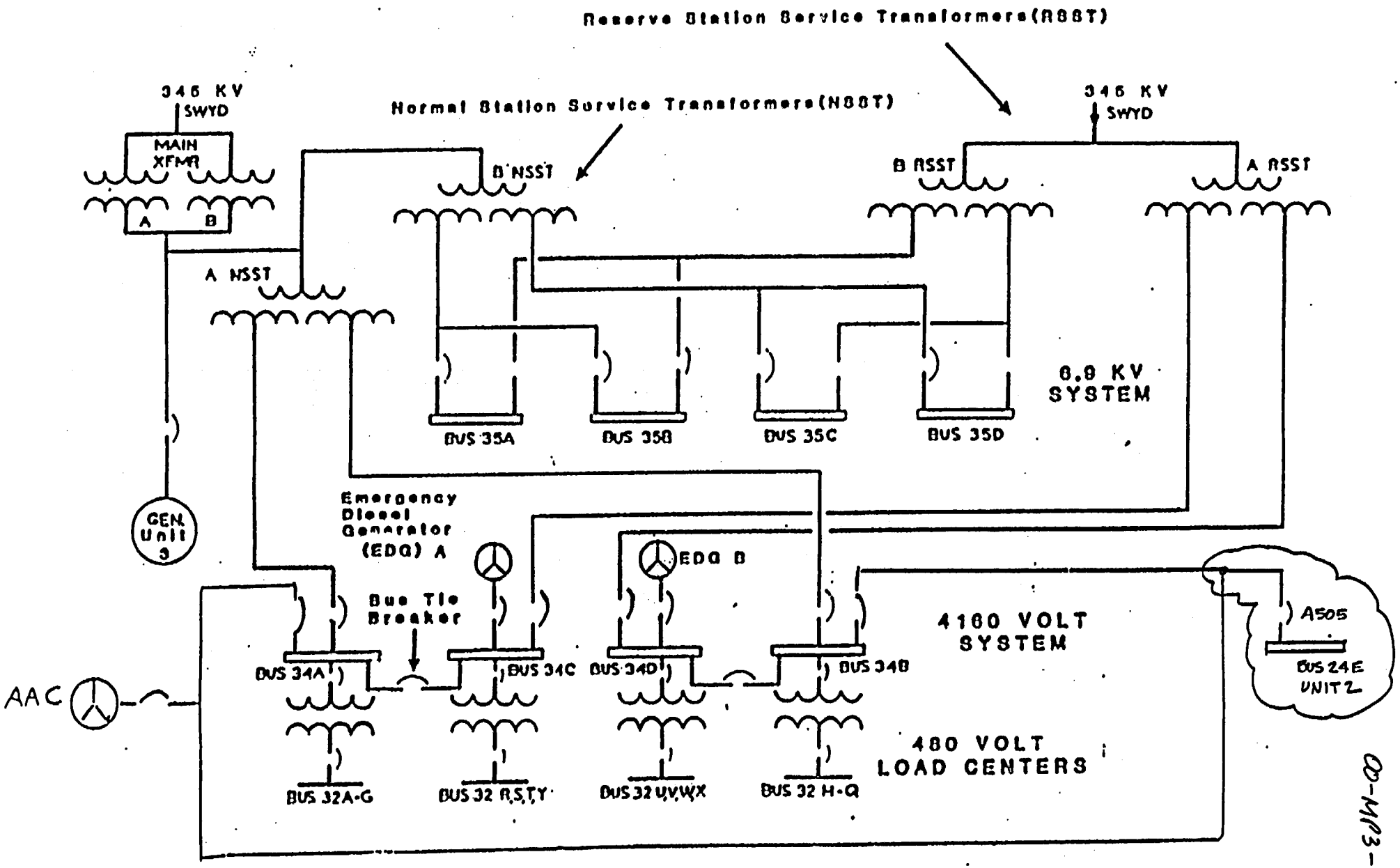

FIGURE 8.3-9
6.9 KV AND 4160 VOLT SYSTEMS

QD-MP3-8