B00000000-01717-4600-00020 REV 00
WBS: 1.2.2.4.2
QA: N/A

Civilian Radioactive Waste Management System
Management & Operating Contractor

WASTE PACKAGE ENGINEERING DEVELOPMENT TASK PLAN

Document Identifier: B00000000-01717-4600-00020 REV 00

September 14, 1993

Prepared for:

U.S. Department of Energy
Yucca Mountain Site Characterization
Project Office
P.O. Box 98608
Las Vegas, Nevada 89193-8608

Under Contract Number
DE-AC01-91RW00134

MANAGED COPY
No: 102171
THIS IS A GREEN STAMP

9410180252 941004
PDR WASTE
WM-11 PDR

Civilian Radioactive Waste Management System
Management and Operating Contractor

WASTE PACKAGE ENGINEERING DEVELOPMENT TASK PLAN

Document Identifier B00000000-01717-4600-00020 REV 00

September 14, 1993

PREPARED BY:

Wayne E. Wallin 9/14/93

W. E. Wallin — Date
Design Engineering, Waste Package Development
B&W Fuel Company, CRWMS M&O, Nevada Site

APPROVED BY:

Thomas W. Doering 9.14.93

T. W. Doering — Date
Design Manager, Waste Package Development
B&W Fuel Company, CRWMS M&O, Nevada Site

APPROVED BY:

Hugh A. Benton 9/14/93

H. A. Benton — Date
Department Manager, Waste Package Development
B&W Fuel Company, CRWMS M&O, Nevada Site

APPROVED BY:

9-14-93

R. M. Sandifer — Date
Manager, MGDS Development
TRW Environmental Safety Systems Inc., CRWMS M&O, Nevada Site

TABLE OF CONTENTS

Page

PREFACE 1
1. PURPOSE 2
1.1 WASTE PACKAGE ACD DESIGN CONCEPTS 2
1.2 WASTE PACKAGE MANUFACTURING PROCESS DEVELOPMENT . . 3
1.3 TECHNICAL REQUIREMENTS DOCUMENTS AND TEST PLANS 4

2. WASTE PACKAGE CONCEPT EVOLUTION 5
2.1 WASTE PACKAGE DESIGN REQUIREMENTS 5
2.2 WASTE PACKAGE CONCEPTUAL DESIGNS 6
2.2.1 Waste Package Materials Selection 7

3. WASTE PACKAGE ENGINEERING DEVELOPMENT TASKS 7
3.1 CONTAINER FABRICATION, INCLUDING STRESS MINIMIZATION 8
3.1.1 Objective 8
3.1.2 Structural Analyses 8
3.1.3 Containment 8
3.1.4 Container Fabrication 9
3.1.4.1 Minimum Radius 9
3.1.4.2 Design Requirements 9
3.1.4.3 Welding Techniques 10
3.1.5 Barrier Material Selection Metallurgical Concerns 10
3.1.6 Stress Minimization 10
3.1.6.1 Fabrication Optimization 11
3.1.7 Fabrication Background 12
3.1.7.1 Stress Corrosion Cracking 12
3.1.7.2 Alloy 825 13
3.1.7.3 Fabrication Processes 13
3.1.7.4 Residual Stress Measurement 15
3.1.7.5 Specifications, Codes, and Standards 15
3.2 REMOTE CLOSURE, INCLUDING WELD-INDUCED STRESS MINIMIZATION 16
3.2.1 Objective 16
3.2.2 Minimization of Weld-Induced Stresses 17
3.2.3 Weld Repair 17
3.2.4 Closure Welding Background 17
3.2.4.1 Automatic Welding Processes 18
3.2.4.2 High Energy Welding 18
3.2.4.3 Narrow-Gap Welding 20
3.2.4.4 Friction or Inertia Welding 21
3.2.4.5 Application of Welding Techniques 21
3.2.4.6 Summary 22

TABLE OF CONTENTS

Page

3.3 NON-DESTRUCTIVE EXAMINATION PROCESS 22
3.3.1 Objective 22
3.3.1.1 NDE Methods 23
3.4 REMOTE IN-SERVICE-INSPECTION 23
3.4.1 Objective 23
3.5 WASTE PACKAGE INTERNAL FILLER MATERIAL 24
3.5.1 Objective 24
3.5.2 Background 25

4. WASTE PACKAGE ENGINEERING DEVELOPMENT PROGRAM 26
4.1 MANUFACTURING DEVELOPMENT: FABRICATION, CLOSURE, AND NDE 27
4.1.1 Engineering Study Task 27
4.1.2 Development Program 28
4.2 INTERNAL BASKET DEVELOPMENT 28
4.3 REMOTE IN-SERVICE-INSPECTION TASK 28
4.4 WASTE PACKAGE INTERNAL FILLER MATERIAL TASK 29

5. DEVELOPMENT PROGRAM MILESTONES AND SCHEDULE 30
5.1 CONTAINER FABRICATION, INCLUDING STRESS MINIMIZATION 30
5.1.1 Inner Barrier and Outer Barrier 30
5.1.2 Internal Basket Development 30
5.2 REMOTE CLOSURE, INCLUDING WELD-INDUCED STRESS MINIMIZATION 31
5.3 REMOTE NONDESTRUCTIVE EXAMINATION 32
5.4 REMOTE IN-SERVICE-INSPECTION 32
5.5 WASTE PACKAGE INTERNAL FILLER MATERIAL INFILTRATION/ UNIFORM DISTRIBUTION 33
5.6 DEVELOP AND TEST FULL SCALE PROTOTYPE 33

6. DEVELOPMENT COSTS 33

PREFACE

The purpose of the Waste Package Engineering Development program is to develop nuclear waste disposal container designs which the Nuclear Regulatory Commission will find acceptable and will license for disposal of spent nuclear fuel and vitrified defense high level waste within a tuff repository. The design of spent nuclear fuel disposal waste packages must consider two options:

1) All spent nuclear fuel will arrive at the repository site as individual fuel assemblies, or
2) Most of the fuel assemblies will arrive at the repository site packaged in sealed multi-purpose canisters and the balance will arrive as individual fuel assemblies.

Disposal of individual fuel assemblies would require a complete disposal waste package comprised of corrosion-barrier container, internal structural support, and neutron absorber. This design configuration is referred to as the waste package. Disposal of a multi-purpose canister would require placement of the sealed canister within a corrosion-barrier container. This design configuration is referred to as the multi-purpose canister disposal container. The container portion of the waste package and the multi-purpose canister disposal container are of similar design, are approximately the same size, and serve the same function, that of isolating the waste for the prescribed period of time. The waste package engineering development program applies to both the waste package and the multi-purpose canister disposal container, and also includes defense high level waste disposal container development.

This document first presents the purpose and requirements of the waste package engineering development for the disposal of spent nuclear fuel and vitrified defense high level waste. The multi-barrier waste package concept evolution is described, and conceptual designs are presented. Comparisons are made between the waste package conceptual designs and the multi-purpose canister disposal container conceptual designs. The objectives, purpose, and background for each of the several engineering development tasks are then presented. The details of each waste package engineering development program task are described. This is followed by the engineering development program milestones, schedules, and costs.

The Waste Package Engineering Development Task is scheduled to begin in fiscal year 1994[1] and will continue through conclusion of the License Application Design phase. This Waste Package Engineering Development Task Plan is to cover the entire engineering development period. Thus, the above list of waste package engineering development tasks will be subject to periodic review by the Management and Operating (M&O) Waste Package Development Department, to verify that the list still meets the waste package development needs. The Waste Package Engineering Development Task Plan will be revised as necessary to accommodate changes in the Waste Package Development Program; the Waste Package Engineering Development Task Plan is a M&O-controlled document and changes to it shall be controlled in accordance with applicable M&O procedures.

---

[1]Yucca Mountain Site Characterization Project Waste Package Plan, YMP/90-62, Rev. 1, March 1993, Program Summary Schedule

1. PURPOSE

This Waste Package Engineering Development Task Plan satisfies the requirement specified in the Waste Package Implementation Plan[2] (WPIP) for a description of planned activities associated with Work Breakdown Structure (WBS) 1.2.2.4.2.

The principal goal of the Advanced Conceptual Design (ACD) phase of the Waste Package Program is to evaluate and develop a set of waste package design concepts that will satisfy the regulatory requirements with a sufficient design and performance margin that the Nuclear Regulatory Commission (NRC) will find that compliance has been demonstrated with reasonable assurance. As part of this development process, evaluation of each waste package concept will be based on both technical feasibility and cost effectiveness of the manufacturing processes (for containment barrier fabrication, closure, and inspection). Designs that will be evaluated for fabrication will include Spent Nuclear Fuel (SNF) and Defense High Level Waste (DHLW). SNF waste package concepts will also include the Multi-Purpose Canister (MPC) disposal container.

The specific engineering development tasks described herein involve test and evaluation of full or reduced-scale sections of various waste package design concepts during the ACD phase. The tasks will focus on key manufacturing uncertainties specific to each design concept. As the manufacturing processes are developed, and as the results of the prototype testing become available, proposed process specifications will be developed and preliminary fabrication drawings generated for each of the selected ACD and License Application Design (LAD) design concepts.

Early in the LAD phase of the program, the evaluation of concepts developed during ACD will be completed and the final two (primary and alternative) waste package designs for SNF and DHLW will be selected. The required manufacturing processes will influence the selection of the designs selected for further evaluation and refinement. Manufacturing studies during LAD will include full-scale prototypes that will be subjected to realistic system-imposed conditions.

1.1 WASTE PACKAGE ACD DESIGN CONCEPTS

The waste package design concepts to be evaluated during ACD are listed in the WPIP. All but one of the concepts are entirely metallic; the other being the metallic/non-metallic multi-barrier concept (ceramic-based or composites). The engineering development tasks will focus on the metallic waste package concepts; non-metallic concepts will be addressed separately herein.

A basket structure is required within the SNF waste package to provide both support and criticality control (there would be no internal structure associated with an MPC disposal container, as the MPC would fit directly within the container). The SNF waste package internal structures will be addressed separately herein. Waste package design concepts for disposal of multiple DHLW glass-containing canisters require a simple internal structure for canister support.

---

[2]Yucca Mountain Site Characterization Project Waste Package Implementation Plan, YMP/92-11, Rev. 0, ICN 1, September 1993

Over the repository lifetime, the waste package containment barriers will perform various functions which will change with time. During the 50-year or more operational period, the barriers will function as the vessel for handling, emplacing, and retrieving (if necessary) the contents of the waste package. This will be followed by the 1,000 year containment period, and then the period of controlled release extending to 10,000 years. During the first 1,000 years following repository closure, the containment barriers will be relied upon to provide substantially complete containment of the radionuclides, and to impede release of radionuclides by aqueous transport from those waste packages have breached. During the subsequent controlled release period. However, breached containment barriers are expected to continue to inhibit transport of liquid water into, and radionuclides out of, the waste packages. The use of a multi-barrier design will result in a lower breach rate over a longer period of time. This will ensure that the release rate limits are met.

1.2 WASTE PACKAGE MANUFACTURING PROCESS DEVELOPMENT

The purpose of the Waste Package Engineering Development tasks is to perform the requisite engineering development and manufacturing process development for fabrication, closure, and inspection of MGDS waste disposal packages. These waste disposal packages will be the variety of waste package and MPC disposal container design configurations put forth for the disposal of both SNF and DHLW. The engineering development tasks will compliment not only the waste package design evaluations, but also the Engineered Barrier Systems and Mined Geologic Disposal System (MGDS) system design and Performance Assessment (PA) evaluations. These tasks will focus on the waste package conceptual design configurations and sizes which evolve from the various discipline studies such as thermal, neutronics, handling and emplacement, etc.

The sizes and wall thicknesses of the containers will require consideration of a range of manufacturing processes, as a result of limitations of those various processes. Similarly, a range of container closure design configurations and welding techniques will also be considered, driven by concerns of weld-induced stress minimization, the possibility of post-weld stress reduction treatment, and by non-destructive examination (NDE) inspection capability and limitations. Technical feasibility and cost effectiveness of the various fabrication and closure concepts will be the focus ~~of~~ the engineering development tasks during the ACD phase of the program. Throughout the ACD and LAD phases, the manufacturing processes and their associated cost will be developed in more detail. During LAD, this work will focus on the final two MPC disposal container and/or waste package designs.

The engineering development process is based on a proven Industrial Engineering process[3]. At present there are five identified Waste Package Engineering Development tasks:

1) Container fabrication, including stress minimization

2) Remote closure, including weld-induced stress minimization

3) Remote nondestructive examination process

4) Remote in-service-inspection

5) Waste package internal filler material infiltration/uniform distribution

The engineering development activities include:

1) Preparation of a Technical Requirements Document for each individual task, including interface requirements

2) Review of manufacturing process facilities and/or engineering test laboratories

3) Approval of Test Plans from manufacturing process facilities and/or engineering test laboratories

4) Technical management of manufacturing process development and testing activities

5) Creation of waste package engineering and manufacturing process specifications, based on results of the development tasks

1.3 TECHNICAL REQUIREMENTS DOCUMENTS AND TEST PLANS

A Technical Requirements Document (TRD) will be created for each of the waste package development tasks. The TRD will describe the task objective, scope, requirements, background, and areas expected to require developmental testing. These development task activities will also include: review of prospective manufacturing process facilities and/or engineering test laboratories, review and approval of test plans submitted by the manufacturing process facilities and/or test laboratories, and subsequent technical management of the process development and testing. The final product of the Waste Package Engineering Development task will be those waste package engineering and process specifications determined to be necessary for the manufacture and inspection of the waste package.

---

[3]Quality Assurance in Research and Development, by George W. Roberts, Babcock & Wilcox, A McDermott Company, copyright 1983 Marcel Dekker, Inc., New York

The engineering development tasks will use the M&O quality assurance process, which at a minimum includes generation of a TRD for each task, and an approved Test Plan (TP) which directly responds to the TRD. As specific waste package design requirements evolve during the MGDS ACD and LAD phases of the program, revision and update of the engineering development task documents will be required. The TRD and TP documents will be subject to amendment as impacted by changes to the Waste Package Engineering Development Task Plan.

2. WASTE PACKAGE CONCEPT EVOLUTION

Due to the evolutionary nature of the MGDS technical information and data necessary to establish firm waste package design requirements, especially in the areas of waste form characteristics and near-field environment surrounding the waste packages, the approach taken to waste package fabrication and closure development will initially be based on parametric studies within limiting or bounding waste package design values. As the program progresses, and waste package design requirements become better defined, it is expected that the study bounds would be narrowed and the level of study detail deepened.

2.1 WASTE PACKAGE DESIGN REQUIREMENTS

The program requirements (WPIP) specify that the principal goal of the ACD phase is to develop a set of waste package designs that will be licensable. Each design concept will be evaluated in detail, to determine the viability of one or more concepts for the SNF and DHLW streams. Early in the LAD phase of the program, the evaluation of concepts developed during ACD is completed leading to selection of the final two (primary and alternative) SNF designs and the final DHLW design. This approach is considered essential in view of the high level of uncertainty in three critical programmatic areas:

1) Actual waste package service environment characteristics,

2) Actual waste form characteristics, and

3) Long term materials behavior prediction capability of the container and waste form.

For example: actual near-field characteristics will not become available until the LAD phase; actual waste form characteristics will be based on known SNFs through the LAD dates, but later SNF inventories, although predicted, will remain uncertain; and, prediction of waste package materials behavior for 1,000 to 10,000 years is a very substantial extension of what will be known up through the LAD phase.

The Code of Federal Regulations (CFR), 10 CFR 60.2, definition of the waste package will be used for this plan. The waste package is defined as: "the waste form and any containers, shielding, packing and other absorbent materials immediately surrounding an individual waste container." The waste package is to be designed, assuming anticipated processes and events, so that containment of the high level wastes within the waste packages will be substantially complete for a period of 1,000 years after repository permanent closure.

The single goal of the program is to develop a disposal system that will be licensable. Each design element, including the waste package, must satisfy the regulatory requirements with sufficient performance margin that the NRC will find that compliance has been demonstrated with reasonable assurance. This goal drives the waste package design effort to consider multi-barrier design candidate concepts that are tolerant to a range of repository conditions. The multi-barrier design concept corresponds to a defense-in-depth approach to design and licensing, an approach which is typically found acceptable by the NRC.

2.2 WASTE PACKAGE CONCEPTUAL DESIGNS

The large multi-barrier MPC/waste package disposal container conceptual designs presently consist of an Alloy 825 inner barrier 0.95-1.25 cm thick, within an A 516 carbon steel outer barrier 10 cm thick (approximate inside dimensions: diameter 120-155 cm; length 460-490 cm for SNF, or 300 cm for DHLW). As an example, a multi-barrier MPC disposal container conceptual design is shown on Figures 1 and 2. An isometric blow-up of an MPC plus disposal container is shown on Figure 3, showing the SNF, basket, MPC shell and closure lids, and the two-layer MPC disposal container. By comparison, an isometric blow-up of a multi-layer waste package is shown on Figure 4, showing the SNF, basket, and two-layer container. Whether a multi-barrier MPC disposal container or a multi-barrier waste package container, the same techniques for fabrication, closure, and inspection would be required.

Each shell of the multi-barrier MPC/waste package disposal container conceptual designs mentioned above is comprised of a rolled and welded cylinder, with a bottom lid welded into place. The shells would be individually heat treated, inspected, and machined as required. The shells would then be assembled one within the other for shipment to the repository site, along with the two closure lids. An alternative design considers the container cylinder to formed from sandwiched plate (the inner barrier integrally clad to the outer barrier). In this case, the bottom lids and closure lids would not be made of sandwiched plate; the inner lids and outer lids would be separate and separately welded into place.

Both lids are shown as flat plates, and each closure weld is indicated as being performed by remote narrow-gap welding, in the interest of using common equipment to perform both the inner and outer closure welds. An alternate weld technique could be used for the thinner inner shell. The conceptual welding technique is chosen as the narrow-gap process because of: applicability to heavy sections, welding speed due to greatly reduced weld volume, and the advanced state of development of remote guidance and control.

The conceptual design sketches shown on Figures 2 and 5 indicate a small clearance between the two barriers, to provide for assembling (nesting) the shells one within the other, and to perhaps facilitate NDE inspection of the inner closure weld. The conceptual design presumes that SNF loading or MPC loading would be performed with the MPC/waste package disposal container in the vertical position, and that the container would remain in the same position for the closure welds. Design of an inner closure joint configuration which could be NDE inspected while

nested within the outer shell is an area of concern; failure to accomplish this design goal would necessitate that the inner shell be partially withdrawn to perform welding and/or NDE inspection. There would be major design implications if it were found necessary to partially withdraw the inner shell, which would include: the inner barrier mechanical and structural design would be significantly impacted, as would be the MPC/waste package loading, closure, and NDE inspection operations.

To maintain integrity of the barrier designs, completely inspected full penetration welds are required for each closure weld. (Outer barrier thicknesses up to 45 cm are also being considered to provide container self-shielding, although in the case of such heavy sections, full penetration welding may not be a requirement.) Stresses resulting from these container closure welds become the greater concern due to the difficulty or inability to perform post-weld stress relief heat treatment.

The conceptual design configuration presently includes an extension of the outer barrier on either end to allow for handling; however, handling design is an interface between waste package design and both the surface and the subsurface design and operations. Therefore, waste package handling design will be a distinct part of engineering development, requiring interaction with the effected groups.

2.2.1 Waste Package Materials Selection

Barrier materials for the conceptual design have been selected for their individual corrosion characteristics: corrosion resistance of the inner barrier, and corrosion allowance for the outer. A major concern for the inner barrier fabrication and closure processes is minimizing manufacturing-induced tensile stresses, due to material susceptibility to stress corrosion cracking (SCC). Alloy 825 is chosen over the 300 series austenitic stainless steels because of its higher nickel content (about 40% versus about 10%), its resulting higher resistance to SCC, and its superior microstructural stability. The outer barrier A 516 carbon steel is chosen on the basis of its slow and predictable rate of corrosion in the range of expected external environmental conditions, and its apparent absence of susceptibility to SCC.

3. WASTE PACKAGE ENGINEERING DEVELOPMENT TASKS

The Waste Package Engineering Development tasks will be described and detailed within this section.

The waste package manufacturing processes will be determined under the Engineering Development tasks. These tasks are generic and will thus apply to any design concept; therefore, the engineering development task descriptions presented herein for waste package fabrication, closure, and inspection will be supportive of, and responsive to the various design concepts as they evolve. It is the lower level documents, the TRDs and TPs, which will tend to be impacted by the given features of specific design concepts. In each of the waste package development tasks, it is expected that full or reduced scale waste package sections will have to be tested and evaluated.

3.1 CONTAINER FABRICATION, INCLUDING STRESS MINIMIZATION

3.1.1 Objective

The objective of the interrelated tasks of fabrication, closure, and inspection is to identify and demonstrate the optimum manufacturing process for container manufacturing consistent with the functional and performance requirements of the application. The solution is complex because the manufacturing method effects the characteristics and properties of the product being produced. The effects must be understood and integrated into the overall program to achieve a selection of both materials and manufacturing methods that meet the design requirements, and perform satisfactorily for 1,000 years and more. Processes selected should be technically conservative to ensure safety and long-term performance. In this regard, manufacturing costs should not impose sacrifices in construction methodology; that is, cost is a concern, but not a top priority.

The objective of this development task is to select and develop fabrication techniques for several waste package container design configurations, with the exception of the lid closures (that subject is addressed separately in Section 3.2), which are technically and economically acceptable and which also may be conditioned during fabrication to minimize stresses. The multi-barrier container configuration is a right cylinder made of two layers of material, probably configured with some integral lifting feature. The two layers may be a cylinder within a cylinder, or a single cylinder made of two-layer clad material. The waste material, whether MPC, SNF, or DHLW, is then placed into the container at the repository site and the lids are installed. The development concerns are the fabricability of the design configurations and their relative cost, plus the need to minimize tensile stresses within the fabricated container.

3.1.2 Structural Analyses

Structural analyses of the waste package will evaluate handling methods which will ensure that the integrity of the waste package is maintained throughout the repository system. The waste package and any integral handling or lifting design features must be durable enough to endure both the surface and subsurface handling loads. Handling design is an interface between waste package design and both the surface design and the subsurface design.

3.1.3 Containment

A major concern regarding the waste package is the establishment of credible evidence and arguments that containment of the high level wastes within the waste packages will be substantially complete for a period of 1,000 years. This is a metallurgical concern, relating both to the waste package internal and external environments, and also to the metal microstructure and level of residual tensile stresses. Findings of ongoing waste package containment materials corrosion testing programs may be expected to have continuing impact upon the materials and manufacturing techniques which will be acceptable for waste package fabrication and closure. The potential future impacts stem from the effects that the metal microstructure and residual tensile stresses have upon susceptibility and/or rate of metal corrosion, which will in turn control and limit choices of manufacturing processes. Primarily, these impacts will effect choice of: material chemistry, raw material form (cast, rolled plate, forged) as well as techniques for metal forming, welding, metal working to change physical shape and/or metallurgy, and heat treatment.

The most likely degradation modes of the metal barriers will be various forms of corrosion and oxidation attack by the environment. The degradation modes can be further affected by the processes by which the barriers are fabricated and closed, and the strains imposed by these processes, and by any internal and external stresses imposed upon the barriers. The materials research and development activities for metal barriers will center around these various degradation modes, with the purpose of discerning which of these degradation modes may be operable, and during what time periods and under what environmental conditions would such degradation modes occur, after permanent closure of the repository.

3.1.4 Container Fabrication

Container fabrication is concerned with the available techniques which may be employed to form the cylinder and to attach the bottom lids (e.g., rolled and welded, centrifugal or static casting, forged and pierced, extruded, hogged out of a billet, etc.). Examples of possible areas of concern relating to container fabrication are given in the following paragraphs.

3.1.4.1 Minimum Radius

The minimum radius to which a plate may be rolled into a cylindrical shape is dependent upon the plate thickness. Presently, a 10 cm plate cannot be rolled into much less than a 150 cm diameter cylinder (conceptual designs are in the range of 120-155 cm); however, the program is currently considering container outer shell thicknesses possibly up to 35-45 cm. Such heavy sections appear to be most economically produced using centrifugal or static casting, but the as-cast product may not be metallurgically acceptable (large grain structure; porosity in sand castings). Undesirable metallurgical properties of the weld seams and heat affected zones (HAZ) include large grain structure, and potentially high residual tensile stresses, both of which need to be overcome. Probably without exception, heat treatment will be required of any container fabricated by whatever techniques, to relieve stresses and to attain satisfactory metallurgical properties.

3.1.4.2 Design Requirements

The waste package design requirements may be expected to change in the future, not only due to technical factors, but due to programmatic changes as well. The choice of outer barrier thickness is an example: some fabrication techniques possible with a 10 cm wall thickness are out of the question for a 35-45 cm wall. The choice of feasible welding methods which may be used for various thicknesses within this range is likewise impacted, especially for closure welds. The need for complete full penetration welding for the heavier wall thicknesses has yet to be established, as the primary purpose of the additional outer barrier thickness (over about 10 cm) is to provide waste package container radiation self-shielding. However, the heavier outer barrier thicknesses would afford longer waste package life if the barrier were to be closed with a full penetration weld.

3.1.4.3 Welding Techniques

It is possible that in the future, use of narrow-gap or other types of arc welding for fabrication may be judged to produce a metallurgically unacceptable product even after available heat treatment. Switching to another welding technique such as electron beam welding (EBW) (a zero-gap weld which requires no filler material, but which must be performed in a vacuum) can in turn place stringent limits on the metal chemistry, such as limiting oxygen content. For example, EBW welding of castings may require that the weld preparation areas be overlaid with a chemically suitable material, or that a chemically controlled safe end be welded to the end of the casting.

3.1.5 Barrier Material Selection Metallurgical Concerns

The main metallurgical concerns relating to choice of the corrosion allowance outer barrier material are: definition of the ranges of external environmental conditions and the related time intervals of such exposure, prediction of rates of corrosion over these given ranges of environmental conditions and times, and establishing the absence of susceptibility to SCC.

The main metallurgical concern relating to choice of the corrosion resistant inner barrier material is resistance to SCC and pitting, as the high alloy materials are nominally very resistant to other types of corrosion. SCC can occur primarily around the welded areas, where undesirable residual stresses, alteration of grain size, and variation of material chemistry may be expected. Remarks in the following section are therefore directed to the inner barrier, so long as it can be established that SCC is not a consequential operative mechanism for the selected outer barrier material.

The waste package metallurgical concern is shared equally between the container fabrication and closure processes; therefore, the following remarks regarding stress mitigation also apply with equal emphasis to the Remote Closure development task (Section 3.2), which follows this task description.

3.1.6 Stress Minimization

A major objective of this development task is to minimize the tensile stresses that are induced during the manufacturing processes, since one form of material degradation, intergranular stress-corrosion-cracking (IGSCC), is aggravated by the level of tensile stress. To minimize this type of material degradation, and thereby increase confidence in waste package containment time, the various components should be in a metallurgically stable and low tensile stress state after fabrication.

This task will develop stress mitigation approaches and techniques that can be applied during the container fabrication and/or closure so as to produce compressive residual stresses, or to minimize the residual tensile stresses. The three development activities and associated objectives are:

1. Fabrication Optimization. The objective is to provide guidance in the development of fabrication and closure technology. The task includes the evaluation of low stress fabrication and closure methods and parameters, stress relief, closure methods, closure joint configurations, and computer modelling relating to the foregoing, to support the performance analysis activities. Threshold levels of tensile stress susceptibility will be determined for anticipated materials of construction.

2. Stress Measurement. The objective is to develop methods that can be used to measure residual stress levels within the waste package components and assembly, in particular following closure welds. The measurement system developed shall be portable and non-destructive, and should require no special environment.

3. Stress Reduction. The objective is to then develop techniques identified in step (1) that can be applied to the container fabrication and to closure, to further reduce the induced tensile stresses.

3.1.6.1 Fabrication Optimization

There are several subjects in the area of fabrication optimization which need to be examined. One example concerns the waste package inner barrier closure weld. Generally, the initiation of IGSCC requires a condition of tensile stresses (a fraction of yield strength) and a corrosive environment. For the case of an inner barrier fusion weld (consisting of built up layers of weld material), and in the absence of any post-weld heat treatment, the resulting weld root would be in compression and the top layers in tension. Investigations might well show that these weld conditions are actually quite acceptable and in fact desirable. That is, the tensile stress zone is located in the weld top and HAZ, which is in the inerted and thus non-corrosive space between the two barriers, whereas the weld root which is under compressive stress is exposed to the waste package contents.

Another area of fabrication optimization which needs to be examined is the degree of waste package container self-annealing stress relief which may be realized due to years of exposure to elevated temperatures resulting from SNF or DHLW decay heat release. On the negative side, elevated temperatures over very long times has been shown to cause sensitization of some austenitic steels to IGSCC.

A second and related area of investigation is the possibility of initially placing the waste package inner barrier in compression, as follows. Should the container cylinder be formed from sandwiched plate (the inner Alloy 825 barrier integrally clad to the carbon steel outer barrier), subsequent heating of the container due to decay heat would tend to put the whole inner barrier layer into compression (since Alloy 825 has a slightly higher thermal expansion coefficient than carbon steel). However, as suggested above, the subsequent years at elevated temperatures could eventually self-anneal the stresses, thereby negating any anticipated benefit of putting the inner barrier in compression. A corollary issue is: in the event that the clad cylinder inner barrier layer stresses should be annealed at elevated temperatures, then the question arises as to whether or not the inner barrier layer would then eventually go into tension, as container temperatures drop below the self-annealing range over the very long times involved.

3.1.7 Fabrication Background

Intergranular corrosion attack and IGSCC are most frequently associated with a sensitized microstructure as a necessary precursor to attack. Furthermore, IGSCC is initiated only at a surface which is under tensile stress. Although normally associated with fabrication steps such as welding, cold working, etc., creation of surface stress conditions can extend to the methods used to produce the surface; for example, aggressive grinding after final annealing can create surface stresses.

3.1.7.1 Stress Corrosion Cracking

Uncontrolled heating from welding during fabrication, assembly, and construction processes may produce a sensitized microstructure. A sensitized microstructure develops when chromium-rich carbides precipitate from solid solution, leaving a region depleted in chromium in the vicinity of the precipitate. This precipitation occurs most frequently along grain boundaries, and it can lead to serious degradation when the precipitates and resulting chromium-depleted zones form a continuous network across the containment barrier thickness. When the sensitized material is exposed to oxidizing aqueous environments, the grain boundary area tends to corrode preferentially, and the attack can proceed along the continuous network of chromium-depleted zones. In the presence of applied tensile stress on a sensitized stainless steel, preferential intergranular attack (IGSCC) will occur under less aggressive environmental conditions than is necessary for the initiation of intergranular attack in the absence of stress. One feature of IGSCC should be given particular attention, and should be exploited if true, namely: can IGSCC indeed be inhibited or avoided altogether so long as the surface which is under tensile stress is only exposed to an inert environment (such as the space between the two barriers).

Transgranular stress corrosion cracking, the case in which transgranular attack predominates over the intergranular component, is a corrosion mode usually associated with a high-chloride-containing environment. This environmental concern is not expected within the repository.

There have been more than 35 years of operating experience with nuclear reactor construction using austenitic stainless steel alloys 304 and 316. For these materials, there is a wealth of experience demonstrating the deleterious consequences of residual material tensile stresses resulting in IGSCC, especially when the stresses are concentrated near the material surface, since IGSCC is initiated at a surface. Residual stresses resulting from manufacture would make a waste package susceptible to IGSCC in an environment of any mildly corrosive atmosphere, liquid, or solid contacting the waste package material. Thus, if surfaces exposed to other than an inert atmosphere could be brought to minimum tensile or possibly compressive stress conditions, IGSCC would be greatly inhibited. Due to this concern, Alloy 825 is being considered as one of the waste package layers, rather than the 300 series stainless steels, as it is less susceptible to IGSCC.

Additional stress-related mechanisms will be active in the waste package, albeit time dependent, such as thermally induced stresses and mechanical loading stresses (both as-placed in the repository, and due to possible rock fall onto the waste package). Analyses will be performed to assess the magnitude of such stresses, and the potential for promotion of IGSCC.

3.1.7.2 Alloy 825

Alloy 825 is considered to be one of the most resistant of candidate materials for the waste package inner barrier to every form of corrosion that might occur in a geologic repository in tuff. Some development work will be needed to ensure it can be fabricated, should this material be finally selected. Care must be taken in welding Alloy 825, as it is purely austenitic and lacks the formation of delta-ferrite in the weld zone; delta-ferrite is desired to soak up harmful impurities such as sulfur that cause hot cracking.

The residual stresses due to either cold working or welding can be reduced to very low levels by stress relief or annealing treatments (Alloy 825 can be solution annealed following welding, although it should not receive post-weld heat treatment[3]). Unfortunately, effective stress relief treatments for austenitic stainless steels are also in the range of temperatures in which sensitization occurs. However, solution anneal is effective in reducing residual stresses to an acceptable level while avoiding sensitization, providing cooling rates from annealing are fast enough and uniform. (Further work is required to define the thermal-mechanical processing for Alloy 825, as apparently it is more sensitive to processing than the austenitic stainless steels[3].) The 300 series of stainless steels have shown immunity to SCC so long as cold working stresses remain below about 10% of yield strength, thus Alloy 825 may also expected to be immune to similar or possibly higher stress levels. Heat treatment of any of these alloys should be in a protective atmosphere or vacuum to avoid scaling of the surfaces.

3.1.7.3 Fabrication Processes

The following fabrication process candidates should be considered for the container inner and outer barriers:

- Formed and welded
- Forged
- Extruded
- Centrifugal casting
- Static casting

Cast, forged, and extrusion processes are not capable of producing a thin walled steel cylinder of less than about 2-3 cm thickness for cylinders of the sizes being considered for the multi-barrier waste package (in the range of 120-150 cm diameter). The waste package inner barrier thickness presently being considered is generally in the range of 1-2 cm, possibly up to about 4 cm. Thus, for the lesser thicknesses, fabrication would be limited to the formed and welded process. Currently, Alloy 825 is not available as a cast product.

---

[3]Fabrication Development for High-Level Nuclear Waste Containers for the Tuff Repository, Phase 1 Final Report, UCRL-15965, by LLNL, September 1990

3.1.7.3.1 Formed and Welded Process

Formed and welded type of fabrication has been discussed above; it is possibly the only viable process for the inner barrier, and it should also be acceptable for the outer barrier providing that the barrier thickness is in the range of about 10 cm. For thicknesses above approximately 10 cm, alternative techniques would be required to form the cylinder.

3.1.7.3.2 Forging Process

Forged cylinders are made by rotary forging of a pierced billet over a mandrel, producing a seamless cylinder. Forging could be used for fabrication of the outer barrier cylinder, but complete machining of the finished piece would be required. The bottom lid would still have to be welded in place and the assembly heat treated in the same fashion as for formed and welded type fabrication.

3.1.7.3.3 Extrusion Process

The extrusion process is not believed to be applicable to fabricate shells of the waste package diameter (in the range of 120-150 cm), whatever the wall thickness, within existing domestic facilities, although such facilities could be established if needed.

3.1.7.3.4 Casting Processes

Centrifugally cast material is produced by pouring molten steel into a spinning, ceramic lined, metal mold. The spinning process produces up to 100 Gs force on the metal as it solidifies, providing a very sound pipe with good concentricity. After removal from the mold, the ceramic waste is removed by rough grinding. The product is then heat treated and machined at least on the inside. The bottom lid would still have to be welded in place, possibly before the original heat treatment.

Static cast shells can be cast with the bottom in place, thus eliminating the bottom weld and weld inspection. However, static cast shells would require complete all-over inspection for defects. Foundries customarily provide complete casting upgrading, if necessary (defect detection, removal, weld repair, and inspection), and could produce waste package outer barrier containers completely heat treated, machined, and inspected. The concerns of static casting are defects due to porosity and inclusions, and the effect of large grain structure upon inspectability of heavier sections.

In order to produce static shells with an integral bottom, the foundry would support the core during pouring on a number of chaplets, short steel rods of the same chemistry as the cast material, which become part of the finished product. A portion of the chaplet OD melts during mold filling which provides a metallurgical bond with the cast material. The technique works so well that the chaplets cannot be located by ultrasonic or liquid penetrant inspection..

3.1.7.4 Residual Stress Measurement

Techniques will have to be developed to measure residual stress levels within the waste package container components and assembly. The measurement system developed will need to be portable and non-destructive, and should require no special environment. Performance of this assignment may be by one of the national laboratories. The residual stress measurement equipment will be applied to both developmental and prototype waste package container hardware to provide a measure of actual conditions to compare with anticipated results.

3.1.7.5 Specifications, Codes, and Standards

Those cost effective waste package fabrication and closure processes which result in significant mitigation of residual tensile stresses will be developed into waste package construction process specifications. These specifications will be developed recognizing and invoking to the extent possible the standard codes of construction.

At the present time, there are no specific codes and standards available for the fabrication of long-term nuclear waste disposal containers. Development of a suitable set of codes will be a requirement of the engineering development program; codes based on industry codes and standards but tailored to the needs of this program. The most frequently used code within the nuclear industry is the American Society of Mechanical Engineers (ASME) Boiler and Pressure Vessel Code (BPVC) for the design and fabrication of pressure boundary components and appurtenances. The code's Section III, "Nuclear Power Plant Components," or Section VIII, "Pressure Vessels," could be used for these purposes.

Within Section VIII, "Pressure Vessels," Division 1, are rules for the fabrication of containers for lethal substances, and this appears to be the most appropriate. This may be selected as the guide to use in evaluating fabrication processes for these containers, because it provides adequate safeguards and proven rules for the fabrication of containers. Although the internal pressure for the container is expected to be small, the use of a code intended for pressure vessels will provide conservative rules for material specifications and fabrication.

Adherence to the ASME BPVC requires that materials used for construction meet the requirements of Section II, "Materials Specifications," and be included within the appropriate application section, in this case, Section VIII, Division 1. In some instances, there are no presently existing specifications for some of the product forms that could be used in fabrication (e.g., Alloy 825 forgings). Where no actual specifications exist, alternative specifications for similar materials will be chosen, or developed if none exist, which could be used if the ASME BPVC rules were to be relaxed to meet the requirements of this program. These could at least be used for interim specifications for making mockups; however, every effort should be made to build the mockups, prototypes, and production containers to the same set of specifications.

3.2 REMOTE CLOSURE, INCLUDING WELD-INDUCED STRESS MINIMIZATION

3.2.1 Objective

The objective of this development task is to select and develop waste package remote closure welding processes which are technically and economically acceptable, and which will also minimize stresses. Viable methods of repairing defective closure welds must also be developed. This remote closure task, as well as the waste package remote NDE inspection task which follows, must be performed in concert with the waste package container fabrication task, due to the strong technical interrelationships between these tasks.

Installation of the waste package closure lids will take place at the MGDS repository surface facility, following placement of the waste within the waste package container. Each of the two closure lids must be separately remotely welded into place and remotely inspected to complete the envelope for each corrosion barrier. The primary development concerns are the combined choice of weld joint configurations and welding techniques to result in lowest possible post-weld tensile stress conditions, and of joint configurations which can be inspected. Various standard industrial remote closure welding processes will be investigated for each of the selected waste package container design configurations (evolved from the previous task). Other areas which must be considered include: quality of the closure welds (weld integrity, and good mechanical properties of the welds and heat affected zones), economy and time involved in making the closure welds (high deposition rate and minimizing amount of weld filler material), fully automatic remote closure welding equipment, the ability to use the same equipment for both the thin inner weld and thick outer weld, the capability of hardening the welding equipment to the anticipated levels of radiation exposure, and viable methods for repair of defective welds or for container replacement if weld repair should be unfeasible.

The fabrication industry is making continual advances in development of fully automatic remote welding equipment and process control to meet the combined challenges of: stricter quality standards, consistent quality and reduced rejection rate, adaptation to computer numerical control, computer monitoring of weld process parameters for quality assurance, cost control and labor cost reduction, improved health and safety standards, increased productivity through improved operating factors, and the expansion of worldwide competition.

This program shares most of the aforementioned challenges. This development task is expected to benefit greatly from recent and near-future automatic remote welding advances, with the expectation that the needed level of technology already exists, or will be available. The implementation and adaptation of that technology to the circumstances of the waste package closure welds is what remains, which is the major endeavor of this development task. The waste package closure circumstances which require complete isolation of the welding activity within a hot cell, plus effects of the radioactive environmental upon the welding equipment, are circumstances which tend to be outside those of the more stringent industrial welding conditions.

3.2.2 Minimization of Weld-Induced Stresses

A major objective of this development task is to minimize the tensile stresses that are induced during the closure welding processes, an even more challenging task than stress minimization for the waste package container. As stated in the prior task (Section 3.1), the listing of stress mitigation approaches and techniques, and the discussion therein, apply equally to this waste package closure task.

To confirm results of any stress reduction endeavor, a means of measuring actual stresses must be developed which is suitable for application to the selected waste package container design configurations. The stated preference that the measurement system shall be portable and non-destructive, and should require no special environment, implies that the system could find use in the waste package production phase following waste package development.

3.2.3 Weld Repair

Upon completion of weld inspection, whether of the inner or outer closure weld, eventually the case will arise that a weld is found to be defective. Weld defects will often be small and localized, amenable to in-place repair, which suggests the desirability of utilizing the original welding equipment to perform the weld repair. Repair techniques and procedures must be developed to deal with such issues as: feasibility of performing in-place weld repair versus removing the unit from the production line, additional equipment needed for repair operations, circumstances which permit weld repair versus those necessitating that the container be dismantled and discarded, and the possibility of salvaging discarded containers. Of particular concern will be the interrelationship between the closure welding techniques and the issues of weld repair.

3.2.4 Closure Welding Background

Metallurgical concerns previously discussed in Section 3.1 apply especially to this task, due to the difficulty, if not inability, to perform post-weld heat treatment of the weld joint(s). Development of techniques that can be remotely applied post-weld to reduce induced tensile stresses may be a daunting task, considering accessibility to the finally selected closure joint configuration, the high radiation environment, and coping with circumstances of the just-filled waste package heat output, rising temperatures, and internal temperature limitations as would be imposed by the waste package contents.

The origin of stresses in the waste package closure region result from the welding process, due both to material heating and to material shrinkage upon cooling. Thus the more potentially rewarding approach will be to choose welding techniques which inherently minimize stresses induced during welding, rather than attempt to relieve stresses post-weld.

3.2.4.1 Automatic Welding Processes

Automated welding processes are now clearly recognized as having desirable features in terms of improved efficiency and output by virtue of increased deposition rates, lower incidence of weld defects, and higher arc efficiency. Several developments have taken place in welding automation in the last few years, and some of these are of particular interest in the heavy fabrication industry, for example:

- Adaptive control
- Off-line programming
- Narrow-gap welding

Adaptive control in welding is a generic term used to describe a range of systems which are designed to measure and correct deviations from the welding system normal performance. A large number of techniques are available for tracking weld seams, adjusting torch height, and controlling penetration. The design of the devices varies from simple mechanically spring loaded profile followers to sophisticated laser video tracking systems. These techniques enable some relaxation in component tolerances and automatic joint location adjustment on large workpieces.

The productivity of robots and computer numerical control (CNC) systems may be improved by off-line programming. Computer simulation of solid 3-D shapes may be generated from computer-aided design data, and animated representations of the welding may be generated. Having demonstrated a suitable program, this may be downloaded to the robot or CNC system.

Automated narrow-gap welding techniques may be applied on thicker sections to reduce joint volumes, control distortion and increase joint completion rates. The high energy welding processes (electron beam, laser, and plasma keyhole welding) are inherently narrow-gap, but arc processes such as submerged arc, metal-inert-gas (MIG), and tungsten-inert-gas (TIG) have been adapted for narrow-gap operation. For heavy sections, the narrow-gap process has the benefit of a greatly reduced weld volume.

3.2.4.2 High Energy Welding

The high energy processes possess some very desirable features, and some that are less than desirable. The electron beam weld (EBW), laser, and keyhole plasma arc weld (PAW) are essentially zero-gap welds and ordinarily require no filler material. The essentially zero-gap feature inherent to these welding processes results in very close tolerance requirements; this could be a problem when emplacing a waste package lid for welding, which may be approximately 150 cm diameter and 10 cm or more in thickness.

PAW keyhole welding would rank high for thinner sections with no filler (up to about 0.65 cm butt joint) and also for thicker sections with a keyhole root weld plus a filled section for weld completion (0.65 cm butt root plus filler to about a maximum of 2.5 cm total thickness). Therefore, PAW would not be suitable for the waste package outer barrier thickness (10 cm or greater).

EBW and laser welding have low heat input and relatively small fusion zones and HAZs, relatively low residual stresses, and fast weld speeds. EBW and laser welding normally require a vacuum chamber, and the laser and electron beam equipment would normally be located outside of the vacuum chamber, requiring that the beams penetrate the vacuum chamber wall at some point. However, laser welding would not be suitable for thicknesses of the waste package outer barrier. EBW can handle the heavier sections, but has the characteristic that perhaps as little as 50% of the beam energy is absorbed in the actual weld zone, creating a situation wherein this blow-through energy must be managed.

High power EBW has been demonstrated to be capable of penetrating over 25 cm of steel, the only high energy process capable of welding waste package outer barrier thicknesses. Due to the problem of EBW blow-through energy, the configuration of the backside of the weld joint customarily requires a heavy backing section to absorb that energy. For example, a "stopper in a bottle" overlapping lid configuration (lid diameter equal to the cylinder outside diameter) results in a circumferential butt weld the thickness of the cylinder wall. This configuration provides integral backing; that is, penetration of the electron beam into the stopper neck would not be detrimental since any weld root discontinuities would be in the non-critical neck region. The potentially harmful weld discontinuities due to the programmed beam fade-out necessary at the end of the weld may be greatly diminished by spiralling the beam upward into the solid upper portion of the lid, after the weld overlap has been reached. This EBW closure approach would work well for the waste package outer barrier.

The inner barrier weld, which may be only one-tenth the thickness of the outer barrier, would not be directly amenable to the same radial EBW welding approach, as the inner barrier is physically down inside the outer barrier. The inner weld would have to be performed in the recessed position within the outer barrier, unless the waste package were to be laid on the side and the inner barrier pulled out a short way to provide radial access for EBW welding. Possibly the inner weld could be performed in the recessed vertical position using a vertical EBW orientation. Concerns would be: repositioning the beam to the vertical, the need to provide backing to the weld, vacuum conditions for the inner weld would result in a vacuum within the waste package rather than the inert atmosphere, and fit up of the lid to achieve a tight joint would be difficult since heating and expansion of the large diameter cylinder would occur as soon the waste was placed in the container. In the instance of placement of MPCs within an MPC disposal container, vacuum conditions within the inner barrier would probably be acceptable; in the instance of placement of SNF, the space within the inner barrier could be backfilled through a small port after completion of the large diameter closure weld. Closure of the small fill port would require a full penetration weld.

Alternatively, the inner barrier weld could be performed in its normal recessed position using another welding technique, one which would not result in a vacuum within the waste package. This may not be an altogether unacceptable approach, as this barrier will be comparatively thin and could be welded in a relatively short time. On the surface, using separate welding techniques for the inner and outer barriers would seem undesirable; however, the objective of this design task is to examine and pursue any and all welding design configurations that may be found to have merit.

EBW has advantages which cannot be easily dismissed: ease of remote application, full penetration capability, speed of closure (e.g., as little as one hour to close a 10 cm waste package outer barrier), no weld wire or flux entering the hot cell, minimal waste generation, a minimum of fumes emitted into hot cell, very narrow virtually parallel fusion zones, and probably results in the minimum stresses achievable with any fusion process for the waste package weld thicknesses.

3.2.4.3 Narrow-Gap Welding

The narrow-gap welding technique is normally associated with steel thicknesses in the range of 2.5 to 30 cm, or even greater. Narrow-gap MIG deposition rates of up to 8 kg/hr have been demonstrated. The narrow gap width (generally 10-20 mm) and the potentially proportionally great depth of the gap have promoted the development of a number of automated process-oriented welding head guidance systems. These already-developed remote automated systems essentially constitute the equipment needed for remote waste package closure welding, except that the equipment would need to be radiation hardened.

Sketches of several waste package narrow-gap welds are shown on Figures 5 and 6. Outer barrier thicknesses of 10, 20, and 45 cm are illustrated; inner barrier thickness is shown as 0.95 cm. In all cases, closure lid thicknesses are somewhat greater than cylinder wall thicknesses, to ensure a weld effective throat thickness to be at least that of the cylinder wall thickness.

Should narrow-gap welding become the selected method for production closures, the welder configuration chosen might be the two-electrode or possibly the strip electrode. Compared to a single electrode, these configurations offer metallurgical advantages in that they result in less heat input into the base metal, and better distribution of that heat.

Another example of an even more advanced narrow-gap welding system has been developed[4], with completely integrated process and guidance control with no external measuring devices, controlled only from measurement information taken directly from the electrical process variables. This system ensures not only correct weld head positioning, but also uniform buildup of weld layers despite changes in gap width (regulation of fill ratio by varying welding speed). The compact welding head structure results in a gap width of only 10 to 15 mm as being adequate for workpiece thicknesses up to 20 cm. The selected single-wire rotating-tube welding method produces an oscillating movement of the arc from side-to-side in the gap. Low-spatter pulsed-arc metal transfer is used, which is suitable over a wide range of operation and also for out-of-position welding. The principal aim of the welding head guidance system is to deduce correcting signals from the electrical process variables, for lateral positioning and distancing of the welding head (the arc itself being used as a feedback transducer to form the distance profile of the

[4]"Process-oriented welding head guidance system for gas-shielded metal-arc narrow-gap welding, "Prof. Dr.-Ing. Friechrich Eichhorn and Dipl.-Ing. Jurgen Borowka, Aachen, West Germany, Welding and Cutting Journal, 11/90

welding spot, as the arc scans the welding site as part of the oscillating movement). The oscillating motion and pulsed-arc allow the arc-on-time profile to be tailored across the gap (e.g., to dwell at the sidewalls to ensure adequate sidewall penetration). The system further claims to results in substantially reduced equipment costs, and reduction of welding downtime due to its integrated process control and quality assurance functions.

3.2.4.4 Friction or Inertia Welding

In previous waste package closure development work, friction or inertia welding was comparatively highly ranked. The Site Characterization Plan-Conceptual Design (SCP-CD) Tuff Repository designs[5] chose friction welding for closure. The Salt Repository design[6] ranked inertia welding high for the outer container closure, but did not finally recommend the process. The SCP-CD design is a single thin-walled canister, while the Salt Repository two-barrier design is similar to the current large multi-barrier waste package design. Both of these designs were generally half the diameter of the large multi-barrier waste package. The Salt Repository design reported the need for 5.4 million kg thrust for inertia welding. By ratio of weld face surface areas, a 10 cm thick outer barrier for the large multi-barrier waste package would require about 8.7 million kg thrust. The Salt Repository report seriously questioned the availability of suitable equipment to produce a weld of that size, so dropped the process from further consideration at that time. Friction welding is not presently viewed as offering much promise for this program.

3.2.4.5 Application of Welding Techniques

Application of the various welding techniques must consider the means of relative movement and manipulation of the welding equipment and/or the waste package. Generally, manipulation of the welding equipment would be preferred due to the massiveness of the waste package; to do this, the equipment itself would have to be within the hot cell. The EBW welding technique discussed earlier mentioned the need for performing the weld in a vacuum chamber. Prior waste package studies located the beam generator outside of the vacuum chamber, and possibly outside the hot cell, in which case the waste package would have to be rotated to perform the closure welds, unless a means is devised of moving the electron beam around the waste package. The application of fusion welding equipment within the hot cell would need to be guided from a circular raceway. Weld wire would need to be fed in a manner compatible with the circular motion of the welding equipment. In any case, the ability of the various welding techniques to properly sense and track the weld joint will be an important attribute to be considered in the welding equipment selection process.

---

[5]Closure Development for High-Level Nuclear Waste Containers for the Tuff Repository, Phase 1 Final Report, UCRL-15964, by B&W R&D Div. for LLNL, September 1988

[6]Remote Closure Weld Recommendations Report, UCRL-15965, Rev. 0, by GE Spent Fuel Technology for Battelle, September 1987

3.2.4.6 Summary

Two different fusion welding categories, EBW and narrow-gap, possess characteristics which suggest potential for producing quality, low stress welds. (Although being the weld technique of choice for the SCP-CD, friction welding is not realistic for the larger multi-barrier waste package containers.) There are many different configurations within the two welding categories which shall have to be examined during this engineering development task. Automatic remote welding guidance, control, and quality assurance monitoring are currently available as a result of welding industry automation developments. The multiple and interrelated concerns of closure weld joint configurations, remote welding techniques, weld-induced stress minimization, and remote weld joint inspectability present a task which must be overcome during this Waste Package Engineering Development task.

3.3 REMOTE NONDESTRUCTIVE EXAMINATION PROCESS

This development task is applicable specifically to the waste package container closure welds.

3.3.1 Objective

The objective of this development task is to select and develop nondestructive examination (NDE) inspection technique(s) that are technically and economically acceptable, and which can accommodate the selected waste package materials, thicknesses, and geometries. As previously indicated, certain closure configurations may be incompatible with available NDE techniques, thus this task must be performed in concert with waste package closure configuration design activities. The NDE technique(s) finally chosen will have to prove the quality of both inner and outer closure welds for the chosen configuration for each waste package closure joint, both for the LAD prototype welds and for each and every closure weld made during production.

The types and sizes of flaws that might be encountered in the remotely welded joints must be well understood. Ongoing evaluations of weld test samples produced by the recommended weld methods will provide the data base necessary to characterize the weld defects and for subsequent NDE tests. Weld inspection methods must be selected which are capable of detecting the types of defects or flaws potentially produced by the weld method.

The condition of the completed weld (contour, surface finish) must be compatible with the inspection techniques. Post weld cleaning and metal removal may be necessary to provide a surface free of undercutting, splatter, ripple, etc.

Joint geometry will be a major concern in the development of the closure weld NDE. The ideal case would be one in which there are no reflective surfaces on or near the inner portion of the weld which might interfere with interpretation of the test results. Likewise, it is desirable that the exterior surface in the vicinity of the weld be a simple shape and that there is a clear straight line access to the weld in two orthogonal directions.

3.3.1.1 NDE Methods

Tentative selection of NDE methods suitable for remote operation, in a radioactive environment, has yet to be accomplished. Conventional radiographic examination is impossible, and dye penetrants only address surface defects, which reduces conventional inspection possibilities to ultrasonic and eddy current techniques. Ultimately, the limitations of the feasible NDE inspection techniques could force reconfiguration of designs for either or both closure joints (i.e., inner and/or outer closures to be other than the presently envisioned flat plate lid configuration). Furthermore, if the closure welds result in coarse grain structure, then special NDE techniques may have to be developed.

The ultrasonic and eddy current inspection techniques are used for volumetric inspection, whereas dye penetrant inspection is only useful to detect imperfections manifested at the surface. Dye penetrant may be useful as an aid in the inspection; however, the volumetric techniques are by definition the only techniques capable of complete examination of the weld zone. For the multi-barrier waste package design concept, the outer barrier may be 10 cm or greater thickness. The present multi-barrier concept is an inner container fully enclosed within a thick-walled container, each of different material, and requiring a separate weld for installation of the closure lid. A nominal difference in diameters allows for a small gap between the two barriers (presently envisioned as about 0.6 cm radial gap), primarily intended to provide clearance for insertion of one container within the other. Possibly this gap, if uniform around the circumference, would allow sufficient space for inspection of the inner closure weld.

3.4 REMOTE IN-SERVICE-INSPECTION

3.4.1 Objective

The performance of the waste package, as specified by 10 CFR 60, requires a performance verification period. The objective of this development task is to select and develop remote in-service-inspection (ISI) equipment and techniques that are technically and economically acceptable, and which can withstand the radiation dose and temperatures of the waste package environment. The needed equipment will consist of sensors, transmitters, and cabling to be installed in a selected area within the repository for the purpose of monitoring conditions therein. The sensors may be mounted on or around waste packages and/or sample material coupons, mounted on and within the drift rock walls both near and far from emplaced waste packages, and would also be located within any environmental monitoring stations as might be placed in the drifts. Parameters which may be expected to be of interest in order to monitor conditions within the repository will include: temperature, pressure, humidity, pH level, air velocity, strain gages, radioactivity level, and seismic accelerometers.

3.5 WASTE PACKAGE INTERNAL FILLER MATERIAL

3.5.1 Objective

The use of waste package internal filler material versus filling the void space with an inert gas is an issue to be resolved. The choice will be determined by the benefits or penalties related to use of filler materials, as derived from future engineering studies and performance analysis assessments. Filler materials may be solids placed while in a liquid state such as low melting temperature metals, graded coarse granular solids such as iron shot, or fine materials such as dry cementitious mixes (e.g., sand and cement). Cementitious materials would be placed in the dry unreacted state. The material would remain unreacted until such time as the barriers might breach and water would enter the waste package interior, causing the material to react with the water and to solidify.

The purpose of this development task is to perform engineering development activities as may be defined by, and in support of, future engineering trade studies in regard to use of filler material within the waste package. The engineering study must first compare use of filler materials versus an inert gas in the void spaces within the waste package, followed by the comparison of various candidate filler materials. Specific activities will include the following areas: material placement including infiltration and uniformity of distribution in the presence of the internal basket and SNF assemblies, effective thermal conductivity measurements, and additional material properties at elevated temperatures as may be required.

This development task will support both the waste package and MPC engineering development activities. Filler material, if used, would be added remotely to an SNF container/canister following placement of the SNF assemblies into the basket, prior to closure of the container/canister. A manner of measuring the quantity of filler material would be required to establish that placement of the proper total quantity was accomplished, to confirm absence of voids within the space. In the case of the MPC, addition of filler material would take place at the MGDS.

Use of waste package filler materials would assist in achieving several technical objectives. Among these are:

1) Minimization of waste package internal void space so as to minimize the amount of water that could enter the waste package in the event of repository flooding and a breach of the waste package containment barriers

2) Aid in transferring heat from the fuel rods

3) Criticality control

4) Chemical buffering for radionuclides

The use of fillers would increase waste package or MPC weight and cost.

3.5.2 Background

Selection of candidate filler materials must recognize the effect that the presence of such material can have upon the SNF fuel rod temperatures, as compared to having the space filled with an inert gas. This concern would include the brief interval of filler material placement, as well as the extended waste disposal containment period. Filler materials which would be placed in a molten state should have melting temperatures somewhat above the disposal period cladding temperature limit so that the filler would remain in the solid state while in the repository. A brief excursion above this cladding temperature limit for filler material placement would be of no consequence, as the temperature would be far below cladding normal operating temperatures in the reactor.

Desirable attributes of candidate filler materials would include: inertness in the possible waste package internal environments including possible water intrusion, higher thermal conductivity, ease of emplacement including assurance of attaining complete void fill, melting temperature within an acceptable range if the material is to be placed in the molten state, short interval needed for emplacement and confirmation of fill, lower density, naturally plentiful, and inexpensive for the required material purity.

Sample materials which might be considered as candidate waste package filler materials include:

Material	M.P., C	Sp. Gr.	k, W/mC	Comments
Tin	232.0	7.31	64	Not plentiful, no US source
Lead	327.5	11.35	34.6	Considered toxic, very heavy
Zinc	419.6	7.13	115	(Use lower temperature Zn-4Al alloy)
Zn-4Al	381-387	6.6	113	AG40B die cast alloy, inexpensive
Magnetite, Fe_3O_4 natural ore		2.67	0.284	Used at Nevada Test Site, "flows like water"
Iron shot, graded		~6.4	~1-4	k-solid=80.3 (magnetite ratio=~18)

This group of candidate materials presents some interesting characteristics. The thermal conductivity of natural magnetite would categorize it as a thermal insulator. Iron shot is about an order of magnitude higher thermal conductivity, but still poor. Tin is not sufficiently plentiful, and lead is both toxic and very heavy. Of those candidates listed above, the comparison would come down to the zinc alloy and iron shot. Weights would be about the same, but the zinc alloy conductivity is between one and two orders of magnitude higher. Zinc is a plentiful, low cost material. The zinc alloy melting temperature of less than 400 C would not be considered harmful to the fuel rod cladding. Other Zn-AL alloys or zinc alone could be chosen if a somewhat higher melting temperature were desired.

4. WASTE PACKAGE ENGINEERING DEVELOPMENT PROGRAM

The need for long term containment of nuclear waste, which is to be stored within a geologic repository, has been well established by federal regulation in the interest of protecting public health. The current approach to containment is a multi-barrier waste package design concept, providing defense in depth, an approach normally acceptable to the NRC. Manufacturing of the waste package includes the fabrication and assembly of the container bottom shells plus fabrication of closure lids (performed by outside suppliers), fabrication and installation of the internal structure, and the remote closure welding and remote weld inspection of each lid (performed at the repository site following placement of the nuclear waste within the container). Proof of the integrity of the product design will be achieved by careful adherence to the specifications for design, material procurement, fabrication, and processing which have been approved for this application, and by a comprehensive program of component and assembly testing from subscale to full scale prototype proof testing, performed before beginning of production. The waste package development program is to be followed by a 50 year or more program of in-service-inspection (ISI) performance surveillance and verification, as required by federal regulation.

Justification for the waste package development program is that the engineered waste package design and application are sufficiently unique and demanding that the design and manufacturing processes must, to the extent possible, be proven to be capable of meeting the stringent requirements set forth by federal regulations. Furthermore, the required 10,000 year period of performance is unprecedented for any previously engineered structure. The consequences of an inadequate waste package design would be denial of a license; the consequences of an undetected deficiency would be premature breaching of the barriers designed to confine the nuclear waste material, in violation of federal regulations, and thereby causing a potential public health hazard.

Material degradation modes for the basic materials are believed to be understood, as well as the various available means of degradation avoidance or mitigation. The acceleration or triggering of any of these degradation modes (generally, various types of corrosion) could lead to premature breaching of one or both waste package barriers. The chosen manufacturing processes must be proven to produce a final product which does not include these material degradation modes. The quality of every unit produced must also be proven by NDE inspection. Selected units will also be subjected to ISI until conclusion of the required performance surveillance and verification program.

Technical Requirements Documents will be prepared for each of the development tasks. These documents will delineate each issue which must be addressed and the analysis and/or experimental effort designed to address each issue. Organizations which wish to perform this development work for the program will be required to submit their Test Plans for accomplishing the work for approval. The results obtained from these efforts in the form of data, reports, deliverables, milestones, and decisions will together provide the closure to these issues associated with the waste package.

4.1 MANUFACTURING DEVELOPMENT: FABRICATION, CLOSURE, AND NDE

The waste package manufacturing development program will address waste package manufacturability through both the ACD phase and the LAD phase. The initial ACD task will be to perform an engineering study to assess the various alternatives and to recommend waste package manufacturing processes compatible with each specific waste package design concept. The initial development work will capitalize to the degree possible upon the fabrication and closure studies previously done for the SCP-CD, and the other earlier waste disposal studies for salt and basalt repositories. The manufacturing interrelationships of Task 1: Fabrication, Task 2: Closure, and Task 3: Inspection have been discussed previously in this document. Due to the interrelationships, it is possible that contracts for these three manufacturing development tasks may not be issued individually, but may be partially or wholly combined.

4.1.1 Engineering Study Task

The development testing tasks will initially conduct an engineering study task which will begin by preparing a list of candidate waste package design concepts, expanding the list available from the M&O Waste Package Development group. A list of manufacturing processes will be prepared, and a preliminary list or matrix prepared to associate manufacturing processes believed compatible with the waste package design concepts. The engineering study task will continue with information gathering including: literature surveys as appropriate to the manufacturing processes under consideration, industrial contacts, contacts with international organizations concerned with nuclear waste disposal, and discussions with team members and other experts in the field.

The goal of the engineering study tasks (for container fabrication, closure welding and weld repair, and closure weld NDE inspection) will be to select several manufacturing processes or techniques for testing. An objective methodology must be utilized in the selection process. Budgetary cost estimates for the various waste package concepts will be developed to support the selection methodology (the cost estimates shall also include the implicit cost of waste package closure and inspection which take place at the repository site). Results and recommendations of the engineering study task will be documented. The original Test Plans (TPs) will then be reviewed and amended if required to support the manufacturing testing program.

4.1.2 Development Program

The ACD phase of the waste package manufacturing development program will provide test specimens and subscale mockup fabrications necessary for development testing. The conclusion of the ACD phase testing program will lead to formal evaluation reports and drafts of proposed specifications for the selected manufacturing processes. Separate evaluation reports and proposed specifications will be prepared for Task 1: Fabrication, Task 2: Closure, and Task 3: Inspection.

The LAD phase of the waste package manufacturing development program will complete the concept evaluations and lead to selection of the primary and alternate design concepts and associated compatible manufacturing techniques. During the LAD phase, the continuation of manufacturing development will produce several sets of full scale prototype parts for final development and acceptance testing, and will provide the waste package manufacturing development final reports and final specification packages for each of the three tasks.

The foregoing waste package manufacturing development program applies equally to metallic and metallic/non-metallic containers. TRDs and TPs will be prepared if, as, and when metallic/non-metallic container design concepts are proposed. Development activities for such container concepts would be as described within this section.

4.2 INTERNAL BASKET DEVELOPMENT

The waste package internal basket manufacturing development program will develop fabrication techniques for the several basket design configurations. The basic basket design configuration will be a programmatic decision, whether of the flux trap type or burn-up credit type. Neutronics analyses will define the quantity of neutron absorber material required, usually in the form of an alloy within a base material, such as alloying either stainless steel or aluminum with boron. This alloyed material cannot currently be used as a structural member of the basket structure, although it may be bonded to or sandwiched between the structural materials. The manufacturing development program will determine methods of fabrication/assembly of the basket, including the process control needed to produce a product with satisfactory geometric integrity to meet specified design clearances (sufficiently square and straight cells). The need for, and methods of affixing the basket within the waste package will be developed.

The basket manufacturing development program will provide test specimens and subscale mockup fabrications. The conclusion of the ACD phase testing program will lead to a formal evaluation report and drafts of proposed specifications for the selected basket manufacturing processes. During the LAD program phase, manufacturing development will produce several sets of full scale prototype parts for final development and acceptance testing, and will provide the waste package manufacturing development final report and final specification package.

4.3 REMOTE IN-SERVICE-INSPECTION TASK

This waste package development program task will develop the equipment and techniques necessary for waste package ISI performance demonstration, as specified by 10 CFR 60, which requires a 50 year performance verification period. The purpose of ISI is to perform in-situ monitoring of various physical parameters of selected emplaced waste packages and of the

repository environment The initial development program task will be to perform an engineering study to identify ISI requirements and equipment which would be needed to accomplish those requirements. The testing phase of this development task will test relevant sensors in the anticipated repository environmental conditions (high temperature, radioactive). The expected types of sensors to be investigated include temperature, pressure, humidity, pH measurement, strain gages, radioactivity, and seismic accelerometers. Various types of transmission cables and local transmitters necessary for transmission of the sensor data will also be developed.

The ISI development program will provide test specimens and mockup fabrications. The conclusion of the ACD phase testing program will lead to a formal evaluation report and drafts of proposed specifications for the monitoring equipment and processes. During the LAD program phase, ISI development will produce several sets of prototype parts for final development and acceptance testing, and will provide the ISI development final report and final specification package.

4.4 WASTE PACKAGE INTERNAL FILLER MATERIAL TASK

This waste package development task will develop the means of properly emplacing waste package filler materials, providing that engineering design analysis and performance analysis determine that use of a filler material is deemed to offer a technical benefit. Certain engineering benefits of using filler materials have been established, such as reducing the waste package internal void space thereby limiting the quantity of water which could enter into the waste package.

The initial development program task will be to select a number of candidate filler materials, particularly addressing thermal consequences. The testing phase of this development task will be development of techniques for remote placement of the material, and confirmation of complete and proper placement. A secondary task of development will be measurement of any material physical properties as may be required. Material types to be investigated will include graded granular materials, cementitious materials, and low-temperature melting materials, primarily metals. The long term physical/chemical stability potential of the selected cementitious materials will also be investigated. Materials compatibility testing may also be required.

The filler material development program will provide test specimens consisting of subscale and full scale mockup fabrications. The conclusion of the ACD phase testing program will lead to a formal evaluation report and drafts of proposed specifications for filler material composition, material conditioning, and material handling for filler material remote placement processes. During the LAD program phase, manufacturing development will produce several sets of full scale prototype parts for final development and acceptance testing, and will provide the waste package filler material development final report and final specification package.

5. DEVELOPMENT PROGRAM MILESTONES AND SCHEDULE

Milestones and schedules as addressed by the individual tasks are presented below, with fiscal year starting dates indicated as /yy or mm/yy (fiscal year begins October 1). The tasks are presented in bar chart form on Figure 7 on a fiscal year basis.

5.1 CONTAINER FABRICATION, INCLUDING STRESS MINIMIZATION

5.1.1 Inner Barrier and Outer Barrier

/95 Engineering study: list design concepts and compatible fabrication processes for both inner barrier and outer barrier; prepare budgetary cost estimates

/95 Objective ranking and recommendation of selected design concepts and of fabrication processes for both inner barrier and outer barrier containers

/95 Adoption of recommended fabrication test program for ACD phase and beginning of LAD phase (to LAD design selection); begin inner barrier and outer barrier container fabrication test program

/97 Issue ACD report on recommended inner barrier and outer barrier design concepts and fabrication processes

/97 Select LAD primary and alternate waste package design configurations

/97 Adoption of fabrication test program for remainder of LAD phase

/99 Issue LAD report on final inner barrier and outer barrier design concepts and fabrication processes

5.1.2 Internal Basket Development

/95 Engineering study: list basket design concepts and compatible fabrication processes including installation within the waste package; prepare budgetary cost estimates

/95 Objective ranking and recommendation of selected basket design concepts and of fabrication and installation processes

/95 Adoption of recommended fabrication test program for ACD phase and beginning of LAD phase (to LAD design selection); begin basket test program

/97 Issue ACD report on recommended basket design configuration and fabrication processes including installation within the waste package

/97 Select LAD primary and alternate waste package design configurations

/97 Adoption of basket test program for remainder of LAD phase

/99 Issue LAD report on final basket design configuration and fabrication process including waste package installation

5.2 REMOTE CLOSURE, INCLUDING WELD-INDUCED STRESS MINIMIZATION

/94 Engineering study: list closure joint design concepts and compatible closure welding processes for both inner barrier and outer barrier; prepare estimates of implicit cost for remote closure welds

/94 Objective ranking and recommendation of selected closure joint design concepts and of welding processes for both inner barrier and outer barrier

/94 Adoption of recommended closure joint test program for ACD phase and beginning of LAD phase (to LAD design selection); begin inner barrier and outer barrier closure joint test program

/96 Issue ACD report on recommended closure joint design configurations and fabrication processes for both inner barrier and outer barrier

/97 Select LAD primary and alternate waste package design configurations

/97 Adoption of closure joint test program for remainder of LAD phase

/99 Issue LAD report on final closure joint design configurations and fabrication processes for both inner barrier and outer barrier

5.3 REMOTE NONDESTRUCTIVE EXAMINATION

This development task is applicable specifically to the waste package container closure welds.

/95 Engineering study: list NDE processes compatible with closure joint configurations; prepare estimates of implicit cost for remote joint inspection

/95 Objective ranking and recommendation of selected NDE processes for both inner barrier and outer barrier closure welds

/95 Adoption of recommended NDE test program for ACD phase and beginning of LAD phase (to LAD design selection); begin inner barrier and outer barrier closure joint NDE test program

/97 Issue ACD report on recommended closure joint NDE processes for both inner barrier and outer barrier

/97 Select LAD primary and alternate waste package design configurations

/97 Adoption of NDE test program for remainder of LAD phase

/99 Issue LAD report on final closure joint NDE processes for both inner barrier and outer barrier

5.4 REMOTE IN-SERVICE-INSPECTION

/97 Engineering study: determine technical requirements to comply with ISI, list needed instrumentation; define environmental conditions and instrumentation lifetime required

/97 Survey available equipment: sensors, transmitters, and transmission cables compatible with environment and lifetime; prepare instrumentation development plan, as required

/97 Adoption of recommended development test program; issue development contracts to instrumentation firms

/98 Begin instrumentation test program

/00 Issue report on final ISI design and equipment

5.5 WASTE PACKAGE INTERNAL FILLER MATERIAL INFILTRATION/UNIFORM DISTRIBUTION

/94 Engineering study: list candidate waste package filler materials, potential benefits, deleterious effects, material placement concerns; prepare budgetary cost estimates

/95 Objective ranking and recommendation of selected filler materials and placement techniques

/95 Adoption of recommended filler material test program for ACD phase; begin filler material test program

/96 Issue ACD report on recommended filler materials and placement techniques

/97 Select LAD primary and alternate waste package design configurations

/97 Adoption of filler material test program for remainder of LAD phase

/99 Issue LAD report on final filler material and placement technique

5.6 DEVELOP AND TEST FULL SCALE PROTOTYPE

Milestones and schedules for this task will be developed at a later time.

6. DEVELOPMENT COSTS

Development test program costs are presented in Table 1, broken down by task and by fiscal year. The task milestones and schedules are presented on Figure 7.

REVISIONS			
LTR	DESCRIPTION	DATE	APPROVED
A	REVISED & REDRAWN	07-28-93	T. DOERING

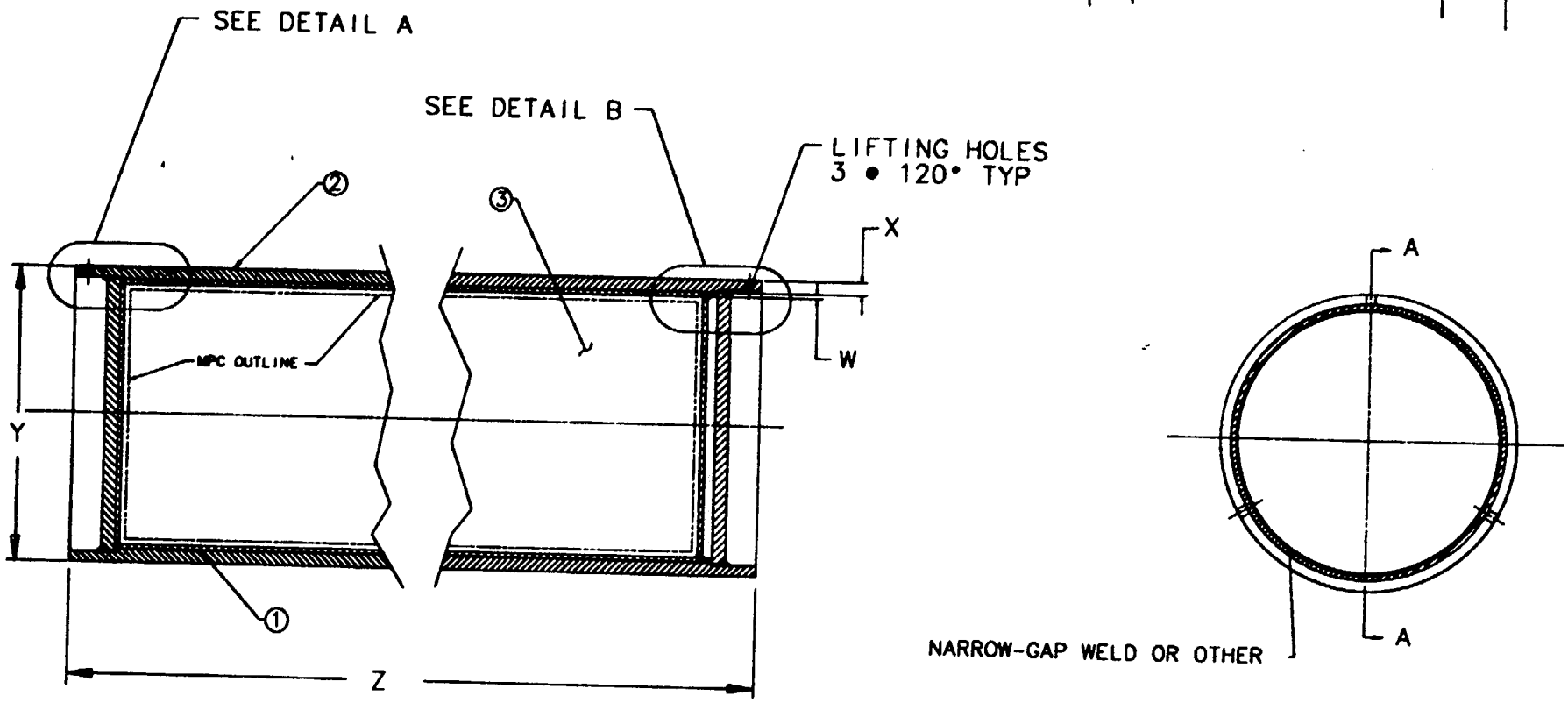

SECTION A-A

NOTES:

1. WELD FILLER MATERIAL IS TO BE OVER-ALLOYED TO CONFORM WITH PARENT MATERIAL 100%.
2. ASSEMBLY IS TO BE FULLY ANNEALED AFTER WELDING.
3. DETAIL "A" WELDS BY FABRICATOR, DETAIL "B" WELDS BY PURCHASER, LIDS SUPPLIED BY FABRICATOR.
4. CONTAINER SIZED TO PROVIDE 0.6 CM CLEARANCE ALL AROUND.
5. 21 PWR / 40 BWR CASE TAKES CREDIT FOR FUEL BURNUP. 16 PWR / 32 BWR CASE DOES NOT TAKE CREDIT FOR FUEL BURNUP.
6. 0.6 CM RADIAL CLEARANCE BETWEEN BARRIER 1 AND 2.

BARRIER 1 W DIM.	BARRIER 2 X DIM.	Y DIM.	Z DIM.
0.95 cm	10 cm	177.5 cm	562.2 cm
0.95 cm	20 cm	197.5 cm	562.2 cm
0.95 cm	40 cm	247.5 cm	632.2 cm

NO.	NAME	REQD	MATL
3	MPC	1	STAINLESS STEEL
2	BARRIER 2	1	CARBON STEEL
1	BARRIER 1	1	ALLOY 825

OCRWM M&O / B&W FUEL CO.

MULTI-BARRIER MPC
REPOSITORY DISPOSAL CONTAINER
21 PWR / 40 BWR & 16 PWR / 32 BWR

DRAWN: G. CONNELL
ENGINEER: W. WALLIN
CHECKED W. WALLIN
APPROVED: T. DOERING

SK-100-011

DATE: 7-1-93 | SCALE: NONE | SH 1 OF 2

Figure 1. Multi-Barrier MPC Repository Disposal Container (sheet 1 of 2)

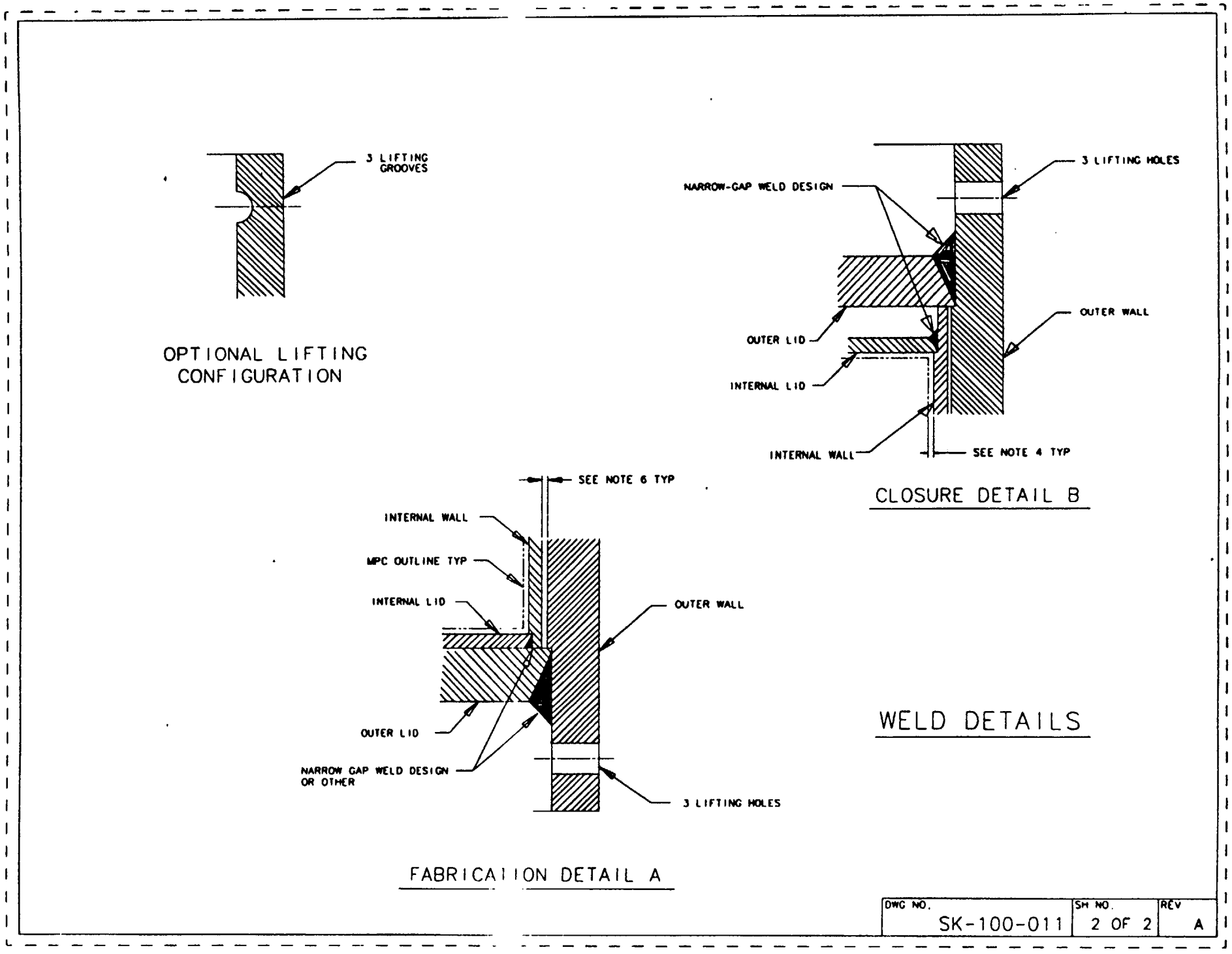

Figure 2. Multi-Barrier MPC Repository Disposal Container (sheet 2 of 2) Weld Details

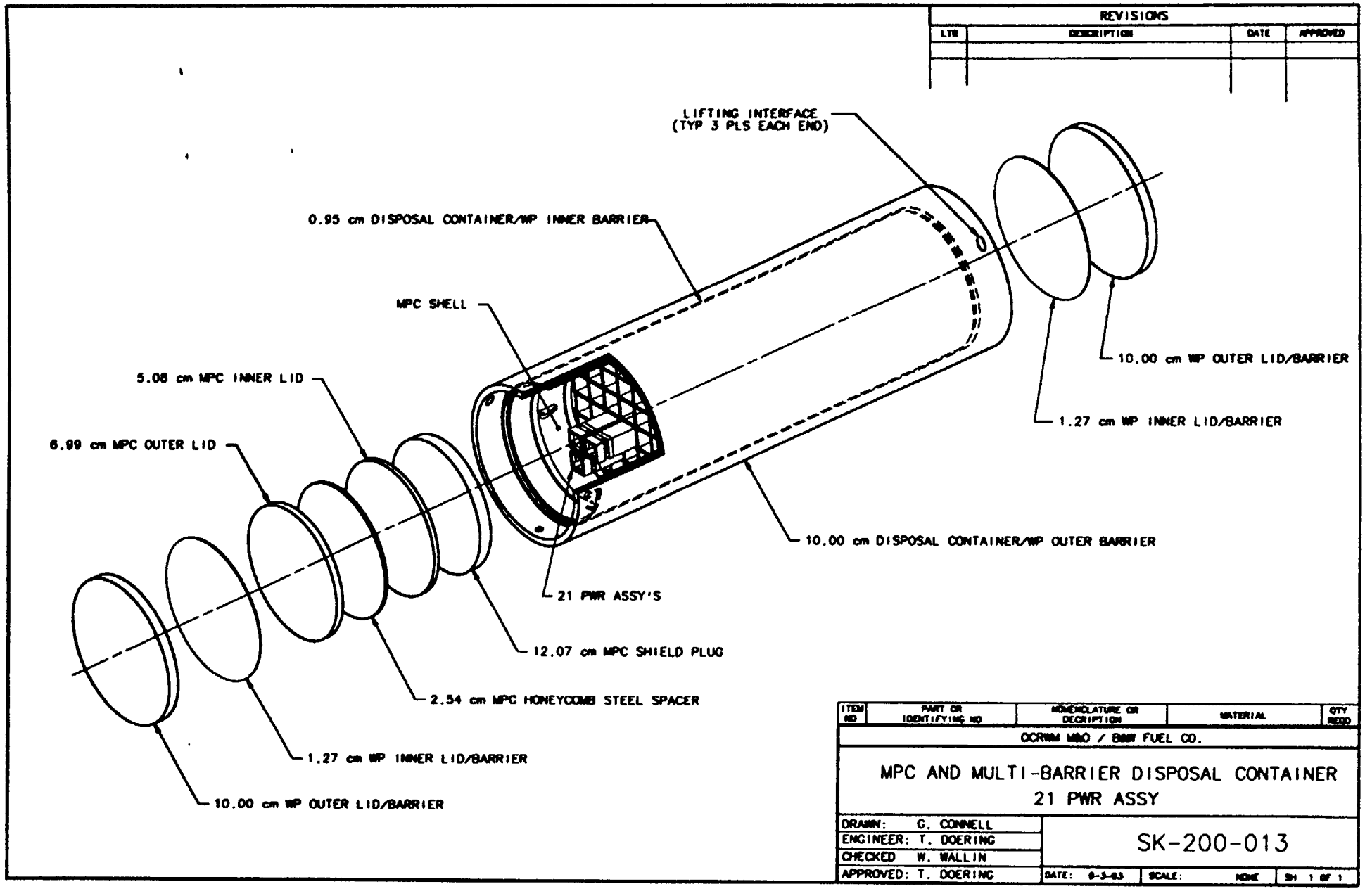

Figure 3. MPC and Multi-Barrier Disposal Container

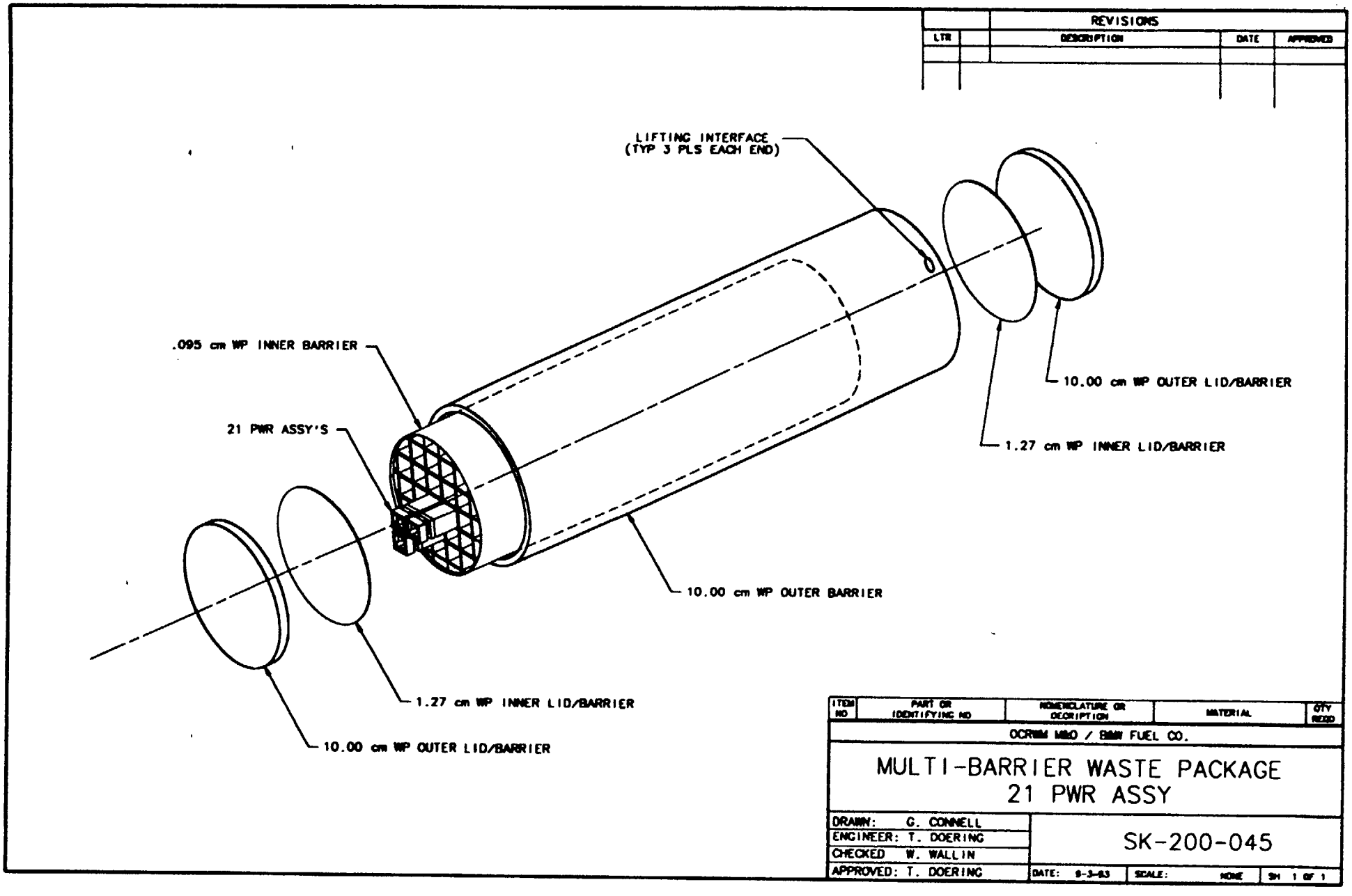

Figure 4. Multi-Barrier Waste Package

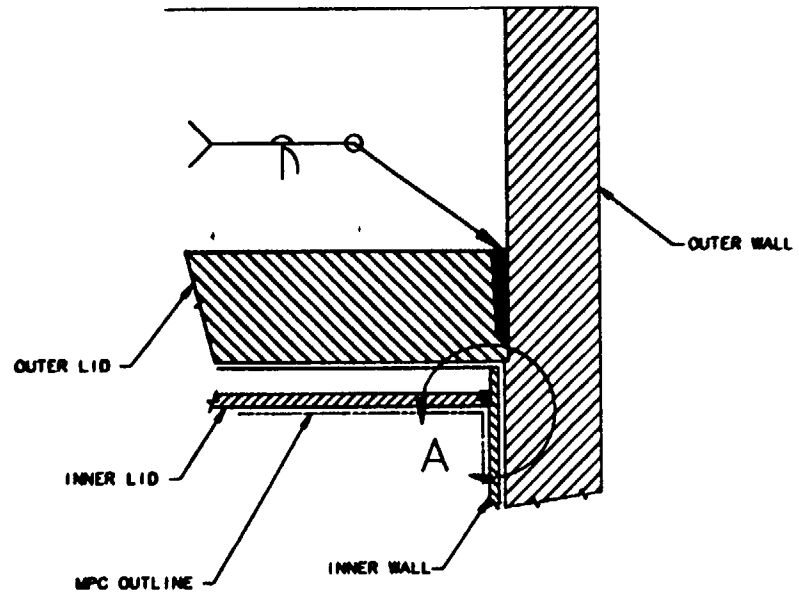

10 cm OUTER BARRIER

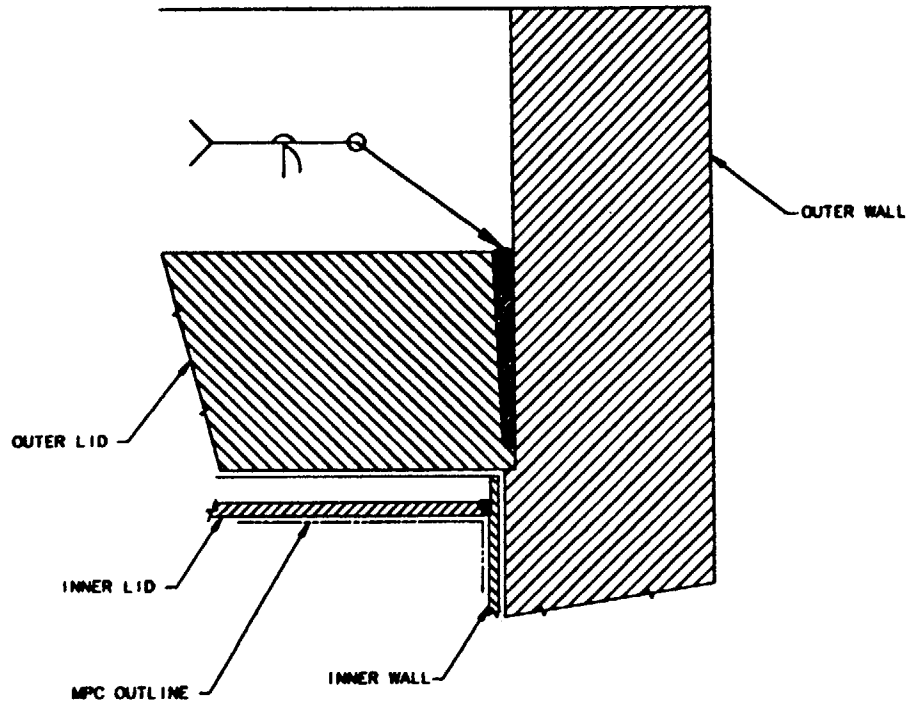

20 cm OUTER BARRIER

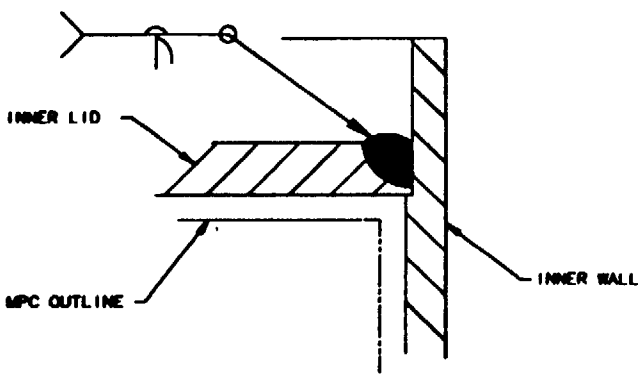

DETAIL A

2 PLACES
SCALE: 4/1

MULTI-BARRIER
WASTE PACKAGE/MPC CONTAINER
CLOSURE WELD DETAILS

SK-100-014

08/30/93 SH 1 OF 2

Figure 5. Multi-Barrier Waste Package/MPC Container Closure Weld Details (sheet 1 of 2)

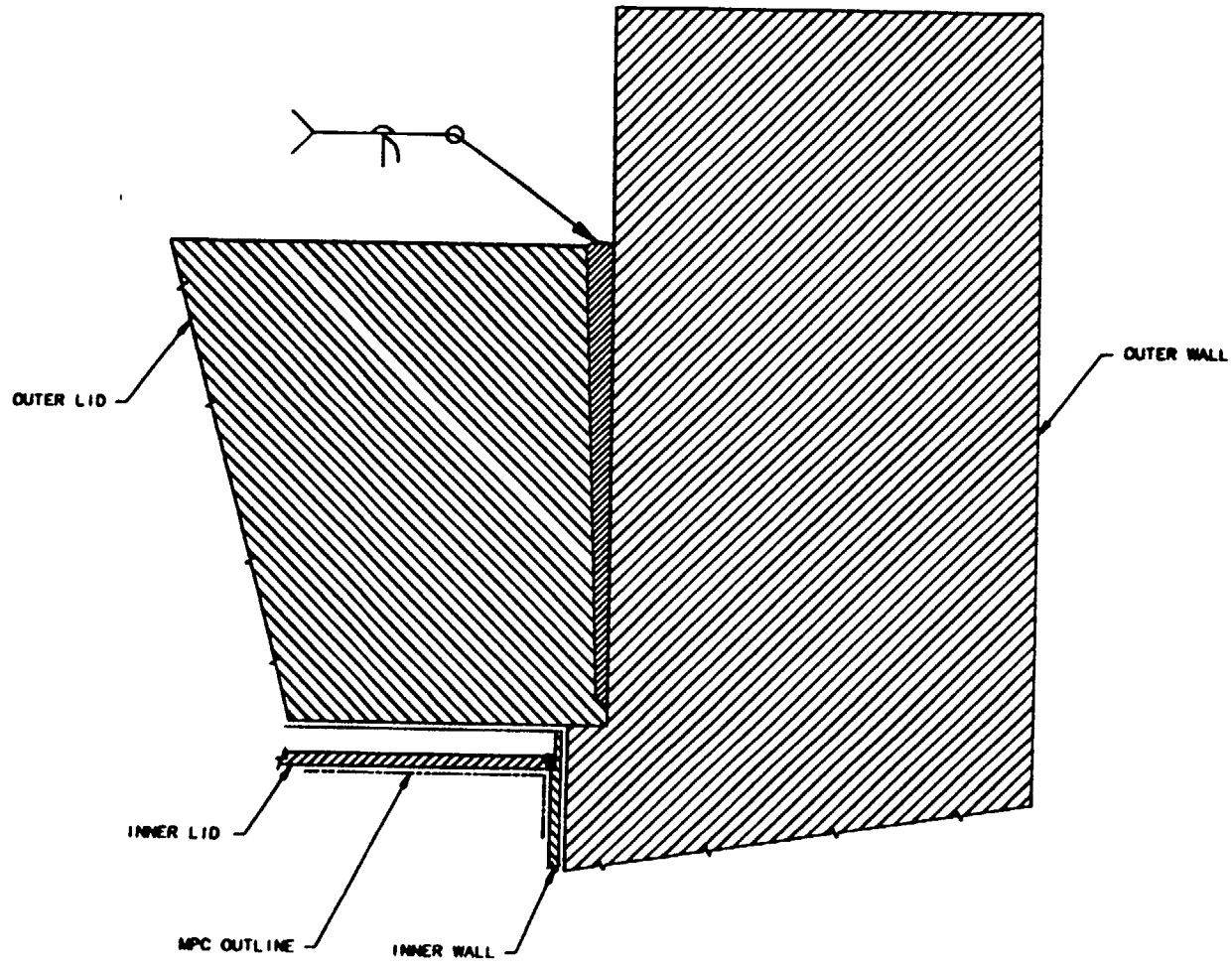

45 cm OUTER BARRIER

MULTI-BARRIER
WASTE PACKAGE/MPC CONTAINER
CLOSURE WELD DETAILS
SK-100-014

08/30/93 SH 2 OF 2

Figure 6. Multi-Barrier Waste Package/MPC Container Closure Weld Details (sheet 2 of 2)

Waste Package Engineering Development Task Schedule

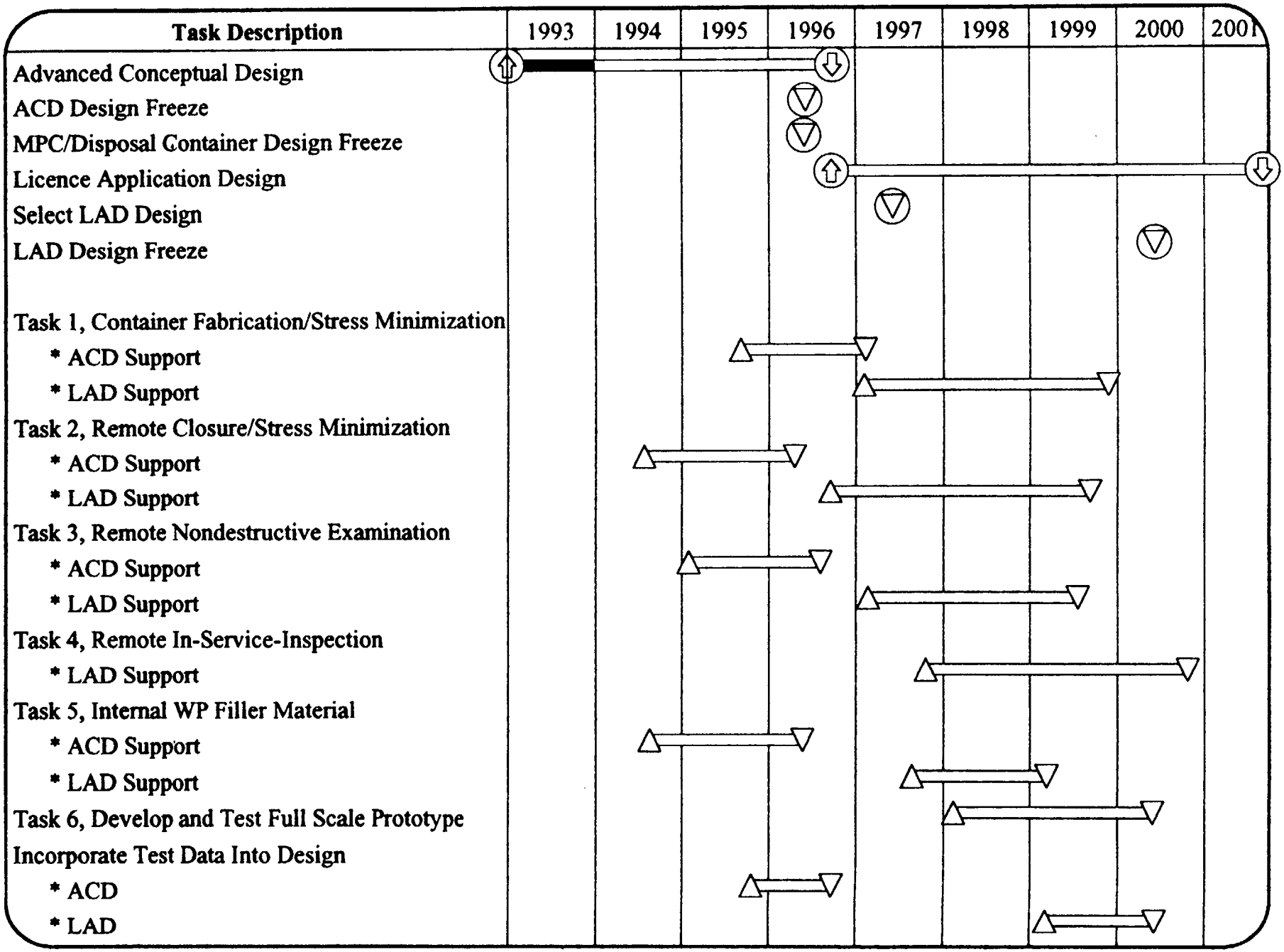

Figure 7. Waste Package Engineering Development Task Schedule

Engineering Development Tasks Annual, Task, and Total Budget Estimate

Government Fical Year	1993	1994	1995	1996	1997	1998	1999	2000	2001	Task Total
Task Description			*Cost In $ 1000.00*							
Advance Conceptual Design	Start			End						
ACD Freeze				End						
MPC/Disposal Container Design Input				End						
Licence Application				Start						
Select LAD Design					End				End	
LAD Design Freeze								End		
Task 1, Container Fabrication/Stress Minimization			25	275	275	275	275			1125
Task 2, Remote Closure/Stress Minimization		75	250	150	250	250	225			1200
Task 3, Remote Nondestructive Examination			175	100	150	225	175			825
Task 4, Remote In-Service-Inspection					50	250	250	200		750
Task 5, Internal WP Filler Material		25	125	50	50	150	50			450
Task 6, Develop and Test Full Scale Prototype						500	850	300		1650
Yearly Total	0	100	575	575	775	1650	1825	500	0	6000

Table 1. Engineering Development Tasks Annual, Task, and Total Budget Estimate