APPENDIX D
SURFACE DESIGN

BOUND SEPARATELY

99ϕ224ϕ285 - Part 6

SURFACE DESIGN FIGURES

Appendix D contains figures and drawings describing the repository surface design. The figures support the descriptions provided in Section 7 of this volume. For ease of understanding the data, all of the figures that appear in Section 7 are duplicated in this appendix along with design diagrams such as general arrangements (i.e., floor plans, sections, and elevations), flow diagrams, heating, ventilation, and air conditioning zone diagrams, and mechanical equipment details.

The listing that begins below is organized according to the section the figures support. The figures and drawings are listed by number, title, and page number, except for the figures associated with Section 7.2.7. The listing for these figures is categorized by site map reference and includes additional information.

Section 7.1 Overview

7.1.1-1 Repository Surface Site Overview D-1

Section 7.2 North Portal Area Overview

7.2.1-1. Conceptual Illustration of the North Portal Operations Area D-3
7.2.1-2. North Portal Operations - Surface Overview D-5
7.2.1-3. North Portal Operations - Area Site Map D-6
7.2.1-4. North Portal Operations - RCA Operations Flow D-7

Section 7.2.2 Waste Handling Building

General WHB Figures

7.2.2-1 Waste Form Types: SCP-CD and ACD D-8
7.2.2-2 Waste Form Transfers: SCP-CD and ACD D-9
7.2.2-3 Mode of Transportation:SCP-CD and ACD D-9
7.2.2-4 Number of Shipments:SCP-CD and ACD D-9
7.2.2-5 Cask-Cell DC-Cell Interface Method D-10
7.2.2-6 Waste Handling Building (Floor Plan and Building Section) D-11

System Flow Figures

7.2.2-7 Waste Handling Systems Overview D-12
7.2.2-8 Cask Receipt and Waste Canister Unloading D-13

7.2.2-9	Cask Receiving & Preparation System	D-15
7.2.2-10	Canistered Waste Transfer System	D-16
7.2.2-11	DC Welding and Staging	D-17
7.2.2-12	DC Welding & Transfer Systems	D-19
7.2.2-13	SFA Unloading, Canister Filling and Performance Confirmation	D-21
7.2.2-14	Uncanistered Waste Transfer System (pg 1 of 2)	D-23
7.2.2-15	Uncanistered Waste Transfer System (pg 2 of 2)	D-24
7.2.2-16	Canister Filler Addition System	D-25
7.2.2-17	Cask Preparation and Shipping	D-27
7.2.2-18	Cask Preparation & Shipping System	D-29
7.2.2-19	Performance Confirmation System	D-30

Mechanical Flow Diagrams

WHB-SK-101B	CB/Loaded Cask Prep Area Sheet 1	D-31
WHB-SK-101C	Canistered Waste Handling Sheet 2	D-32
WHB-SK-101D	Subsurface Transfer Sheet 3	D-33
WHB-SK-101E	Bare SFA Handling Sheet 4	D-34
WHB-SK-101F	Unloaded Cask Prep Area/CB Sheet 5	D-35

General Arrangements

WHA-SK-100A	Floor Plan at El. 100+0	D-36
WHA-SK-100B	Floor Plan at El. 116+0	D-37
WHA-SK-100C	Floor Plan at El. 130+0	D-38
WHA-SK-100D	Floor Plan at El. 143+0	D-39
WHA-SK-100E	Floor Plan at El. 160+0	D-40
WHA-SK-100F	Roof Plan at El. 182+0	D-41
WHA-SK-100G	Building Sections	D-42
WHA-SK-100H	Building Sections	D-43
WHA-SK-100I	Elevations	D-44

HVAC Flow Diagrams

WHH-SK-100	Composite Key	D-45
WHH-SK-101	Carrier Bay/HVAC Equipment Room	D-46
WHH-SK-102A	Primary Confinement Supply Air	D-47
WHH-SK-102B	Secondary & Tertiary Confinement Supply Air	D-48
WHH-SK-102C	Primary Confinement Areas	D-49
WHH-SK-102D	Secondary & Tertiary Area (El. 100+0)	D-50
WHH-SK-102E	Secondary & Tertiary Area (El. 116+0)	D-51
WHH-SK-102F	Secondary & Tertiary Area (El. 130+0)	D-52
WHH-SK-102G	Secondary & Tertiary Area (El. 143+0)	D-53
WHH-SK-102H	HVAC Equipment Room	D-54
WHH-SK-102I	Primary Confinement Exhaust Air	D-55

WHH-SK-102J	Secondary & Tertiary Exhaust Air	D-56
WHH-SK-102K	HVAC Exhaust Stack	D-57
WHH-SK-102L	Neutral Areas	D-58

HVAC Confinement Zone Plans

WHH-SK-103A	Plan at El. 100+0	D-59
WHH-SK-103B	Plan at El. 116+0	D-61
WHH-SK-103C	Plan at El. 130+0	D-63
WHH-SK-103D	Plan at El. 143+0	D-65
WHH-SK-103E	Plan at El. 160+0	D-67

Mechanical Handling Equipment Details

WHM-SK-101A	Loaded Cask Preparation Area Cart	D-69
WHM-SK-101B	Preparation Area Station Envelope	D-70
WHM-SK-101C	Cask Lid Bolter	D-71
WHM-SK-101D	Cask Lid Remover	D-72
WHM-SK-101E	SFA Canister ACGLF Universal	D-73
WHM-SK-101F	Disposal Container ACGLF Universal	D-74
WHM-SK-101G	Horizonlalizer	D-75
WHM-SK-101H	Disposal Container Transfer Gantry	D-76
WHM-SK-101I	Fuel Transfer Crane	D-77
WHM-SK-101J	Bare SFA Disposal Container Cart	D-78
WHM-SK-101K	Port Plug Bare SFA Cask Port Room	D-79
WHM-SK-101L	PWR Bare SFA Staging	D-80
WHM-SK-101M	BWR Bare SFA Staging	D-81

Section 7.2.3 Cask Maintenance Facility

General CMF Figures

7.2.3-1	Cask Maintenance Facility (Floor Plan and Building Section)	D-82

System Flow Figures

7.2.3-2	Cask Maintenance System Overview	D-83
7.2.3-3	Cask Preparation System	D-84
7.2.3-4	Cask Reconfiguration & Recertification System	D-85
7.2.3-5	Decontamination System	D-86
7.2.3-6	Cask Component Repair and Closure System	D-87
7.2.3-7	Cask External Repair System	D-88
7.2.3-8	Pool Purification System	D-89

General Arrangements

CMA-SK-001	Floor Plan at El. 100+0	D-90
CMA-SK-002	Basement Plan at El. 80+0	D-91
CMA-SK-003	Floor Plan at El. 126+0	D-92
CMA-SK-004	Roof Plan at El. 152+0	D-93
CMA-SK-005	Building Sections	D-94
CMA-SK-006	Elevations	D-95

HVAC Flow Diagrams

CMH-SK-101	Truck / Railcar Cleaning Area	D-96
CMH-SK-102A	Offices and Change Rooms	D-97
CMH-SK-102B	HVAC Equipment Room 1	D-98
CMH-SK-103A	Cask Maintenance Area	D-99
CMH-SK-103B	Cask Maintenance Area	D-100
CMH-SK-103C	Cask Maintenance Area	D-101
CMH-SK-103D	Cask Maintenance Area	D-102
CMH-SK-103E	Cask Maintenance Area	D-103

HVAC Confinement Zone Plans

CMH-SK-104A	Plan at El. 100+0	D-105
CMH-SK-104B	Basement Plan at El. 80+0	D-107
CMH-SK-104C	Plan at El. 126+0	D-109

Section 7.2.4 Waste Treatment Building

Central Shops

7.2.4-1	Waste Treatment Operations	D-111
7.2.4-2	Waste Treatment Building (Floor Plan and Building Section)	D-113

System Flow Figures

7.2.4-3	Waste Treatment System Overview	D-114
7.2.4-4	Liquid LLW Processing (Aqueous)	D-115
7.2.4-5	Liquid LLW Processing (Chemical)	D-116
7.2.4-6	Solid LLW Treatment System	D-117
7.2.4-7	Mixed Waste Transfer System	D-118
7.2.4-8	Hazardous Waste Transfer System	D-119

Process Flow Diagrams

WTP-SK-001	Liquid LLW Processing	D-120
WTP-SK-002	Liquid LLW Processing	D-121
WTP-SK-003	Liquid LLW Processing	D-122
WTP-SK-004	Liquid LLW Processing	D-123
WTP-SK-005	Liquid LLW Processing	D-124
WTP-SK-006	Liquid LLW Processing	D-125
WTP-SK-007	Liquid LLW Processing	D-126
WTP-SK-008	Liquid LLW Processing	D-127
WTP-SK-009	Liquid LLW Processing	D-128
WTP-SK-010	Liquid LLW Processing	D-129
WTP-SK-011	Liquid LLW Processing	D-130
WTP-SK-012	Solid LLW Processing	D-131
WTP-SK-013	Solid LLW Processing	D-132
WTP-SK-014	Solid LLW Processing	D-133
WTP-SK-015	Solid LLW Processing	D-134
WTP-SK-016	Solid LLW Processing	D-135
WTP-SK-017	Solid LLW Processing	D-136
WTP-SK-018	Solid LLW Processing	D-137
WTP-SK-019	Solid LLW Processing	D-138
WTP-SK-020	Liquid and Solid LLW Processing Material Balance	D-139
WTP-SK-050	Hazardous Waste Handling	D-140
WTP-SK-051	Hazardous Waste Handling	D-141
WTP-SK-052	Liquid and Solid Hazardous Waste Material Balance	D-142
WTP-SK-060	Mixed Waste Handling and Storage	D-143
WTP-SK-061	Mixed Waste Material Balance	D-144

General Arrangements

WTA-SK-001	Floor Plan at El 100+0	D-145
WTA-SK-002	Floor Plan at El 115+0	D-146
WTA-SK-003	Roof Plan	D-147
WTA-SK-004	Building Sections	D-148
WTP-SK-005	Elevations	D-149
WTP-SK-006	Elevations	D-150

HVAC Flow Diagrams

WTH-SK-101	Shipping and Receiving Area	D-151
WTH-SK-102	Offices and Change Rooms	D-152
WTH-SK-103A	Process Areas Ventilation	D-153
WTH-SK-103B	Process Areas Ventilation	D-154
WTH-SK-103C	HVAC Equipment Room	D-155
WTH-SK-103D	Process Areas Exhaust Air	D-156

WTH-SK-103E HVAC Exhaust Stack D-157

HVAC Confinement Zone Plans

WTH-SK-104A Plan at El 100+0 ..... D-159
WTH-SK-104B Plan at El 115+0 ..... D-161

Section 7.2.5 Carrier Staging Shed

General CSS Figures

7.2.5-1 Carrier Staging Shed (Floor Plan and Building Section) D-163
7.2.5-2 Carrier Staging Shed D-164

System Flow Figure

7.2.5-3 Carrier Staging System D-165

Mechanical Flow Diagrams

CSS-SK-101A Carrier Staging Shed D-166

General Arrangements

CSA-SK-100 Plan, Elevation and Section D-167

Section 7.2.6 Transporter Maintenance Building

General TMB Figures

7.2.6-1 Transporter Maintenance Building (Floor Plan and Building Section) D-168

General Arrangements

TMA-SK-001 Floor Plan at El 100 and Mezzanine D-169
TMA-SK-002 Elevations D-170
TMA-SK-003 Building Section D-171

Section 7.2.7 North Portal Support Structures

Site Map Ref.	*Title*	*Drawing Number*	*Source*	
5010	Switchgear Building Floor Plan Site	YMP-025-1-7007-AR101	ESF	D-172
5008	Change House First Floor and Second Floor Plans	BABBAF000-01717-2100-22150-00	ESF	D-173
N214	DC Receiving Shed	DCA-SK-100	ACD	D-174
220-3A	Security Station 1 (Main BOP portal) Floor Plan	SK-228-A-200	SCP-CDR ..	D-175
220-3A	Security Station 1 (Main BOP portal) Section	SK-228-A-220	SCP-CDR ..	D-176
220-3B	Security Station 2 (RCA/BOP portal) Floor Plan and Section	SK-228-A-221	SCP-CDR ..	D-177
220-3B	Security Station 2 (RCA/BOP portal) Elevations	SK-228-A-222	SCP-CDR ..	D-178
220-3C	Security Station 3 (RCA truck/rail portal) Floor Plan, Section & Elevations	SK-221-A-230	SCP-CDR ..	D-179
220-3C	Health Physics Sta. No. 4 Floor Plan, Section & Elevations	SK-221-A-240	SCP-CDR ..	D-180
220-5A	Administration Building Ground Floor Plan	SK-225-A-100	SCP-CDR ..	D-181
220-5A	Administration Building Second Floor Plan	SK-225-A-110	SCP-CDR ..	D-182
220-5A	Administration Building Cross Section Study	SK-225-A-133	SCP-CDR ..	D-183
220-5A	Administration Building Cross Section and Roof Plan	SK-225-A-135	SCP-CDR ..	D-184
220-5A	Administration Building Elevations 1 of 2	SK-225-A-140	SCP-CDR ..	D-185
220-5A	Administration Building Elevations 2 of 2	SK-225-A-141	SCP-CDR ..	D-186
220-5B	Food Service Facility Floor Plans	SK-228-A-140	SCP-CDR ..	D-187

Site Map Ref.	*Title*	*Drawing Number*	*Source*	
220-5B	Food Service Facility Section	SK-228-A-160	SCP-CDR . .	D-188
220-5C	Training Center	Included under 220-5A, Administration Building		
220-1B	Medical Center	None Available		
220-2	Fire Station Floor Plan	SK-228-A-300	SCP-CDR . .	D-189
220-2	Fire Station Section	SK-228-A-320	SCP-CDR . .	D-190
220-22	Computer Center Plan, Elevations, Section	SK-225-A-201	SCP-CDR . .	D-191
220-7	Central Warehouse	None Available		
220-4A	Central Shops Floor Plan	SK-226-A-100	SCP-CDR . .	D-192
220-4A	Central Shops Section	SK-226-A-120	SCP-CDR . .	D-193
220-4B	Motor Pool and Facility Service Station	None Available		
220-6	Mockup Building Floor Plan and Sections	SK-225-A-400	SCP-CDR . .	D-194
N221-2	Utility Building	None Available		
N221-3	Visitors Center Plans, Section and Elev.	4.2.2.21-G1	MRS/MPC .	D-195

Section 7.2.8 North Portal Site Support Systems

7.2.8-1 North Portal Water Systems D-196
7.2.8-2 North Portal Communications Monitoring and Control System . D-197

Section 7.3 South Portal Development Operations

7.3-1 South Portal Development Operations - Site Plan D-198
7.3-2 South Portal Development Operations Muck Storage and Transfer D-199

Section 7.4 Emplacement Shaft Surface Operations

7.4-1 Emplacement Side Exhaust Shaft Fans and HEPA Filters D-200

Section 7.5 Development Shaft Surface Operations

7.5-1 Development Shaft Surface Operations - Site Plan D-201
7.5-2 Development Exhaust Shaft Side Elevation at Collar D-202

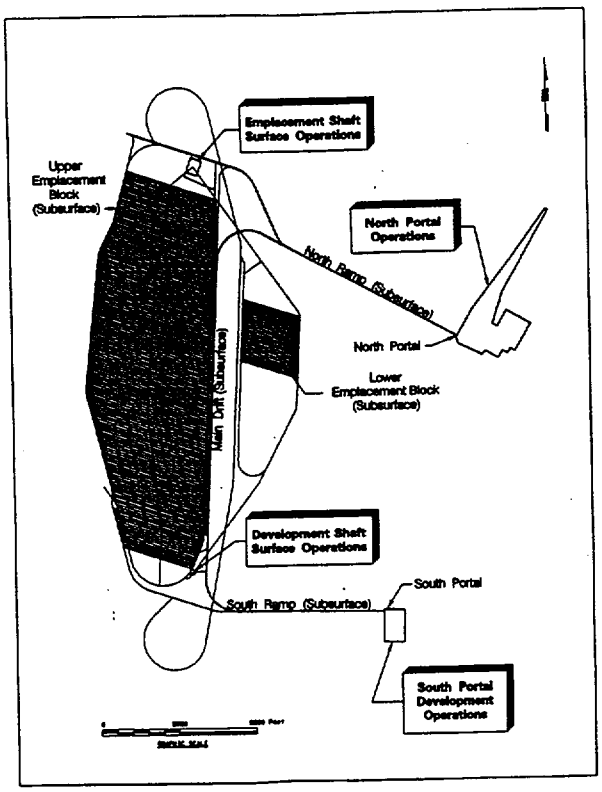

Figure 7.1.1-1. Overall Repository Site Map

INTENTIONALLY LEFT BLANK

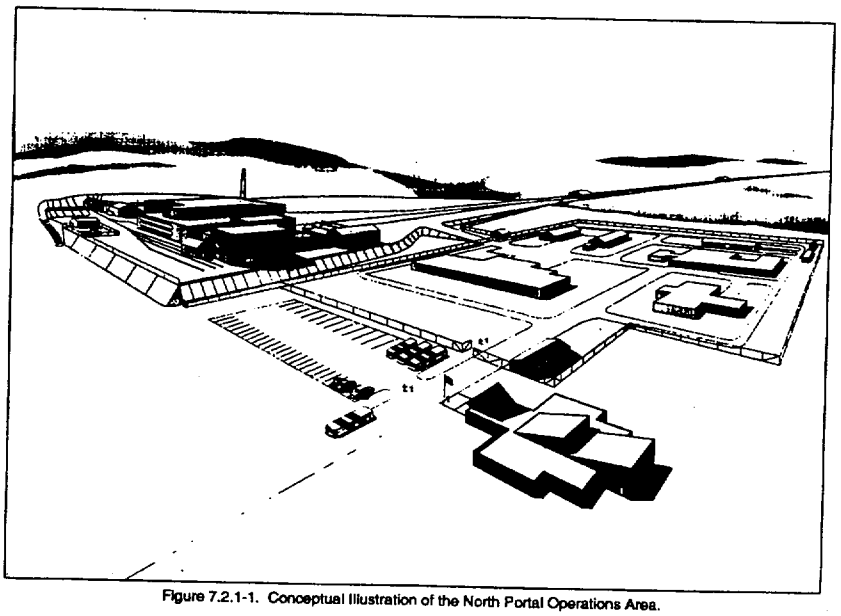

Figure 7.2.1-1. Conceptual Illustration of the North Portal Operations Area.

INTENTIONALLY LEFT BLANK

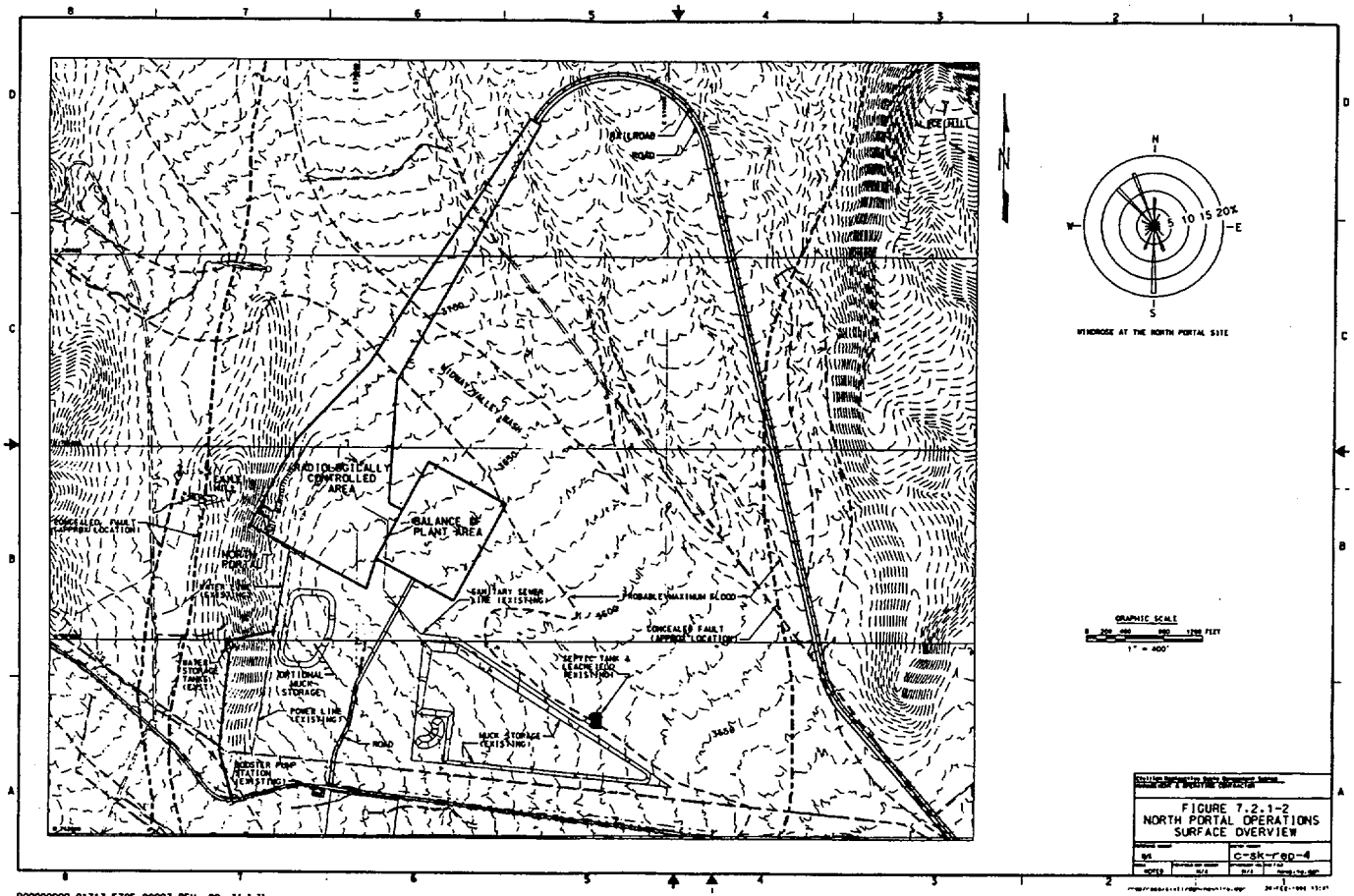
RAILROAD
ROAD
ICE PILE
N
WINDROSE AT THE NORTH PORTAL SITE
N
W
E
S
5
10
15
20%
STORM VALLEY BRANCH
3700
3650
RADIOLOGICALLY CONTROLLED AREA
BALANCE OF PLANT AREA
CANAL
CONCEALED FAULT (APPROX LOCATION)
NORTH PORTAL
WATER LINE (EXISTING)
SANITARY SEWER LINE (EXISTING)
PROBABLE MAXIMUM FLOOD
CONCEALED FAULT (APPROX LOCATION)
3600
WATER STORAGE TANKS (EXIST)
ADDITIONAL MUCK STORAGE
POWER LINE (EXISTING)
SEPTIC TANK & LEACHFIELD (EXISTING)
MUCK STORAGE (EXISTING)
ROAD
BOOSTER PUMP STATION (EXISTING)
3650
GRAPHIC SCALE
0 200 400 800 1200 FEET
1" = 400'
FIGURE 7.2.1-2
NORTH PORTAL OPERATIONS
SURFACE OVERVIEW
C-SK-POD-4

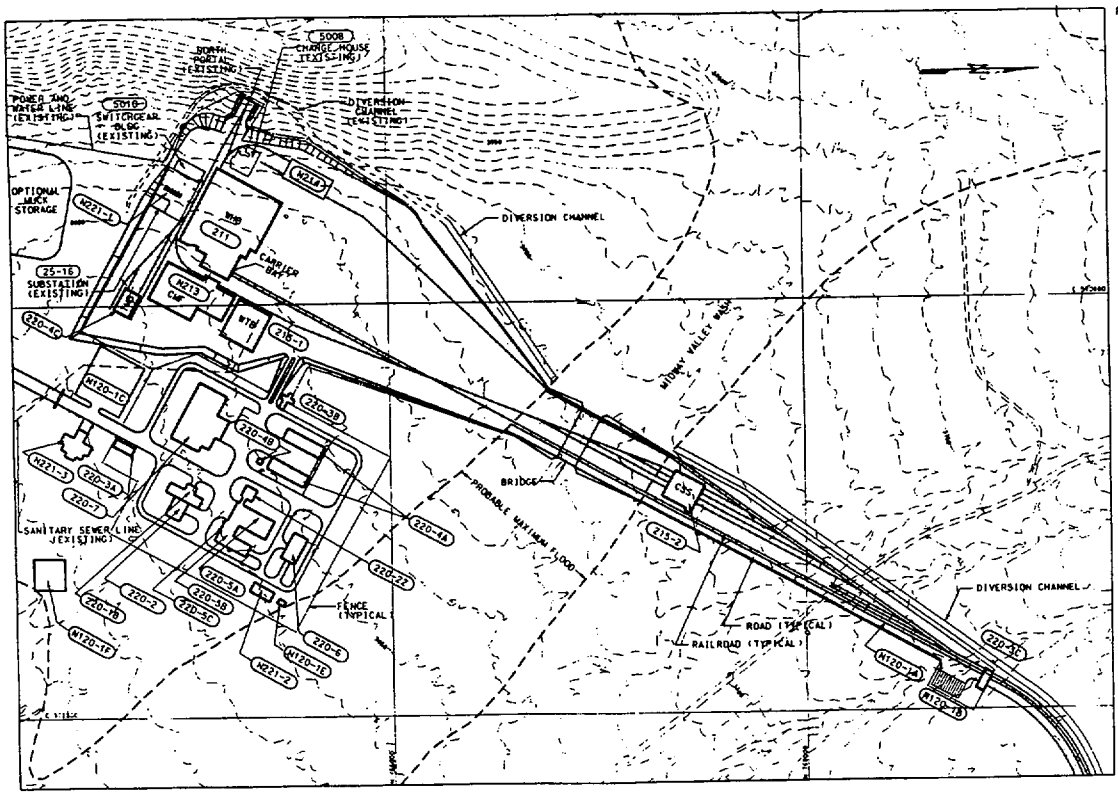

RADIOLOGICALLY CONTROLLED AREA FACILITIES

211	WASTE HANDLING BUILDING (WHB)
N213	CASK MAINTENANCE FACILITY (CMF)
N214	DC RECEIVING SHED
215-1	WASTE TREATMENT BUILDING (WTB)
215-2	CARRIER STAGING SHED (CSS)
220-4C	TRANSPORTER MAINTENANCE BUILDING (TMB)
N120-1A	RAIL PARKING
N120-1B	TRUCK PARKING
N221-1	STANDBY GENERATORS
25-16	SUBSTATION (EXISTING)
5008	CHANGE HOUSE (EXISTING)
5010	SWITCHGEAR BUILDING (EXISTING)

BALANCE OF PLANT AREA FACILITIES

220-3A	SECURITY STATION 1 (MAIN BOP PORTAL)
220-3B	SECURITY STATION 2 (RCA/BOP PORTAL)
220-3C	SECURITY STATION 3 (RCA TRUCK/RAIL PORTAL
220-5A	ADMINISTRATION BUILDING
220-5B	FOOD SERVICE FACILITY
220-5C	TRAINING AUDITORIUM
220-1B	MEDICAL CENTER
220-2	FIRE STATION
220-22	COMPUTER CENTER
220-7	CENTRAL WAREHOUSE
220-4A	CENTRAL SHOPS
220-4B	MOTOR POOL AND FACILITY SERVICE STATION
220-6	MOCKUP BUILDING
N120-1E	COOLING TOWER
N221-2	UTILITY BUILDING

SITE SERVICE FACILITIES

N120-1C	GENERAL PARKING
N120-1F	EVAPORATION POND
N221-3	VISITOR CENTER

GRAPHIC SCALE
0 100 200 400 600 FEET
1" = 200'

FIGURE 7.2.1-3
NORTH PORTAL OPERATIONS AREA SITE MAP

C-SK-rep-9

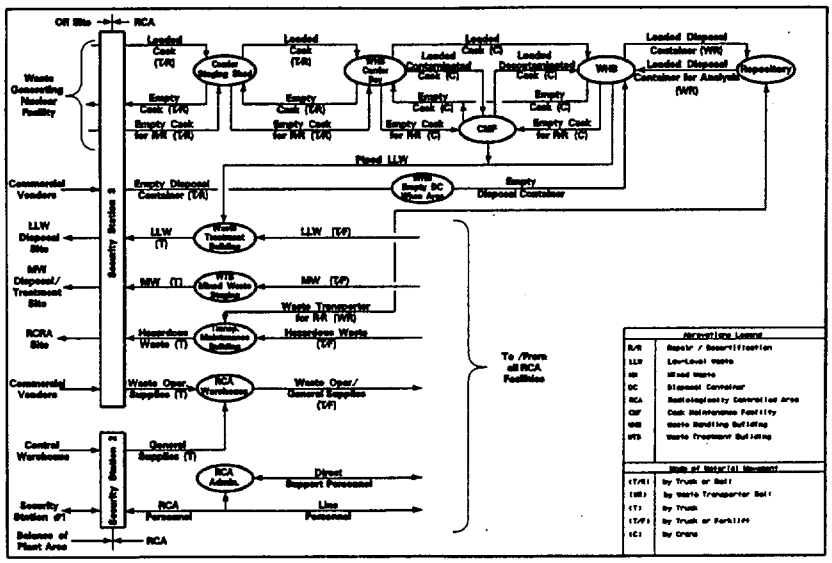

Figure 7.2.1-4. North Portal Operations - RCA Operations Flow

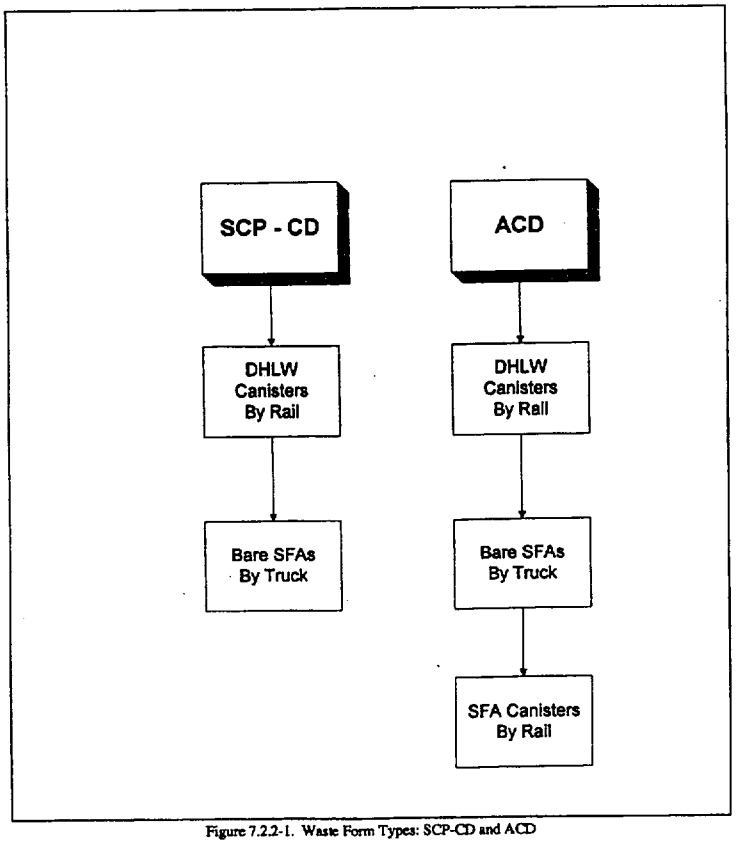

Figure 7.2.2-1. Waste Form Types: SCP-CD and ACD

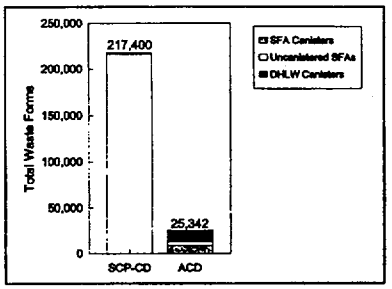

Figure 7.2.2-2. Waste Forms: SCP-CD and ACD

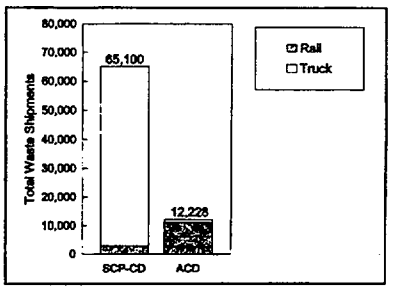

Figure 7.2.2-3. Mode of Transportation: SCP-CD and ACD

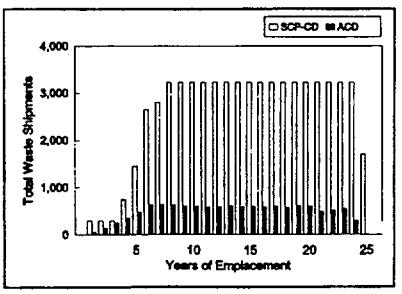

Figure 7.2.2-4. Number of Shipments: SCP-CD and ACD

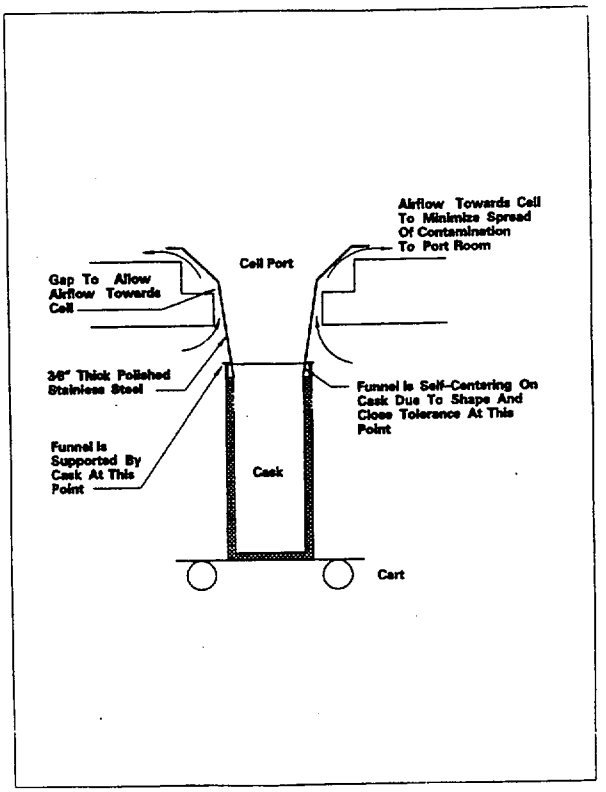

Figure 7.2.2-5 Cask-Cell DC-Cell Interface Method

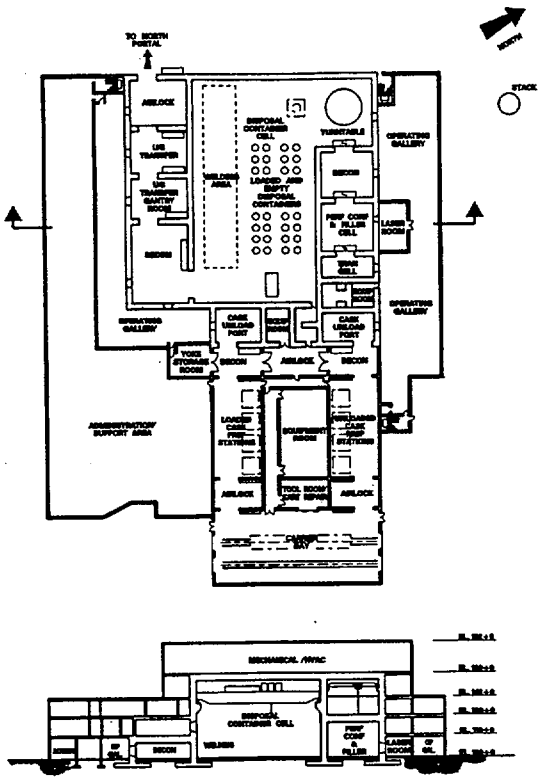

Figure 7.2.2-6. Waste Handling Building (Floor Plan and Building Section)

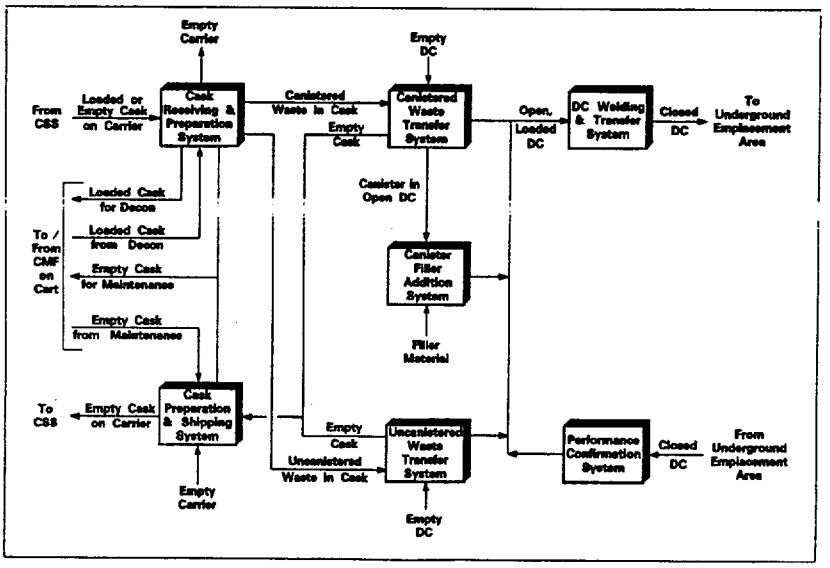

Figure 7.2.2-7. Waste Handling Systems Overview

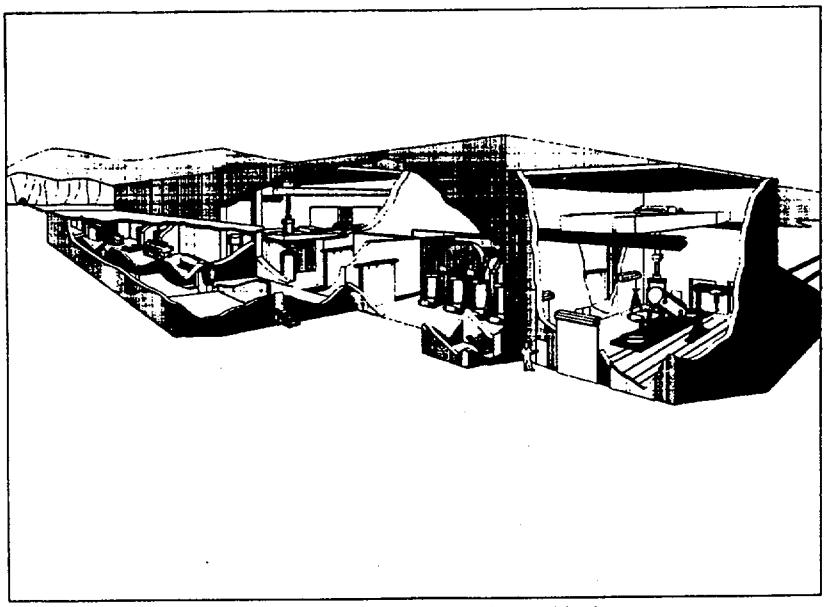

Figure 7.2.2.-8. Cask Receipt and Waste Canister Unloading

INTENTIONALLY LEFT BLANK

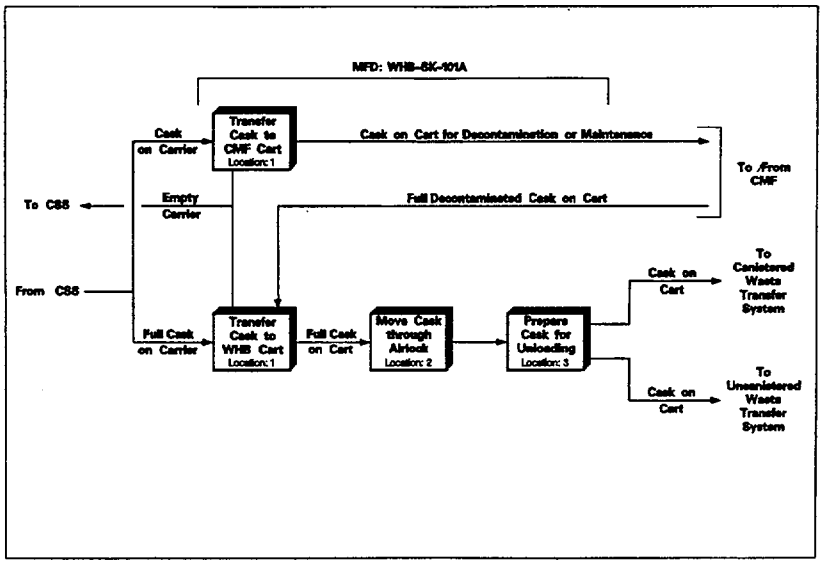

Figure 7.2.2-9. Cask Receiving & Preparation System

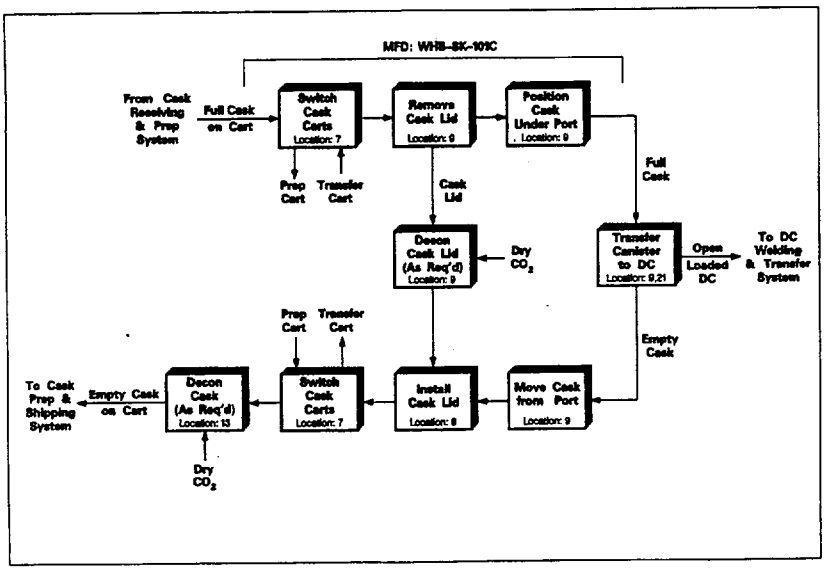

Figure 7.2.2–10. Canistered Waste Transfer System

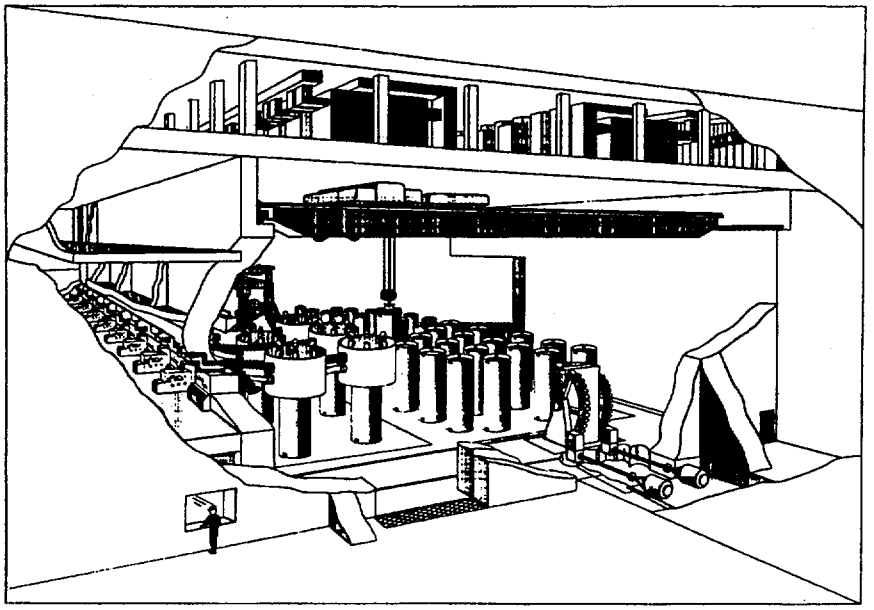

Figure 7.2.2-11. DC Welding and Staging.

INTENTIONALLY LEFT BLANK

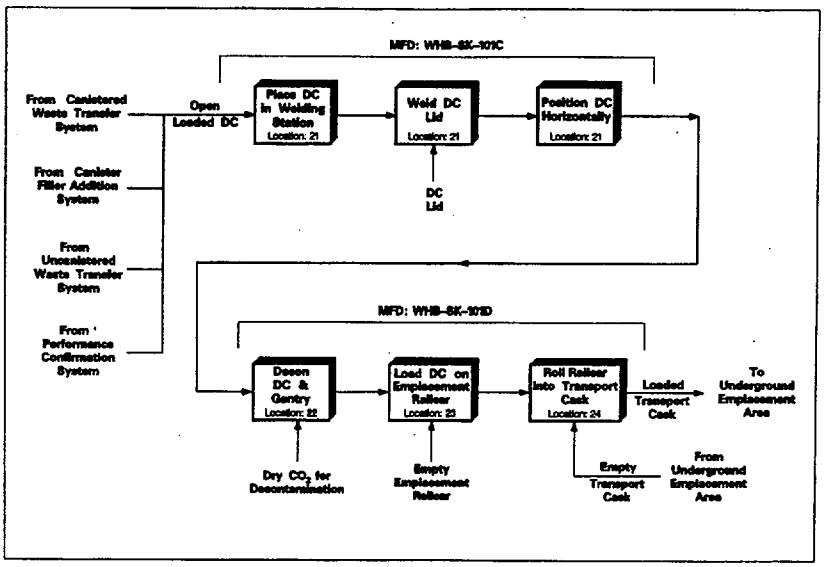

Figure 7.2.2-12. DC Welding & Transfer Systems

INTENTIONALLY LEFT BLANK

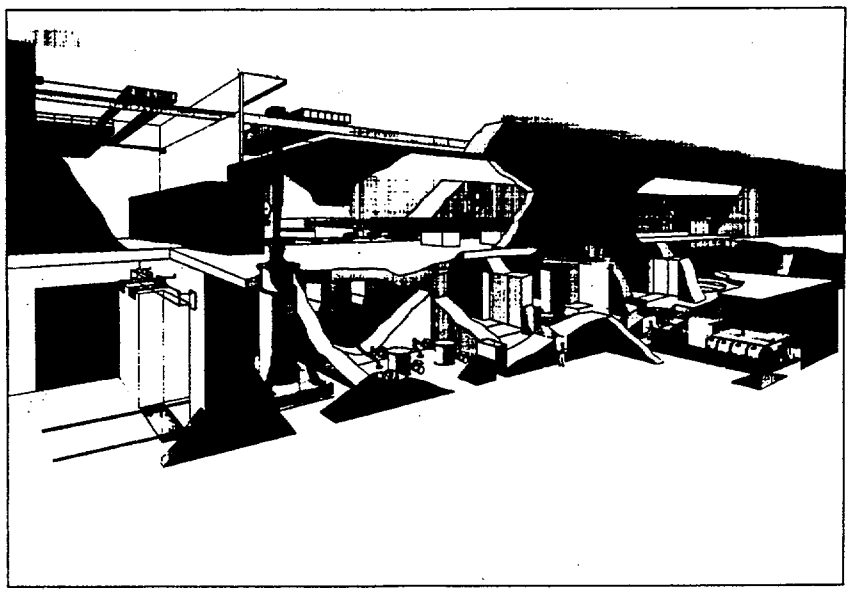

Figure 7.2.2-13. SFA Unloading, Canister Filling and Performance Confirmation.

INTENTIONALLY LEFT BLANK

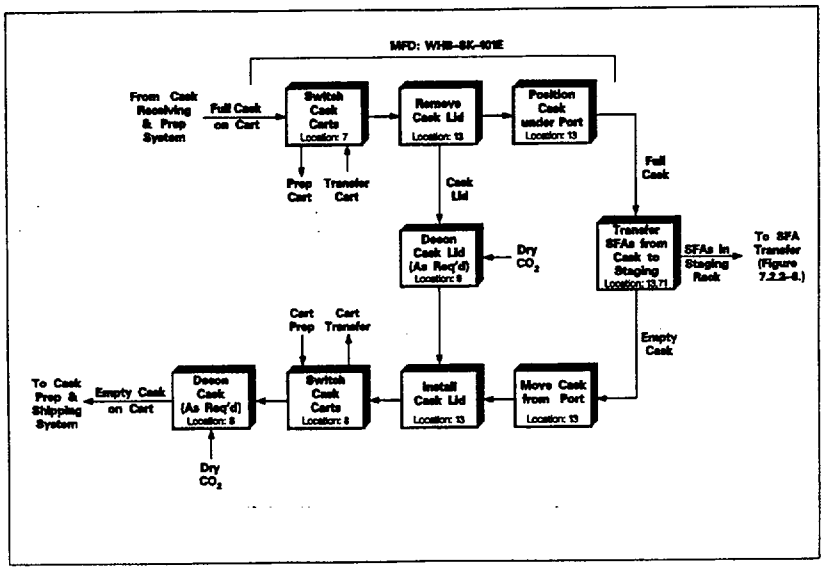

Figure 7.2.2-14. Uncanistered Waste Transfer System (page 1 of 2)

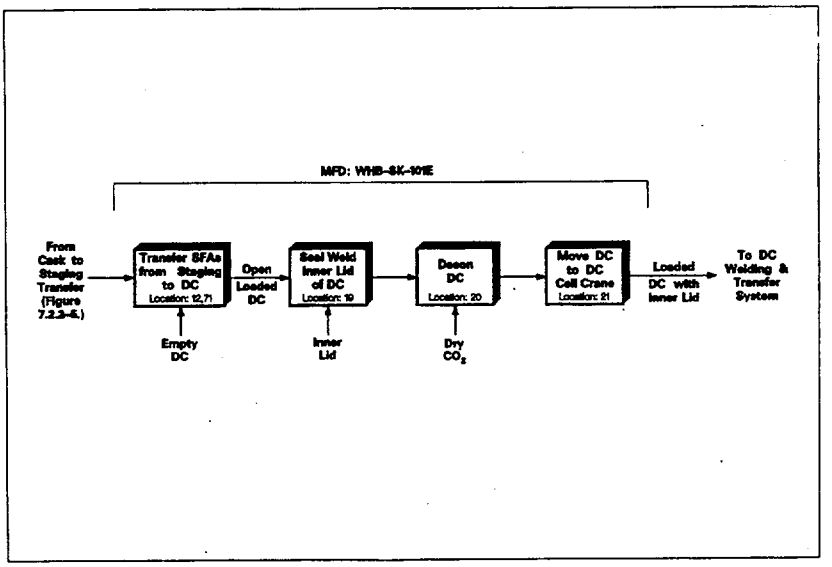

Figure 7.2.2-15. Uncanistered Waste Transfer System (page 2 of 2)

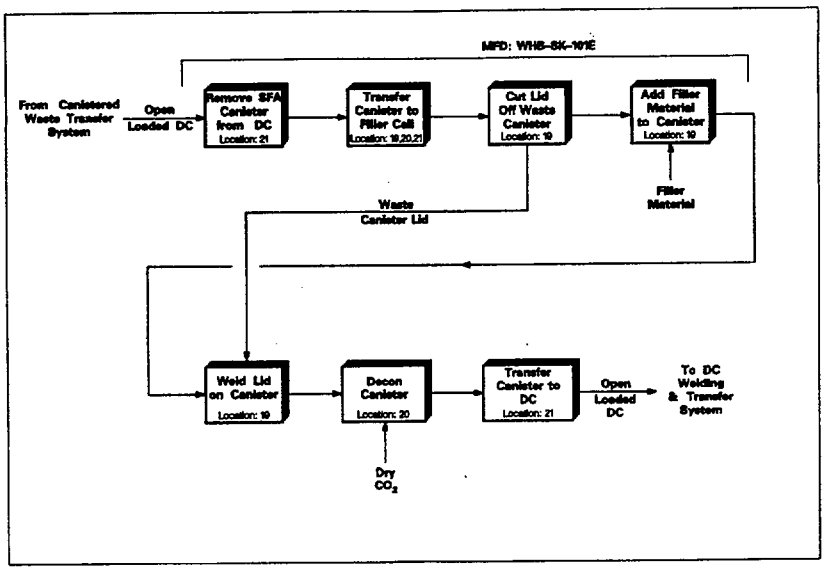

Figure 7.2.2-16. Canister Filler Addition System

INTENTIONALLY LEFT BLANK

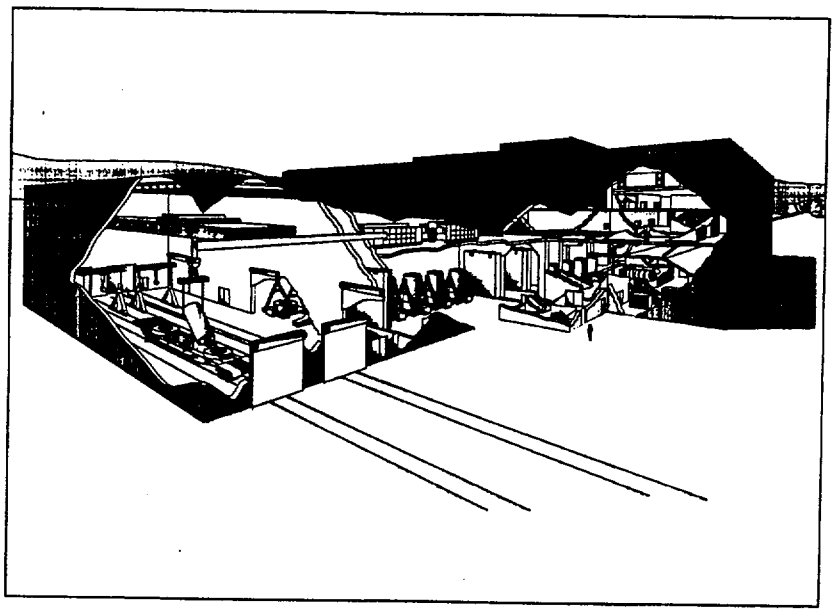

Figure 7.2.2-17. Cask Preparation and Shipping.

INTENTIONALLY LEFT BLANK

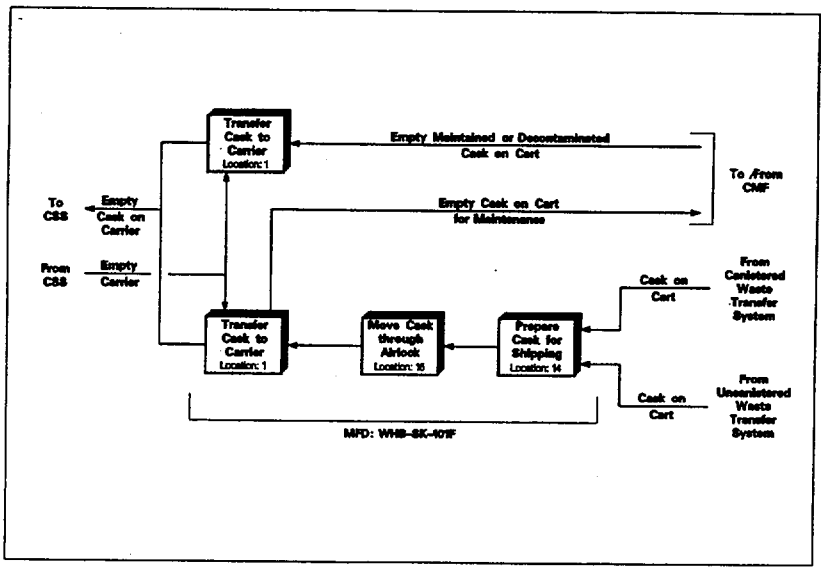

Figure 7.2.2-18. Cask Preparation & Shipping System

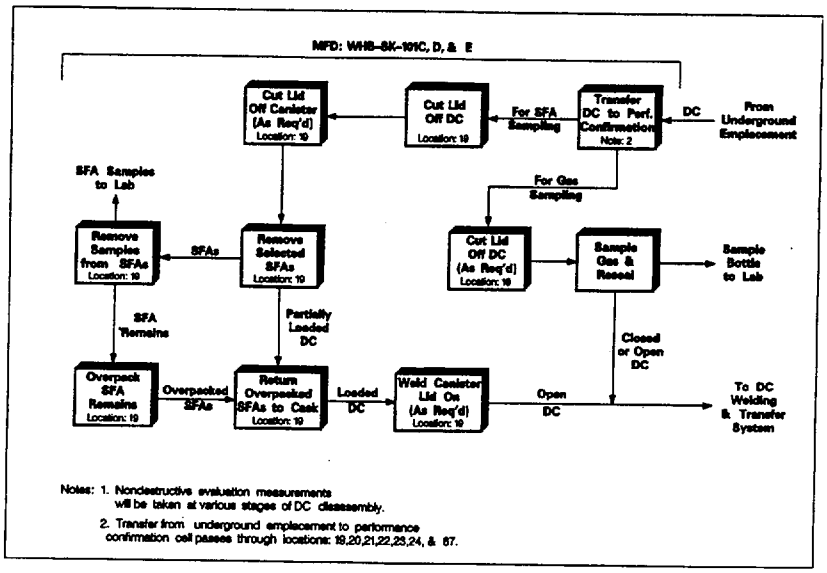

Figure 7.2.2-19. Performance Confirmation System

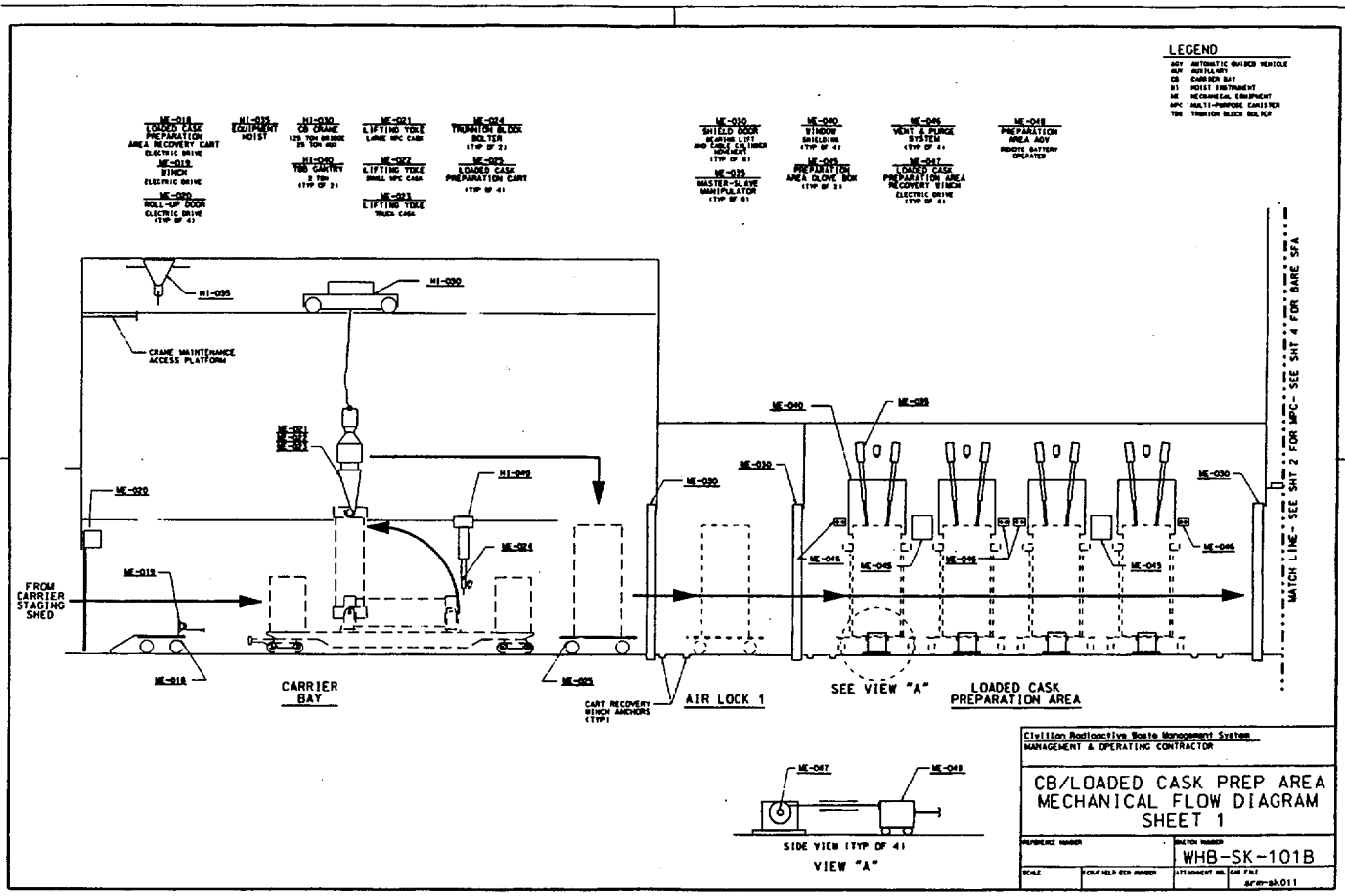
LEGEND
AGV AUTOMATIC GUIDED VEHICLE
AUX AUXILIARY
CB CARRIER BAY
HI HOIST INSTRUMENT
ME MECHANICAL EQUIPMENT
MPC MULTI-PURPOSE CANISTER
TBB TRUNNION BLOCK BOLTER
ME-018 LOADED CASK PREPARATION AREA RECOVERY CART ELECTRIC DRIVE
ME-019 WINCH ELECTRIC DRIVE
ME-020 ROLL-UP DOOR ELECTRIC DRIVE (TYP OF 4)
HI-035 EQUIPMENT HOIST
HI-030 CB CRANE 125 TON BRIDGE 25 TON AUX
HI-040 TBB GANTRY 3 TON (TYP OF 2)
ME-021 LIFTING YOKE LARGE MPC CASK
ME-022 LIFTING YOKE SMALL MPC CASK
ME-023 LIFTING YOKE WHOLE CASK
ME-024 TRUNNION BLOCK BOLTER (TYP OF 2)
ME-025 LOADED CASK PREPARATION CART (TYP OF 4)
ME-030 SHIELD DOOR HEAVIER LIFT AND CABLE EXTENDER MOVEMENT (TYP OF 6)
ME-035 MASTER-SLAVE MANIPULATOR (TYP OF 6)
ME-040 WINDOW SHIELDING (TYP OF 4)
ME-045 PREPARATION AREA GLOVE BOX (TYP OF 3)
ME-046 VENT & PURGE SYSTEM (TYP OF 4)
ME-047 LOADED CASK PREPARATION AREA RECOVERY WINCH ELECTRIC DRIVE (TYP OF 4)
ME-048 PREPARATION AREA AGV REMOTE BATTERY OPERATED
HI-035
HI-030
CRANE MAINTENANCE ACCESS PLATFORM
ME-021
ME-022
ME-023
HI-040
ME-024
ME-020
ME-019
FROM CARRIER STAGING SHED
ME-018
CARRIER BAY
ME-025
CART RECOVERY WINCH ANCHORS (TYP)
ME-030
AIR LOCK 1
ME-040
ME-035
ME-045
ME-046
SEE VIEW "A"
LOADED CASK PREPARATION AREA
MATCH LINE - SEE SHT 2 FOR MPC - SEE SHT 4 FOR BARE SFA
ME-047
ME-048
SIDE VIEW (TYP OF 4)
VIEW "A"
Civilian Radioactive Waste Management System
MANAGEMENT & OPERATING CONTRACTOR
CB/LOADED CASK PREP AREA
MECHANICAL FLOW DIAGRAM
SHEET 1
WHB-SK-101B
arm-sk011
16-FEB-1996 14:27

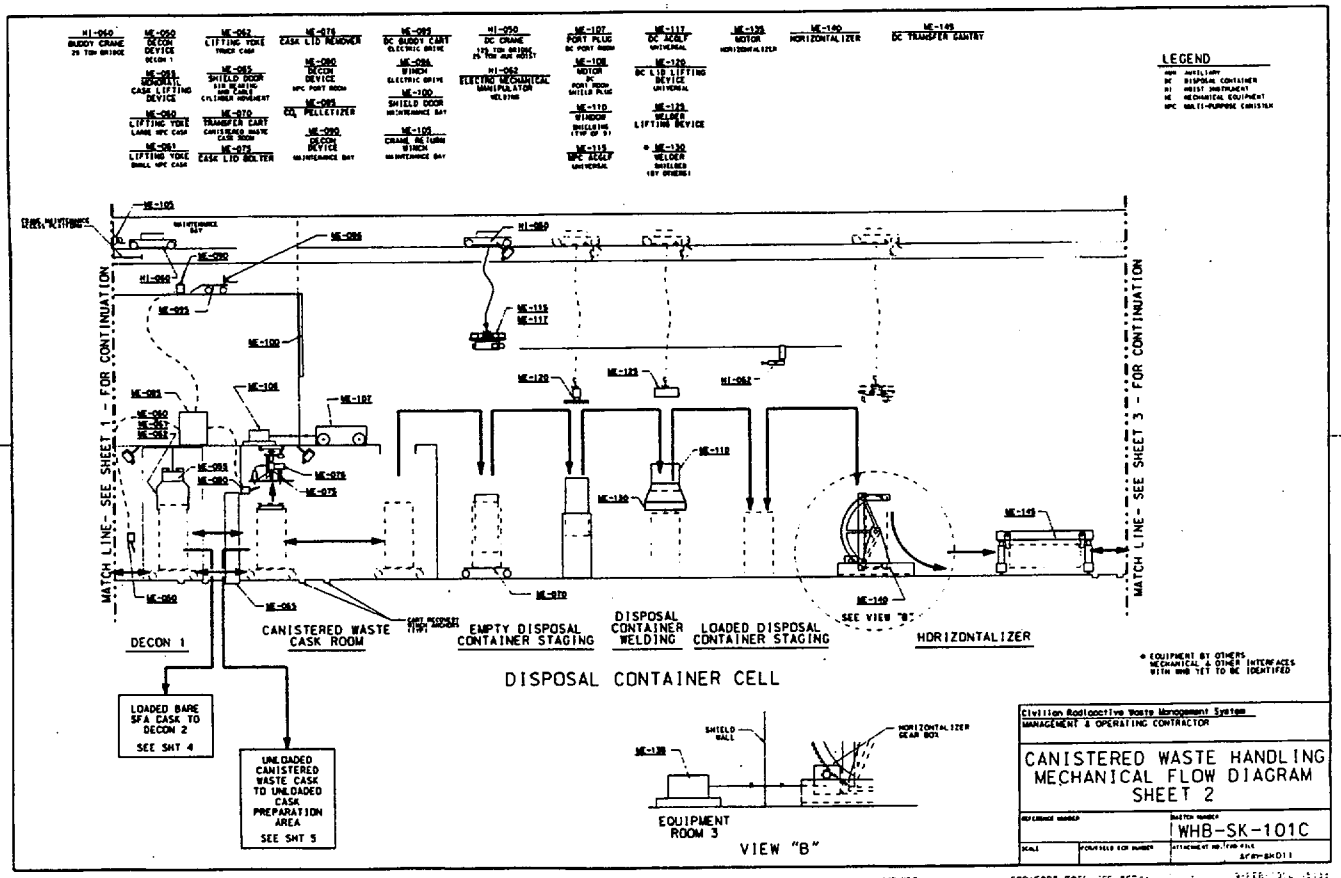
LEGEND
MATCH LINE - SEE SHEET 1 - FOR CONTINUATION
MATCH LINE - SEE SHEET 3 - FOR CONTINUATION
DECON 1
CANISTERED WASTE CASK ROOM
EMPTY DISPOSAL CONTAINER STAGING
DISPOSAL CONTAINER WELDING
LOADED DISPOSAL CONTAINER STAGING
HORIZONTALIZER
SEE VIEW "B"
DISPOSAL CONTAINER CELL
LOADED BARE SFA CASK TO DECON 2
SEE SHT 4
UNLOADED CANISTERED WASTE CASK TO UNLOADED CASK PREPARATION AREA
SEE SHT 5
SHIELD WALL
HORIZONTALIZER GEAR BOX
EQUIPMENT ROOM 3
VIEW "B"
Civilian Radioactive Waste Management System
MANAGEMENT & OPERATING CONTRACTOR
CANISTERED WASTE HANDLING MECHANICAL FLOW DIAGRAM SHEET 2
WHB-SK-101C

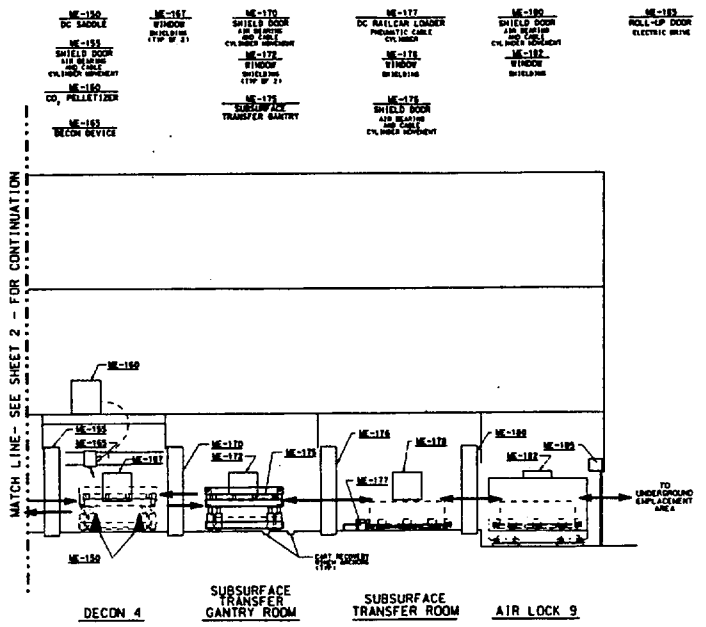

Civilian Radioactive Waste Management System
MANAGEMENT & OPERATING CONTRACTOR

SUBSURFACE TRANSFER MECHANICAL FLOW DIAGRAM SHEET 3

WHB-SK-101D

srm-sk011

/rep/reps/mech/dgn/srm-sk011.dgn 16-FEB-1996 14:32

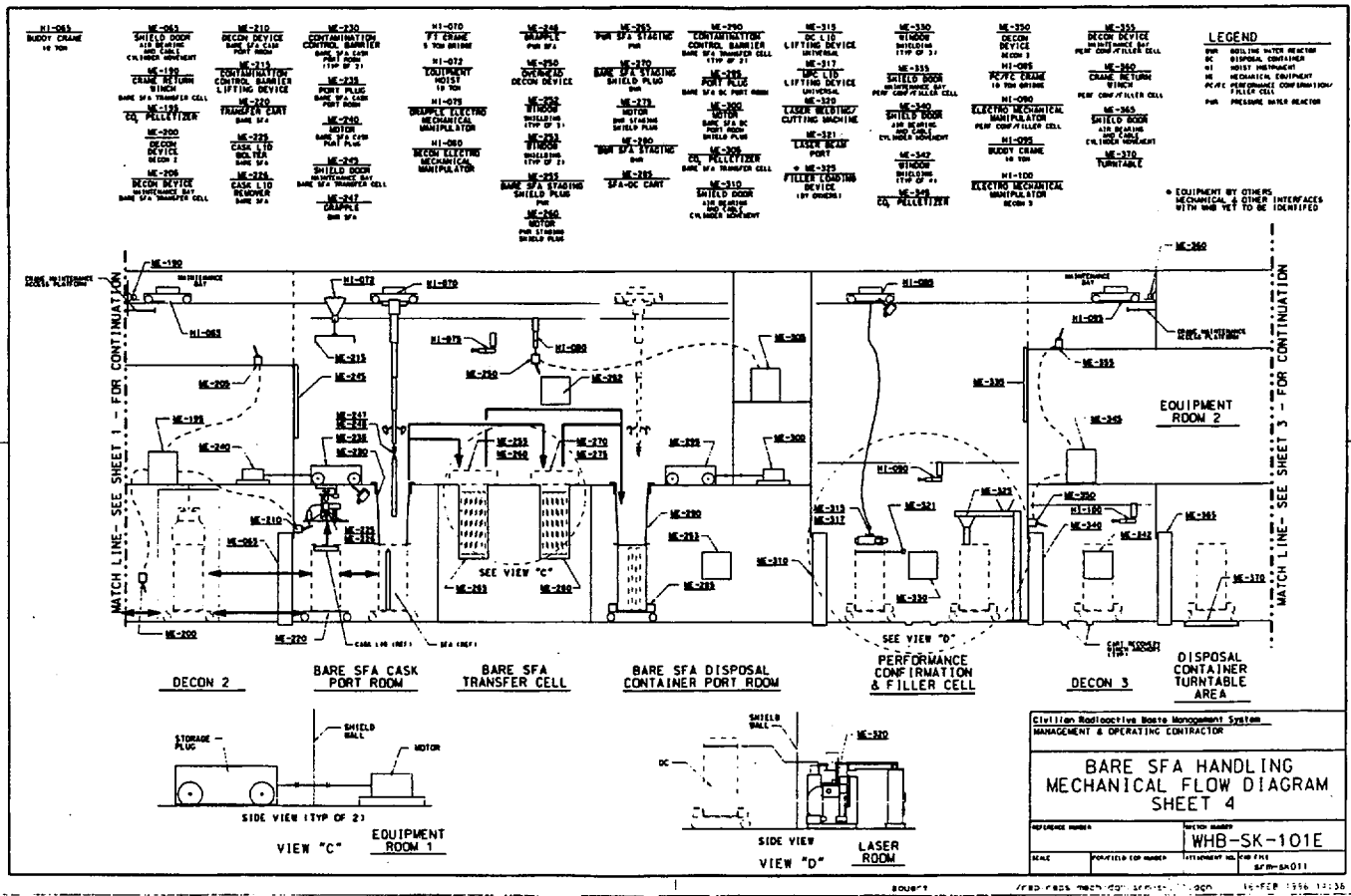
LEGEND
MATCH LINE - SEE SHEET 1 - FOR CONTINUATION
MATCH LINE - SEE SHEET 3 - FOR CONTINUATION
EQUIPMENT ROOM 2
SEE VIEW "C"
SEE VIEW "D"
DECON 2
BARE SFA CASK PORT ROOM
BARE SFA TRANSFER CELL
BARE SFA DISPOSAL CONTAINER PORT ROOM
PERFORMANCE CONFIRMATION & FILLER CELL
DECON 3
DISPOSAL CONTAINER TURNTABLE AREA
SIDE VIEW (TYP OF 2)
VIEW "C"
EQUIPMENT ROOM 1
SIDE VIEW
VIEW "D"
LASER ROOM
Civilian Radioactive Waste Management System
MANAGEMENT & OPERATING CONTRACTOR
BARE SFA HANDLING MECHANICAL FLOW DIAGRAM SHEET 4
WHB-SK-101E

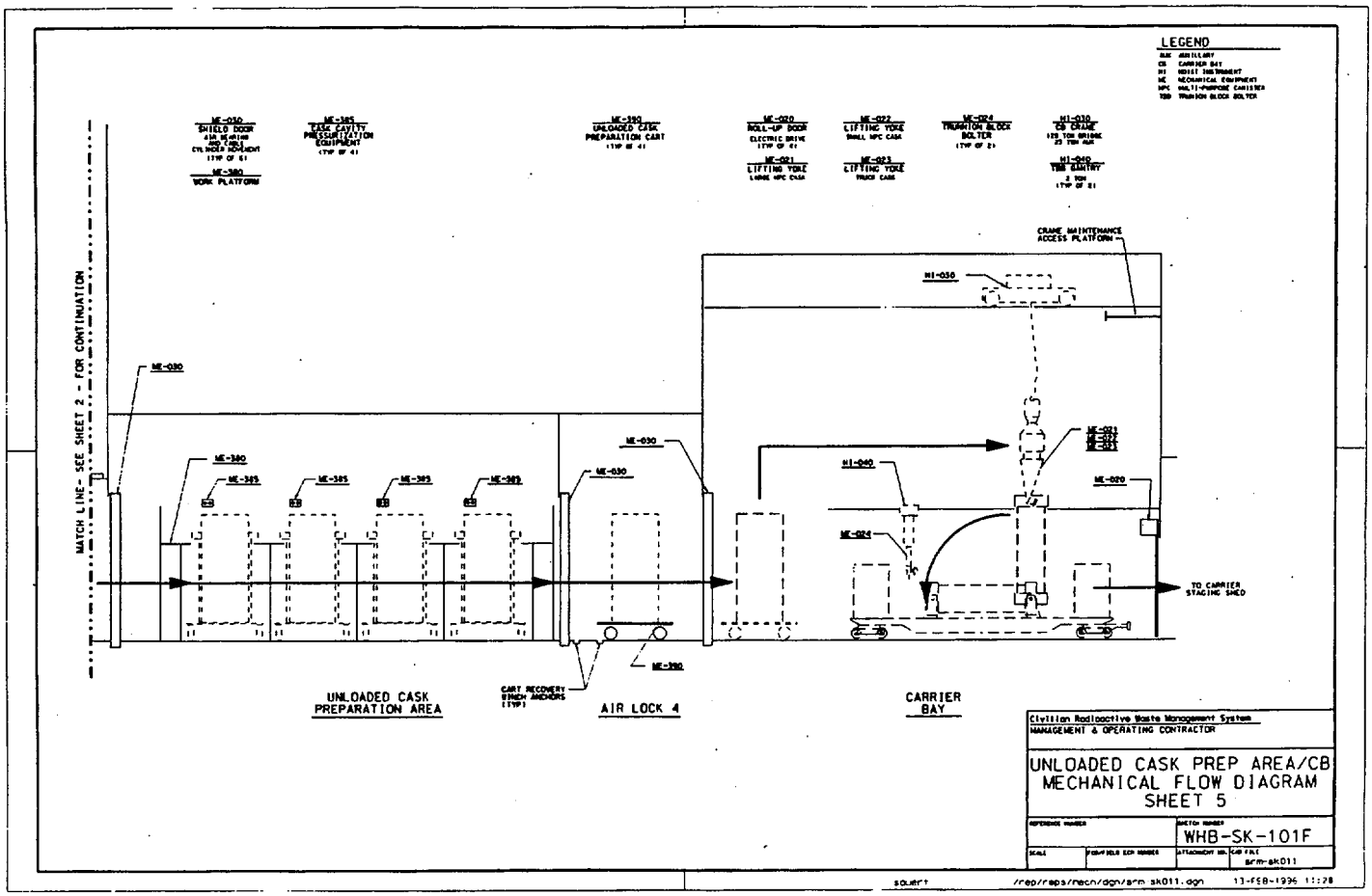
LEGEND
AUX AUXILIARY
CB CARRIER BAY
HI HOIST INSTRUMENT
MC MECHANICAL EQUIPMENT
MPC MULTI-PURPOSE CANISTER
TBB TRUNION BLOCK BOLTER
ME-010
SHIELD DOOR
ME-380
WORK PLATFORM
ME-385
CASK CAVITY PRESSURIZATION EQUIPMENT
(TYP OF 4)
ME-390
UNLOADED CASK PREPARATION CART
(TYP OF 4)
ME-020
ROLL-UP DOOR
ELECTRIC DRIVE
(TYP OF 2)
ME-021
LIFTING YOKE
LARGE MPC CASK
ME-022
LIFTING YOKE
SMALL MPC CASK
ME-023
LIFTING YOKE
TRUCK CASK
ME-024
TRUNNION BLOCK BOLTER
(TYP OF 2)
HI-030
CB CRANE
HI-040
TBB GANTRY
2 TON
(TYP OF 2)
CRANE MAINTENANCE ACCESS PLATFORM
HI-030
MATCH LINE - SEE SHEET 2 - FOR CONTINUATION
ME-010
ME-380
ME-385
ME-390
ME-020
HI-040
ME-024
TO CARRIER STAGING SHED
CART RECOVERY WINCH ANCHORS (TYP)
UNLOADED CASK PREPARATION AREA
AIR LOCK 4
CARRIER BAY
Civilian Radioactive Waste Management System
MANAGEMENT & OPERATING CONTRACTOR
UNLOADED CASK PREP AREA/CB
MECHANICAL FLOW DIAGRAM
SHEET 5
WHB-SK-101F
arm-sk011
/rep/reps/mech/dgn/arm sk011.dgn
11-FEB-1996 11:28

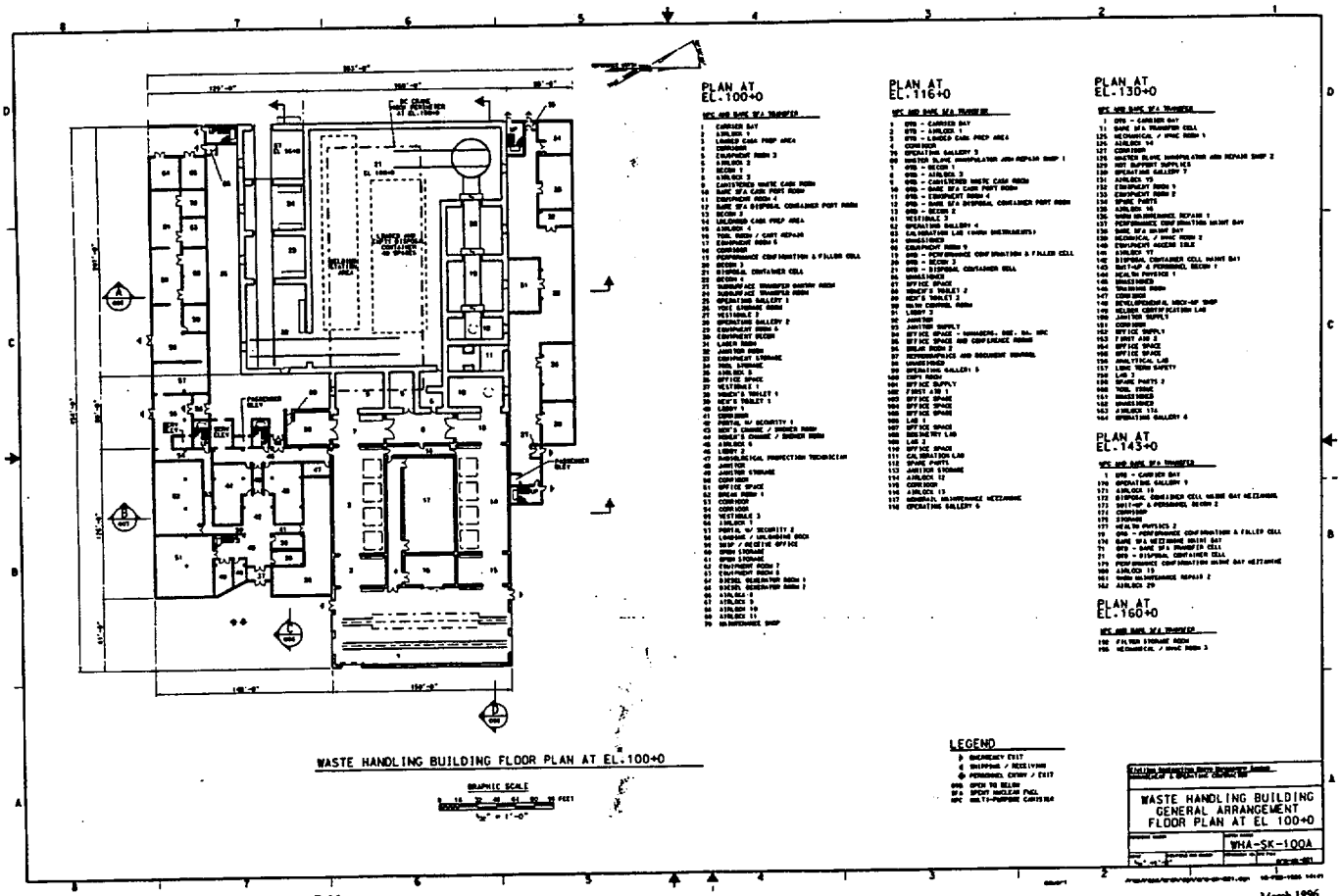
PLAN AT EL.100+0
PLAN AT EL.116+0
PLAN AT EL.130+0
PLAN AT EL.145+0
PLAN AT EL.160+0
LEGEND
WASTE HANDLING BUILDING FLOOR PLAN AT EL.100+0
GRAPHIC SCALE
WASTE HANDLING BUILDING GENERAL ARRANGEMENT FLOOR PLAN AT EL 100+0
WHA-SK-100A

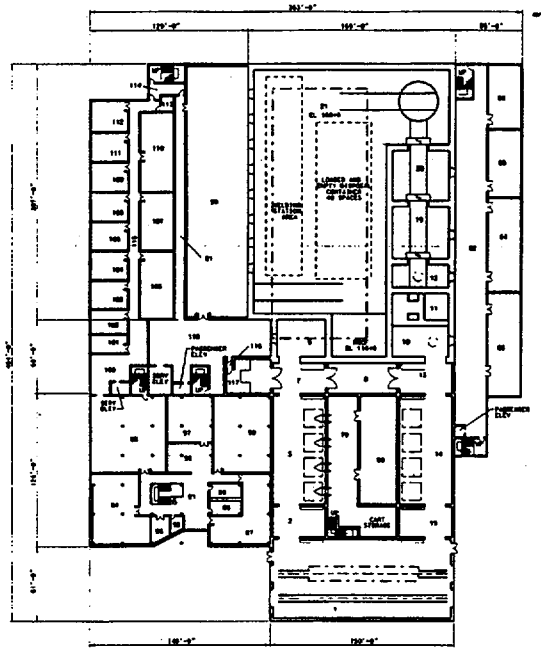

WASTE HANDLING BUILDING FLOOR PLAN AT EL.116+0

GRAPHIC SCALE

PLAN AT EL.100+0

WPC AND BARE SFA TRANSFER

1 CARRIER BAY
2 AIRLOCK 1
3 LOADED CASK PREP AREA
4 CORRIDOR
5 EQUIPMENT ROOM 1
6 AIRLOCK 2
7 DECON 1
8 AIRLOCK 3
9 CONSTRICTED WASTE CASK ROOM
10 BARE SFA CASK PORT ROOM
11 EQUIPMENT ROOM 4
12 BARE SFA DISPOSAL CONTAINER PORT ROOM
13 DECON 2
14 UNLOADED CASK PREP AREA
15 AIRLOCK 4
16 TOOL ROOM / CART REPAIR
17 EQUIPMENT ROOM 6
18 CORRIDOR
19 PERFORMANCE CONFIRMATION & FILLER CELL
20 DECON 3
21 DISPOSAL CONTAINER CELL
22 DECON 4
23 SUBSURFACE TRANSFER SAMPLE ROOM
24 SUBSURFACE TRANSFER ROOM
25 OPERATING GALLERY 1
26 HOLD STORAGE ROOM
27 VESTIBULE 2
28 OPERATING GALLERY 2
29 EQUIPMENT ROOM 5
30 EQUIPMENT DECON
31 LINEN ROOM
32 JANITOR ROOM
33 EQUIPMENT STORAGE
34 TOOL STORAGE
35 AIRLOCK 5
36 OFFICE SPACE
37 VESTIBULE 1
38 WOMEN'S TOILET 1
39 MEN'S TOILET 1
40 LOBBY 1
41 CORRIDOR
42 PORTAL W/ SECURITY 1
43 MEN'S CHANGE / SHOWER ROOM
44 WOMEN'S CHANGE / SHOWER ROOM
45 AIRLOCK 6
46 LOBBY 2
47 RADIOLOGICAL PROTECTION TECHNICIAN
48 JANITOR
49 JANITOR STORAGE
50 CORRIDOR
51 OFFICE SPACE
52 BREAK ROOM 1
53 CORRIDOR
54 CORRIDOR
55 VESTIBULE 3
56 AIRLOCK 7
57 PORTAL W/ SECURITY 2
58 LOADING / UNLOADING DOCK
59 SHIP / RECEIVE OFFICE
60 OPEN STORAGE
61 OPEN STORAGE
62 EQUIPMENT ROOM 7
63 EQUIPMENT ROOM 8
64 DIESEL GENERATOR ROOM 1
65 DIESEL GENERATOR ROOM 2
66 AIRLOCK 8
67 AIRLOCK 9
68 AIRLOCK 10
69 AIRLOCK 11
70 MAINTENANCE SHOP

PLAN AT EL.116+0

WPC AND BARE SFA TRANSFER

1 DFD - CARRIER BAY
2 DFD - AIRLOCK 1
3 DFD - LOADED CASK PREP AREA
4 CORRIDOR
79 OPERATING GALLERY 3
80 MASTER BLADE MANIPULATOR ARM REPAIR SHOP 1
7 DFD - DECON 1
8 DFD - AIRLOCK 3
9 DFD - CONSTRICTED WASTE CASK ROOM
10 DFD - BARE SFA CASK PORT ROOM
11 DFD - EQUIPMENT ROOM 4
12 DFD - BARE SFA DISPOSAL CONTAINER PORT ROOM
13 DFD - DECON 2
81 VESTIBULE 3
82 OPERATING GALLERY 4
83 CALIBRATION LAB (HAND INSTRUMENTS)
84 WORKSHOP
85 EQUIPMENT ROOM 9
15 DFD - PERFORMANCE CONFIRMATION & FILLER CELL
20 DFD - DECON 3
21 DFD - DISPOSAL CONTAINER CELL
86 WORKSHOP
87 OFFICE SPACE
88 WOMEN'S TOILET 2
89 MEN'S TOILET 2
90 AIR CONTROL ROOM
91 LOBBY 3
92 JANITOR
93 JANITOR SUPPLY
94 OFFICE SPACE - ENGINEERS, SUP. ENG
95 OFFICE SPACE AND CONFERENCE ROOM
96 BREAK ROOM 2
97 REPROGRAPHICS AND DOCUMENT CONTROL
98 WORKSHOP
99 OPERATING GALLERY 5
100 GOFT ROOM
101 OFFICE SUPPLY
102 FIRST AID 1
103 OFFICE SPACE
104 OFFICE SPACE
105 OFFICE SPACE
106 LAB 1
107 OFFICE SPACE
108 DOSIMETRY LAB
109 LAB 2
110 OFFICE SPACE
111 CALIBRATION LAB
112 SPARE PARTS
113 JANITOR STORAGE
114 AIRLOCK 12
115 CORRIDOR
116 AIRLOCK 13
117 NORMAL MAINTENANCE MEZZANINE
118 OPERATING GALLERY 6

PLAN AT EL.130+0

WPC AND BARE SFA TRANSFER

1 DFD - CARRIER BAY
71 BARE SFA TRANSFER CELL
119 MECHANICAL / HVAC ROOM 1
124 AIRLOCK 14
127 CORRIDOR
128 MASTER BLADE MANIPULATOR ARM REPAIR SHOP 2
129 ART SUPPORT SUPPLIES
130 OPERATING GALLERY 7
131 AIRLOCK 15
132 EQUIPMENT ROOM 1
133 EQUIPMENT ROOM 2
134 SPARE PARTS
135 AIRLOCK 16
136 HVAC MAINTENANCE REPAIR 1
137 PERFORMANCE CONFIRMATION SHIPT BAY
138 BARE SFA SHIPT BAY
139 MECHANICAL / HVAC ROOM 2
140 EQUIPMENT ACCESS TOLE
141 AIRLOCK 17
142 DISPOSAL CONTAINER CELL SHIPT BAY
143 SHIP-UP & PERSONNEL DECON 1
144 HEALTH PHYSICS 1
145 WORKSHOP
146 TRAINING ROOM
147 CORRIDOR
148 DEVELOPMENTAL MOCK-UP SHOP
149 WELDER CERTIFICATION LAB
150 JANITOR SUPPLY
151 CORRIDOR
152 OFFICE SUPPLY
153 FIRST AID 2
154 OFFICE SPACE
155 OFFICE SPACE
156 ANALYTICAL LAB
157 LOWE TEMP SAFETY
158 LAB 3
159 SPARE PARTS 2
160 TOOL CRIBS
161 WORKSHOP
162 WORKSHOP
163 AIRLOCK 17A
164 OPERATING GALLERY 8

PLAN AT EL.145+0

WPC AND BARE SFA TRANSFER

1 DFD - CARRIER BAY
170 OPERATING GALLERY 9
171 AIRLOCK 18
172 DISPOSAL CONTAINER CELL SHIPPT BAY MEZZANINE
173 SHIP-UP & PERSONNEL DECON 2
174 CORRIDOR
175 STORAGE
177 HEALTH PHYSICS 2
21 DFD - PERFORMANCE CONFIRMATION & FILLER CELL
178 BARE SFA MEZZANINE SHIPT BAY
71 DFD - BARE SFA TRANSFER CELL
21 DFD - DISPOSAL CONTAINER CELL
179 PERFORMANCE CONFIRMATION SHIPT BAY MEZZANINE
180 AIRLOCK 19
181 HVAC MAINTENANCE REPAIR 2
182 AIRLOCK 20

PLAN AT EL.160+0

WPC AND BARE SFA TRANSFER

192 FILTER STORAGE ROOM
193 MECHANICAL / HVAC ROOM 3

LEGEND

- EMERGENCY EXIT
- SHIPPING / RECEIVING
- PERSONNEL ENTRY / EXIT
- OPEN TO BELOW
- SPENT NUCLEAR FUEL
- MULTI-PURPOSE CANISTER

WASTE HANDLING BUILDING
GENERAL ARRANGEMENT
FLOOR PLAN AT EL 116+0

WHA-SK-1008

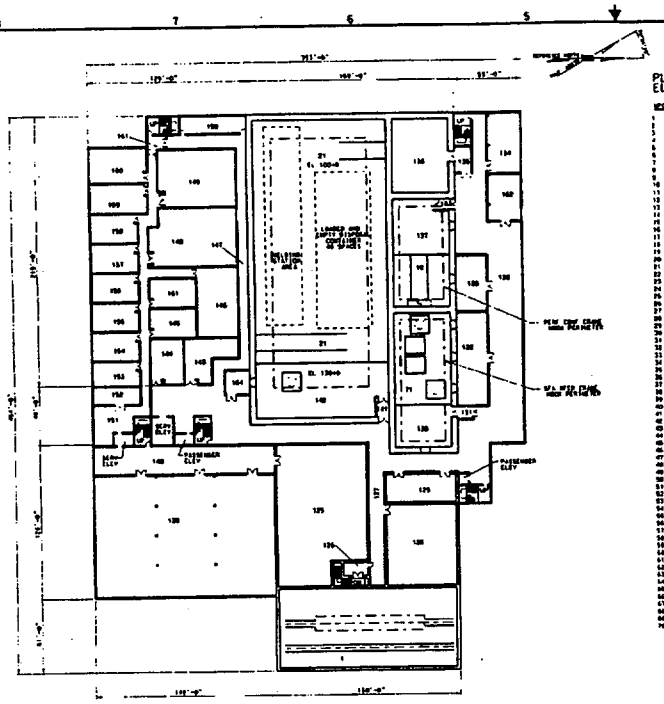

PLAN AT EL.100+0

1	CARRIER BAY
2	AIRLOCK 1
3	LOADED CASK PREP AREA
4	CORRIDOR
5	EQUIPMENT ROOM 2
6	AIRLOCK 2
7	DECON 1
8	AIRLOCK 3
9	CONSTRUCTED WASTE CASK ROOM
10	BARE SFA CASK PORT ROOM
11	EQUIPMENT ROOM 4
12	BARE SFA DISPOSAL CONTAINER PORT ROOM
13	DECON 2
14	UNLOADED CASK PREP AREA
15	AIRLOCK 4
16	TOOL ROOM / CART REPAIR
17	EQUIPMENT ROOM 5
18	CORRIDOR
19	PERFORMANCE CONFIRMATION & FILLER CELL
20	DECON 3
21	DISPOSAL CONTAINER CELL
22	DECON 4
23	DISPOSAL TRANSFER GANTRY ROOM
24	DISPOSAL TRANSFER ROOM
25	OPERATING GALLERY 1
26	HVAC STORAGE ROOM
27	VESTIBULE 2
28	OPERATING GALLERY 2
29	EQUIPMENT ROOM 6
30	EQUIPMENT DECON
31	LAUNDRY ROOM
32	JANITOR ROOM
33	EQUIPMENT STORAGE
34	TOOL STORAGE
35	AIRLOCK 5
36	OFFICE SPACE
37	VESTIBULE 1
38	WOMEN'S TOILET 1
39	MEN'S TOILET 1
40	LOBBY 1
41	CORRIDOR
42	POSTAL W/ SECURITY 1
43	MEN'S CHANGE / SHOWER ROOM
44	WOMEN'S CHANGE / SHOWER ROOM
45	AIRLOCK 6
46	LOBBY 2
47	RADIOLOGICAL PROTECTION TECHNICIAN
48	JANITOR
49	JANITOR STORAGE
50	CORRIDOR
51	OFFICE SPACE
52	BREAK ROOM 1
53	CORRIDOR
54	CORRIDOR
55	VESTIBULE 3
56	AIRLOCK 7
57	POSTAL W/ SECURITY 2
58	LOADING / UNLOADING DOCK
59	SHIP / RECEIVE OFFICE
60	OPEN STORAGE
61	OPEN STORAGE
62	EQUIPMENT ROOM 7
63	EQUIPMENT ROOM 8
64	DIESEL GENERATOR ROOM 1
65	DIESEL GENERATOR ROOM 2
66	AIRLOCK 8
67	AIRLOCK 9
68	AIRLOCK 10
69	AIRLOCK 11
70	MAINTENANCE SHOP

PLAN AT EL.116+0

1	DTS - CARRIER BAY
2	DTS - AIRLOCK 1
3	DTS - LOADED CASK PREP AREA
4	CORRIDOR
79	UPLIGHTING WALLWAY 3
80	WALTER BLANE MANIPULATOR ARM REPAIR SHOP 1
7	DTS - DECON 1
8	DTS - AIRLOCK 3
9	DTS - CONSTRUCTED WASTE CASK ROOM
10	DTS - BARE SFA CASK PORT ROOM
11	DTS - EQUIPMENT ROOM 4
12	DTS - BARE SFA DISPOSAL CONTAINER PORT ROOM
13	DTS - DECON 2
81	VESTIBULE 3
82	OPERATING GALLERY 4
83	CALIBRATION LAB (HAND INSTRUMENTS)
84	UNASSIGNED
85	EQUIPMENT ROOM 5
15	DTS - PERFORMANCE CONFIRMATION & FILLER CELL
20	DTS - DECON 3
21	DTS - DISPOSAL CONTAINER CELL
86	UNASSIGNED
87	OFFICE SPACE
88	WOMEN'S TOILET 2
89	MEN'S TOILET 2
90	SUN CONTROL ROOM
91	LOBBY 3
92	JANITOR
93	JANITOR SUPPLY
94	OFFICE SPACE - MANAGERS: DOE, BA, WRC
95	OFFICE SPACE AND CONFERENCE ROOMS
96	BREAK ROOM 2
97	REPRODUCTIONS AND DOCUMENT CONTROL
98	WASHROOMS
99	OPERATING GALLERY 5
100	COPY ROOM
101	OFFICE SUPPLY
102	FIRST AID 1
103	OFFICE SPACE
104	OFFICE SPACE
105	OFFICE SPACE
106	LAB 1
107	OFFICE SPACE
108	DOSIMETRY LAB
109	LAB 2
110	OFFICE SPACE
111	CALIBRATION LAB
112	SPARE PARTS
113	JANITOR STORAGE
114	AIRLOCK 12
115	CORRIDOR
116	AIRLOCK 13
117	MECHANICAL MAINTENANCE MEZZANINE
118	OPERATING GALLERY 6

PLAN AT EL.130+0

1	DTS - CARRIER BAY
71	BARE SFA TRANSFER CELL
125	MECHANICAL / HVAC ROOM 1
126	AIRLOCK 14
127	CORRIDOR
128	WALTER BLANE MANIPULATOR ARM REPAIR SHOP 2
129	HOT SUPPORT SUPPLIES
130	OPERATING GALLERY 7
131	AIRLOCK 15
132	EQUIPMENT ROOM 1
133	EQUIPMENT ROOM 2
134	SPARE PARTS
135	AIRLOCK 16
136	MAIN MAINTENANCE REPAIR 1
137	PERFORMANCE CONFIRMATION WASHOUT BAY
138	BARE SFA WASHOUT BAY
139	MECHANICAL / HVAC ROOM 2
140	EQUIPMENT ACCESS ISLE
141	AIRLOCK 17
142	DISPOSAL CONTAINER CELL WASHOUT BAY
143	SUIT-UP & PERSONNEL DECON 1
144	HEALTH PHYSICS 1
145	UNASSIGNED
146	TRAINING ROOM
147	CORRIDOR
148	DEVELOPMENTAL HOT-UP SHOP
149	WALKER CLASSIFICATION LAB
150	JANITOR SUPPLY
151	CORRIDOR
152	OFFICE SUPPLY
153	FIRST AID 2
154	OFFICE SPACE
155	OFFICE SPACE
156	ANALYTICAL LAB
157	CONC TEAM SAFETY
158	LAB 3
159	SPARE PARTS 2
160	TOOL TOOLS
161	WASHROOMS
162	WASHROOMS
163	AIRLOCK 17a
164	OPERATING GALLERY 8

PLAN AT EL.143+0

1	DTS - CARRIER BAY
170	OPERATING GALLERY 9
171	AIRLOCK 18
172	DISPOSAL CONTAINER CELL WASHOUT BAY MEZZANINE
173	SUIT-UP & PERSONNEL DECON 2
174	CORRIDOR
175	STORAGE
176	HEALTH PHYSICS 2
19	DTS - PERFORMANCE CONFIRMATION & FILLER CELL
178	BARE SFA MEZZANINE WASHOUT BAY
71	DTS - BARE SFA TRANSFER CELL
21	DTS - DISPOSAL CONTAINER CELL
179	PERFORMANCE CONFIRMATION WASHOUT BAY MEZZANINE
180	AIRLOCK 19
181	MAIN MAINTENANCE REPAIR 2
182	AIRLOCK 20

PLAN AT EL.160+0

192	FILTER STORAGE ROOM
193	MECHANICAL / HVAC ROOM 2

LEGEND

- EMERGENCY EXIT
- SHIPPING / RECEIVING
- PERSONNEL ENTRY / EXIT
- 000 OPEN TO BELOW
- SFA SPENT NUCLEAR FUEL
- MPC MULTI-PURPOSE CANISTER

WASTE HANDLING BUILDING FLOOR PLAN AT EL.130+0

GRAPHIC SCALE

Civilian Radioactive Waste Management System
MANAGEMENT & OPERATING CONTRACTOR

WASTE HANDLING BUILDING
GENERAL ARRANGEMENT
FLOOR PLAN AT EL 130+0

WHA-SK-100C

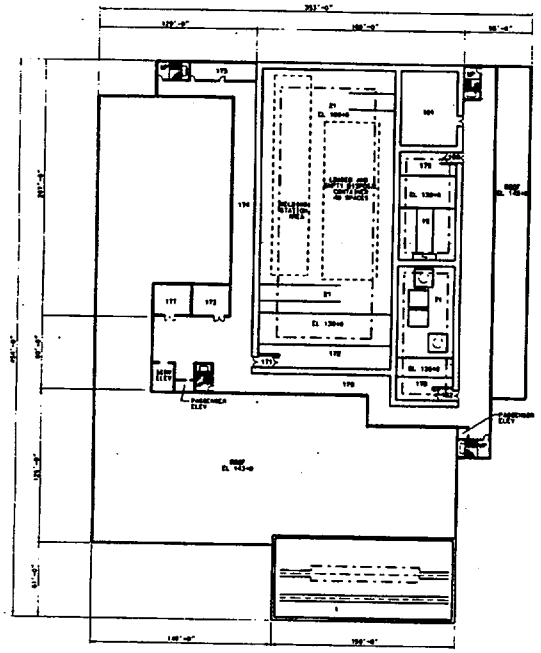

PLAN AT EL.100+0

WPC AND BARE SFA TRANSFER

1 CARRIER BAY
2 AIRLOCK 1
3 LOADED CASK PREP AREA
4 CORRIDOR
5 EQUIPMENT ROOM 3
6 AIRLOCK 2
7 DECON 1
8 AIRLOCK 3
9 CANISTERED WASTE CASK ROOM
10 BARE SFA CASK PORT ROOM
11 EQUIPMENT ROOM 4
12 BARE SFA DISPOSAL CONTAINER PORT ROOM
13 DECON 2
14 UNLOADED CASK PREP AREA
15 AIRLOCK 4
16 TOOL ROOM / CART REPAIR
17 EQUIPMENT ROOM 5
18 CORRIDOR
19 PERFORMANCE CONFIRMATION & FILLER CELL
20 DECON 3
21 DISPOSAL CONTAINER CELL
22 DECON 4
23 SUBSURFACE TRANSFER SAMPLE ROOM
24 SUBSURFACE TRANSFER ROOM
25 OPERATING GALLERY 1
26 TOOL STORAGE ROOM
27 VESTIBULE 2
28 OPERATING GALLERY 2
29 EQUIPMENT ROOM 6
30 EQUIPMENT DECON
31 LASER ROOM
32 JANITOR ROOM
33 EQUIPMENT STORAGE
34 TOOL STORAGE
35 AIRLOCK 5
36 OFFICE SPACE
37 VESTIBULE 1
38 WOMEN'S TOILET 1
39 MEN'S TOILET 1
40 LOBBY 1
41 CORRIDOR
42 PARTIAL W/ SECURITY 1
43 MEN'S CHANGE / SHOWER ROOM
44 WOMEN'S CHANGE / SHOWER ROOM
45 AIRLOCK 6
46 LOBBY 2
47 RADIOLOGICAL PROTECTION TECHNICIAN
48 JANITOR
49 JANITOR STORAGE
50 CORRIDOR
51 OFFICE SPACE
52 GREAT ROOM 1
53 CORRIDOR
54 CORRIDOR
55 VESTIBULE 3
56 AIRLOCK 7
57 PARTIAL W/ SECURITY 2
58 LOADING / UNLOADING DOCK
59 SHIP / RECEIVE OFFICE
60 OPEN STORAGE
61 OPEN STORAGE
62 EQUIPMENT ROOM 7
63 EQUIPMENT ROOM 8
64 DIESEL GENERATOR ROOM 1
65 DIESEL GENERATOR ROOM 2
66 AIRLOCK 8
67 AIRLOCK 9
68 AIRLOCK 10
69 AIRLOCK 11
70 MAINTENANCE SHOP

PLAN AT EL.116+0

WPC AND BARE SFA TRANSFER

1 OPS - CARRIER BAY
2 OPS - AIRLOCK 1
3 OPS - LOADED CASK PREP AREA
4 CORRIDOR
75 OPERATING GALLERY 3
90 MASTER SLAVE MANIPULATOR ARM REPAIR SHOP 1
7 OPS - DECON 1
8 OPS - AIRLOCK 2
9 OPS - CANISTERED WASTE CASK ROOM
10 OPS - BARE SFA CASK PORT ROOM
11 OPS - EQUIPMENT ROOM 4
12 OPS - BARE SFA DISPOSAL CONTAINER PORT ROOM
13 OPS - DECON 2
81 VESTIBULE 3
82 OPERATING GALLERY 4
83 CALIBRATION LAB (WARM INSTRUMENTS)
84 UNASSIGNED
85 EQUIPMENT ROOM 9
13 OPS - PERFORMANCE CONFIRMATION & FILLER CELL
26 OPS - DECON 3
21 OPS - DISPOSAL CONTAINER CELL
86 UNASSIGNED
87 OFFICE SPACE
88 WOMEN'S TOILET 2
89 MEN'S TOILET 2
90 WCM CONTROL ROOM
91 LOBBY 3
92 JANITOR
93 JANITOR SUPPLY
94 OFFICE SPACE - MANAGERIAL, ENG., QA, WPC
95 OFFICE SPACE AND REFERENCE ROOMS
96 GREAT ROOM 2
97 REPRODUCTIONS AND DOCUMENT CONTROL
98 UNASSIGNED
99 OPERATING GALLERY 5
100 COPY ROOM
101 OFFICE SUPPLY
102 FIRST AID 1
103 OFFICE SPACE
104 OFFICE SPACE
105 OFFICE SPACE
106 LAB 1
107 OFFICE SPACE
108 ROENTGENT LAB
109 LAB 2
110 OFFICE SPACE
111 CALIBRATION LAB
112 SPARE PARTS
113 JANITOR STORAGE
114 AIRLOCK 12
115 CORRIDOR
116 AIRLOCK 13
117 GENERAL MAINTENANCE MEZZANINE
118 OPERATING GALLERY 6

PLAN AT EL.130+0

WPC AND BARE SFA TRANSFER

1 OPS - CARRIER BAY
71 BARE SFA TRANSFER CELL
125 MECHANICAL / HVAC ROOM 1
126 AIRLOCK 14
127 CORRIDOR
128 MASTER SLAVE MANIPULATOR ARM REPAIR SHOP 2
129 HOT SUPPORT SUPPLIES
130 OPERATING GALLERY 7
131 AIRLOCK 15
132 EQUIPMENT ROOM 1
133 EQUIPMENT ROOM 2
134 SPARE PARTS
135 AIRLOCK 16
136 HVAC MAINTENANCE REPAIR 1
137 PERFORMANCE CONFIRMATION MAINT BAY
138 BARE SFA MAINT BAY
139 MECHANICAL / HVAC ROOM 2
140 EQUIPMENT ACCESS AISLE
141 AIRLOCK 17
142 DISPOSAL CONTAINER CELL MAINT BAY
143 SHIT-UP & PERSONNEL DECON 1
144 HEALTH PHYSICS 1
145 UNASSIGNED
146 TRAINING ROOM
147 CORRIDOR
148 DEVELOPMENTAL MOCK-UP SHOP
149 WELDER CERTIFICATION LAB
150 JANITOR SUPPLY
151 CORRIDOR
152 OFFICE SUPPLY
153 FIRST AID 2
154 OFFICE SPACE
155 OFFICE SPACE
156 ANALYTICAL LAB
157 LONG TERM SAFETY
158 LAB 3
159 SPARE PARTS 2
160 TOOL ISSUE
161 UNASSIGNED
162 UNASSIGNED
163 AIRLOCK 17A
164 OPERATING GALLERY 8

PLAN AT EL.143+0

WPC AND BARE SFA TRANSFER

1 OPS - CARRIER BAY
170 OPERATING GALLERY 9
171 AIRLOCK 18
172 DISPOSAL CONTAINER CELL MAINT BAY MEZZANINE
173 SHIT-UP & PERSONNEL DECON 2
174 CORRIDOR
175 STORAGE
177 HEALTH PHYSICS 2
79 OPS - PERFORMANCE CONFIRMATION & FILLER CELL
174 BARE SFA MEZZANINE MAINT BAY
71 OPS - BARE SFA TRANSFER CELL
21 OPS - DISPOSAL CONTAINER CELL
179 PERFORMANCE CONFIRMATION MAINT BAY MEZZANINE
180 AIRLOCK 19
181 HVAC MAINTENANCE REPAIR 2
182 AIRLOCK 20

PLAN AT EL.160+0

WPC AND BARE SFA TRANSFER

182 FILTER STORAGE ROOM
183 MECHANICAL / HVAC ROOM 3

LEGEND

E EMERGENCY EXIT
S SHIPPING / RECEIVING
P PERSONNEL ENTRY / EXIT
OPS OPEN TO BELOW
SFA SPENT NUCLEAR FUEL
MPC MULTI-PURPOSE CANISTER

WASTE HANDLING BUILDING FLOOR PLAN AT EL.143+0

GRAPHIC SCALE

WASTE HANDLING BUILDING GENERAL ARRANGEMENT FLOOR PLAN AT EL 143+0

WHA-SK-100D

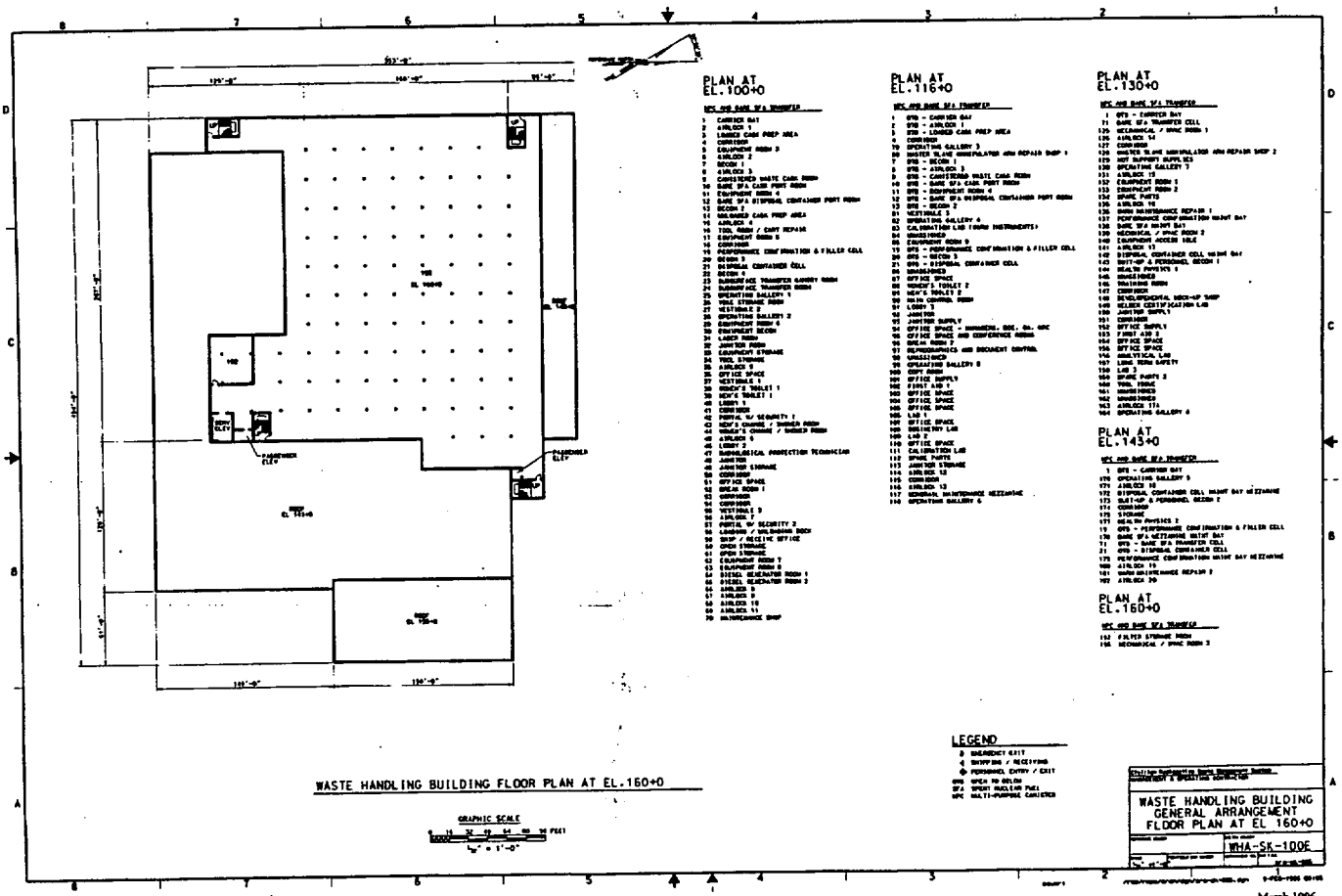
PLAN AT EL.100+0
PLAN AT EL.116+0
PLAN AT EL.130+0
PLAN AT EL.145+0
PLAN AT EL.160+0
LEGEND
WASTE HANDLING BUILDING FLOOR PLAN AT EL.160+0
GRAPHIC SCALE
WASTE HANDLING BUILDING GENERAL ARRANGEMENT FLOOR PLAN AT EL 160+0
WHA-SK-100E

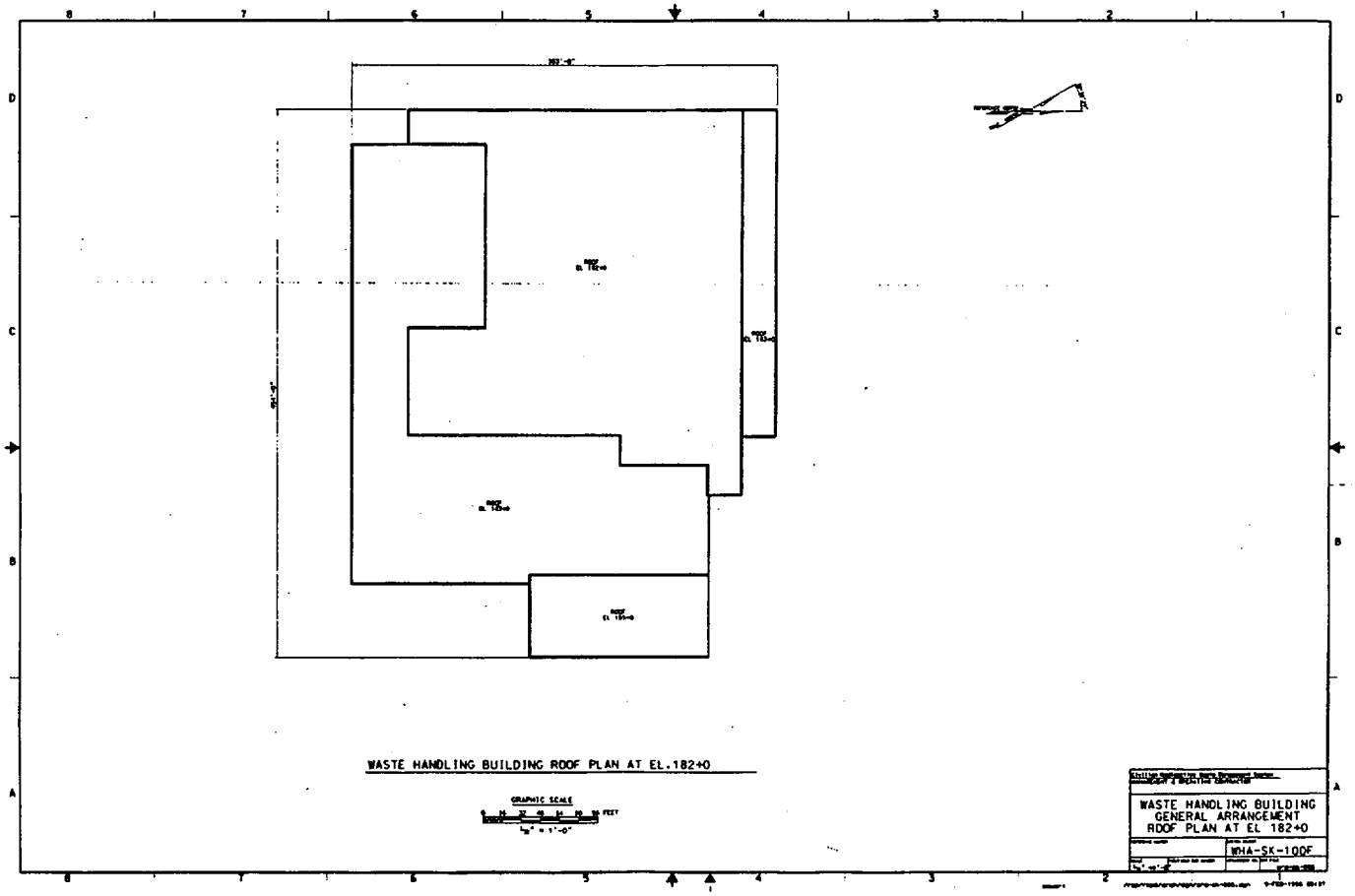
WASTE HANDLING BUILDING ROOF PLAN AT EL.182+0
GRAPHIC SCALE
WASTE HANDLING BUILDING
GENERAL ARRANGEMENT
ROOF PLAN AT EL 182+0
WHA-SK-100F

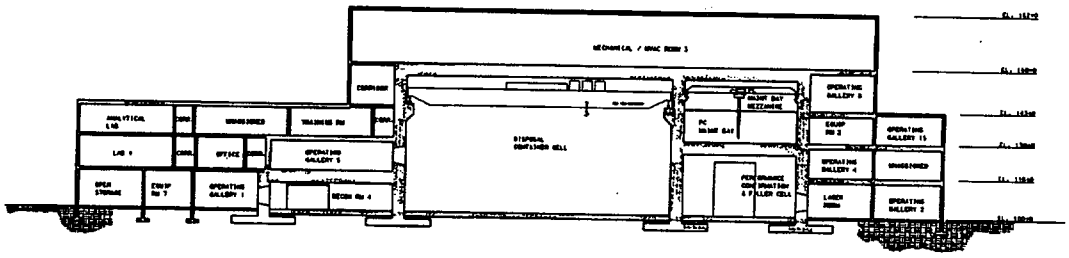

WASTE HANDLING BUILDING SECTION A-A
THRU DC CASK DECON 4, DISPOSAL CONTAINER CELL AND BARE SFA TRANSFER CELL

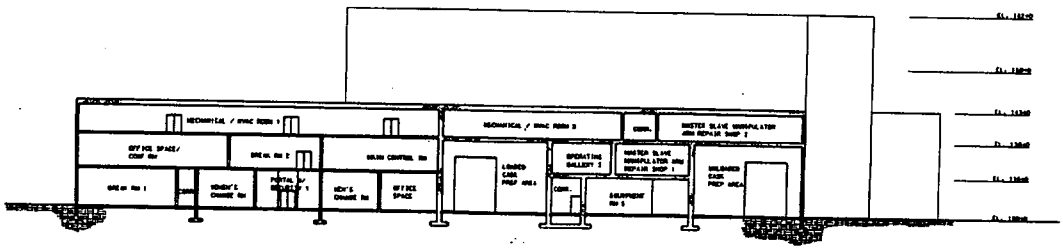

WASTE HANDLING BUILDING SECTION B-B
THRU SUPPORT FACILITY, CASK PREP AREA & OPERATING GALLERY

WASTE HANDLING BUILDING
GENERAL ARRANGEMENT
BUILDING SECTIONS

WHA-SK-100G

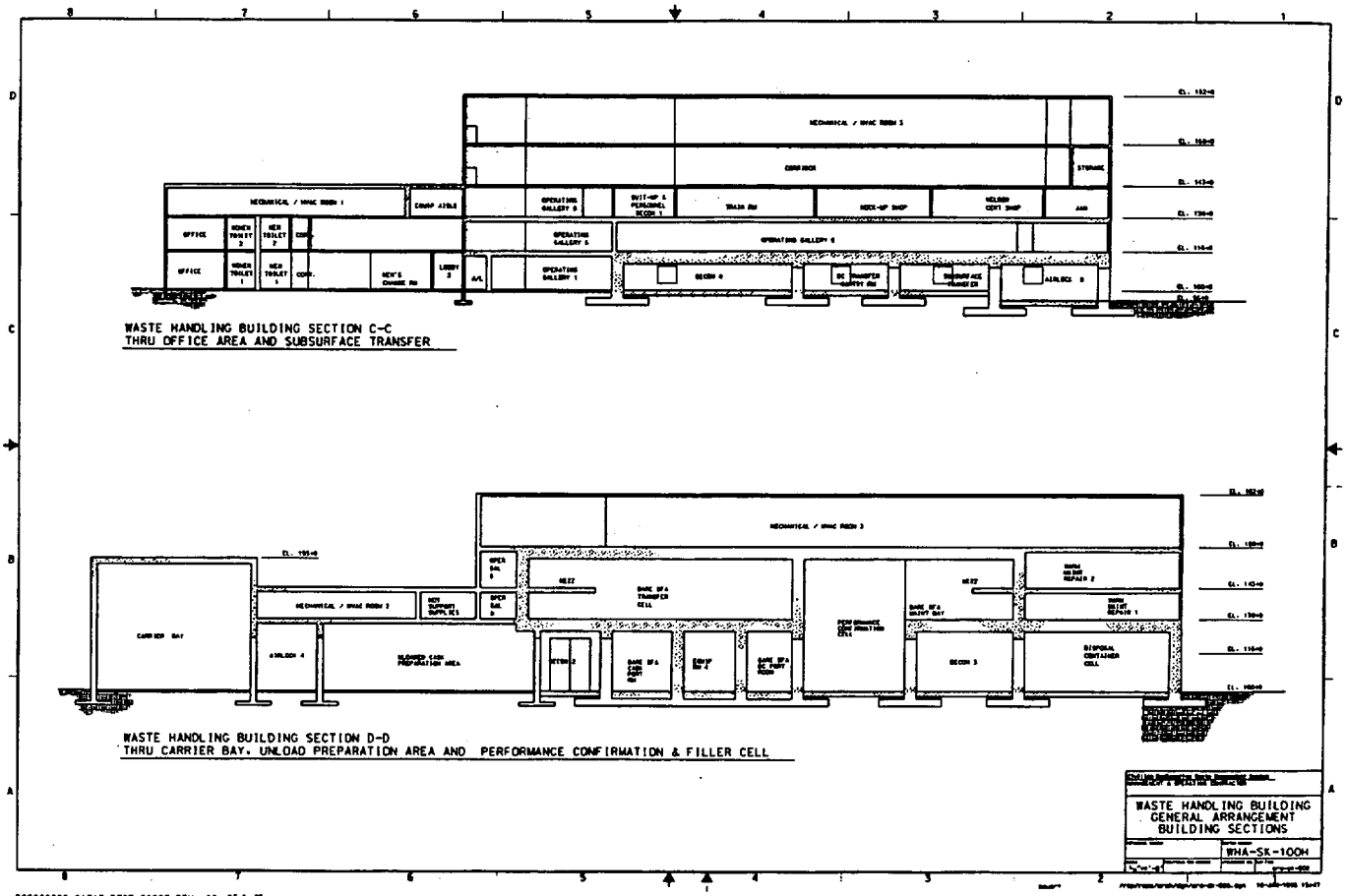
WASTE HANDLING BUILDING SECTION C-C
THRU OFFICE AREA AND SUBSURFACE TRANSFER
WASTE HANDLING BUILDING SECTION D-D
THRU CARRIER BAY, UNLOAD PREPARATION AREA AND PERFORMANCE CONFIRMATION & FILLER CELL
WASTE HANDLING BUILDING
GENERAL ARRANGEMENT
BUILDING SECTIONS
WHA-SK-100H

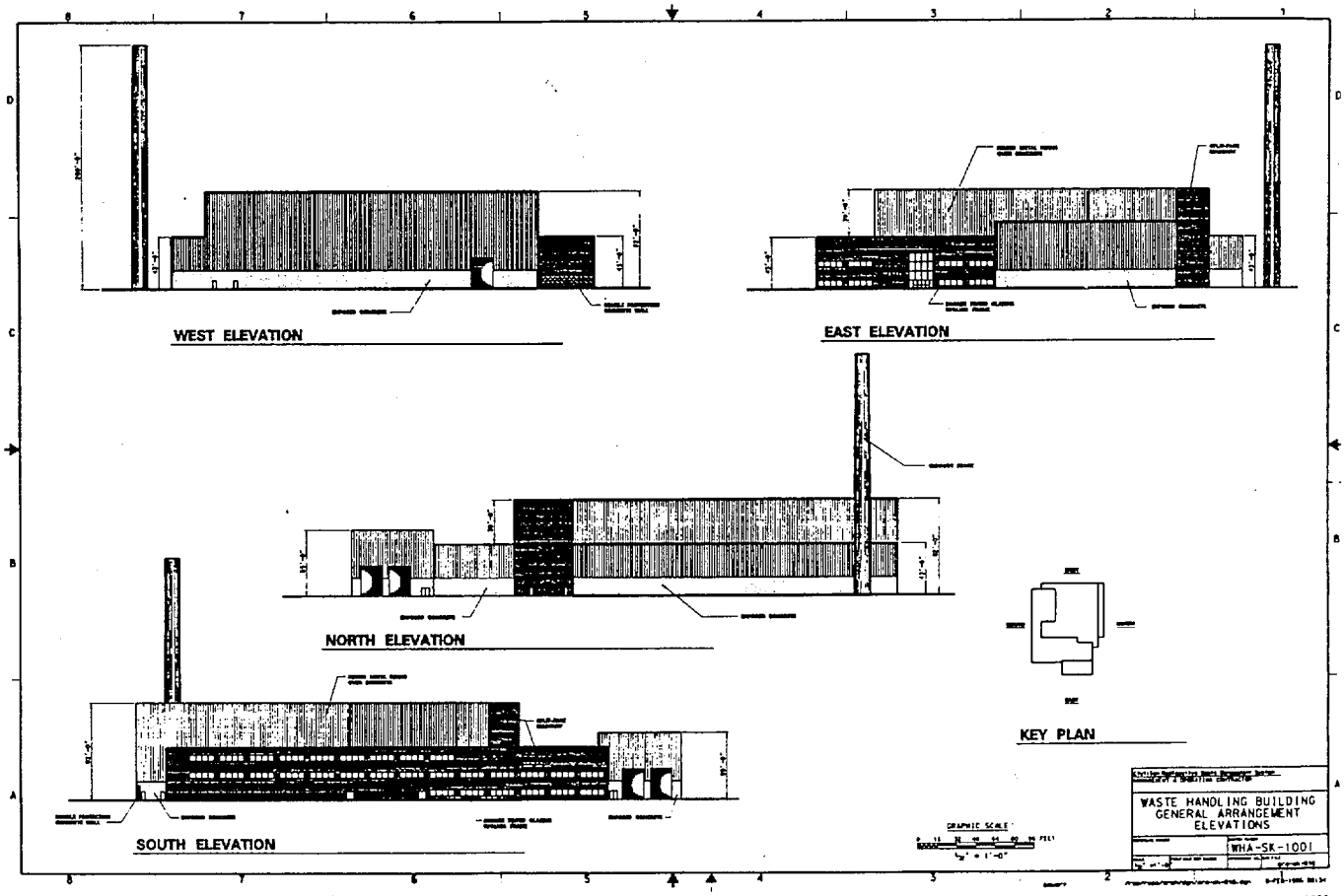
WEST ELEVATION
EAST ELEVATION
NORTH ELEVATION
SOUTH ELEVATION
KEY PLAN
GRAPHIC SCALE
WASTE HANDLING BUILDING
GENERAL ARRANGEMENT
ELEVATIONS
WHA-SK-1001

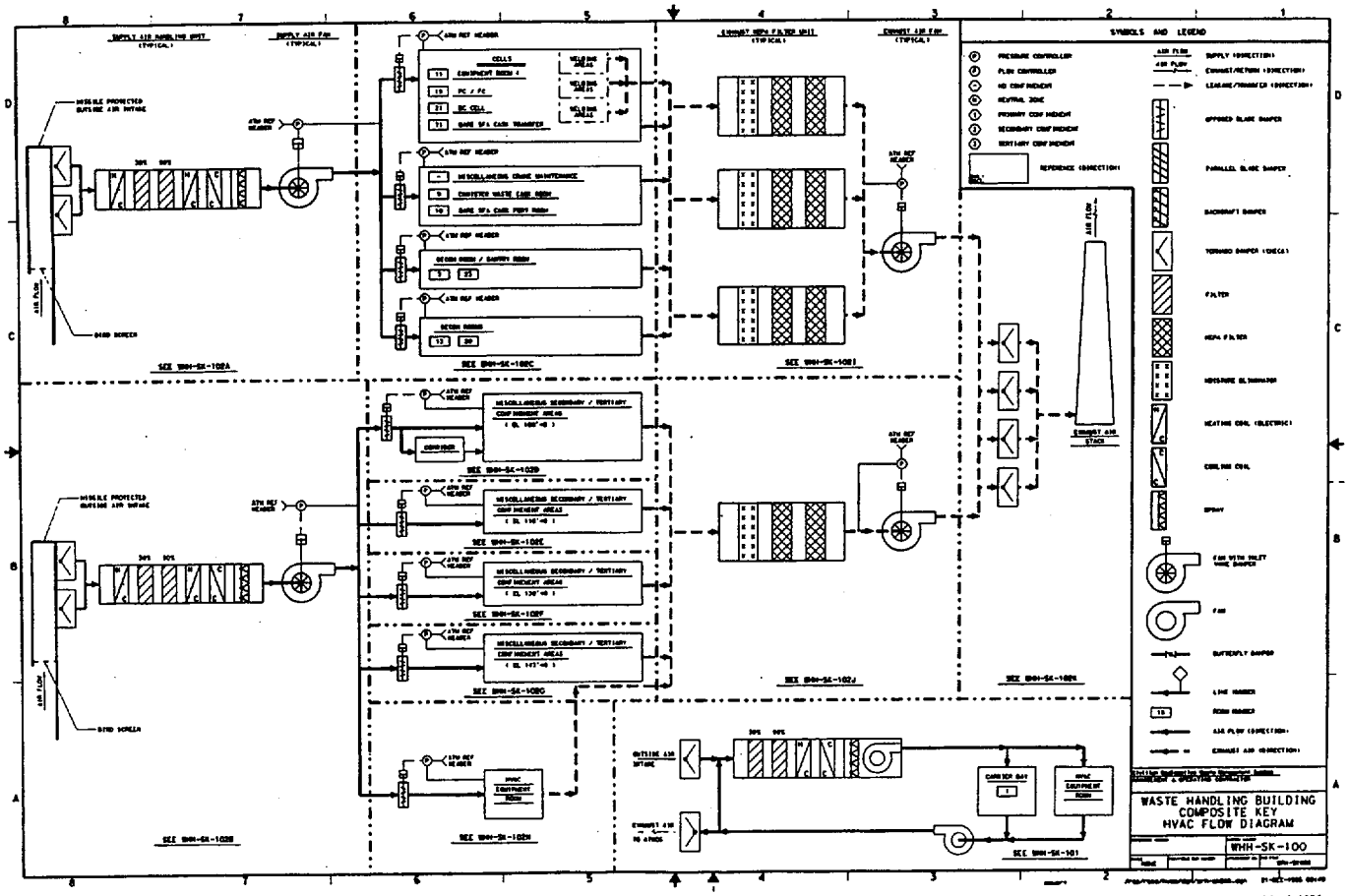
SYMBOLS AND LEGEND
WASTE HANDLING BUILDING
COMPOSITE KEY
HVAC FLOW DIAGRAM
WHH-SK-100

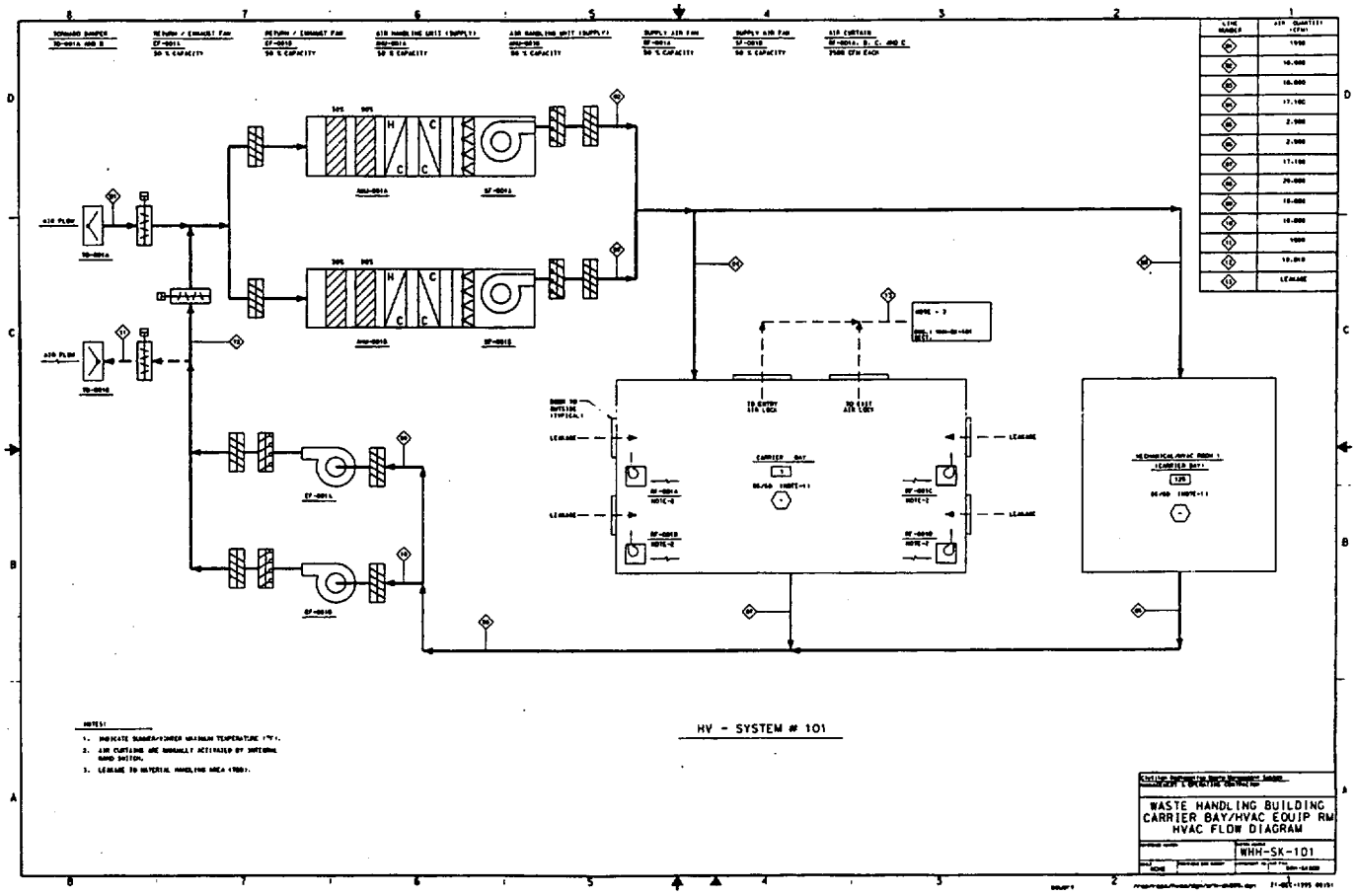
HV - SYSTEM # 101
WASTE HANDLING BUILDING
CARRIER BAY/HVAC EQUIP RM
HVAC FLOW DIAGRAM
WHH-SK-101

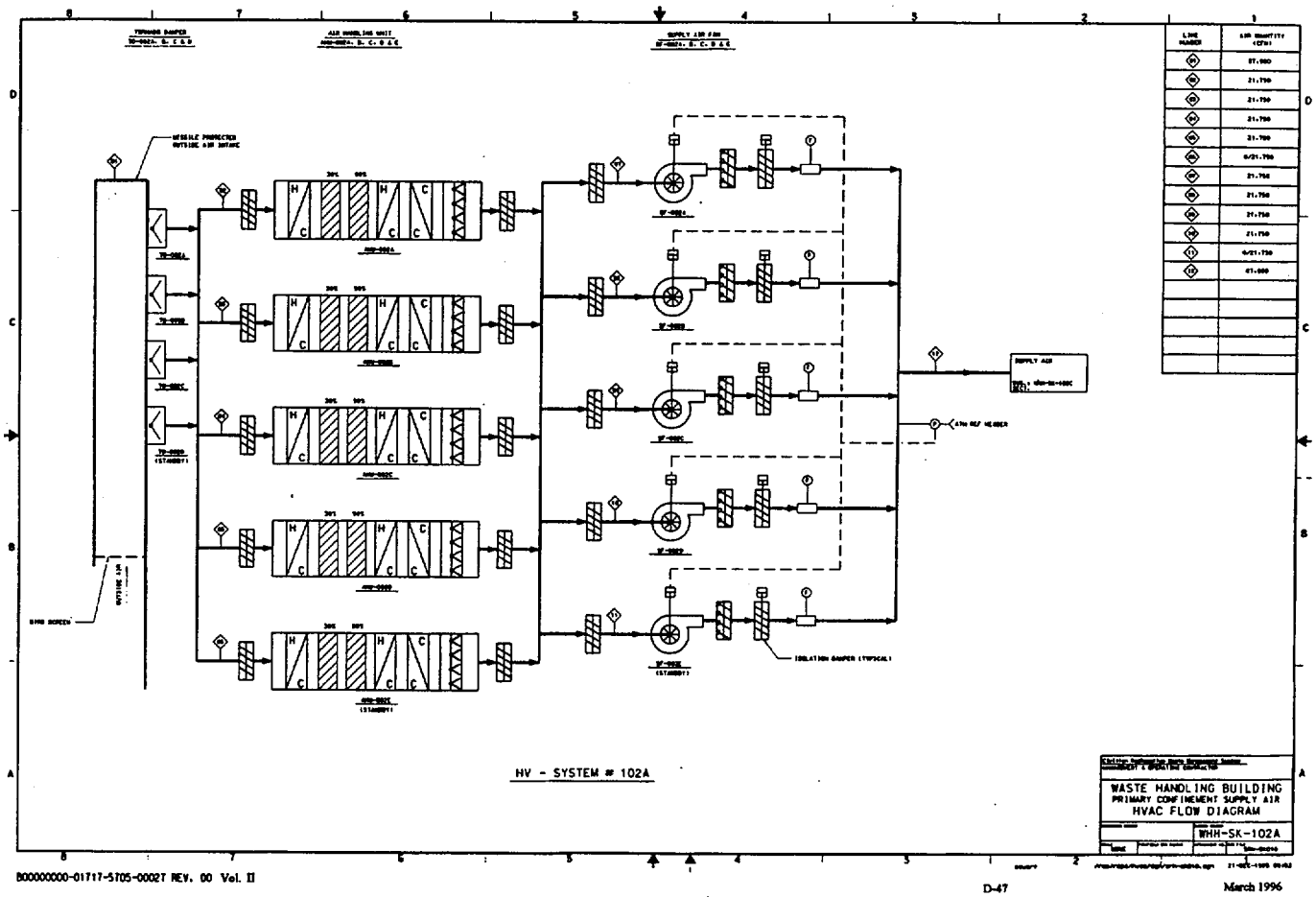
HV - SYSTEM # 102A
WASTE HANDLING BUILDING
PRIMARY CONFINEMENT SUPPLY AIR
HVAC FLOW DIAGRAM
WHH-SK-102A
SUPPLY AIR
ISOLATION DAMPER (TYPICAL)

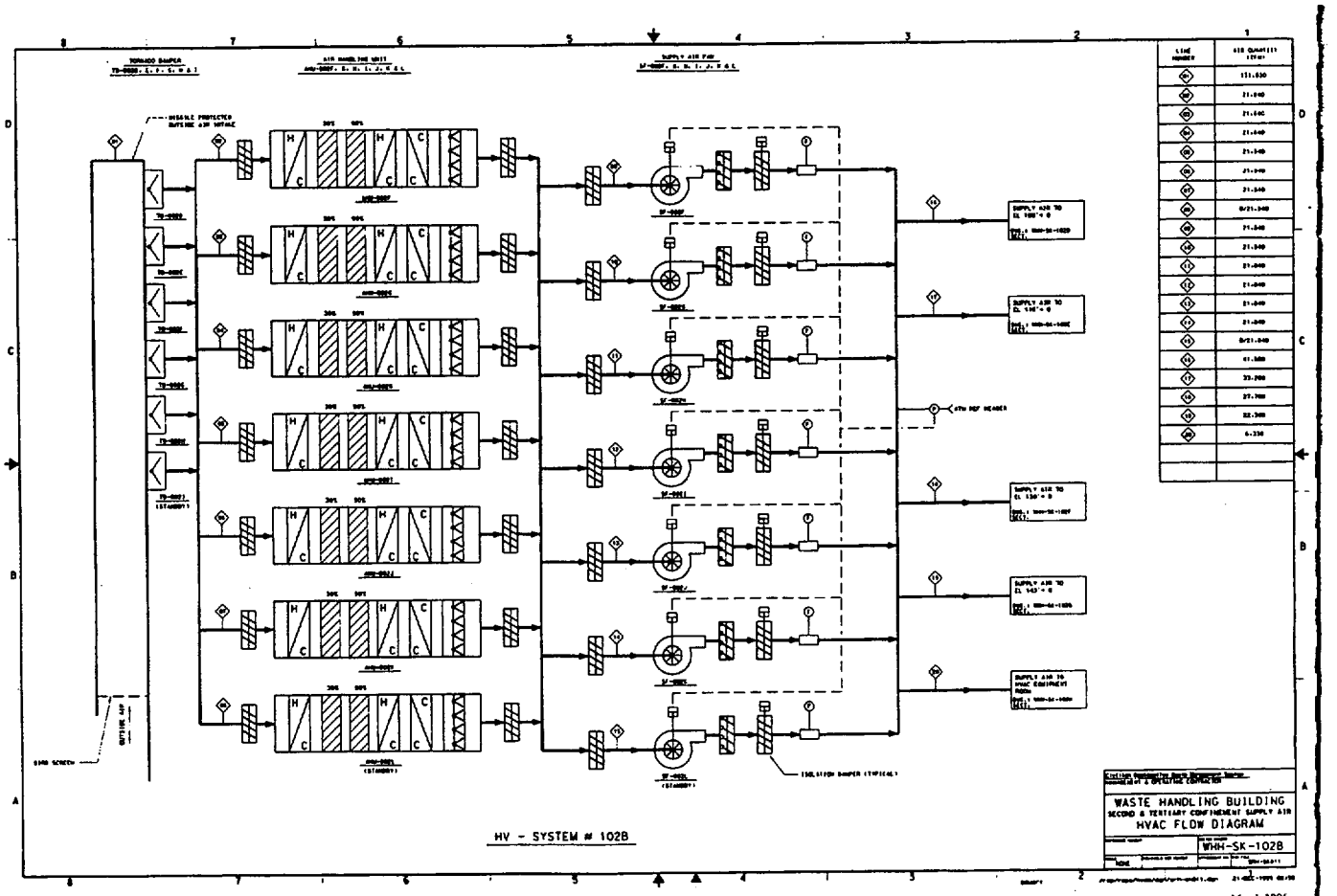
WASTE HANDLING BUILDING
SECOND & TERTIARY CONFINEMENT SUPPLY AIR
HVAC FLOW DIAGRAM
WHH-SK-102B
HV - SYSTEM # 102B

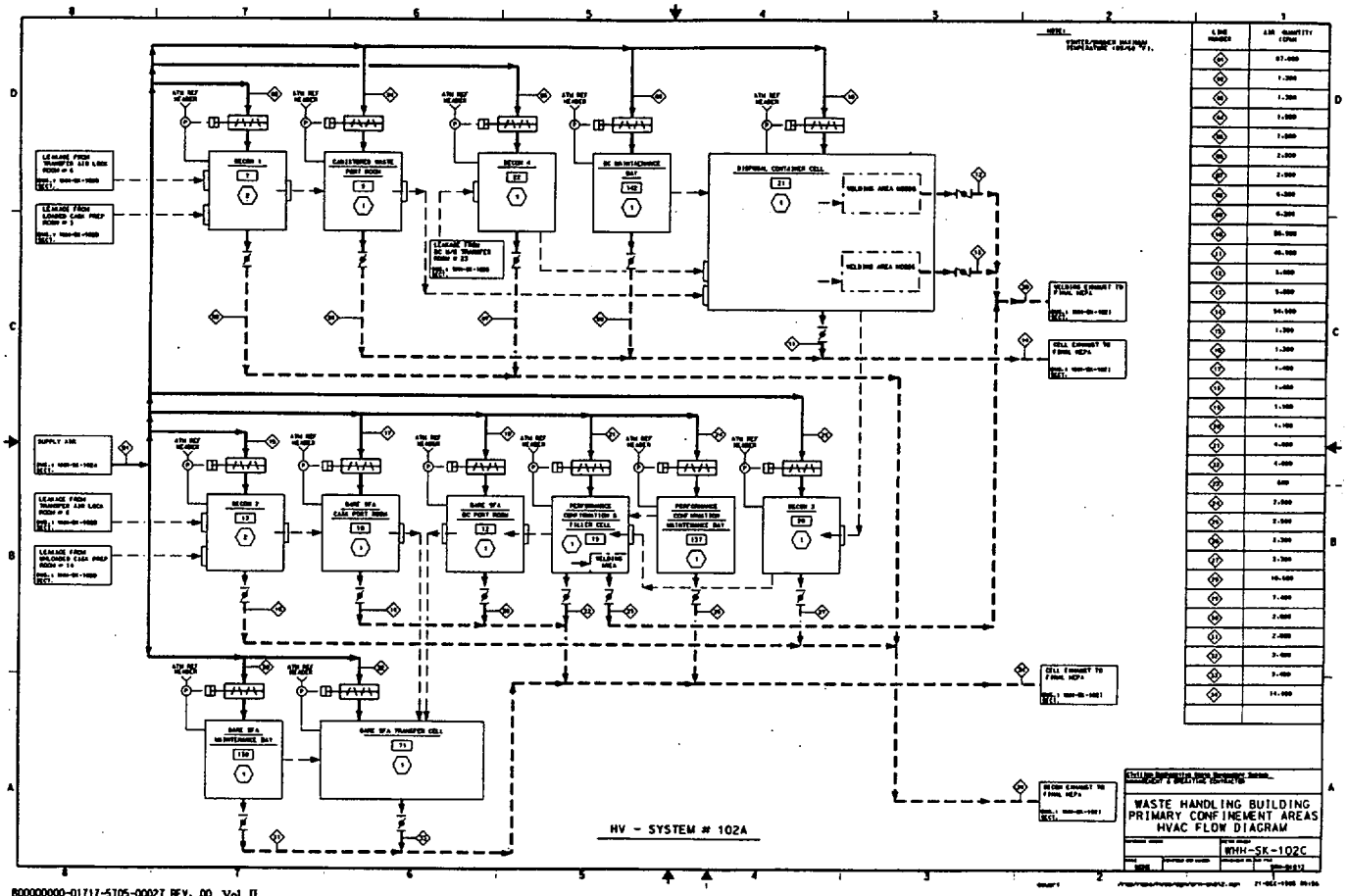
WASTE HANDLING BUILDING
PRIMARY CONFINEMENT AREAS
HVAC FLOW DIAGRAM
WHH-SK-102C
HV - SYSTEM # 102A

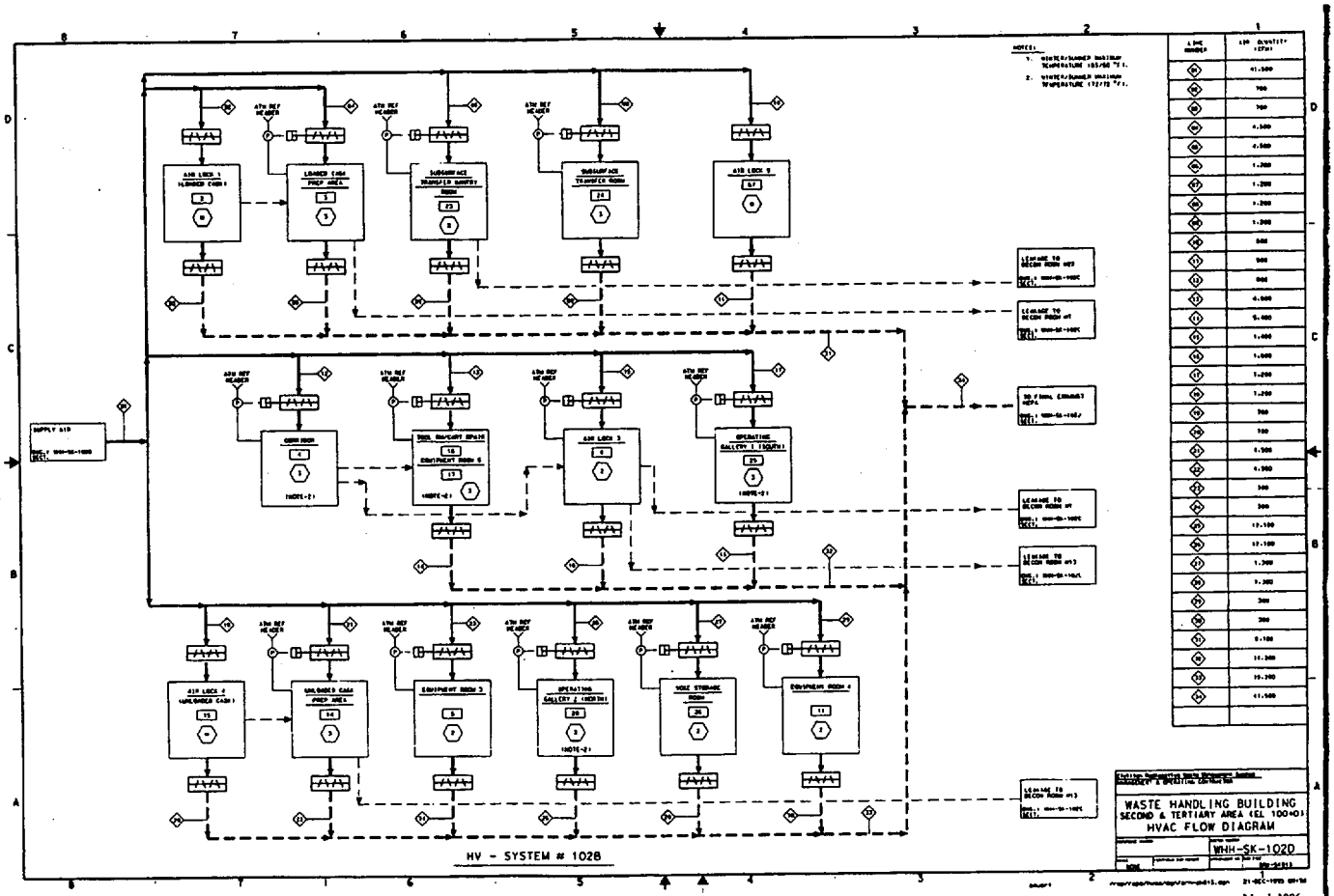
WASTE HANDLING BUILDING
SECOND & TERTIARY AREA (EL 100+0)
HVAC FLOW DIAGRAM
WHH-SK-1020
HV - SYSTEM # 1028

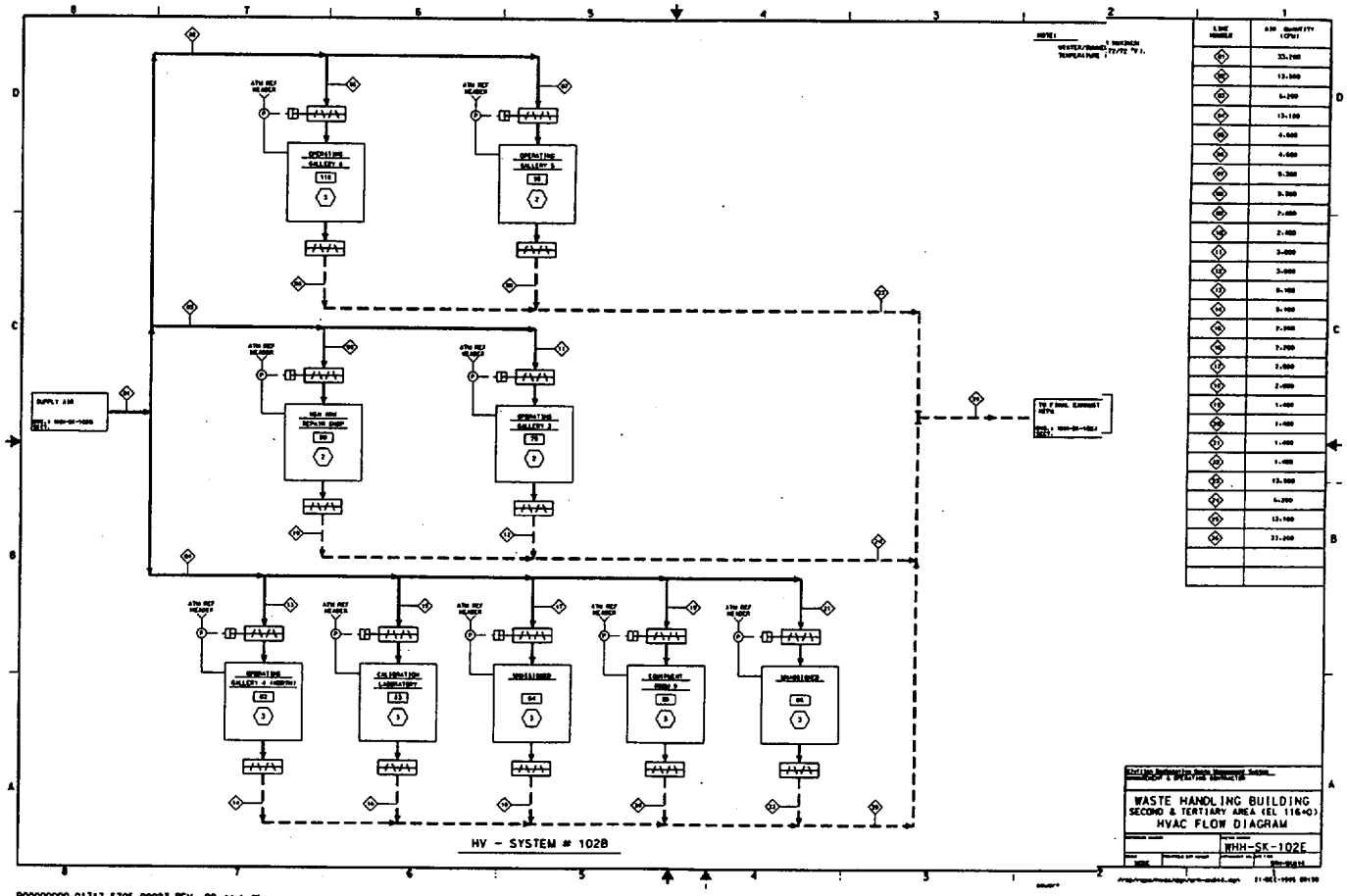
HV - SYSTEM # 102B
WASTE HANDLING BUILDING
SECOND & TERTIARY AREA (EL 116+0)
HVAC FLOW DIAGRAM
WHH-SK-102E

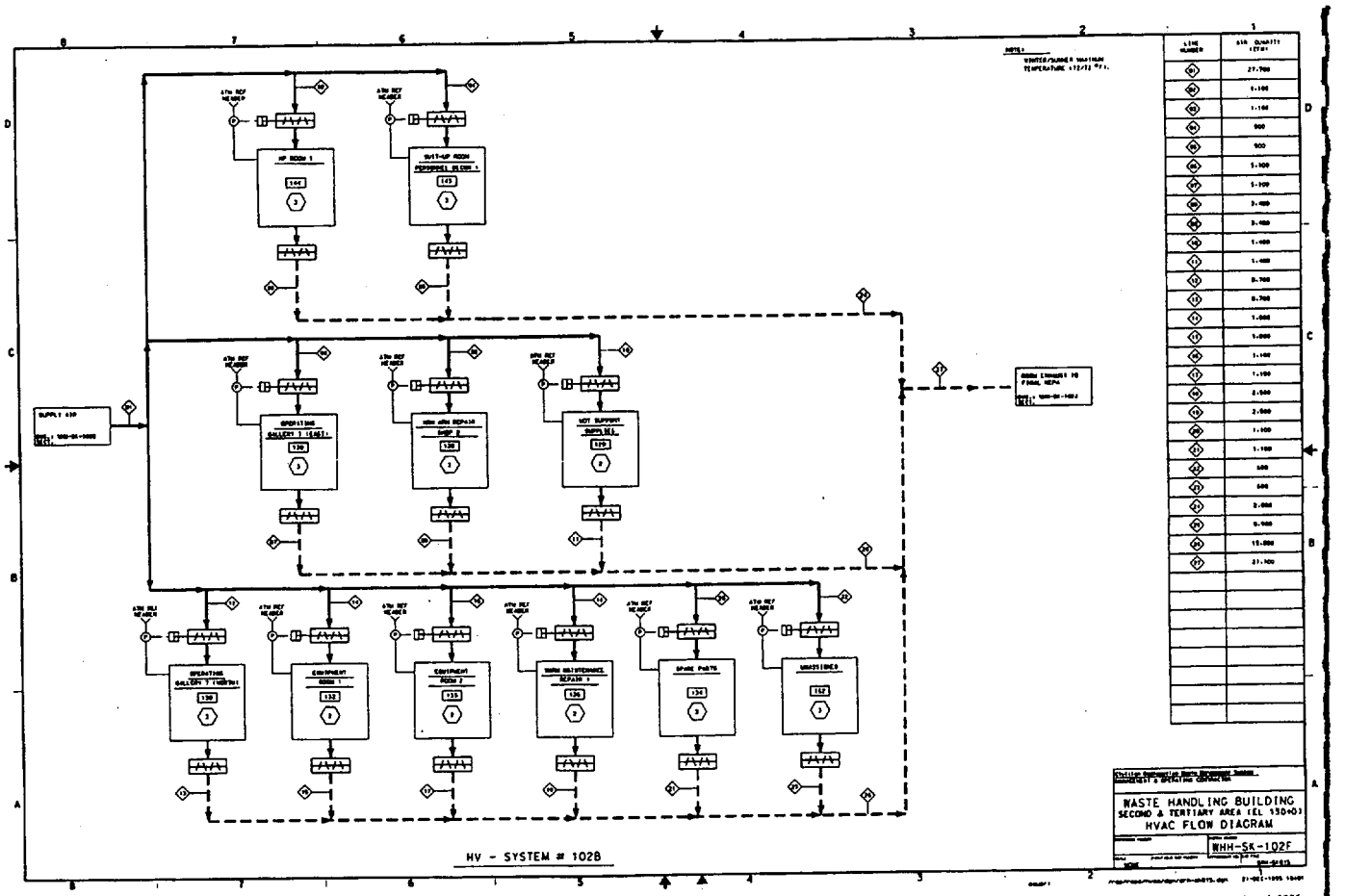
WASTE HANDLING BUILDING
SECOND & TERTIARY AREA (EL 130+03)
HVAC FLOW DIAGRAM
WHH-SK-102F
HV - SYSTEM # 102B

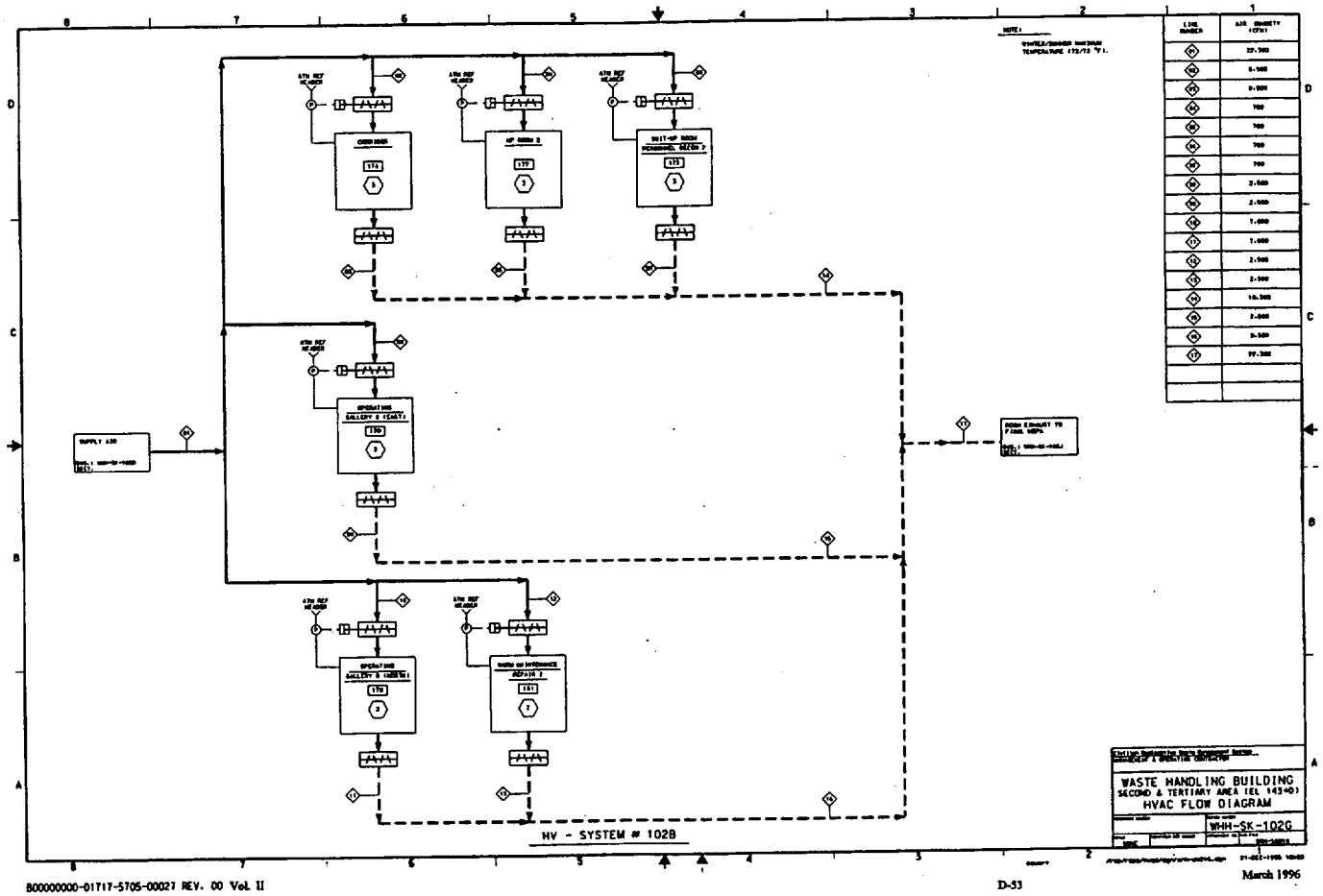
WASTE HANDLING BUILDING
SECOND & TERTIARY AREA (EL 143+0)
HVAC FLOW DIAGRAM
WHH-SK-102G
HV - SYSTEM # 102B

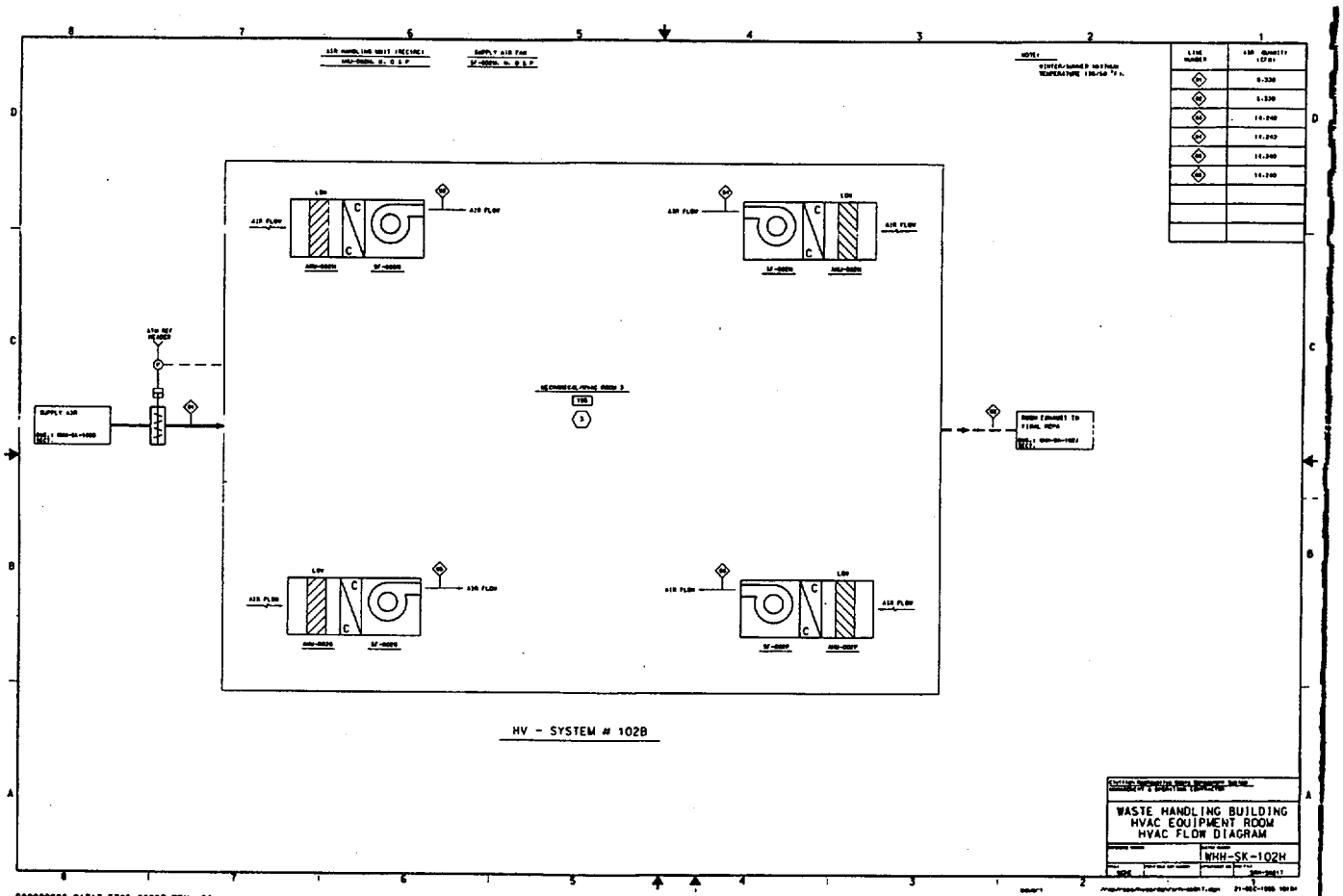
HV - SYSTEM # 102B
WASTE HANDLING BUILDING
HVAC EQUIPMENT ROOM
HVAC FLOW DIAGRAM
WHH-SK-102H

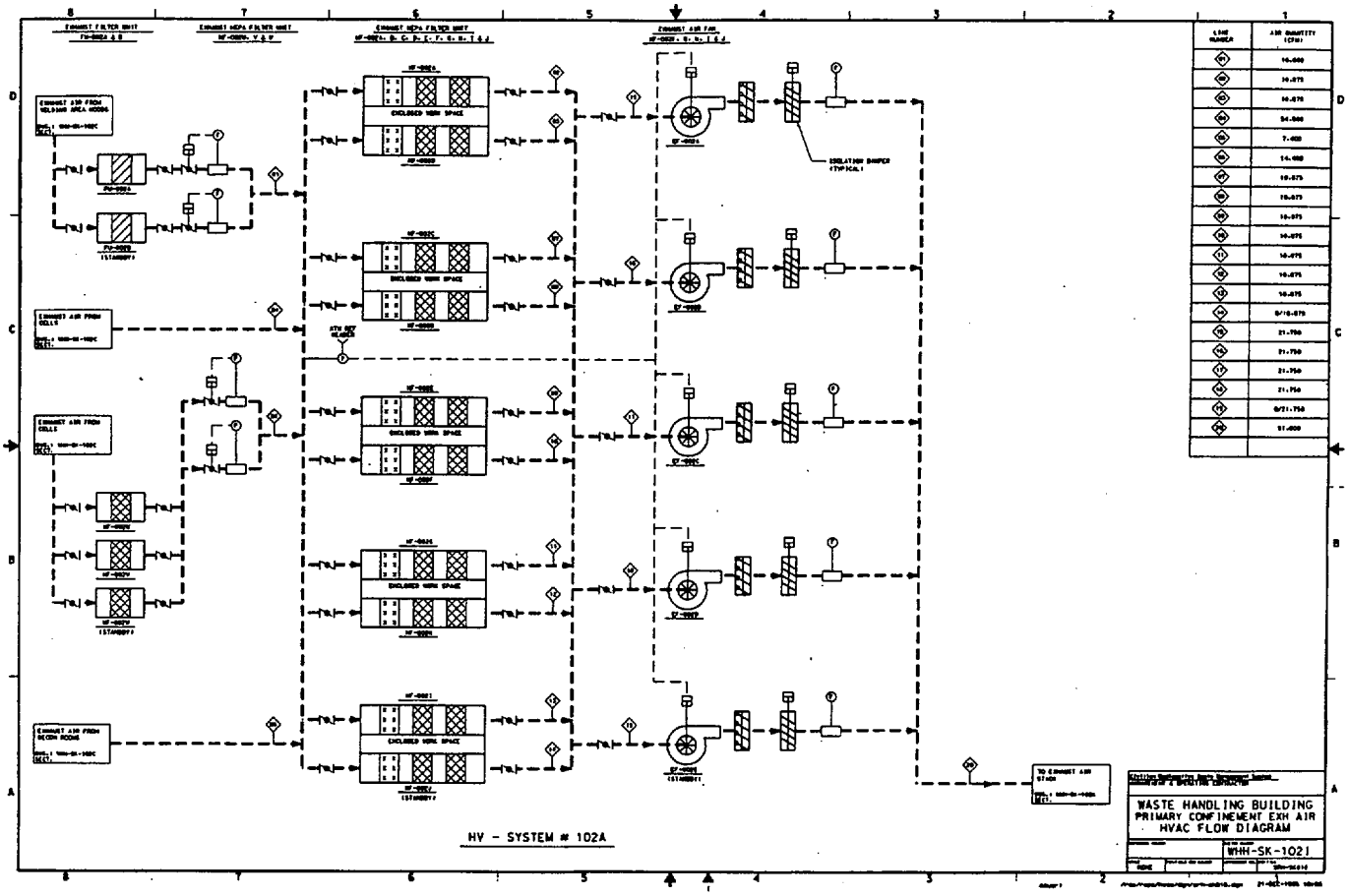
HV - SYSTEM # 102A
WASTE HANDLING BUILDING
PRIMARY CONFINEMENT EXH AIR
HVAC FLOW DIAGRAM
WHH-SK-1021
ISOLATION DAMPER (TYPICAL)
ENCLOSED WORK SPACE

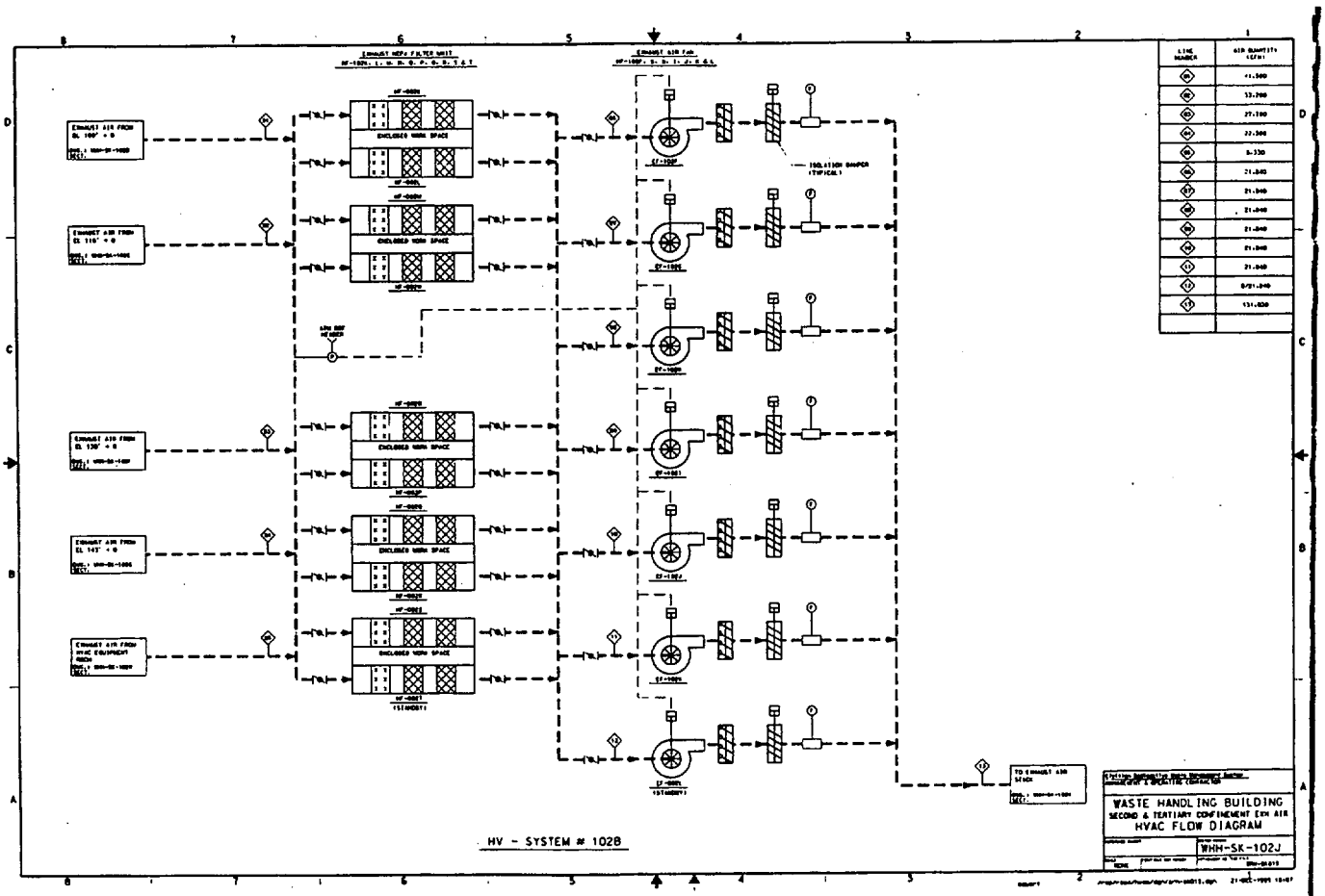
WASTE HANDLING BUILDING
SECOND & TERTIARY CONFINEMENT EXH AIR
HVAC FLOW DIAGRAM
WHH-SK-102J
HV - SYSTEM # 1028
ENCLOSED WORK SPACE
ISOLATION DAMPER (TYPICAL)
TO EXHAUST AIR STACK

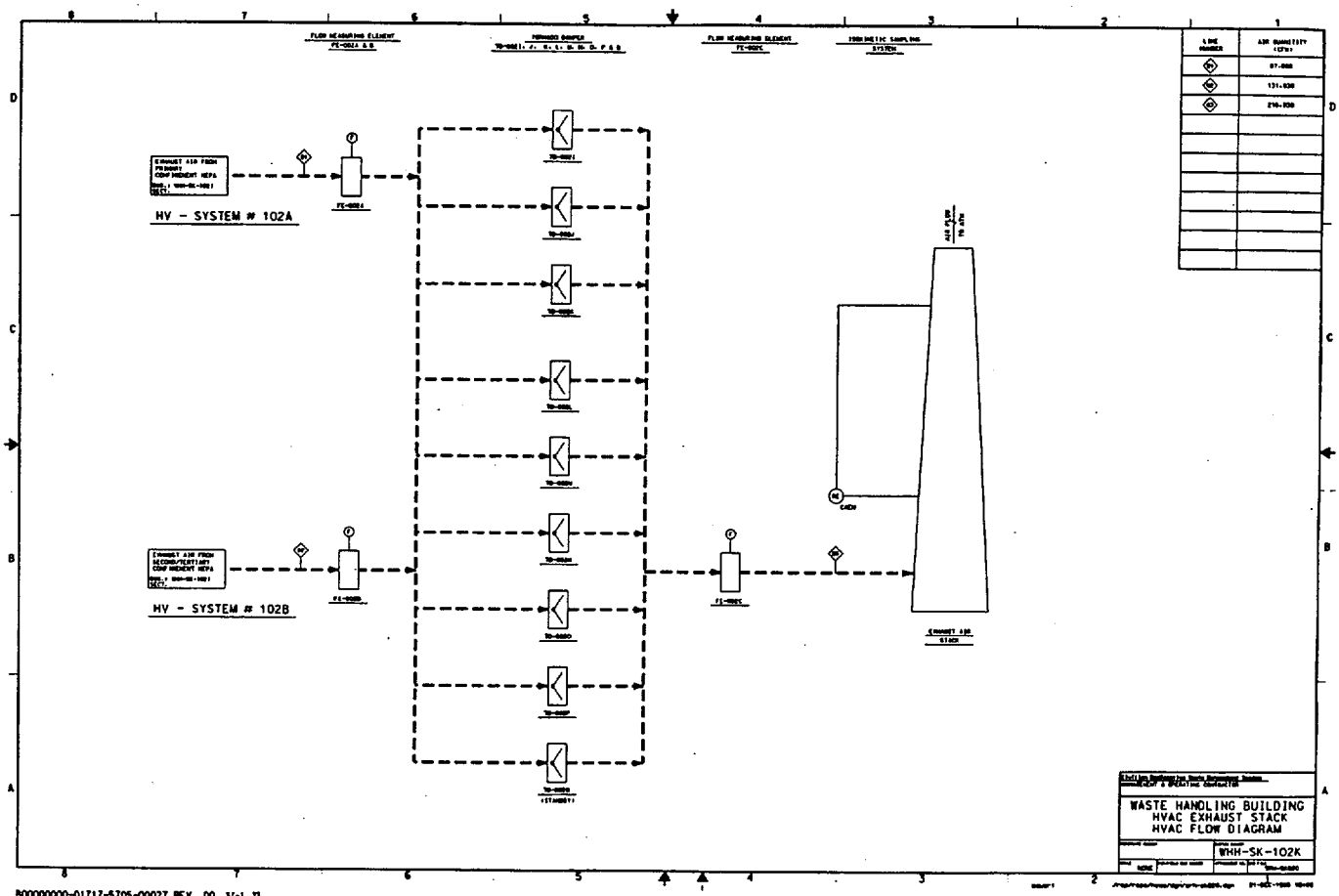
HV - SYSTEM # 102A
HV - SYSTEM # 102B
WASTE HANDLING BUILDING
HVAC EXHAUST STACK
HVAC FLOW DIAGRAM
WHH-SK-102K

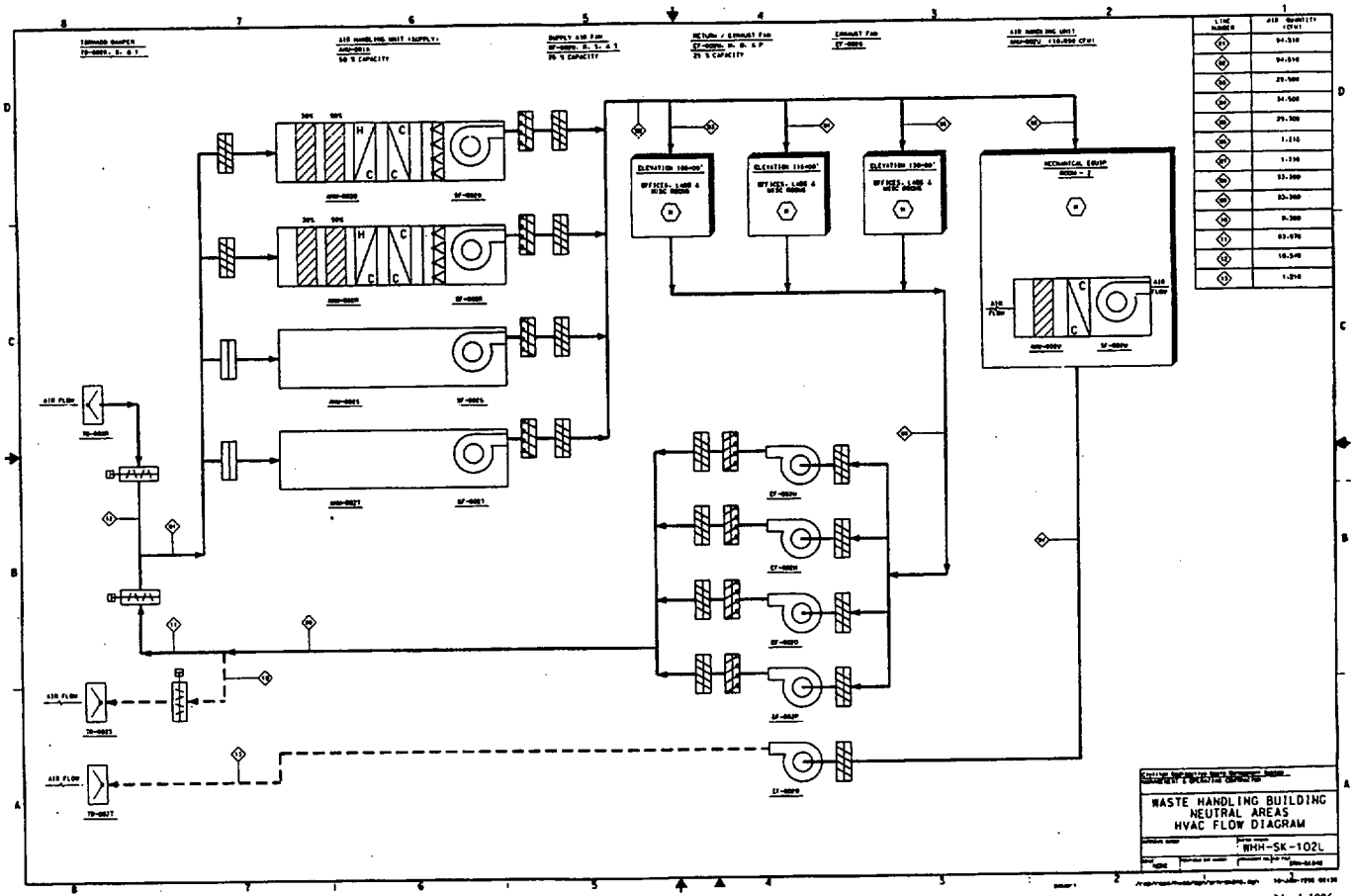
WASTE HANDLING BUILDING
NEUTRAL AREAS
HVAC FLOW DIAGRAM
WHH-SK-102L

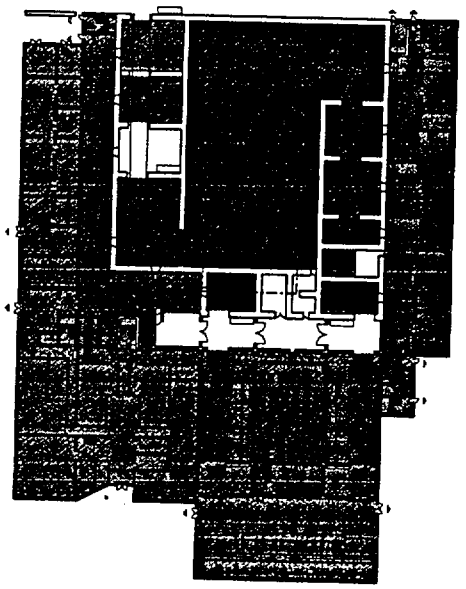

WASTE HANDLING BUILDING FLOOR PLAN AT EL.100+0

CONFINEMENT ZONES

PRIMARY

SECONDARY

TERTIARY

NON-CONFINEMENT AREA

NEUTRAL

GRAPHIC SCALE

WASTE HANDLING BUILDING
HVAC CONFINEMENT ZONES
PLAN AT EL 100+0

WHH-SK-103A

INTENTIONALLY LEFT BLANK

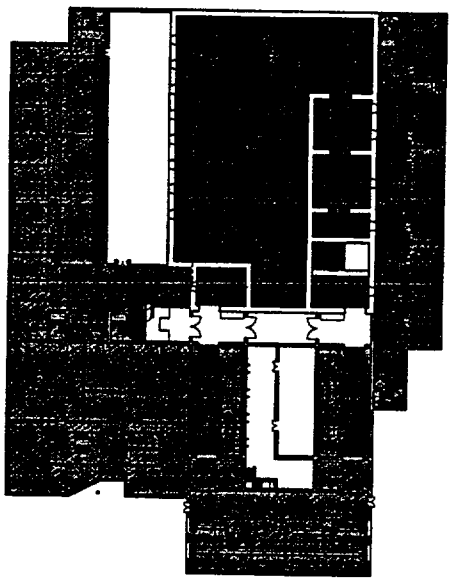

WASTE HANDLING BUILDING FLOOR PLAN AT EL.116+0

CONFINEMENT ZONES

PRIMARY

SECONDARY

TERTIARY

NON-CONFINEMENT AREA

NEUTRAL

GRAPHIC SCALE

WASTE HANDLING BUILDING
HVAC CONFINEMENT ZONES
PLAN AT EL 116+0

WHH-SK-1038

INTENTIONALLY LEFT BLANK

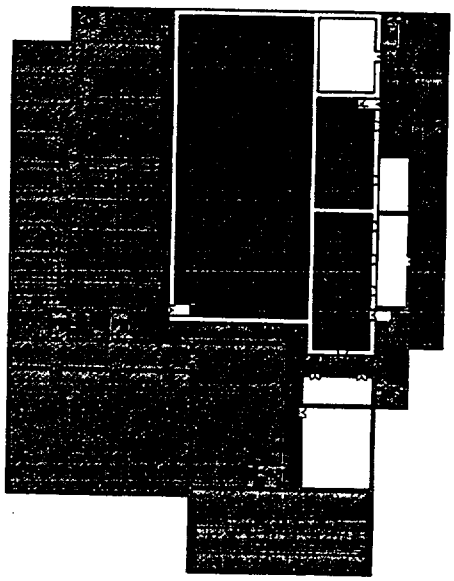

WASTE HANDLING BUILDING FLOOR PLAN AT EL.130+0

CONFINEMENT ZONES

PRIMARY

SECONDARY

TERTIARY

NON-CONFINEMENT AREA

NEUTRAL

GRAPHIC SCALE

WASTE HANDLING BUILDING
HVAC CONFINEMENT ZONES
PLAN AT EL 130+0

WHH-SK-103C

INTENTIONALLY LEFT BLANK

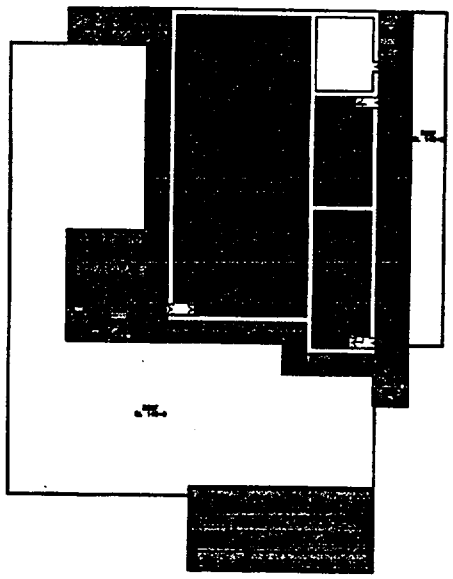

WASTE HANDLING BUILDING FLOOR PLAN AT EL.143+0

CONFINEMENT ZONES

PRIMARY

SECONDARY

TERTIARY

NON-CONFINEMENT AREA

NEUTRAL

GRAPHIC SCALE

WASTE HANDLING BUILDING
HVAC CONFINEMENT ZONES
PLAN AT EL 143+0

WHH-SK-1030

INTENTIONALLY LEFT BLANK

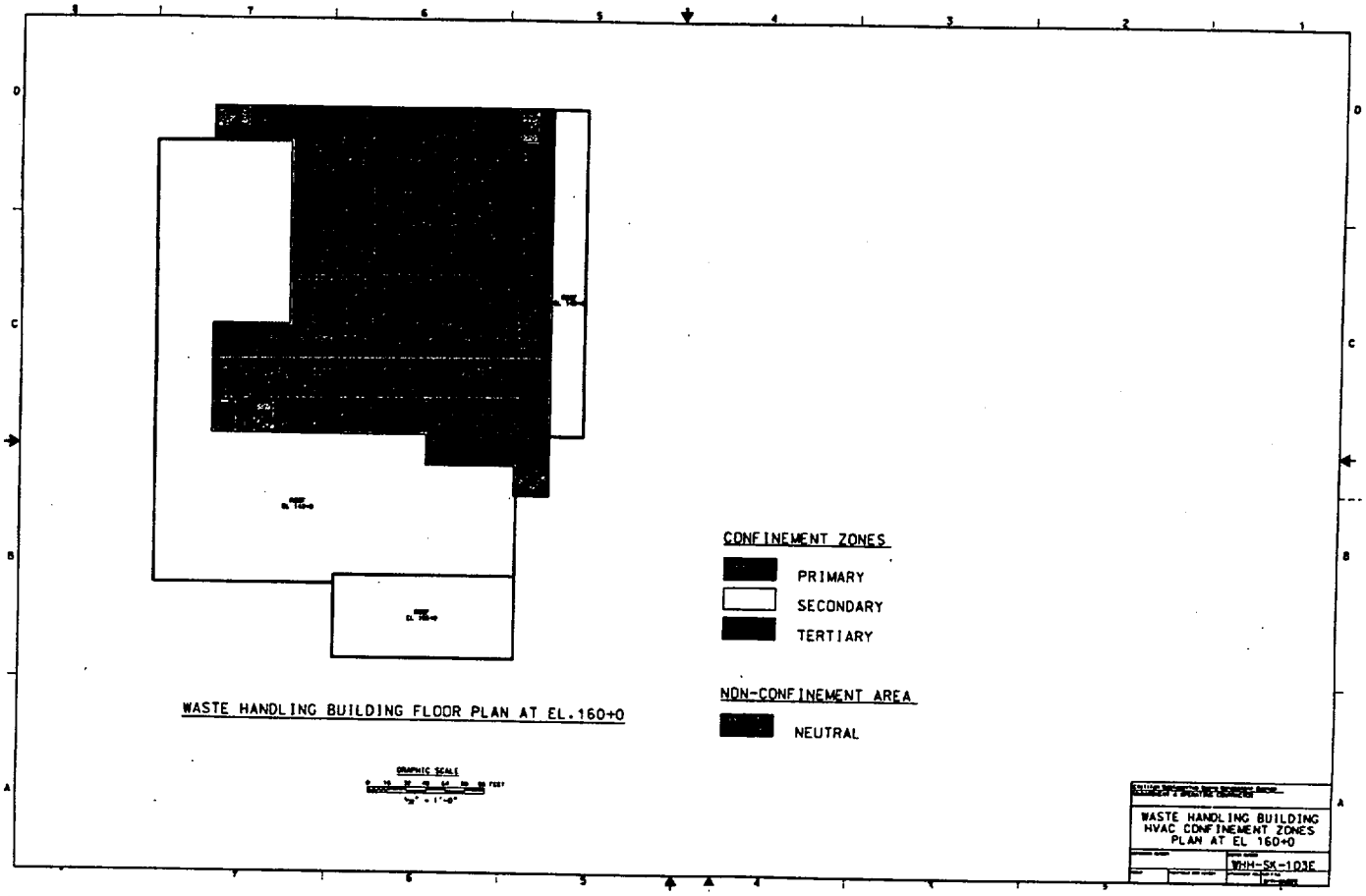
CONFINEMENT ZONES
PRIMARY
SECONDARY
TERTIARY
NON-CONFINEMENT AREA
NEUTRAL
WASTE HANDLING BUILDING FLOOR PLAN AT EL.160+0
GRAPHIC SCALE
WASTE HANDLING BUILDING
HVAC CONFINEMENT ZONES
PLAN AT EL 160+0
WHH-SK-103E

INTENTIONALLY LEFT BLANK

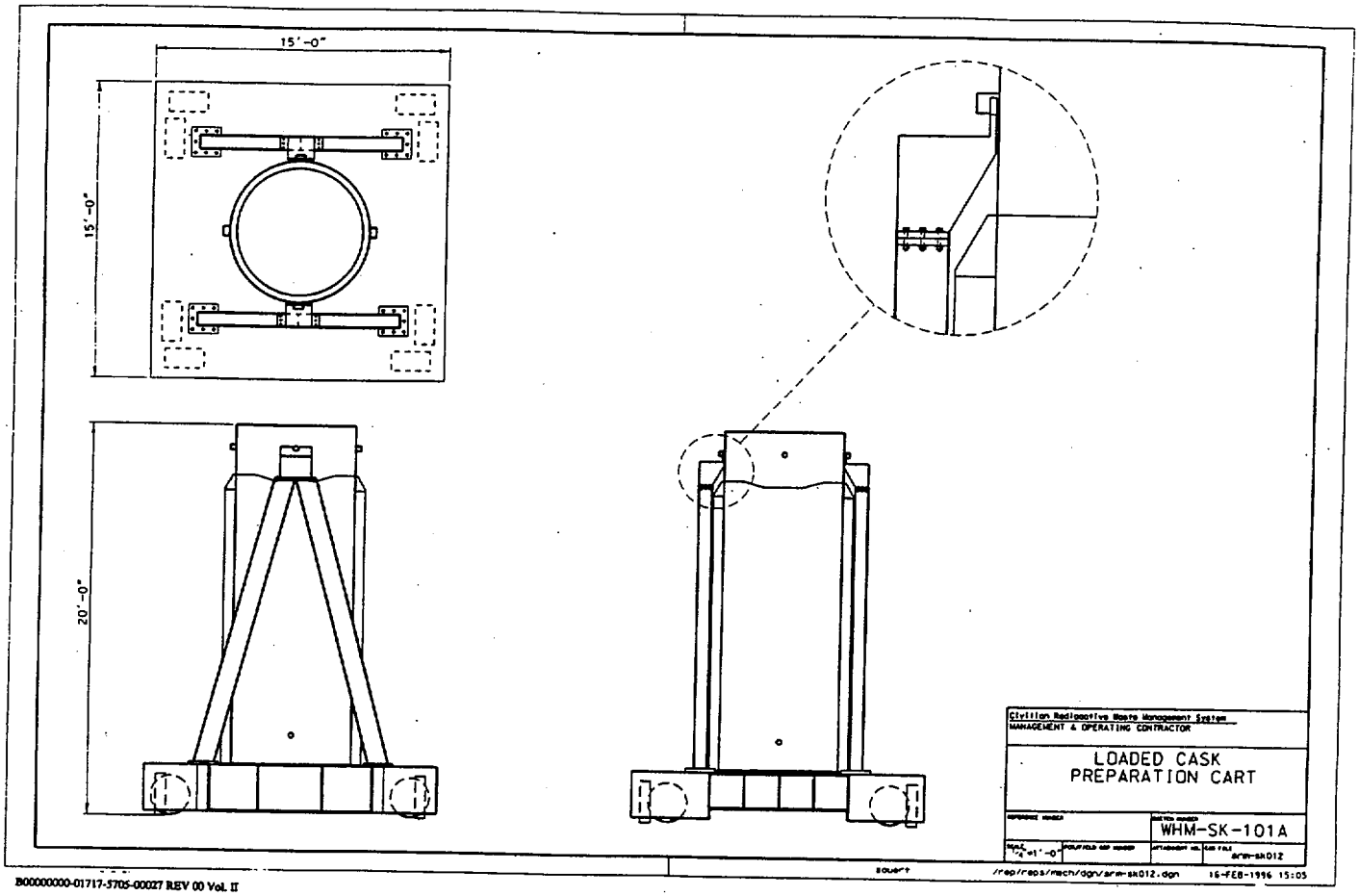
15'-0"
15'-0"
20'-0"
Civilian Radioactive Waste Management System
MANAGEMENT & OPERATING CONTRACTOR
LOADED CASK
PREPARATION CART
WHM-SK-101A
arm-sk012
/rep/reps/mech/dgn/arm-sk012.dgn
16-FEB-1996 15:05

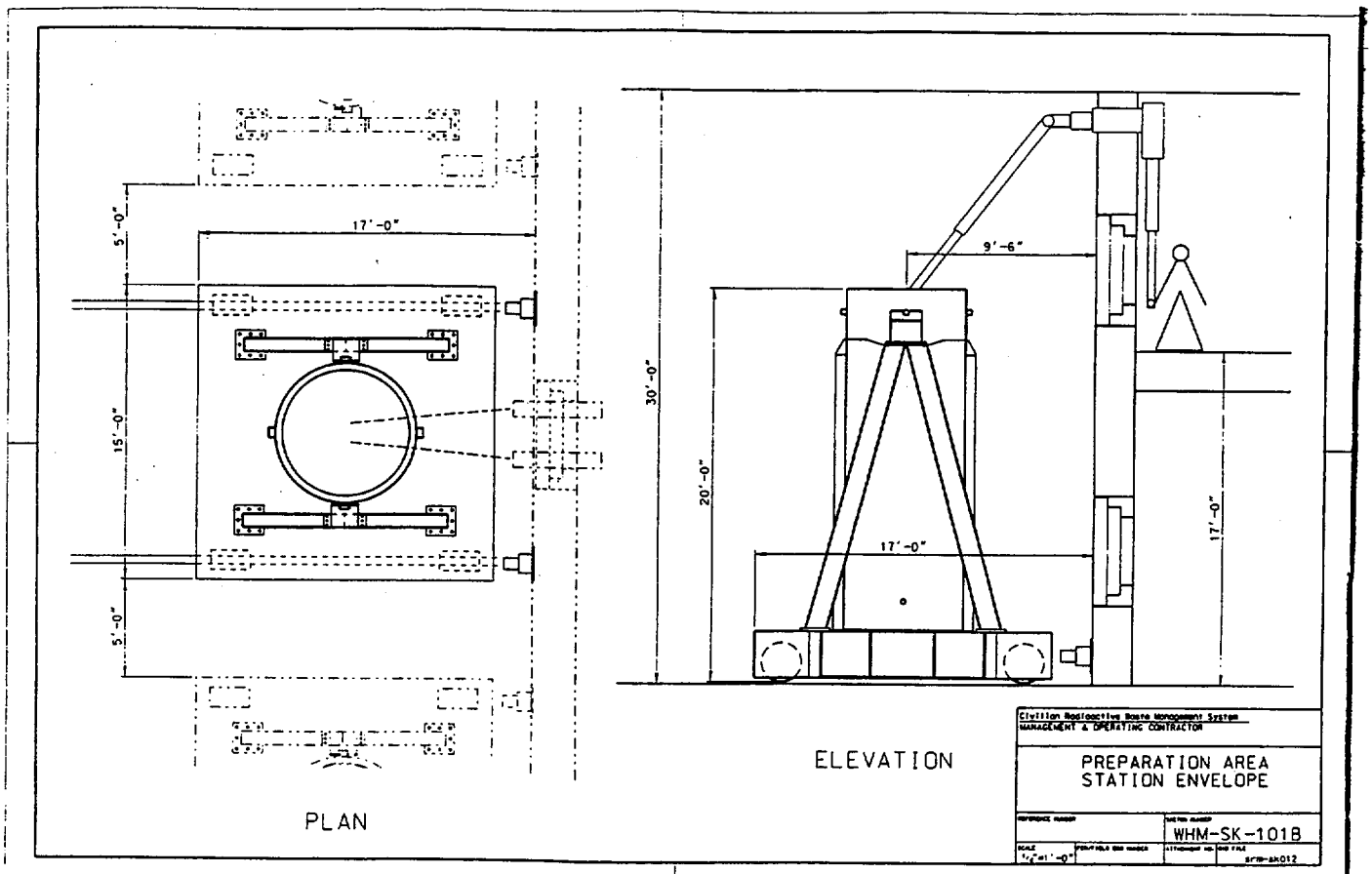
5'-0"
17'-0"
15'-0"
5'-0"
PLAN
30'-0"
20'-0"
9'-6"
17'-0"
17'-0"
ELEVATION
Civilian Radioactive Waste Management System
MANAGEMENT & OPERATING CONTRACTOR
PREPARATION AREA
STATION ENVELOPE
WHM-SK-101B

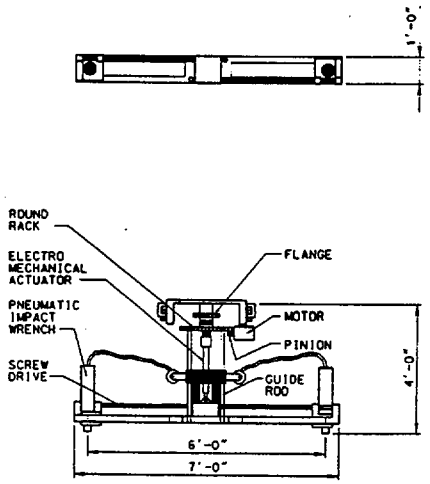

Civilian Radioactive Waste Management System
MANAGEMENT & OPERATING CONTRACTOR

CASK LID BOLTER

WHM-SK-101C

SCALE 1/2"=1'-0"

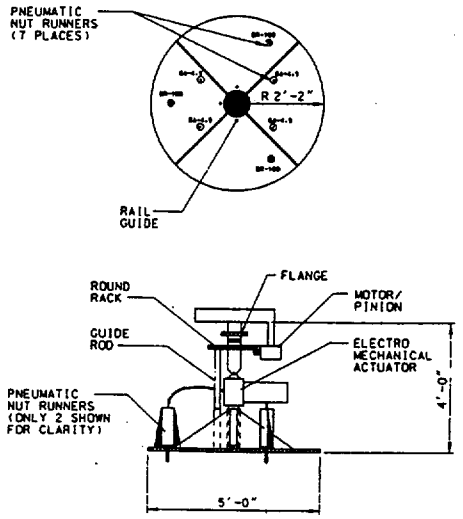

Civilian Radioactive Waste Management System
MANAGEMENT & OPERATING CONTRACTOR

CASK LID REMOVER

WHM-SK-101D

1/4" = 1'-0"

B00000000-01717-5705-00027 REV 00 Vol. II

March 1996

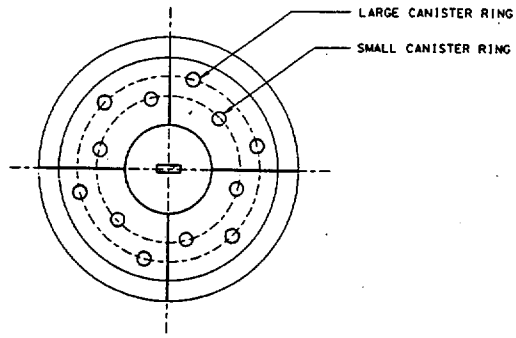

BOTTOM VIEW

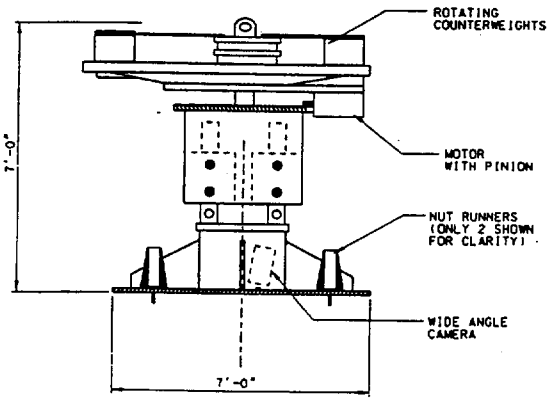

SIDE VIEW

Civilian Radioactive Waste Management System
MANAGEMENT & OPERATING CONTRACTOR

SFA CANISTER ACGLF UNIVERSAL

WHM-SK-101E

SCALE 1/2"=1'-0"

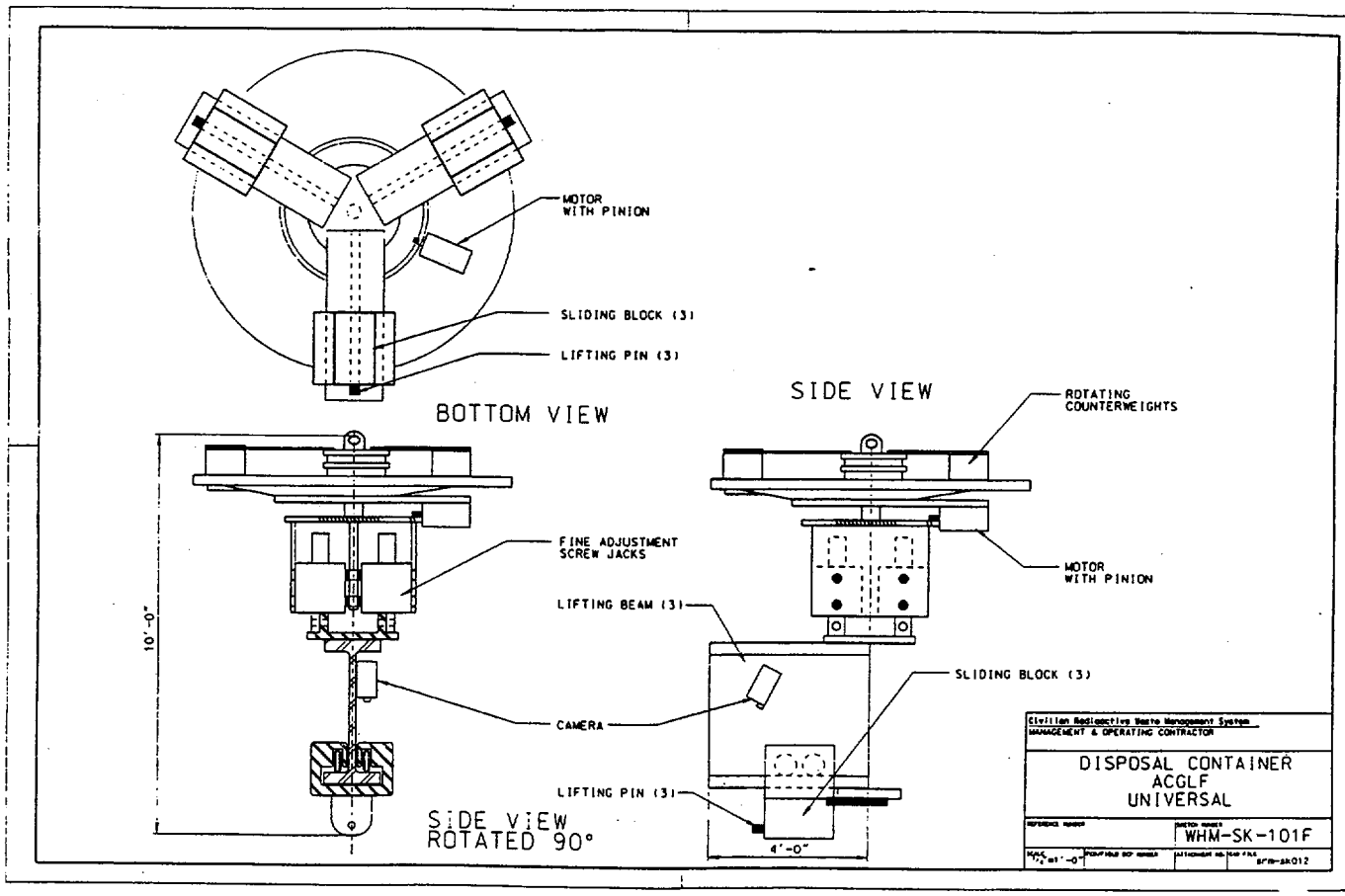
MOTOR
WITH PINION
SLIDING BLOCK (3)
LIFTING PIN (3)
BOTTOM VIEW
SIDE VIEW
ROTATING
COUNTERWEIGHTS
FINE ADJUSTMENT
SCREW JACKS
MOTOR
WITH PINION
LIFTING BEAM (3)
10'-0"
SLIDING BLOCK (3)
CAMERA
LIFTING PIN (3)
SIDE VIEW
ROTATED 90°
4'-0"
Civilian Radioactive Waste Management System
MANAGEMENT & OPERATING CONTRACTOR
DISPOSAL CONTAINER
ACGLF
UNIVERSAL
WHM-SK-101F

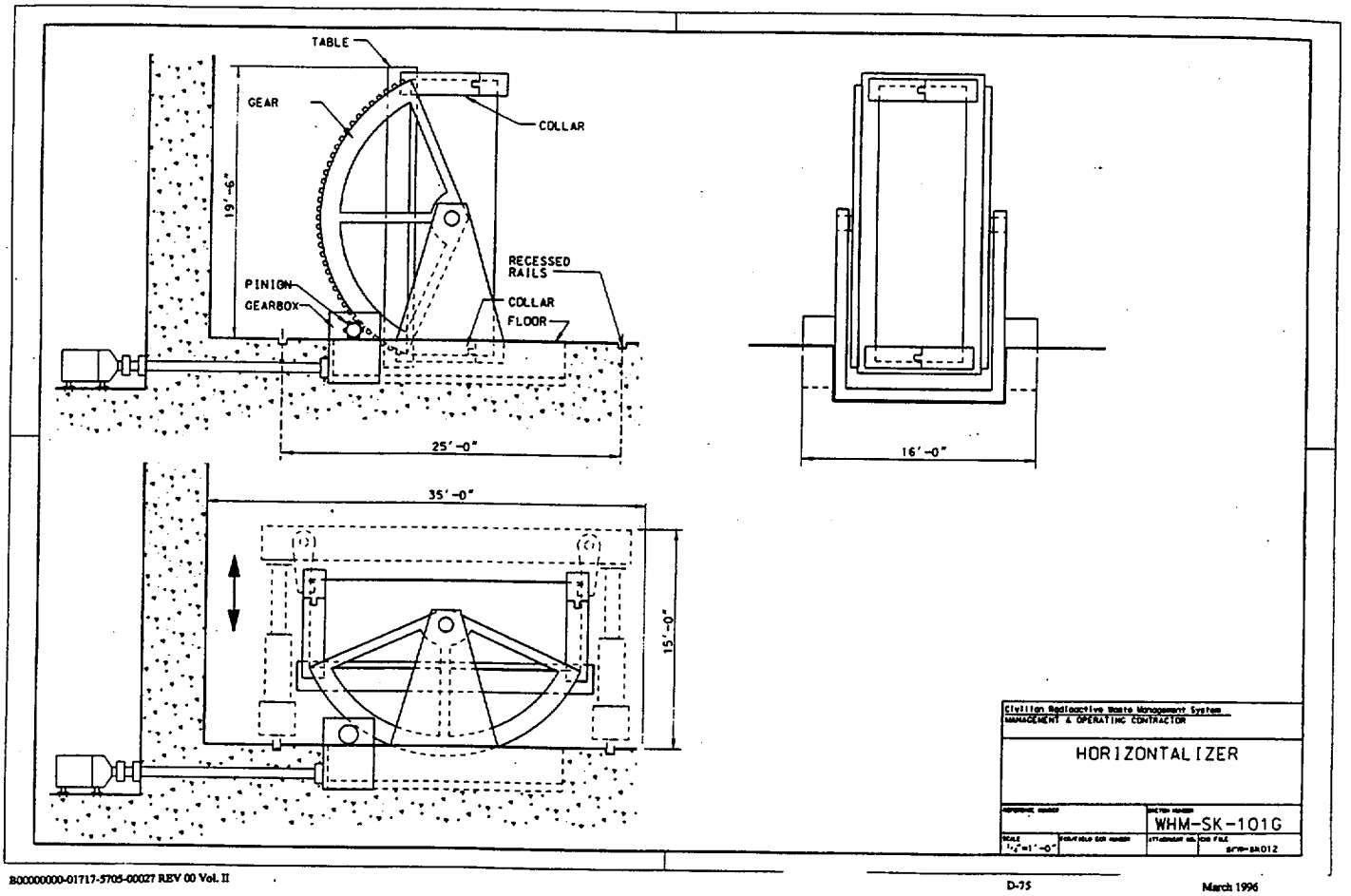
TABLE
GEAR
COLLAR
19'-6"
RECESSED RAILS
PINION
GEARBOX
COLLAR
FLOOR
25'-0"
16'-0"
35'-0"
15'-0"
Civilian Radioactive Waste Management System
MANAGEMENT & OPERATING CONTRACTOR
HORIZONTALIZER
WHM-SK-101G
1/4"=1'-0"

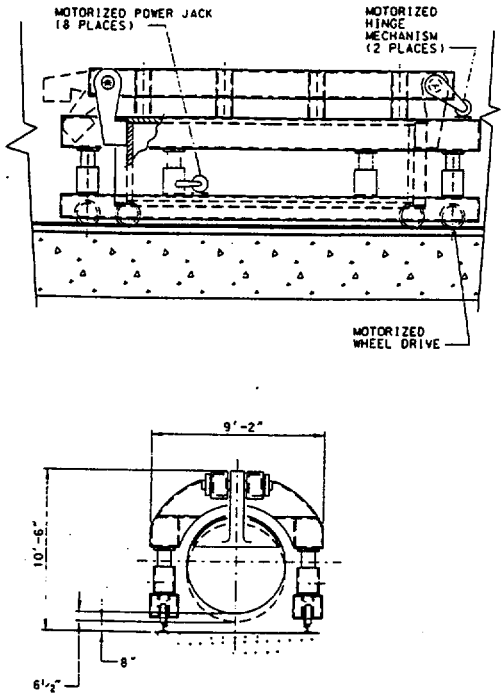

Civilian Radioactive Waste Management System
MANAGEMENT & OPERATING CONTRACTOR

DISPOSAL CONTAINER
TRANSFER GANTRY

WHM-SK-101H

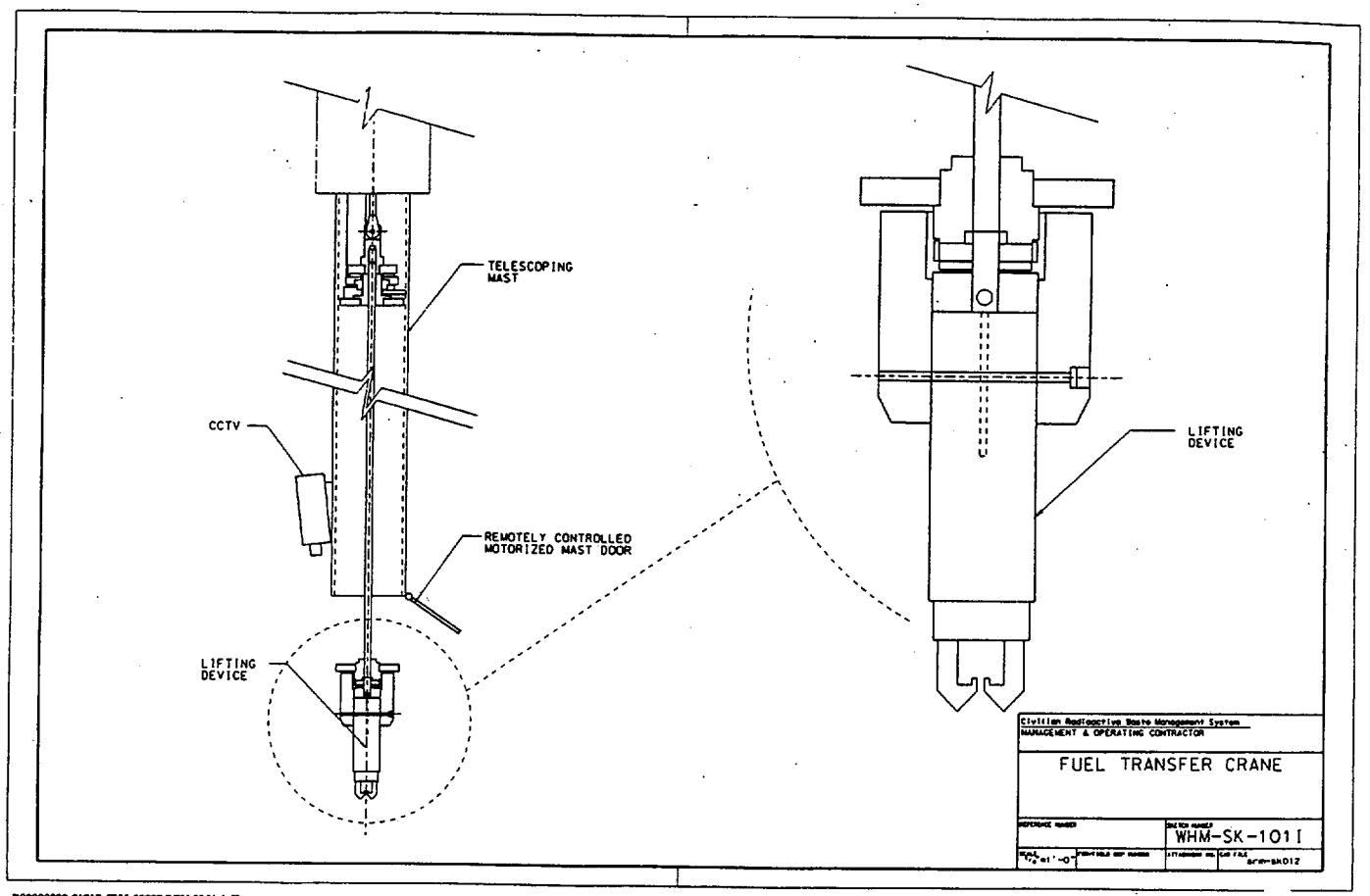
TELESCOPING MAST
CCTV
REMOTELY CONTROLLED MOTORIZED MAST DOOR
LIFTING DEVICE
LIFTING DEVICE
Civilian Radioactive Waste Management System
MANAGEMENT & OPERATING CONTRACTOR
FUEL TRANSFER CRANE
WHM-SK-1011

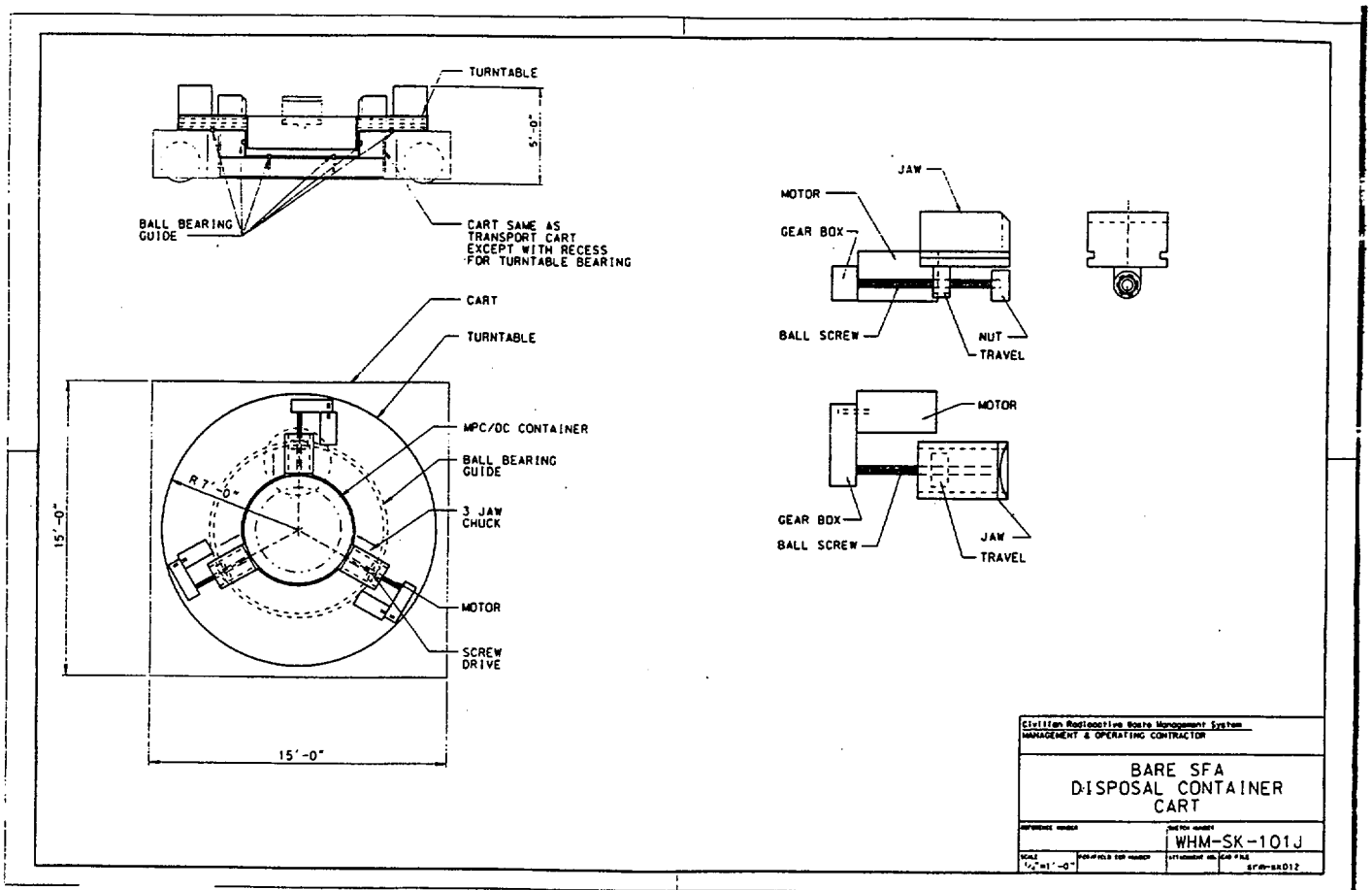
TURNTABLE
5'-0"
BALL BEARING GUIDE
CART SAME AS TRANSPORT CART EXCEPT WITH RECESS FOR TURNTABLE BEARING
CART
TURNTABLE
MPC/OC CONTAINER
BALL BEARING GUIDE
3 JAW CHUCK
MOTOR
SCREW DRIVE
R 7'-0"
15'-0"
15'-0"
JAW
MOTOR
GEAR BOX
BALL SCREW
NUT
TRAVEL
MOTOR
GEAR BOX
BALL SCREW
JAW
TRAVEL
Civilian Radioactive Waste Management System
MANAGEMENT & OPERATING CONTRACTOR
BARE SFA
DISPOSAL CONTAINER
CART
WHM-SK-101J
1/4"=1'-0"

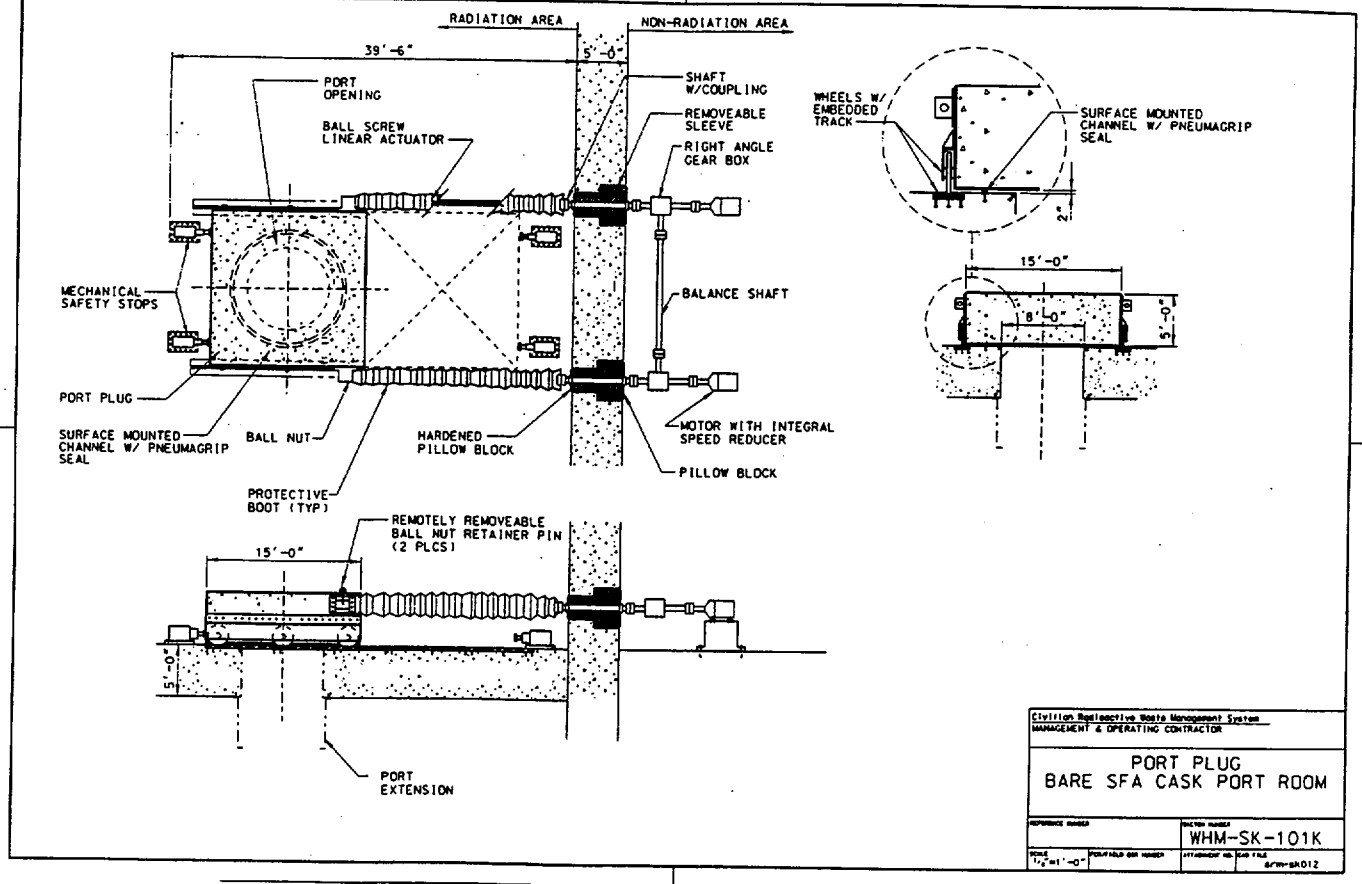
RADIATION AREA
NON-RADIATION AREA
39'-6"
5'-0"
PORT OPENING
BALL SCREW LINEAR ACTUATOR
SHAFT W/COUPLING
REMOVEABLE SLEEVE
RIGHT ANGLE GEAR BOX
BALANCE SHAFT
MECHANICAL SAFETY STOPS
PORT PLUG
SURFACE MOUNTED CHANNEL W/ PNEUMAGRIP SEAL
BALL NUT
HARDENED PILLOW BLOCK
MOTOR WITH INTEGRAL SPEED REDUCER
PILLOW BLOCK
PROTECTIVE BOOT (TYP)
WHEELS W/ EMBEDDED TRACK
SURFACE MOUNTED CHANNEL W/ PNEUMAGRIP SEAL
15'-0"
8'-0"
5'-0"
REMOTELY REMOVEABLE BALL NUT RETAINER PIN (2 PLCS)
15'-0"
5'-0"
PORT EXTENSION
Civilian Radioactive Waste Management System
MANAGEMENT & OPERATING CONTRACTOR
PORT PLUG
BARE SFA CASK PORT ROOM
WHM-SK-101K

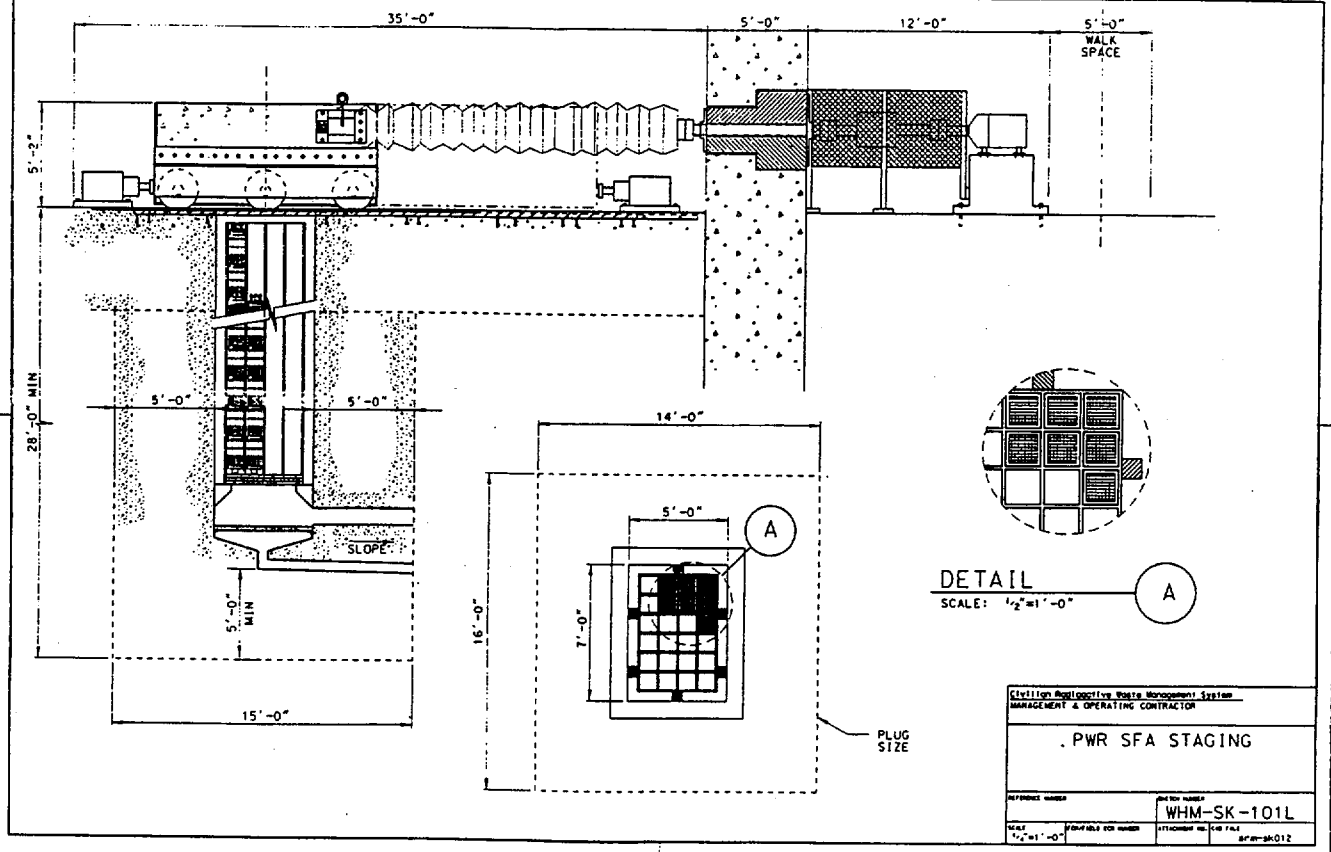
35'-0"
5'-0"
12'-0"
5'-0"
WALK SPACE
5'-2"
28'-0" MIN
5'-0"
5'-0"
SLOPE
5'-0" MIN
15'-0"
14'-0"
5'-0"
A
7'-0"
16'-0"
PLUG SIZE
DETAIL
SCALE: 1/2"=1'-0"
A
Civilian Radioactive Waste Management System
MANAGEMENT & OPERATING CONTRACTOR
PWR SFA STAGING
WHM-SK-101L
1/2"=1'-0"

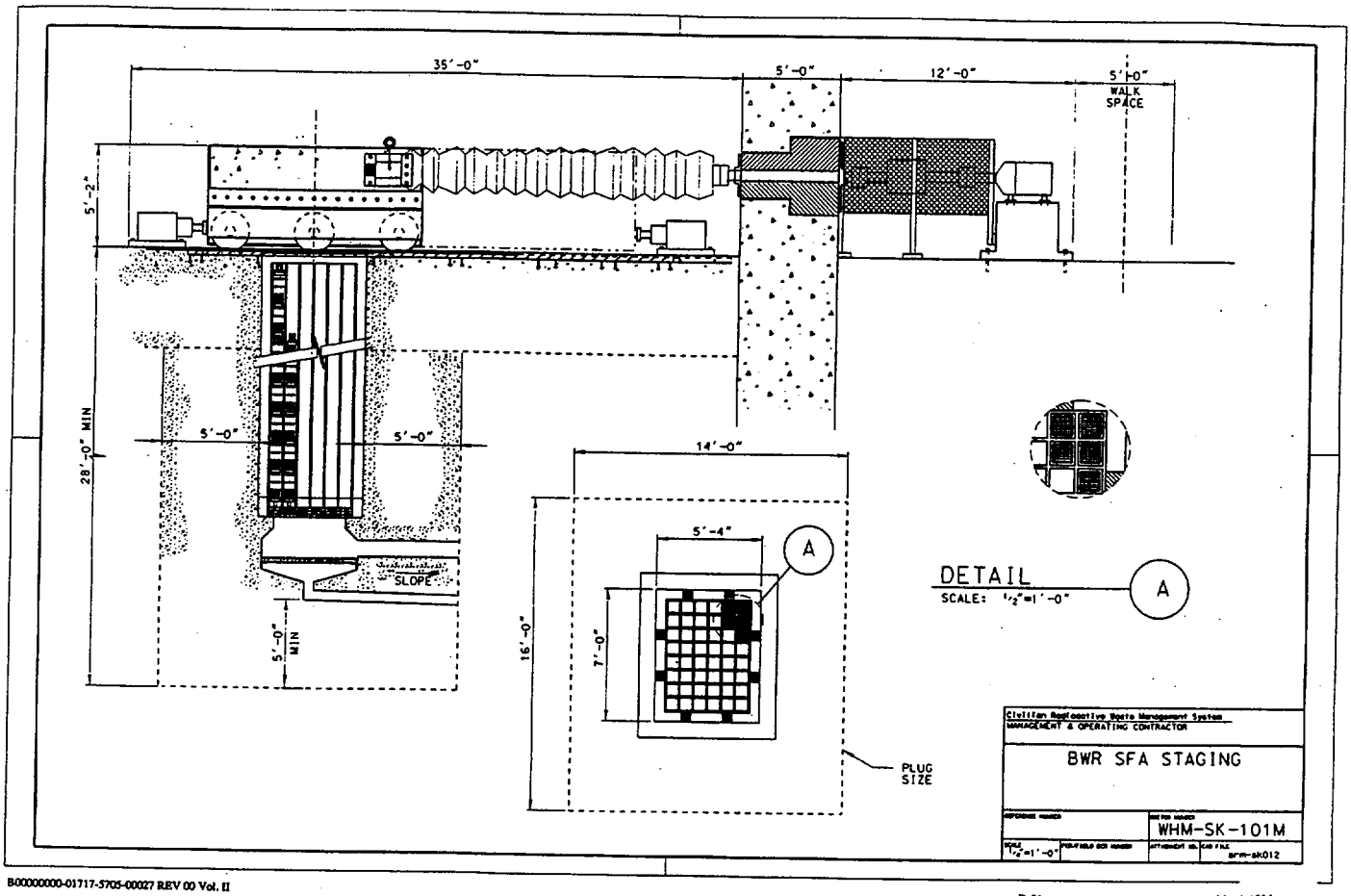
35'-0"
5'-0"
12'-0"
5'-0"
WALK SPACE
5'-2"
28'-0" MIN
5'-0"
5'-0"
SLOPE
5'-0" MIN
14'-0"
5'-4"
A
16'-0"
7'-0"
PLUG SIZE
DETAIL
SCALE: 1/2"=1'-0"
A
Civilian Radioactive Waste Management System
MANAGEMENT & OPERATING CONTRACTOR
BWR SFA STAGING
WHM-SK-101M
1/2"=1'-0"
wrm-sk012

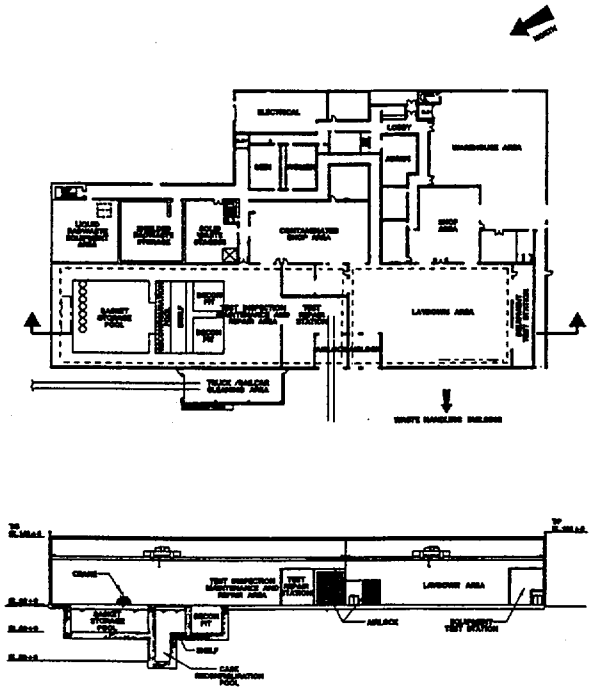

Figure 7.2.3-1. Cask Maintenance Facility (Floor Plan and Building Section)

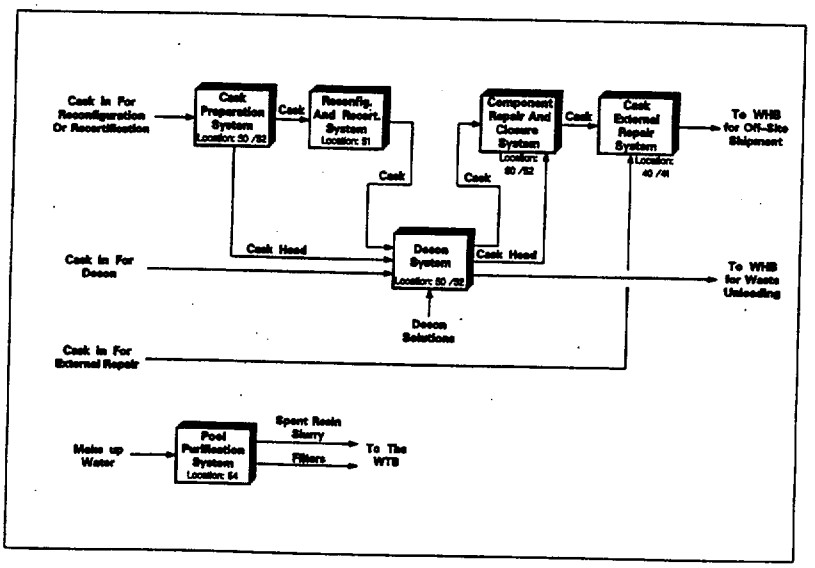

Figure 7.2.3-2 Cask Maintenance System Overview

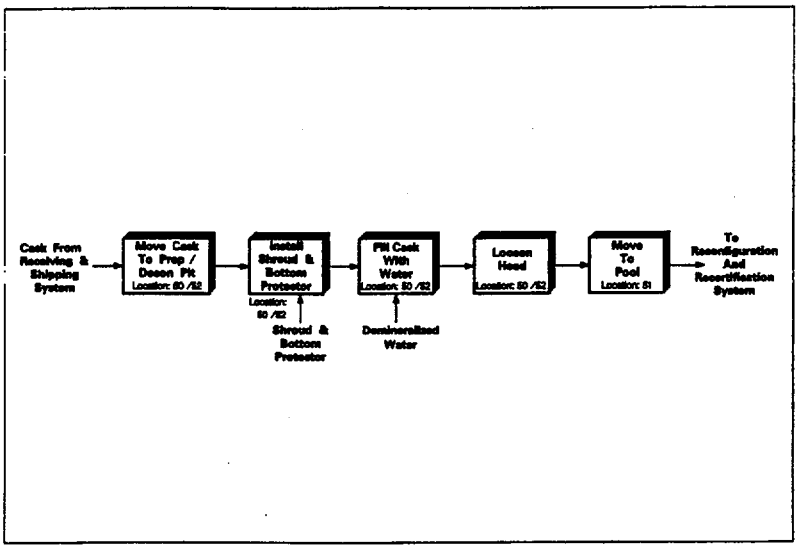

Figure 7.2.3-3. Cask Preparation System

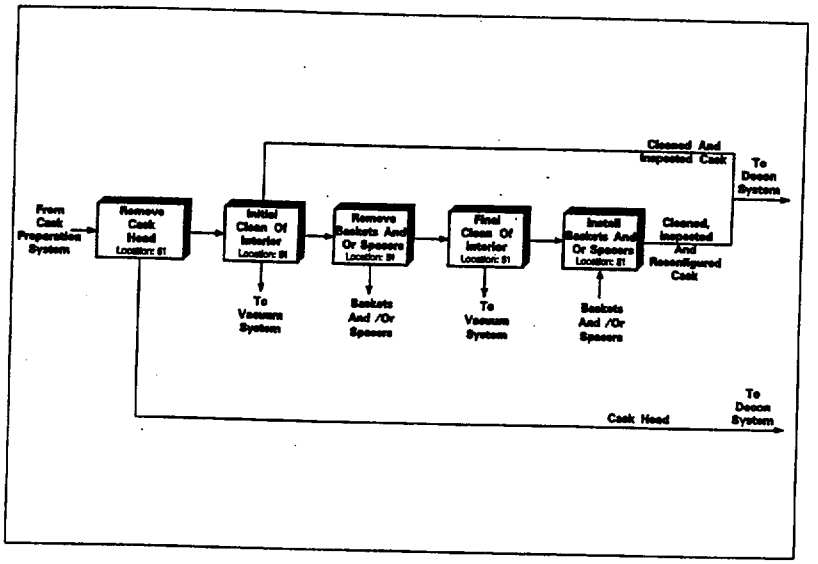

Figure 7.2.3-4. Cask Reconfiguration & Recertification System

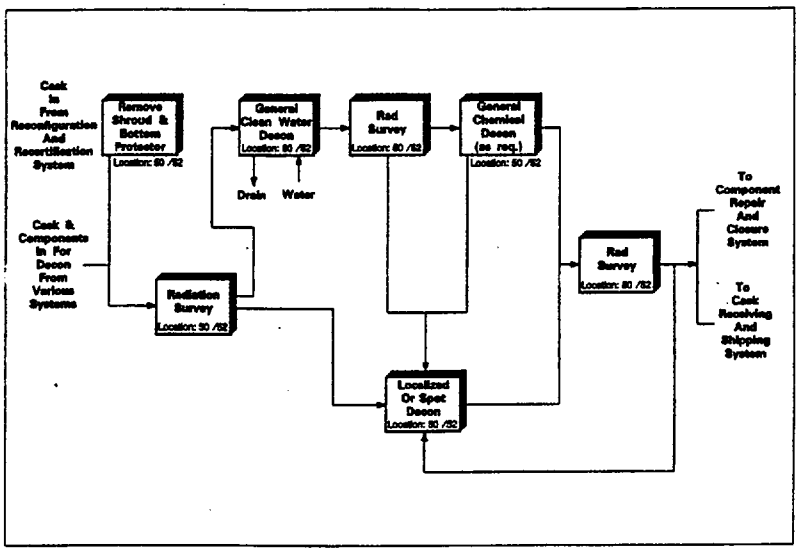

Figure 7.2.3-5. Decontamination System

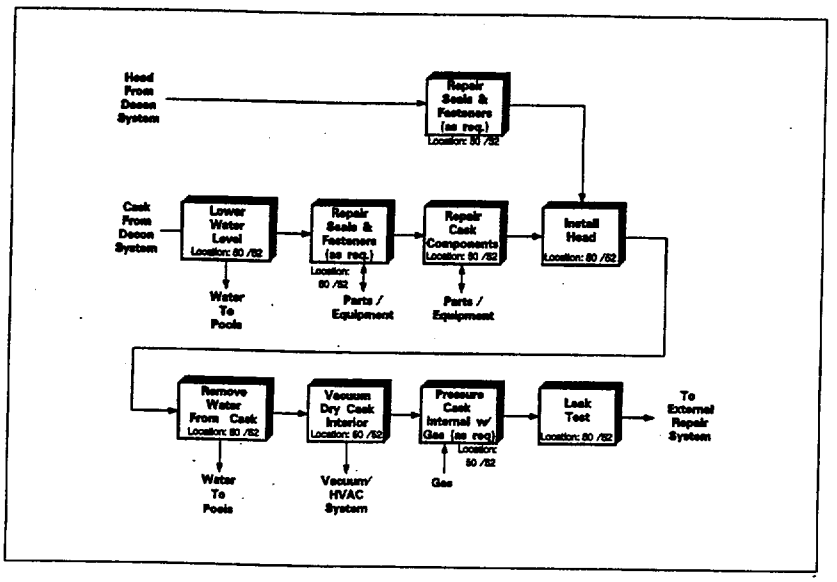

Figure 7.2.3-6. Cask Component Repair And Closure System

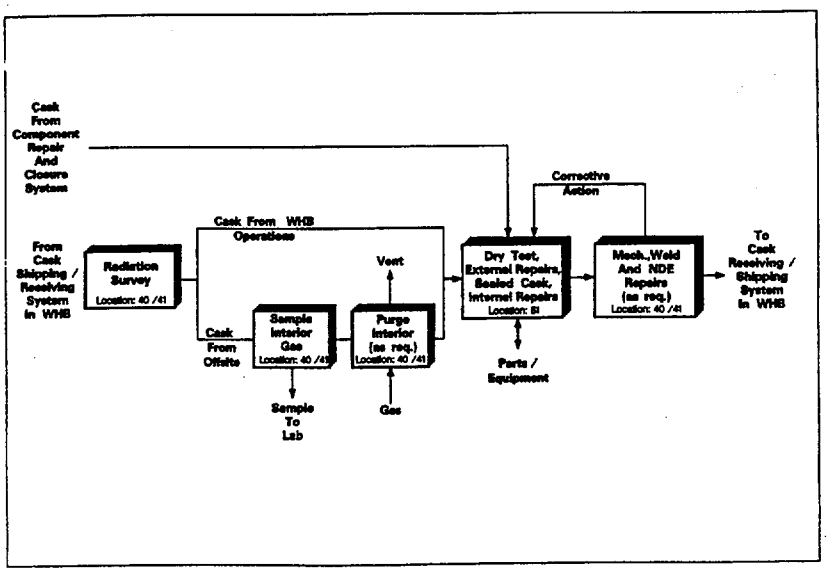

Figure 7.2.3-7. Cask External Repair System

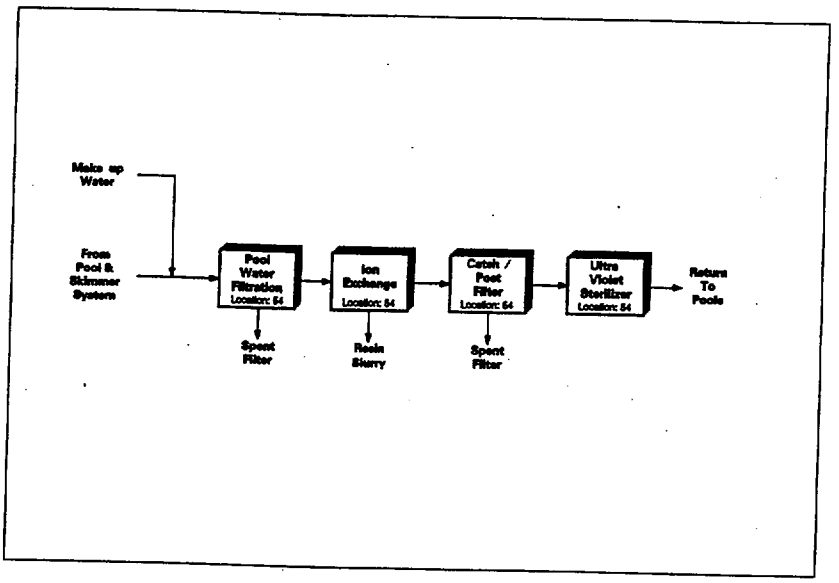

Figure 7.2.3-8. Pool Purification System

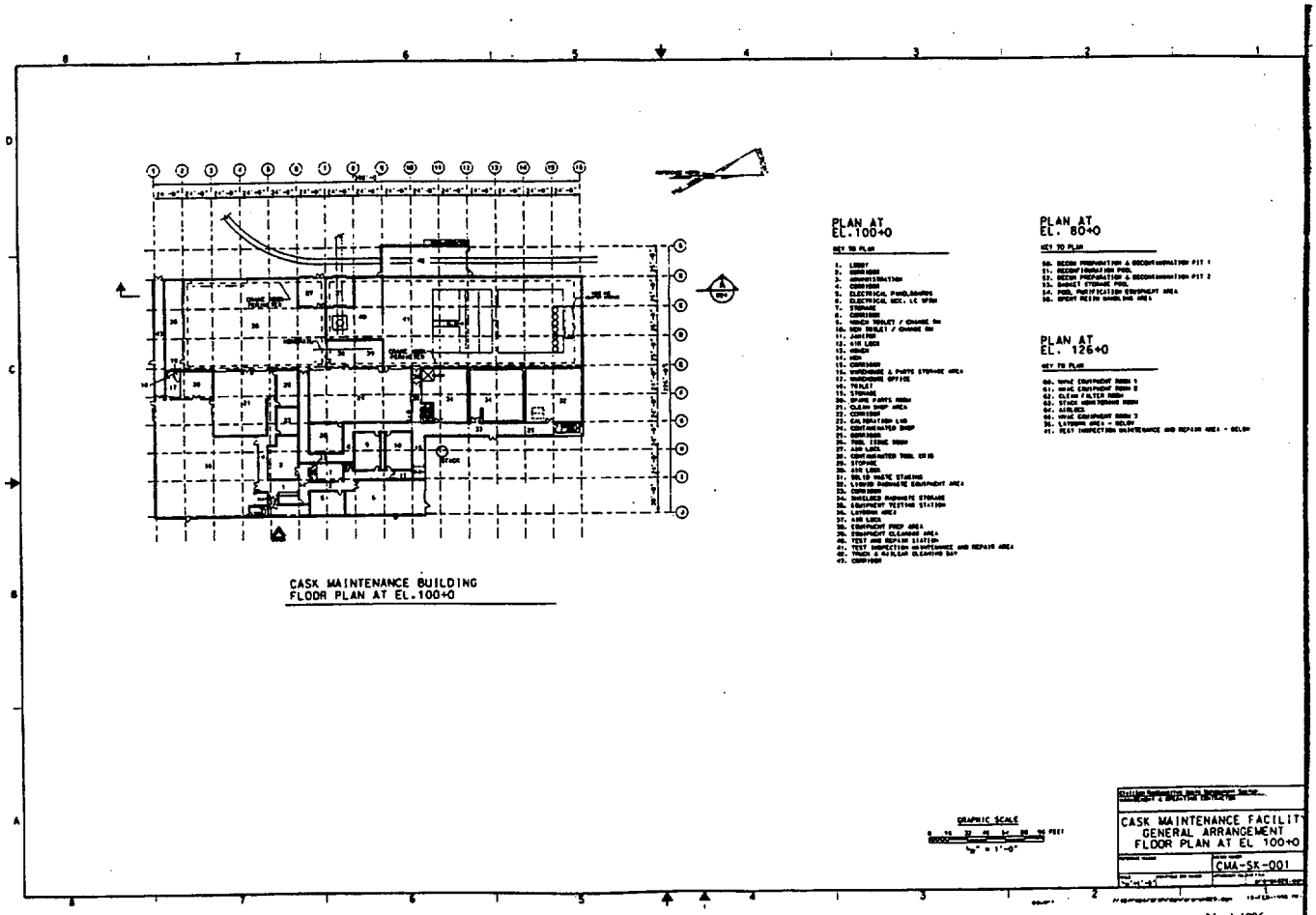
CASK MAINTENANCE BUILDING
FLOOR PLAN AT EL.100+0
PLAN AT
EL.100+0
KEY TO PLAN
PLAN AT
EL. 80+0
KEY TO PLAN
PLAN AT
EL. 126+0
KEY TO PLAN
GRAPHIC SCALE
CASK MAINTENANCE FACILITY
GENERAL ARRANGEMENT
FLOOR PLAN AT EL 100+0
CMA-SK-001

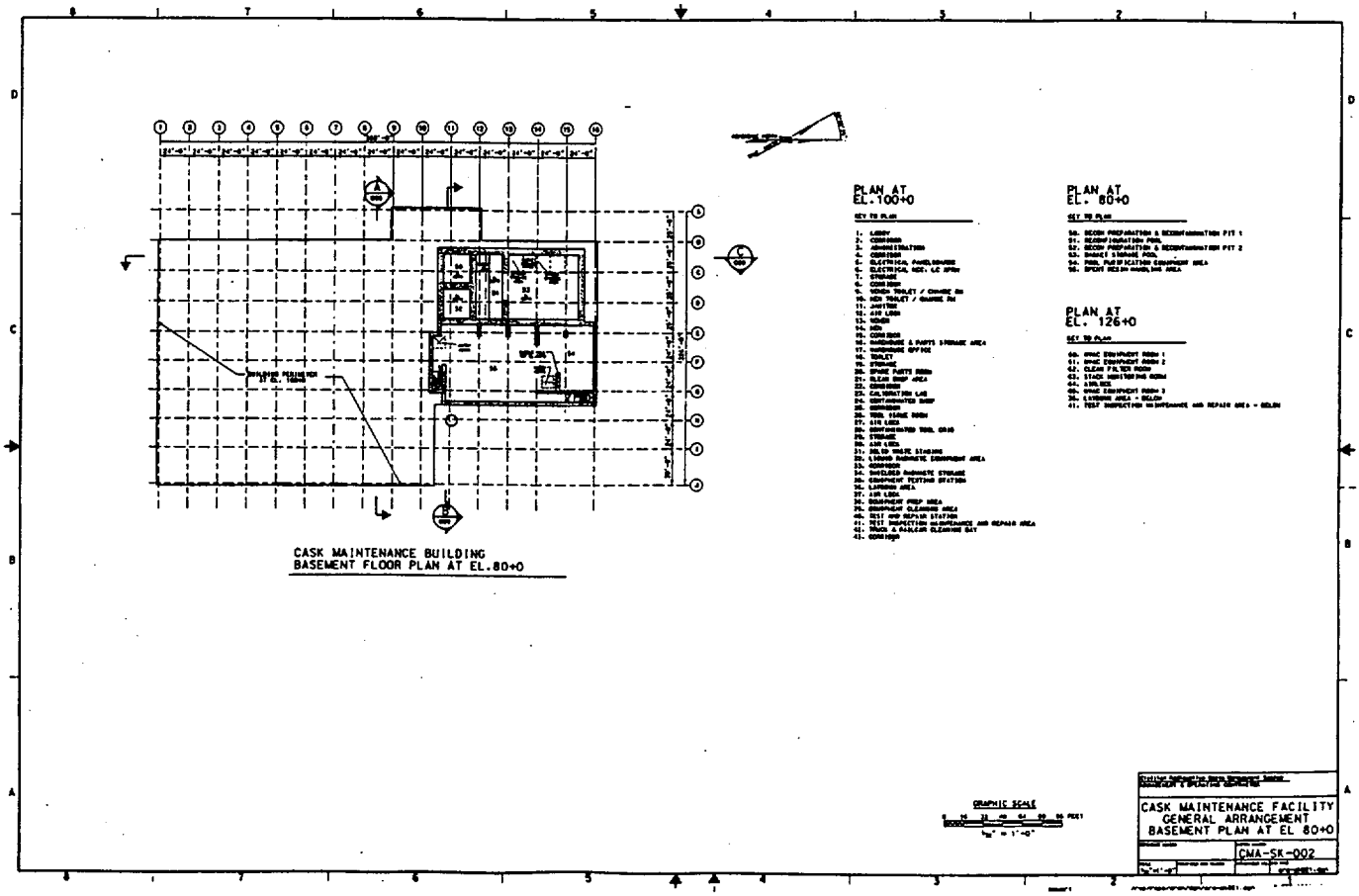
CASK MAINTENANCE BUILDING
BASEMENT FLOOR PLAN AT EL.80+0
PLAN AT
EL.100+0
PLAN AT
EL. 80+0
PLAN AT
EL. 126+0
GRAPHIC SCALE
CASK MAINTENANCE FACILITY
GENERAL ARRANGEMENT
BASEMENT PLAN AT EL 80+0
CMA-SK-002

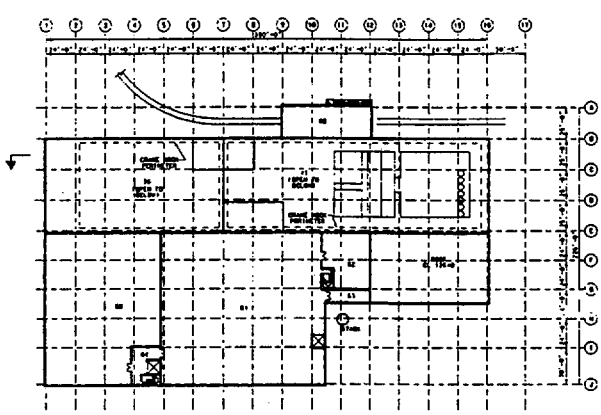

CASK MAINTENANCE BUILDING
FLOOR PLAN AT EL.126+0

PLAN AT
EL.100+0

KEY TO PLAN

1. LOBBY
2. CORRIDOR
3. ADMINISTRATION
4. CORRIDOR
5. ELECTRICAL PANELBOARDS
6. ELECTRICAL MCC, LC SPACE
7. STORAGE
8. CORRIDOR
9. MENS TOILET / CHANGE RM
10. MEN TOILET / CHANGE RM
11. JANITOR
12. AIR LOCK
13. MENS
14. MEN
15. CORRIDOR
16. WAREHOUSE & PARTS STORAGE AREA
17. WAREHOUSE OFFICE
18. TOILET
19. STORAGE
20. SPARE PARTS ROOM
21. CLEAN SHOP AREA
22. CORRIDOR
23. CAL MONITOR LAB
24. CONTAMINATED SHOP
25. CORRIDOR
26. TOOL ISSUE ROOM
27. AIR LOCK
28. CONTAMINATED TOOL CRIB
29. STORAGE
30. [illegible]
31. SOLID WASTE STAGING
32. LIGHTS RADIOACTIVE EQUIPMENT AREA
33. CORRIDOR
34. SHIELDED RADIOACTIVE STORAGE
35. EQUIPMENT TESTING STATION
36. LATRINE AREA
37. AIR LOCK
38. EQUIPMENT PREP AREA
39. EQUIPMENT CLEANING AREA
40. TEST AND REPAIR STATION
41. TEST INSPECTION MAINTENANCE AND REPAIR AREA
42. TRUCK & RAILCAR CLEANING BAY
43. CORRIDOR

PLAN AT
EL. 80+0

KEY TO PLAN

50. RECEIV PREPARATION & DECONTAMINATION PIT 1
51. RECEIV PREPARATION POOL
52. RECEIV PREPARATION & DECONTAMINATION PIT 2
53. GASKET STORAGE POOL
54. POOL PURIFICATION EQUIPMENT AREA
55. SPENT RESIN HANDLING AREA

PLAN AT
EL. 126+0

KEY TO PLAN

60. HVAC EQUIPMENT ROOM 1
61. HVAC EQUIPMENT ROOM 2
62. CLEAN FILTER ROOM
63. STACK MONITORING ROOM
64. AIRLOCK
65. HVAC EQUIPMENT ROOM 3
66. LATRINE AREA - BELOW
67. TEST INSPECTION MAINTENANCE AND REPAIR AREA - BELOW

GRAPHIC SCALE
0 16 32 48 64 80 96 FEET
1/8" = 1'-0"

CASK MAINTENANCE FACILITY
GENERAL ARRANGEMENT
FLOOR PLAN AT EL 126+0

CMA-SK-003

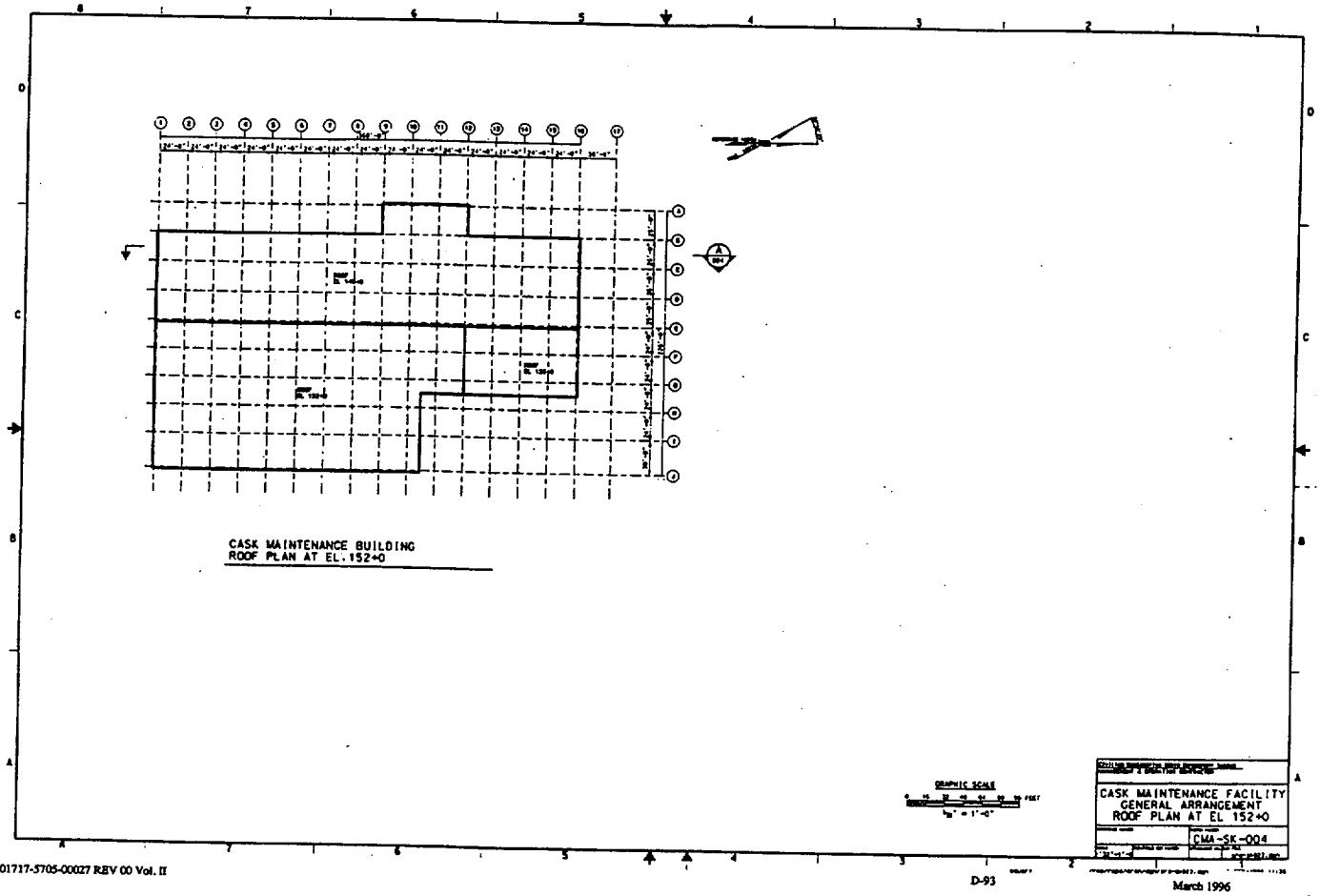
CASK MAINTENANCE BUILDING
ROOF PLAN AT EL. 152+0
GRAPHIC SCALE
CASK MAINTENANCE FACILITY
GENERAL ARRANGEMENT
ROOF PLAN AT EL 152+0
CMA-SK-004

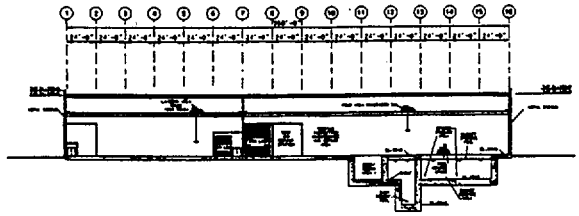

BUILDING SECTION A-A (THRU POOL AREA)

GRAPHIC SCALE

CASK MAINTENANCE FACILITY
GENERAL ARRANGEMENTS
BUILDING SECTIONS

CMA-SK-005

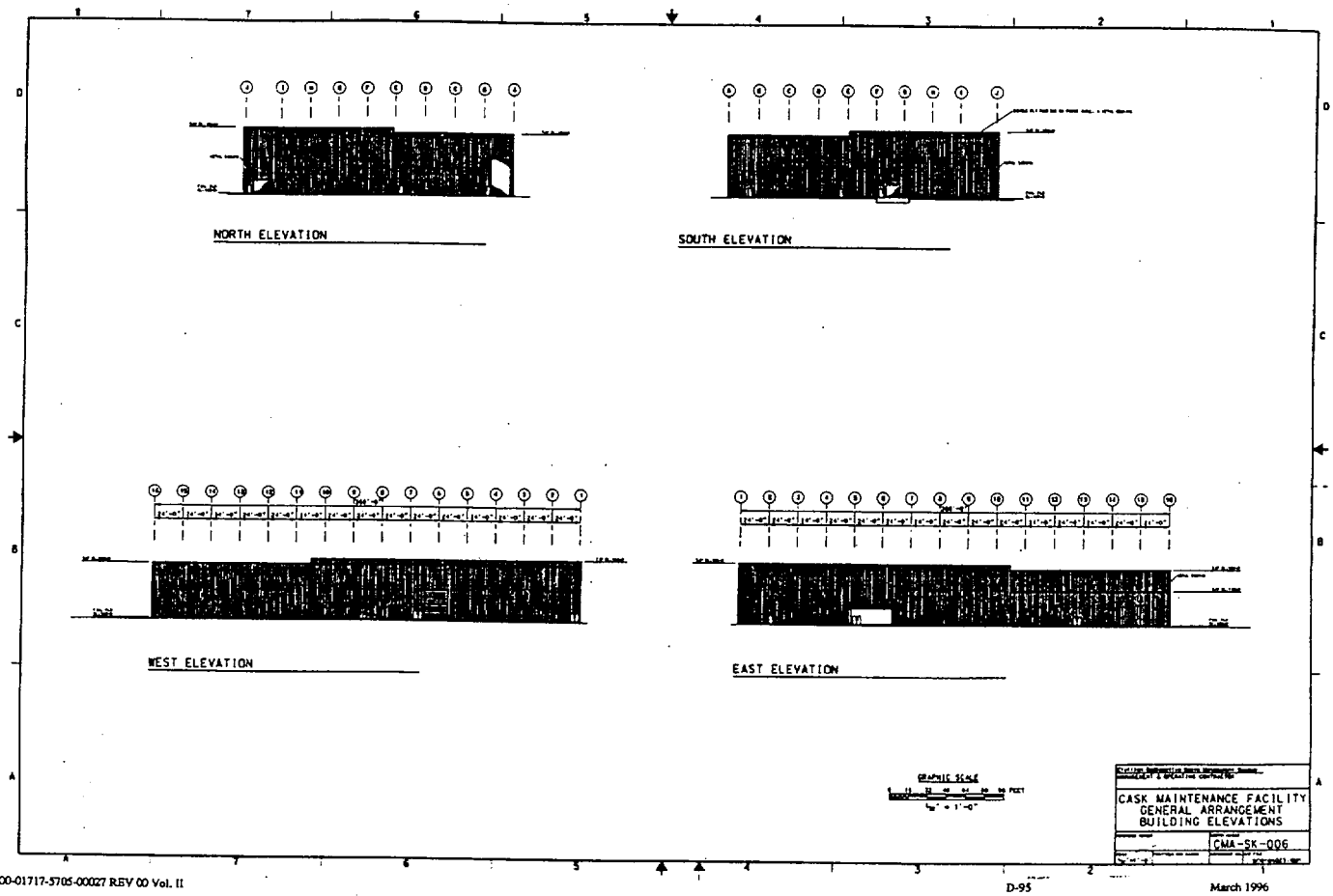
NORTH ELEVATION
SOUTH ELEVATION
WEST ELEVATION
EAST ELEVATION
GRAPHIC SCALE
CASK MAINTENANCE FACILITY
GENERAL ARRANGEMENT
BUILDING ELEVATIONS
CMA-SK-006

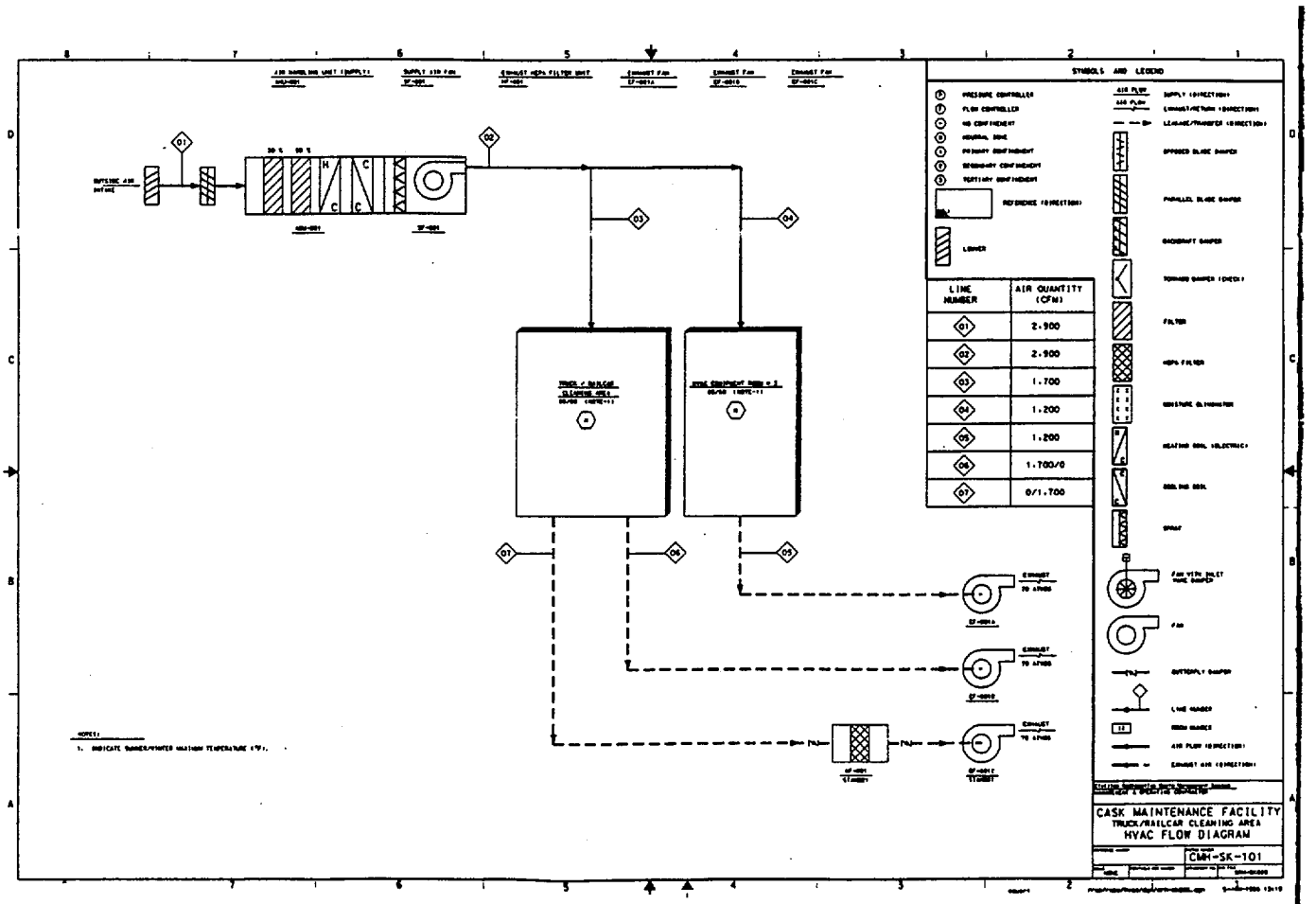
SYMBOLS AND LEGEND
LINE NUMBER
AIR QUANTITY (CFM)
01 2,900
02 2,900
03 1,700
04 1,200
05 1,200
06 1,700/0
07 0/1,700
CASK MAINTENANCE FACILITY
TRUCK/RAILCAR CLEANING AREA
HVAC FLOW DIAGRAM
CMM-SK-101

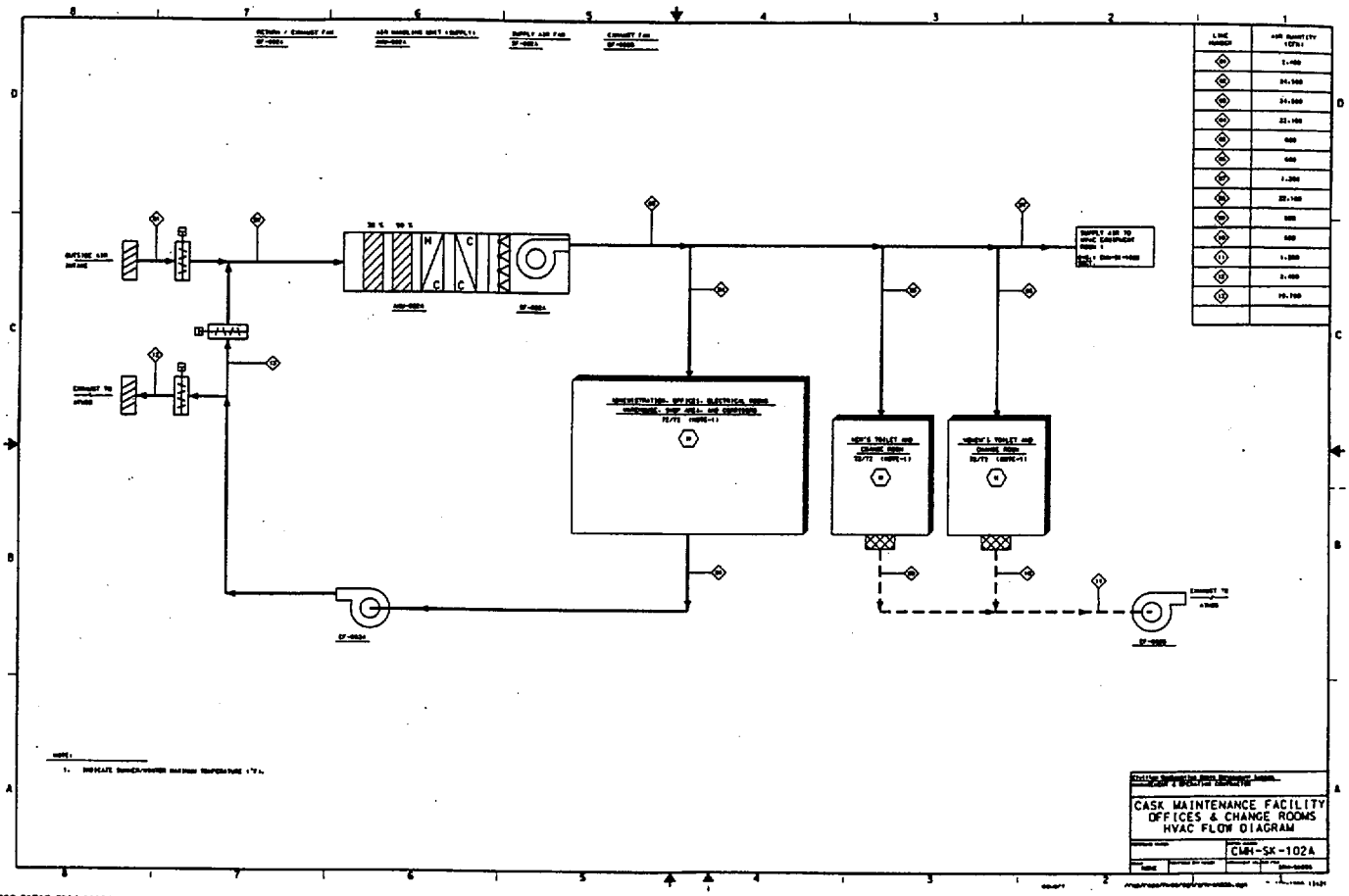
CASK MAINTENANCE FACILITY
OFFICES & CHANGE ROOMS
HVAC FLOW DIAGRAM
CMH-SK-102A

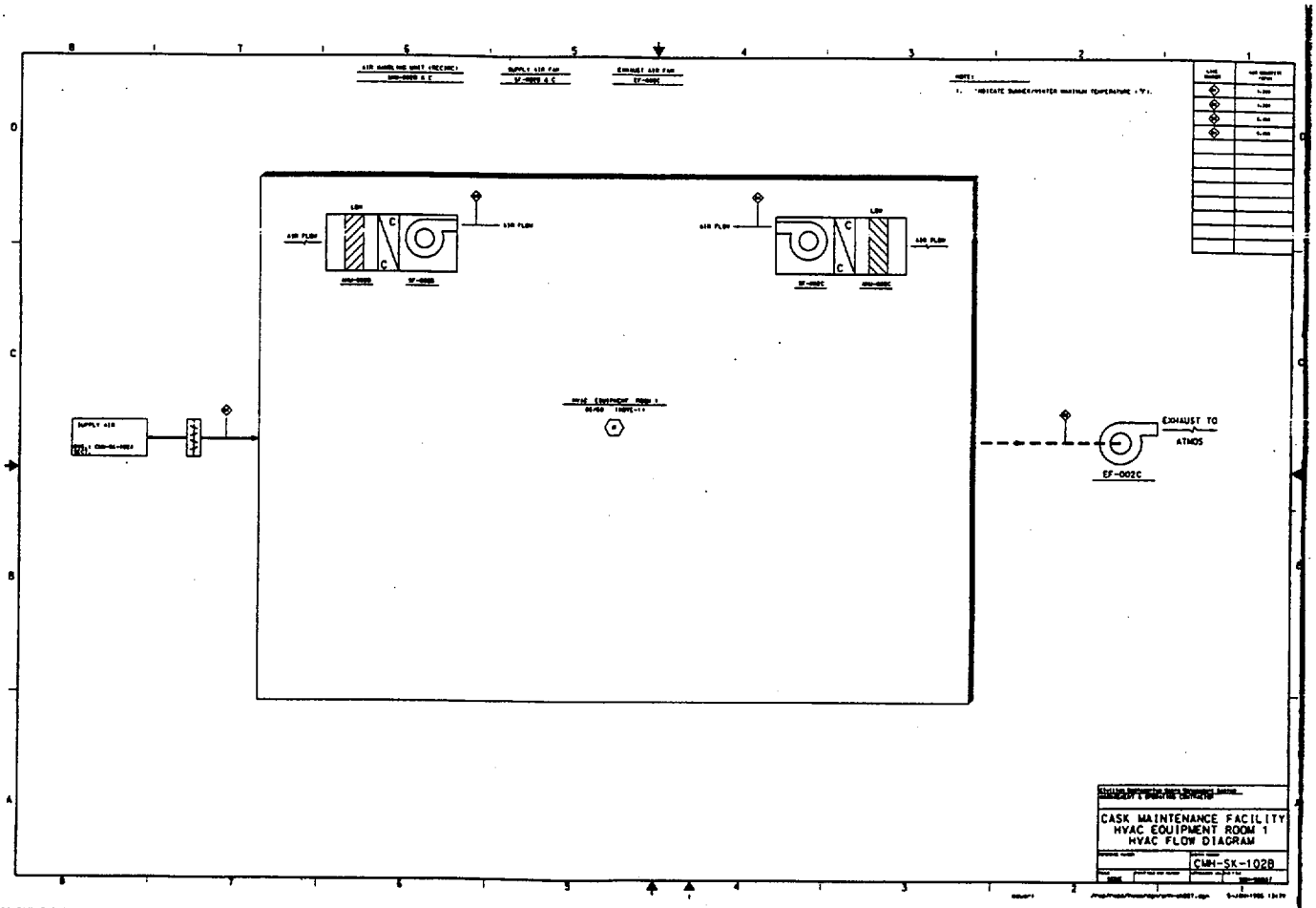
AIR FLOW
AIR FLOW
AIR FLOW
AIR FLOW
EXHAUST TO
ATMOS
EF-002C
CASK MAINTENANCE FACILITY
HVAC EQUIPMENT ROOM 1
HVAC FLOW DIAGRAM
CMH-SK-1028

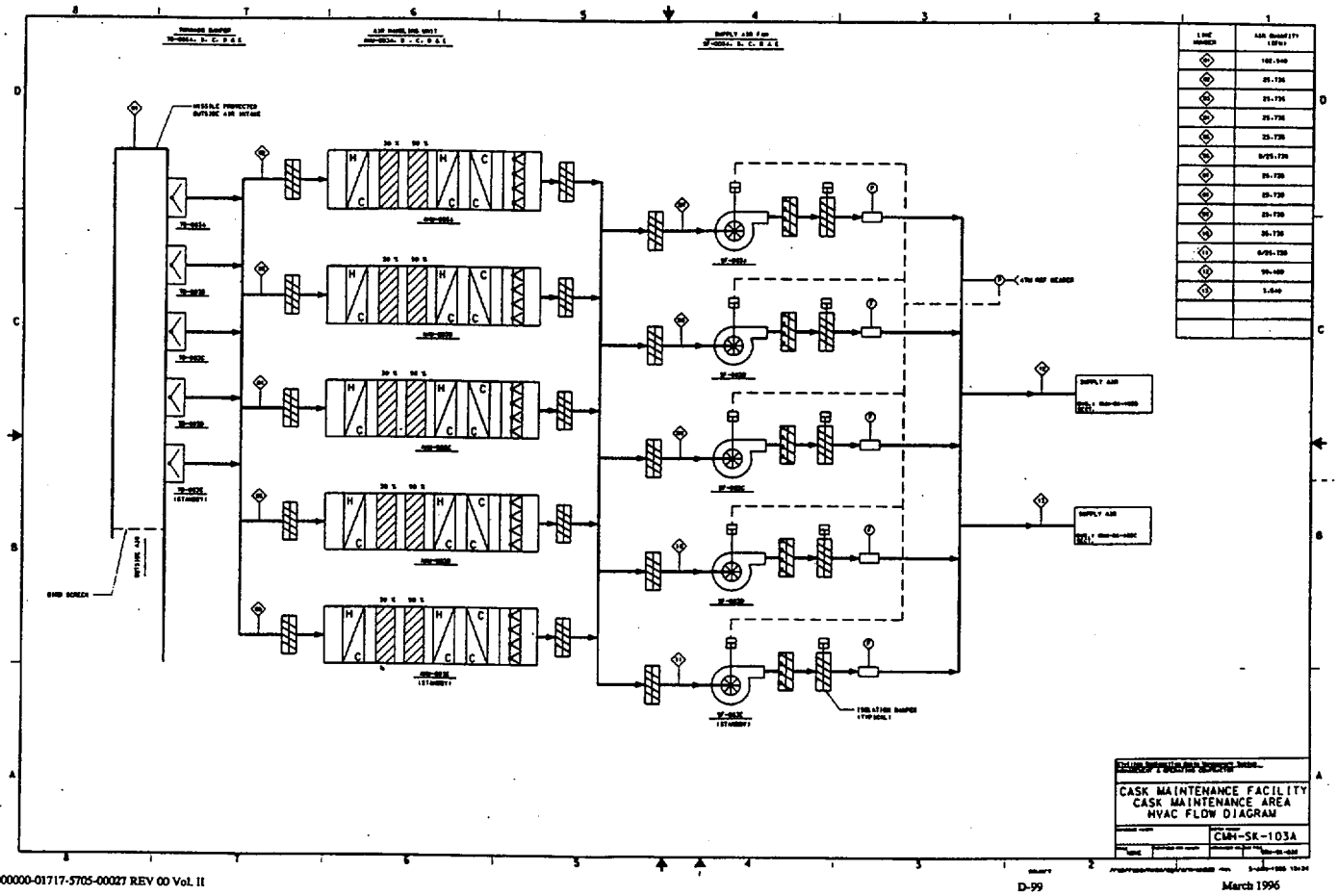
CASK MAINTENANCE FACILITY
CASK MAINTENANCE AREA
HVAC FLOW DIAGRAM
CMH-SK-103A

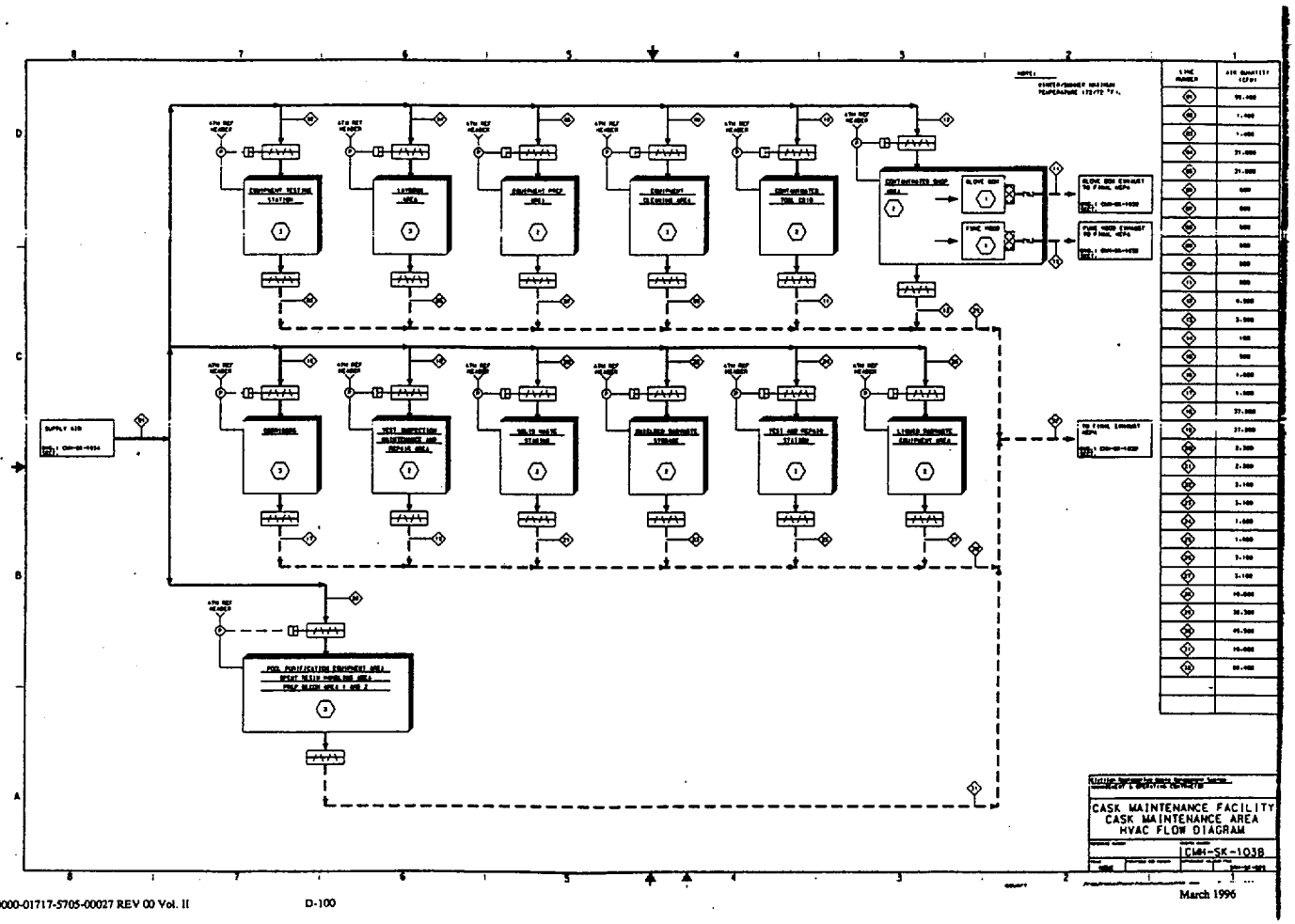
CASK MAINTENANCE FACILITY
CASK MAINTENANCE AREA
HVAC FLOW DIAGRAM
CM4-SK-103B

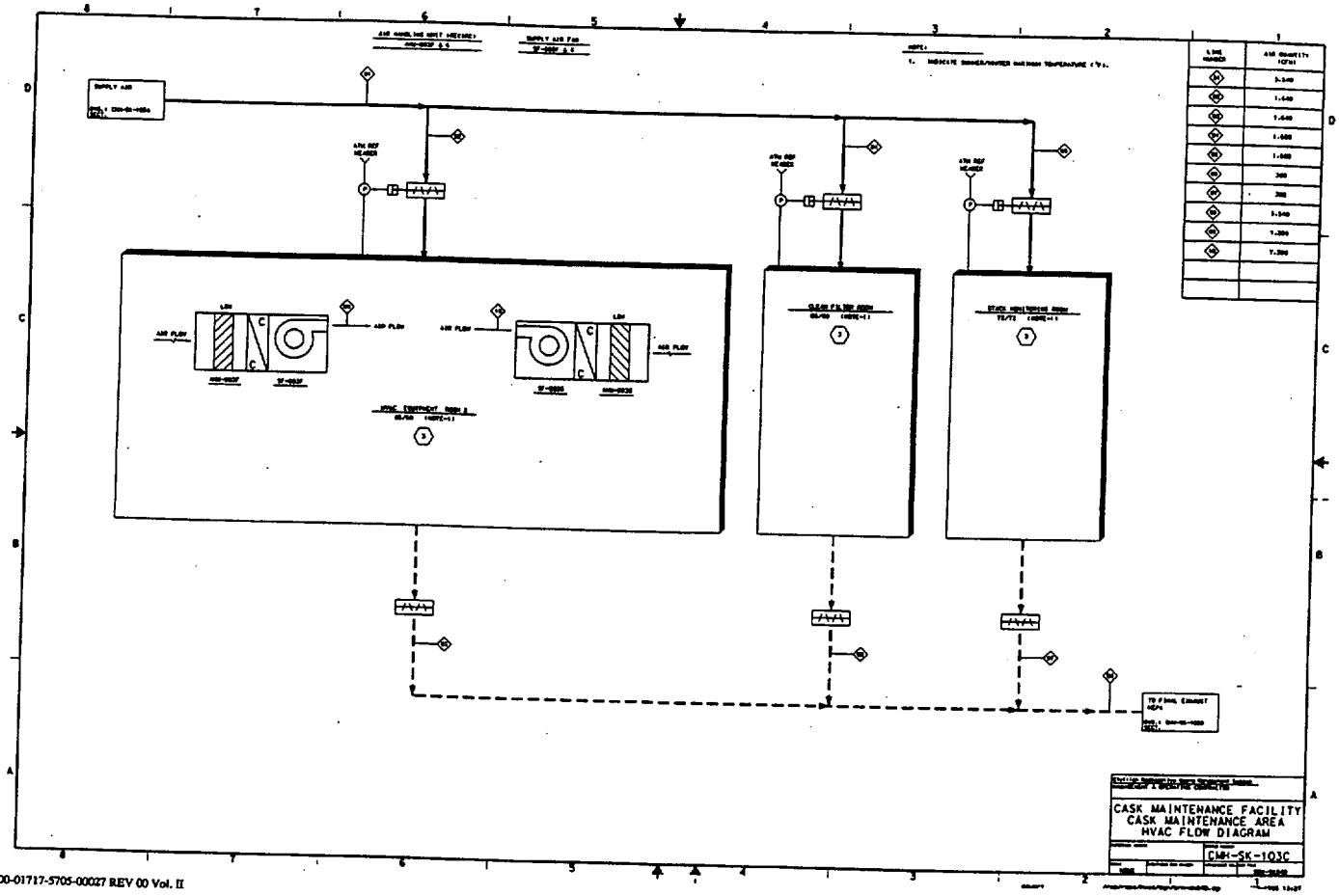
CASK MAINTENANCE FACILITY
CASK MAINTENANCE AREA
HVAC FLOW DIAGRAM
CMM-SK-103C

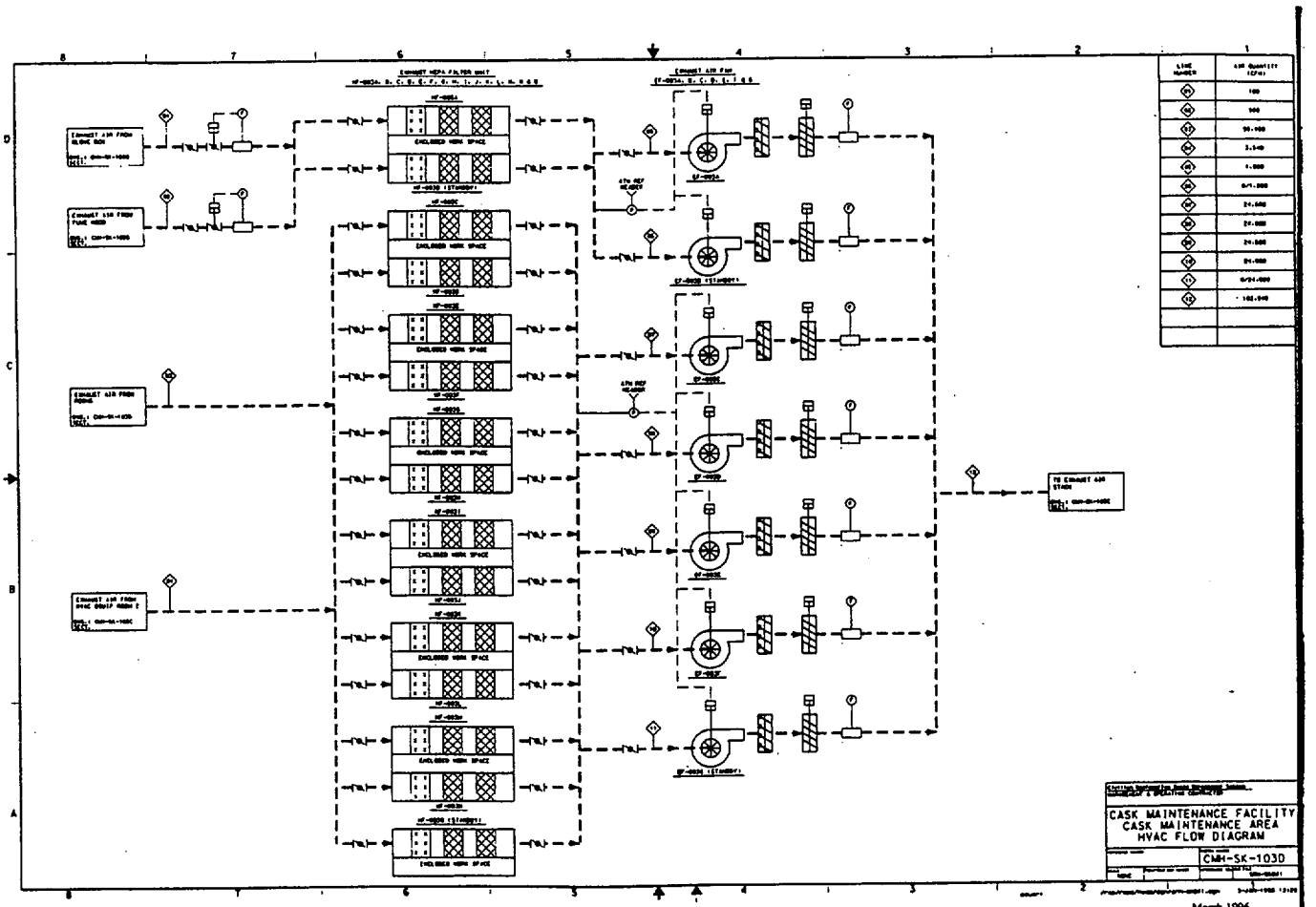
CASK MAINTENANCE FACILITY
CASK MAINTENANCE AREA
HVAC FLOW DIAGRAM
CMH-SK-103D

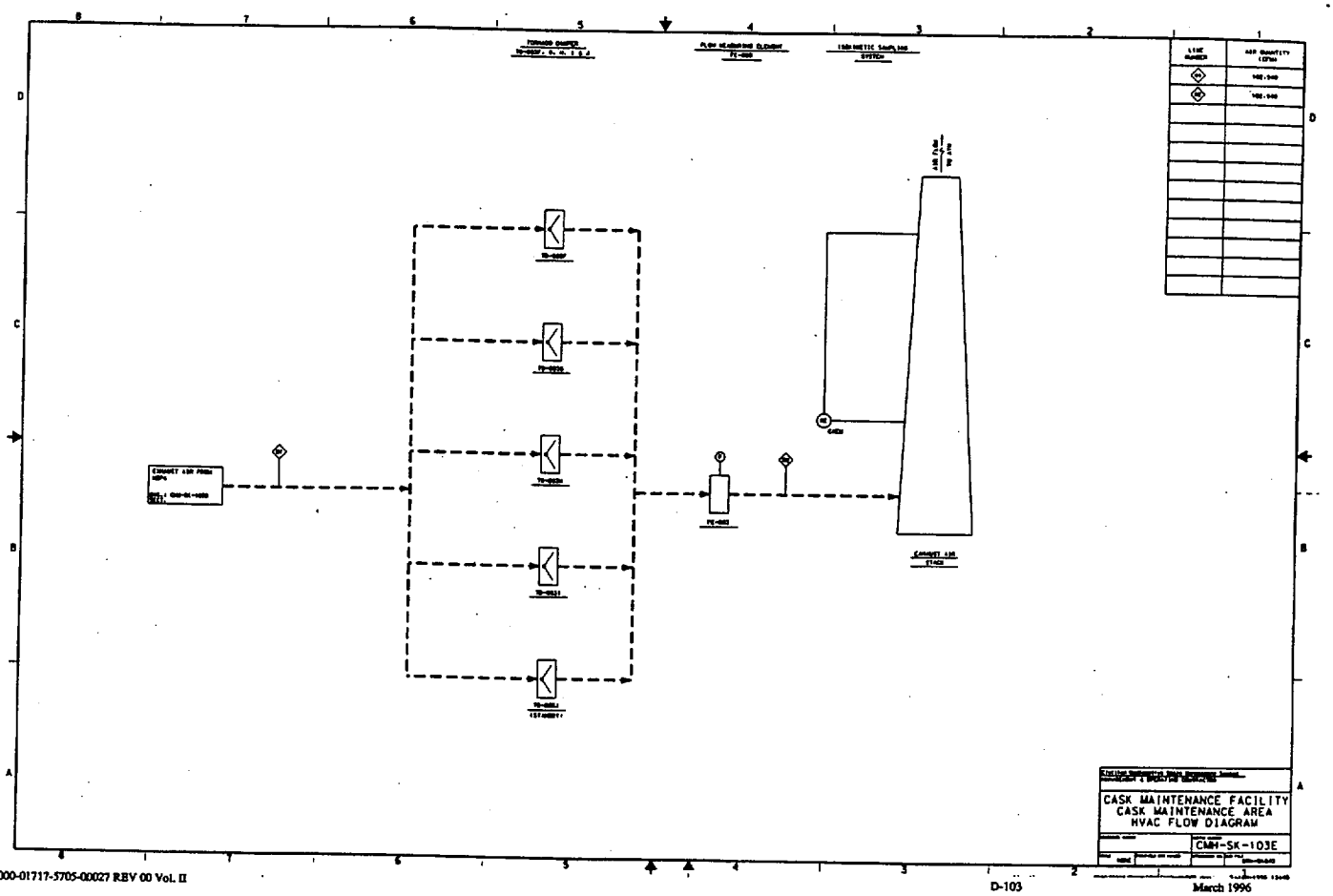
CASK MAINTENANCE FACILITY
CASK MAINTENANCE AREA
HVAC FLOW DIAGRAM
CMH-SK-103E

INTENTIONALLY LEFT BLANK

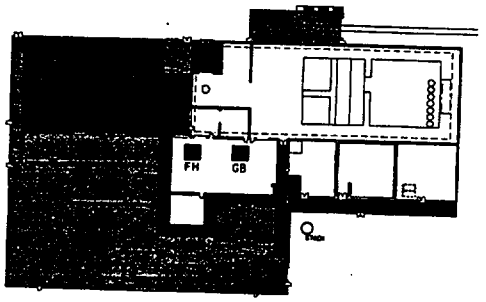

CASK MAINTENANCE FACILITY FLOOR PLAN AT EL.100+0

CONFINEMENT ZONES

PRIMARY (FH-FUME HOOD GB-GLOVE BOX)

SECONDARY

TERTIARY

NON-CONFINEMENT AREA

NEUTRAL

CASK MAINTENANCE FACILITY
HVAC CONFINEMENT ZONES
PLAN AT EL 100+0

CMH-SK-104A

INTENTIONALLY LEFT BLANK

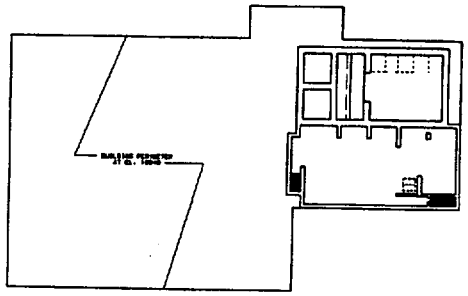

CASK MAINTENANCE FACILITY FLOOR PLAN AT EL. 80+0

CONFINEMENT ZONES

PRIMARY

SECONDARY

TERTIARY

NON-CONFINEMENT AREA

NEUTRAL

CASK MAINTENANCE FACILITY
HVAC CONFINEMENT ZONES
BASEMENT PLAN AT EL 80+0

CMH-SK-104B

INTENTIONALLY LEFT BLANK

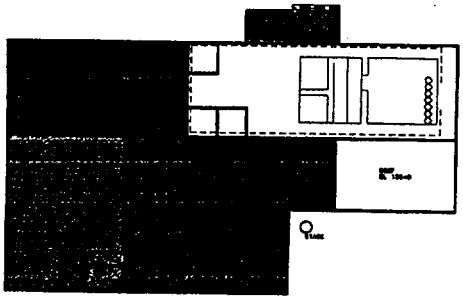

CASK MAINTENANCE FACILITY FLOOR PLAN AT EL.126+0

GRAPHIC SCALE

CONFINEMENT ZONES

PRIMARY

SECONDARY

TERTIARY

NON-CONFINEMENT AREA

NEUTRAL

CASK MAINTENANCE FACILITY
HVAC CONFINEMENT ZONES
PLAN AT EL 126+0

CMH-SK-104C

INTENTIONALLY LEFT BLANK

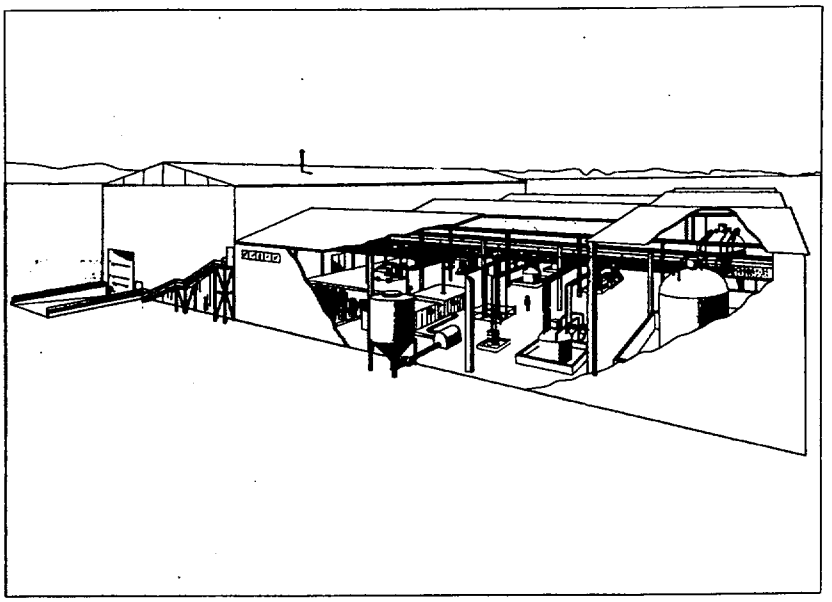

Figure 7.2.4-1. Waste Treatment Operations.

INTENTIONALLY LEFT BLANK

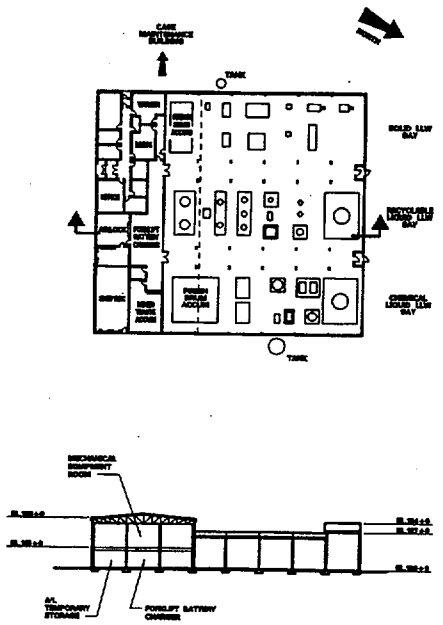

Figure 7.2.4–2. Waste Treatment Building (Floor Plan and Building Section)

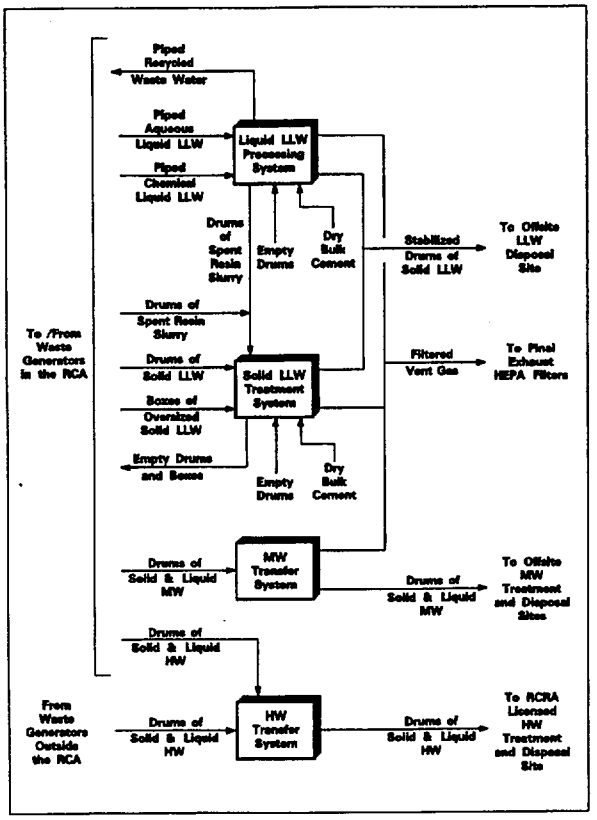

Figure 7.2.4–3. Waste Treatment System Overview

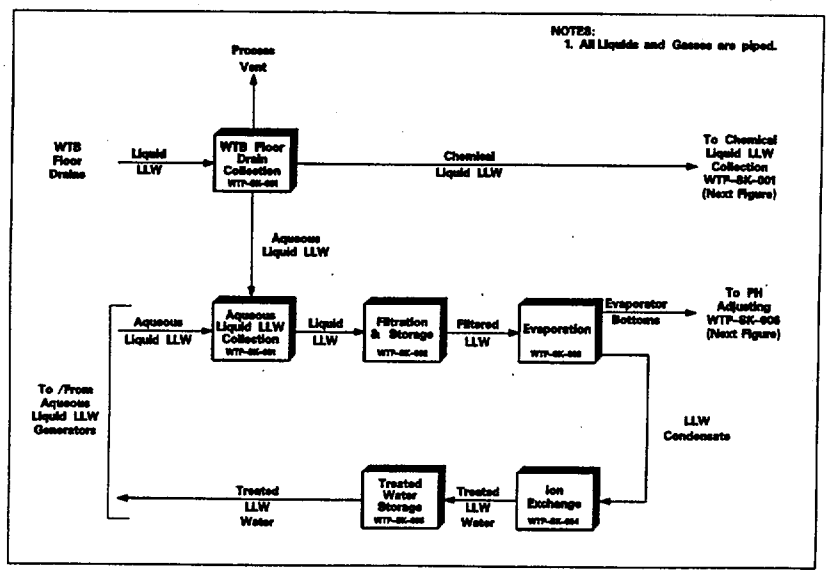

Figure 7.2.4-4. Liquid Low-Level Waste Processing (Aqueous)

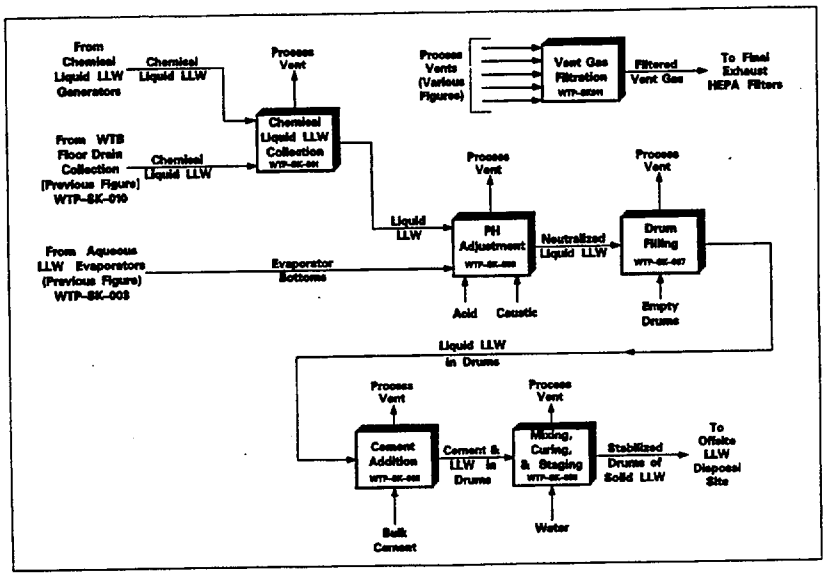

Figure 7.2.4-5. Liquid Low-Level Waste Processing (Chemical)

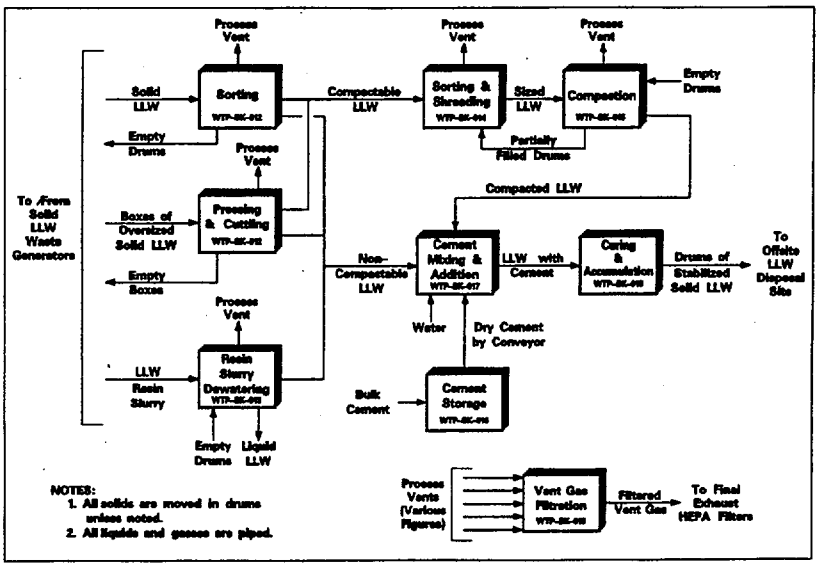

Figure 7.2.4-6. Solid Low-Level Waste Treatment System

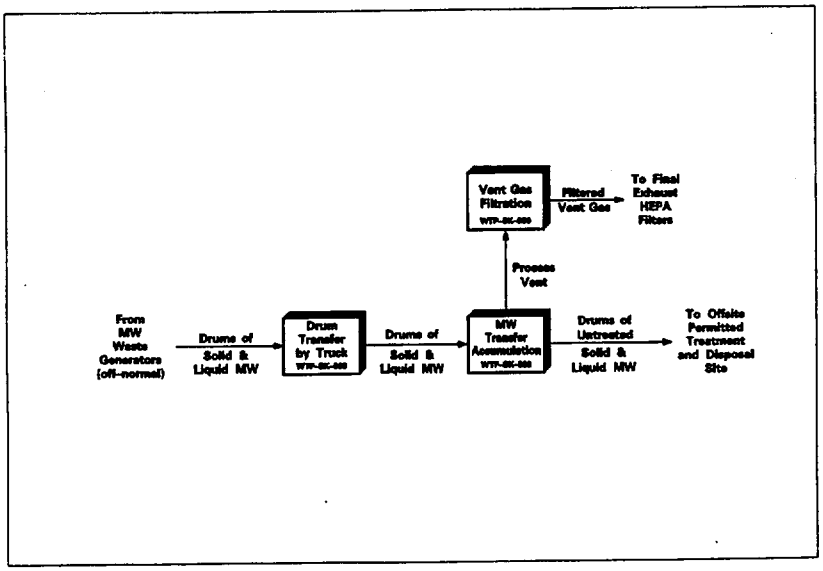

Figure 7.2.4–7. Mixed Waste Transfer System

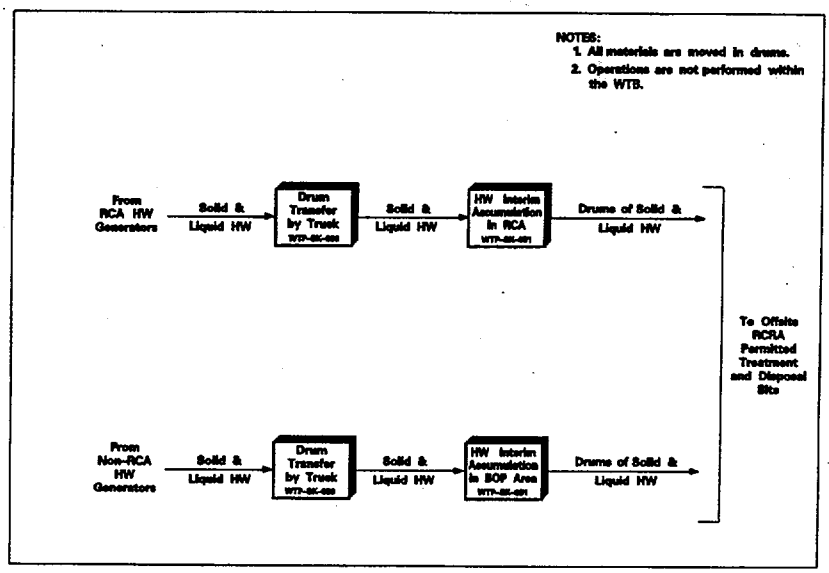

Figure 7.2.4-8. Hazardous Waste Transfer System

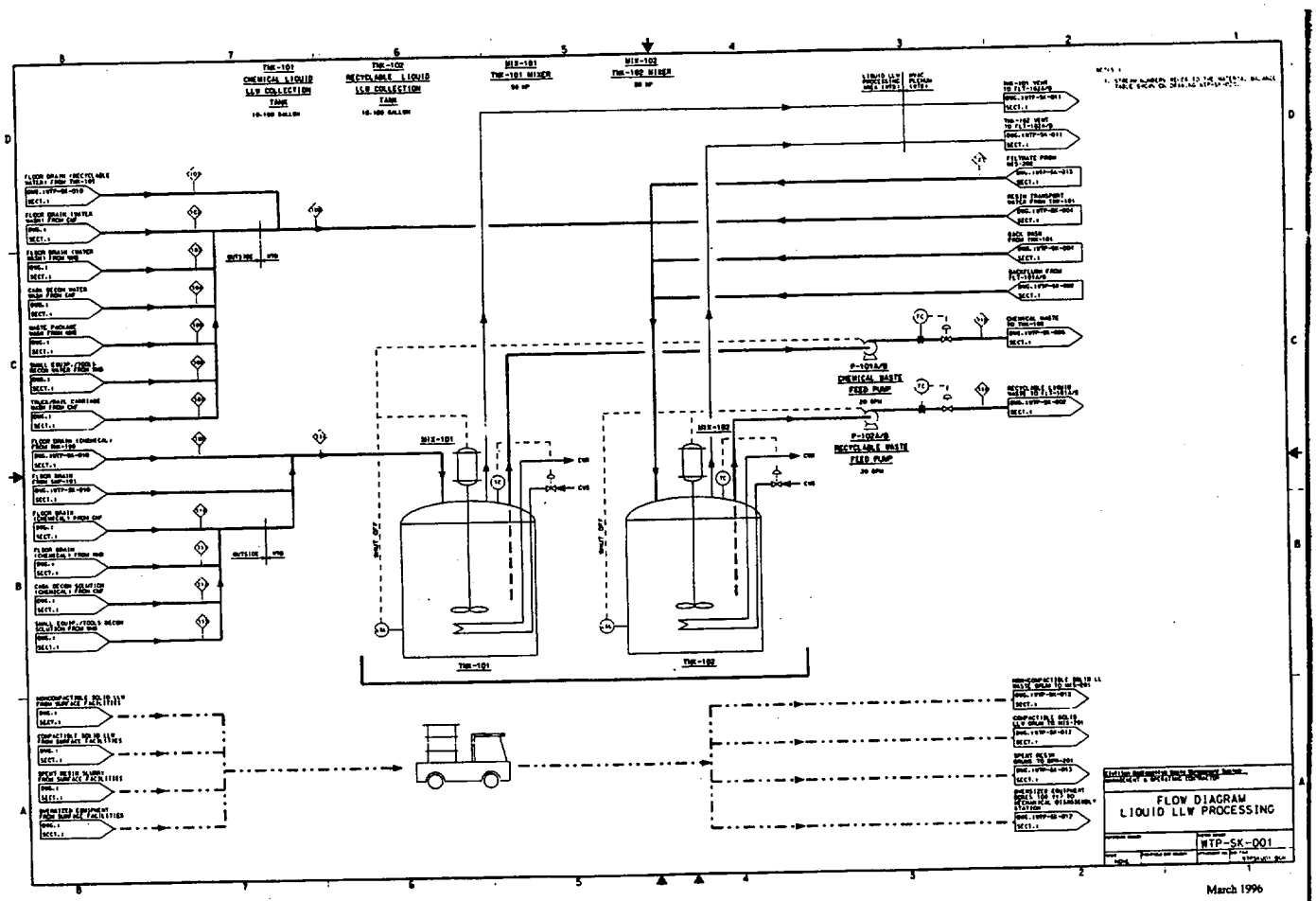
TNK-101
CHEMICAL LIQUID LLW COLLECTION TANK
10,100 GALLON
TNK-102
RECYCLABLE LIQUID LLW COLLECTION TANK
10,100 GALLON
MIX-101
TNK-101 MIXER
50 HP
MIX-102
TNK-102 MIXER
50 HP
P-1101A/B
CHEMICAL WASTE FEED PUMP
20 GPM
P-1102A/B
RECYCLABLE WASTE FEED PUMP
20 GPM
TNK-101
TNK-102
FLOW DIAGRAM
LIQUID LLW PROCESSING
WTP-SK-001

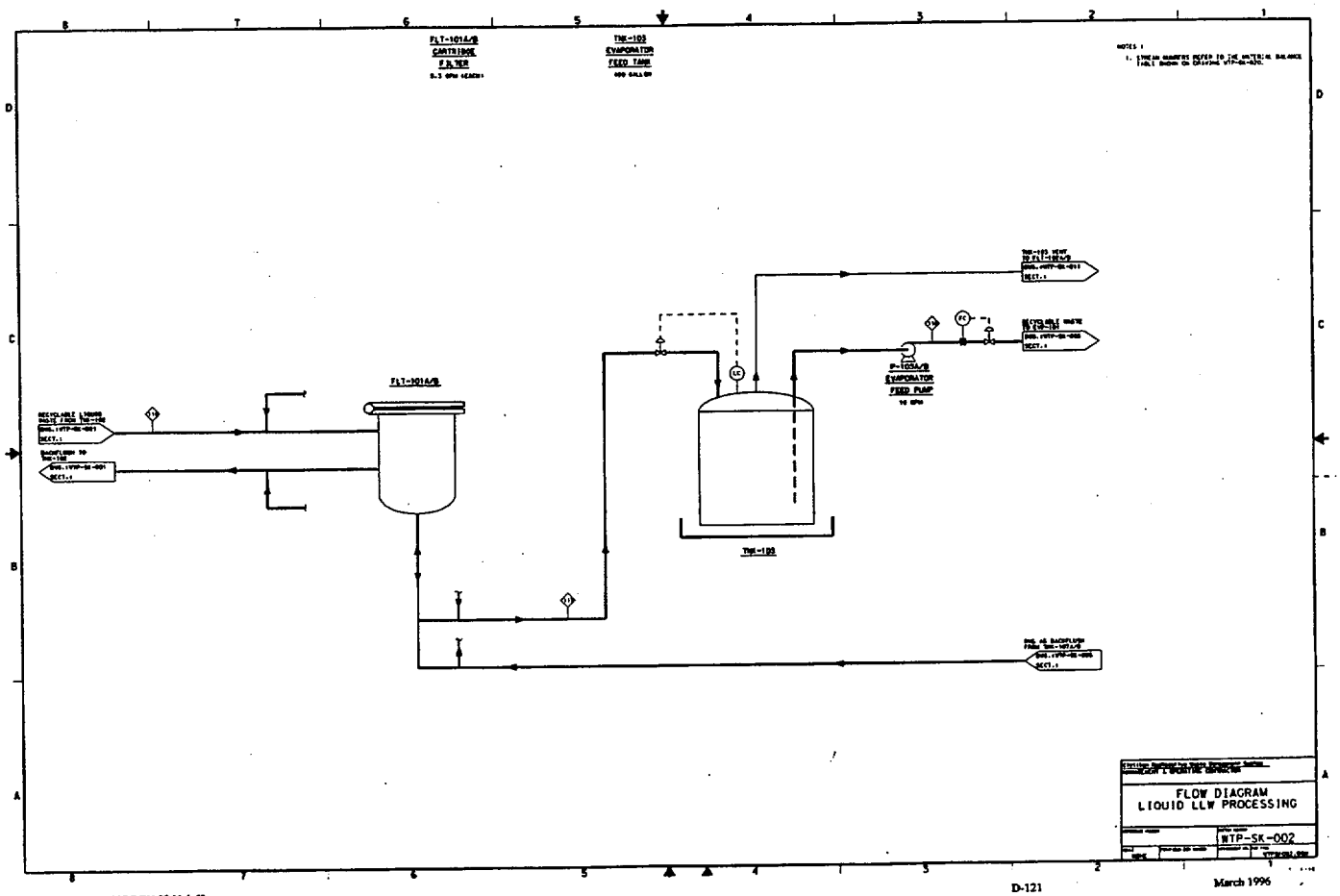
FLT-1014A/B
CARTRIDGE
FILTER
TNK-103
EVAPORATOR
FEED TANK
FLT-1014A/B
TNK-103
P-1034A/B
EVAPORATOR
FEED PUMP
FLOW DIAGRAM
LIQUID LLW PROCESSING
WTP-SK-002

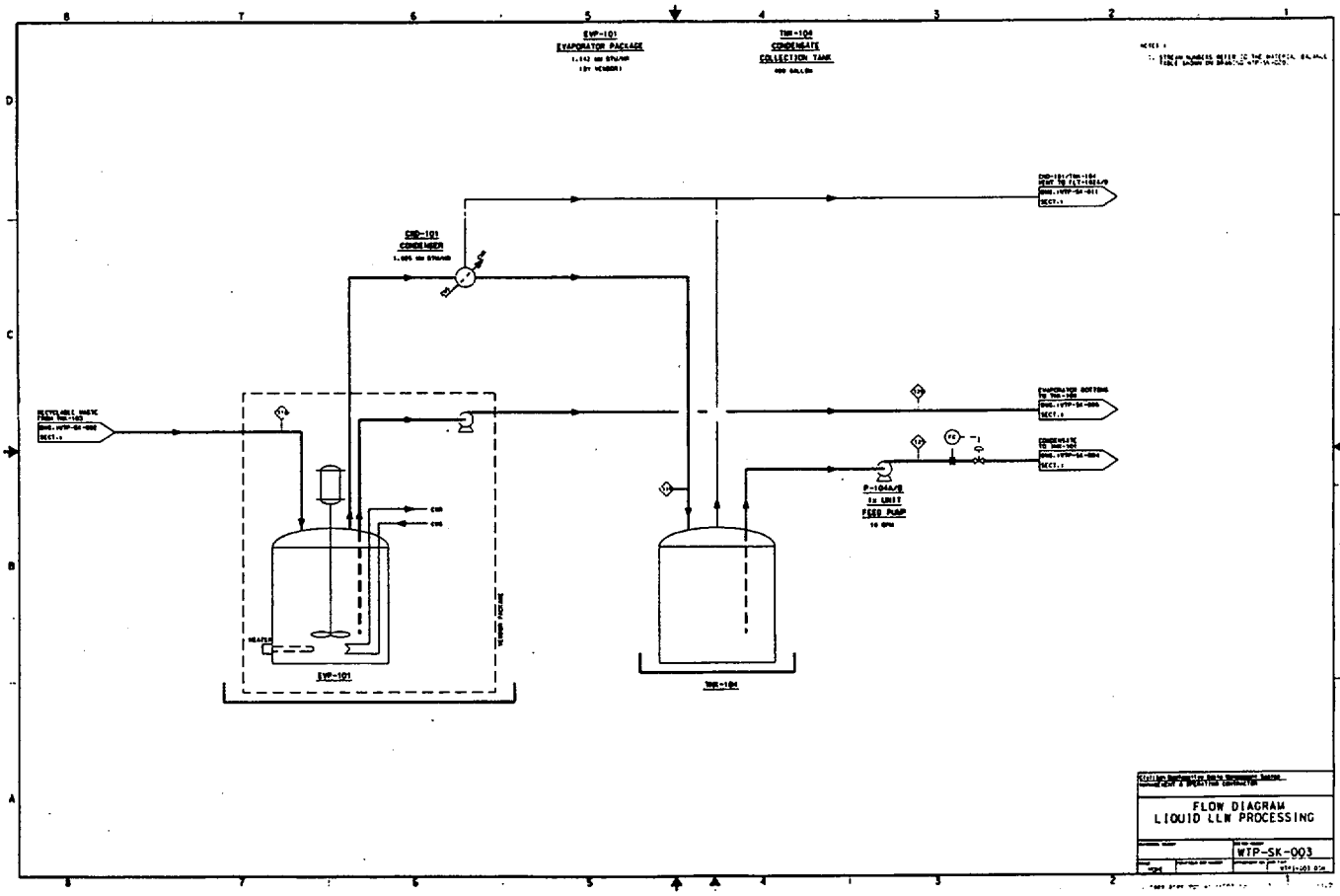
EVP-101
EVAPORATOR PACKAGE
TBK-104
CONDENSATE
COLLECTION TANK
CND-101
CONDENSER
HEATER
EVP-101
TBK-104
P-104A/B
1x UNIT
FEED PUMP
FLOW DIAGRAM
LIQUID LLW PROCESSING
WTP-SK-003

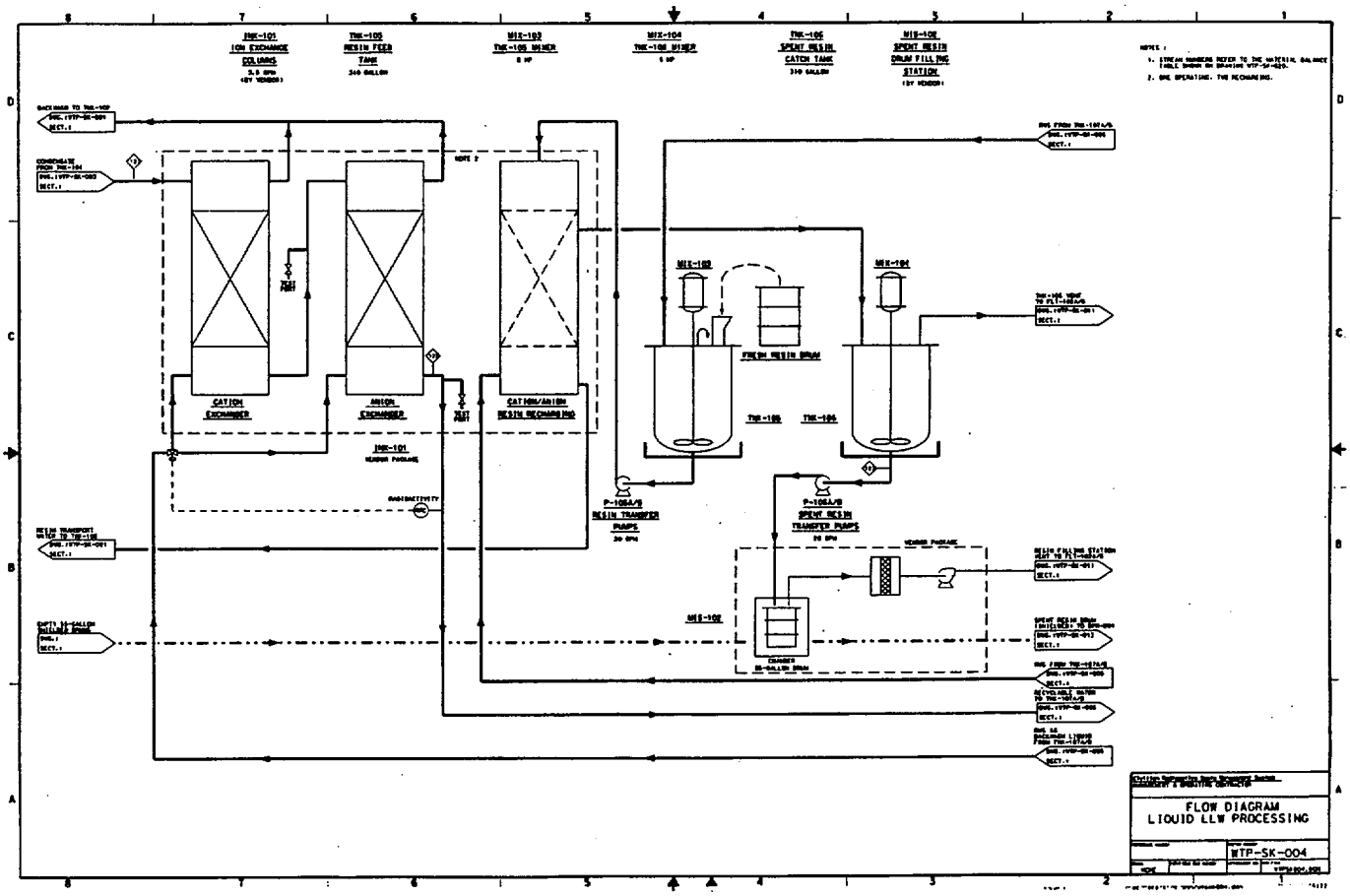
FLOW DIAGRAM
LIQUID LLW PROCESSING
WTP-SK-004
CATION EXCHANGER
ANION EXCHANGER
CATION/ANION RESIN RECHARGING
FRESH RESIN DRUM
RESIN TRANSFER PUMPS
SPENT RESIN TRANSFER PUMPS

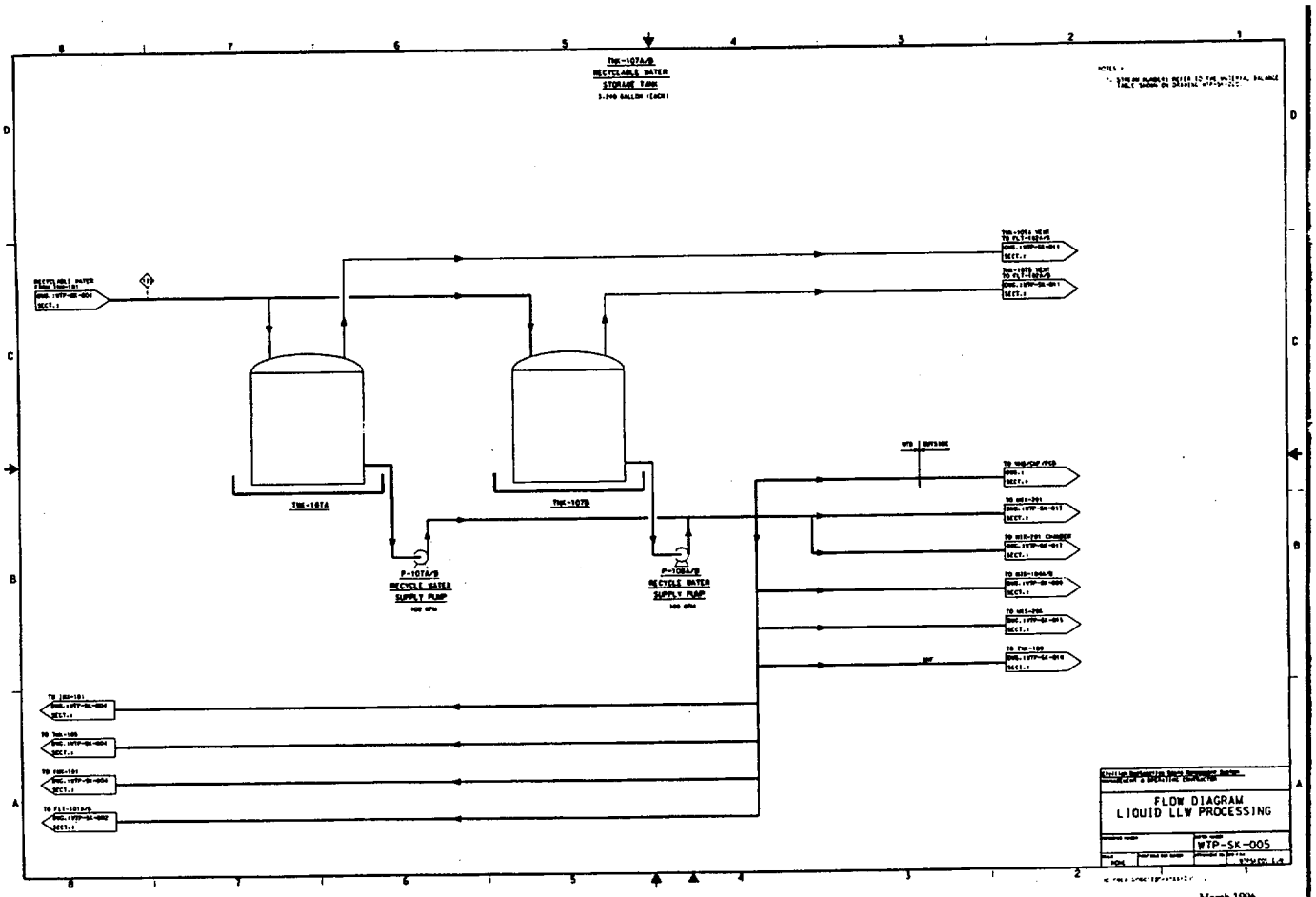
TNK-107A/B
RECYCLABLE WATER
STORAGE TANK
TNK-107A
TNK-107B
P-107A/B
RECYCLE WATER
SUPPLY PUMP
P-108A/B
RECYCLE WATER
SUPPLY PUMP
FLOW DIAGRAM
LIQUID LLW PROCESSING
WTP-SK-005

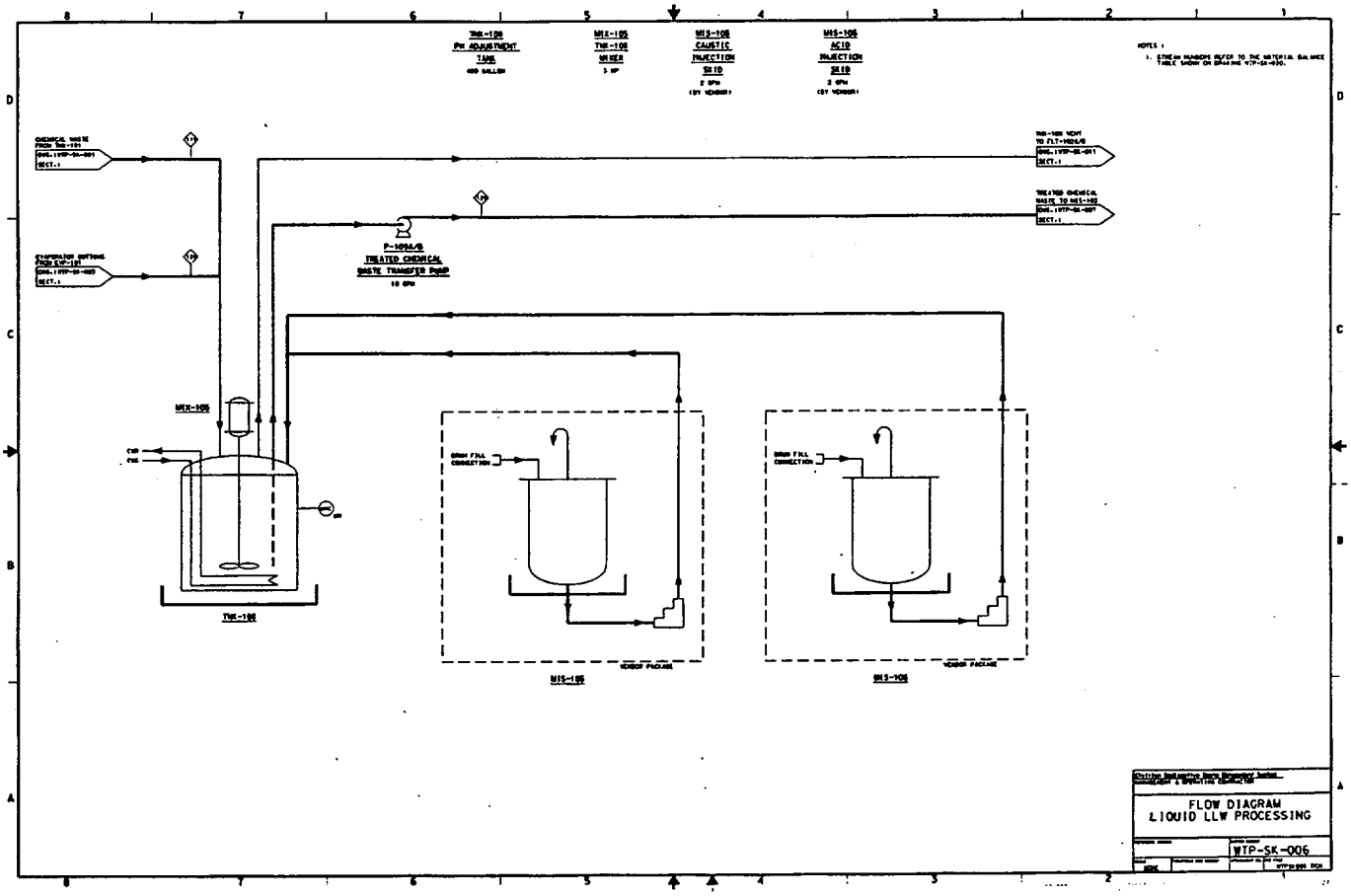
TNK-108
PH ADJUSTMENT
TANK
400 GALLON
MIX-105
TNK-108
MIXER
5 HP
MIS-108
CAUSTIC
INJECTION
SKID
2 GPH
(BY VENDOR)
MIS-106
ACID
INJECTION
SKID
2 GPH
(BY VENDOR)
NOTES :
1. STREAM NUMBERS REFER TO THE MATERIAL BALANCE TABLE SHOWN ON DRAWING WTP-SK-005.
CHEMICAL WASTE FROM TNK-101
ENGL.WTP-SK-001
SECT.1
EVAPORATOR BOTTOMS FROM EVP-101
ENGL.WTP-SK-003
SECT.1
TNK-108 VENT TO FLT-102A/B
ENGL.WTP-SK-001
SECT.1
TREATED CHEMICAL WASTE TO MIS-103
ENGL.WTP-SK-007
SECT.1
P-109A/B
TREATED CHEMICAL
WASTE TRANSFER PUMP
10 GPM
MIX-105
CW
CWR
TNK-108
DRUM FILL CONNECTION
VENDOR PACKAGE
MIS-105
DRUM FILL CONNECTION
VENDOR PACKAGE
MIS-106
FLOW DIAGRAM
LIQUID LLW PROCESSING
WTP-SK-006

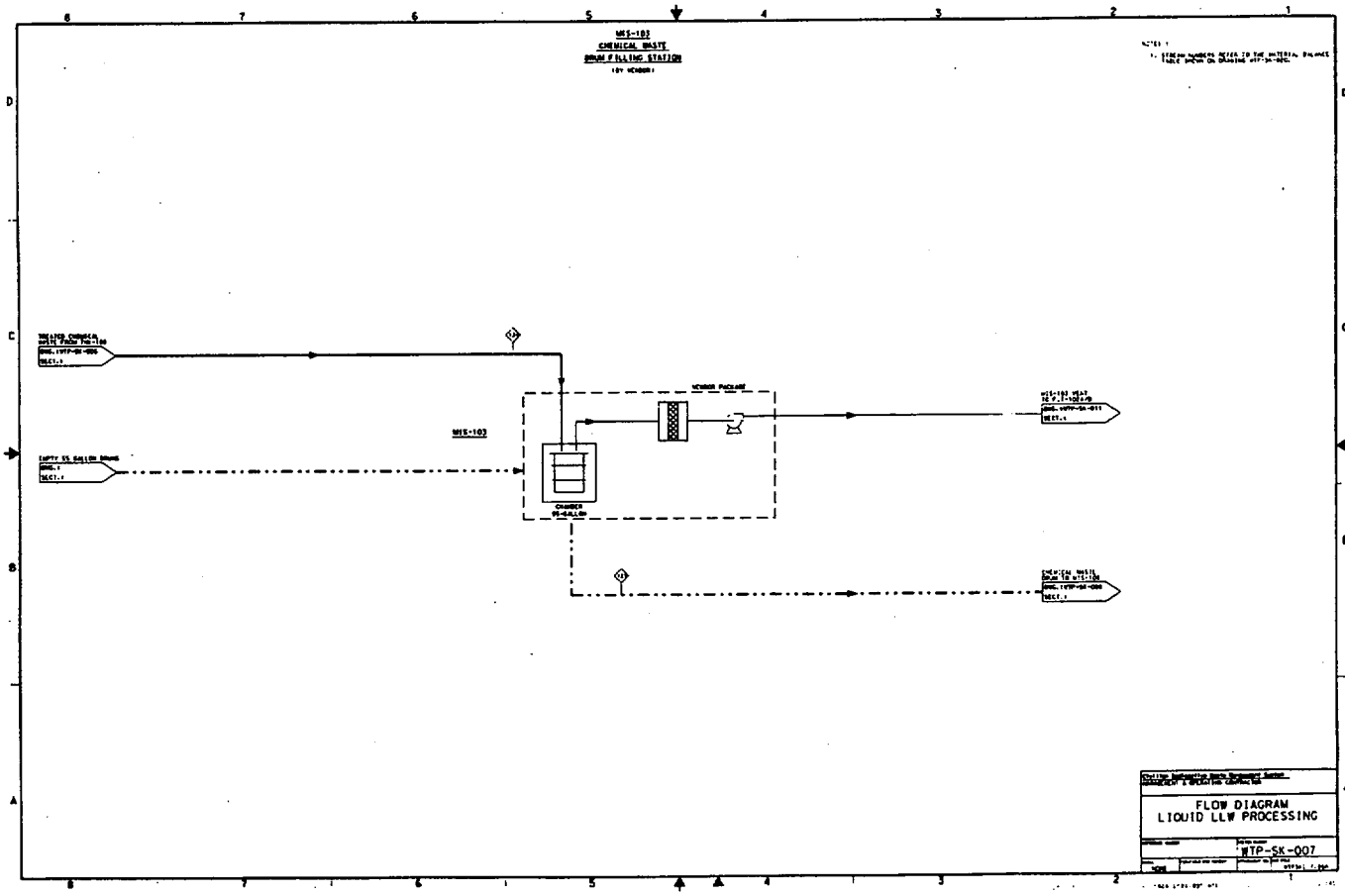
MIS-103
CHEMICAL WASTE
DRUM FILLING STATION
MIS-103
FLOW DIAGRAM
LIQUID LLW PROCESSING
WTP-SK-007

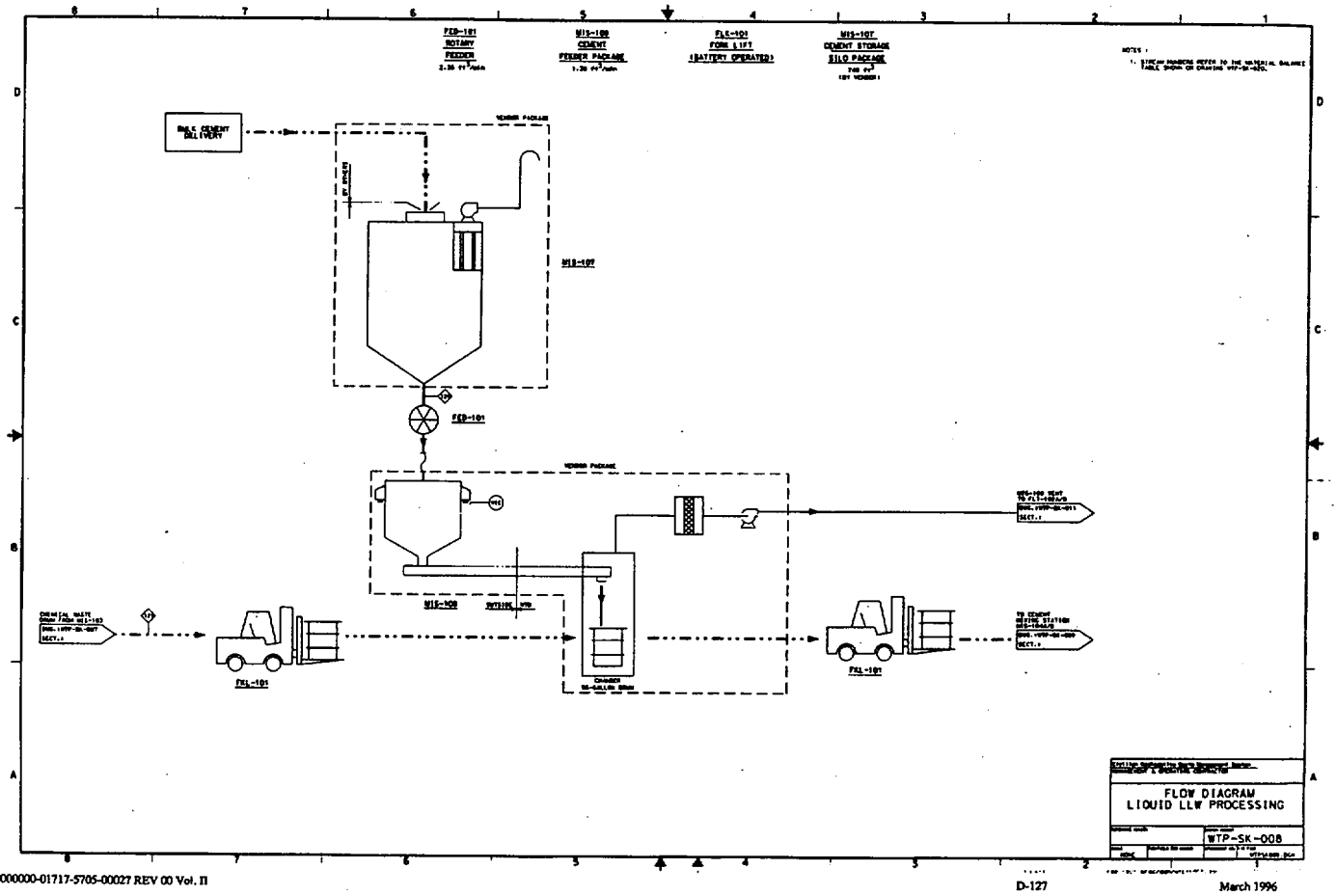
FED-101
ROTARY
FEEDER
MIS-100
CEMENT
FEEDER PACKAGE
FLE-101
FORK LIFT
(BATTERY OPERATED)
MIS-107
CEMENT STORAGE
SILO PACKAGE
BULK CEMENT
DELIVERY
MIS-107
FED-101
MIS-100
FXL-101
FXL-101
FLOW DIAGRAM
LIQUID LLW PROCESSING
WTP-SK-008

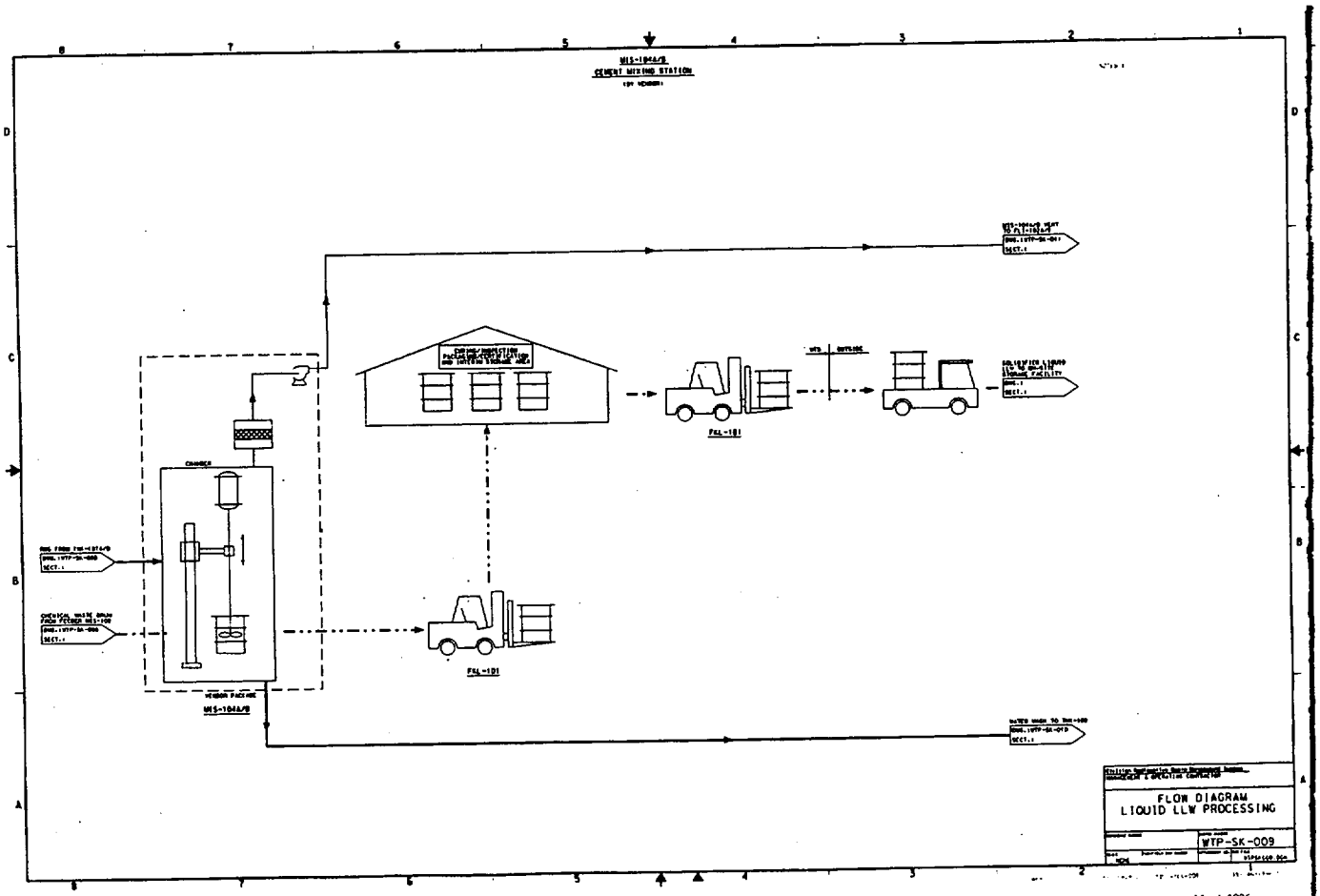
FLOW DIAGRAM
LIQUID LLW PROCESSING
WTP-SK-009

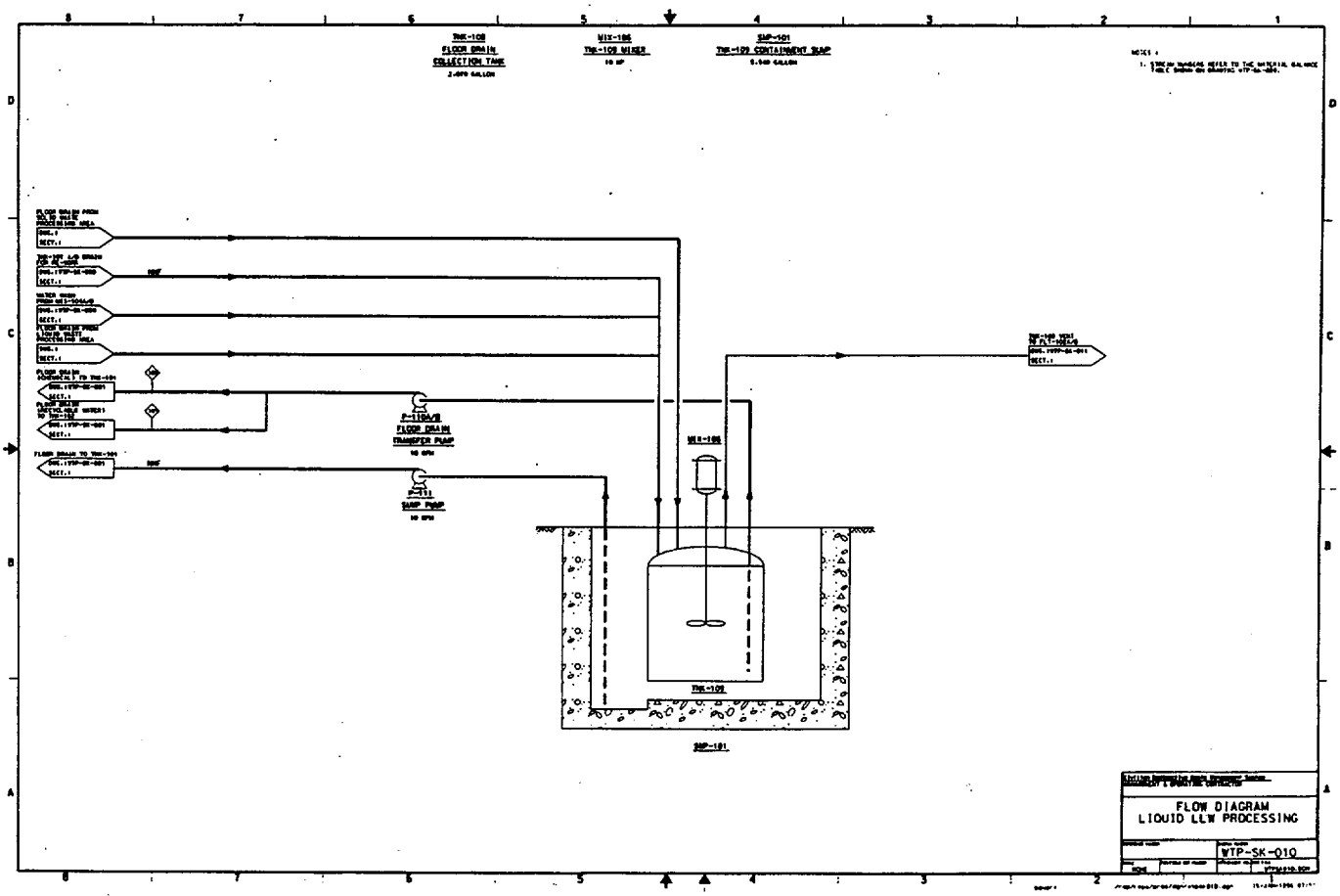
TNK-108
FLOOR DRAIN
COLLECTION TANK
MIX-106
TNK-109 MIXER
SMP-101
TNK-109 CONTAINMENT SUMP
P-110A/B
FLOOR DRAIN
TRANSFER PUMP
P-111
SUMP PUMP
MIX-106
TNK-109
SMP-101
FLOW DIAGRAM
LIQUID LLW PROCESSING
WTP-SK-010

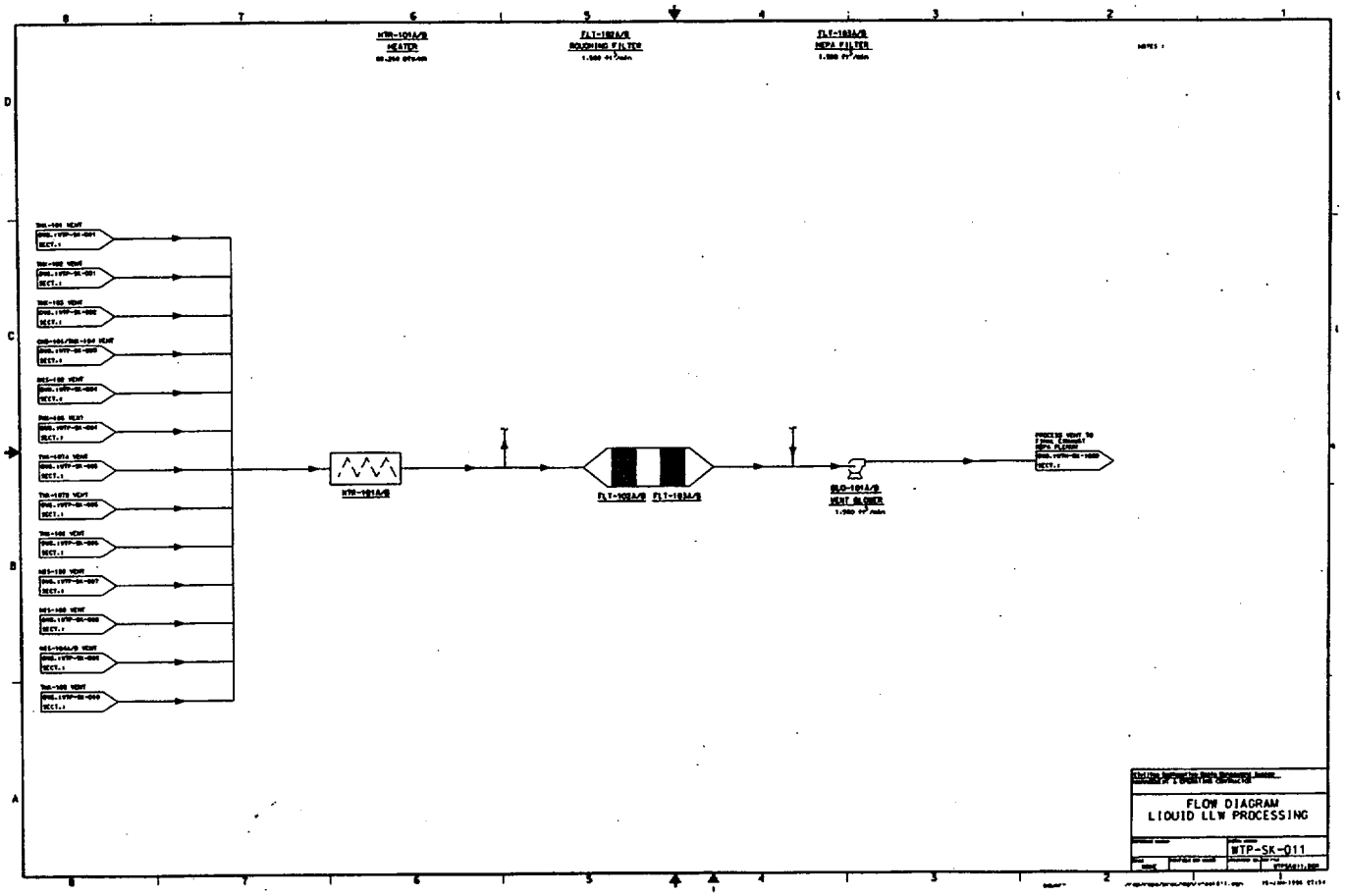
HTR-101A/B
HEATER
FLT-102A/B
BOLTING FILTER
FLT-103A/B
HEPA FILTER
HTR-101A/B
FLT-102A/B FLT-103A/B
BLO-101A/B
VENT BLOWER
FLOW DIAGRAM
LIQUID LLW PROCESSING
WTP-SK-011

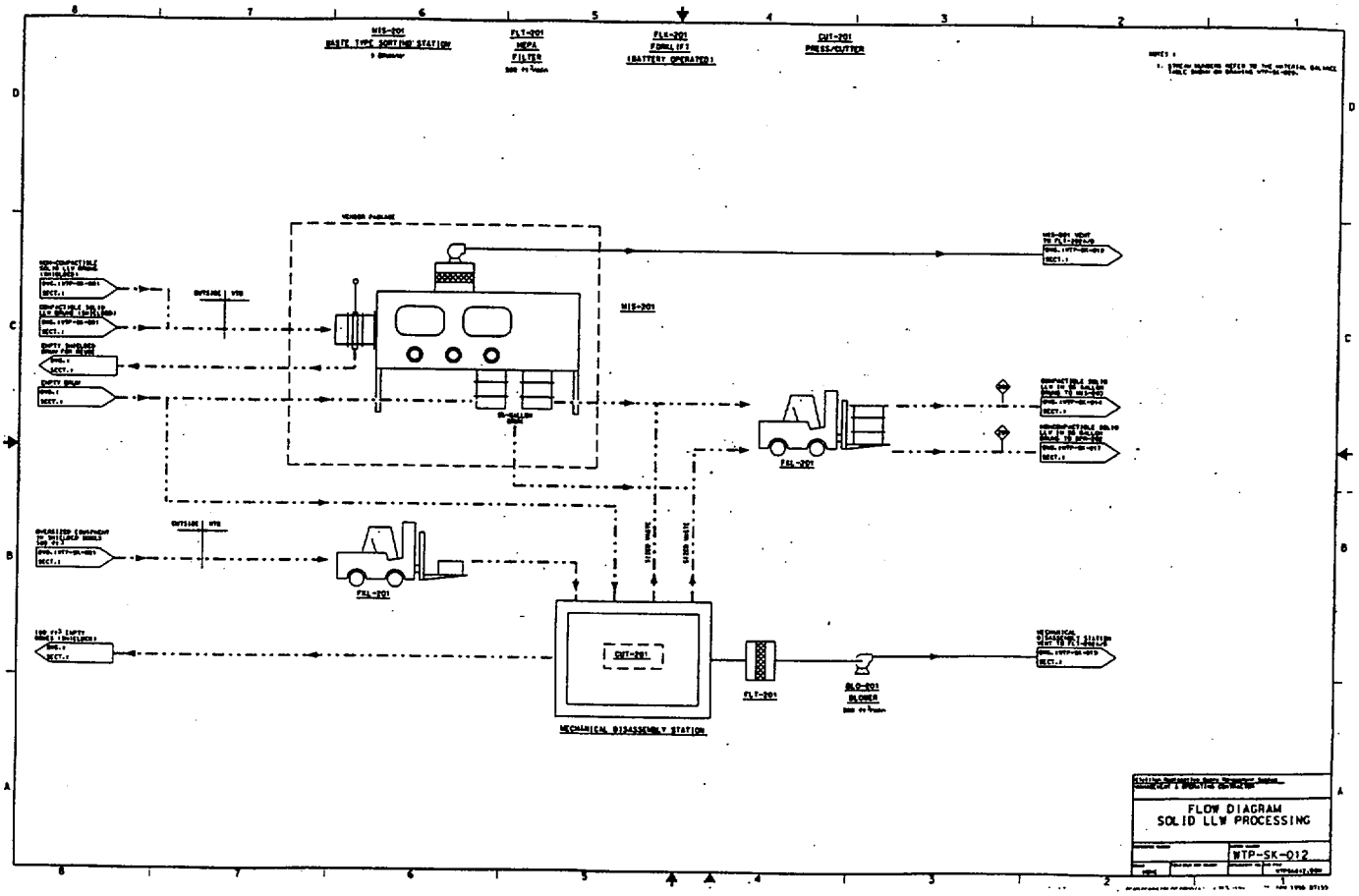
MIS-201
WASTE TYPE SORTING STATION
FLT-201
HEPA
FILTER
FLR-201
FORKLIFT
(BATTERY OPERATED)
CUT-201
PRESS/CUTTER
MIS-201
FKL-201
FKL-201
CUT-201
FLT-201
BLO-201
BLOWER
MECHANICAL DISASSEMBLY STATION
FLOW DIAGRAM
SOLID LLW PROCESSING
WTP-SK-012

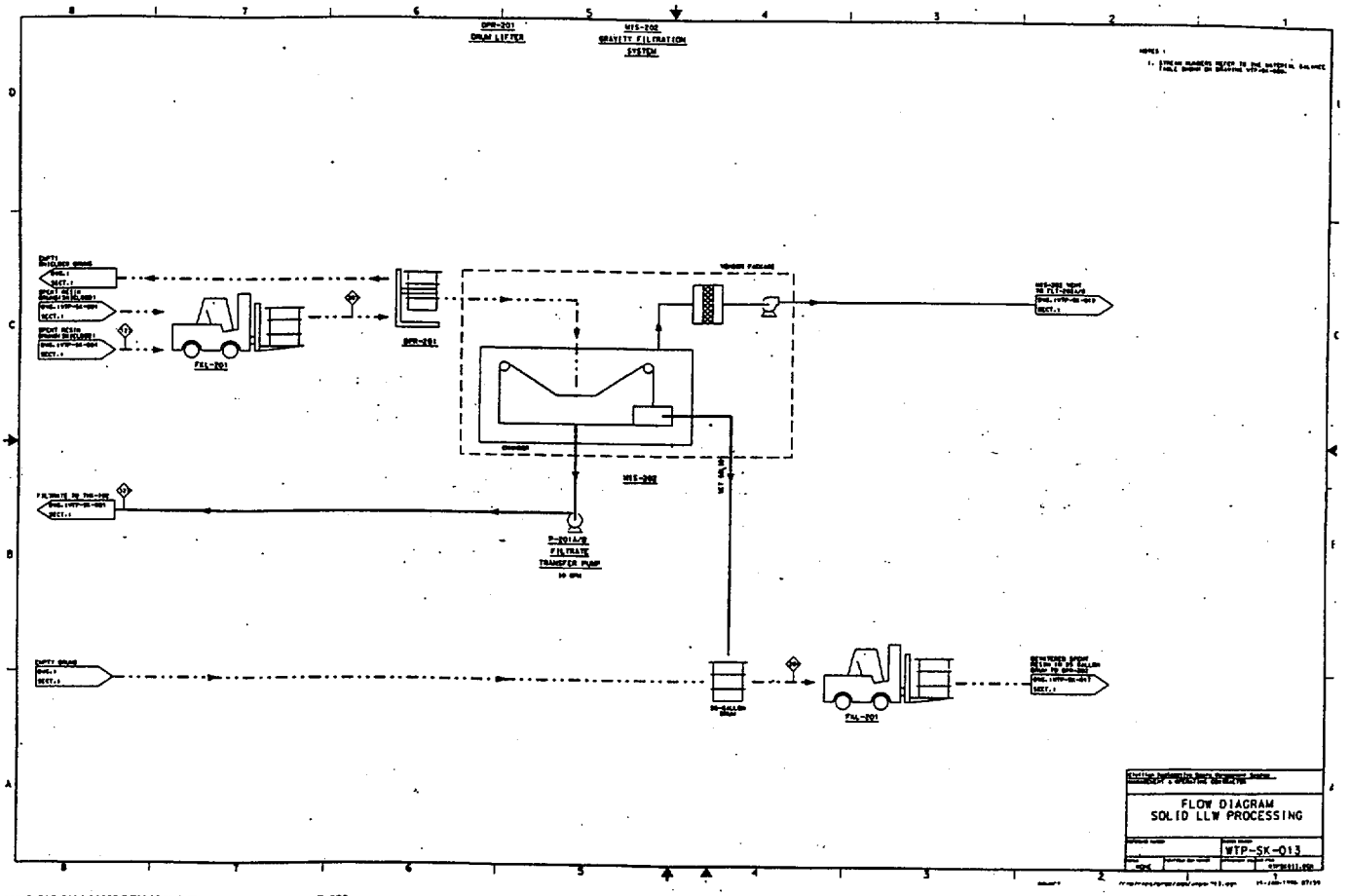
DRM-201
DRUM LIFTER
MIS-202
GRAVITY FILTRATION
SYSTEM
FKL-201
DRM-201
MIS-202
P-201A/B
FILTRATE
TRANSFER PUMP
FKL-201
FLOW DIAGRAM
SOLID LLW PROCESSING
WTP-SK-013

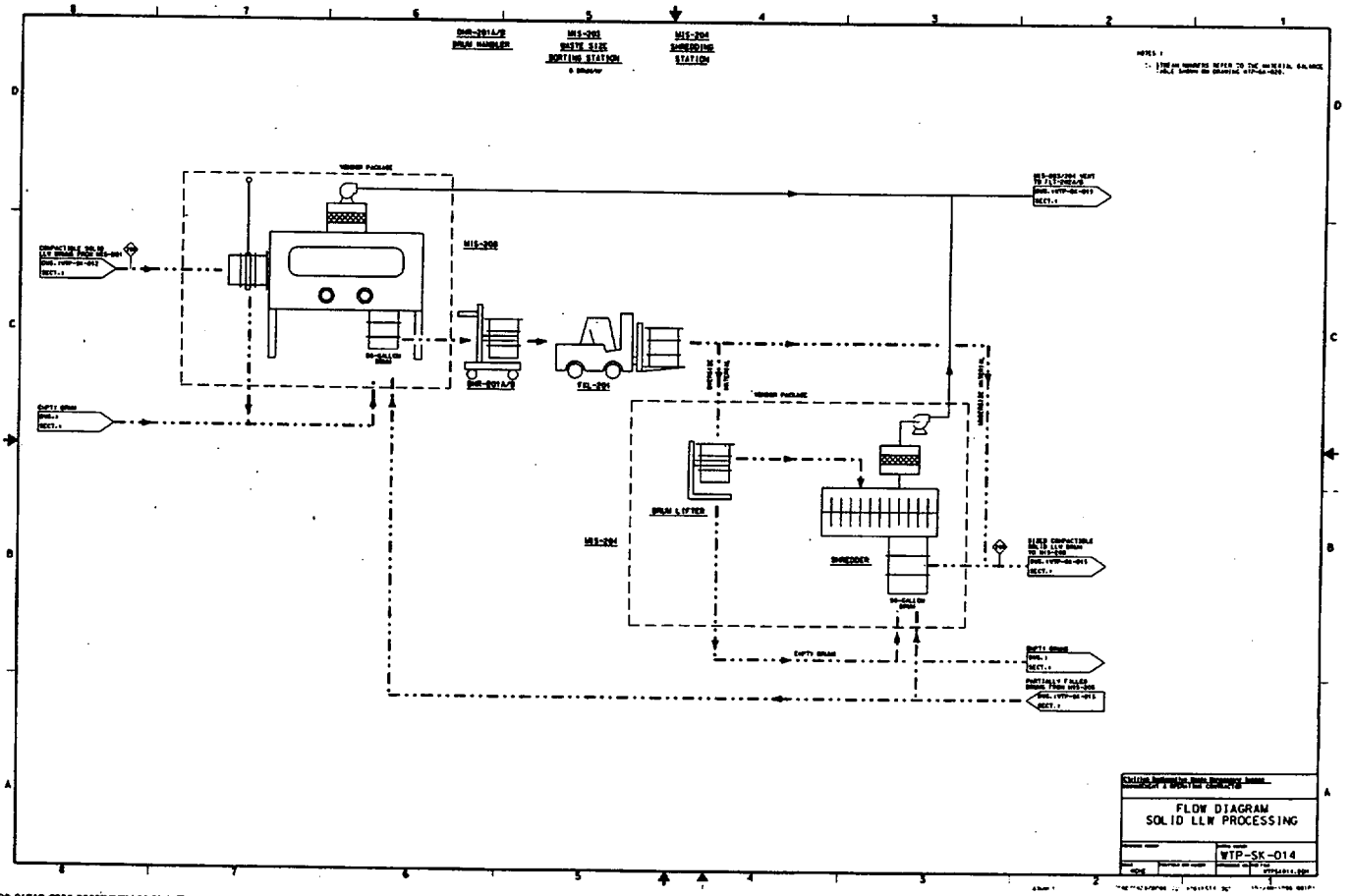
DMR-2011A/B
DRUM HANDLER
MIS-201
WASTE SIZE
SORTING STATION
MIS-204
SHREDDING
STATION
MIS-200
DMR-2011A/B
FEL-201
MIS-204
DRUM LIFTER
SHREDDER
FLOW DIAGRAM
SOLID LLW PROCESSING
WTP-SK-014

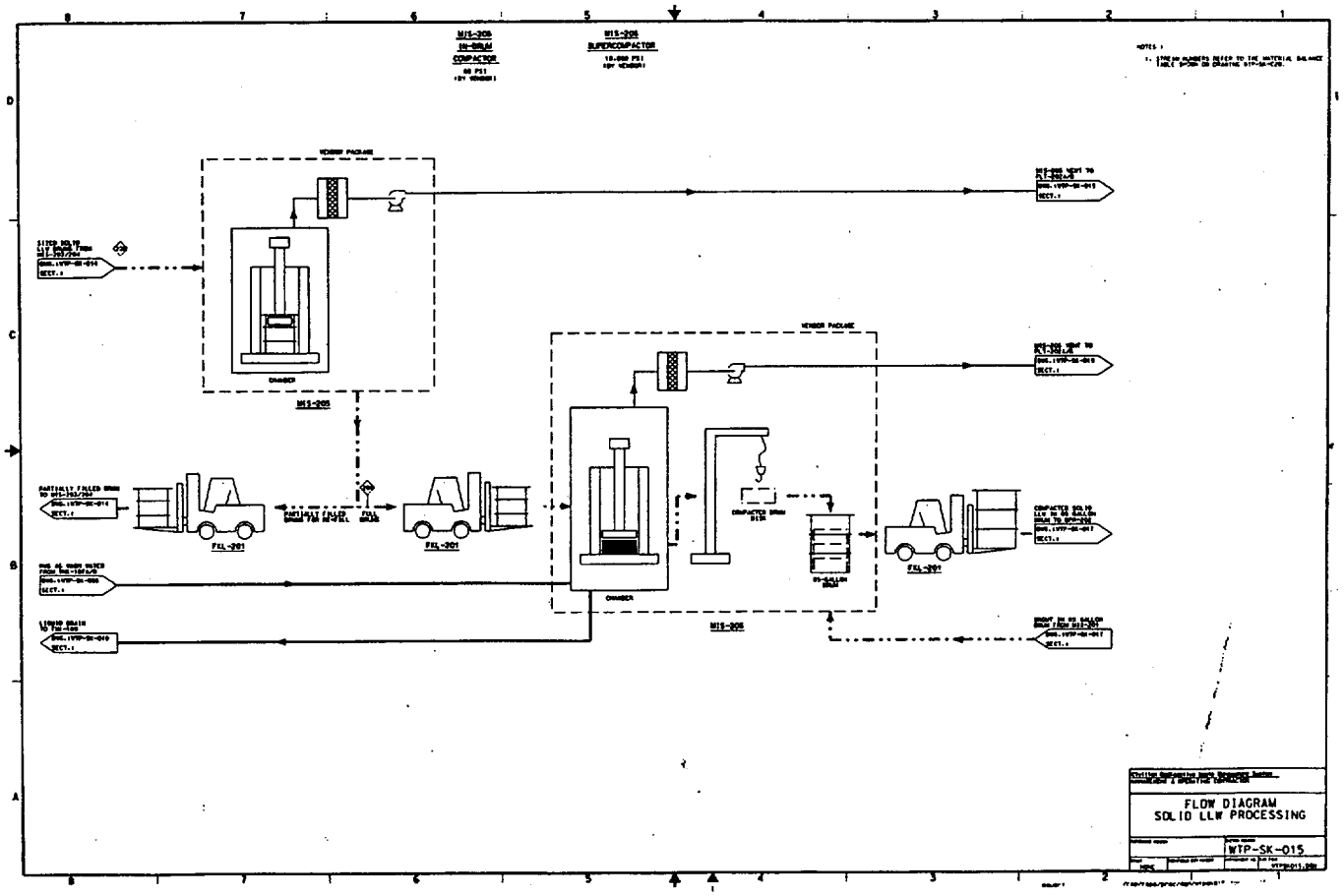
FLOW DIAGRAM
SOLID LLW PROCESSING
WTP-SK-015

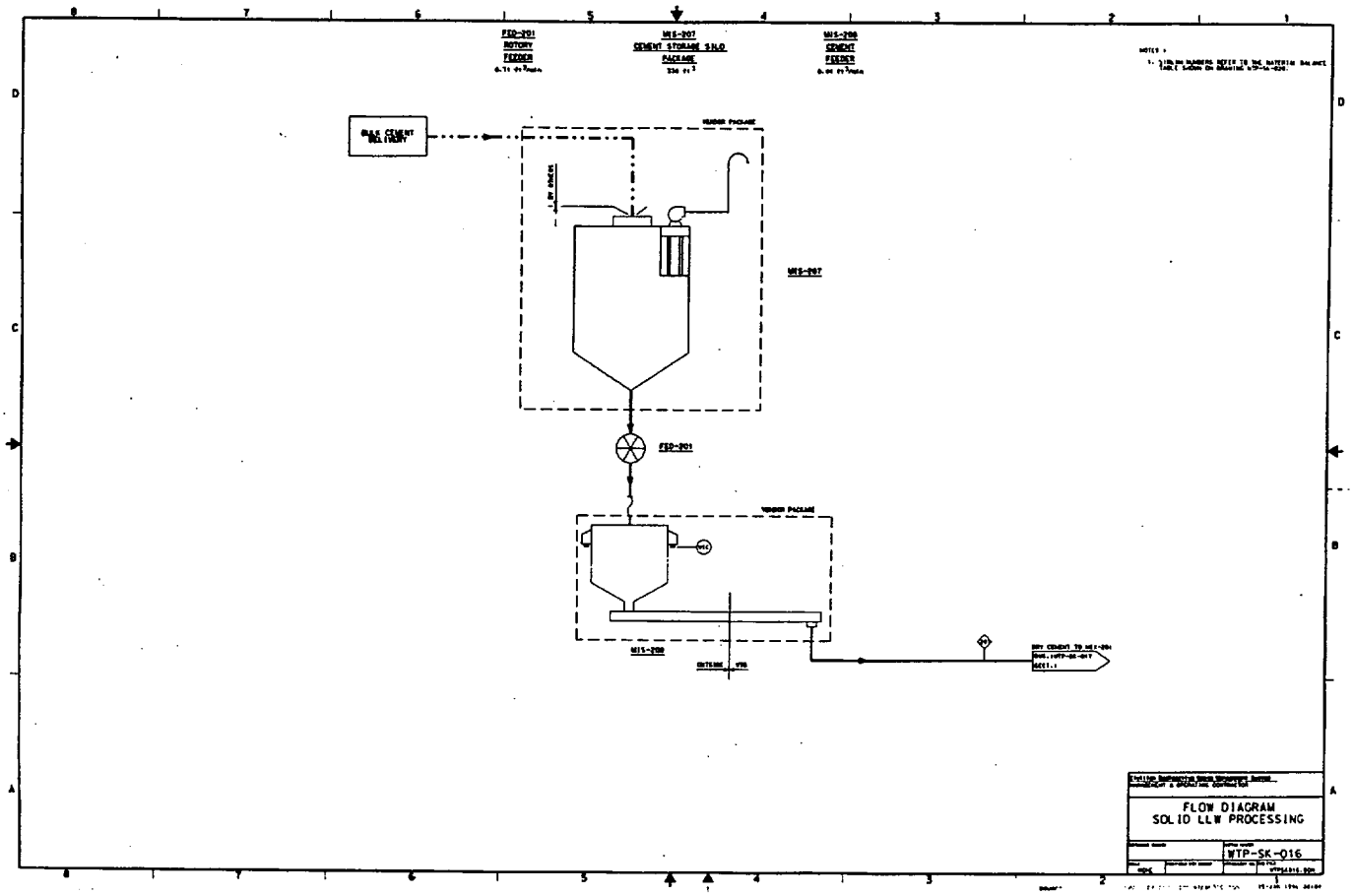
FEED-201
ROTORY
FEEDER
MIS-207
CEMENT STORAGE SILO
PACKAGE
MIS-208
CEMENT
FEEDER
NOTES :
BULK CEMENT
DELIVERY
VENDOR PACKAGE
AIR BLOWER
MIS-207
FEED-201
VENDOR PACKAGE
MIS-208
DRY CEMENT TO MIS-204
FLOW DIAGRAM
SOLID LLW PROCESSING
WTP-SK-016

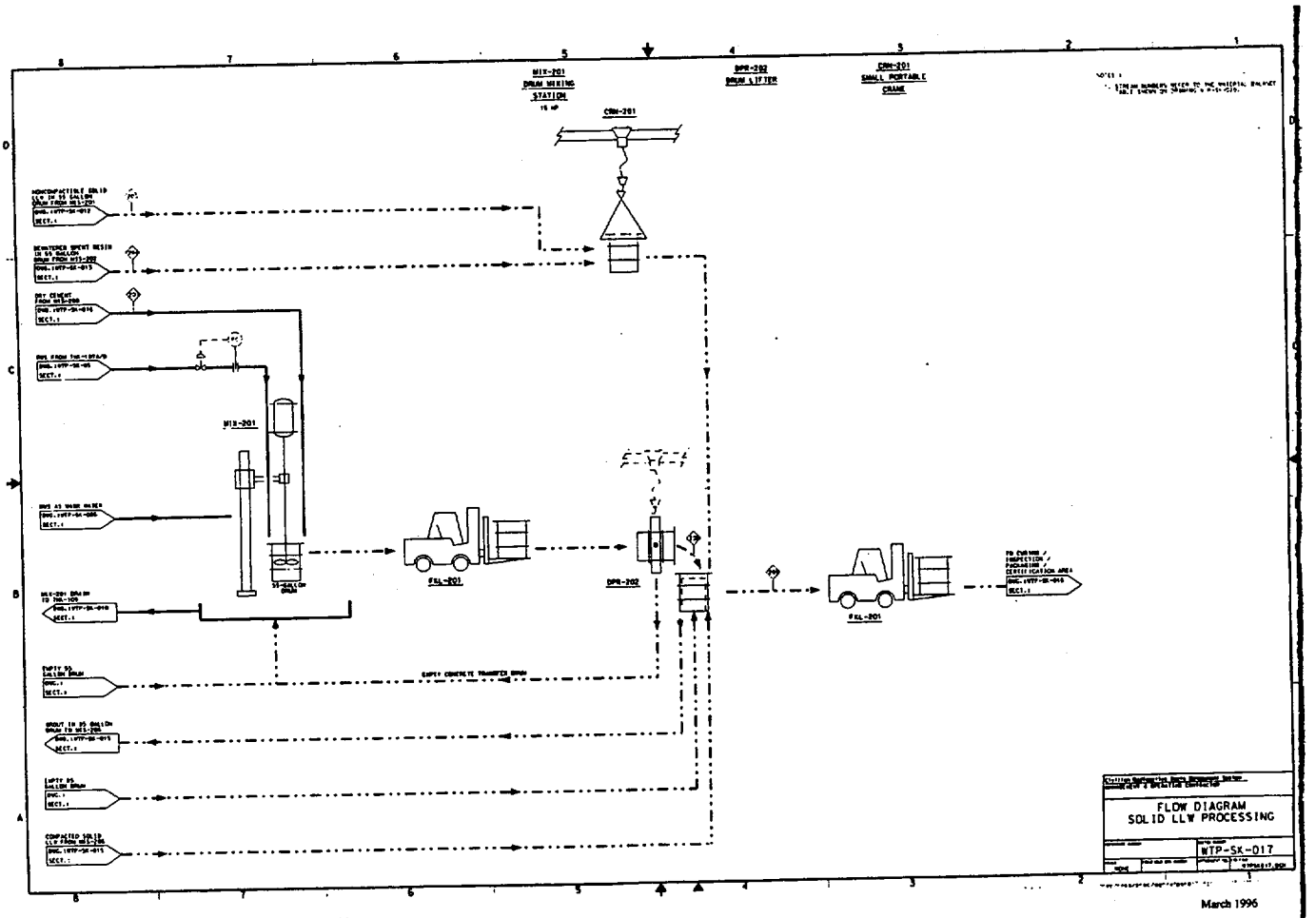
MIX-201
DRUM MIXING
STATION
DPR-202
DRUM LIFTER
CRN-201
SMALL PORTABLE
CRANE
CRN-201
MIX-201
FKL-201
DPR-202
FKL-201
FLOW DIAGRAM
SOLID LLW PROCESSING
WTP-SK-017

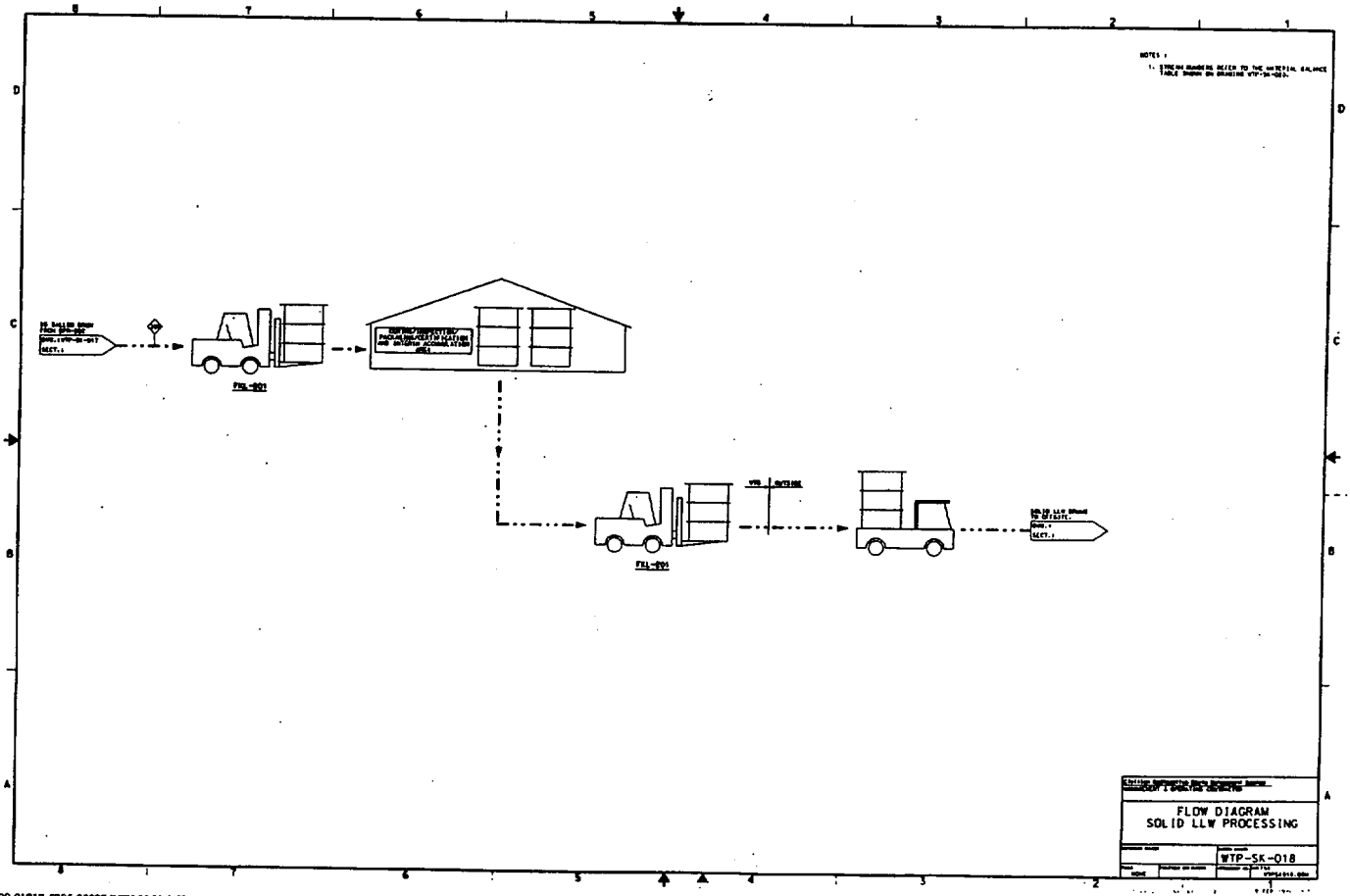
FLOW DIAGRAM
SOLID LLW PROCESSING
WTP-SK-018

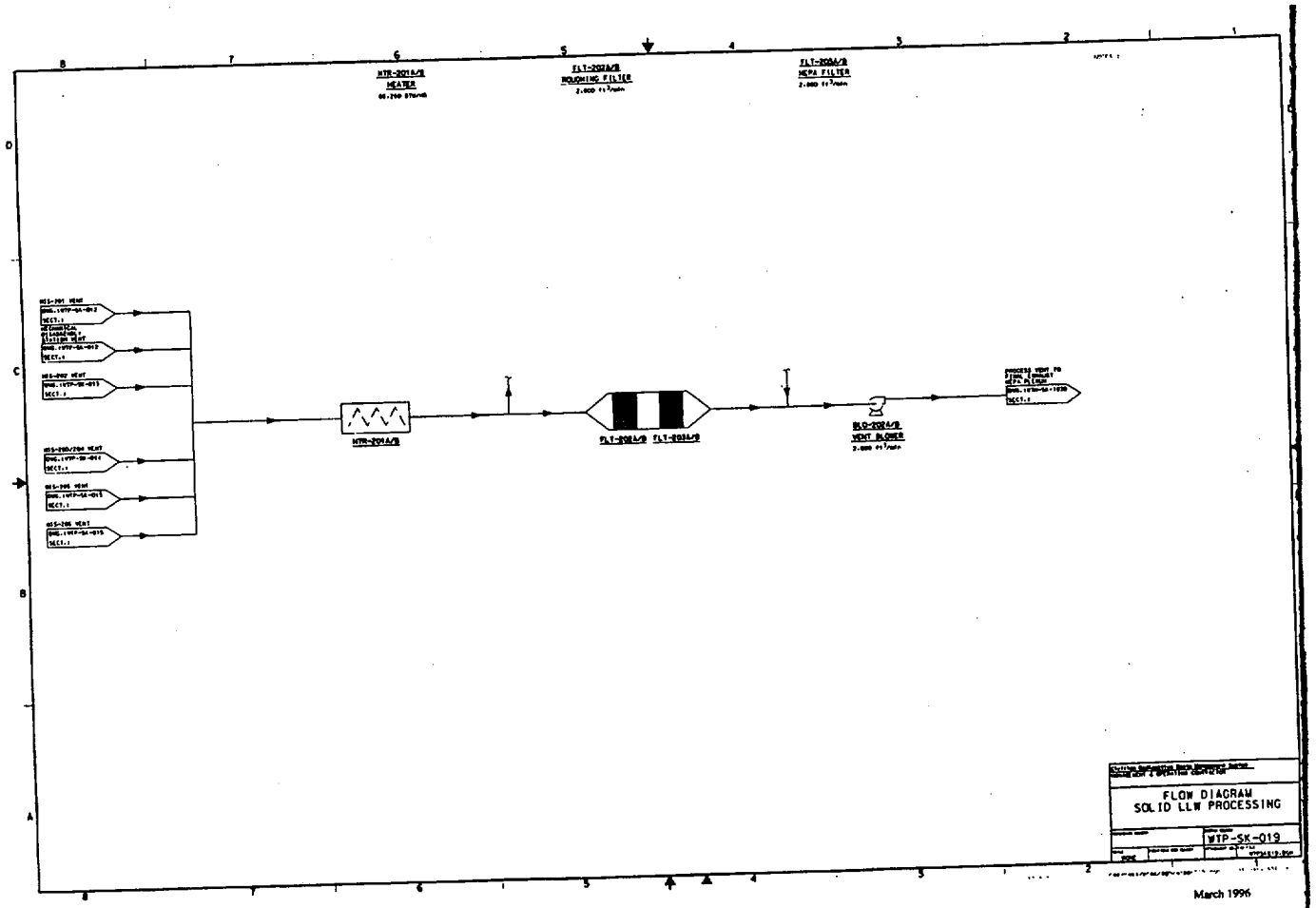
HTR-2014A/B
HEATER
FLT-2021A/B
ROUGHING FILTER
FLT-2026A/B
HEPA FILTER
HTR-2014A/B
FLT-2021A/B FLT-2026A/B
BLO-2024A/B
VENT BLOWER
FLOW DIAGRAM
SOLID LLW PROCESSING
WTP-SK-019

March 1996

LIQUID LLW PROCESSING

STREAM NO.	101	102	103	104	105	106	107	108	109	110	111	112	113	114
DESCRIPTION	FLOOR DRAIN (RECYCLABLE) FROM THK-109	FLOOR DRAIN (RECYCLABLE) FROM CMF	FLOOR DRAIN (RECYCLABLE) FROM WHB	CASK DECON. WATER WASH FROM CMF	WASTE PACKAGE WASH FROM WHB	SMALL EQUIP./ TOOL DECON. WATER FROM WHB	TRUCK/RAIL CARRIAGE WASH FROM CMF	TOTAL RECYCLABLE LIQUID LLW	FLOOR DRAIN (CHEMICAL) FROM THK-109	FLOOR DRAIN (CHEMICAL) FROM CMF	FLOOR DRAIN (CHEMICAL) FROM WHB	CASK DECON. CHEMICAL WATER WASH FROM CMF	SMALL EQUIP./ TOOLS DECON. SOLUTION FROM WHB	TOTAL CHEMICAL LIQUID LLW
GALLONS/YEAR	5.200	21.100	30.300	12.700	1.600	3.100	9.100	75.100	3.400	14.100	20.200	21.500	6.200	65.400
GALLONS/BATCH	—	—	—	—	—	—	—	—	—	—	—	—	—	—
DRUMS/YEAR (55 GALLON)	—	—	—	—	—	—	—	—	—	—	—	—	—	—
lb/DRUM	—	—	—	—	—	—	—	—	—	—	—	—	—	—
BULK DENSITY, lb/ft^3	66.5	66.5	66.5	66.5	66.5	66.5	66.5	66.5	64	64	64	64	64	64
PRESSURE, PSIG	TBD	TBD	TBD	TBD	TBD	TBD	TBD	TBD	TBD	TBD	TBD	TBD	TBD	TBD
TEMPERATURE, °F	AMBIENT	AMBIENT	AMBIENT	AMBIENT	AMBIENT	AMBIENT	AMBIENT	AMBIENT	AMBIENT	AMBIENT	AMBIENT	AMBIENT	AMBIENT	AMBIENT
GPM	—	—	—	—	—	—	—	—	—	—	—	—	—	—

STREAM NO.	115	116	117	118	119	120	121	122	123	124	125	126	127
DESCRIPTION	CHEMICAL WASTE TO THK-108	RECYCLABLE LIQUID WASTE TO FLT-101A/B	FILTRATE FROM FLT-101A/B	EVAPORATOR FEED TO EVP-101	EVAPORATOR OVERHEAD CONDENSATE	EVAPORATOR BOTTOMS	ION EXCHANGE FEED	RECYCLABLE WATER TO THK-101A/B	SPENT RESIN SLURRY	CHEMICAL WASTE FROM THK-108	DRUM CONTAINING CHEMICAL WASTE	CEMENT ADDITION TO DRUM	WATER FROM SPENT RESIN DEWATERING MIS-202
GALLONS/YEAR	65.400	75.100	—	—	—	—	—	—	1.728	—	—	—	7.011
GALLONS/BATCH	278	320	318	318	303	26	303	303	144	304	—	—	—
DRUMS/YEAR (55 GALLON)	—	—	—	—	—	—	—	—	—	—	4.370	4.370	—
lb/DRUM	—	—	—	—	—	—	—	—	—	—	143	651	—
BULK DENSITY, lb/ft^3	64	66.5	65.3	65.3	62.4	80.9	62.4	62.4	80	65.2	65.2	94	62.4
PRESSURE, PSIG	TBD	TBD	TBD	TBD	TBD	TBD	TBD	TBD	TBD	TBD	ATM	ATM	TBD
TEMPERATURE, °F	AMBIENT	AMBIENT	AMBIENT	AMBIENT	107	176	107	107	AMBIENT	AMBIENT	AMBIENT	AMBIENT	AMBIENT
GPM	9.3	5.3	5.3	1.6	1.4	5	1.7	1.7	5	3.4	—	—	5

SOLID LLW PROCESSING

STREAM NO.	201	202	203	204	205	206	207	208	209
DESCRIPTION	NONCOMPACTIBLE SOLID LLW GENERATED	COMPACTIBLE SOLID LLW GENERATED	SPENT RESIN DRUMS	DEWATERED SPENT RESIN DRUMS	COMPACTIBLE WASTE TO COMPACTOR	COMPACTED WASTE TO SUPERCOMPACTOR	DRY CEMENT FEED	200 LITER DRUM IN 500 LITER DRUM	500 LITER DRUM FOR ON-SITE DISPOSAL
lb/YEAR	1.347.960	267.900	77.268	13.000	267.900	267.900	824.041	—	—
ft^3/YEAR	8.986	26.790	1.545	.400	24.558	6.698	8.766	—	—
DRUMS/YEAR (55 GALLON)	1.528	4.555	263	—	4.175	1.140	—	2.006	—
DRUMS/YEAR (85 GALLON)	—	—	—	—	—	—	—	—	2.005
BULK DENSITY, lb/ft^3	150	10	50	32.5	10.9	40	94	—	—
PRESSURE, PSIG	ATM	ATM	ATM	ATM	ATM	ATM	ATM	ATM	ATM
TEMPERATURE, °F	AMBIENT	AMBIENT	AMBIENT	AMBIENT	AMBIENT	AMBIENT	AMBIENT	AMBIENT	AMBIENT

LIQUID & SOLID LLW PROCESSING MATERIAL BALANCE

WTP-SK-020

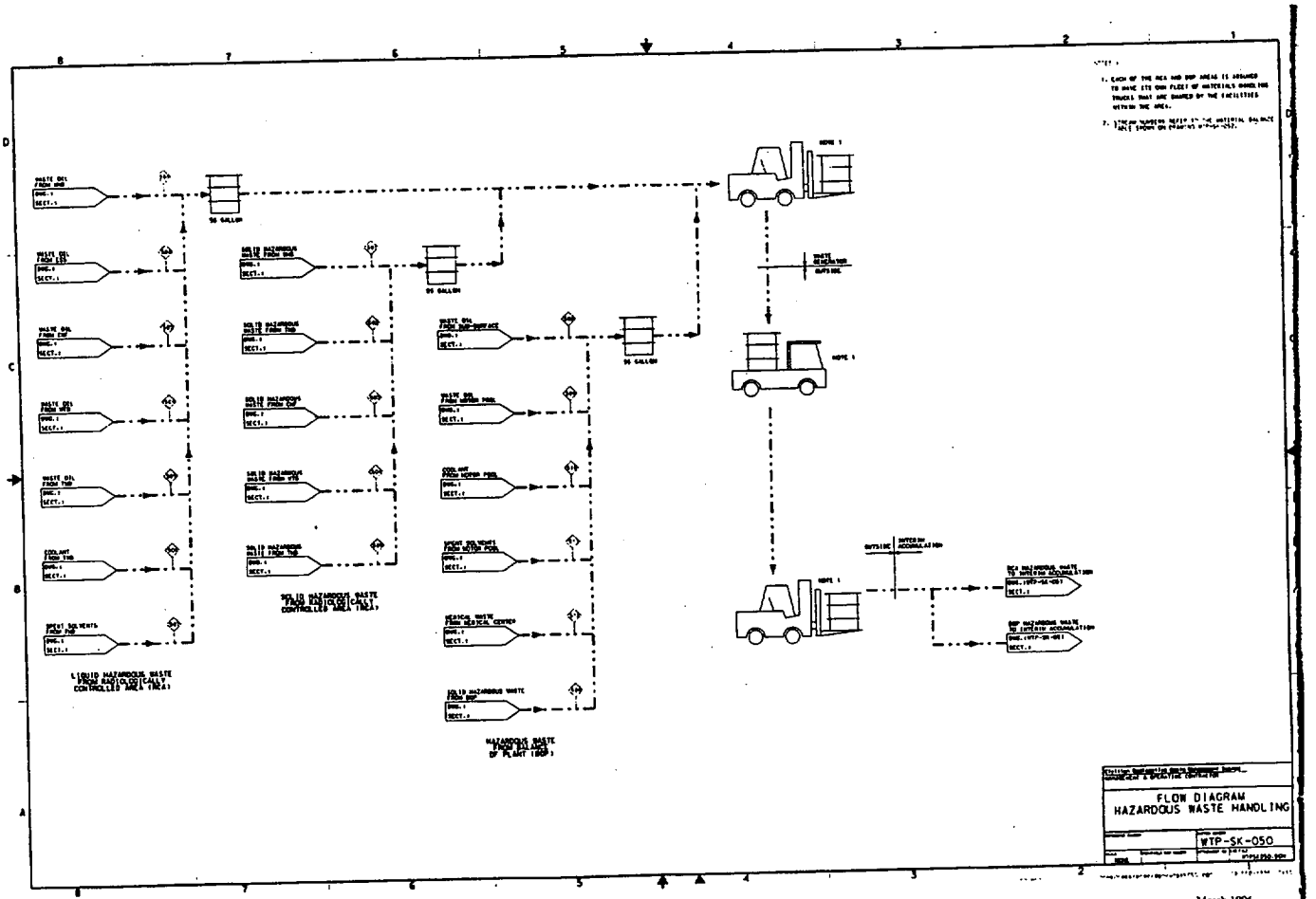
FLOW DIAGRAM
HAZARDOUS WASTE HANDLING
WTP-SK-050
55 GALLON
NOTE 1

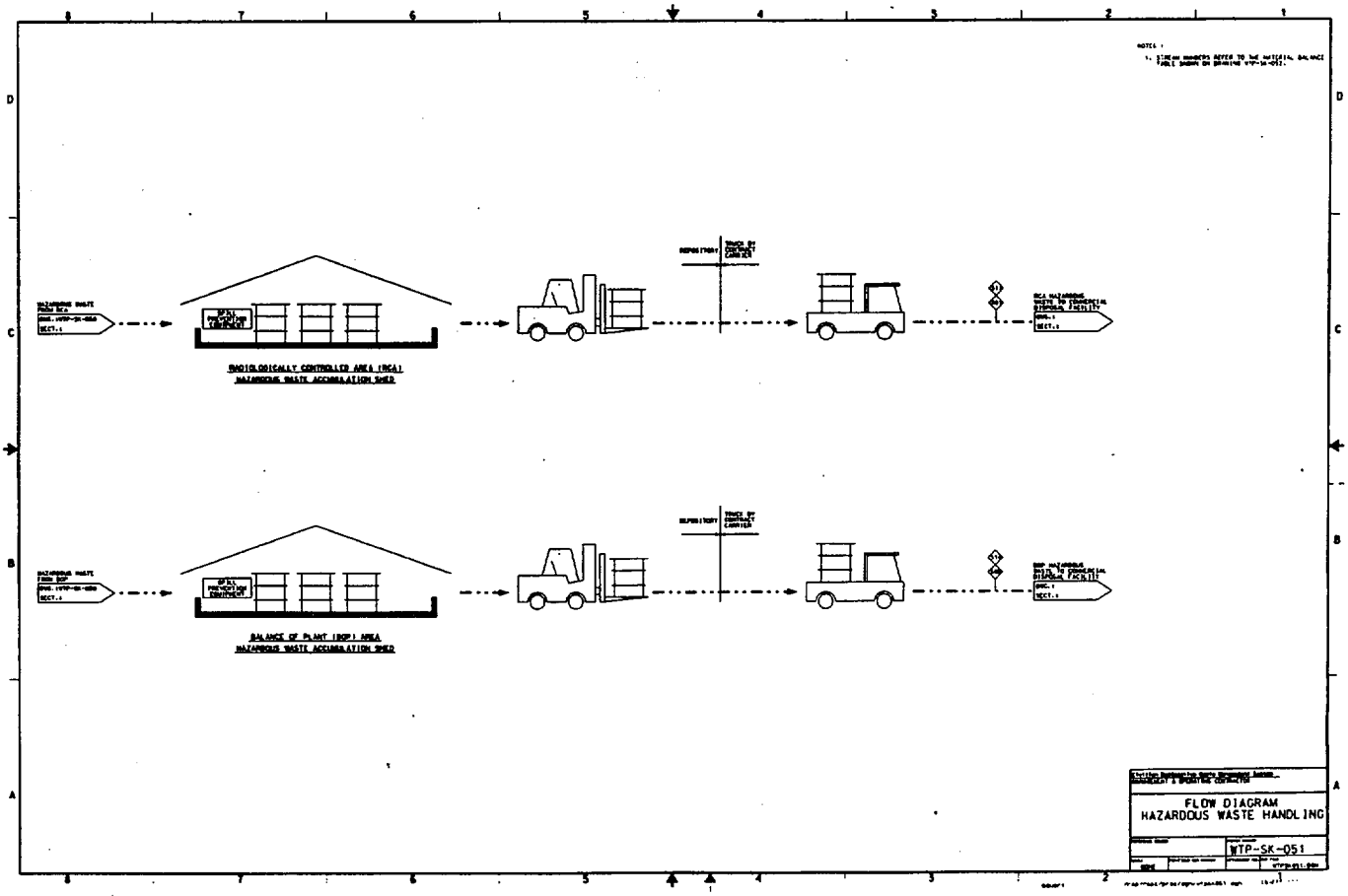
RADIOLOGICALLY CONTROLLED AREA (RCA)
HAZARDOUS WASTE ACCUMULATION SHED
BALANCE OF PLANT (BOP) AREA
HAZARDOUS WASTE ACCUMULATION SHED
FLOW DIAGRAM
HAZARDOUS WASTE HANDLING
WTP-SK-051

LIQUID HAZARDOUS WASTE

STREAM NO.	501	502	503	504	505	506	507	508	509	510	511	512	513	514
DESCRIPTION	WASTE OIL FROM WHB	WASTE OIL FROM CSS	WASTE OIL FROM CMF	WASTE OIL FROM WTB	WASTE OIL FROM TMB	COOLANT FROM TMB	SPENT SOLVENTS FROM TMB	WASTE OIL FROM SUB-SURFACE	WASTE OIL FROM MOTOR POOL	COOLANT FROM MOTOR POOL	SPENT SOLVENTS FROM MOTOR POOL	MEDICAL WASTE FROM MEDICAL CENTER	RCA LIQUID HW TO OFFSITE DISPOSAL	BOP LIQUID HW TO OFFSITE DISPOSAL
lb/YEAR	3.638	46	12	97	65	42	510	88.459	252	238	510	111	4.410	89.600
GALLONS/YEAR	486	6.2	1.6	13	8.7	4.8	72	11.816	34	27	72	12	600	12.000
DRUMS/YEAR (55 GALLON)	---	—	—	—	—	—	—	—	—	—	—	—	13	220
BULK DENSITY, lb/ft^3	56	56	56	56	56	66	53	56	56	66	53	69	—	—
PRESSURE, PSIG	ATM	ATM	ATM	ATM	ATM	ATM	ATM	ATM	ATM	ATM	ATM	ATM	ATM	ATM
TEMPERATURE, °F	AMBIENT	AMBIENT	AMBIENT	AMBIENT	AMBIENT	AMBIENT	AMBIENT	AMBIENT	AMBIENT	AMBIENT	AMBIENT	AMBIENT	AMBIENT	AMBIENT

SOLID HAZARDOUS WASTE

STREAM NO.	601	602	603	604	605	606	607	608
DESCRIPTION	SOLID HW FROM WHB	SOLID HW FROM CSS	SOLID HW FROM CMF	SOLID HW FROM WTB	SOLID HW FROM TMB	SOLID HW FROM BOP	RCA HW TO OFFSITE DISPOSAL	BOP HW TO OFFSITE DISPOSAL
lb/YEAR	6.143	79	20	164	1.061	149.720	7.486	149.720
ft^3/YEAR	154	2	0.5	4	27	3.743	187	3.743
DRUMS/YEAR (55 GALLON)	—	—	—	—	—	—	26	510
BULK DENSITY, lb/ft^3	40	40	40	40	40	40	40	40
PRESSURE, PSIG	ATM	ATM	ATM	ATM	ATM	ATM	ATM	ATM
TEMPERATURE, °F	AMBIENT	AMBIENT	AMBIENT	AMBIENT	AMBIENT	AMBIENT	AMBIENT	AMBIENT

FLOW DIAGRAM
HAZARDOUS WASTE HANDLING
MATERIAL BALANCE

WTP-SK-052

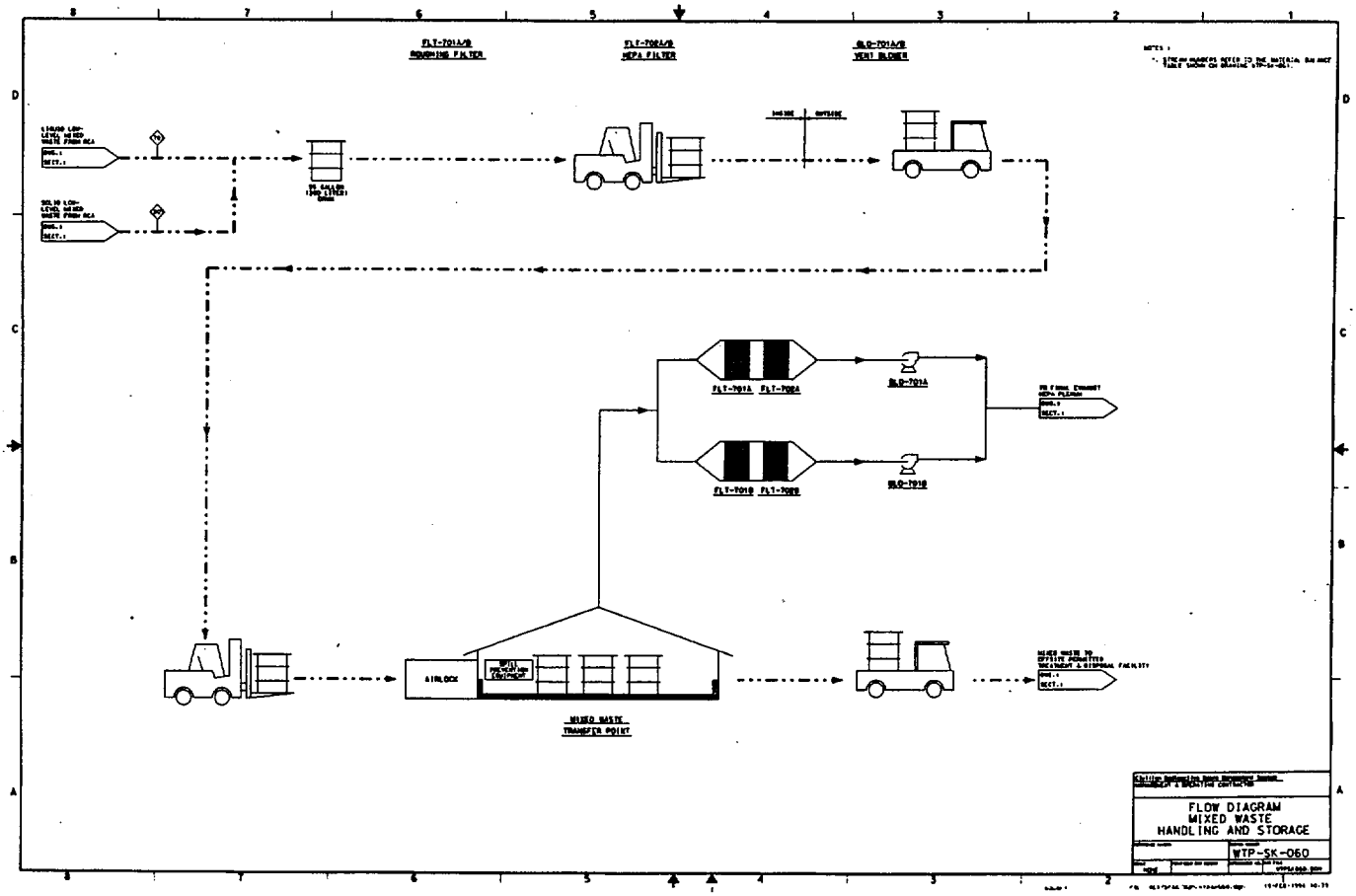
FLT-701A/B
PRIMARY FILTER
FLT-702A/B
HEPA FILTER
BLO-701A/B
VENT BLOWER
FLT-701A FLT-702A
BLO-701A
FLT-701B FLT-702B
BLO-701B
AIRLOCK
MIXED WASTE
TRANSFER POINT
FLOW DIAGRAM
MIXED WASTE
HANDLING AND STORAGE
WTP-SK-060

LIQUID MIXED WASTE

STREAM NO.	701
DESCRIPTION	LIQUID MIXED WASTE FROM RCA
lb/YEAR	243
GALLONS/YEAR	32
DRUMS/YEAR (55 GALLON)	1
BULK DENSITY, lb/ft^3	56
PRESSURE, PSIG	ATM
TEMPERATURE, °F	AMBIENT

SOLID MIXED WASTE

STREAM NO.	601
DESCRIPTION	SOLID MIXED WASTE FROM RCA
lb/YEAR	440
ft^3/YEAR	11
DRUMS/YEAR (55 GALLON)	2
BULK DENSITY, lb/ft^3	40
PRESSURE, PSIG	ATM
TEMPERATURE, °F	AMBIENT

FLOW DIAGRAM
MIXED WASTE
MATERIAL BALANCE

WTP-SK-061

CHEMICAL LIQUID LLW AREA EQUIPMENT

1. THK-101 - CHEMICAL LIQUID LLW COLLECTION TANK
2. THK-108 - pH ADJUSTMENT TANK
3. MIS-105 - CAUSTIC INJECTION SKID
4. MIS-106 - ACID INJECTION SKID
5. THK-109 - FLOOR DRAIN COLLECTION TANK
6. MIS-103 - CHEMICAL WASTE DRUM FILLING STATION
7. MIS-106 - CEMENT FEEDER
8. MIS-107 - CEMENT STORAGE SILO
9. MIS-104 - CEMENT MIXING STATION

RECYCLABLE LIQUID LLW AREA EQUIPMENT

1. THK-102 - RECYCLABLE LIQUID LLW COLLECTION TANK
2. FLT-101 - CARTRIDGE FILTERS
3. THK-103 - EVAPORATOR FEED TANK
4. THK-104 - CONDENSATE COLLECTION TANK
5. CND-101 - CONDENSER
6. EVP-101 - EVAPORATOR
7. HCI-101 - ION EXCHANGE COLUMNS
8. THK-105 - RESIN FEED TANK
9. THK-106 - SPENT RESIN CATCH TANK
10. MIS-102 - SPENT RESIN DRUM FILLING STATION
11. THK-107 - RECYCLE WATER STORAGE TANKS

SOLID LLW AREA EQUIPMENT

1. MIS-201 - WASTE TYPE SORTING STATION
2. MIS-203 - WASTE SIZE SORTING STATION
3. MIS-204 - SIZE REDUCING STATION
4. MIS-205 - IN-DRUM COMPACTOR
5. MIS-206 - SUPERCOMPACTOR
6. CUT-201 - PRESS / CUTTER (MECH DISASSEMBLY AREA)
7. MIS-202 - DEWATERING STATION
8. MIS-207 - CEMENT STORAGE SILO
9. MIX-201 - DRUM MIXING STATION
10. MIS-208 - CEMENT FEEDER
11. DPR-202 - DRUM LIFTER

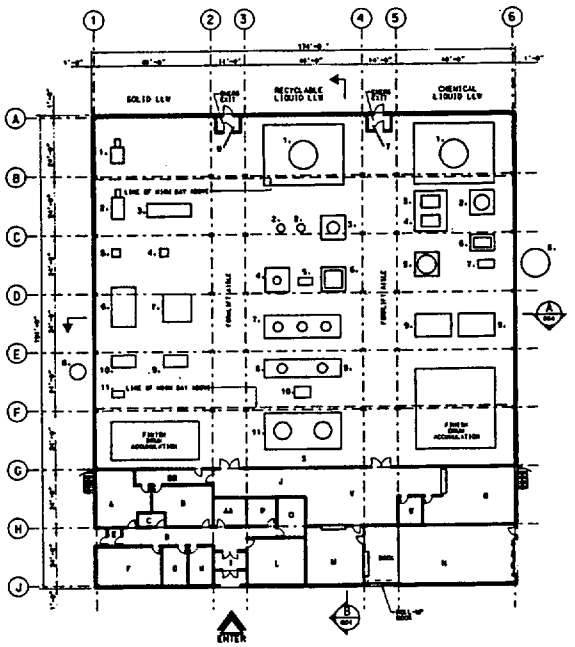

WASTE TREATMENT BUILDING FLOOR PLAN AT EL. 100+0

GRAPHIC SCALE

PLAN AT EL. 100+0

A. WOMEN'S TOILET / CHANGE RM
B. MEN'S TOILET / CHANGE RM
C. JANITOR RM
D. CORRIDOR
E. VESTIBULE
F. BREAK ROOM
G. HEALTH PHYSICS
H. ADMIN OFFICE
I. VESTIBULE
J. FORKLIFT AISLE
K. (NOT USED)
L. OFFICE
M. AIRLOCK
N. RECEIVING / SHIPPING
O. INVENTORY CONTROL OFFICE
P. QA OFFICE
Q. MIXED WASTE INTERIM ACCUMULATION
R. (NOT USED)
S. TOOL STORAGE AREA
T. VESTIBULE
U. VESTIBULE
V. FORKLIFT BATTERY CHARGER
W. SPARE PARTS STORAGE
AA. OFFICE
BB. AIRLOCK

PLAN AT EL. 115+0

X. MECHANICAL EQUIPMENT ROOM #1
Y. MECHANICAL EQUIPMENT ROOM #2

WASTE TREATMENT BUILDING
GENERAL ARRANGEMENT
FLOOR PLAN AT EL 100+0

WTA-SK-001

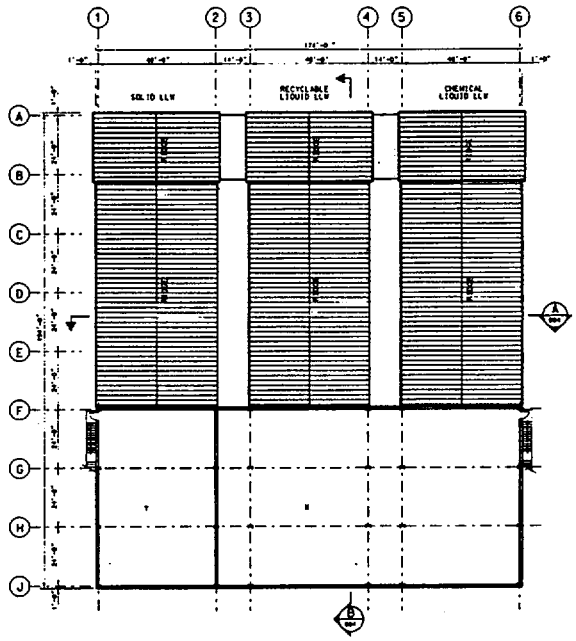

WASTE TREATMENT BUILDING FLOOR PLAN AT EL. 115+0

GRAPHIC SCALE

PLAN AT EL. 100+0

A. WOMEN'S TOILET / CHANGE RM
B. MEN'S TOILET / CHANGE RM
C. JANITOR RM
D. CORRIDOR
E. VESTIBULE
F. BREAK ROOM
G. HEALTH PHYSICS
H. ADMIN OFFICE
I. VESTIBULE
J. FORKLIFT AISLE
K. (NOT USED)
L. OFFICE
M. AIRLOCK
N. RECEIVING / SHIPPING
O. INVENTORY CONTROL OFFICE
P. QA OFFICE
Q. MIXED WASTE INTERIM ACCUMULATION
R. (NOT USED)
S. TOOL STORAGE AREA
T. VESTIBULE
U. VESTIBULE
V. FORKLIFT BATTERY CHARGER
W. SPARE PARTS STORAGE
AA. OFFICE
BB. AIRLOCK

PLAN AT EL. 115+0

X. MECHANICAL EQUIPMENT ROOM #1
Y. MECHANICAL EQUIPMENT ROOM #2

WASTE TREATMENT BUILDING
GENERAL ARRANGEMENT
FLOOR PLAN AT EL 115+0

WTA-SK-002

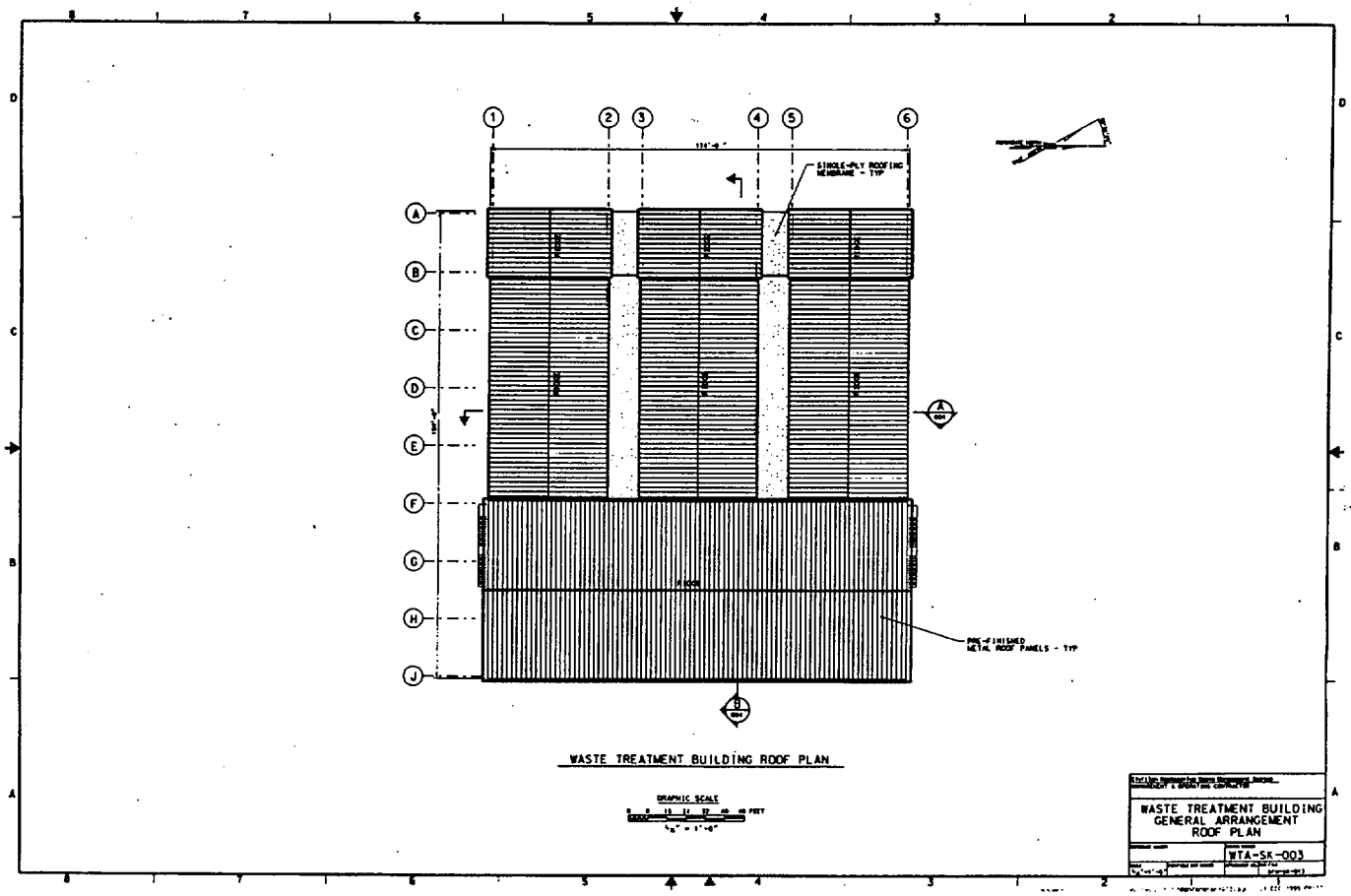
SINGLE-PLY ROOFING MEMBRANE - TYP
PRE-FINISHED METAL ROOF PANELS - TYP
WASTE TREATMENT BUILDING ROOF PLAN
GRAPHIC SCALE
WASTE TREATMENT BUILDING
GENERAL ARRANGEMENT
ROOF PLAN
WTA-SK-003

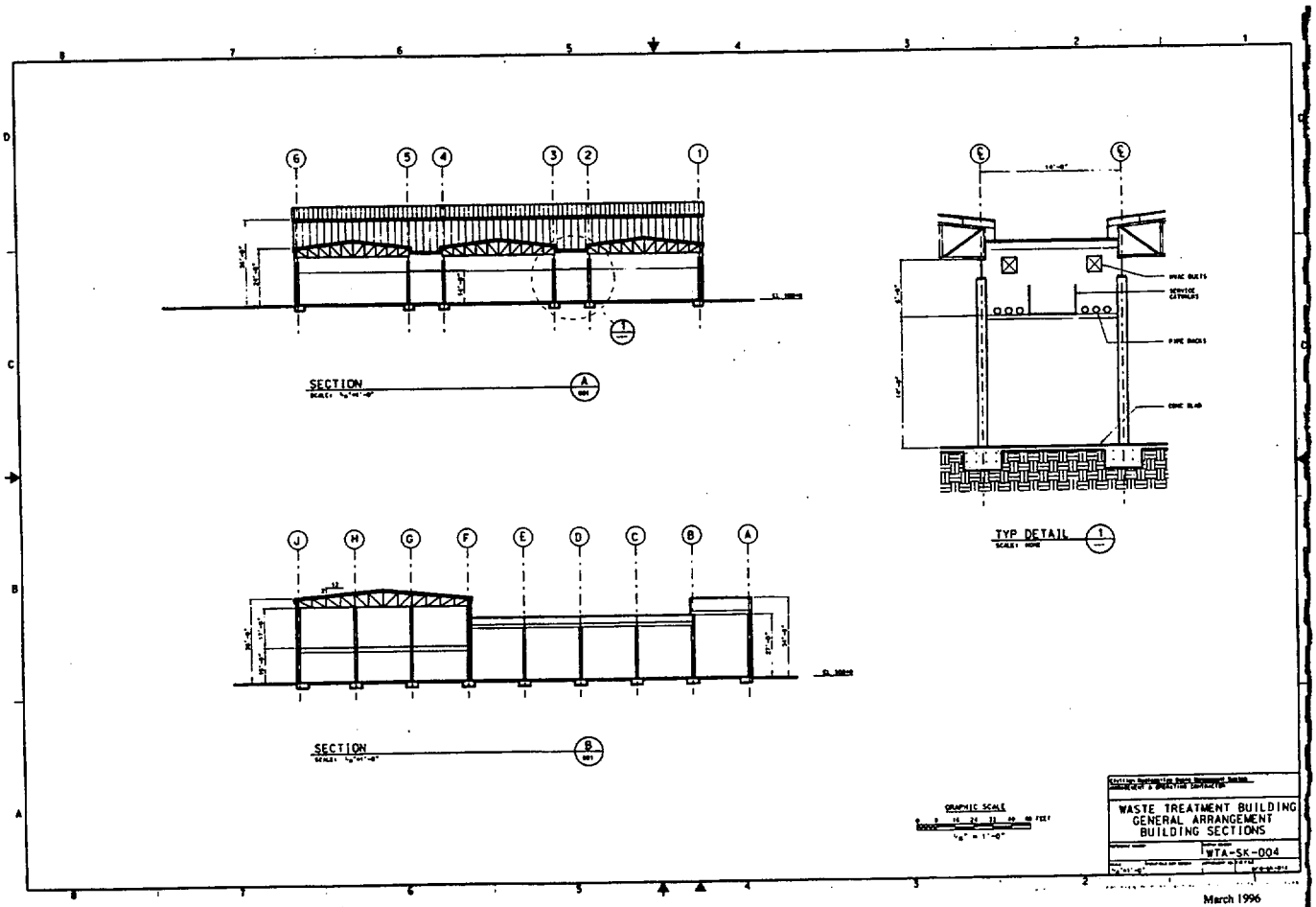
SECTION
SECTION
TYP DETAIL
GRAPHIC SCALE
WASTE TREATMENT BUILDING
GENERAL ARRANGEMENT
BUILDING SECTIONS
WTA-SK-004

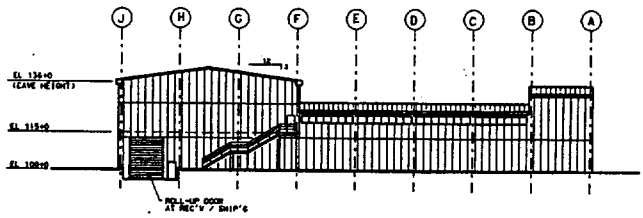

NORTH ELEVATION

GRAPHIC SCALE

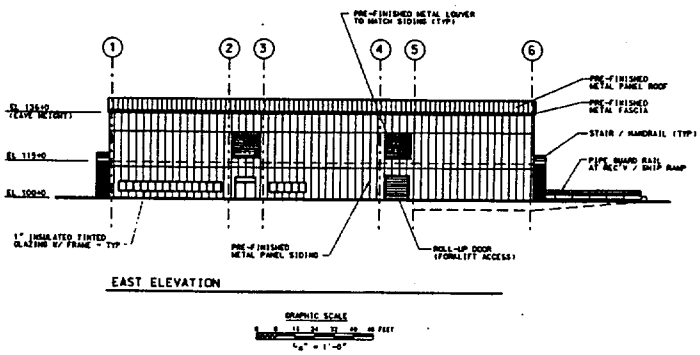

EAST ELEVATION

GRAPHIC SCALE

WASTE TREATMENT BUILDING
GENERAL ARRANGEMENT
ELEVATIONS

WTA-SK-005

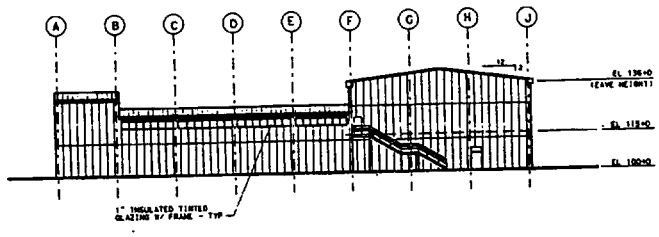

SOUTH ELEVATION

GRAPHIC SCALE

WEST ELEVATION

GRAPHIC SCALE

WASTE TREATMENT BUILDING
GENERAL ARRANGEMENT
ELEVATIONS

WTA-SK-006

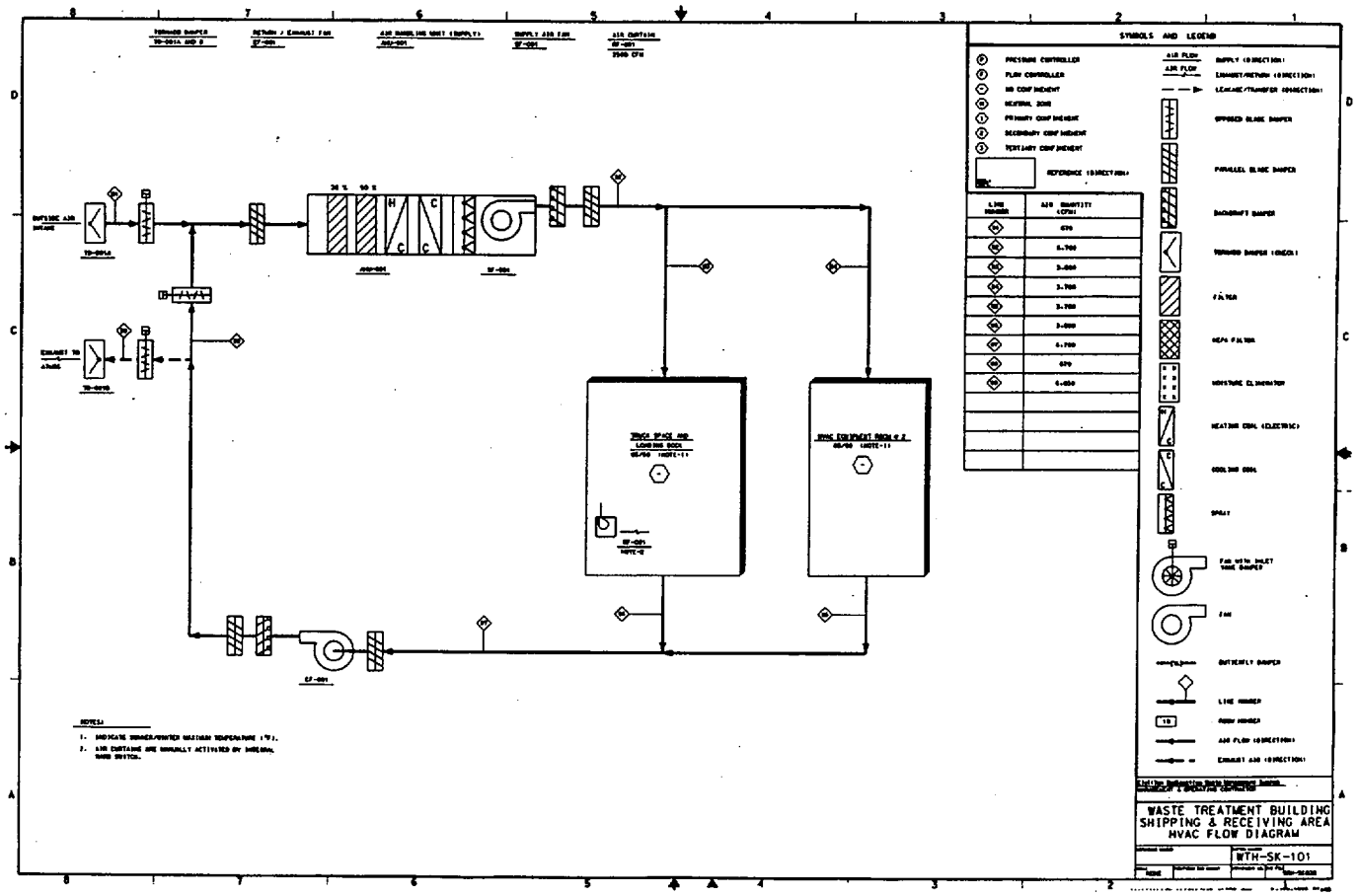
SYMBOLS AND LEGEND
WASTE TREATMENT BUILDING
SHIPPING & RECEIVING AREA
HVAC FLOW DIAGRAM
WTH-SK-101

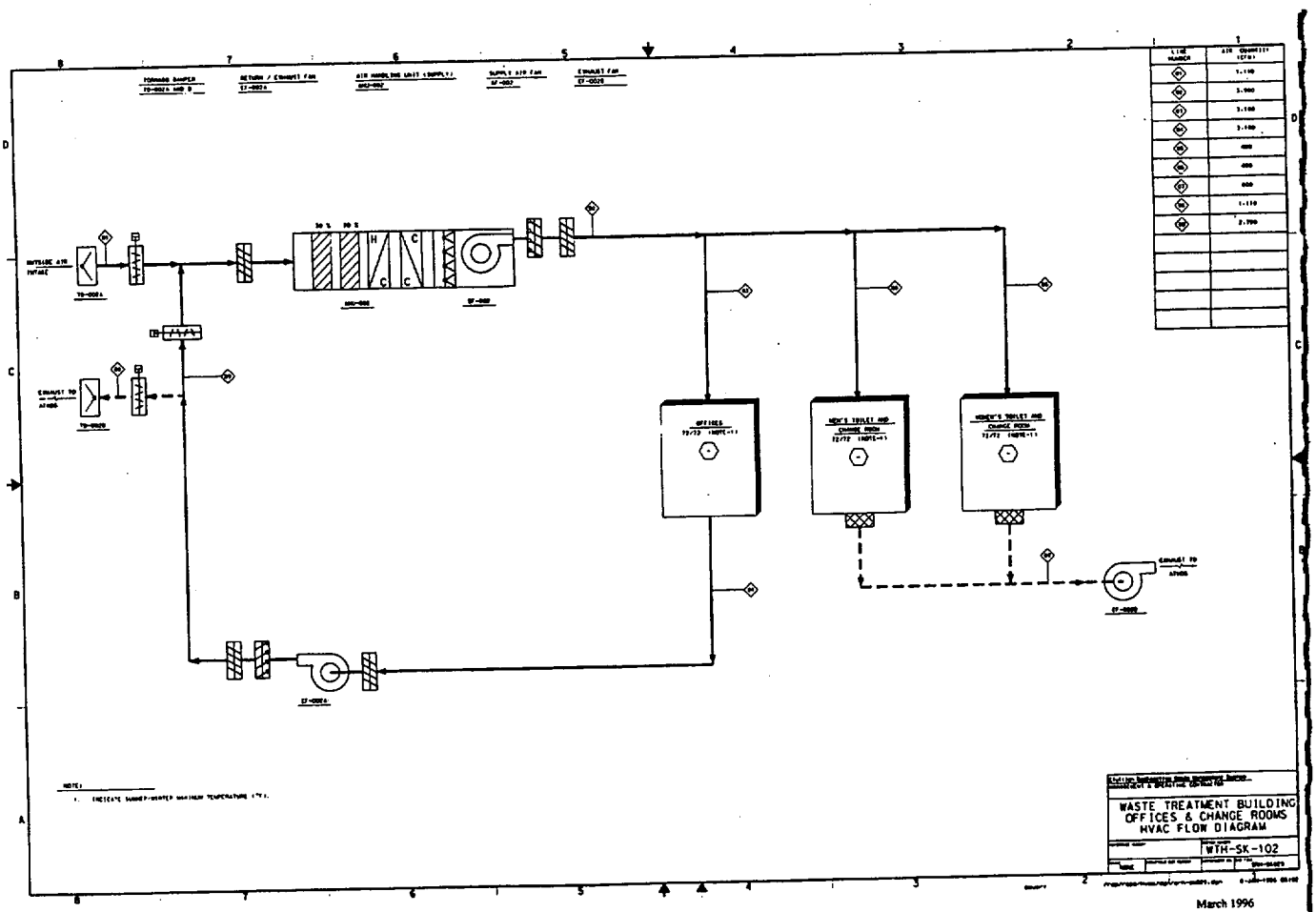
WASTE TREATMENT BUILDING
OFFICES & CHANGE ROOMS
HVAC FLOW DIAGRAM
WTH-SK-102

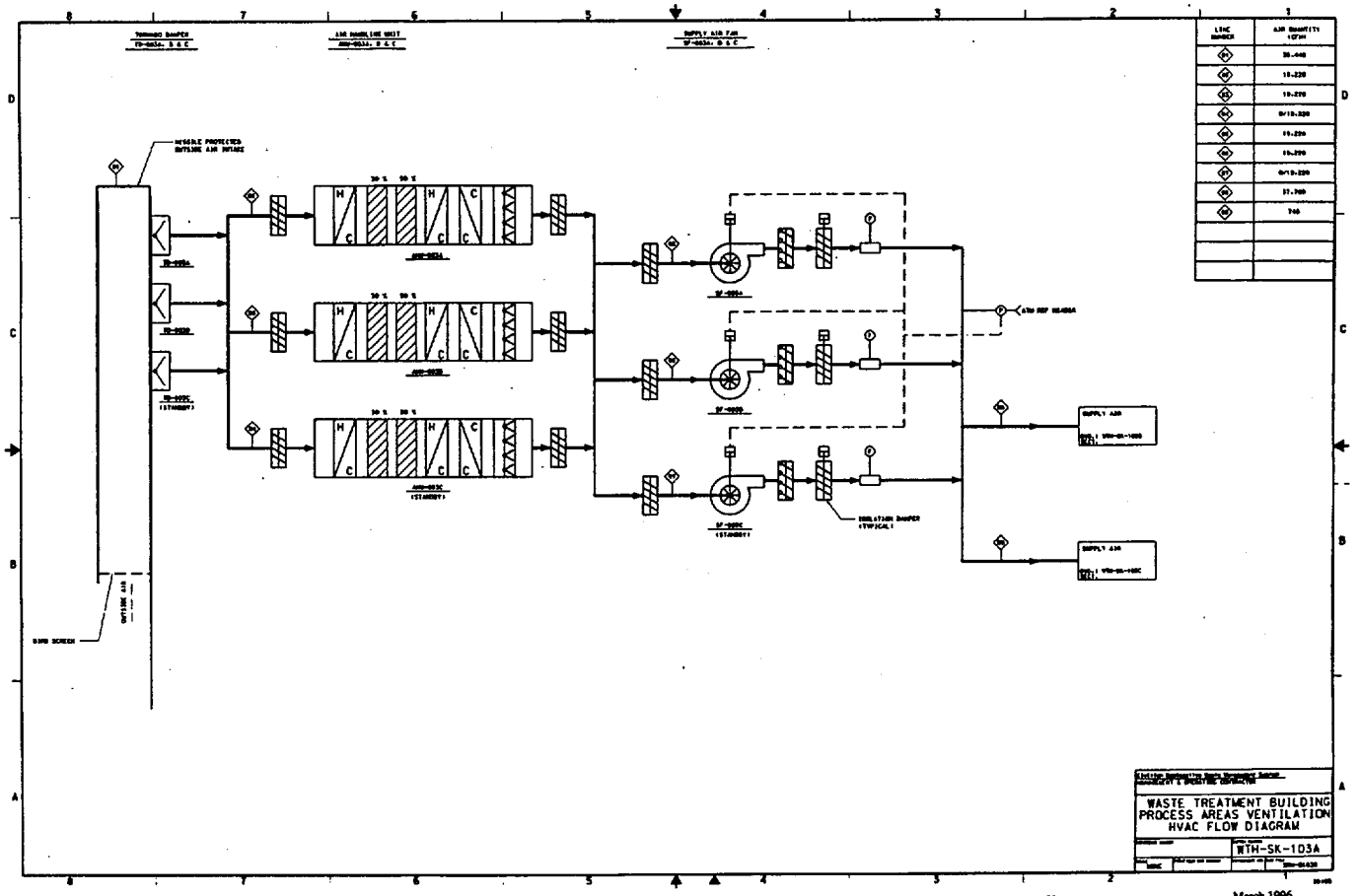
WASTE TREATMENT BUILDING
PROCESS AREAS VENTILATION
HVAC FLOW DIAGRAM
WTH-SK-103A

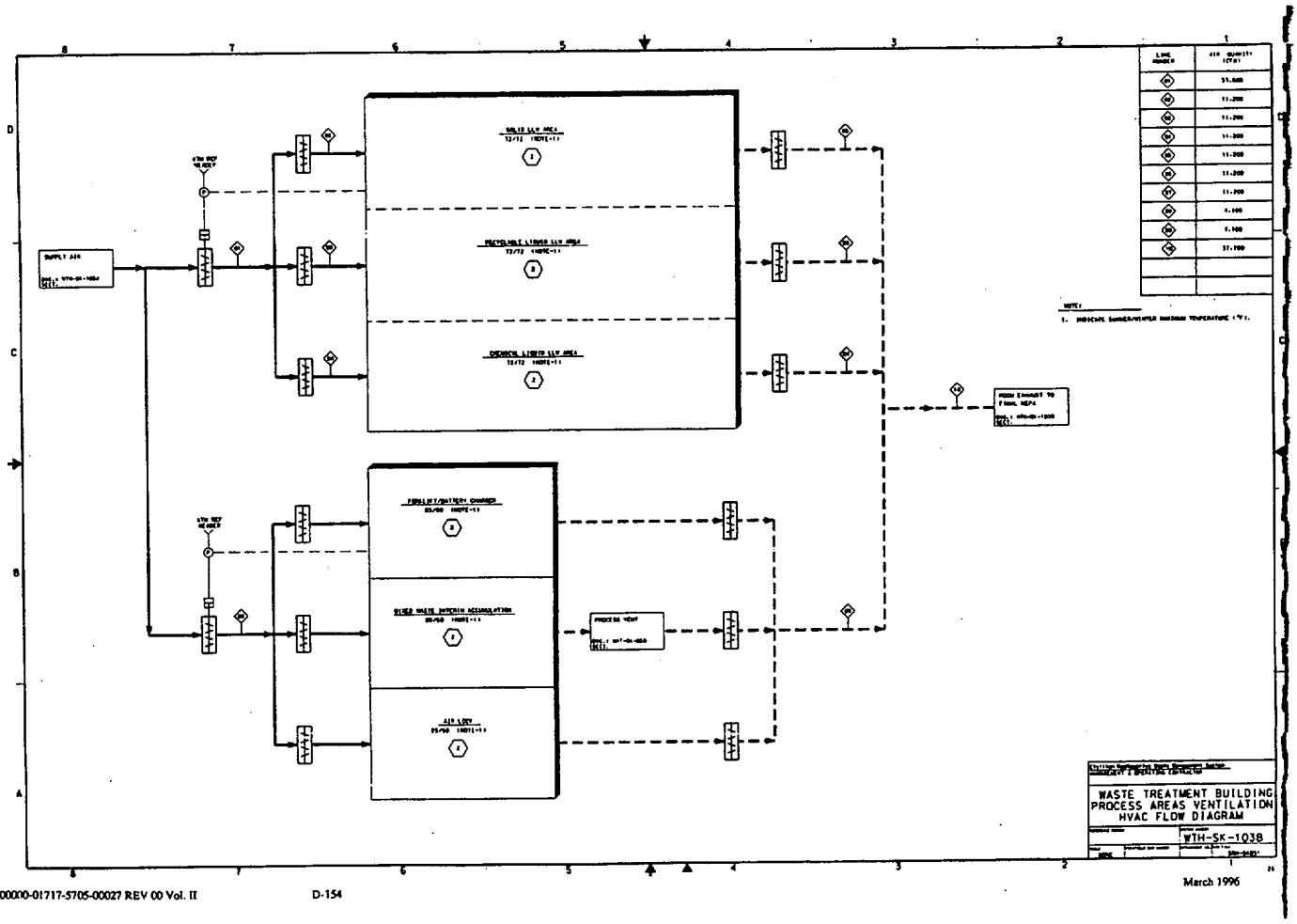
SUPPLY AIR
WASTE TREATMENT BUILDING
PROCESS AREAS VENTILATION
HVAC FLOW DIAGRAM
WTH-SK-1038

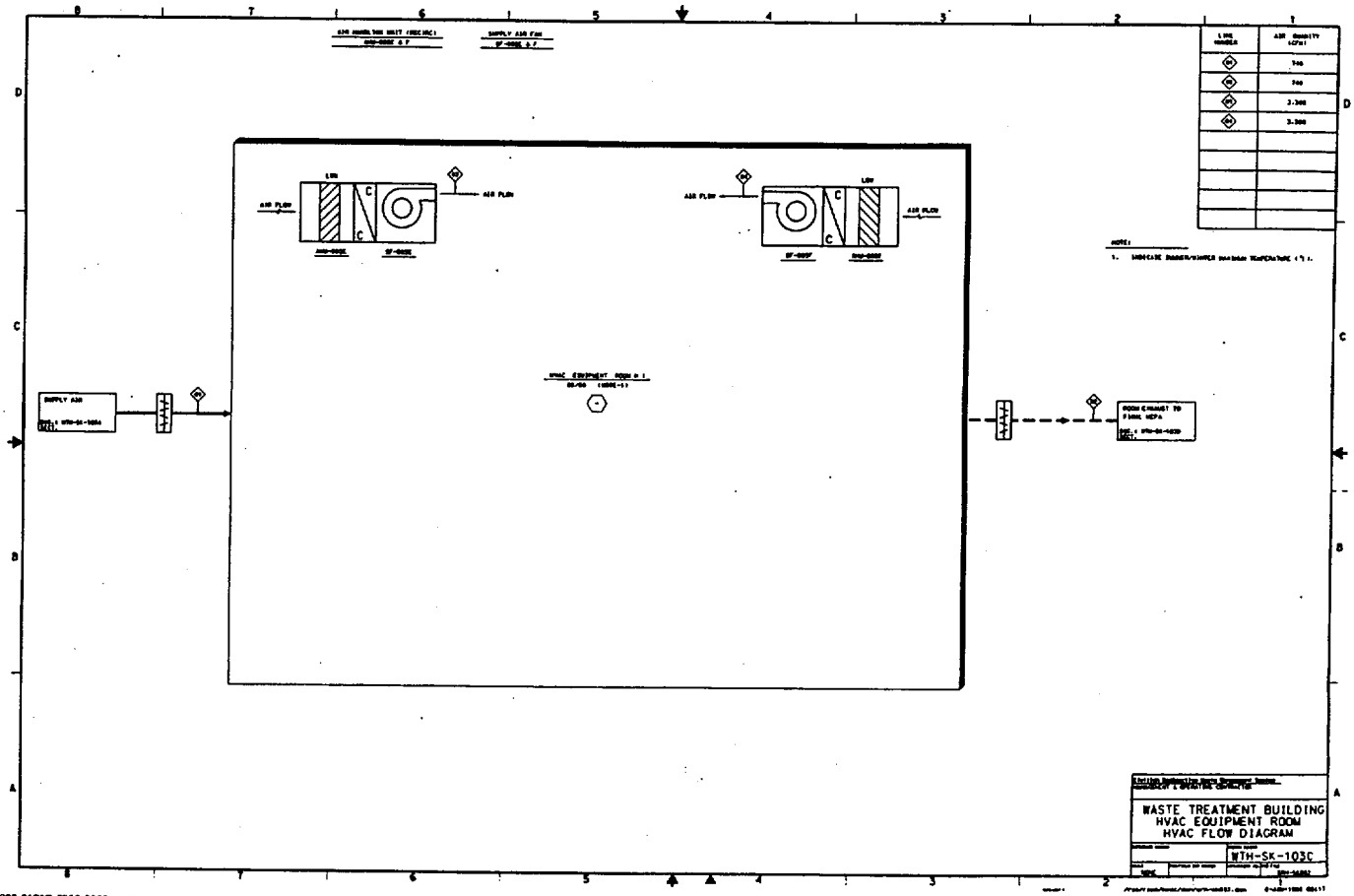
AIR FLOW
AIR FLOW
AIR FLOW
AIR FLOW
SUPPLY AIR
WASTE TREATMENT BUILDING
HVAC EQUIPMENT ROOM
HVAC FLOW DIAGRAM
WTH-SK-103C

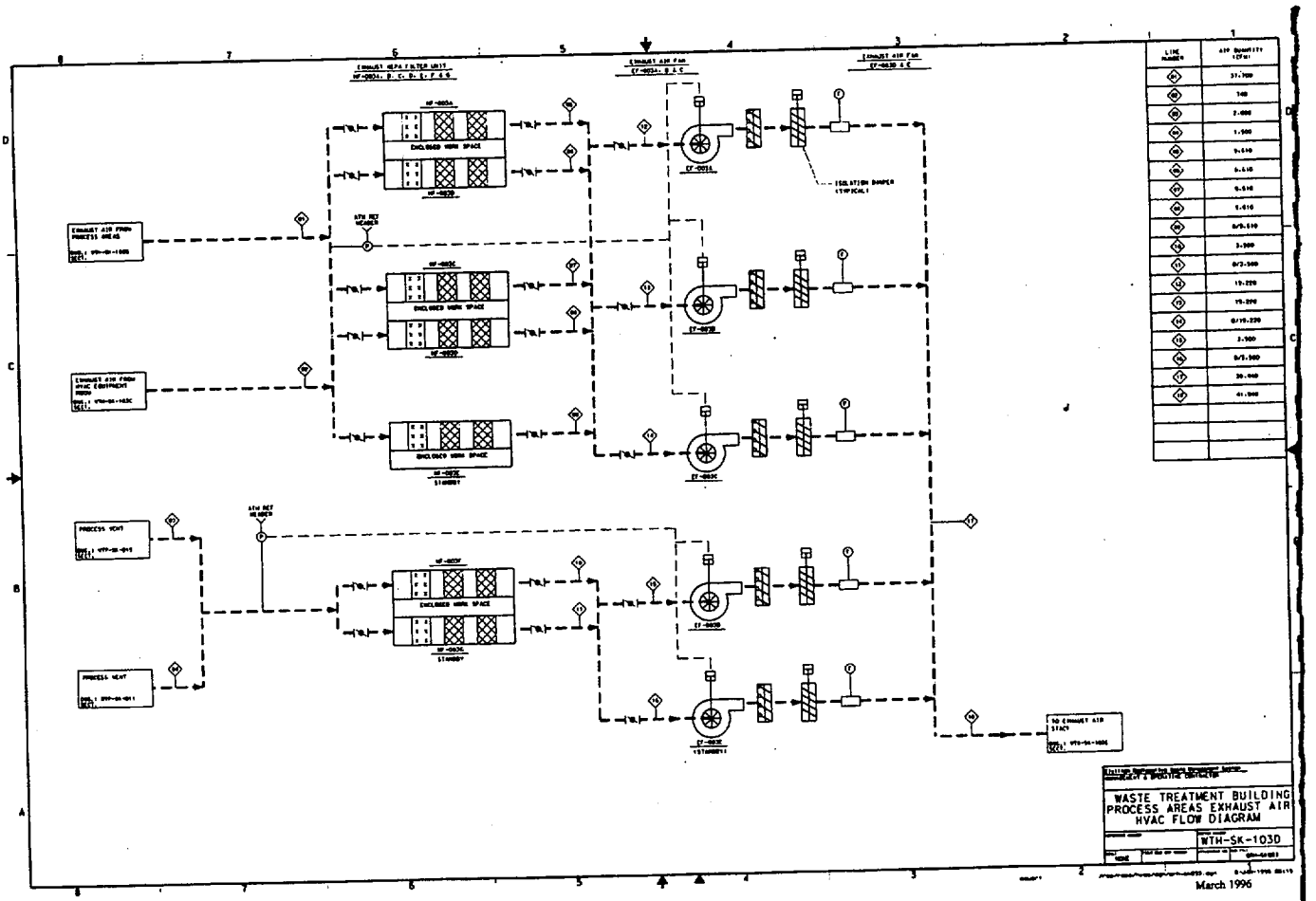
WASTE TREATMENT BUILDING
PROCESS AREAS EXHAUST AIR
HVAC FLOW DIAGRAM
WTH-SK-1030
March 1996

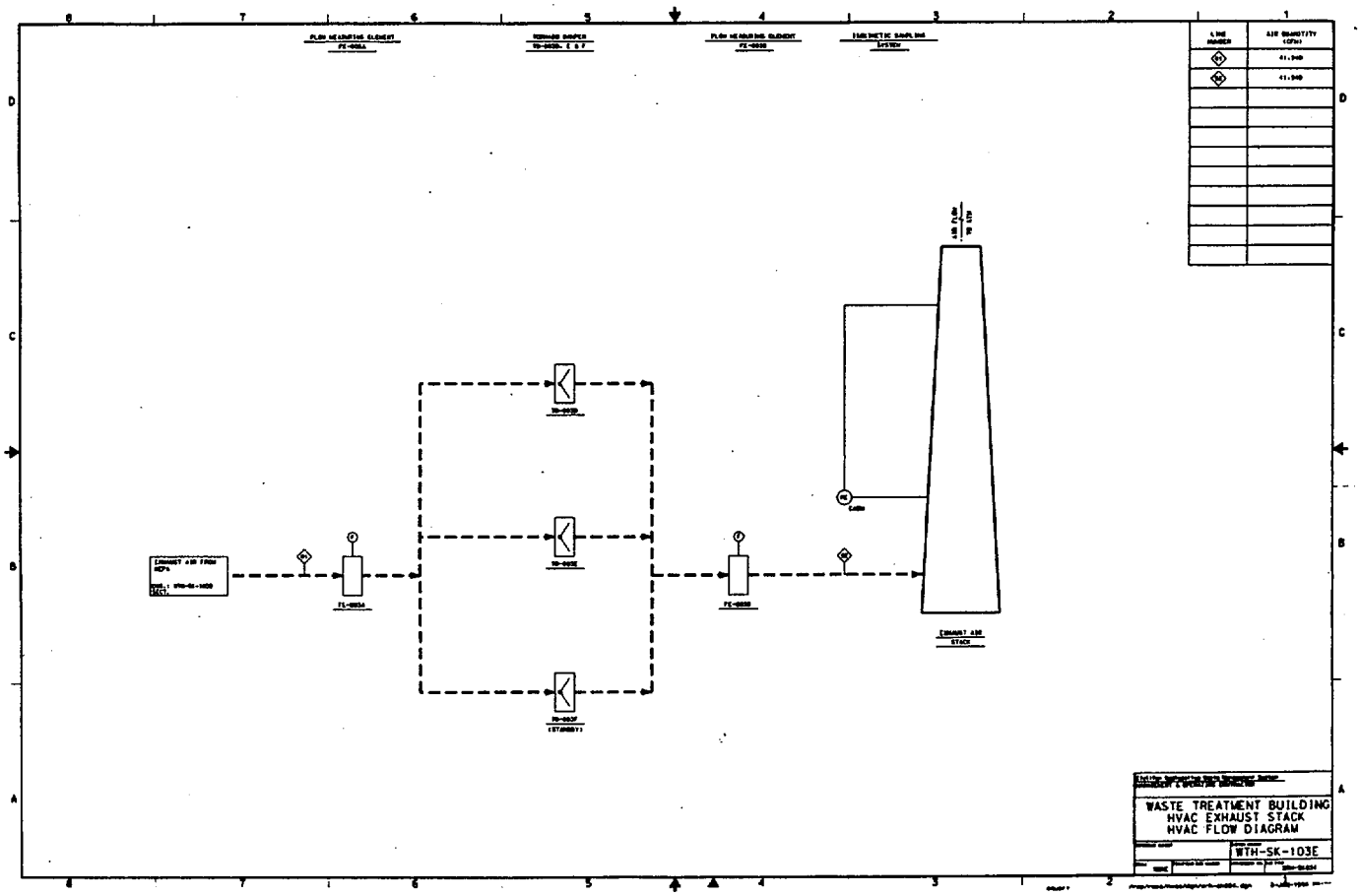
WASTE TREATMENT BUILDING
HVAC EXHAUST STACK
HVAC FLOW DIAGRAM
WTH-SK-103E

INTENTIONALLY LEFT BLANK

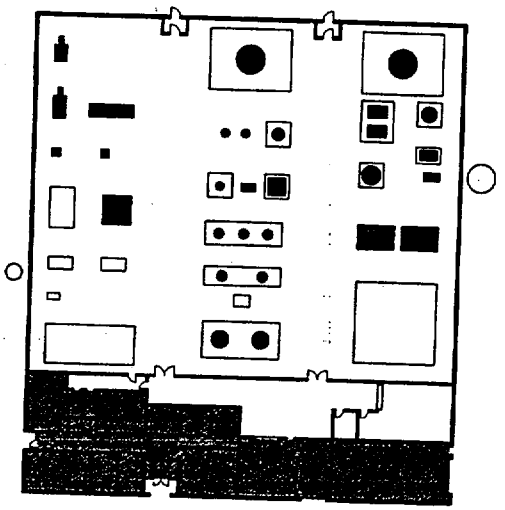

CONFINEMENT ZONES

PRIMARY

SECONDARY

TERTIARY

NON-CONFINEMENT AREA

NEUTRAL

WASTE TREATMENT BUILDING FLOOR PLAN AT EL. 100+0

GRAPHIC SCALE

WASTE TREATMENT BUILDING
HVAC CONFINEMENT ZONES
PLAN AT EL 100+0

WTH-SK104A

INTENTIONALLY LEFT BLANK

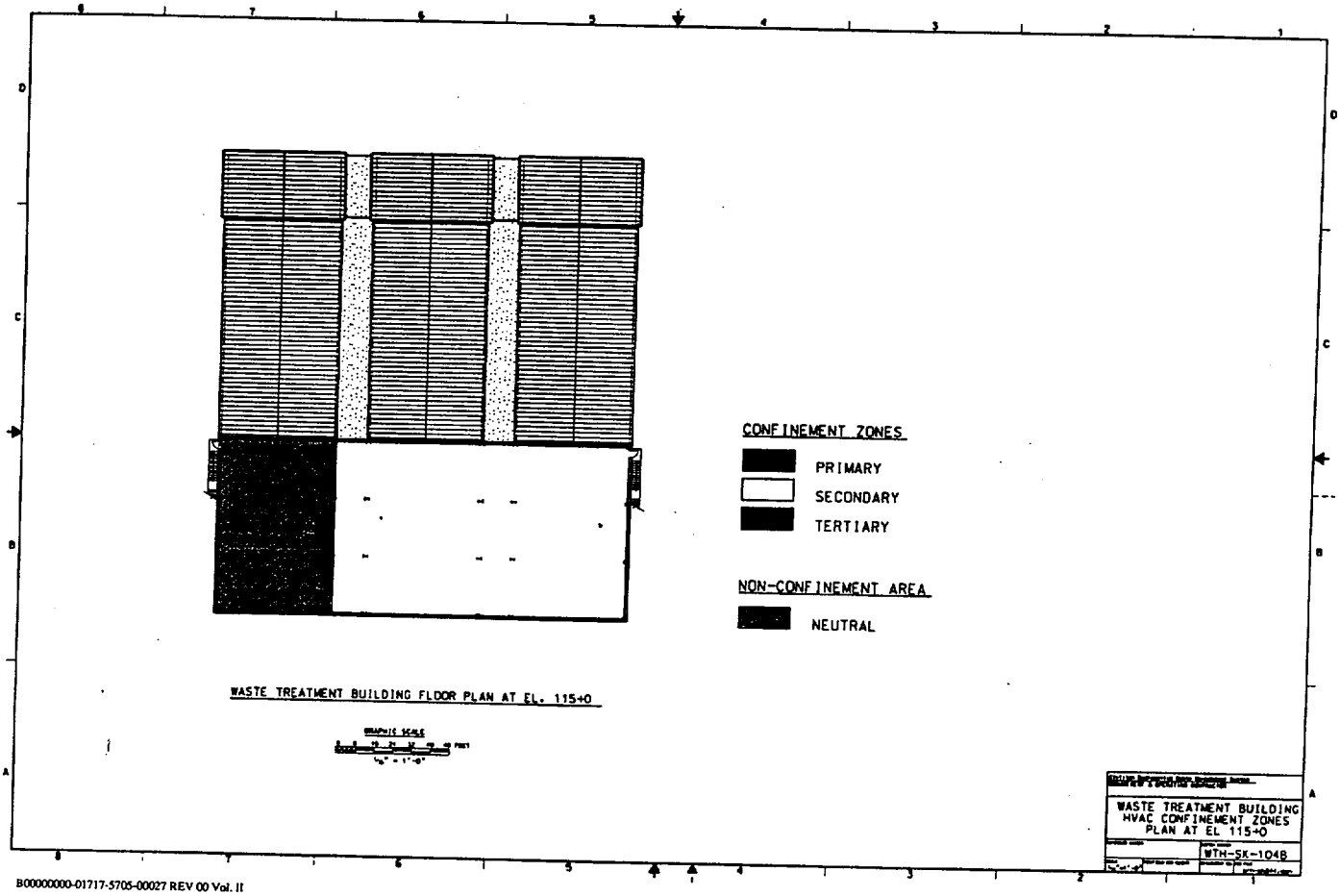
CONFINEMENT ZONES
PRIMARY
SECONDARY
TERTIARY
NON-CONFINEMENT AREA
NEUTRAL
WASTE TREATMENT BUILDING FLOOR PLAN AT EL. 115+0
WASTE TREATMENT BUILDING
HVAC CONFINEMENT ZONES
PLAN AT EL 115+0
WTH-SK-104B

INTENTIONALLY LEFT BLANK

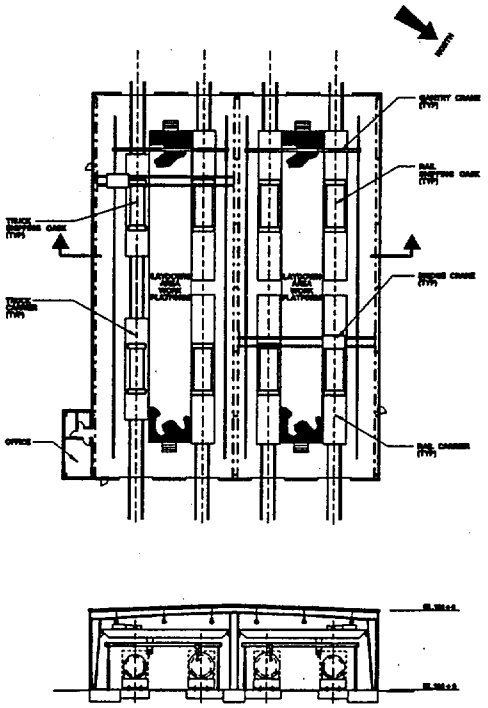

Figure 7.2.5-1. Carrier Staging Shed (Floor Plan and Building Section)

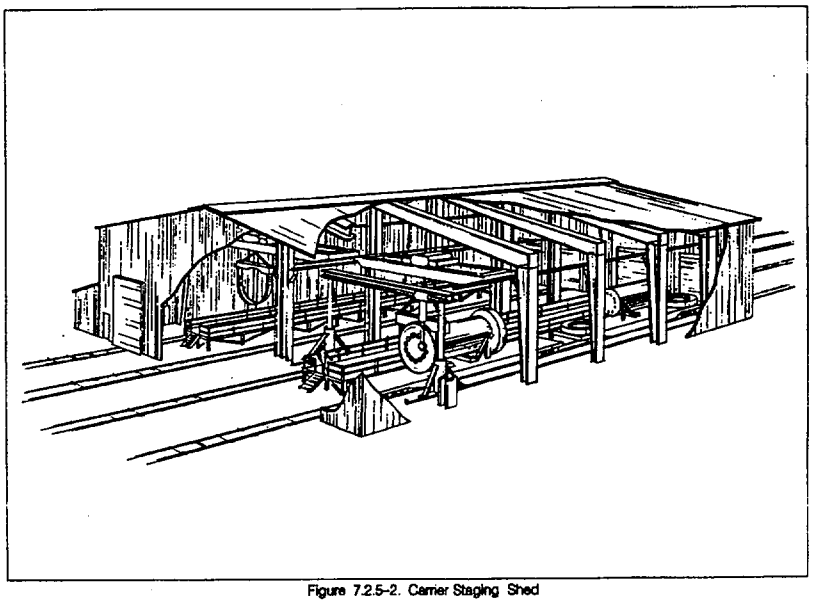

Figure 7.2.5-2. Carrier Staging Shed

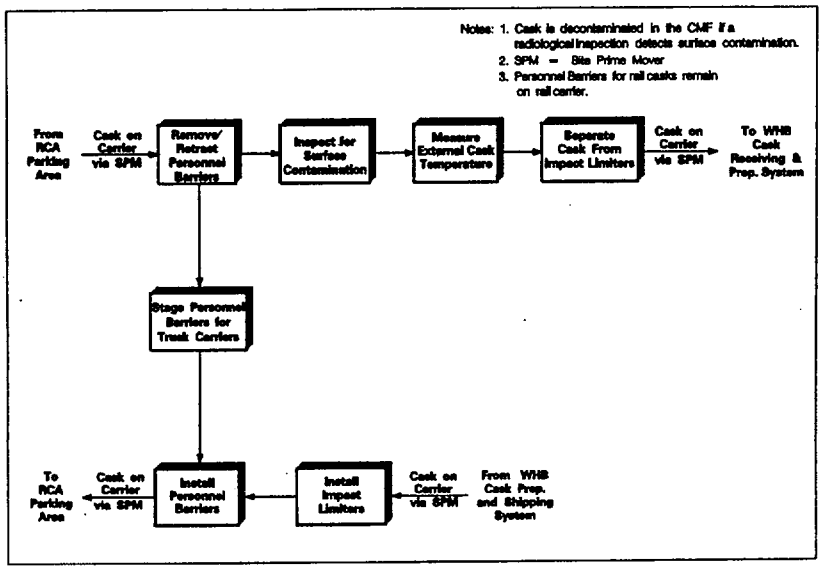

Figure 7.2.5-3. Carrier Staging System

LEGEND

CSS CARRIER STAGING SHED
HI HOIST INSTRUMENT
IL IMPACT LIMITER
ILB IMPACT LIMITER BOLTER
ME MECHANICAL EQUIPMENT

ME-005
ROLL-UP DOOR
ELECTRIC DRIVE
(TYP OF 2)

ME-010
IL SLING & SPREADER BEAM
(TYP OF 2)

HI-010
CSS CRANE
10 TON OVERHEAD
(TYP OF 1)

HI-020
ILB GANTRY
2 TON
(TYP OF 1)

ME-015
IMPACT LIMITER BOLTER
(TYP OF 2)

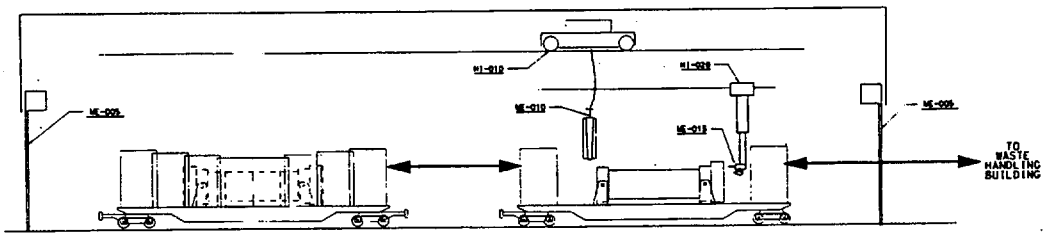

CARRIER STAGING SHED

Civilian Radioactive Waste Management System
MANAGEMENT & OPERATING CONTRACTOR

CARRIER STAGING SHED
MECHANICAL FLOW DIAGRAM
SHEET 1

DRAWING NUMBER
CSS-SK-101A

SCALE | FORM 9010 ECO NUMBER | ATTACHMENT NO. 9040 FILE
SFMY-SK011

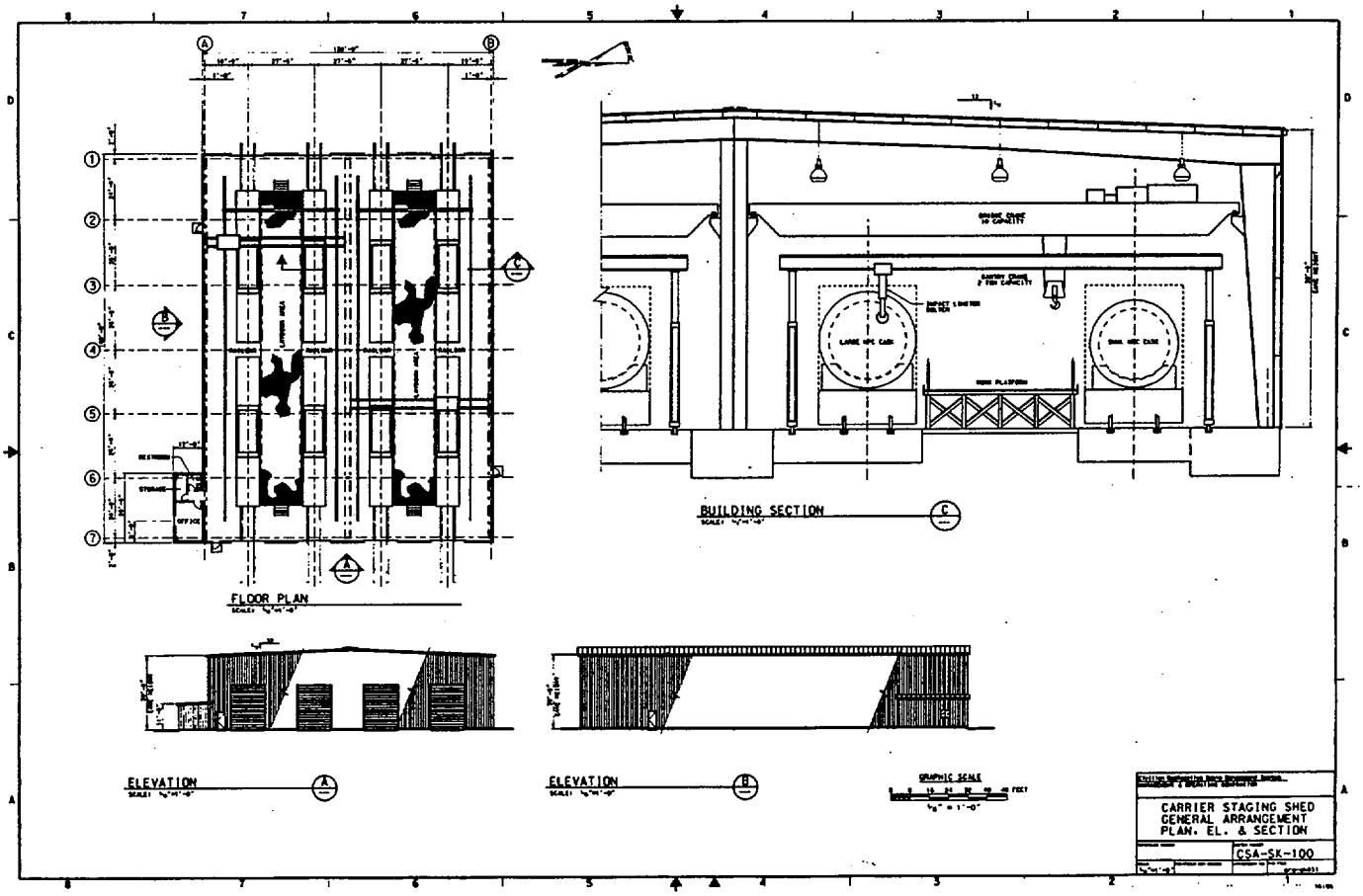
FLOOR PLAN
BUILDING SECTION
ELEVATION
ELEVATION
GRAPHIC SCALE
CARRIER STAGING SHED
GENERAL ARRANGEMENT
PLAN, EL. & SECTION
CSA-SK-100

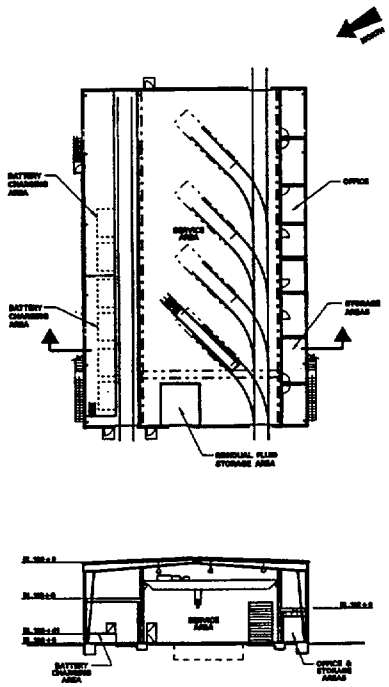

Figure 7.2.6-1. Transporter Maintenance Building (Floor Plan and Building Section)

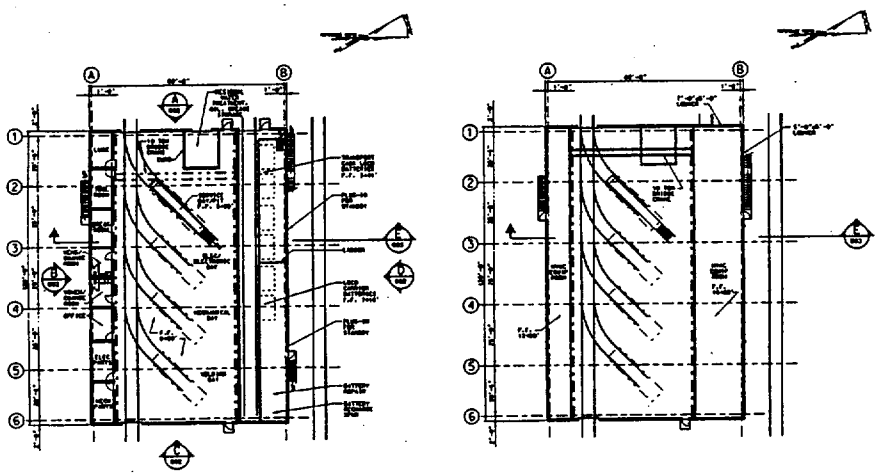

FIRST FLOOR PLAN

MEZZANINE FLOOR PLAN

GRAPHIC SCALE

TRANSPORTER MAINT BLDG
GENERAL ARRANGEMENT
FLOOR PLAN EL 100 & MEZZ

TMA-SK001

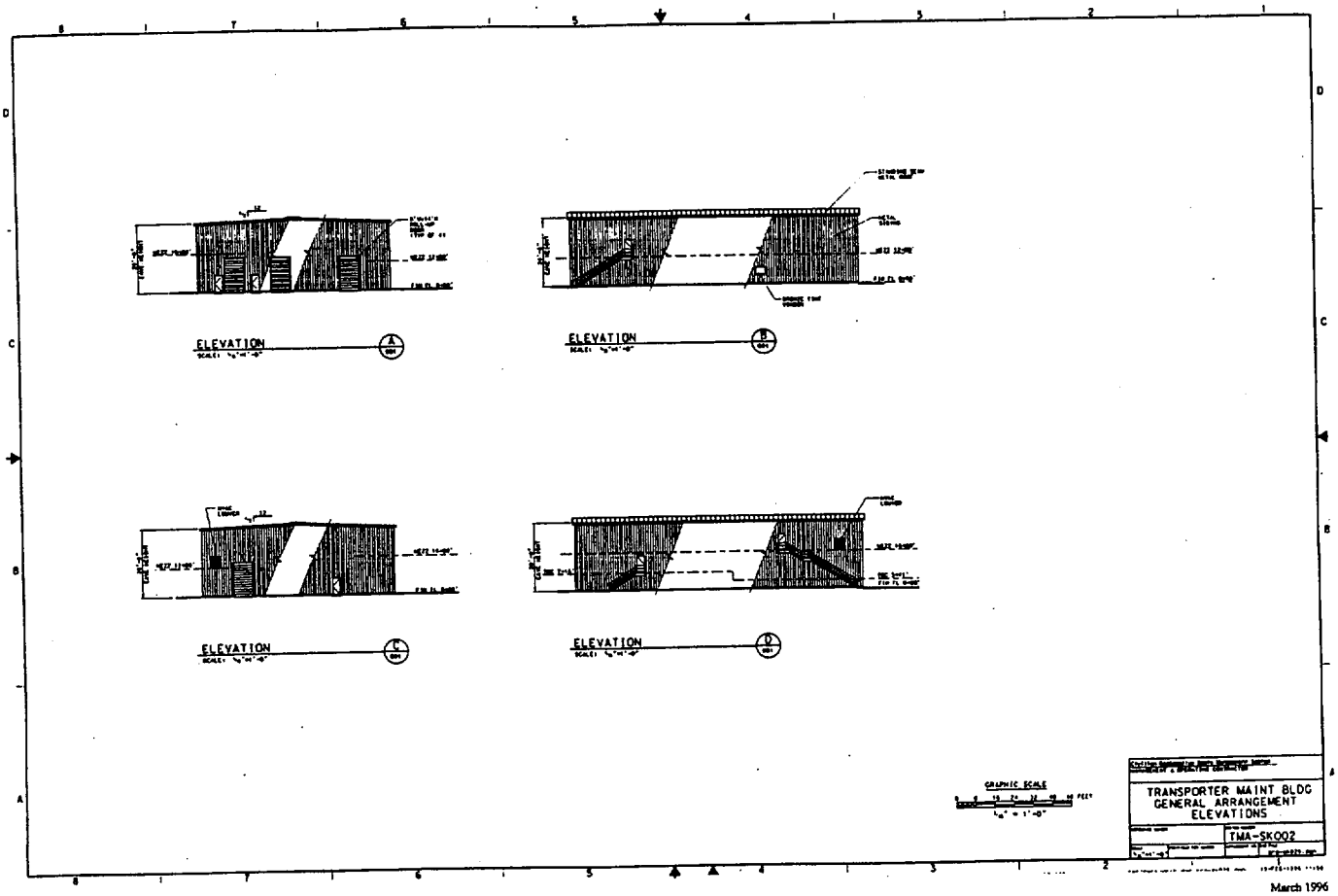
ELEVATION
ELEVATION
ELEVATION
ELEVATION
GRAPHIC SCALE
TRANSPORTER MAINT BLDG
GENERAL ARRANGEMENT
ELEVATIONS
TMA-SK002

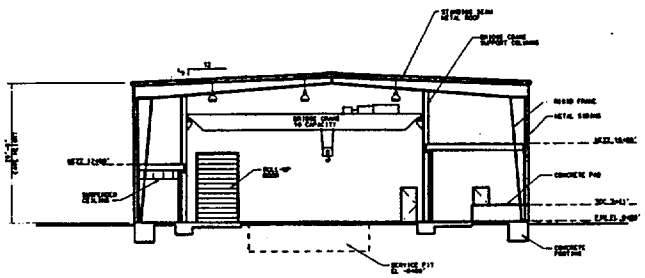

BUILDING SECTION

GRAPHIC SCALE

TRANSPORTER MAINT BLDG
GENERAL ARRANGEMENT
BUILDING SECTION

TMA-SK003

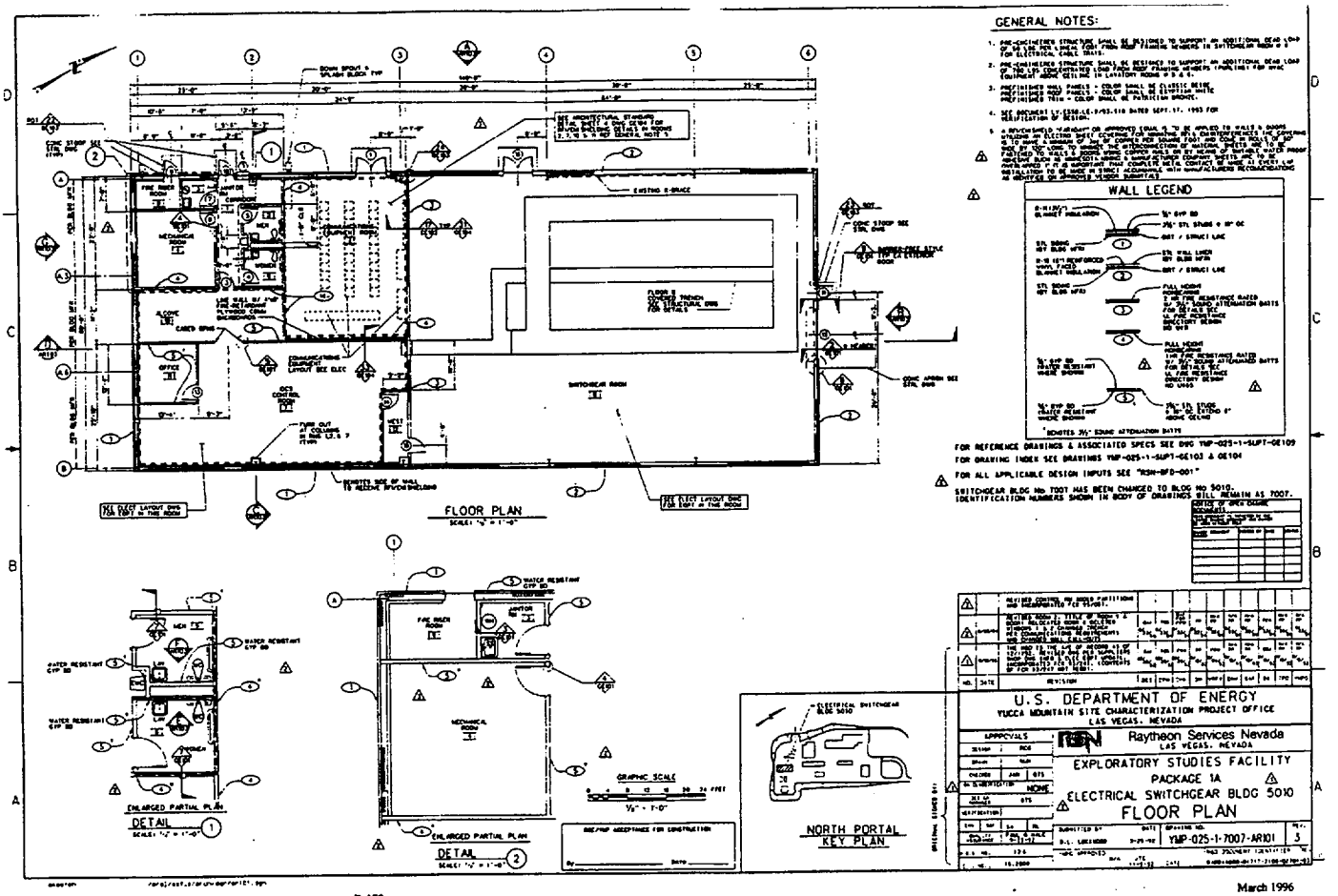
GENERAL NOTES:
WALL LEGEND
FLOOR PLAN
SCALE: 1/4" = 1'-0"
DETAIL
SCALE: 1/2" = 1'-0"
ENLARGED PARTIAL PLAN
NORTH PORTAL KEY PLAN
GRAPHIC SCALE
U.S. DEPARTMENT OF ENERGY
YUCCA MOUNTAIN SITE CHARACTERIZATION PROJECT OFFICE
LAS VEGAS, NEVADA
Raytheon Services Nevada
LAS VEGAS, NEVADA
EXPLORATORY STUDIES FACILITY
PACKAGE 1A
ELECTRICAL SWITCHGEAR BLDG 5010
FLOOR PLAN
YMP-025-1-7007-AR101

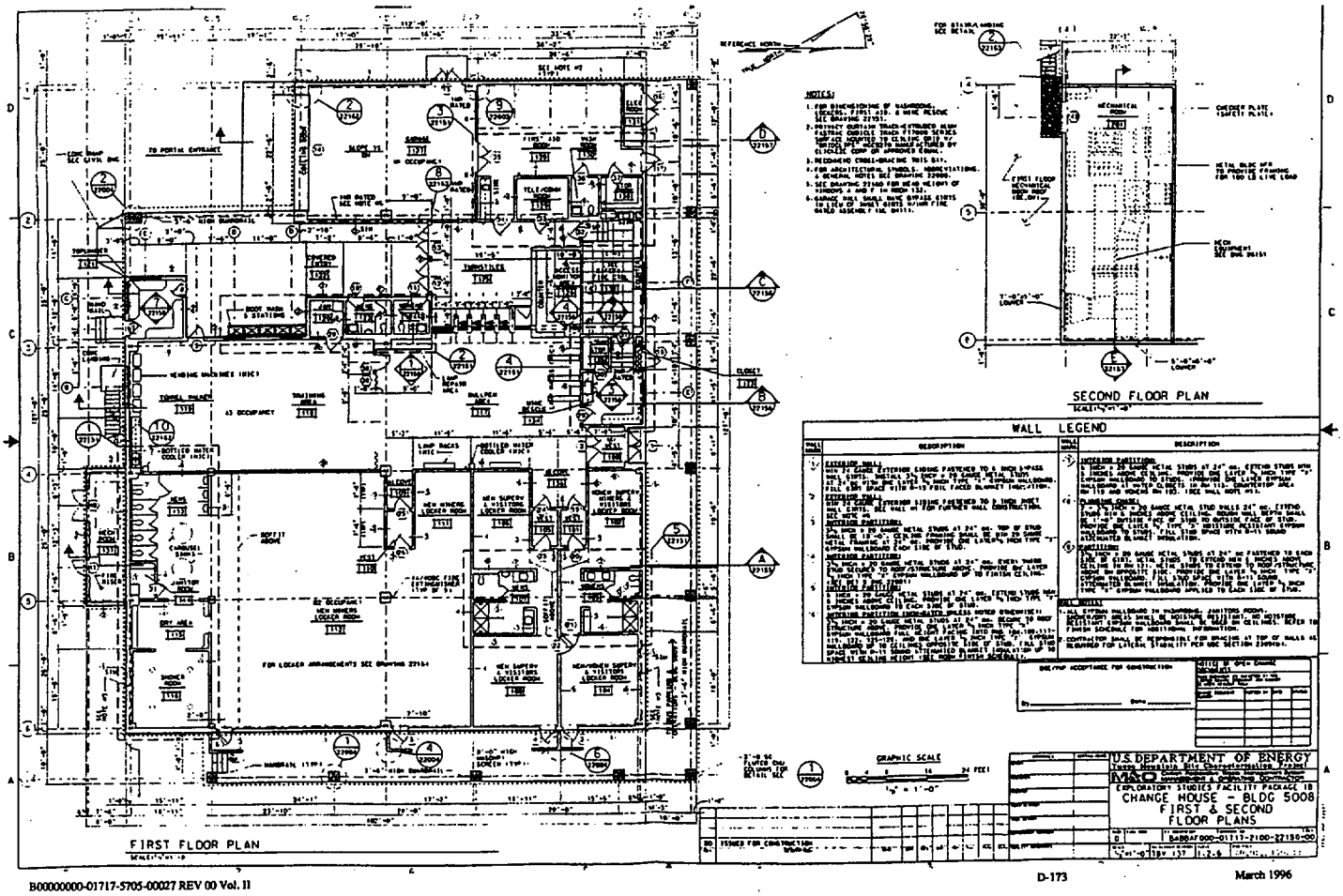
FIRST FLOOR PLAN
SECOND FLOOR PLAN
WALL LEGEND
GRAPHIC SCALE
U.S. DEPARTMENT OF ENERGY
CHANGE HOUSE - BLDG 5008
FIRST & SECOND
FLOOR PLANS

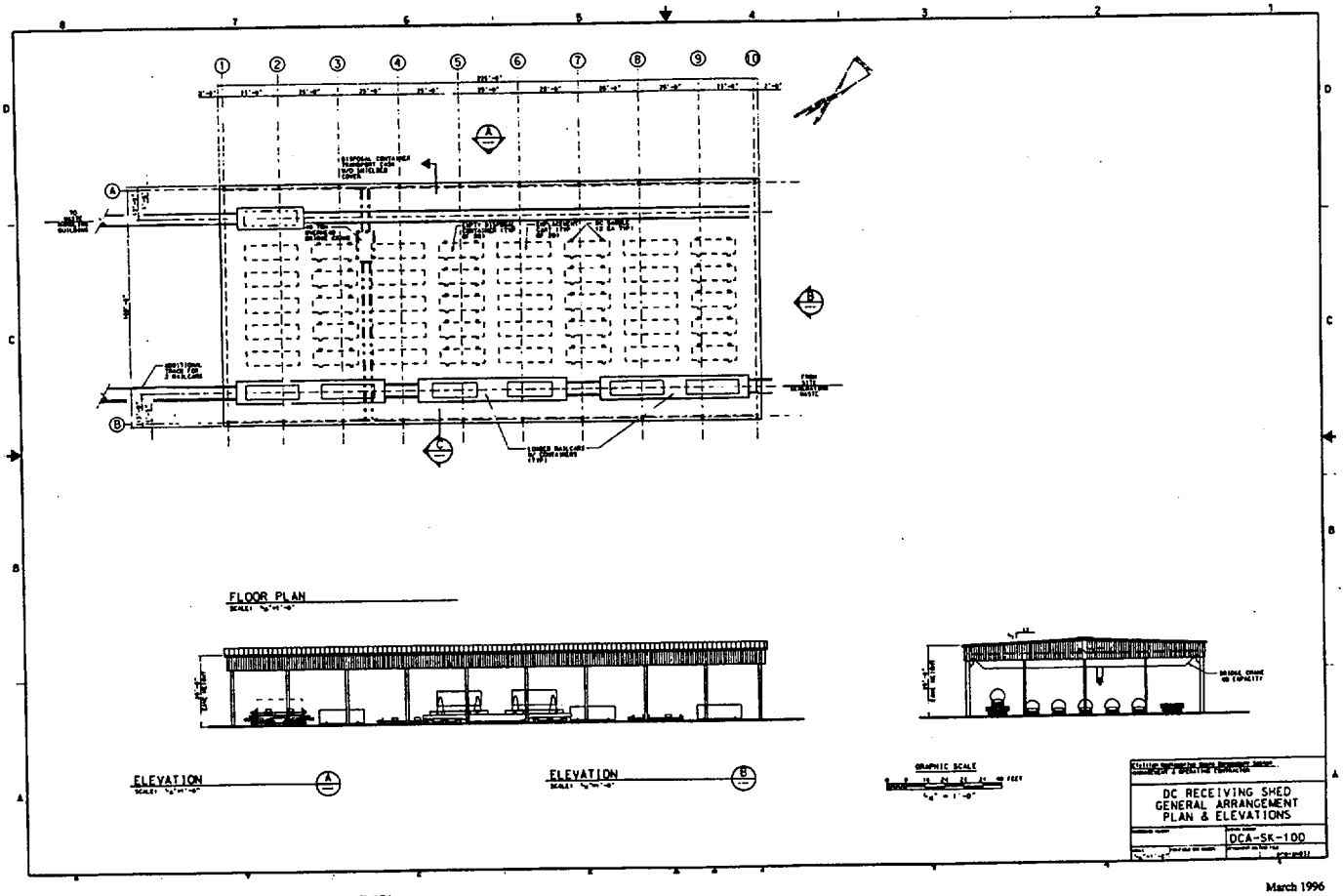
FLOOR PLAN
ELEVATION
ELEVATION
GRAPHIC SCALE
DC RECEIVING SHED
GENERAL ARRANGEMENT
PLAN & ELEVATIONS
DCA-SK-100

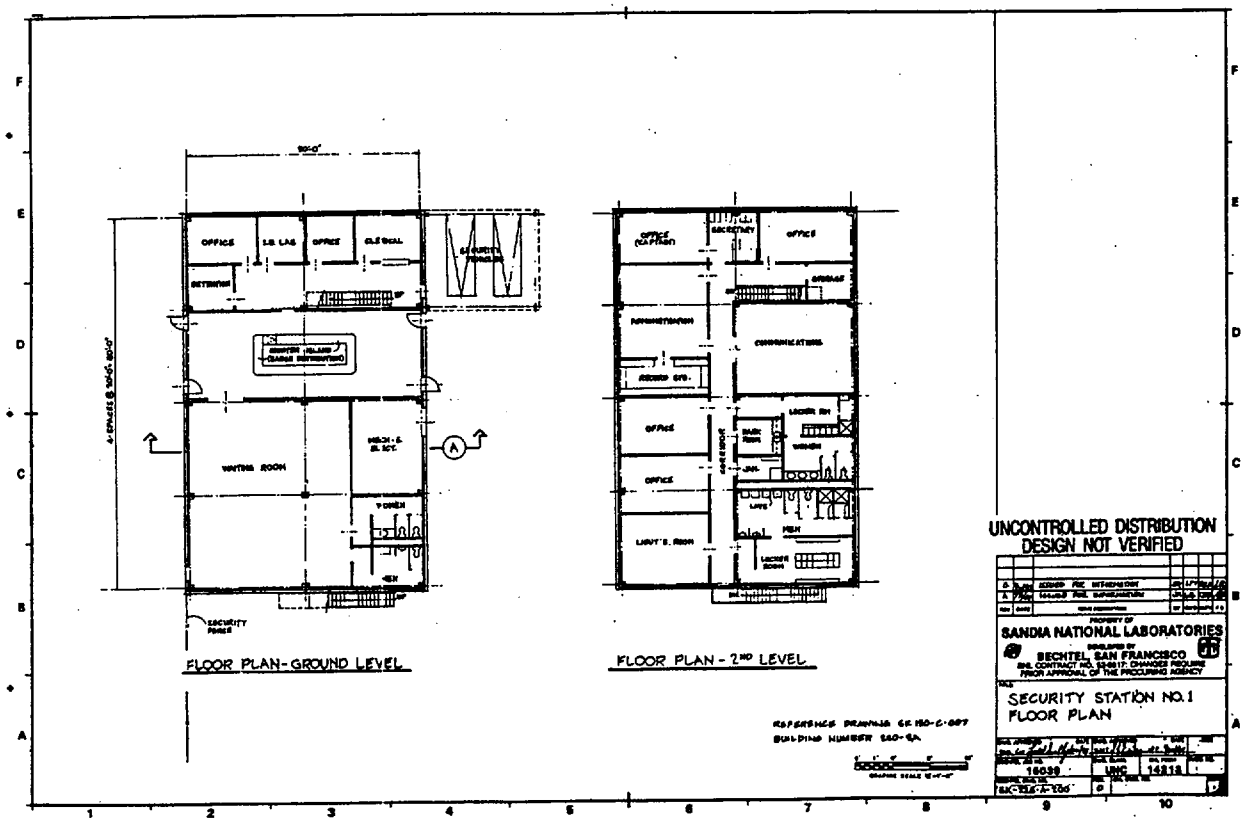
OFFICE
LIE LAB
OFFICE
CLERICAL
DETENTION
WAITING ROOM
WOMEN
MEN
SECURITY FENCE
FLOOR PLAN-GROUND LEVEL
OFFICE (CAPTAIN)
SECRETARY
OFFICE
STORAGE
INFORMATION
COMMUNICATIONS
RECORD STO.
OFFICE
LOCKER RM
SHOWER
OFFICE
LIGHT'S. ROOM
LOCKER ROOM
MEN
FLOOR PLAN - 2ND LEVEL
UNCONTROLLED DISTRIBUTION
DESIGN NOT VERIFIED
SANDIA NATIONAL LABORATORIES
BECHTEL SAN FRANCISCO
SECURITY STATION NO. 1
FLOOR PLAN
16039
UNC
14218

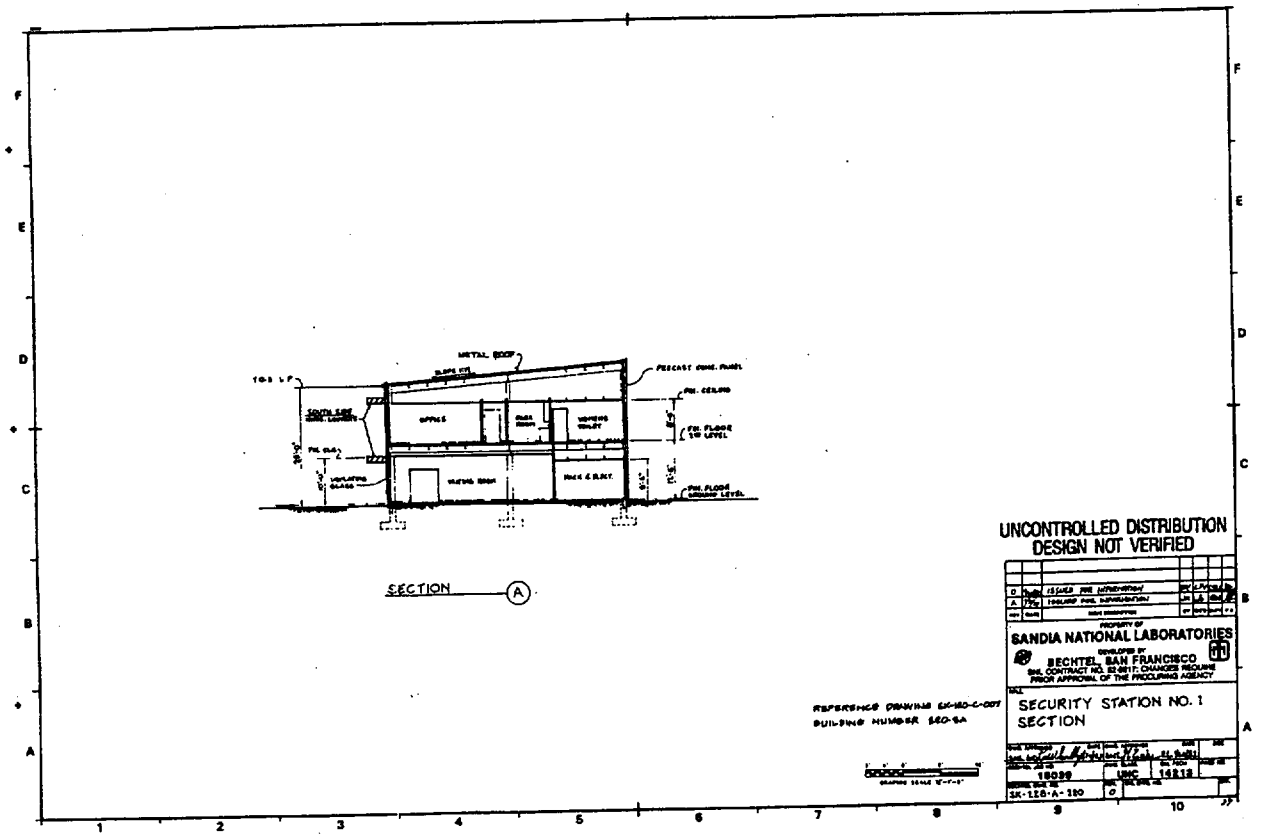
METAL ROOF
PRECAST CONC. PANEL
FIN. CEILING
FIN. FLOOR 1ST LEVEL
FIN. FLOOR GROUND LEVEL
OFFICE
VESTIBULE
SECTION A
UNCONTROLLED DISTRIBUTION
DESIGN NOT VERIFIED
SANDIA NATIONAL LABORATORIES
BECHTEL SAN FRANCISCO
SECURITY STATION NO. 1
SECTION
18039
UBC
14212
SK-128-A-120

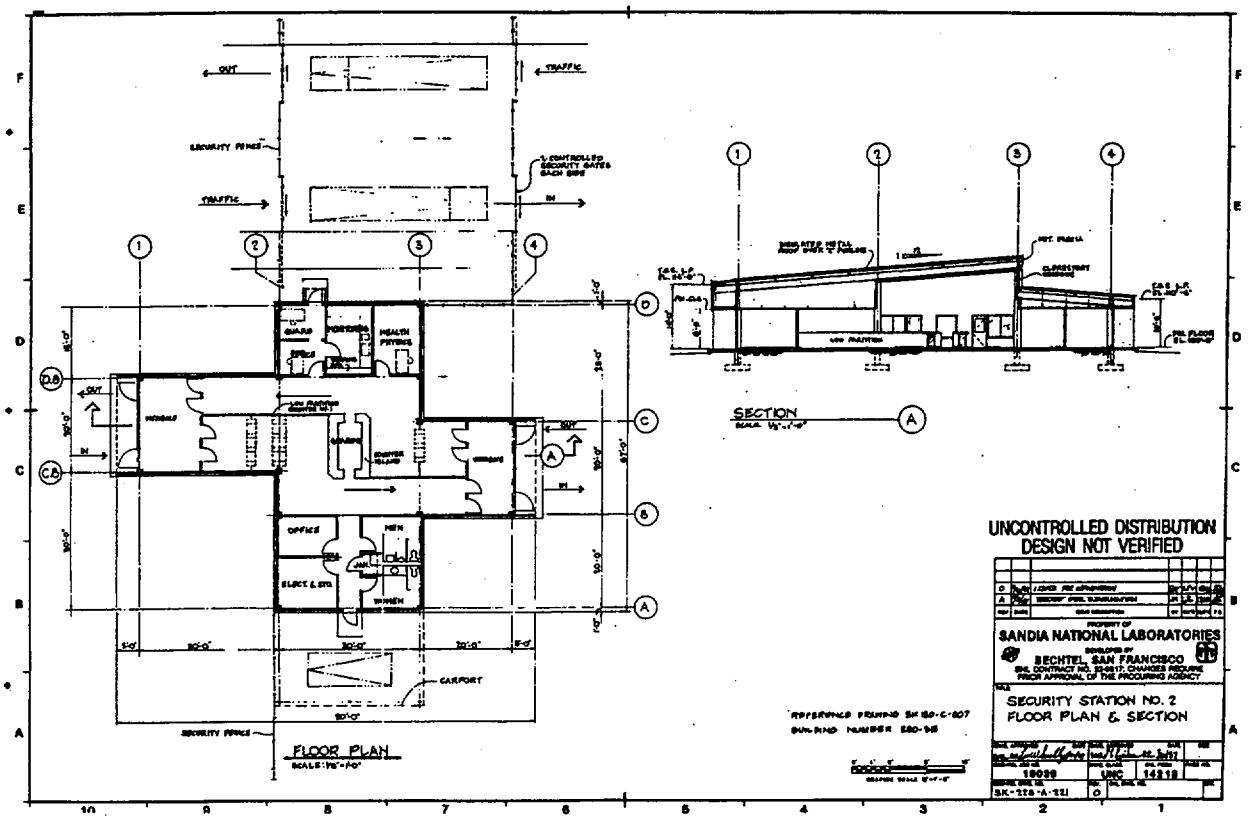
FLOOR PLAN
SECTION
UNCONTROLLED DISTRIBUTION
DESIGN NOT VERIFIED
SANDIA NATIONAL LABORATORIES
BECHTEL, SAN FRANCISCO
SECURITY STATION NO. 2
FLOOR PLAN & SECTION
CARPORT
OFFICE
MEN
WOMEN
HEALTH PHYSICS
GUARD
SECURITY FENCE
TRAFFIC
OUT
IN

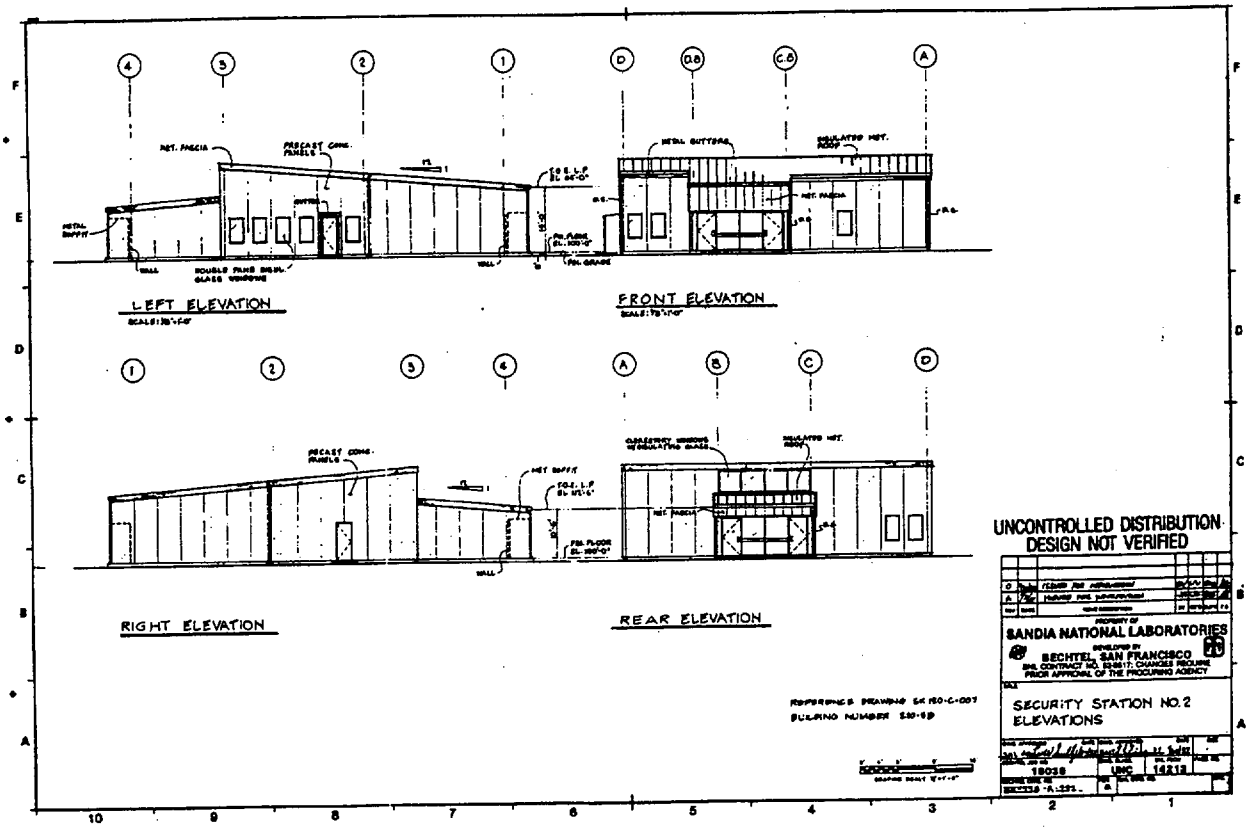
LEFT ELEVATION
FRONT ELEVATION
RIGHT ELEVATION
REAR ELEVATION
UNCONTROLLED DISTRIBUTION
DESIGN NOT VERIFIED
SANDIA NATIONAL LABORATORIES
BECHTEL, SAN FRANCISCO
SECURITY STATION NO. 2
ELEVATIONS
19038
UNC
14213

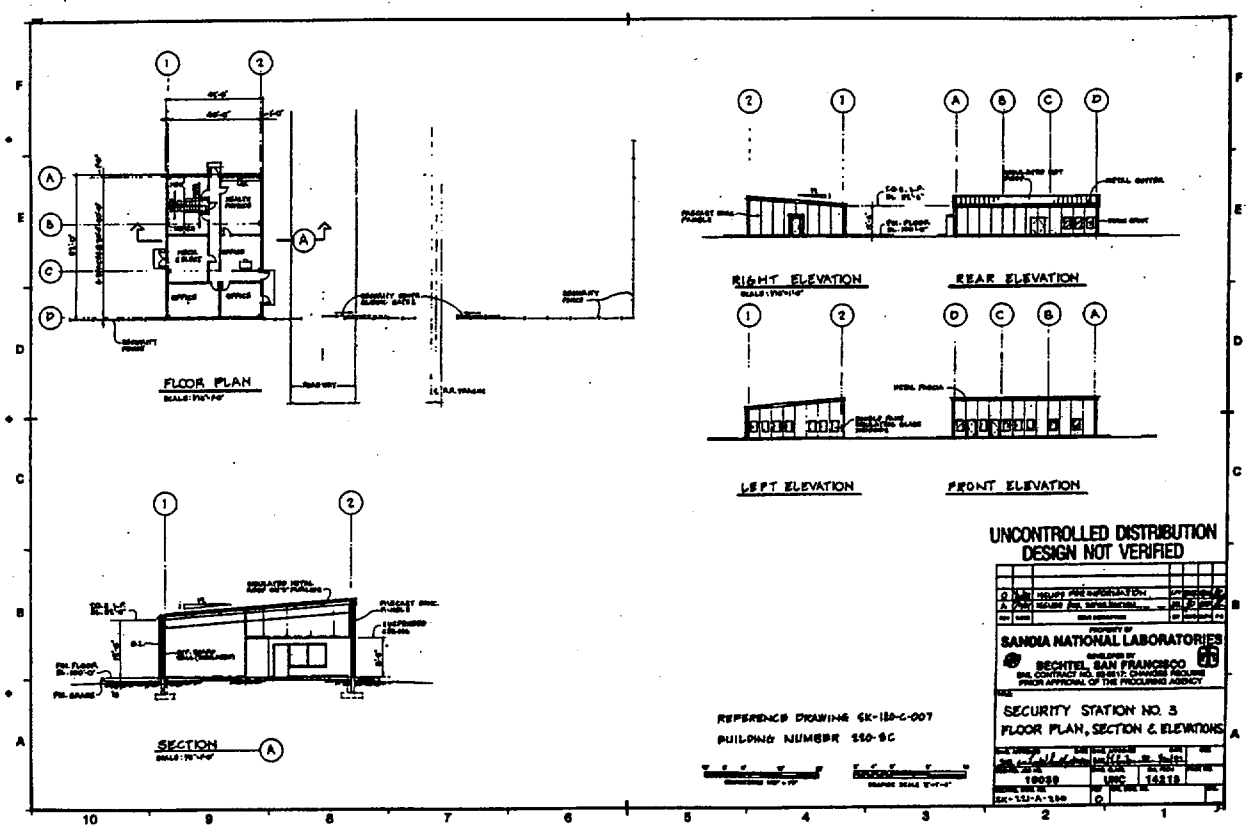
FLOOR PLAN
RIGHT ELEVATION
REAR ELEVATION
LEFT ELEVATION
FRONT ELEVATION
SECTION
UNCONTROLLED DISTRIBUTION
DESIGN NOT VERIFIED
SANDIA NATIONAL LABORATORIES
BECHTEL SAN FRANCISCO
SECURITY STATION NO. 3
FLOOR PLAN, SECTION & ELEVATIONS
REFERENCE DRAWING SK-150-C-007
BUILDING NUMBER 250-9C

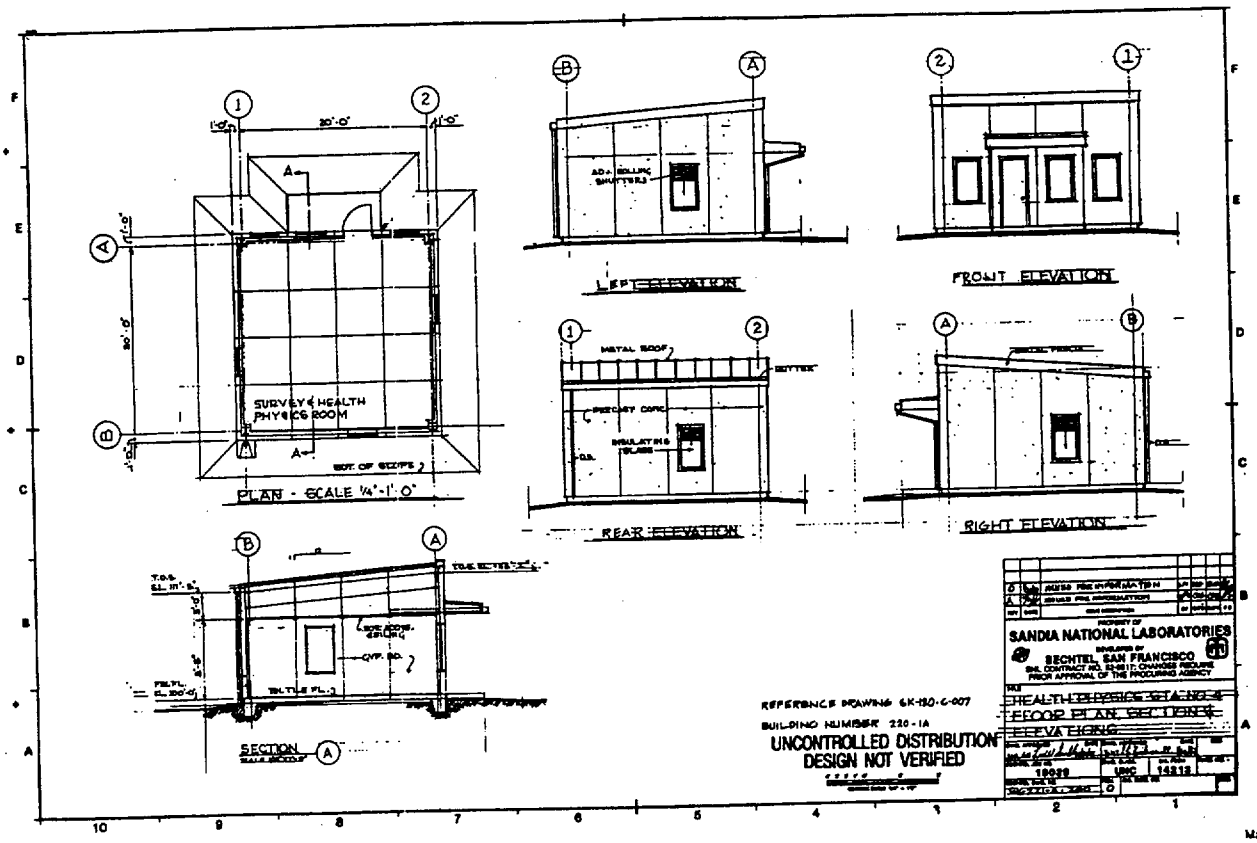
PLAN - SCALE 1/4"=1'-0"
SURVEY & HEALTH PHYSICS ROOM
LEFT ELEVATION
FRONT ELEVATION
REAR ELEVATION
RIGHT ELEVATION
SECTION
REFERENCE DRAWING 6K-150-C-007
BUILDING NUMBER 230-1A
UNCONTROLLED DISTRIBUTION
DESIGN NOT VERIFIED
SANDIA NATIONAL LABORATORIES
BECHTEL SAN FRANCISCO
HEALTH PHYSICS SITE NO. 4
FLOOR PLAN, SECTION & ELEVATIONS

March 1990

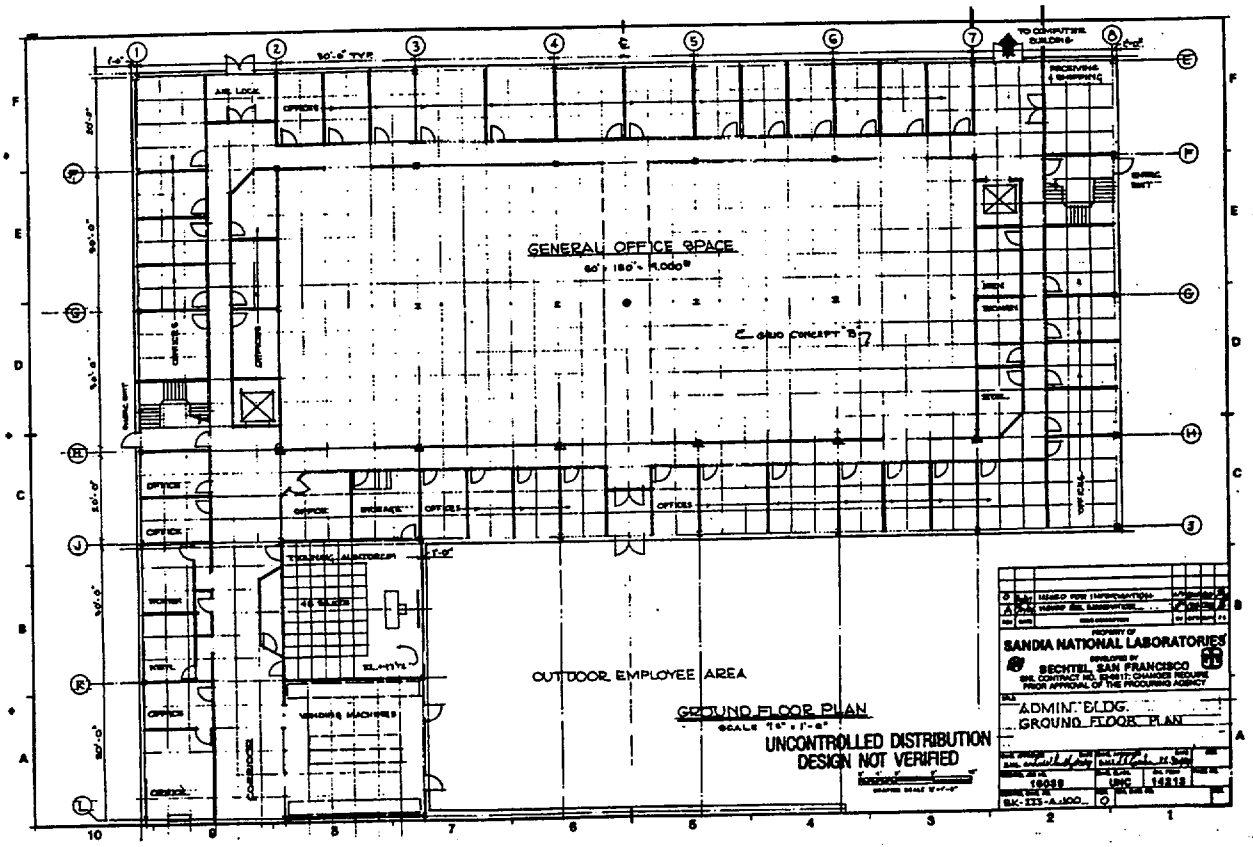
GENERAL OFFICE SPACE
OUTDOOR EMPLOYEE AREA
GROUND FLOOR PLAN
UNCONTROLLED DISTRIBUTION
DESIGN NOT VERIFIED
SANDIA NATIONAL LABORATORIES
BECHTEL SAN FRANCISCO
ADMIN. BLDG.
GROUND FLOOR PLAN

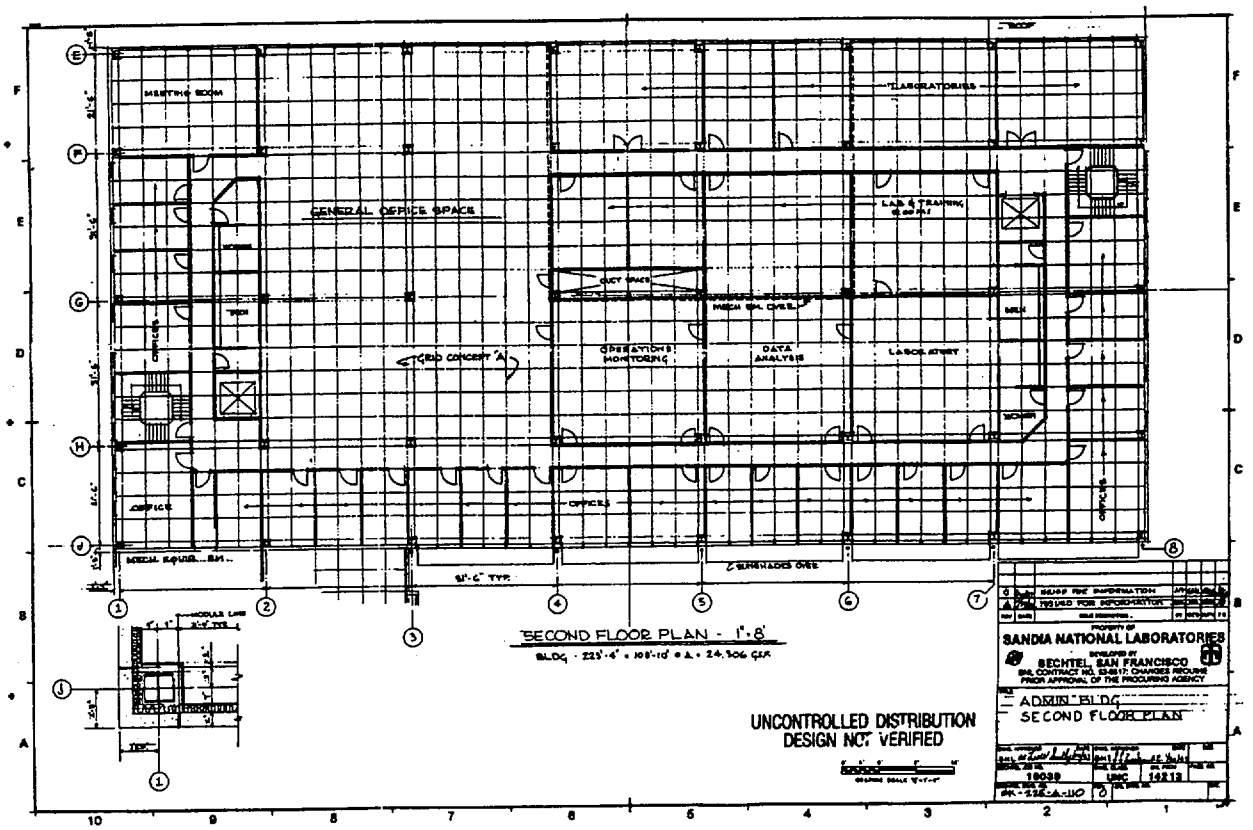
MEETING ROOM
LABORATORIES
GENERAL OFFICE SPACE
LAB & TRAINING
DUCT SPACE
MECH EQ. OVER
MECH
OFFICES
GRID CONCEPT 'A'
OPERATIONS MONITORING
DATA ANALYSIS
LABORATORY
WOMEN
OFFICE
MECH. EQUIP. BELOW
51'-6" TYP.
SUNSHADES OVER
SECOND FLOOR PLAN - 1"=8'
BLDG. 223'-4" x 108'-10" = A = 24,306 GSF
UNCONTROLLED DISTRIBUTION
DESIGN NOT VERIFIED
PROPERTY OF
SANDIA NATIONAL LABORATORIES
DEVELOPED BY
BECHTEL SAN FRANCISCO
SNL CONTRACT NO. 53-0117. CHANGES REQUIRE PRIOR APPROVAL OF THE PROCURING AGENCY
ADMIN BLDG
SECOND FLOOR PLAN
19039
UNC
19213
SK-SSE-A-110

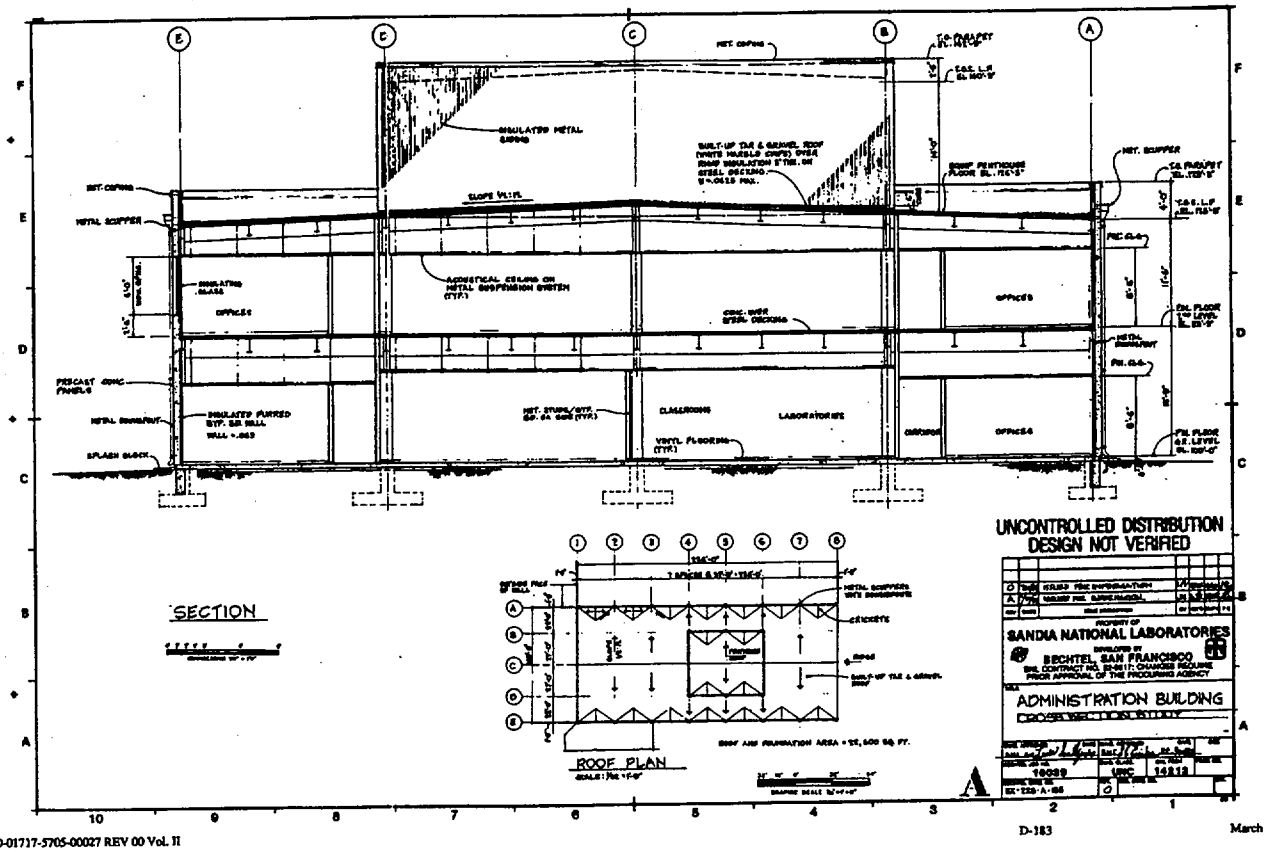
SECTION
ROOF PLAN
UNCONTROLLED DISTRIBUTION
DESIGN NOT VERIFIED
SANDIA NATIONAL LABORATORIES
BECHTEL SAN FRANCISCO
ADMINISTRATION BUILDING
OFFICES
LABORATORIES
CLASSROOMS
CORRIDOR
INSULATED METAL SIDING
ACOUSTICAL CEILING ON METAL SUSPENSION SYSTEM
CONC. OVER STEEL DECKING
PRECAST CONC. PANELS
METAL SCUPPER
METAL COPING
SLOPE VARIES

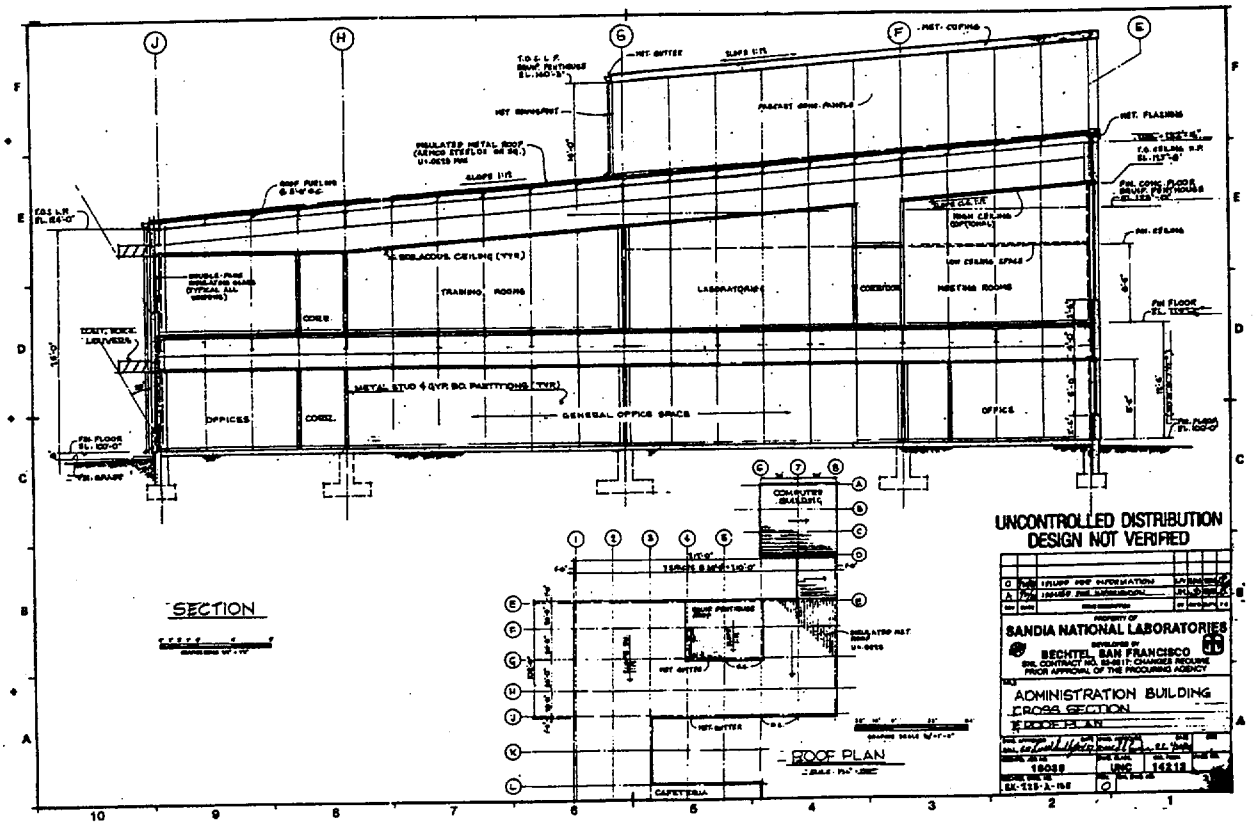
SECTION
ROOF PLAN
UNCONTROLLED DISTRIBUTION
DESIGN NOT VERIFIED
SANDIA NATIONAL LABORATORIES
BECHTEL SAN FRANCISCO
ADMINISTRATION BUILDING
CROSS SECTION
ROOF PLAN
TRAINING ROOMS
LABORATORIES
CORRIDOR
MEETING ROOMS
OFFICES
GENERAL OFFICE SPACE
CAFETERIA
COMPUTER BUILDING

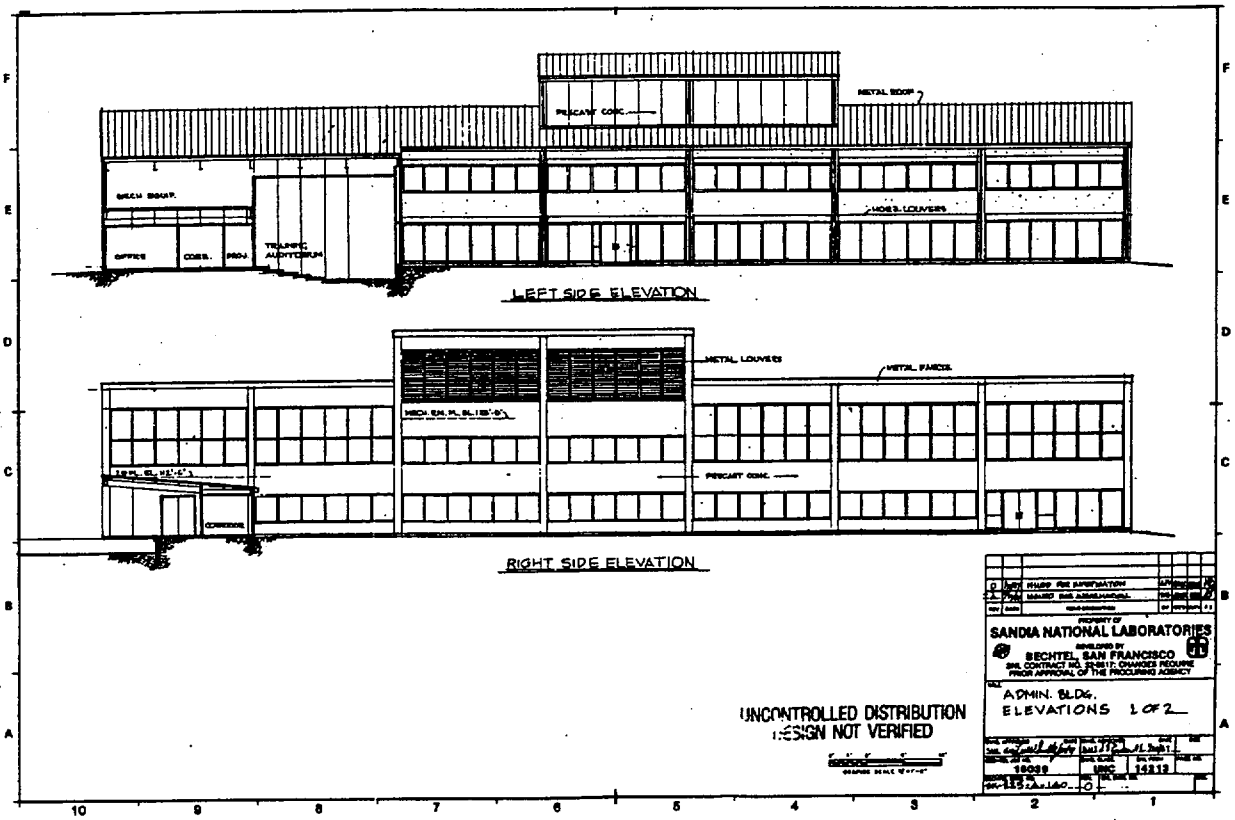
METAL ROOF
PRECAST CONC.
MECH. EQUIP.
OFFICE
CORR.
PROJ.
TRAINING AUDITORIUM
HORIZ. LOUVERS
LEFT SIDE ELEVATION
METAL LOUVERS
METAL PANELS
PRECAST CONC.
CORRIDOR
RIGHT SIDE ELEVATION
UNCONTROLLED DISTRIBUTION
DESIGN NOT VERIFIED
PROPERTY OF
SANDIA NATIONAL LABORATORIES
DEVELOPED BY
BECHTEL, SAN FRANCISCO
ADMIN. BLDG.
ELEVATIONS 1 OF 2
18039
UNC
14213

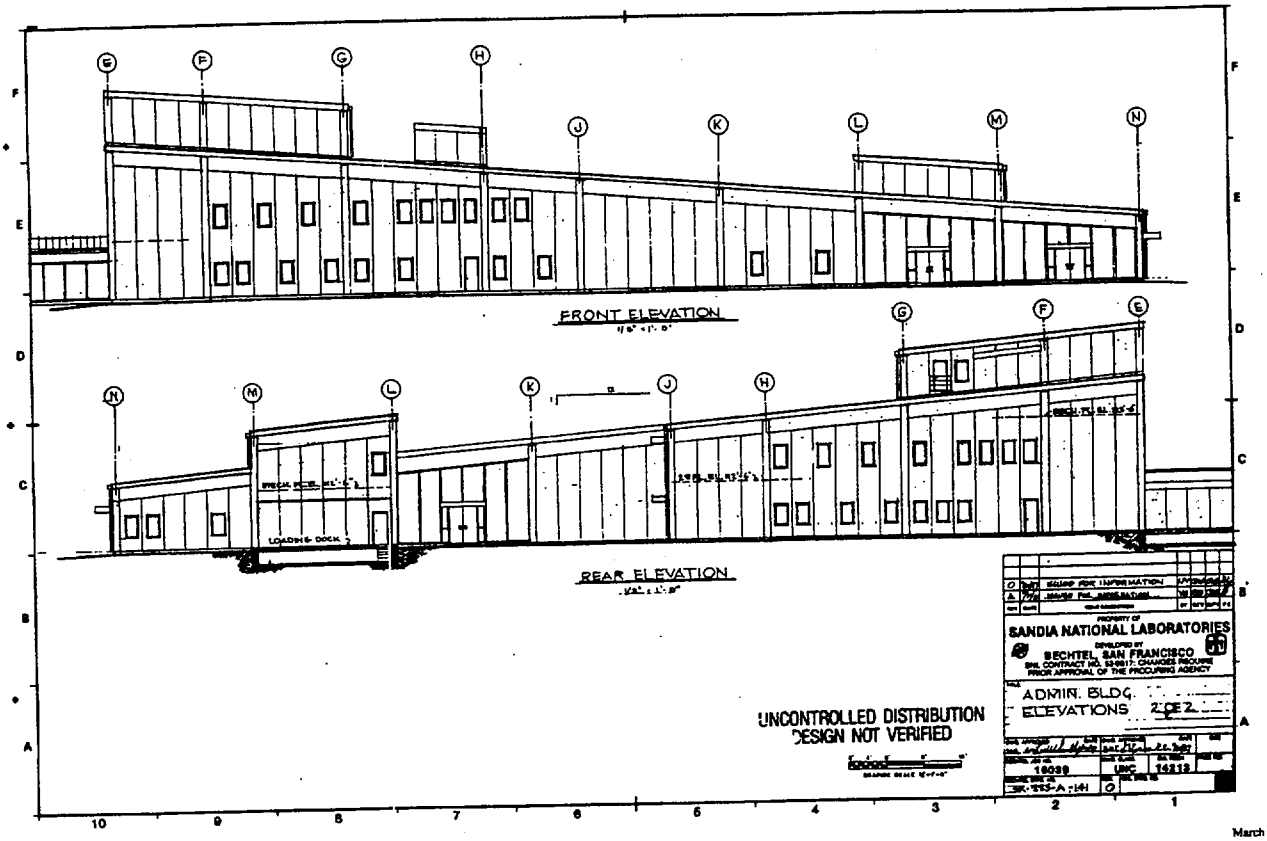
FRONT ELEVATION
REAR ELEVATION
LOADING DOCK 2
UNCONTROLLED DISTRIBUTION
DESIGN NOT VERIFIED
SANDIA NATIONAL LABORATORIES
BECHTEL SAN FRANCISCO
ADMIN. BLDG.
ELEVATIONS
2 OF 2

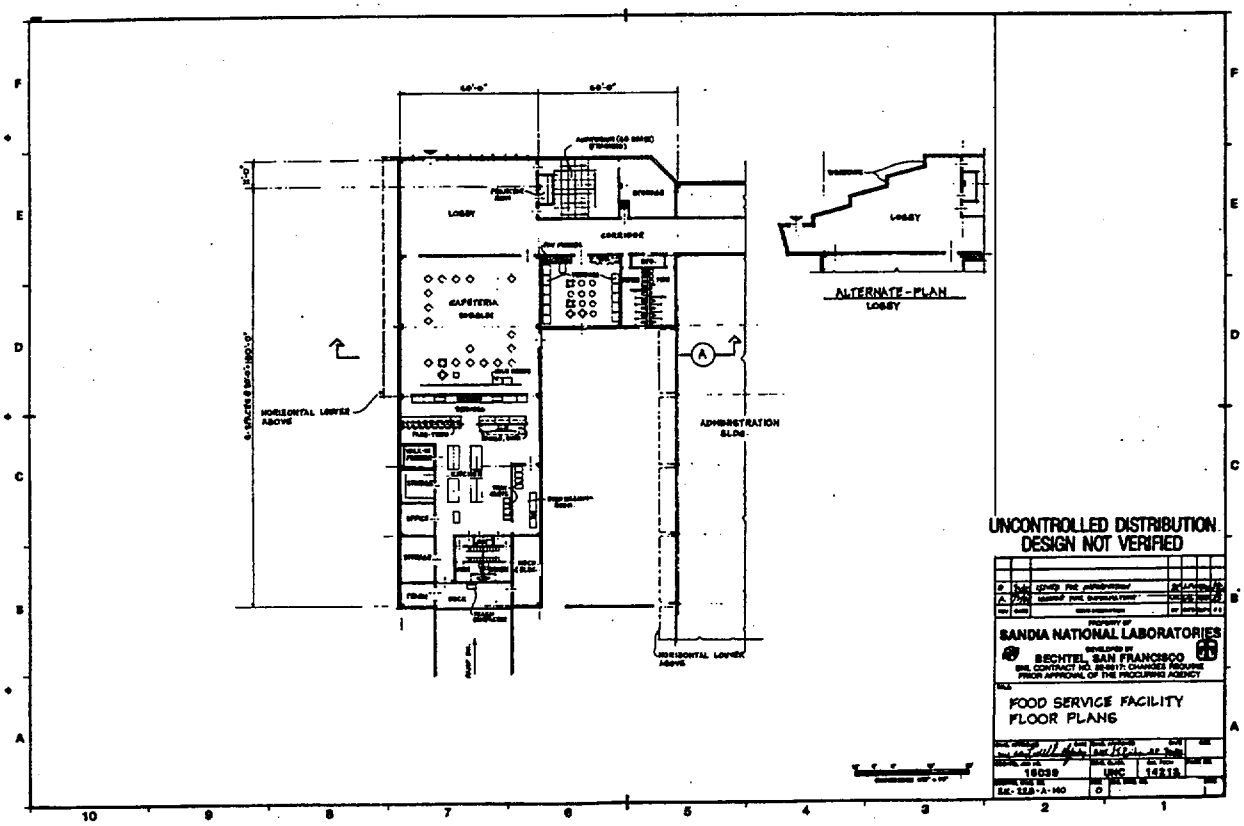
LOBBY
CAFETERIA
HORIZONTAL LOUVER ABOVE
ADMINISTRATION BLDG.
ALTERNATE - PLAN
LOBBY
UNCONTROLLED DISTRIBUTION
DESIGN NOT VERIFIED
SANDIA NATIONAL LABORATORIES
BECHTEL SAN FRANCISCO
FOOD SERVICE FACILITY
FLOOR PLANS
16038
UNC
14219

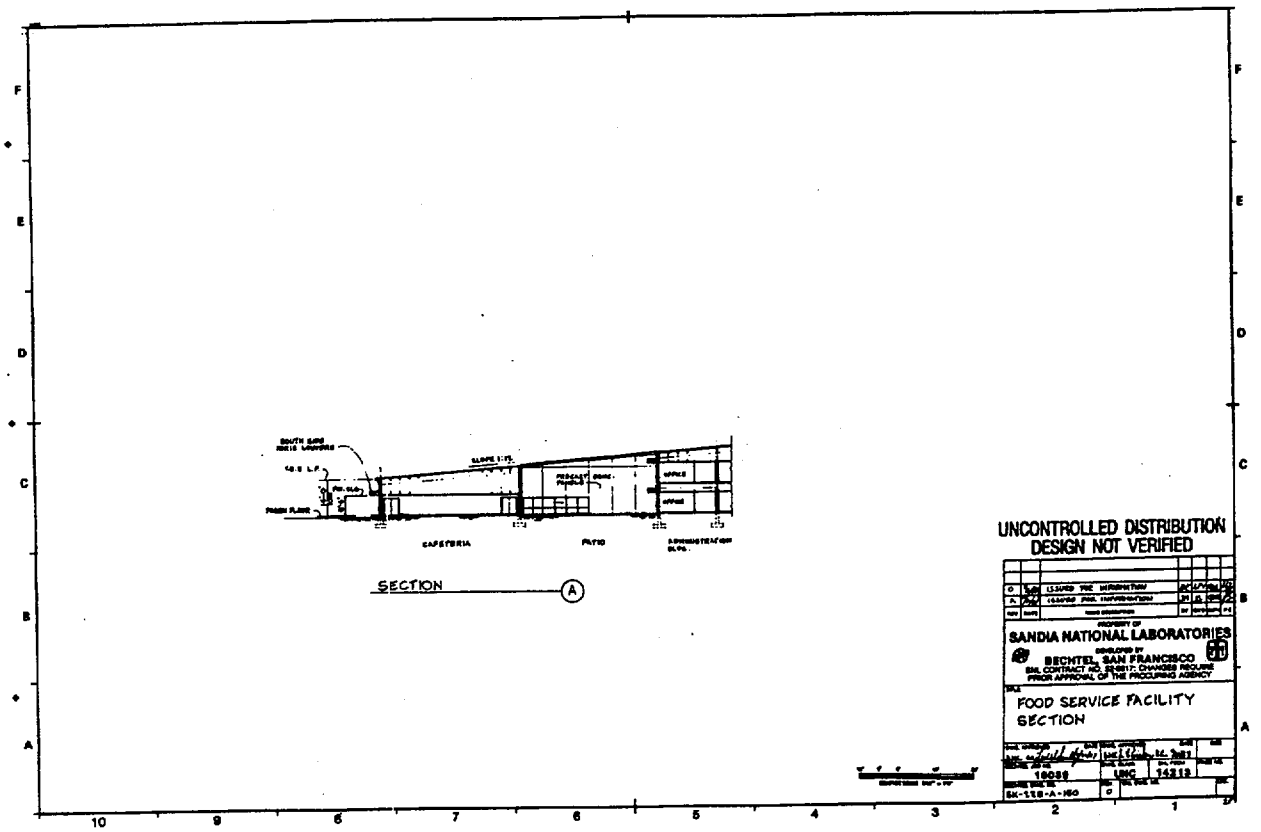
CAFETERIA
PATIO
SECTION
A
UNCONTROLLED DISTRIBUTION
DESIGN NOT VERIFIED
SANDIA NATIONAL LABORATORIES
BECHTEL, SAN FRANCISCO
FOOD SERVICE FACILITY
SECTION
16059
UNC
14318
SK-128-A-150

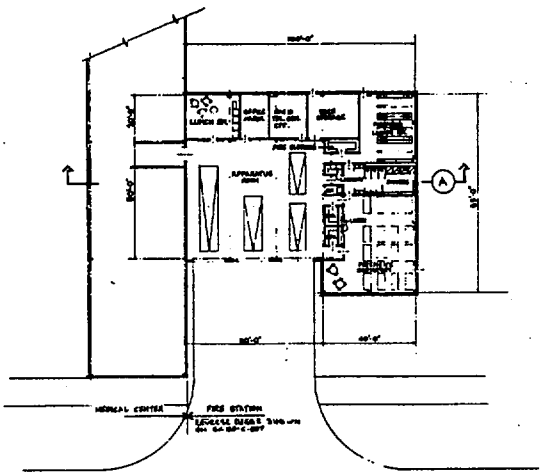

UNCONTROLLED DISTRIBUTION
DESIGN NOT VERIFIED

PROPERTY OF
SANDIA NATIONAL LABORATORIES

DEVELOPED BY
BECHTEL, SAN FRANCISCO
SNL CONTRACT NO. [illegible] CHANGES REQUIRE PRIOR APPROVAL OF THE PROCURING AGENCY

FIRE STATION
FLOOR PLAN

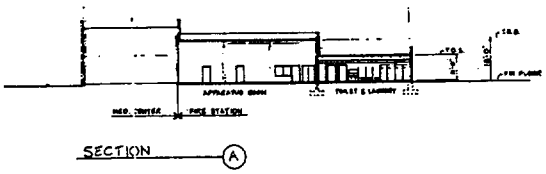

UNCONTROLLED DISTRIBUTION
DESIGN NOT VERIFIED

PROPERTY OF
SANDIA NATIONAL LABORATORIES
DESIGNED BY
BECHTEL, SAN FRANCISCO
SNL CONTRACT NO. 53-0617; CHANGES REQUIRE
PRIOR APPROVAL OF THE PROCURING AGENCY

FIRE STATION
SECTION

19039
UNC
142.12

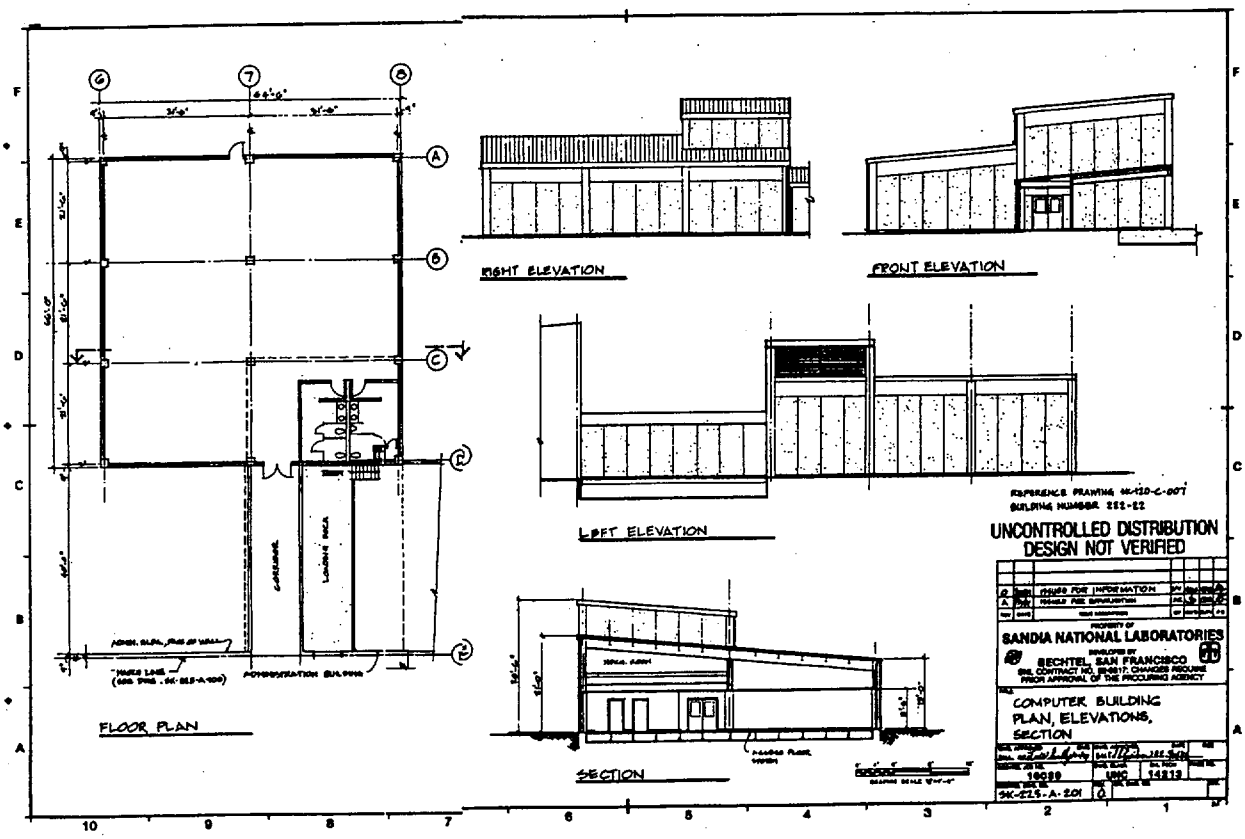
FLOOR PLAN
RIGHT ELEVATION
FRONT ELEVATION
LEFT ELEVATION
SECTION
UNCONTROLLED DISTRIBUTION
DESIGN NOT VERIFIED
SANDIA NATIONAL LABORATORIES
BECHTEL SAN FRANCISCO
COMPUTER BUILDING
PLAN, ELEVATIONS,
SECTION

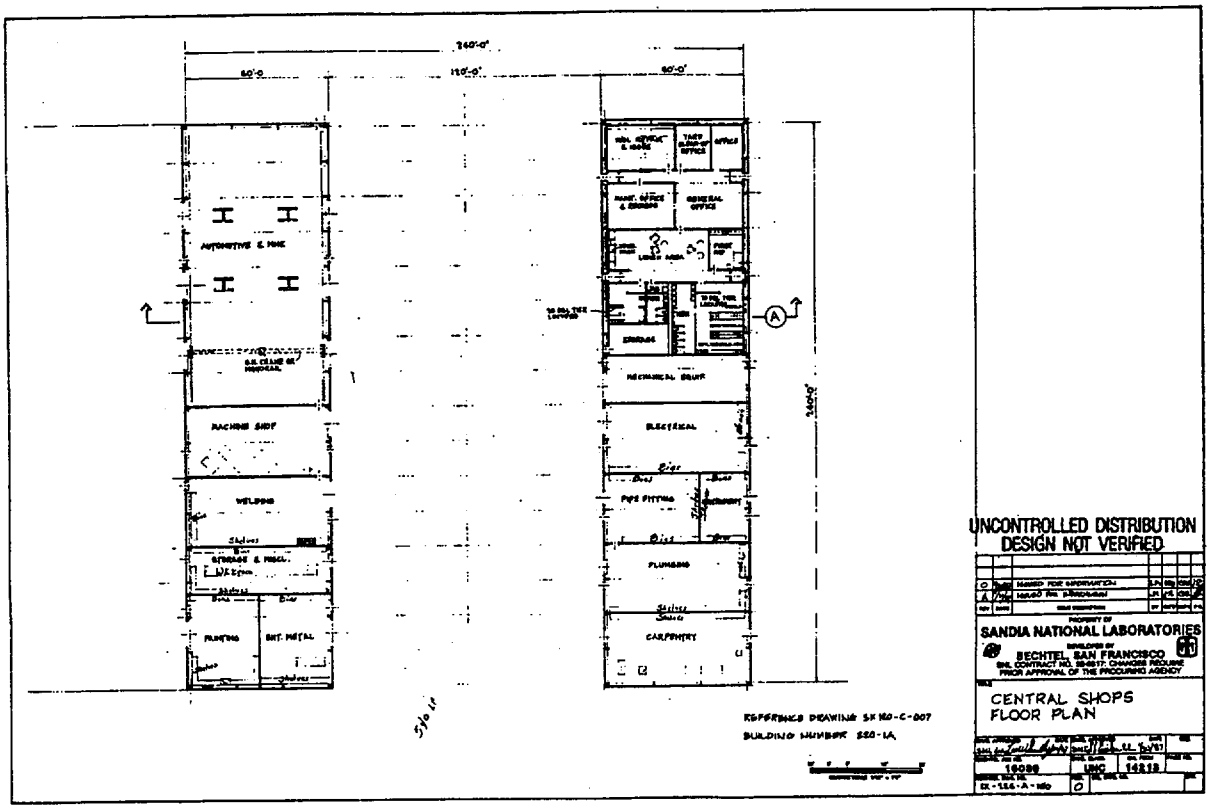
AUTOMOTIVE & MAC
MACHINE SHOP
WELDING
STORAGE & MISC.
PAINTING
SHT. METAL
MECHANICAL DRAFT
ELECTRICAL
PIPE FITTING
PLUMBING
CARPENTRY
GENERAL OFFICE
UNCONTROLLED DISTRIBUTION
DESIGN NOT VERIFIED
SANDIA NATIONAL LABORATORIES
BECHTEL SAN FRANCISCO
CENTRAL SHOPS
FLOOR PLAN

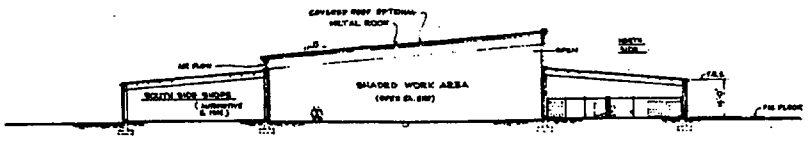

SECTION A

REFERENCE DRAWING

BUILDING NUMBER

UNCONTROLLED DISTRIBUTION
DESIGN NOT VERIFIED

PROPERTY OF
SANDIA NATIONAL LABORATORIES
DEVELOPED BY
BECHTEL SAN FRANCISCO
PRIOR APPROVAL OF THE PROCURING AGENCY

CENTRAL SHOPS
SECTION

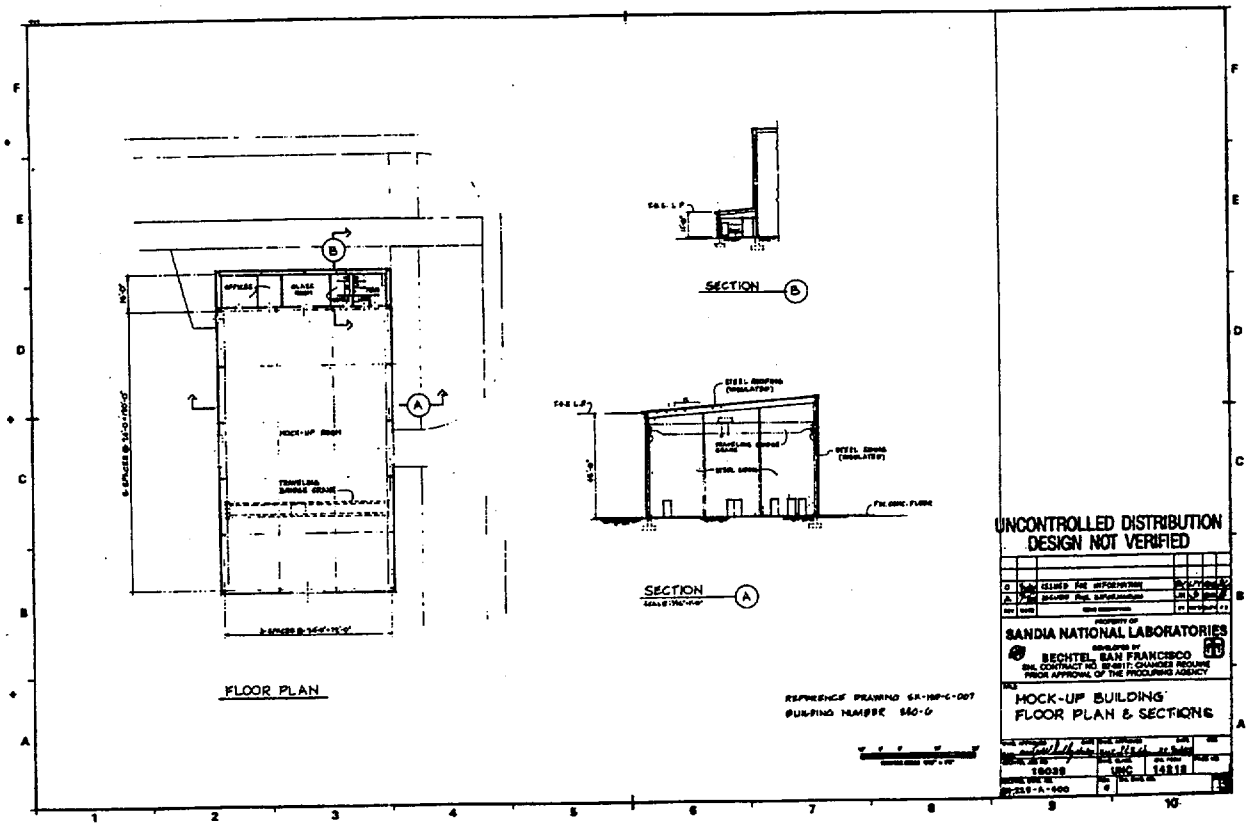
FLOOR PLAN
SECTION B
SECTION A
REFERENCE DRAWING
BUILDING NUMBER 860-6
UNCONTROLLED DISTRIBUTION
DESIGN NOT VERIFIED
SANDIA NATIONAL LABORATORIES
BECHTEL SAN FRANCISCO
MOCK-UP BUILDING
FLOOR PLAN & SECTIONS

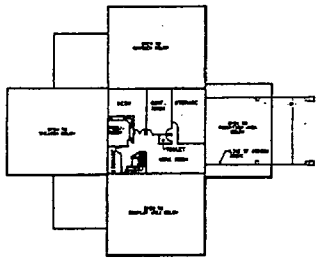

SECOND LEVEL FLOOR PLAN

NORTH ELEVATION

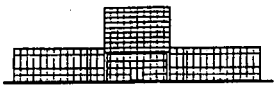

EAST ELEVATION

SOUTH ELEVATION

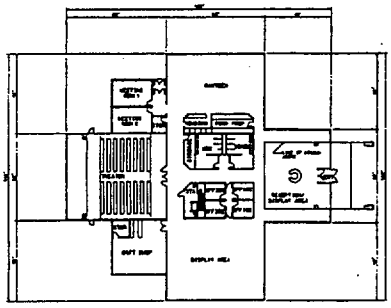

GROUND LEVEL FLOOR PLAN

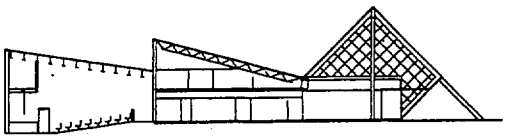

LONGITUDINAL SECTION

Volume II. C

MRS/MPC FACILITY
VISITORS & MEDIA CENTER
GENERAL ARRANGEMENT
PLANS, SECTION & ELEV.

FIGURE: 4.2.2.21-G1

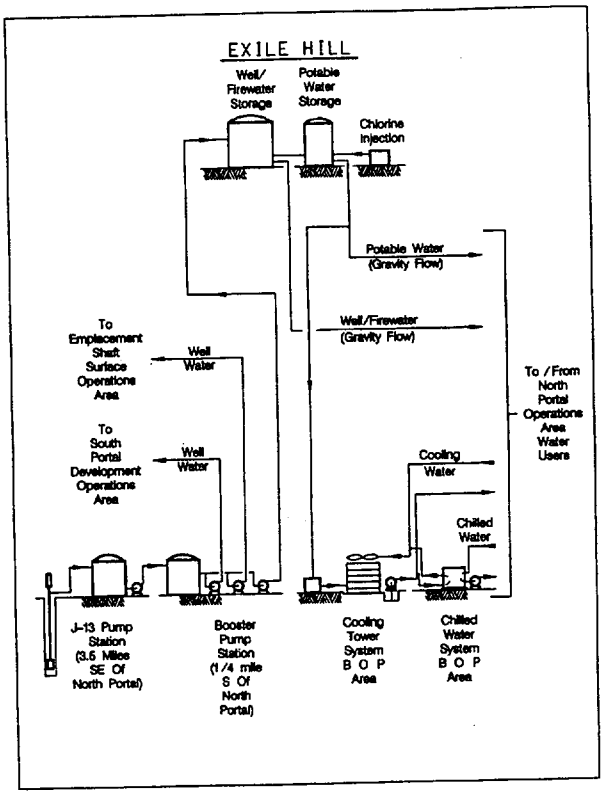

Figure 7.2.8–1. North Portal Water Systems

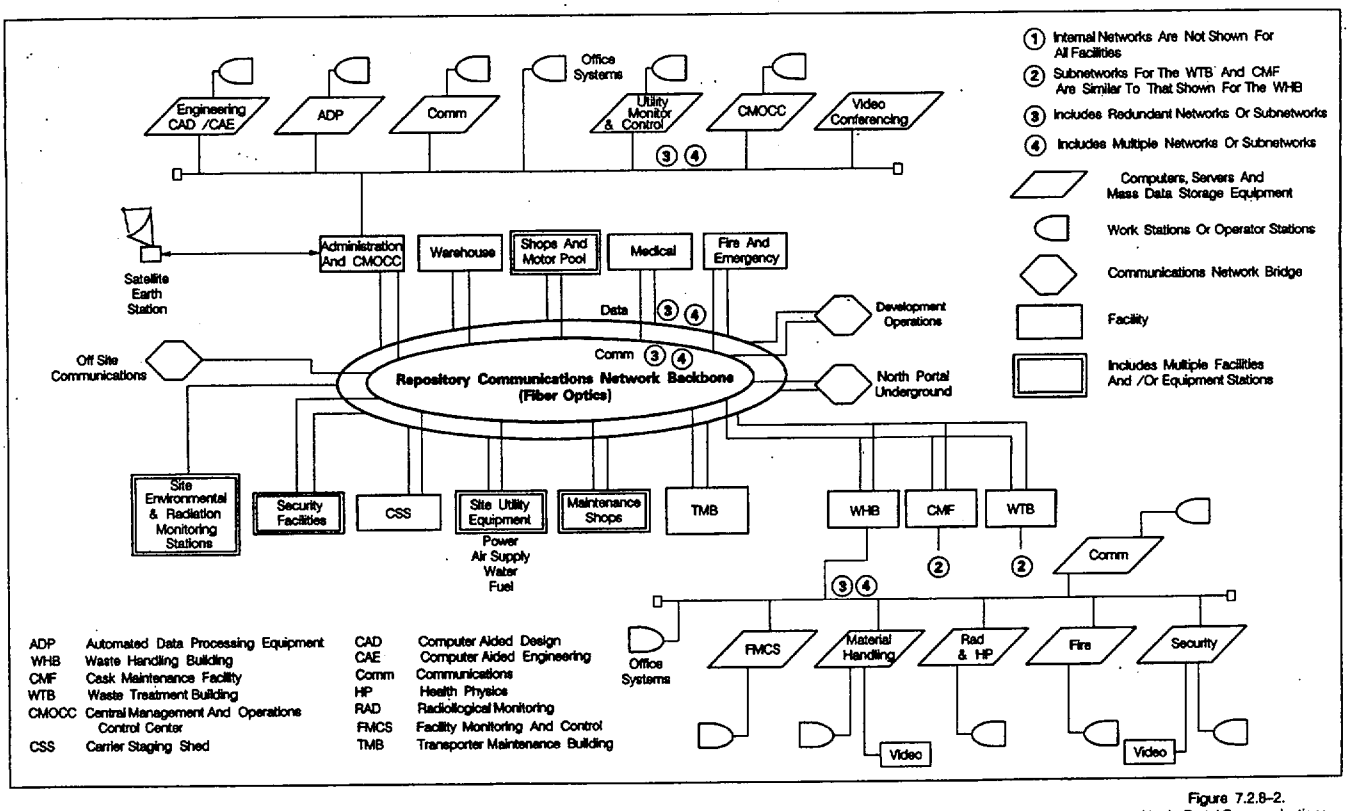

Figure 7.2.8-2.
North Portal Communications Monitoring And Controls System

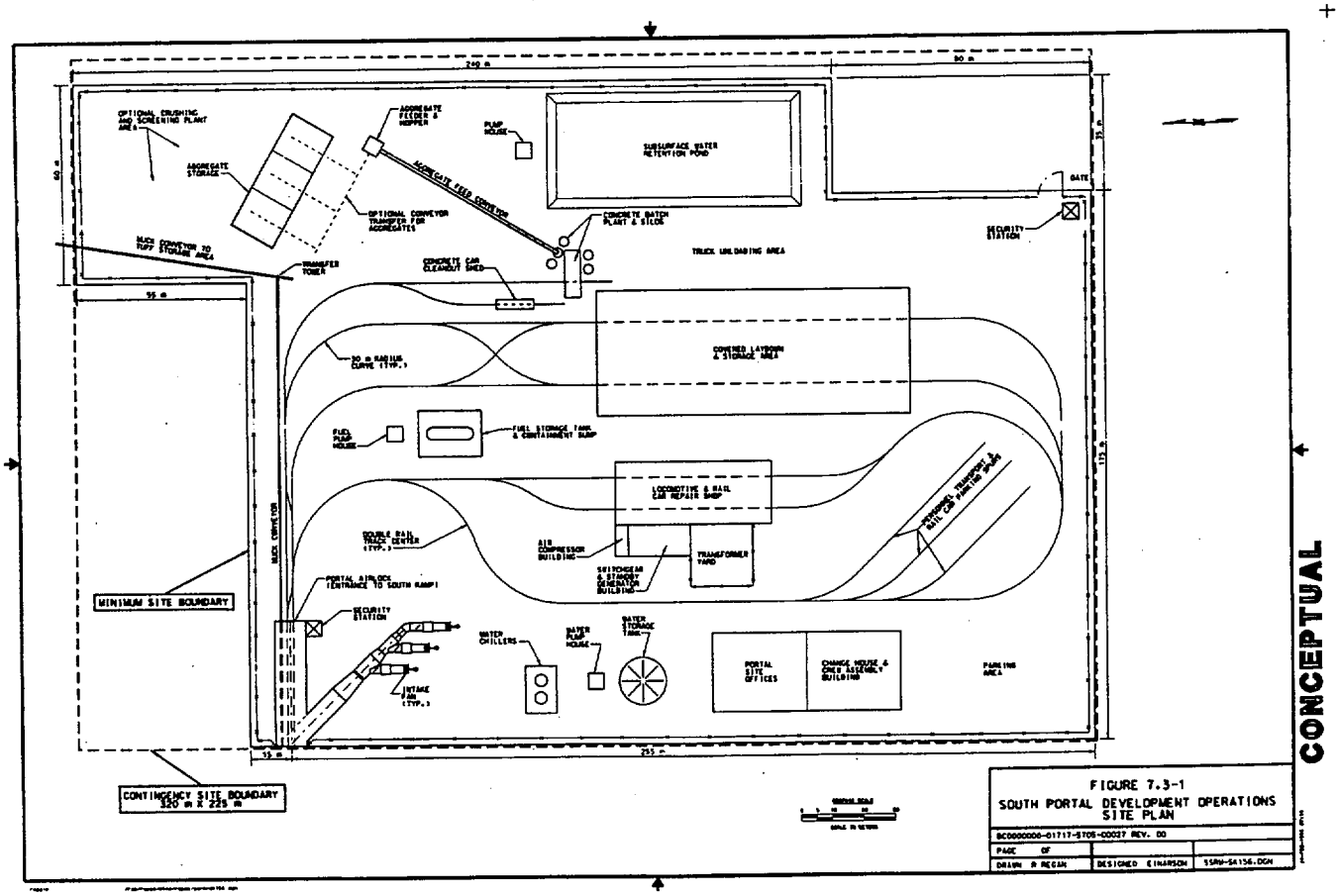
240 m
90 m
OPTIONAL CRUSHING AND SCREENING PLANT AREA
AGGREGATE STORAGE
AGGREGATE FEEDER & HOPPER
AGGREGATE FEED CONVEYOR
OPTIONAL CONVEYOR TRANSFER FOR AGGREGATES
MUCK CONVEYOR TO TUFF STORAGE AREA
TRANSFER TOWER
PUMP HOUSE
SUBSURFACE WATER RETENTION POND
CONCRETE BATCH PLANT & SILOS
TRUCK UNLOADING AREA
GATE
SECURITY STATION
CONCRETE CAR CLEANOUT SHED
95 m
30 m RADIUS CURVE (TYP.)
COVERED LAYDOWN & STORAGE AREA
FUEL PUMP HOUSE
FUEL STORAGE TANK & CONTAINMENT SUMP
LOCOMOTIVE & RAIL CAR REPAIR SHOP
DOUBLE RAIL TRACK CENTER (TYP.)
AIR COMPRESSOR BUILDING
SWITCHGEAR & STANDBY GENERATOR BUILDING
TRANSFORMER YARD
TEMPORARY & TEMPORARY RAIL CAR PARKING
MUCK CONVEYOR
MINIMUM SITE BOUNDARY
PORTAL AIRLOCK (ENTRANCE TO SOUTH RAMP)
SECURITY STATION
WATER CHILLERS
WATER PUMP HOUSE
WATER STORAGE TANK
INTAKE FAN (TYP.)
PORTAL SITE OFFICES
CHANGE HOUSE & CHEM ASSAYS BUILDING
PARKING AREA
175 m
55 m
255 m
CONTINGENCY SITE BOUNDARY 320 m X 225 m
CONCEPTUAL
FIGURE 7.3-1
SOUTH PORTAL DEVELOPMENT OPERATIONS SITE PLAN
B00000000-01717-5705-00027 REV. 00
PAGE OF
DRAWN R REGAN
DESIGNED EINARSON
SSRM-S4156.DGN

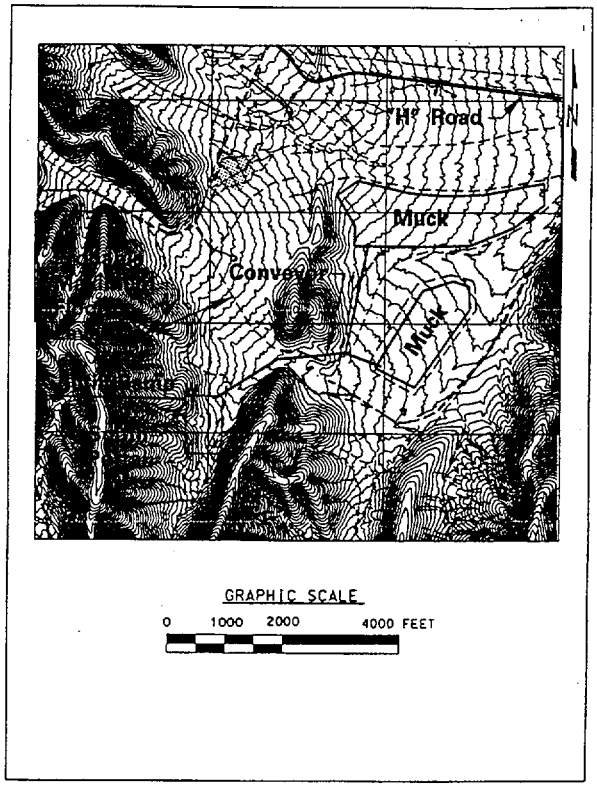

Figure 7.3–2. South Portal Development Operations
Muck Storage And Transfer

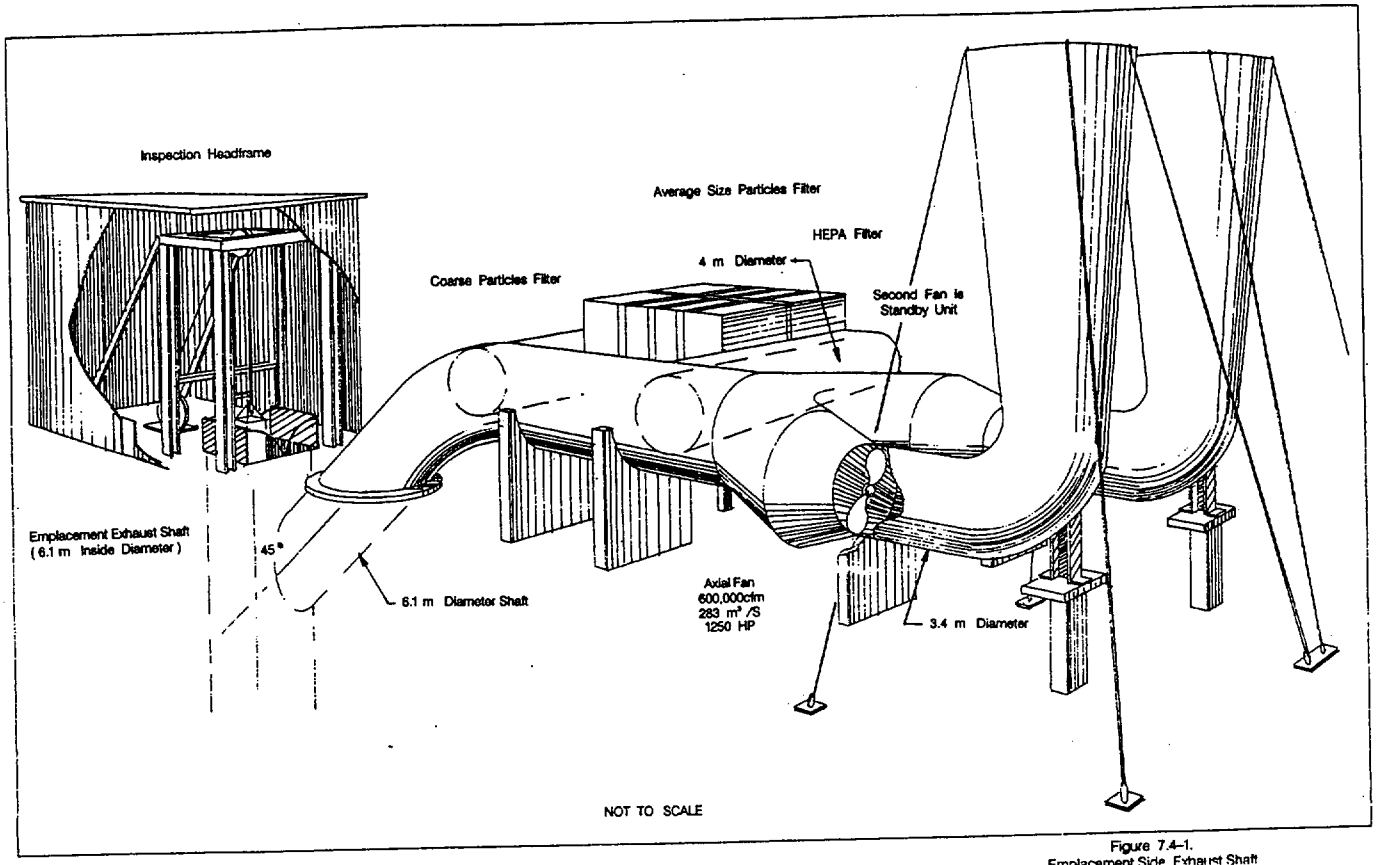

Figure 7.4-1.
Emplacement Side Exhaust Shaft
Fans & HEPA Filters Schematic

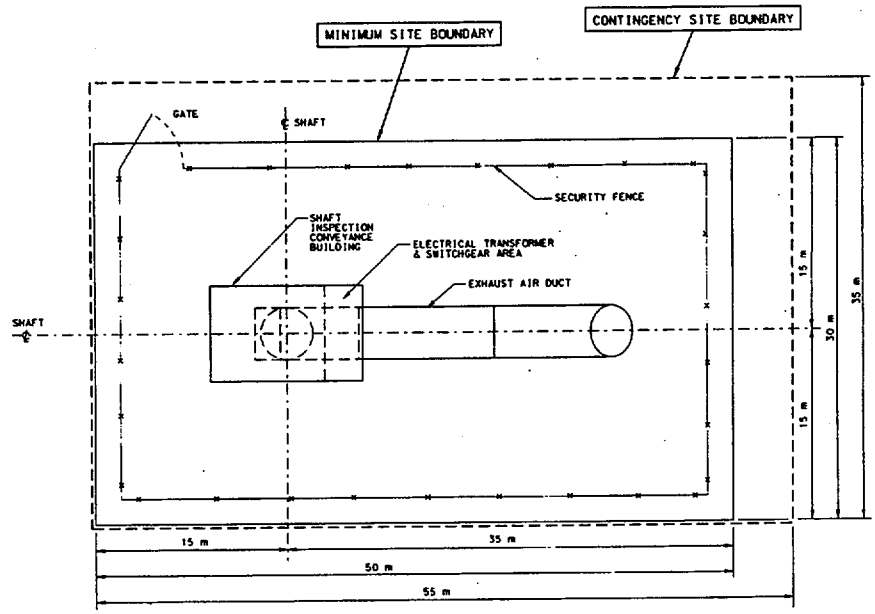

Figure 7.5-1
DEVELOPMENT SHAFT SURFACE OPERATIONS-SITE PLAN

B00000000-01717-5705-00005, REV.00		
PAGE OF		
DRAWN R REGAN	DESIGN EINARSON	SSPM-SK063.DGN

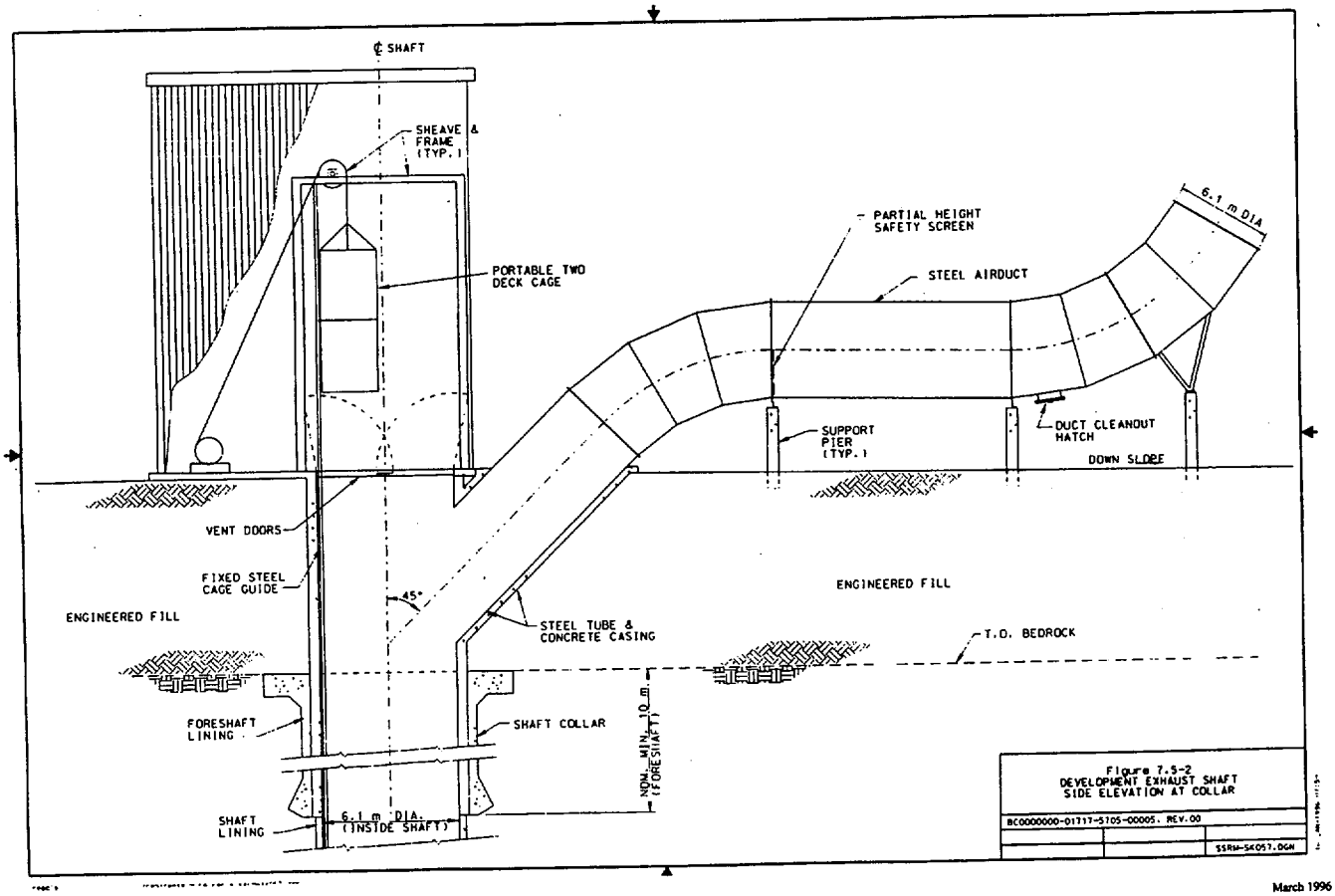
℄ SHAFT
SHEAVE & FRAME (TYP.)
PORTABLE TWO DECK CAGE
PARTIAL HEIGHT SAFETY SCREEN
STEEL AIRDUCT
6.1 m DIA
SUPPORT PIER (TYP.)
DUCT CLEANOUT HATCH
DOWN SLOPE
VENT DOORS
FIXED STEEL CAGE GUIDE
ENGINEERED FILL
45°
STEEL TUBE & CONCRETE CASING
ENGINEERED FILL
T.O. BEDROCK
FORESHAFT LINING
SHAFT COLLAR
NOM. MIN. 10 m (FORESHAFT)
SHAFT LINING
6.1 m DIA. (INSIDE SHAFT)
Figure 7.5-2
DEVELOPMENT EXHAUST SHAFT
SIDE ELEVATION AT COLLAR
BC00000000-01717-5705-00005, REV.00
SSRM-SK057.DGN