August 31, 2000

UNITED STATES NUCLEAR REGULATORY COMMISSION
BOILING WATER REACTOR GENERIC FUNDAMENTALS EXAMINATION
JULY 2000--FORM A (with answers and proofs)

Please Print

Name: _____

Facility: _____

Docket No.: _____

Start Time: _____ Stop Time: _____

INSTRUCTIONS TO APPLICANT

Answer all the test items using the answer sheet provided. Each item has equal point value. A score of at least 80% is required to pass this portion of the written licensing examination. All examination papers will be collected 3.0 hours after the examination starts. This examination applies to a typical boiling water reactor (BWR) power plant.

SECTION	QUESTIONS	% OF TOTAL	SCORE
COMPONENTS	1 - 44		
REACTOR THEORY	45 - 72		
THERMODYNAMICS	73 - 100		
TOTALS	100		

All work done on this examination is my own. I have neither given nor received aid.

_____
Applicant's Signature

RULES AND GUIDELINES FOR THE GENERIC FUNDAMENTALS EXAMINATION

During the administration of this examination the following rules apply:

NOTE: The generic term "control rod" refers to the length of neutron absorber material that can be positioned by the operator to change core reactivity.

1. Print your name in the blank provided on the cover sheet of the examination.

2. Fill in the name of your facility.

3. Fill in your individual docket number.

4. Fill in your start and stop times at the appropriate time.

5. Two aids are provided for your use during the examination:

   (1) An equations and conversions sheet contained within the examination copy, and

   (2) Steam tables provided by your proctor.

6. Place your answers on the answer sheet provided. Credit will only be given for answers properly marked on this sheet. Follow the instructions for filling out the answer sheet.

7. Scrap paper will be provided for calculations.

8. Cheating on the examination will result in the automatic forfeiture of this examination. Cheating could also result in severe penalties.

9. Restroom trips are limited. Only **ONE** examinee may leave the room at a time. In order to avoid the appearance or possibility of cheating, avoid all contact with anyone outside of the examination room.

10. After you have completed the examination, sign the statement on the cover sheet indicating that the work is your own and you have not received or been given any assistance in completing the examination.

11. Turn in your examination materials, answer sheet on top, followed by the examination booklet, then examination aids - steam table booklets, handouts, and scrap paper used during the examination.

12. After turning in your examination materials, leave the examination area, as defined by the proctor. If after leaving you are found in the examination area while the examination is in progress, your examination may be forfeited.

GENERIC FUNDAMENTALS EXAMINATION
EQUATIONS AND CONVERSIONS HANDOUT SHEET

EQUATIONS

$\dot{Q} \quad \dot{m}c_p\Delta T$

$\dot{Q} \quad \dot{m}\Delta h$

$\dot{Q} \quad UA\Delta T$

$\dot{Q} \propto \dot{m}^3_{Nat\ Circ}$

$\Delta T \propto \dot{m}^2_{Nat\ Circ}$

$K_{eff} = 1/(1 - \rho)$

$\rho = (K_{eff} - 1)/K_{eff}$

$SUR = 26.06/\tau$

$$\tau = \frac{\overline{\beta} - \rho}{\lambda_{eff}\ \rho}$$

$$\rho = \frac{\ell^*}{\tau} + \frac{\overline{\beta}}{1 + \lambda_{eff}\tau}$$

$\ell^* = 1 \times 10^{-4}$ seconds

$\lambda_{eff} = 0.1$ seconds^{-1}

$DRW \propto \varphi^2_{tip}/\varphi^2_{avg}$

$P = P_o 10^{SUR(t)}$

$P = P_o e^{(t/\tau)}$

$A = A_o e^{-\lambda t}$

$CR_{S/D} = S/(1 - K_{eff})$

$CR_1(1 - K_{eff1}) = CR_2(1 - K_{eff2})$

$1/M = CR_1/CR_X$

$A = \pi r^2$

$F = PA$

$\dot{m} = \rho A\vec{v}$

$\dot{W}_{Pump} = \dot{m}\Delta P\upsilon$

$E = IR$

Eff. = Net Work Out/Energy In

$$\upsilon(P_2 - P_1) + \frac{(\vec{v}_2^{\,2} - \vec{v}_1^{\,2})}{2g_c} + \frac{g(z_2 - z_1)}{g_c} = 0$$

$g_c = 32.2$ lbm-ft/lbf-sec^2

CONVERSIONS

---

1 Mw	= 3.41×10^6 Btu/hr	1 Curie	= 3.7×10^{10} dps
1 hp	= 2.54×10^3 Btu/hr	1 kg	= 2.21 lbm
1 Btu	= 778 ft-lbf	1 gal_{water}	= 8.35 lbm
°C	= (5/9)(°F - 32)	1 ft^3_{water}	= 7.48 gal
°F	= (9/5)(°C) + 32		

QUESTION: 1
TOPIC: 291001
KNOWLEDGE: K1.02
QID: B2401 (P2402)

Refer to the drawing of two 1,000 ft^3 pressure vessels with relief protection (see figure below).

Both vessels are in saturated conditions at 281°F and approximately 35 psig. Vessel A is completely filled with saturated water. Vessel B contains one-half saturated steam (100% quality) volume and one-half saturated water (0% quality) volume. Both vessels are protected by identical relief valves.

If the same amount of heat is added to both vessels, the largest pressure increase will occur in vessel _____. And, if 50 lbm of fluid is released through both relief valves, the larger pressure decrease will occur in vessel _____.

A. A; A

B. A; B

C. B; A

D. B; B

ANSWER: B.

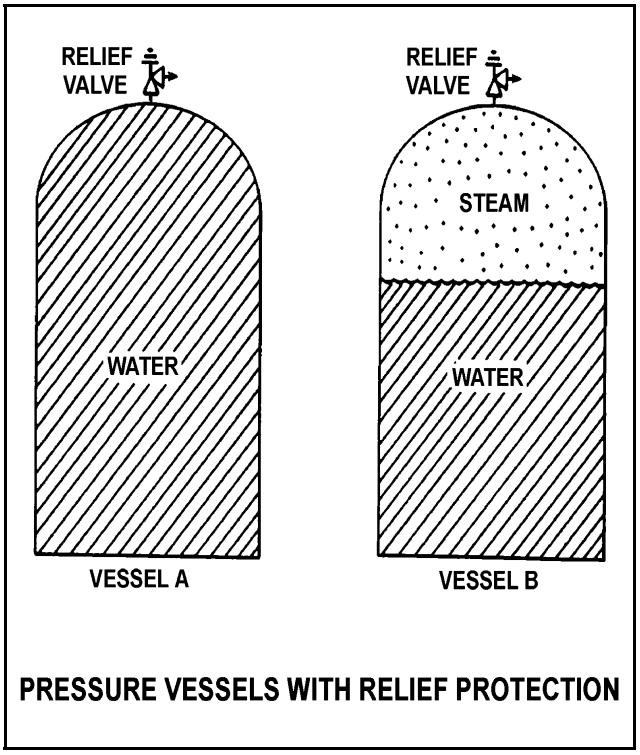

PRESSURE VESSELS WITH RELIEF PROTECTION

PROOF:

Heat addition will result in the largest pressure increase in vessel A because it is in a solid condition. The steam bubble in vessel B will compress and limit the pressure increase.

Releasing 50 lbm will result in the largest pressure decrease in vessel B because there is less total energy in vessel B (due to being only half full of saturated water) to limit the decrease in pressure.

QUESTION 2
TOPIC: 291001
KNOWLEDGE: K1.06
QID: B1003 (Rev)

After an adjustment of the packing gland on a valve that had a minor packing leak, the operator attempts to operate the valve but finds that the valve is stuck. What is the most probable cause?

A. The disk separated from the valve stem as a result of overtightening the packing.

B. The operator placed the valve in the wrong position for adjusting the packing.

C. The valve was overtorqued in the closed direction during the packing adjustment.

D. The maintenance technician overtightened the packing, causing the stem to bind.

ANSWER: D.

QUESTION: 3
TOPIC: 291001
KNOWLEDGE: K1.01
QID: B2003 (Rev)

A vertical safety valve with a 2-inch diameter disk has a compressed spring applying 2,400 lbf to the top of the valve disk in opposition to system pressure. Which one of the following is the approximate system pressure at which the safety valve will open?

A. 95 psig

B. 191 psig

C. 382 psig

D. 764 psig

ANSWER: D.

PROOF:

$F = PA$ $\quad P = 2400/(\pi)(1^2)$

$P = F/A$ $\quad = 763.9$

QUESTION: 4
TOPIC: 291001
KNOWLEDGE: K1.11
QID: B1705 (P1405)

Refer to the drawing of a valve (see figure below).

Which one of the following describes the type of valve shown?

A. Rising-stem globe valve

B. Nonrising-stem globe valve

C. Rising-stem gate valve

D. Nonrising-stem gate valve

ANSWER: D.

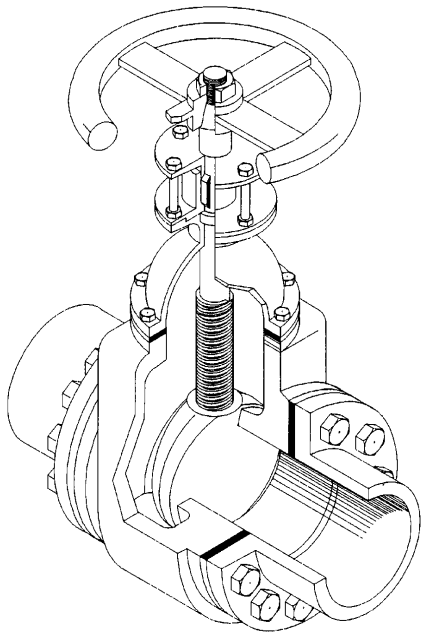

VALVE CUTAWAY - VIEW

QUESTION: 5
TOPIC: 291001
KNOWLEDGE: K1.12
QID: B1205 (Rev)

When comparing a typical gate valve to a typical globe valve in the same application with both valves 50% open, the gate valve has a _____ pressure drop and is the better choice for _____ flow in high-pressure fluid systems.

A. larger; throttling

B. larger; isolating

C. smaller; throttling

D. smaller; isolating

ANSWER: D.

QUESTION: 6
TOPIC: 291002
KNOWLEDGE: K1.01
QID: B2508 (Rev)

A differential pressure detector is being used with an orifice plate to measure water flow rate through a pipe. When the flow detector was last calibrated, the following parameters were observed:

Upstream Pressure: 135 psig
Downstream Pressure: 120 psig

Actual Flow Rate: 100 gpm
Indicated Flow Rate: 100 gpm

Significant erosion of the orifice hole has occurred since the last calibration such that actual flow rate through the orifice has increased to 120 gpm while the upstream and downstream pressures have changed to 124 psig and 109 psig respectively.

What is the approximate currently indicated flow rate?

A. 44 gpm

B. 67 gpm

C. 100 gpm

D. 120 gpm

ANSWER: C.

PROOF:

$$\frac{\text{Flow}_1}{\text{Flow}_2} = \frac{\sqrt{\Delta P_1}}{\sqrt{\Delta P_2}}$$

$$\frac{100}{x} = \frac{\sqrt{15}}{\sqrt{15}}$$

$$x = 100\,\text{gpm}$$

QUESTION: 7
TOPIC: 291002
KNOWLEDGE: K1.05
QID: B2209 (Rev)

Refer to the drawing of a pipe elbow used for flow measurement in a cooling water system (see figure below). A differential pressure (D/P) flow detector is properly connected to instrument lines A and C. Connections B and D are capped.

If instrument line A develops a leak, indicated flow rate will _____ due to a _____ measured D/P.

A. increase; larger

B. increase; smaller

C. decrease; larger

D. decrease; smaller

ANSWER: A.

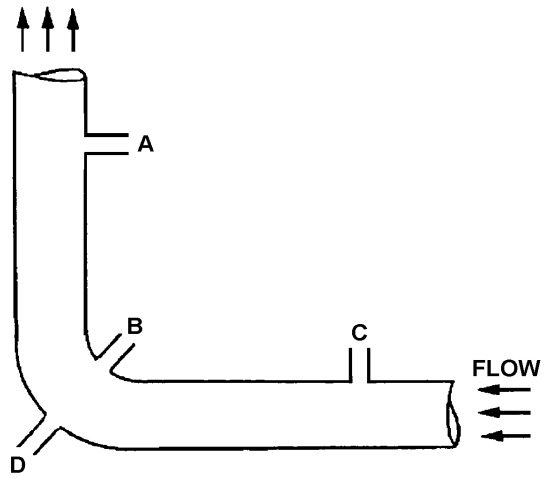

PIPE ELBOW - TOP VIEW

QUESTION: 8
TOPIC: 291002
KNOWLEDGE: K1.08
QID: New

Refer to the drawing of a reactor vessel level detection system (see figure below). The differential pressure (D/P) detector was calibrated while the plant was at normal operating conditions.

With the plant initially at normal operating conditions, a reactor vessel head leak has occurred. The reactor pressure has decreased by 300 psia, and ambient air temperature surrounding the reference leg has increased by 80°F, where these parameters have stabilized.

If the actual reactor vessel level is 6 feet above the fuel, the reduced reactor vessel pressure will tend to make the indicated reactor vessel level read _____ than actual; the increased reference leg temperature will tend to make the indicated reactor vessel level read _____ than actual.

A. higher; higher

B. higher; lower

C. lower; higher

D. lower; lower

ANSWER: A.

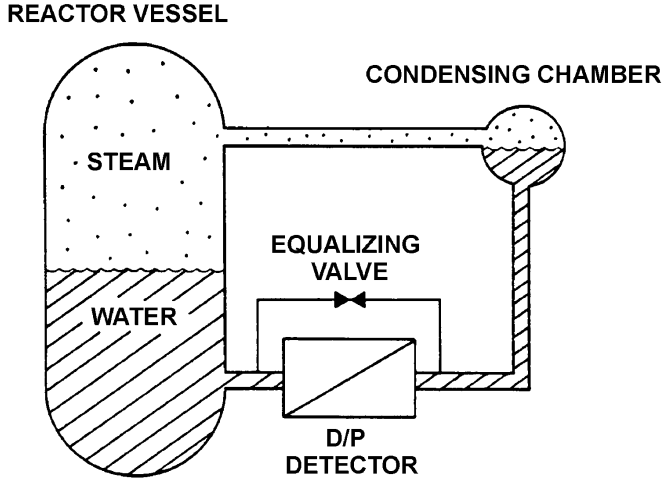

REACTOR VESSEL DIFFERENTIAL PRESSURE LEVEL DETECTOR

QUESTION: 9
TOPIC: 291002
KNOWLEDGE: K1.03
QID: B1207 (P2405)

Flow rate (gpm) in a cooling water system is being measured using a flow nozzle and a differential pressure detector. An instrument calibration has just been performed.

If air is introduced into the system such that air bubbles become entrained in the water, indicated flow rate will be:

A. stable because the air bubbles dampen system pressure surges.

B. fluctuating despite the air bubbles dampening system pressure surges.

C. stable despite the compression/expansion of the air bubbles in the nozzle.

D. fluctuating because of the compression/expansion of the air bubbles in the nozzle.

ANSWER: D.

QUESTION: 10
TOPIC: 291002
KNOWLEDGE: K1.10
QID: B1011 (P1508)

A bourdon tube works on the principle that when the pressure sensed by the tube decreases, the tube tends to: (Assume detected pressure remains above atmospheric pressure.)

A. coil due to the greater pressure-induced force on the outside of the tube overcoming the spring action of the metal.

B. straighten due to the greater pressure-induced force on the outside of the tube overcoming the spring action of the metal.

C. coil due to the spring action of the metal overcoming the pressure-induced force on the inside of the tube.

D. straighten due to the spring action of the metal overcoming the pressure-induced force on the inside of the tube.

ANSWER: C.

QUESTION: 11
TOPIC: 291002
KNOWLEDGE: K1.16
QID: New

Refer to the simplified drawing of a control rod position detector circuit (see figure below).

A magnet on the control rod extension (or drive) shaft sequentially closes individual reed switches mounted vertically adjacent to the control rod drive housing. A constant +5 dc voltage is supplied to the input of the resistor network at resistor R_1.

A control rod is initially fully inserted such that all reed switch contacts are open; then the rod is withdrawn such that reed switch contact S_1 is closed. Compared to the initial circuit currents, the current through resistor R_4 after the rod withdrawal will be _____, and the output current of the resistor network to the amplifier will be _____.

A. lower, higher

B. lower, lower

C. higher, higher

D. higher, lower

ANSWER: A.

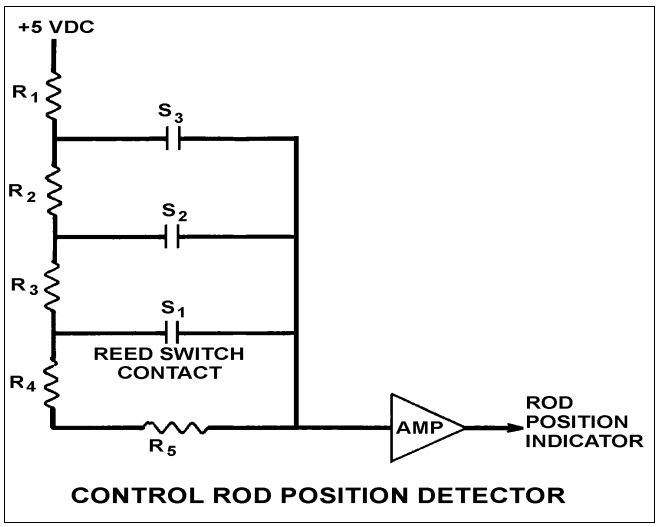

CONTROL ROD POSITION DETECTOR

QUESTION: 12
TOPIC: 291002
KNOWLEDGE: K1.15
QID: B2412 (P2409)

What is the purpose of the reference junction panel provided with many thermocouple circuits?

A. The panel provides a common location to connect the thermocouple leads to extension wires to ensure that thermocouple accuracy is not affected by temperature changes away from the measuring junction.

B. The panel provides a common location to connect the thermocouple leads to extension wires to ensure that thermocouple accuracy is not affected by different lengths of thermocouple extension wires.

C. The panel provides a common location near the thermocouples to connect the thermocouple leads to extension wires while reducing thermocouple inaccuracies due to electrical noise.

D. The panel provides a common location near the thermocouples to connect the thermocouple leads to extension wires and amplify the thermocouple outputs for use by temperature indication devices.

ANSWER: A.

QUESTION: 13
TOPIC: 291002
KNOWLEDGE: K1.21
QID: B2413 (P2014)

What is the effect on a proportional neutron detector if it is operated at a voltage near the high end of the proportional region on the gas-filled detector characteristic curve?

A. Detection of any single ionizing event will result in ionizing nearly the entire detector gas volume, resulting in the inability to differentiate between radiation types and yielding a less accurate neutron count rate.

B. A high gamma radiation field will result in multiple small gamma pulses that combine to form larger pulses, which will be counted as neutron pulses, yielding a less accurate neutron count rate.

C. Neutron pulses will become so large that gamma pulse discrimination is no longer needed, yielding a more accurate neutron count rate.

D. The positive space charge effect will increase and prevent collection of both gamma and neutron pulses, causing a less accurate neutron count rate.

ANSWER: B.

QUESTION: 14
TOPIC: 291002
KNOWLEDGE: K1.23
QID: B1514 (P1513)

Which one of the following lists the two types of gas-filled radiation detectors whose outputs will be <u>least</u> affected by a small variation (± 10 volts) in the voltage applied to the detectors? (Assume voltage remains within normal range.)

A. Limited proportional and Geiger Mueller

B. Ion chamber and proportional

C. Proportional and limited proportional

D. Geiger Mueller and ion chamber

ANSWER: D.

QUESTION: 15
TOPIC: 291003
KNOWLEDGE: K1.03
QID: B2315 (Rev)

The level in a drain collection tank is being controlled by an automatic level controller and is initially at the controller set point. Flow rate into the tank increases, slowly at first, and then faster until a stable flow rate is attained.

As tank level increases, the controller slowly opens a tank drain valve. The level controller output signal increases both as the tank level increases and as the rate of tank level change quickens. After a few minutes, a new, steady-state tank level above the original level is established, with the drain flow rate equal to the supply flow rate.

The controller in this system uses _____ control.

A. proportional only

B. proportional plus derivative

C. proportional plus integral

D. proportional plus integral plus derivative

ANSWER: B.

QUESTION: 16
TOPIC: 291003
KNOWLEDGE: K1.05
QID: B1416 (Rev)

Which one of the following describes a characteristic of pneumatic valve positioners?

A. They provide auto and manual demand signals to valve controllers and valve actuators.

B. They supply air pressure to valve actuators in response to a control signal to regulate valve position.

C. They can either receive or supply air to/from valve controllers, depending on the direction of valve travel.

D. They act independently of the valve controller, in order to prevent pressure transients on the valve actuator diaphragm.

ANSWER: B.

QUESTION: 17
TOPIC: 291003
KNOWLEDGE: K1.06
QID: B2015 (Rev)

A diesel generator (DG) is supplying an isolated electrical bus with the governor operating in the speed droop mode. Assuming the DG does <u>not</u> trip, if a large electrical bus load trips, generator frequency will:

A. initially increase, then decrease and stabilize below the initial value.

B. initially increase, then decrease and stabilize at the initial value.

C. initially increase, then decrease and stabilize above the initial value.

D. remain constant during and after the load trip.

ANSWER: C.

QUESTION: 18
TOPIC: 291004
KNOWLEDGE: K1.04
QID: B1319 (P119)

Refer to the drawing of a centrifugal pump operating curve (see figure below).

Which point represents pump operation at shutoff head?

A. Point A

B. Point B

C. Point C

D. Point D

ANSWER: A.

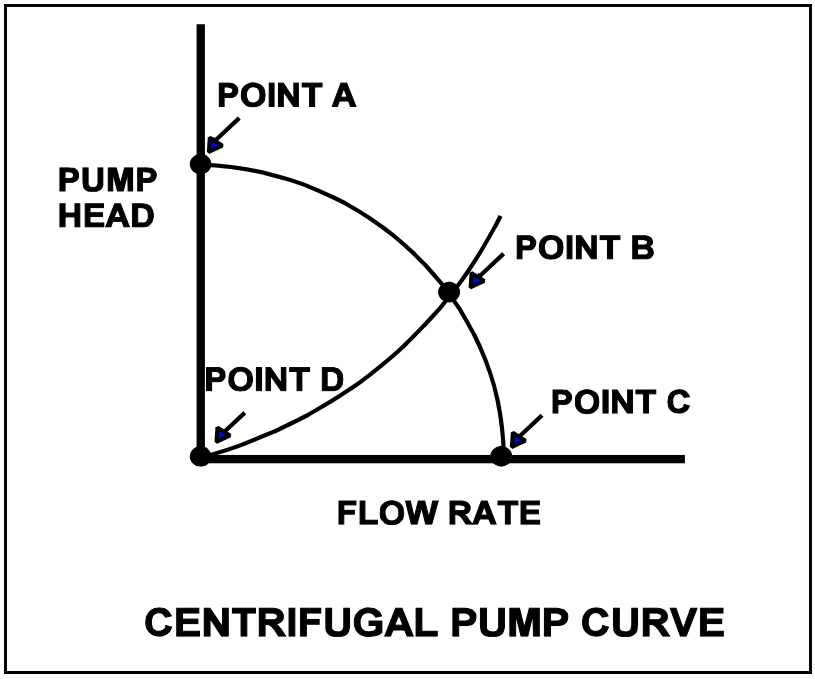

QUESTION: 19
TOPIC: 291004
KNOWLEDGE: K1.13
QID: B1423 (P623)

Refer to the drawing of a lube oil temperature control system and the associated centrifugal pump operating curve (see figure below).

The pump is operating at point B on the operating curve. If the temperature control valve modulates farther open, operating point B will be located on curve _____, closer to point _____. (The options below refer to curves 1 and 2 exactly as shown in the figure.)

A. 1; D

B. 2; A

C. 1; E

D. 2; C

ANSWER: D.

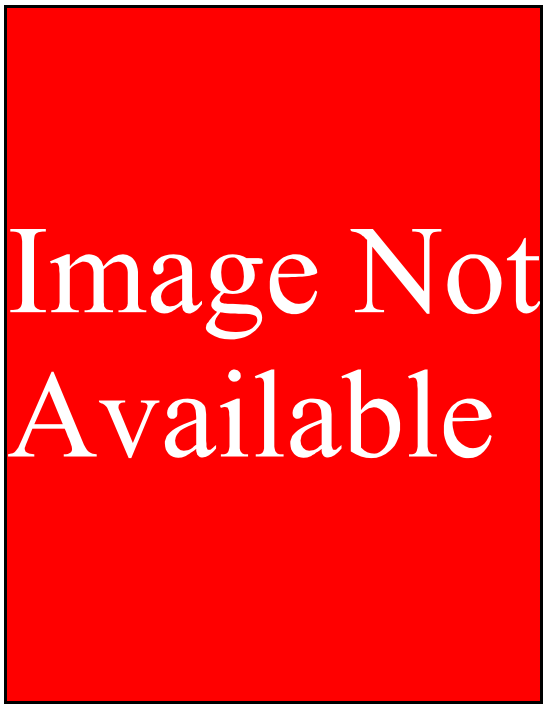

QUESTION: 20
TOPIC: 291004
KNOWLEDGE: K1.01
QID: B1718 (P1820)

By starting a centrifugal pump with the discharge valve throttled versus fully open, the possibility of pump runout is _____ , and the possibility of pump cavitation is _____ .

A. increased; decreased

B. increased; increased

C. decreased; decreased

D. decreased; increased

ANSWER: C.

QUESTION: 21
TOPIC: 291004
KNOWLEDGE: K1.06
QID: B2621 (P2621)

A cooling water pump is operating with pump suction parameters as follows:

Suction Temperature: 124°F
Suction Pressure: 11.7 psia

What is the approximate available net positive suction head (NPSH) for the pump? (Neglect the contribution of the suction fluid velocity to NPSH.)

A. 23 feet

B. 27 feet

C. 31 feet

D. 35 feet

ANSWER: A.

PROOF:

$NPSH_{avail} = (P - Psat) \times v$

from steam tables:

Psat = 1.89 psia @ 124° F $v = 0.016221\ ft^3/lbm$

$11.7 - 1.89\ lbf/in^2 \times 0.016221\ ft^3/lbm \times 144\ in^2/ft^2 = NPSH_{avail}$

$NPSH_{avail} = 22.9$ ft-lbF/lbm, = 22.9 feet

QUESTION: 22
TOPIC: 291004
KNOWLEDGE: K1.07
QID: New

An ac motor-driven centrifugal charging pump is being started for weekly equipment shifts. During this start, motor current remains peaked for 6 seconds before decreasing to standard running current; normally, the starting current peak lasts about 4 seconds.

Which one of the following would cause the extended starting current peak?

A. The pump shaft is seized and will not turn.

B. The pump was initially rotating slowly in the reverse direction.

C. The pump discharge check valve is stuck and will not open.

D. The pump was initially air bound, and then primed itself after 6 seconds of operation.

ANSWER: B.

QUESTION: 23
TOPIC: 291004
KNOWLEDGE: K1.12
QID: B1323 (P1623)

A centrifugal pump is operating at maximum design flow rate, delivering water through two parallel valves. Valve A is 1/2 open, and valve B is 1/4 open.

Which one of the following will occur if both valves are fully opened?

A. The pump will immediately operate at shutoff head.

B. The pump available net positive suction head (NPSH) will increase.

C. The pump required NPSH will decrease.

D. The pump will immediately operate at runout conditions.

ANSWER: D.

QUESTION: 24
TOPIC: 291004
KNOWLEDGE: K1.17
QID: B2624 (Rev)

A section of reactor coolant piping is being hydrostatically tested to 1400 psig using a positive displacement pump. The operating characteristics of the positive displacement pump are shown below, identifying ideal, expected, and actual pump performance during the test.

Which one of the following could have caused the observed difference between the expected and the actual pump performance?

A. Available NPSH decreased to slightly above the required NPSH for the pump.

B. Available NPSH decreased to slightly below the required NPSH for the pump.

C. A relief valve on the pump discharge piping failed to open at its set point of 1400 psig.

D. A relief valve on the pump discharge piping opened prior to its set point of 1400 psig.

ANSWER: B.

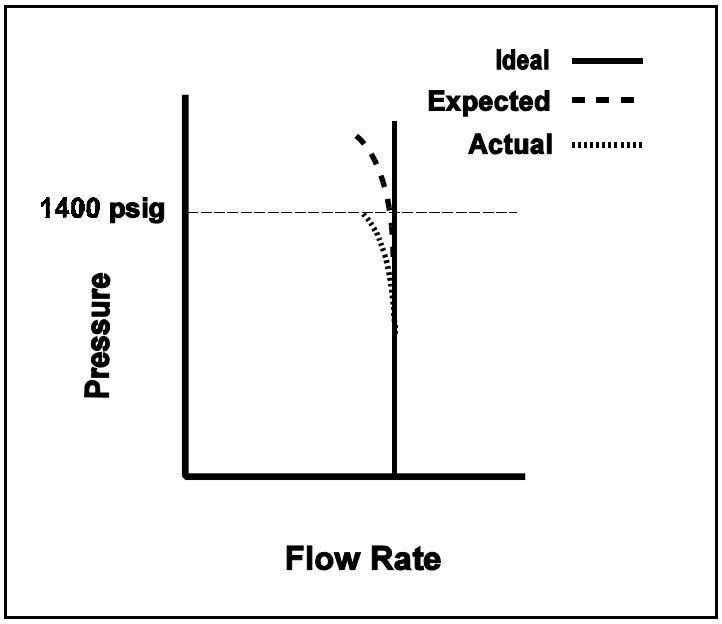

QUESTION: 25
TOPIC: 291004
KNOWLEDGE: K1.14
QID: B1421 (Rev) P2224

A motor-driven centrifugal pump is operating in an open system with its discharge valve throttled to 50%. How will the pump be affected if the discharge valve is fully opened?

A. Motor current decreases and total developed head decreases.

B. Available net positive suction head (NPSH) decreases, and pump differential pressure decreases.

C. Total developed head increases and available NPSH decreases.

D. The potential for pump cavitation decreases, and pump differential pressure decreases.

ANSWER: B.

QUESTION: 26
TOPIC: 291005
KNOWLEDGE: K1.01
QID: B1026 (Rev)

A motor-driven centrifugal pump exhibited indications of pump failure while being started in an idle cooling water system. Assuming the pump motor breaker does <u>not</u> trip, which one of the following pairs of indications would be observed if the pump failure is a locked impeller shaft?

A. Lower than normal running current with zero system flow rate

B. Lower than normal running current with a fraction of normal system flow rate

C. Excessive duration of starting current peak with zero system flow rate

D. Excessive duration of starting current peak with a fraction of normal system flow rate

ANSWER: C.

QUESTION: 27
TOPIC: 291005
KNOWLEDGE: K1.04
QID: B2030 (P428)

A variable-speed centrifugal pump is operating at 600 rpm with the following parameters:

Pump motor current	=	10 amperes
Pump head	=	50 psi
Pump flow rate	=	200 gpm

What will be the new value of pump head if the pump speed is increased such that the current requirements are now 640 amperes?

A. 400 psi

B. 600 psi

C. 800 psi

D. 1,200 psi

ANSWER: C.

PROOF:

From the Pump laws:

$$H \propto N^2 \qquad P \propto N^3$$

$$\frac{H_1}{H_2} = \left(\frac{P_1}{P_2}\right)^{2/3}$$

$$H_2 = H_1\left(\frac{P_2}{P_1}\right)^{2/3} = 50\left(\frac{640}{10}\right)^{2/3} = 50(64)^{2/3} = 50(16)$$

$$h_2 = 800 \text{ psi}$$

QUESTION: 28
TOPIC: 291005
KNOWLEDGE: K1.05
QID: B2227 (Rev)

Two identical 4160 Vac induction motors are connected to identical centrifugal pumps being used to provide cooling water flow in separate identical systems in a power plant. Each motor is rated at 1000 hp. The discharge valve for pump A is fully shut and the discharge valve for pump B is fully open.

If each motor is then started, the longer time period required to stabilize motor current will be experienced by motor _____ and the higher stable motor current will be experienced by motor _____.

A. A; A

B. A; B

C. B; A

D. B; B

ANSWER: D.

QUESTION: 29
TOPIC: 291005
KNOWLEDGE: K1.07
QID: B929

What is the significance of a power factor of 0.8 when describing the output of a generator?

A. The relationship between generator output voltage and current can be described as purely resistive.

B. 80% of the energy input to the generator produces useful output.

C. 80% of the generator output will be converted to useful power.

D. This information characterizes the generator as a dc generator.

ANSWER: C.

QUESTION: 30
TOPIC: 291005
KNOWLEDGE: K1.08
QID: B729

The main generator is operating on the grid with the following indications:

100 MWe
100 MVAR (VARs out)
2,800 amps

If main generator excitation is <u>increased</u> slightly, amps will _____ and MWe will _____.

A. decrease; increase

B. increase; increase

C. decrease; remain the same

D. increase; remain the same

ANSWER: D.

QUESTION: 31
TOPIC: 291006
KNOWLEDGE: K1.04
QID: B2431 (P2433)

Refer to the drawing of a water cleanup system (see figure below).

All valves are identical and are initially 50% open. To raise the temperature at point 1, the operator can adjust valve _____ in the _____ direction.

A. A; shut

B. B; open

C. C; shut

D. D; open

ANSWER: B.

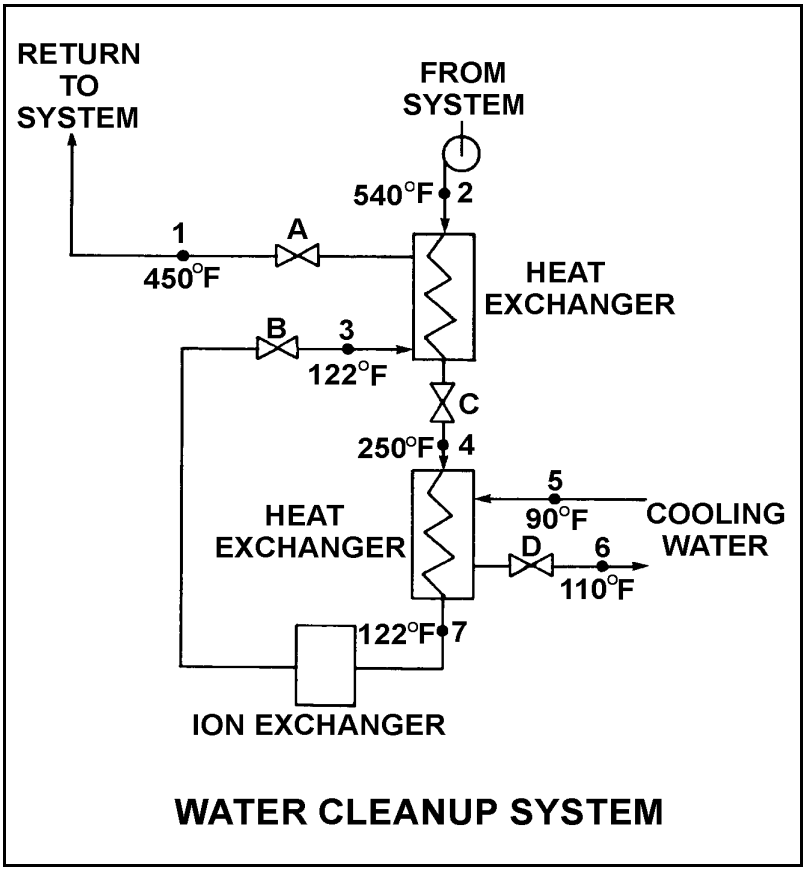

QUESTION: 32
TOPIC: 291006
KNOWLEDGE: K1.08
QID: New

Refer to the drawing of a lube oil heat exchanger (see figure below).

Given the following initial parameters:

Cooling water inlet temperature ($T_{cw\text{-}in}$)	= 75°F
Cooling water outlet temperature ($T_{cw\text{-}out}$)	= 105°F
Oil inlet temperature ($T_{oil\text{-}in}$)	= 140°F
Oil outlet temperature ($T_{oil\text{-}out}$)	= 100°F

Air introduction to the heat exchanger results in some of the heat exchanger tubes becoming uncovered. As a result, $T_{cw\text{-}out}$ decreases to 99°F. Assuming mass flow rate and c_p of both fluids remain the same, which one of the following will be the approximate temperature of the oil exiting the heat exchanger ($T_{oil\text{-}out}$)?

A. 99°F

B. 108°F

C. 116°F

D. 122°F

ANSWER: B.

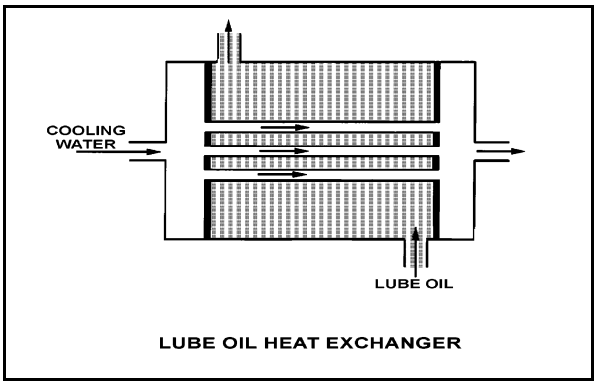

LUBE OIL HEAT EXCHANGER

PROOF: $Q = m\, c_p\, \Delta T$
Since m and c_p do not change, then ΔT of oil must decrease by same fraction as ΔT of cooling water. Since cooling water ΔT decreased by 20%, oil ΔT must decrease by 20% as well. 20% of oil ΔT is (.2 x 40 = 8°F) 8°F. Therefore, 100 + 8 = 108 °F

QUESTION: 33
TOPIC: 291006
KNOWLEDGE: K1.03
QID: B2333 (Rev)

A parallel-flow heat exchanger and a counter-flow heat exchanger are being used in the same water-to-water cooling application. Each heat exchanger is identical except for the water flow directions. Each heat exchanger has the same mass flow rates and inlet temperatures.

Under these conditions, the counter-flow heat exchanger will have the _____ heat transfer rate because _____.

A. lower; the effective average ΔT across the tube walls is smaller

B. lower; the effective average outlet temperature of the two fluids is lower

C. higher; the effective average ΔT across the tube walls is greater

D. higher; the effective average outlet temperature of the two fluids is higher

ANSWER: C.

QUESTION: 34
TOPIC: 291006
KNOWLEDGE: K1.13
QID: B2336 (Rev)

Which one of the following describes the state of water at 150 psig and 360°F?

A. Saturated liquid

B. Subcooled liquid

C. Superheated vapor

D. Mixture of saturated liquid and vapor

ANSWER: B.

PROOF:

P_{sat} for 360°F is ~ 153.01 psia

P_{water} is 150 psig + 14.7 = 164.7 psia

$P_{water} > P_{sat}$ = subcooled

QUESTION: 35
TOPIC: 291006
KNOWLEDGE: K1.10
QID: B733

Which one of the following changes will result in <u>increased</u> subcooling of the condensate water in the condenser hot well?

A. Decrease circulating water flow

B. Increase circulating water temperature

C. Decrease the main turbine generator MW load

D. Isolate one bay of the condenser circulating water system

ANSWER: C.

QUESTION: 36
TOPIC: 291006
KNOWLEDGE: K1.17
QID: B1931 (P1134)

Which one of the following effects will occur as a result of multiple tube failures (leaks) in the main condenser with the plant at 50% power? (Assume condenser vacuum does not change.)

A. Condensate depression will decrease.

B. Condensate conductivity will increase.

C. Condensate oxygen concentration will decrease.

D. Condenser inlet cooling water flow rate will decrease.

ANSWER: B.

QUESTION: 37
TOPIC: 291007
KNOWLEDGE: K1.04
QID: B152 (Rev) (P936)

The ion exchange efficiency of a condensate demineralizer is determined by performing a calculation using the:

A. change in conductivity at the outlet of the demineralizer over a period of time.

B. change in pH at the outlet of the demineralizer over a period of time.

C. demineralizer inlet and outlet conductivity.

D. demineralizer inlet and outlet pH.

ANSWER: C.

QUESTION: 38
TOPIC: 291007
KNOWLEDGE: K1.05
QID: B1736 (P1736)

A condensate demineralizer differential pressure (D/P) gauge indicates 6 psid at 50% flow rate. Which one of the following combinations of condensate flow and demineralizer D/P observed later at various power levels indicates an increase in the accumulation of insoluble corrosion products in the demineralizer?

	CONDENSATE FLOW	DEMINERALIZER D/P (PSID)
A.	100%	23.5
B.	75%	16.5
C.	60%	8.5
D.	25%	1.5

ANSWER: B.

PROOF:

$F \propto N; H \propto N^2$

$H_1/H_2 = (F_1/F_2)^2$

$H_2 = H_1(F_2/F_1)^2$

@25% flow, D/P should be 1.5 psid

@60% flow, D/P should be 8.64 psid

@75% flow, D/P should be 13.5 psid

@100% flow, D/P should be 24.0 psid

Only choice C exceeds the expected D/P.

QUESTION: 39
TOPIC: 291007
KNOWLEDGE: K1.07
QID: B2438

Which one of the following describes the process of regenerating a mixed-resin deep bed demineralizer? (Assume the demineralizer has already been backwashed.)

A. Alternating the flow of acidic and caustic solutions through the demineralizer to remove suspended solids and colloidal matter.

B. Alternating the flow of acidic and caustic solutions through the demineralizer to remove ionic impurities.

C. Reversing flow of pure water through the demineralizer to remove suspended solids and colloidal matter.

D. Reversing flow of pure water through the demineralizer to remove ionic impurities.

ANSWER: B.

QUESTION: 40
TOPIC: 291008
KNOWLEDGE: K1.02
QID: B1141

Which one of the following describes circuit breaker local overcurrent trip flag indicators?

A. They actuate prior to breaker tripping to warn of imminent protective action.

B. When actuated, they indicate that the breaker overcurrent trip relay has been reset.

C. They indicate breaker overcurrent trip actuation during and after breaker trip actuation.

D. When actuated, they indicate that the associated circuit breaker has failed to trip open.

ANSWER: C.

QUESTION: 41
TOPIC: 291008
KNOWLEDGE: K1.06
QID: B2442 (Rev) (P2640)

Refer to the drawing of a valve motor control circuit (see figure below) for a valve that is currently fully closed and has a 10-second stroke time. (Note: "LS" contacts are not necessarily shown in their current condition.)

The operator takes the control switch to "Open" momentarily and the valve begins to open. Five seconds later, the operator takes the switch to "Close" momentarily and then releases the switch. Which one of the following describes the valve response after the switch is released?

A. The valve will stop opening and remain partially open.

B. The valve will stop opening and then go fully closed.

C. The valve will open fully and remain fully open.

D. The valve will open fully and then go fully closed.

ANSWER: C.

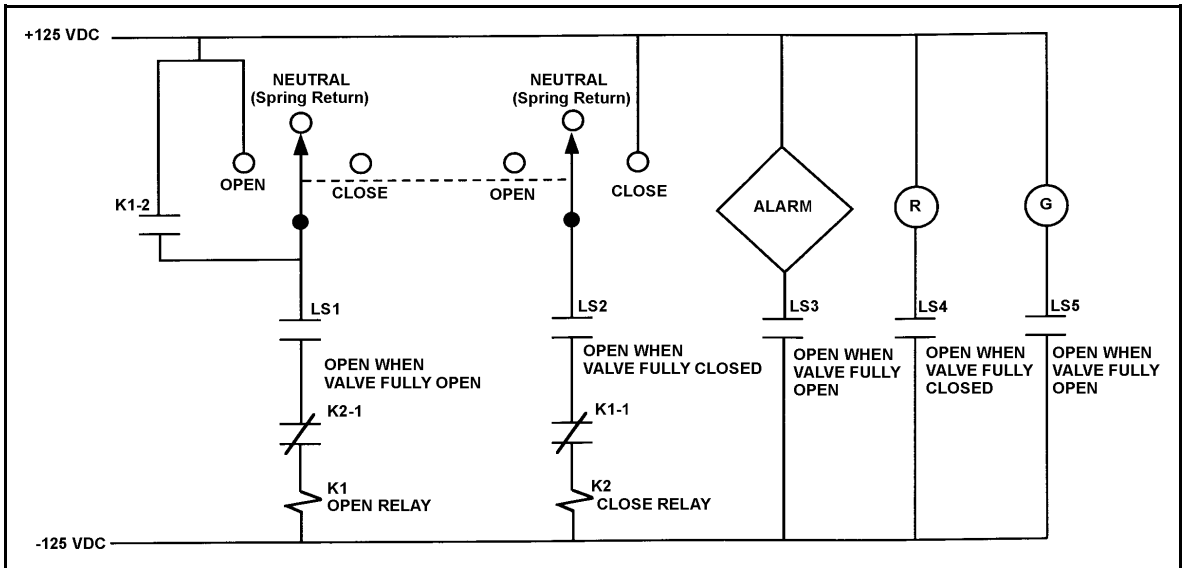

VALVE MOTOR CONTROL CIRCUIT

QUESTION: 42
TOPIC: 291008
KNOWLEDGE: K1.03
QID: B1640 (Rev) (P1140)

The following indications are observed in the control room for a normally-open breaker that directly starts/stops a 480 Vac motor:

Red position indicating light is on.
Green position indicating light is off.
Load current indicates 50 amps.
Supply voltage indicates 480 volts.

What is the condition of the breaker?

A. Open and racked to "test" position

B. Closed and racked to "test" position

C. Open and racked in

D. Closed and racked in

ANSWER: D.

QUESTION: 43
TOPIC: 291008
KNOWLEDGE: K1.08
QID: B2443 (Rev) (P2642)

A typical main generator is being paralleled to the grid. Generator voltage is slightly higher than grid voltage and the synchroscope is rotating slowly in the clockwise direction. The generator breaker is closed just as the synchroscope pointer reaches the 3 o'clock position.

Which one of the following will occur after the breaker is closed?

A. The breaker will remain closed and the generator will supply only MW to the grid.

B. The breaker will remain closed and the generator will supply both MW and MVAR to the grid.

C. The breaker will open due to overcurrent.

D. The breaker will open due to reverse power.

ANSWER: C.

QUESTION: 44
TOPIC: 291008
KNOWLEDGE: K1.10
QID: B1842 (P243)

The function of high voltage electrical disconnects is to provide _____ electrical isolation of equipment during _____ conditions.

A. manual; no-load

B. manual; overload

C. automatic; no-load

D. automatic; overload

ANSWER: A.

QUESTION: 45
TOPIC: 292001
KNOWLEDGE: K1.02
QID: B2046 (Rev) (P1245)

As compared to a prompt neutron, a delayed neutron that is born from the same fission event is more likely to:

A. leak out of the core.

B. be absorbed in the moderator.

C. be captured by a U-238 nucleus.

D. cause fission of a U-235 nucleus.

ANSWER: D.

QUESTION: 46
TOPIC: 292001
KNOWLEDGE: K1.05
QID: B346

The best neutron moderator is _____ and is composed of _____ atoms.

A. dense; large

B. not dense; large

C. dense; small

D. not dense; small

ANSWER: C.

QUESTION: 47
TOPIC: 292002
KNOWLEDGE: K1.09
QID: B1247 (N/A)

Which one of the following combinations of core conditions at 35% power indicates the least amount of excess reactivity exists in the core?

	CONTROL ROD POSITION	REACTOR RECIR-CULATION FLOW
A.	50% inserted	50%
B.	50% inserted	25%
C.	25% inserted	50%
D.	25% inserted	25%

ANSWER: C.

QUESTION: 48
TOPIC: 292002
KNOWLEDGE: K1.12
QID: B748 (Rev) (P2146)

With $K_{eff} = 0.982$, how much positive reactivity is required to make the reactor critical?

A. 1.720% ΔK/K

B. 1.767% ΔK/K

C. 1.800% ΔK/K

D. 1.833% ΔK/K

ANSWER: D.

PROOF:

$$\rho = \frac{k_{eff} - 1}{k_{eff}} = \frac{0.982 - 1}{0.982} = \frac{-0.018}{0.982} = -0.0183299$$

$$\rho = -1.833\%,$$

Therefore, +1.833% ΔK/K is needed to make reactor critical

QUESTION: 49
TOPIC: 292003
KNOWLEDGE: K1.01
QID: B2249 (P2248)

Two reactors are currently shut down with a reactor startup in progress. The two reactors are identical except that reactor A has a source neutron strength of 100 neutrons per second and reactor B source neutron strength is 200 neutrons per second. Control rods are stationary and Keff is 0.98 in both reactors. Core neutron level has reached equilibrium in both reactors.

Which one of the following lists the core neutron level (neutrons per second) in reactors A and B?

	Reactor A	Reactor B
A.	5,000	10,000
B.	10,000	20,000
C.	10,000	40,000
D.	20,000	40,000

ANSWER: A.

PROOF:

$CR_{S/D} = S/(1-K)$

Reactor A

$CR_{S/D} = 100/.02$

$= 5,000$

Reactor B

$CR_{S/D} = 200/.02$

$= 10,000$

QUESTION: 50
TOPIC: 292003
KNOWLEDGE: K1.06
QID: B1250 (Rev)

Two reactors are identical in every way except that reactor A is at the beginning of core life and reactor B is at the end of core life. Both reactors are critical at 10^{-5}% power.

If the same amount of positive reactivity is added to each reactor at the same time, the point of adding heat will be reached first by reactor _____ because it has a _____ delayed neutron fraction.

A. A; smaller

B. A; larger

C. B; smaller

D. B; larger

ANSWER: C.

QUESTION: 51

DELETED

QUESTION: 52
TOPIC: 292004
KNOWLEDGE: K1.05
QID: B2453 (Rev)

Refer to the drawing of microscopic cross section for absorption versus neutron energy for a resonance peak in U-238 in a reactor operating at 80% power (see figure below).

If reactor power is increased to 100%, the height of the curve will _____ and the area under the curve will _____.

A. increase; increase

B. increase; remain the same

C. decrease; decrease

D. decrease; remain the same

ANSWER: D

Image Not Available

QUESTION: 53
TOPIC: 292004
KNOWLEDGE: K1.02
QID: B1152 (Rev)

Which one of the following describes the change in the moderator temperature coefficient (MTC) of reactivity over core life? (Assume 100% power for all cases.)

A. MTC becomes less negative because as control rods are withdrawn from the core, the increase in the number of neutrons leaking from the core for a 1°F increase in moderator temperature is smaller.

B. MTC becomes less negative because as U-238 depletes, a 1°F increase in moderator temperature results in fewer neutrons escaping resonance capture.

C. MTC becomes more negative because as U-235 depletes, a 1°F increase in moderator temperature permits more neutrons to leak out of the core.

D. MTC becomes more negative because as fission product poisons build up, the increase in the number of neutrons being absorbed by fission product poisons for a 1°F increase in moderator temperature is larger.

ANSWER: A.

QUESTION: 54
TOPIC: 292005
KNOWLEDGE: K1.04
QID: B54

The reverse power effect (or reverse reactivity effect) occasionally observed when a shallow control rod is withdrawn one or two notches is due to a relatively:

A. small local power decrease due to increased local Doppler effects.

B. small local power decrease due to the shadowing effect of nearby control rods.

C. large local power increase being offset by a void-related power decrease.

D. large local power increase being offset by a moderator temperature-related power decrease.

ANSWER: C.

QUESTION: 55
TOPIC: 292005
KNOWLEDGE: K1.07
QID: B856 (Rev) (P1354)

Integral rod worth is the:

A. change in reactivity per unit change in rod position.

B. reactivity inserted by moving a control rod from a reference position to another position.

C. change in worth of a control rod per unit change in reactor power.

D. rod worth associated with the most reactive control rod.

ANSWER: B.

QUESTION: 56
TOPIC: 292005
KNOWLEDGE: K1.08
QID: New (P856)

During normal full power operation, the differential control rod worth is small near the top and bottom of the core compared to the center regions due to the effects of:

A. fuel enrichment.

B. neutron flux distribution.

C. xenon concentration.

D. fuel temperature distribution.

ANSWER: B.

QUESTION: 57
TOPIC: 292005
KNOWLEDGE: K1.09
QID: B1456 (Rev)

The reactor is operating at 85% power with control rod X-Y inserted 20%. Which one of the following will cause the differential control rod worth of control rod X-Y to become more negative? (Assume that control rod X-Y remains 20% inserted for each case.)

A. Fuel temperature increases as fission product gases accumulate in a fuel rod.

B. Reactor vessel pressure drifts from 900 psig to 880 psig.

C. Core Xe-135 builds up in the lower half of the core.

D. An adjacent control rod is fully withdrawn from the core.

ANSWER: D.

QUESTION: 58
TOPIC: 292006
KNOWLEDGE: K1.02
QID: B55

Which one of the following lists the proper order of substances from the largest to the smallest microscopic cross sections for absorption of thermal neutrons?

A. Gadolinium, U-235, Xe-135, U-238

B. Gadolinium, Xe-135, U-235, U-238

C. Xe-135, U-235, gadolinium, U-238

D. Xe-135, gadolinium, U-235, U-238

ANSWER: D.

QUESTION: 59
TOPIC: 292006
KNOWLEDGE: K1.04
QID: B1759

Which one of the following describes the change in core xenon-135 concentration immediately following a 10% power increase from equilibrium 70% power over a two-hour period?

A. Xe-135 concentration will initially decrease due to the increased rate of decay of Xe-135 to Cs-135.

B. Xe-135 concentration will initially decrease due to the increased absorption of thermal neutrons by xenon-135.

C. Xe-135 concentration will initially increase due to the increased I-135 production rate directly from fission.

D. Xe-135 concentration will initially increase due to the increased production rate directly from fission.

ANSWER: B.

QUESTION: 60
TOPIC: 292006
KNOWLEDGE: K1.08
QID: New

A reactor has been operating at 50% power for several weeks near the middle of core life with core axial power distribution evenly divided above and below the core midplane. Reactor power is to be increased to 65% over a two-hour period using shallow control rods only.

During the power increase, core axial power distribution will:

A. shift toward the top of the core.

B. shift toward the bottom of the core.

C. remain evenly divided above and below the core midplane.

D. have peaks near the top and the bottom of the core.

ANSWER: B.

QUESTION: 61
TOPIC: 292006
KNOWLEDGE: K1.09
QID: B562 (Rev) (P2260)

A reactor is initially shut down with no xenon in the core. The reactor is brought critical and power level is increased to the point of adding heat. The shift supervisor has directed that power be maintained constant at this level for 12 hours for testing.

To accomplish this, control rods will have to be:

A. withdrawn periodically for the duration of the 12 hours.

B. inserted periodically for the duration of the 12 hours.

C. withdrawn periodically for 4 to 6 hours, then inserted periodically.

D. inserted periodically for 4 to 6 hours, then withdrawn periodically.

ANSWER: A.

QUESTION: 62
TOPIC: 292006
KNOWLEDGE: K1.11
QID: B1160 (Rev)

A reactor has been operating at 50% power for 3 hours following a one-hour power reduction from steady-state 100% power. Which one of the following describes the current core xenon-135 concentration?

A. Increasing toward a peak

B. Decreasing toward an upturn

C. Increasing toward equilibrium

D. Decreasing toward equilibrium

ANSWER: A.

QUESTION: 63
TOPIC: 292006
KNOWLEDGE: K1.14
QID: B2062

A reactor is initially operating at 100% power with equilibrium core xenon-135. Power is decreased to 75% over a 1-hour period and stabilized. No subsequent operator actions are taken.

Considering only the reactivity effects of core xenon-135 changes, which one of the following describes reactor power 10 hours after the power change?

A. Greater than 75% and decreasing slowly

B. Greater than 75% and increasing slowly

C. Less than 75% and decreasing slowly

D. Less than 75% and increasing slowly

ANSWER: D.

QUESTION: 64
TOPIC: 292007
KNOWLEDGE: K1.01
QID: B2564 (P2164)

Why are burnable poisons installed in a reactor core?

A. To shield reactor fuel from thermal neutron flux until later in core life

B. To compensate for control rod burnout that occurs over core life

C. To flatten the radial thermal neutron flux distribution early in core life

D. To ensure a negative moderator temperature coefficient early in core life

ANSWER: A.

QUESTION: 65
TOPIC: 292008
KNOWLEDGE: K1.04
QID: B1665 (P1770)

Refer to the drawing of a 1/M plot (see figure below).

The least conservative approach to criticality is represented by curve _____ and could possibly be the result of recording count rates at _____ time intervals after incremental fuel loading steps than for the situations represented by the other curves.

A. A; longer

B. A; shorter

C. C; longer

D. C; shorter

ANSWER: D.

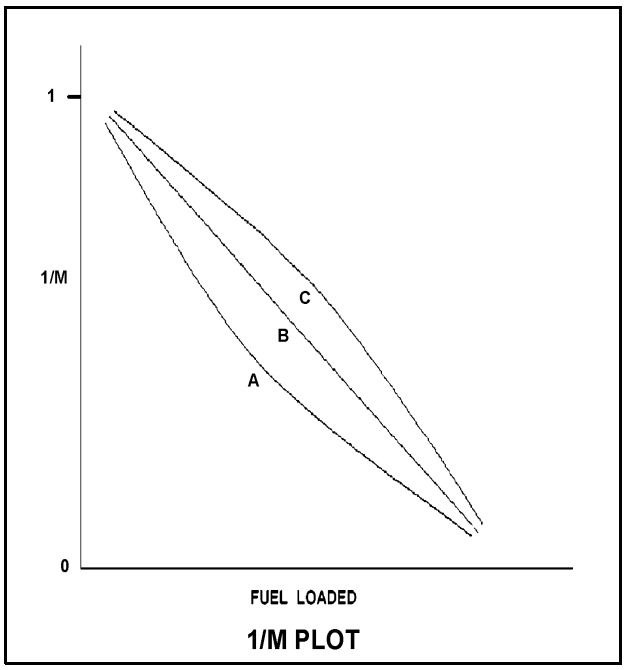

REFERENCE: UW Exam Q Catalog, #60

QUESTION: 66
TOPIC: 292008
KNOWLEDGE: K1.03
QID: B1565 (P1065)

During a reactor startup, equal increments of positive reactivity are being sequentially added. The count rate is allowed to reach equilibrium after each addition. Which one of the following statements concerning the equilibrium count rate applies after each successive reactivity addition?

A. The time required to reach equilibrium count rate is the same.

B. The time required to reach equilibrium count rate is shorter.

C. The numerical change in equilibrium count rate increases.

D. The numerical change in equilibrium count rate is the same.

ANSWER: D.

QUESTION: 67
TOPIC: 292008
KNOWLEDGE: K1.06
QID: B1567 (Rev) (P1167)

The following data was obtained during a reactor startup:

Rod Position (UNITS WITHDRAWN)	Count Rate (CPS)
0	180
10	210
15	250
20	300
25	360
30	420

Assuming uniform differential rod worth, at what approximate rod height will criticality occur?

A. 31 to 45 units withdrawn

B. 46 to 60 units withdrawn

C. 61 to 75 units withdrawn

D. 76 to 90 units withdrawn

ANSWER: B.

QUESTION: 68
TOPIC: 292008
KNOWLEDGE: K1.10
QID: B2671 (P2668)

A reactor is being started up under cold shutdown conditions with a stable positive 100-second period and power is entering the intermediate range. Assuming no operator action is taken that affects reactivity, reactor period will remain constant until:

A. void production begins in the core, when reactor period will lengthen.

B. core heat production exceeds ambient losses, when reactor period will lengthen.

C. xenon-135 production becomes significant, when reactor period will shorten.

D. fuel temperature begins to increase, when reactor period will shorten.

ANSWER: B.

QUESTION: 69
TOPIC: 292008
KNOWLEDGE: K1.18
QID: B2470

Neglecting the effects of core Xe-135, which one of the following power changes requires the greatest amount of positive reactivity addition?

A. 3% power to 10% power

B. 10% power to 25% power

C. 25% power to 60% power

D. 60% power to 100% power

ANSWER: D.

PROOF:

The greatest power change will produce the greatest power defect. Power defect must be overcome with positive reactivity to increase power. Power defect is greatest in option D.

QUESTION: 70
TOPIC: 292008
KNOWLEDGE: K1.22
QID: B1670

A plant is operating normally at 50% power when a steam break occurs that releases 5% of rated steam flow. Assume no operator or protective actions occur, automatic pressure control returns reactor pressure to its initial value, and feed water injection temperature remains the same.

How will turbine power respond?

A. Decrease and stabilize at a lower power level

B. Increase and stabilize at a higher power level

C. Decrease, then increase and stabilize at the previous power level

D. Increase, then decrease and stabilize at the previous power level

ANSWER: A.

QUESTION: 71
TOPIC: 292008
KNOWLEDGE: K1.27
QID: B1472 (N/A)

A reactor is initially operating at 100% power when a control rod fully inserts into the core. Assuming no operator action, reactor power will initially decrease and then:

A. return to the original power level with the void boundary lower in the core.

B. stabilize at a lower power level with the void boundary lower in the core.

C. return to the original power level with the void boundary higher in the core.

D. stabilize at a lower power level with the void boundary higher in the core.

ANSWER: D.

QUESTION: 72
TOPIC: 292008
KNOWLEDGE: K1.30
QID: New

A reactor has been shutdown for several weeks when a loss of all ac power results in a loss of forced decay heat removal flow.

Given the following information, what will be the average reactor coolant heatup rate during the 20 minutes immediately after decay heat removal flow is lost? Assume that only ambient losses are removing heat from the reactor coolant system (RCS).

Reactor rated thermal power:	2800 MWt
Decay heat rate:	0.2% rated thermal power
RCS ambient heat loss rate:	2.4 MWt
RCS c_p:	1.1 Btu/lbm-°F
Reactor vessel coolant inventory:	325,000 lbm

A. < 25°F/hour

B. 26 to 50°F/hour

C. 51 to 75°F/hour

D. > 76°F/hour

ANSWER: B.

PROOF:

Net RCS heat addition	=	Decay heat input + RRP heat input - RCS heat loss
	=	[2800 MWt (0.2%) - 2.4 MWt] (3.41 x 10^6 Btu/hr/MWt)
	=	1.1 x 10^7 Btu/hr
Heatup Rate	=	Net RCS heat addition ÷ RCS mass ÷ RCS cp
	=	1.1 x 10^7 ÷ 325,000 ÷ 1.1
	=	30.7°F/hr

QUESTION: 73
TOPIC: 293001
KNOWLEDGE: K1.03
QID: B373 (P374)

Refer to the drawing of four tank differential pressure (D/P) level detectors (see figure below).

The tanks are identical and are being maintained at 17 psia and the same constant water level. They are surrounded by atmospheric pressure.

Which one of the level detectors will sense the greatest D/P?

A. No. 1

B. No. 2

C. No. 3

D. No. 4

ANSWER: B.

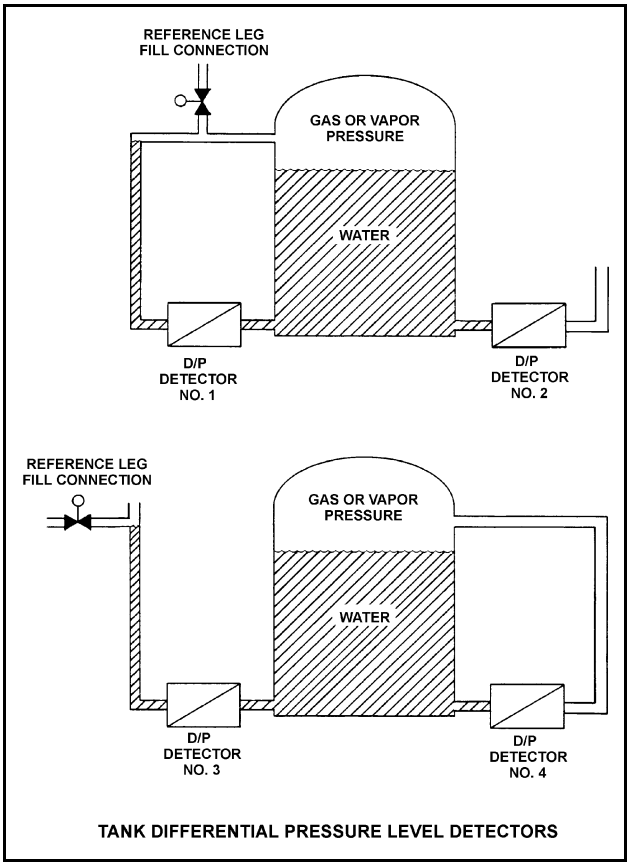

TANK DIFFERENTIAL PRESSURE LEVEL DETECTORS

QUESTION: 74
TOPIC: 293003
KNOWLEDGE: K1.12
QID: B141 (Rev) (P1976)

Which one of the following is the approximate steam quality of a steam-water mixture at 467°F with an enthalpy of 1000 Btu/lbm?

A. 24%

B. 27%

C. 73%

D. 76%

ANSWER: C.

PROOF:

$$\text{Quality} = \frac{h_{mix} - h_f}{h_{fg}}$$

$$= \frac{1000 - 449.5}{755.1}$$

$$= 72.9$$

Or from Mollier chart, steam-water mixture at 467F (500psia) with enthalpy of 1000 Btu/lbm has moisture content of ~27%. Therefore, quality is ~73%.

QUESTION: 75
TOPIC: 293003
KNOWLEDGE: K1.23
QID: B2075 (Rev)

A plant is operating at a low power level. Main steam at the main turbine steam inlet valve has the following properties:

Pressure: 900 psia
Quality: 99%

The main turbine steam chest pressure is 300 psia. Which one of the following is the approximate temperature of the steam in the steam chest?

A. 417°F

B. 439°F

C. 496°F

D. 532 °F

ANSWER: A.

PROOF:

Enthalpy of the inlet steam (900 psia and 99%) is 1186 Btu/lbm.
Enthalpy of the steam in the steam chest is also 1186 Btu/lbm because throttling is an isenthalpic process. Using the Mollier Diagram, fluid at 1186 Btu/lbm will be a saturated steam/water mixture at 300 psia. Therefore, the temperature of the mixture will be T_{sat} for 300 psia, which is 417°F.

QUESTION: 76
TOPIC: 293004
KNOWLEDGE: K1.04
QID: B376

Refer to the drawing of an operating steam-jet air ejector (see figure below).

In the figure, steam flowing from D to E undergoes a pressure _____ and a velocity _____.

A. increase; decrease

B. increase; increase

C. decrease; decrease

D. decrease; increase

ANSWER: A.

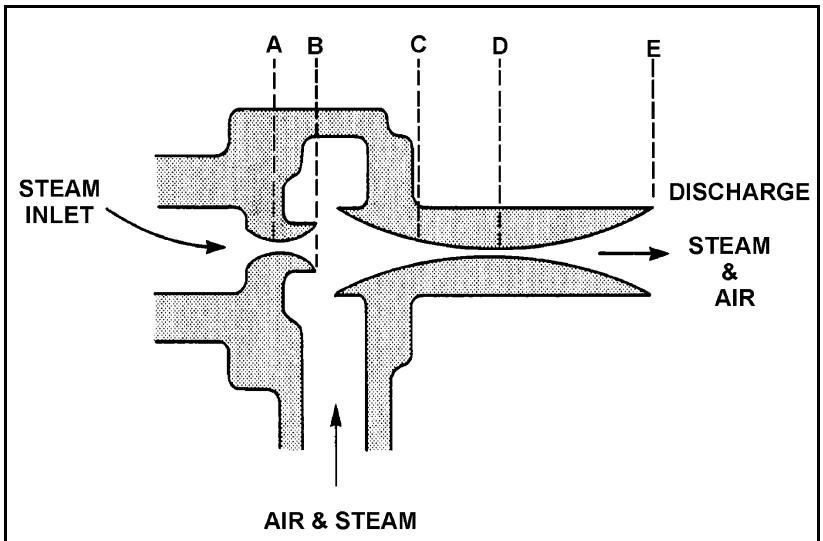

STEAM-JET AIR EJECTOR

QUESTION: 77
TOPIC: 293004
KNOWLEDGE: K1.12
QID: B2176 (Rev) (P2576)

A plant is operating at 80% power with 5°F of condensate depression in the main condenser. If the condensate depression decreases to 2°F, plant efficiency will _____ and the probability of condensate pump cavitation will _____.

A. increase; increase

B. increase; decrease

C. decrease; increase

D. decrease; decrease

ANSWER: A.

QUESTION: 78
TOPIC: 293005
KNOWLEDGE: K1.05
QID: New

Which one of the following is the reason that steam cycle efficiency improves when moisture separator/reheaters are placed in service between the high-pressure and low-pressure stages of a main turbine?

A. Results in less heat rejection from the main condenser for the same low-pressure turbine exhaust steam conditions.

B. Results in an increased mass flow rate of steam through the low-pressure turbine for the same reactor power.

C. Results in a greater fractional increase in main turbine work output than in main condenser heat rejection for the same high-pressure turbine inlet steam conditions.

D. Results in heat rejection occurring at a lower pressure in the main condenser for the same cooling water flow rate and high-pressure turbine inlet steam conditions.

ANSWER: C.

QUESTION: 79
TOPIC: 293006
KNOWLEDGE: K1.13
QID: B1780 (Rev)

Refer to the drawing of four centrifugal pump operating curves (see figure below).

A two-speed centrifugal pump is operating in low speed in a cooling water system and discharging through a heat exchanger. The pump is then switched to high speed.

Which set of curves illustrates the initial and final operating conditions?

A. 1.

B. 2.

C. 3.

D. 4.

ANSWER: B.

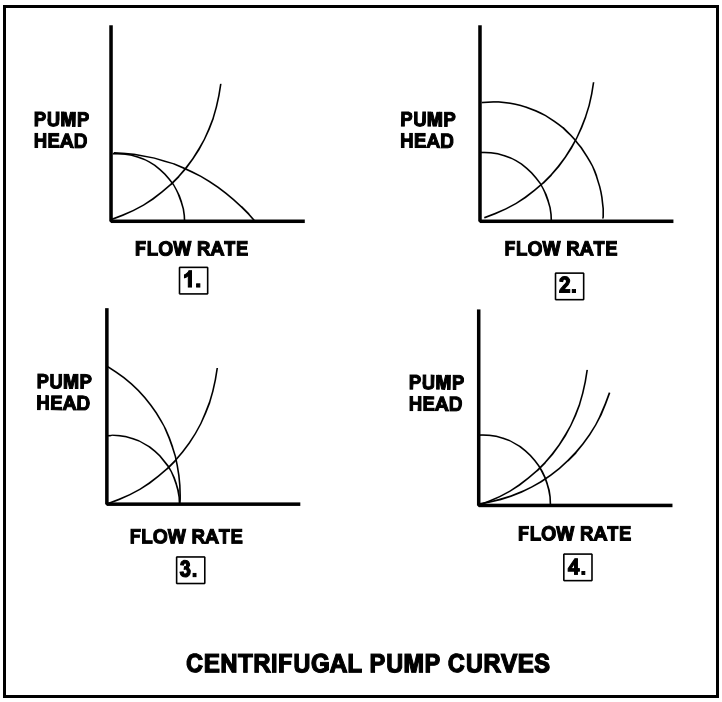

QUESTION: 80
TOPIC: 293006
KNOWLEDGE: K1.07
QID: B1280

Which one of the following describes pump head?

A. The energy added by a pump to maintain or increase fluid pressure or velocity

B. The energy added by a pump to maintain or increase fluid volume or velocity

C. The fluid energy required to ensure the pump does not cavitate

D. The fluid energy contained at the inlet of the pump

ANSWER: A.

QUESTION: 81
TOPIC: 293006
KNOWLEDGE: K1.29
QID: B2281 (P2282)

Water at 90°F and 50 psig is flowing through a 10-inch diameter pipe at 100 lbm/sec. The pipe then splits into two pipes, a 4-inch diameter pipe and an 8-inch diameter pipe.

Disregarding any flow restrictions other than pipe size, which one of the following lists the approximate flow rates through the 4-inch and 8-inch diameter pipes?

	4-inch Pipe (lbm/sec)	8-inch Pipe (lbm/sec)
A.	20	80
B.	25	75
C.	30	70
D.	33	67

ANSWER: A.

PROOF:

$m = \rho A v$
$m_1 + m_2 = 100$
$\rho A_1 v + \rho A_2 v = 100$
$\rho v(A_1 + A_2) = 100$
$\rho v(80) = 100$
$\rho v = 100/80$

$m_1 = \rho v A_1$
$m_1 = 100/80\ (16)$
$m_1 = 1600/80 = 20$ lbm/sec

$m_2 = \rho v A_2$
$m_2 = 100/80\ (64)$
$m_2 = 6400/80 = 80$ lbm/sec

QUESTION: 82
TOPIC: 293007
KNOWLEDGE: K1.01
QID: B2282 (Rev)

Which one of the following describes a heat transfer process in which conduction is the most significant heat transfer mechanism?

A. From the reactor fuel to the core barrel during core uncovery

B. From the main turbine exhaust steam to the atmosphere via main condenser cooling water and a cooling tower during normal operation

C. From the reactor fuel to the steam outlet of the reactor vessel during a station blackout

D. From a fuel pellet to the fuel clad via the fuel rod fill gas during normal operation

ANSWER: D.

QUESTION: 83
TOPIC: 293007
KNOWLEDGE: K1.07
QID: B2184 (P2181)

Which one of the following pairs of fluids undergoing heat transfer in identical heat exchangers will yield the greatest heat exchanger overall heat transfer coefficient?

A. Oil to water

B. Air to water

C. Steam to water

D. Water to water

ANSWER: C.

QUESTION: 84
TOPIC: 293007
KNOWLEDGE: K1.13
QID: B1684 (Rev) (P137)

The power range nuclear instruments have been adjusted to 100% based on a calculated heat balance. Which one of the following will result in indicated reactor power being greater than actual reactor power?

A. The operator miscalculated the enthalpy of the feed water to be 10 Btu/lbm higher than actual feed water enthalpy.

B. The reactor recirculation pump heat input term was omitted from the heat balance calculation.

C. The steam and feed water flow rates used in the heat balance calculation were 10% lower than actual flow rates.

D. The steam pressure used in the heat balance calculation was 50 psi higher than actual steam pressure.

ANSWER: B.

QUESTION: 85
TOPIC: 293008
KNOWLEDGE: K1.01
QID: B1285

For boiling to occur, the coolant adjacent to the fuel rod must have sufficient heat flux for vapor bubble formation. Select the characteristic below that will aid in bubble formation.

A. Surface scratches or cavities in the fuel clad

B. Subsurface void defect in the fuel clad

C. Increased coolant velocity past the fuel rod

D. Chemically inert material dissolved in the coolant

ANSWER: A.

QUESTION: 86
TOPIC: 293008
KNOWLEDGE: K1.04
QID: New (P1086)

How does the convective heat transfer coefficient vary from the bottom to the top of a fuel rod if subcooled reactor coolant enters the coolant channel and exits as superheated steam?

A. Increases continuously

B. Increases, then decreases

C. Decreases continuously

D. Decreases, then increases

ANSWER: B.

QUESTION: 87
TOPIC: 293008
KNOWLEDGE: K1.07
QID: New

Under constant pressure conditions, when compared to subcooled nucleate boiling, saturated nucleate boiling (bulk boiling):

A. provides a greater margin to critical heat flux.

B. is less likely to occur in the reactor vessel at 100% power.

C. results in a lower heated surface temperature for the same heat flux.

D. requires more Btu/lbm to convert water to steam at a given temperature.

ANSWER: C.

QUESTION: 88
TOPIC: 293008
KNOWLEDGE: K1.17
QID: B1891 (Rev)

A reactor is operating at steady state 90% power. Which one of the following will cause the two-phase coolant flowing upward in a fuel channel to become closer to the onset of transition boiling? (Assume reactor power does not change unless stated.)

A. Recirculation flow is slowly increased.

B. Feed water temperature slowly increases.

C. Reactor operating pressure is slowly decreased.

D. Associated bundle power slowly decreases.

ANSWER: B .

QUESTION: 89
TOPIC: 293008
KNOWLEDGE: K1.10
QID: B390

The magnitude of the local fuel pin heat flux that is necessary to cause the onset of transition boiling is:

A. largest at the top of the core and smallest at the bottom of the core.

B. largest at the bottom of the core and smallest at the top of the core.

C. largest at the core midplane and smallest at the top and bottom of the core.

D. largest at the top and bottom of the core and smallest at the core midplane.

ANSWER: B.

QUESTION: 90
TOPIC: 293008
KNOWLEDGE: K1.30
QID: B1790 (Rev)

Two reactors, A and B, are operating at rated power with neutron flux radially peaked in the center of each core. Reactors A and B are identical except that reactor A has core orificing and reactor B does not. Both reactors have the same control rod pattern and density.

Compared to the center fuel bundle in reactor A, the center fuel bundle in reactor B will have the _____ exit steam quality and the _____ critical power.

A. lower; lower

B. lower; higher

C. higher; lower

D. higher; higher

ANSWER: C.

QUESTION: 91
TOPIC: 293008
KNOWLEDGE: K1.36
QID: B1491

A reactor is operating at full power when a loss of offsite power results in a reactor scram and a loss of forced core coolant flow. Several minutes later, the development of natural circulation flow will be indicated by differential _____ across the core plate and flow through the _____ pumps.

A. pressure; jet

B. pressure; recirculation

C. temperature; jet

D. temperature; recirculation

ANSWER: A.

QUESTION: 92
TOPIC: 293009
KNOWLEDGE: K1.01
QID: B1092 (Rev)

In a reactor operating at full power, the fuel bundle with the greatest radial peaking factor always has the:

A. greatest power.

B. greatest critical power ratio.

C. smallest linear heat generation rate.

D. smallest maximum average planar linear heat generation rate.

ANSWER: A.

QUESTION: 93
TOPIC: 293009
KNOWLEDGE: K1.05
QID: B2693 (P2696)

A reactor has experienced a loss of coolant accident. Inadequate core cooling has resulted in the following core temperatures one hour into the accident:

90% of the fuel clad has remained below 1800°F
10% of the fuel clad has exceeded 1800°F
5% of the fuel clad has exceeded 2000°F
0.5% of the fuel clad has reached 2200°F
0.0% of the fuel clad has exceeded 2200°F
Peak centerline fuel temperature is 4650°F

Which one of the following is an adverse consequence that will occur if the above fuel and clad temperatures remain constant for 24 additional hours followed by the injection of emergency cooling water directly to the top of the core?

A. Release of radioactive fission products due to rupture of fuel clad

B. Release of radioactive fission products due to melting of fuel pellets and fuel clad

C. Explosive hydrogen concentration inside the reactor vessel

D. Explosive hydrogen concentration inside the reactor containment building

ANSWER: A.

PROOF:

Hydrogen production rate is relatively low at these temperatures. Fuel does not melt until approx. 4800°F at EOL (5080°F at BOL). Local fuel clad embrittlement occurs rapidly above 2000°F. Injection of cold water into the core after 24 hours will probably cause brittle failure of up to 5% of the fuel clad.

QUESTION: 94
TOPIC: 293009
KNOWLEDGE: K1.07
QID: B1093

Which one of the following is responsible for the clad failure caused by operating the reactor above the limit for linear heat generation rate?

A. Fission product gas expansion causes clad internal design pressure to be exceeded.

B. The zircaloy-steam reaction causes accelerated oxidation of the clad at high temperatures.

C. Corrosion buildup on the fuel clad surface reduces heat transfer and promotes transition boiling.

D. The difference between thermal expansion rates of the fuel pellets and the clad causes severe clad stress.

ANSWER: D.

QUESTION: 95
TOPIC: 293009
KNOWLEDGE: K1.35
QID: B397

Studies of nuclear fuel rod damage revealed that two essential criteria for pellet-clad interaction fuel damage are cladding stress and a chemical embrittling fission product interaction between two chemical agents and the zircalloy cladding.

What are the two (2) chemical agents?

A. Iodine and cadmium

B. Cadmium and bromine

C. Bromine and ruthenium

D. Ruthenium and iodine

ANSWER: A.

QUESTION: 96
TOPIC: 293009
KNOWLEDGE: K1.16
QID: B2794 (Rev)

Given the following initial core parameters for a segment of a fuel rod:

Power density = 2 kW/ft
$T_{coolant}$ = 540°F
$T_{fuel\ centerline}$ = 1800°F

Reactor power is increased such that the following core parameters now exist for the fuel rod segment:

Power density = 4 kW/ft
$T_{coolant}$ = 540°F
$T_{fuel\ centerline}$ = ?

Assuming void fraction surrounding the fuel rod segment does <u>not</u> change, what will be the new stable $T_{fuel\ centerline}$?

A. 2520°F

B. 2780°F

C. 3060°F

D. 3600°F

ANSWER: C.

PROOF:

Use $Q = k\Delta T$, where k is constant.

If Q is increased by 2, ΔT is increased by 2.

$\Delta T_2 = 2 \times \Delta T_1 = 2 \times (1800°F - 540°F) = 2520°F$

Adding 2520°F to 540°F = 3060°F

QUESTION: 97
TOPIC: 293009
KNOWLEDGE: K1.29
QID: B2496

The fuel thermal time constant specifies the amount of time required for:

A. a fuel bundle to achieve equilibrium temperature following a power change.

B. a fuel pellet to achieve equilibrium temperature following a power change.

C. the fuel centerline temperature to undergo most of its total change following a power change.

D. the fuel cladding temperature to undergo most of its total change following a power change.

ANSWER: D.

QUESTION: 98
TOPIC: 293009
KNOWLEDGE: K1.41
QID: B1098

A plant is operating at 60% reactor power. Which one of the following will result in the highest critical power ratio? (Assume neutron flux distribution does not change.)

A. 25% power increase using only recirculation flow

B. 25% power increase using only control rods

C. 25% power decrease using only recirculation flow

D. 25% power decrease using only control rods

ANSWER: D.

QUESTION: 99
TOPIC: 293010
KNOWLEDGE: K1.01
QID: B499 (P497)

Which one of the following comparisons will result in a higher probability of brittle fracture of the reactor vessel?

A. A high gamma flux rather than a high neutron flux

B. A high material strength rather than a high material ductility

C. A high coolant oxygen content rather than a low oxygen content

D. A rapid 100°F cooldown at a high temperature rather than at a low temperature

ANSWER: B.

QUESTION: 100
TOPIC: 293010
KNOWLEDGE: K1.05
QID: B2100 (Rev) (P2298)

Two identical reactors have been in operation for the last 10 years. Reactor A has experienced 40 heatup/cooldown cycles and has an average power capacity of 50%. Reactor B has experienced 30 heatup/cooldown cycles and has an average power capacity of 60%.

Which reactor will have the highest reactor vessel nil-ductility transition temperature?

A. Reactor A due to the greater number of heatup/cooldown cycles

B. Reactor A due to the lower average power capacity

C. Reactor B due to the fewer number of heatup/cooldown cycles

D. Reactor B due to the higher average power capacity

ANSWER: D.

August 31, 2000

UNITED STATES NUCLEAR REGULATORY COMMISSION
PRESSURIZED WATER REACTOR GENERIC FUNDAMENTALS EXAMINATION
JULY 2000--FORM A (with answers and proofs)

Please Print

Name: _____

Facility: _____

Docket No.: _____

Start Time: _____ Stop Time: _____

INSTRUCTIONS TO APPLICANT

Answer all the test items using the answer sheet provided. Each item has equal point value. A score of at least 80% is required to pass this portion of the written licensing examination. All examination papers will be collected 3.0 hours after the examination starts. This examination applies to a typical pressurized water reactor (PWR) power plant.

SECTION	QUESTIONS	% OF TOTAL	SCORE
COMPONENTS	1 - 44		
REACTOR THEORY	45 - 72		
THERMODYNAMICS	73 - 100		
TOTALS	100		

All work done on this examination is my own. I have neither given nor received aid.

_____
Applicant's Signature

RULES AND GUIDELINES FOR THE GENERIC FUNDAMENTALS EXAMINATION

During the administration of this examination the following rules apply:

NOTE: The generic term "control rod" refers to the length of neutron absorber material that can be positioned by the operator to change core reactivity.

1. Print your name in the blank provided on the cover sheet of the examination.

2. Fill in the name of your facility.

3. Fill in your individual docket number.

4. Fill in your start and stop times at the appropriate time.

5. Two aids are provided for your use during the examination:

   (1) An equations and conversions sheet contained within the examination copy, and

   (2) Steam tables provided by your proctor.

6. Place your answers on the answer sheet provided. Credit will only be given for answers properly marked on this sheet. Follow the instructions for filling out the answer sheet.

7. Scrap paper will be provided for calculations.

8. Cheating on the examination will result in the automatic forfeiture of this examination. Cheating could also result in severe penalties.

9. Restroom trips are limited. Only **ONE** examinee may leave the room at a time. In order to avoid the appearance or possibility of cheating, avoid all contact with anyone outside of the examination room.

10. After you have completed the examination, sign the statement on the cover sheet indicating that the work is your own and you have not received or been given any assistance in completing the examination.

11. Turn in your examination materials, answer sheet on top, followed by the examination booklet, then examination aids - steam table booklets, handouts, and scrap paper used during the examination.

12. After turning in your examination materials, leave the examination area, as defined by the proctor. If after leaving you are found in the examination area while the examination is in progress, your examination may be forfeited.

GENERIC FUNDAMENTALS EXAMINATION
EQUATIONS AND CONVERSIONS HANDOUT SHEET

EQUATIONS

$\dot{Q} = \dot{m}c_p\Delta T$

$\dot{Q} = \dot{m}\Delta h$

$\dot{Q} = UA\Delta T$

$\dot{Q} \propto \dot{m}^3_{Nat\ Circ}$

$\Delta T \propto \dot{m}^2_{Nat\ Circ}$

$K_{eff} = 1/(1 - \rho)$

$\rho = (K_{eff} - 1)/K_{eff}$

$SUR = 26.06/\tau$

$$\tau = \frac{\overline{\beta} - \rho}{\lambda_{eff}\ \rho}$$

$$\rho = \frac{\ell^*}{\tau} + \frac{\overline{\beta}}{1 + \lambda_{eff}\tau}$$

$\ell^* = 1 \times 10^{-4}$ seconds

$\lambda_{eff} = 0.1$ seconds^{-1}

$DRW \propto \varphi^2_{tip}/\varphi^2_{avg}$

$P = P_o 10^{SUR(t)}$

$P = P_o e^{(t/\tau)}$

$A = A_o e^{-\lambda t}$

$CR_{S/D} = S/(1 - K_{eff})$

$CR_1(1 - K_{eff1}) = CR_2(1 - K_{eff2})$

$1/M = CR_1/CR_X$

$A = \pi r^2$

$F = PA$

$\dot{m} = \rho A\vec{v}$

$\dot{W}_{Pump} = \dot{m}\Delta P\upsilon$

$E = IR$

Eff. = Net Work Out/Energy In

$$\upsilon(P_2 - P_1) + \frac{(\vec{v}_2^{\,2} - \vec{v}_1^{\,2})}{2g_c} + \frac{g(z_2 - z_1)}{g_c} = 0$$

$g_c = 32.2$ lbm-ft/lbf-sec^2

CONVERSIONS

---

1 Mw	= 3.41×10^6 Btu/hr	1 Curie	= 3.7×10^{10} dps
1 hp	= 2.54×10^3 Btu/hr	1 kg	= 2.21 lbm
1 Btu	= 778 ft-lbf	1 gal_{water}	= 8.35 lbm
°C	= (5/9)(°F - 32)	1 ft^3_{water}	= 7.48 gal
°F	= (9/5)(°C) + 32		

QUESTION: 1
TOPIC: 191001
KNOWLEDGE: K1.01
QID: P1903 (Rev)

A vertical safety valve with a 2-inch diameter disk has a compressed spring applying 2,400 lbf to the top of the valve disk in opposition to system pressure. Which one of the following is the approximate system pressure at which the safety valve will open?

A. 95 psig

B. 191 psig

C. 382 psig

D. 764 psig

ANSWER: D.

PROOF:

$F = PA \qquad P = 2400/(\pi)(1^2)$

$P = F/A \qquad = 763.9$

QUESTION: 2
TOPIC: 191001
KNOWLEDGE: K1.02
QID: P2501 (B2501)

Water storage tanks A and B are identical except that tank A receives overpressure protection from an installed relief valve. Tank B has an installed safety valve. The relief valve and safety valve have the same pressure set point and design flow rate.

Water is continuously added to each tank at the same rate (50% of the design flow rate of the relief/safety valve). After tank pressure reaches the set point for each valve, tank A pressure will _____ and tank B pressure will _____.

A. stabilize slightly above the pressure setpoint; stabilize slightly above the pressure setpoint

B. stabilize slightly above the pressure setpoint; fluctuate within a few percent of the pressure setpoint

C. fluctuate within a few percent of the pressure setpoint; stabilize slightly above the pressure setpoint

D. fluctuate within a few percent of the pressure setpoint; fluctuate within a few percent of the pressure setpoint

ANSWER: B.

QUESTION: 3
TOPIC: 191001
KNOWLEDGE: K1.05
QID: P201 (B206)

An operator attempts to close a fully-open upright manual gate valve to isolate a pump in a cooling water system that has been cooled down for maintenance. However, the operator is unable to rotate the handwheel in the close direction.

Which one of the following could cause this condition?

A. A hydraulic lock has developed under the valve disk.

B. A hydraulic lock has developed in the valve bonnet between the valve disk and the packing gland.

C. The two halves of the valve disk have expanded and are jammed against the valve seats.

D. The valve disk has jammed against its backseat by the difference in the thermal contraction of the stem and the bonnet.

ANSWER: D.

QUESTION: 4
TOPIC: 191001
KNOWLEDGE: K1.08
QID: P2004 (Rev)

When comparing a typical gate valve to a typical globe valve in the same application with both valves 50% open, the gate valve has a _____ pressure drop and is the better choice for _____ flow in high-pressure fluid systems.

A. larger; throttling

B. larger; isolating

C. smaller; throttling

D. smaller; isolating

ANSWER: D.

QUESTION: 5
TOPIC: 191002
KNOWLEDGE: K1.02
QID: P705 (B708)

A steam flow measuring instrument uses density compensation and square root compensation to convert the differential pressure across the flow element to lbm/hr.

The purpose of square root compensation in this flow measuring instrument is to convert _____ to _____.

A. volumetric flow rate; mass flow rate

B. volumetric flow rate; differential pressure

C. differential pressure; mass flow rate

D. differential pressure; volumetric flow rate

ANSWER: D.

QUESTION: 6
TOPIC: 191002
KNOWLEDGE: K1.10
QID: P2109 (B2109)

A centrifugal pump is taking suction from the bottom of a vented cylindrical storage tank that contains 100,000 gallons of water at 60°F. A pressure gauge at the inlet to the pump indicates 40 psig. Over the next several days storage tank temperature increases to 90°F with no change in tank water level and no change in head loss in the pump suction line.

Which one of the following is the current approximate pressure at the inlet to the pump?

A. 39.8 psig

B. 37.4 psig

C. 34.6 psig

D. 31.2 psig

ANSWER: A.

PROOF:

υ = 0.016033 @ 60°F, 0.016099 @ 90°F

$\rho = 1/\upsilon$ 62.37 @ 60°F, 62.11 @ 90°F

$P_{inlet} = P_{atmos} + P_{height} - P_{losses}$

Since P_{atmos} and P_{losses} did not change, ΔP_{inlet} is proportional to ΔP_{height}.

Since $\Delta P_{height} = \Delta height * \Delta density$, and since $\Delta height$ does not change, ΔP_{height} decreases directly with $\Delta density$.

Since $\%\Delta density = [62.37-62.11]/62.37 = 0.42\%$, final P_{inlet} = 40 psig - [0.0042 * 40 psig] = 39.8 psig

QUESTION: 7
TOPIC: 191002
KNOWLEDGE: K1.04
QID: P1007 (Rev)

Refer to the drawing of a pipe elbow used for flow measurement (see figure below).

At which one of the following locations is the highest pressure sensed? (Assume a constant pipe diameter and zero head loss in this section of pipe.)

A. Point A

B. Point B

C. Point C

D. Point D

ANSWER: C.

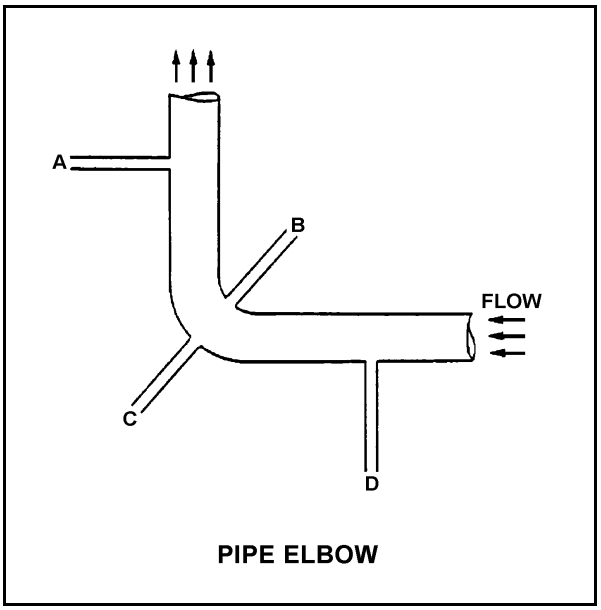

QUESTION: 8
TOPIC: 191002
KNOWLEDGE: K1.05
QID: P2507 (Rev)

A differential pressure detector is being used with an orifice plate to measure water flow rate through a pipe. When the flow detector was last calibrated, the following parameters were observed:

Upstream Pressure:	135 psig
Downstream Pressure:	120 psig
Actual Flow Rate:	100 gpm
Indicated Flow Rate:	100 gpm

Significant erosion of the orifice plate opening has occurred since the last calibration such that actual flow rate through the orifice has increased to 120 gpm while the upstream and downstream pressures have changed to 1
psig and 109 psig respectively.

What is the approximate currently indicated flow rate?

A. 44 gpm

B. 67 gpm

C. 100 gpm

D. 120 gpm

ANSWER: C.

PROOF:

$$\frac{\text{Flow}_1}{\text{Flow}_2} = \frac{\sqrt{\Delta P_1}}{\sqrt{\Delta P_2}}$$

$$\frac{100}{x} = \frac{\sqrt{15}}{\sqrt{15}}$$

$$x = 100\,\text{gpm}$$

QUESTION: 9
TOPIC: 191002
KNOWLEDGE: K1.06
QID: P1107 (B1507)

Refer to the drawing of two tank differential pressure (D/P) level indicators (see figure below).

Two D/P level indicators are installed on a large water storage tank. Indicator 1 was calibrated at 100°F water temperature and indicator 2 was calibrated at 200°F water temperature.

Assuming both indicators are on scale, which indicator will indicate the lower level?

A. Indicator 1 at all water temperatures

B. Indicator 2 at all water temperatures

C. Indicator 1 below 150°F, indicator 2 above 150°F

D. Indicator 2 below 150°F, indicator 1 above 150°F

ANSWER: A.

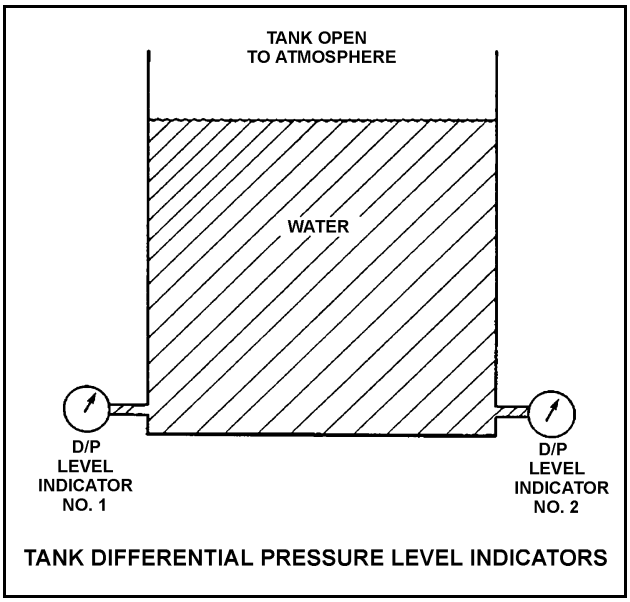

TANK DIFFERENTIAL PRESSURE LEVEL INDICATORS

QUESTION: 10
TOPIC: 191002
KNOWLEDGE: K1.08
QID: New

Refer to the drawing of a pressurizer level detection system (see figure below). The differential pressure (D/P) detector was calibrated while the plant was at normal operating conditions.

With the plant initially at normal operating conditions, a pressurizer steam space leak has occurred. The pressurizer pressure has decreased by 300 psia, and ambient air temperature surrounding the reference leg has increased by 80°F, where these parameters have stabilized.

If the actual pressurizer level is 60%, the reduced pressurizer pressure will tend to make the indicated pressurizer level read _____ than actual; the increased reference leg temperature will tend to make the indicated pressurizer level read _____ than actual.

A. higher; higher

B. higher; lower

C. lower; higher

D. lower; lower

ANSWER: A.

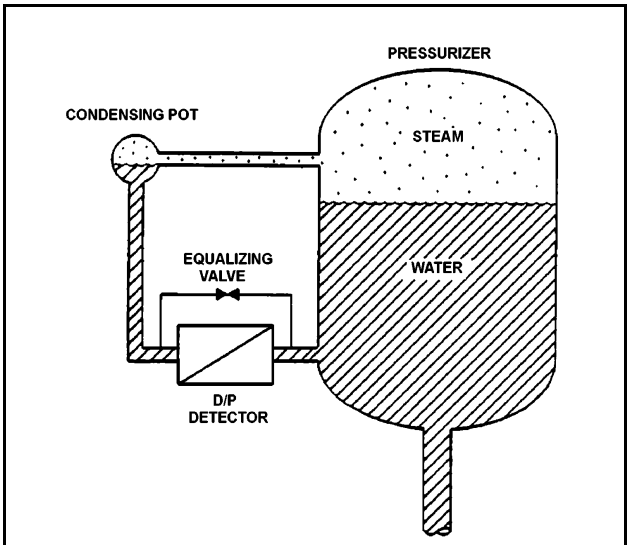

PRESSURIZER DIFFERENTIAL PRESSURE LEVEL DETECTOR

QUESTION: 11
TOPIC: 191002
KNOWLEDGE: K1.13
QID: P2409 (B2412)

What is the purpose of the reference junction panel provided with many thermocouple circuits?

A. The panel provides a common location to connect the thermocouple leads to extension wires to ensure that thermocouple accuracy is not affected by temperature changes away from the measuring junction.

B. The panel provides a common location to connect the thermocouple leads to extension wires to ensure that thermocouple accuracy is not affected by different lengths of thermocouple extension wires.

C. The panel provides a common location near the thermocouples to connect the thermocouple leads to extension wires while reducing thermocouple inaccuracies due to electrical noise.

D. The panel provides a common location near the thermocouples to connect the thermocouple leads to extension wires and amplify the thermocouple outputs for use by temperature indication devices.

ANSWER: A.

QUESTION: 12
TOPIC: 191002
KNOWLEDGE: K1.17
QID: P415 (Rev)

A plant has experienced a loss of coolant accident combined with a loss of safety injection flow. Homogeneous core voiding has occurred, with the void fraction currently nearing 100%. Now, minimum safety injection flow has been restored, which has initiated a steady reduction in the core void fraction as the core is refilled.

Which one of the following describes the expected trend in excore source/startup range neutron level indication as the homogeneous core void fraction decreases from 100% to 20% in the core and downcomer? (Assume the source/startup range neutron detectors are located adjacent to the bottom third of the core.)

A. Decreases continuously

B. Decreases, then increases

C. Increases continuously

D. Increases, then decreases

ANSWER: D.

QUESTION: 13
TOPIC: 191002
KNOWLEDGE: K1.16
QID: New

Refer to the simplified drawing of a control rod position detector circuit (see figure below).

A magnet on the control rod extension (or drive) shaft sequentially closes individual reed switches mounted vertically adjacent to the control rod drive housing. A constant +5 dc voltage is supplied to the input of the resistor network at resistor R_1.

A control rod is initially fully inserted such that all reed switch contacts are open; then the rod is withdrawn such that reed switch contact S_1 is closed. Compared to the initial circuit currents, the current through resistor R_4 after the rod withdrawal will be _____, and the output current of the resistor network to the amplifier will be _____.

A. lower, higher

B. lower, lower

C. higher, higher

D. higher, lower

ANSWER: A.

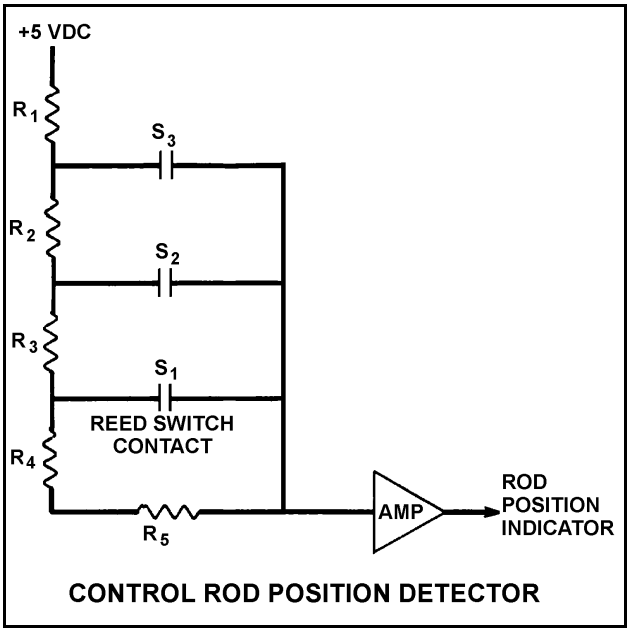

CONTROL ROD POSITION DETECTOR

QUESTION: 14
TOPIC: 191002
KNOWLEDGE: K1.18
QID: P2014 (B2413)

What is the effect on a proportional neutron detector if it is operated at a voltage near the high end of the proportional region on the gas-filled detector characteristic curve?

A. Detection of any single ionizing event will result in ionizing nearly the entire detector gas volume, resulting in the inability to differentiate between radiation types, yielding a less accurate neutron count rate.

B. A high gamma radiation field will result in multiple small gamma pulses that combine to form larger pulses, which will be counted as neutron pulses, yielding a less accurate neutron count rate.

C. Neutron pulses will become so large that gamma pulse discrimination is no longer needed, yielding a more accurate neutron count rate.

D. The positive space charge effect will increase and prevent collection of both gamma and neutron pulses, yielding a less accurate neutron count rate.

ANSWER: B.

QUESTION: 15
TOPIC: 191003
KNOWLEDGE: K1.01
QID: P17 (B15/B144)

The difference between the set point in an automatic controller and the steady-state value of the measured parameter is called:

A. offset.

B. gain.

C. deadband.

D. feedback.

ANSWER: A.

QUESTION: 16
TOPIC: 191003
KNOWLEDGE: K1.04
QID: P1715 (B1914)

Refer to the drawing of a lube oil temperature control system (see figure below).

Which one of the following describes the type of control used in the lube oil temperature control system?

A. Open loop, because lube oil temperature feedback is being provided to the controller from the lube oil temperature transmitter

B. Open loop, because lube oil temperature is being controlled by positioning a flow control valve in a separate system

C. Closed loop, because lube oil temperature feedback is being provided to the controller from the lube oil temperature transmitter

D. Closed loop, because lube oil temperature is being controlled by positioning a flow control valve in a separate system

ANSWER: C.

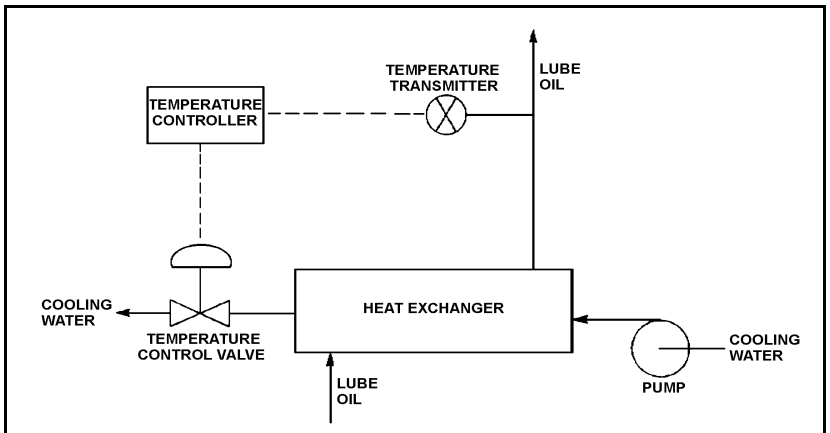

LUBE OIL TEMPERATURE CONTROL SYSTEM

QUESTION: 17
TOPIC: 191003
KNOWLEDGE: K1.03
QID: P2117

Refer to the drawing of a pneumatic control system (see figure below).

An increasing steam generator (S/G) level will decrease the S/G level control signal and reduce the control air pressure applied to the feed control valve which reduces feedwater flow to the S/G.

If the level control signal fails high, S/G level will _____ because the control air pressure to the valve positioner will _____.

A. increase; increase

B. increase; decrease

C. decrease; increase

D. decrease; decrease

ANSWER: A.

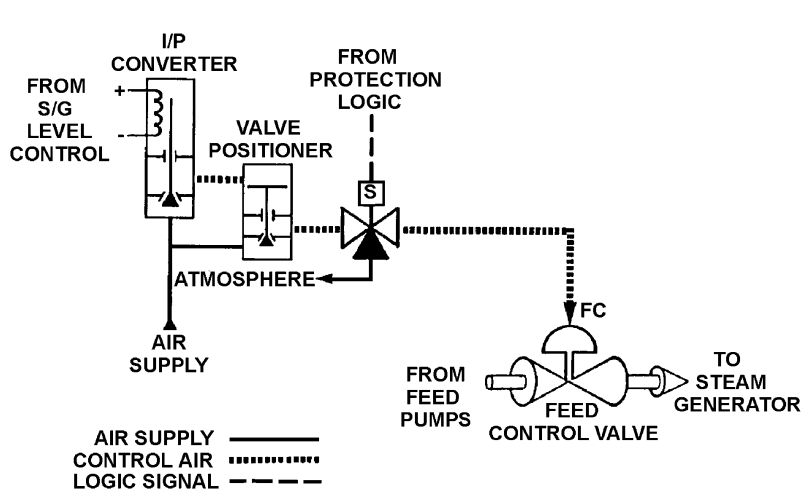

PNEUMATIC CONTROL SYSTEM - PWR

QUESTION: 18
TOPIC: 191003
KNOWLEDGE: K1.06
QID: P2018 (Rev)

A diesel generator (DG) is supplying an isolated electrical bus with the governor operating in the speed droop mode. Assuming the DG does not trip, if a large electrical bus load trips, generator frequency will:

A. initially increase, then decrease and stabilize below the initial value.

B. initially increase, then decrease and stabilize at the initial value.

C. initially increase, then decrease and stabilize above the initial value.

D. remain constant during and after the load trip.

ANSWER: C.

QUESTION: 19
TOPIC: 191003
KNOWLEDGE: K1.09
QID: P2319 (Rev)

The level in a drain collection tank is being controlled by an automatic level controller and is initially at the controller set point. Flow rate into the tank increases, slowly at first, and then faster until a stable flow rate is attained.

As tank level increases, the controller slowly opens a tank drain valve. The level controller output signal increases both as the tank level increases and as the rate of tank level change quickens. After a few minutes, a new, steady-state tank level above the original level is established, with the drain flow rate equal to the supply flow rate.

The controller in this system uses _____ control.

A. proportional only

B. proportional plus derivative

C. proportional plus integral

D. proportional plus integral plus derivative

ANSWER: B.

QUESTION: 20
TOPIC: 191004
KNOWLEDGE: K1.04
QID: P2322 (Rev)

A centrifugal fire water pump takes a suction on an open storage tank and discharges through a fire hose. Which one of the following will cause the pump to operate at shutoff head?

A. A firefighter inadvertently severs the fire hose.

B. The fire hose becomes partially crimped in a fire door.

C. Fire water storage tank level drops below the pump suction tap.

D. A firefighter adjusts the fire hose nozzle spray pattern from “deluge” to “off”.

ANSWER: D.

QUESTION: 21
TOPIC: 191004
KNOWLEDGE: K1.07
QID: New

An ac motor-driven centrifugal charging pump is being started for weekly equipment shifts. During this start, motor current remains peaked for 6 seconds before decreasing to standard running current; normally, the starting current peak lasts about 4 seconds.

Which one of the following would cause the extended duration of the starting current peak?

D. The pump shaft was seized and did not turn.

E. The pump was initially rotating slowly in the reverse direction.

F. The pump discharge check valve was stuck and did not open.

G. The pump was initially air bound, and then primed itself after 6 seconds of operation.

ANSWER: B.

QUESTION: 22
TOPIC: 191004
KNOWLEDGE: K1.12
QID: P1721 (B1024)

Refer to the drawing of a centrifugal pump operating curve (see figure below).

Which point represents pump operation at runout conditions?

A. Point A

B. Point B

C. Point C

D. Point D

ANSWER: C.

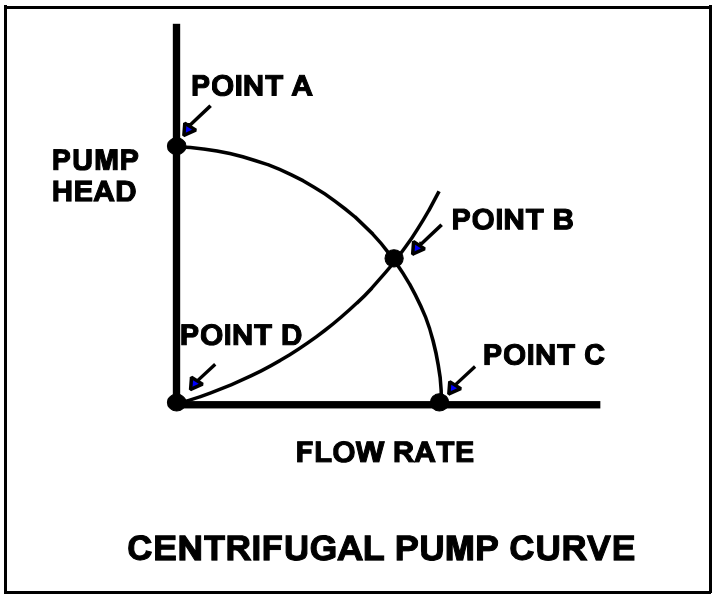

QUESTION: 23
TOPIC: 191004
KNOWLEDGE: K1.14
QID: P1724 (Rev)

Refer to the drawing of four centrifugal pump operating curves (see figure below).

A two-speed centrifugal pump is operating in low speed in a cooling water system and discharging through a heat exchanger. The pump is then switched to high speed.

Which set of curves illustrates the initial and final operating conditions?

A. 1.

B. 2.

C. 3.

D. 4.

ANSWER: B.

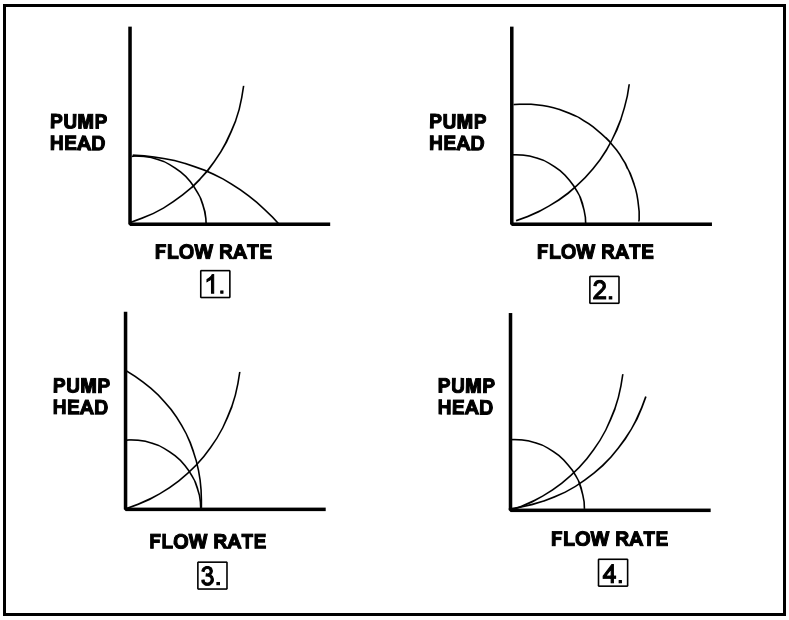

QUESTION: 24

DELETED

QUESTION: 25
TOPIC: 191004
KNOWLEDGE: K1.16
QID: P1725 (B1722)

A typical single-stage radial-flow centrifugal pump is being returned to service following maintenance on its ac motor. Which one of the following will occur when the pump is started if two of the three motor power leads were inadvertently swapped during restoration?

A. The motor breaker will trip on instantaneous overcurrent.

B. The motor will not turn and will emit a humming sound.

C. The motor will rotate in the reverse direction with reduced or no flow rate.

D. The motor will rotate in the normal direction with reduced flow rate.

ANSWER: C.

QUESTION: 26
TOPIC: 191004
KNOWLEDGE: K1.22
QID: P2626 (Rev)

A section of reactor coolant piping is being hydrostatically tested to 2900 psig using a positive displacement pump. The operating characteristics of the positive displacement pump are shown below, identifying ideal, expected, and actual pump performance during the test.

Which one of the following could have caused the observed difference between the expected and the actual pump performance?

A. Available NPSH decreased to slightly above the required NPSH for the pump.

B. Available NPSH decreased to slightly below the required NPSH for the pump.

C. A relief valve on the pump discharge piping failed to open at its set point of 2900 psig.

D. A relief valve on the pump discharge piping opened prior to its set point of 2900 psig.

ANSWER: B.

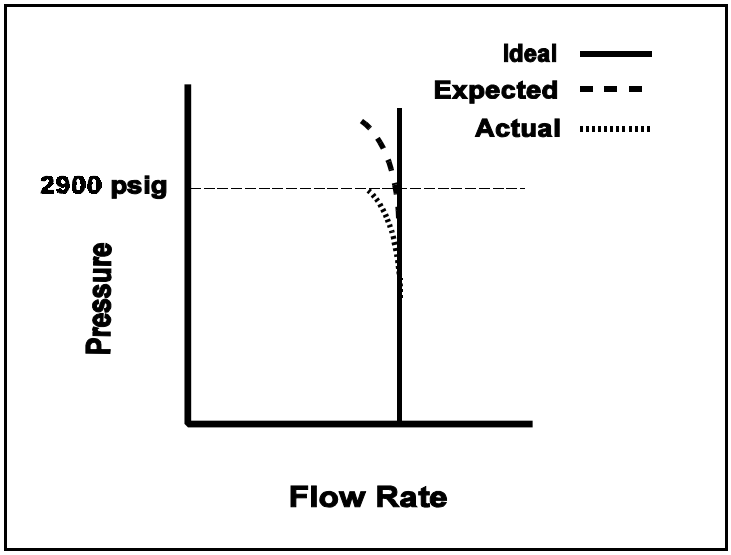

QUESTION: 27
TOPIC: 191005
KNOWLEDGE: K1.01
QID: P 2127 (Rev) (B1726)

A cooling water pump is being driven by an ac induction motor. Which one of the following describes how and why pump motor current will change if the pump shaft shears?

A. Decreases due to decreased pump work

B. Decreases due to decreased counter electromotive force

C. Increases due to increased pump work

D. Increases due to increased counter electromotive force

ANSWER: A.

QUESTION: 28
TOPIC: 191005
KNOWLEDGE: K1.03
QID: P1428 (B1830)

A main generator is operating on the grid with the following indications:

600 MWe
100 MVAR (VARs in)
13,800 amps
25,000 volts

If main generator excitation is increased slightly, amps will _____ and MWe will _____.

A. decrease; increase

B. increase; increase

C. decrease; remain the same

D. increase; remain the same

ANSWER: C.

QUESTION: 29
TOPIC: 191005
KNOWLEDGE: K1.04
QID: P328 (B326)

A centrifugal pump is operating with the following parameters:

Speed	= 1,800 rpm
Current	= 40 amperes
Pump head	= 20 psi
Pump flow rate	= 400 gpm

What will be the new value of pump head and current if the speed is increased to 2,000 rpm?

A. 22 psi, 49 amps

B. 22 psi, 55 amps

C. 25 psi, 49 amps

D. 25 psi, 55 amps

ANSWER: D.

PROOF:

$$\frac{N_1^3}{N_2^3} = \frac{Power_1}{Power_2} = \frac{\sqrt{3}VIpf_1}{\sqrt{3}VIpf_2}$$

$$\frac{N_1^3}{N_2^3} = \frac{I_1}{I_2}$$

$$I_2 = I_1\left(\frac{N_2}{N_1}\right)^3$$

$$I_2 = 40\left(\frac{2000}{1800}\right)^3$$

$$= 54.9$$

$$I_2 = 55 \text{ amps}$$

$$\frac{H_{P1}}{H_{P2}} = \frac{N_1^2}{N_2^2}$$

$$H_{P2} = H_{P1}\left(\frac{N_2}{N_1}\right)^2$$

$$H_{P2} = 20\left(\frac{2000}{1800}\right)^2$$

$$= 24.7$$

$$H_{P2} = 25 \text{ psi}$$

QUESTION: 30
TOPIC: 191005
KNOWLEDGE: K1.05
QID: P2230 (Rev)

Two identical 4160 Vac induction motors are connected to identical centrifugal pumps being used to provide cooling water flow in separate identical systems in a power plant. Each motor is rated at 1000 hp. The discharge valve for pump A is fully shut and the discharge valve for pump B is fully open.

If each motor is then started, the longer time period required to stabilize motor current will be experienced by motor _____ and the higher stable motor current will be experienced by motor _____.

A. A; A

B. A; B

C. B; A

D. B; B

ANSWER: D.

QUESTION: 31
TOPIC: 191005
KNOWLEDGE: K1.06
QID: P2531 (B2528)

Frequent starts of large motors will result in overheating of the motor windings due to high current flow caused by:

A. low electrical resistance of the motor windings.

B. an electrical short circuit between the rotor and stator.

C. high counter electromotive force at low rotor speeds.

D. windage losses between the rotor and stator.

ANSWER: A.

QUESTION: 32
TOPIC: 191006
KNOWLEDGE: K1.09
QID: P432 (Rev) (B633)

Steam has been admitted to a condenser for 25 minutes with no cooling water during a condenser startup. Initiating cooling water at this time will:

A. reduce the stress on the condenser shell because the shell has been pre-warmed.

B. reduce the stress on the condenser tubes by gradually cooling the tubes.

C. induce large thermal stresses on the junctions between the condenser tubes and the tubesheet.

D. induce large thermal stresses on the condenser shell.

ANSWER: C.

QUESTION: 33
TOPIC: 191006
KNOWLEDGE: K1.04
QID: P732 (B1834)

Refer to the drawing of a water cleanup system (see figure below).

Valves A, B, and C are fully open. Valve D is 80% open. All temperatures are as shown. If valve D is then throttled to 50%, the temperature at point:

A. 3 will decrease.

B. 4 will increase.

C. 5 will increase.

D. 6 will decrease.

ANSWER: B.

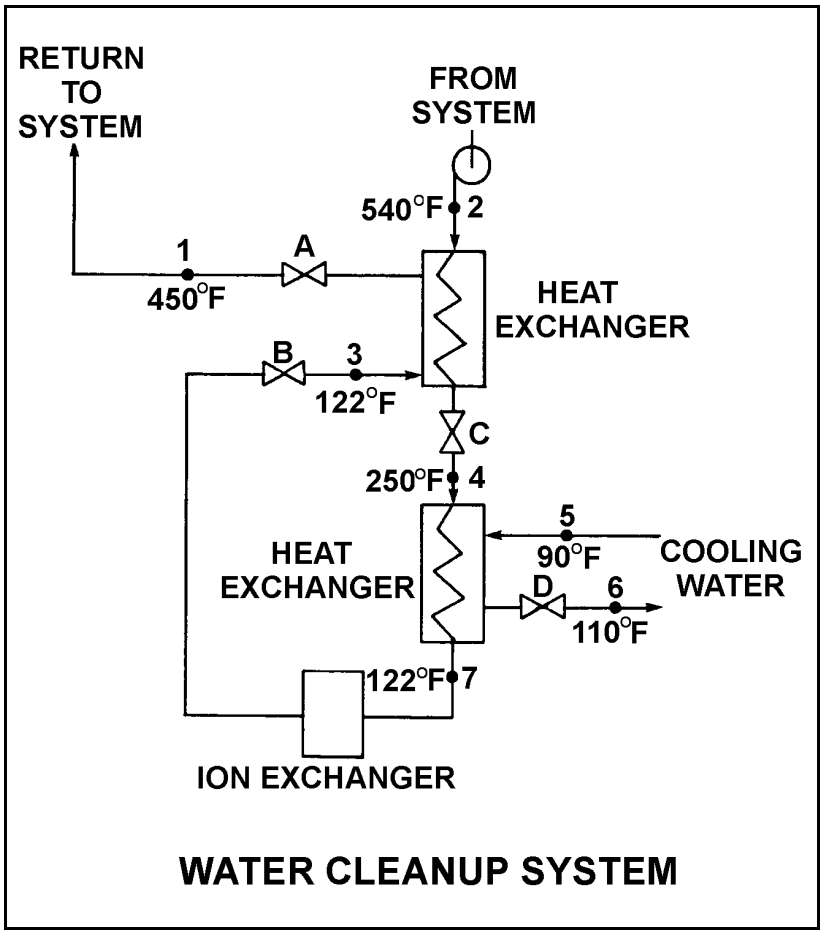

QUESTION: 34
TOPIC: 191006
KNOWLEDGE: K1.14
QID: P1834 (Rev) (B2235)

A plant is operating at 100% power when air inleakage results in the buildup of noncondensible gases in the main condenser. Which one of the following will occur as a result of this air inleakage?

A. Decreased condensate temperature

B. Decreased pressure in the main condenser

C. Decreased suction pressure at the condensate pumps

D. Decreased condenser cooling water outlet temperature

ANSWER: D.

QUESTION: 35
TOPIC: 191007
KNOWLEDGE: K1.06
QID: P836 (B539)

A lower than expected differential pressure across a demineralizer is an indication of:

A. depletion of the cation resin.

B. channeling through the resin bed.

C. improper resin regeneration.

D. excessive accumulation of suspended solids.

ANSWER: B.

QUESTION: 36
TOPIC: 191007
KNOWLEDGE: K1.08
QID: P2437 (Rev) (B2138)

Which one of the following will decrease the time required for a demineralizer to reduce the ionic impurities in a closed process water system?

A. Reverse the flow of process water through the demineralizer.

B. Divert 50% of the process water flow to bypass the demineralizer.

C. Increase the flow rate of the process water from 95 gpm to 105 gpm .

D. Decrease the temperature of the process water from 110°F to 100°F.

ANSWER: C.

QUESTION: 37
TOPIC: 191007
KNOWLEDGE: K1.08
QID: New

A PWR plant has two identical mixed resin bed ion exchangers, which were each conditioned and placed in parallel service continuously for about two weeks with the plant at full power after a refueling outage. Then, ion exchanger A was isolated for standby use while ion exchanger B remained in service. After 10 months of continuous operation at full power it is necessary to place ion exchanger A in service and isolate ion exchanger B.

Which one of the following describes why ion exchanger A is initially placed in service with a small coolant flow rate rather than immediately admitting full flow?

A. Avoids an undesired decrease in reactor coolant pH.

B. Avoids an undesired increase in reactor coolant pH.

C. Avoids an undesired decrease in reactor coolant boron concentration.

D. Avoids an undesired increase in reactor coolant boron concentration.

ANSWER: D.

QUESTION: 38
TOPIC: 191008
KNOWLEDGE: K1.04
QID: P2540 (Rev)

Two identical 1000 MW electrical generators are operating in parallel supplying the same isolated electrical bus. The generator output breakers also provide identical protection for the generators. Generator A and B output indications are as follows:

Generator A	Generator B
22 KV	22 KV
60.2 Hertz	60.2 Hertz
800 MW	800 MW
50 MVAR (out)	25 MVAR (in)

A malfunction causes the voltage regulator setpoint for generator B to slowly increase continuously toward a maximum of 25 KV. If no operator action is taken, generator B output current will:

A. initially decrease, and then increase until the output breaker for generator A trips on overcurrent.

B. initially decrease, and then increase until the output breaker for generator B trips on overcurrent.

C. increase continuously until the output breaker for generator A trips on overcurrent.

D. increase continuously until the output breaker for generator B trips on overcurrent.

ANSWER: B.

QUESTION: 39
TOPIC: 191008
KNOWLEDGE: K1.06
QID: P2640 (Rev)

Refer to the drawing of a valve motor control circuit (see figure below) for a valve that is currently fully closed and has a 10-second stroke time. (Note: "LS" contacts are not necessarily shown in their current condition.)

The operator takes the control switch to "Open". Two seconds later, after verifying the valve is opening, the operator releases the control switch. Which one of the following describes the valve motor control circuit alarm response after the switch is released?

A. The alarm will continue to actuate for approximately 8 seconds.

B. The alarm will continue to actuate until additional operator action is taken.

C. The alarm will actuate after approximately 8 seconds.

D. The alarm will <u>not</u> actuate until additional operator action is taken.

ANSWER: A.

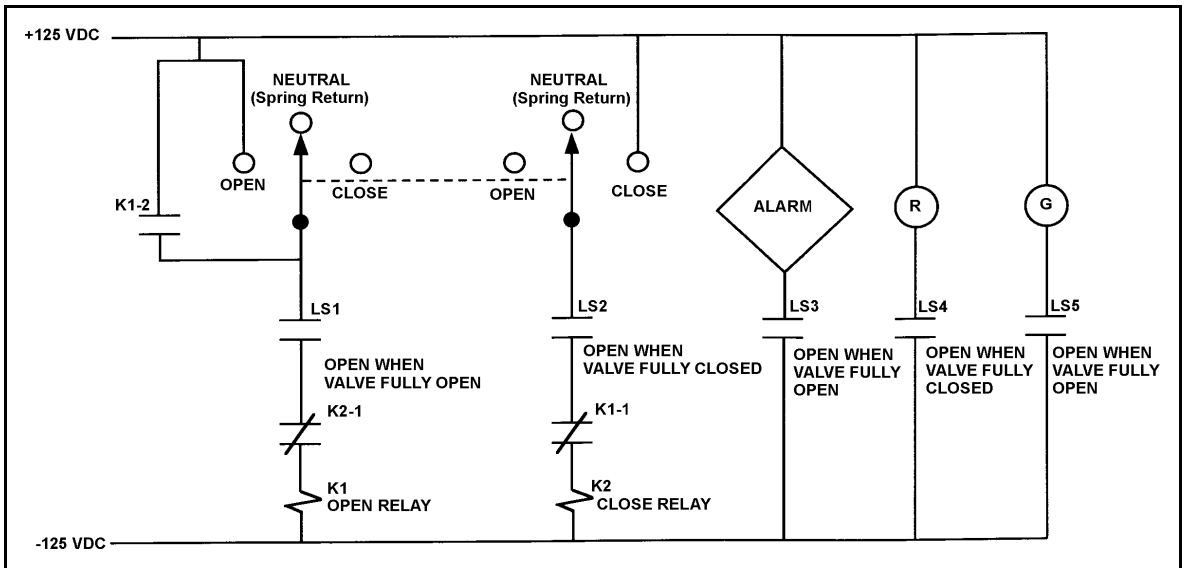

VALVE MOTOR CONTROL CIRCUIT

QUESTION: 40
TOPIC: 191008
KNOWLEDGE: K1.02
QID: P838 (B1940)

Which one of the following describes the normal operation of a local breaker overcurrent trip flag indicator?

A. Actuates when no lockout is present; satisfies an electrical interlock to remotely close a breaker.

B. Actuates when a breaker overcurrent trip has occurred; can be manually reset when the overcurrent condition clears.

C. Actuates when a breaker has failed to trip on an overcurrent condition; can be manually reset when the overcurrent condition clears.

D. Actuates to cause a breaker trip when the overcurrent trip setpoint is reached; can be remotely reset when the overcurrent condition clears.

ANSWER: B.

QUESTION: 41
TOPIC: 191008
KNOWLEDGE: K1.08
QID: P1143 (B1143)

A three-phase ac generator is being paralleled to the grid with the following conditions:

Generator frequency:	59.5 Hz
Grid frequency:	59.8 Hz
Generator voltage:	115.1 Kv
Grid voltage:	114.8 Kv

When the generator output breaker is closed the generator will:

A. acquire real load and reactive load.

B. acquire real load but become a reactive load to the grid.

C. become a real load to the grid but acquire reactive load.

D. become a real load and a reactive load to the grid.

ANSWER: C.

QUESTION: 42
TOPIC: 191008
KNOWLEDGE: K1.10
QID: P1840 (B1544)

Typical main transformer high voltage electrical disconnects are designed to:

A. automatically protect the transformer from overcurrent conditions.

B. automatically trip open prior to transformer output breaker trip.

C. manually isolate the transformer during no-load conditions.

D. manually interrupt the transformer output circuit under load when grounds are detected.

ANSWER: C.

QUESTION: 43
TOPIC: 191008
KNOWLEDGE: K1.11
QID: P1932 (B2640)

While remotely investigating the condition of a normally-open 480 vac motor control center (MCC) feeder breaker, an operator observes the following indications:

Green breaker position indicating light is out.
Red breaker position indicating light is lit.
MCC voltmeter indicates 480 vac voltage.
MCC ammeter indicates zero amperes.

Based on these indications, the operator should report that the circuit breaker is _____ and racked _____.

A. open; in

B. closed; in

C. open; to the test position

D. closed; to the test position

ANSWER: B.

QUESTION: 44
TOPIC: 191008
KNOWLEDGE: K1.12
QID: P2644 (B2242)

Thermal overload devices will provide the first electrical protection for a pump motor in the event of:

A. a locked rotor upon starting.

B. an electrical short circuit.

C. gradual motor bearing damage.

D. a sheared shaft during operation.

ANSWER: C.

QUESTION: 45
TOPIC: 192001
KNOWLEDGE: K1.02
QID: New

During a time interval in a typical commercial nuclear reactor operating at the beginning of core, 10^3 delayed neutrons were emitted.

Approximately how many prompt neutrons were emitted during this same time interval?

A. 1.5×10^5

B. 6.5×10^6

C. 1.5×10^7

D. 6.5×10^8

ANSWER: A.

PROOF:

Typical delayed neutron fraction ≈ 0.0065
$0.0065/.09935 = 10^3/x$
$993.5 = 0.0065x$
$x = 1.53 \times 10^5$ prompt neutrons

QUESTION: 46
TOPIC: 192002
KNOWLEDGE: K1.07
QID: P445 (B247)

Which one of the following conditions describes a reactor that is exactly critical?

A. $K_{eff} = 0$; $\Delta K/K = 0$

B. $K_{eff} = 0$; $\Delta K/K = 1$

C. $K_{eff} = 1$; $\Delta K/K = 0$

D. $K_{eff} = 1$; $\Delta K/K = 1$

ANSWER: C.

QUESTION: 47
TOPIC: 192002
KNOWLEDGE: K1.09
QID: New (B2747)

A reactor is operating at full power at the beginning of a fuel cycle. A neutron has just been absorbed by a U-238 nucleus at a resonance energy of 6.7 electron volts.

Which one of the following describes the most likely reaction for the newly formed U-239 nucleus and the effect of this reaction on K_{excess}?

A. Decays over several days to Pu-239, which increases K_{excess}.

B. Decays over several days to Pu-240, which increases K_{excess}.

C. Immediately undergoes fast fission, which decreases K_{excess}.

D. Immediately undergoes thermal fission, which decreases K_{excess}.

ANSWER: A.

QUESTION: 48
TOPIC: 192003
KNOWLEDGE: K1.01
QID: P1448 (B1840)

A subcritical reactor has an initial source/startup range count rate of 150 cps with a shutdown reactivity of -2.0% ΔK/K. Approximately how much positive reactivity must be added to establish a stable count rate of 600 cps?

A. 0.5% ΔK/K

B. 1.0% ΔK/K

C. 1.5% ΔK/K

D. 2.0% ΔK/K

ANSWER: C.

PROOF:

$$\rho_1 = \frac{k_{eff\,1} - 1}{k_{eff1}} = -0.02$$

$$k_{eff1} - 1 = -0.02\ k_{eff}$$

$$1.02\ k_{eff1} = 1$$

$$k_{eff1} = 0.98$$

$$\frac{CR_2}{CR_1} = \frac{1 - k_{eff1}}{1 - k_{eff2}}$$

$$\frac{600}{150} = \frac{1 - 0.98}{1 - k_{eff2}}$$

$$1 - k_{eff2} = \frac{0.02}{4} = 0.005$$

$$k_{eff2} = 1 - 0.005 = 0.995$$

$$\Delta\ k_{eff} = k_{eff2} - k_{eff1}$$

$$= 0.995 - 0.98$$

$$\Delta k_{eff} = 0.015 \text{ or } 1.5\%$$

QUESTION: 49
TOPIC: 192003
KNOWLEDGE: K1.07
QID: P1548 (Rev)

Two reactors are identical in every way except that reactor A is at the beginning of core life and reactor B is at the end of core life. Both reactors are critical at 10^{-5}% power.

If the same amount of positive reactivity is added to each reactor at the same time, the point of adding heat will be reached first by reactor _____ because it has a _____ delayed neutron fraction.

A. A; smaller

B. A; larger

C. B; smaller

D. B; larger

ANSWER: C.

QUESTION: 50
TOPIC: 192004
KNOWLEDGE: K1.07
QID: P2352 (Rev)

Refer to the drawing of microscopic cross section for absorption versus neutron energy for a resonance peak in U-238 in a reactor operating at 80% power (see figure below).

If reactor power is increased to 100%, the height of the curve will _____ and the area under the curve will _____.

A. increase; increase

B. increase; remain the same

C. decrease; decrease

D. decrease; remain the same

ANSWER: D

Image Not Available

QUESTION: 51
TOPIC: 192004
KNOWLEDGE: K1.13
QID: P2169 (Rev) (B2470)

Neglecting the effects of core Xe-135, which one of the following power changes requires the greatest amount of positive reactivity addition?

A. 3% power to 10% power

B. 10% power to 25% power

C. 25% power to 60% power

D. 60% power to 100% power

ANSWER: D.

PROOF:

The greatest power change will produce the greatest power defect. Power defect must be overcome with positive reactivity to increase power. Power defect is greatest in option D.

QUESTION: 52
TOPIC: 192004
KNOWLEDGE: K1.10
QID: P1252

Differential boron worth (ΔK/K/ppm) becomes more negative as:

A. burnable poisons deplete.

B. boron concentration increases.

C. moderator temperature increases.

D. fission product poison concentration increases.

ANSWER: A.

QUESTION: 53
TOPIC: 192004
KNOWLEDGE: K1.12
QID: P1753

Given the following initial parameters:

Total power coefficient	= -0.020% ΔK/K/%
Boron worth	= -0.010% ΔK/K/ppm
Rod worth	= -0.025% ΔK/K/inch inserted
Initial reactor coolant system (RCS) boron concentration	= 500 ppm

Which one of the following is the final RCS boron concentration required to support increasing plant power from 30% to 80% by boration/dilution with 10 inches of outward control rod motion? (Assume no change in xenon reactivity.)

A. 425 ppm

B. 450 ppm

C. 550 ppm

D. 575 ppm

ANSWER: A.

PROOF: Δk/k from rods = 10" x (-0.025% Δk/k/in) = +0.25% Δk/k (out)

Δk/k from P.D. = 50 x (-0.020% Δk/k/%) = -1.0% Δk/k (Pwr ↑)

Total Δk/k = Δk/k rods + $\Delta k/k_{PD}$
= +0.25% Δk/k - 1.0% Δk/k = -0.75%Δk/k

Boron change to balance reactivity change from power and rods:

$$\frac{+0.75\%\ \Delta k/k}{-0.010\%\ \Delta k/k/ppm} = -75 \text{ ppm dilution}$$

500 - 75 ppm = 425 ppm

QUESTION: 54
TOPIC: 192005
KNOWLEDGE: K1.07
QID: P2655 (Rev)

The reactor is operating at 85% power with the controlling group of control rods inserted 10%. Which one of the following will cause group differential control rod worth to become more negative? (Assume reactor power and control rod position remain constant for each case.)

A. Fuel temperature increases as fission product gasses accumulate in a fuel rod.

B. RCS average temperature drifts from 580°F to 575°F.

C. Core Xe-135 builds up in the lower half of the core.

D. RCS boron concentration is increased by 5 ppm .

ANSWER: C.

QUESTION: 55
TOPIC: 192005
KNOWLEDGE: K1.03
QID: P1654

A reactor is operating at steady state 50% power at the end of core life when the operator inserts a group of control rods for 5 seconds. Assume turbine load remains constant and the reactor does <u>not</u> scram/trip.

Actual reactor power will stabilize _____ the initial power level and coolant temperature will stabilize _____ the initial temperature.

A. at; at

B. at; below

C. below; at

D. below; below

ANSWER: B.

QUESTION: 56
TOPIC: 192005
KNOWLEDGE: K1.11
QID: P1157

As long as core quadrant power distribution (azimuthal tilt) is maintained within design limits, which one of the following conditions is most likely to exist?

A. Axial power distribution is within design limits.

B. Radial power distribution is within design limits.

C. Nuclear instrumentation is indicating within design accuracy.

D. Departure from nucleate boiling ratio is within design limits.

ANSWER: B.

QUESTION: 57
TOPIC: 192005
KNOWLEDGE: K1.16
QID: P2556 (Rev)

A reactor is operating at steady state full power with all control rods fully withdrawn when one control rod at the core periphery falls completely into the core. Assuming <u>no</u> reactor trip and <u>no</u> operator action, which one of the following will have changed significantly as a result of the dropped rod?

A. Axial power distribution only

B. Axial power distribution and shutdown margin

C. Radial power distribution only

D. Radial power distribution and shutdown margin

ANSWER: C.

QUESTION: 58
TOPIC: 192006
KNOWLEDGE: K1.01
QID: P2058 (Rev) B1558

A fission product poison can be differentiated from all other fission products because a fission product poison:

A. has a higher microscopic cross section for thermal neutron capture.

B. has a longer half-life.

C. is produced in a greater percentage of thermal fissions.

D. is formed as a gas and is contained in the fuel pellets.

ANSWER: A.

QUESTION: 59
TOPIC: 192006
KNOWLEDGE: K1.05
QID: New

Reactors A and B are operating at steady-state 100% power with equilibrium core Xe-135. The reactors are identical except that reactor A is operating near the end of core life and reactor B is operating near the beginning of core life.

Which reactor is experiencing the most negative reactivity from equilibrium core Xe-135?

A. Reactor A due to the greater concentration of equilibrium core Xe-135

B. Reactor A due to the lower competition from the fuel for thermal neutrons

C. Reactor B due to the greater concentration of equilibrium core Xe-135

D. Reactor B due to the lower competition from the fuel for thermal neutrons

ANSWER: B.

PROOF:

Although reactor A has a lower concentration of core Xe-135 than reactor B, its Xe-135 negative reactivity is greater because of a significantly reduced fuel concentration (due to burnup). Therefore, reactor A has significantly reduced competition from the fuel for thermal neutrons.

QUESTION: 60
TOPIC: 192006
KNOWLEDGE: K1.09
QID: P353 (B355)

A plant is being returned to operation following a refueling outage. Fuel preconditioning requires reactor power to be increased from 10% to full power gradually over a one week period.

During this slow power increase, most of the positive reactivity added by the operator is required to overcome the negative reactivity from:

A. fuel burnup.

B. xenon buildup.

C. fuel temperature increase.

D. moderator temperature increase.

ANSWER: B.

QUESTION: 61
TOPIC: 192006
KNOWLEDGE: K1.11
QID: P1462 (B1461)

A reactor has been operating at 100% power for two weeks. Power is then decreased over a one-hour period to 10%.

Assuming manual rod control, which one of the following operator actions is required to maintain a constant reactor coolant temperature at 10% power during the next 24 hours?

A. Add negative reactivity during the entire period

B. Add positive reactivity during the entire period

C. Add positive reactivity, then negative reactivity

D. Add negative reactivity, then positive reactivity

ANSWER: C.

QUESTION: 62
TOPIC: 192006
KNOWLEDGE: K1.12
QID: P63 (Rev) (B1462)

A reactor scram has occurred following two months operation at steady-state 100% power. How soon after the scram will the reactor first be considered xenon-free?

A. 8 to 10 hours

B. 24 to 30 hours

C. 40 to 50 hours

D. 70 to 80 hours

ANSWER: D.

QUESTION: 63
TOPIC: 192006
KNOWLEDGE: K1.14
QID: P2662 (Rev)

A reactor is operating at 100% power immediately following a one-hour power ascension from steady-state 70% power. To keep reactor coolant system temperature stable over the next two hours, the operator must _____ control rods or _____ reactor coolant boron concentration.

A insert; increase

B. insert; decrease

C. withdraw; increase

D. withdraw; decrease

ANSWER: A.

QUESTION: 64
TOPIC: 192007
KNOWLEDGE: K1.04
QID: P464

During a six-month period of continuous full power reactor operation, the reactor coolant boron concentration must be decreased steadily to compensate for:

A. burnable poison burnout and fuel depletion.

B. fuel depletion and buildup of fission product poisons.

C. decreasing control rod worth and burnable poison burnout.

D. buildup of fission product poisons and decreasing control rod worth.

ANSWER: B.

QUESTION: 65
TOPIC: 192008
KNOWLEDGE: K1.03
QID: P2467

A reactor startup is in progress. The reactor is slightly subcritical with a constant startup rate of 0.0 decades per minute (dpm). A short control rod insertion will cause the reactor startup rate indication to rapidly decrease (become negative), and then:

A gradually become less negative and return to 0.0 dpm.

B. gradually become more negative until neutron population reaches equilibrium, then stabilize.

C. stabilize until neutron population reaches the prestartup equilibrium level, then return to 0.0 dpm.

D. stabilize at -1/3 dpm until delayed neutrons are no longer a significant contributor to the neutron population, and then return to 0.0 dpm.

ANSWER: A.

QUESTION: 66
TOPIC: 192008
KNOWLEDGE: K1.07
QID: P765

Which one of the following conditions will result in criticality occurring at a lower than estimated control rod position?

A. Adjusting reactor coolant system boron concentration to 50 ppm lower than assumed for startup calculations

B. A malfunction resulting in control rod speed being lower than normal speed

C. Delaying the time of startup from 10 days to 14 days following a trip from 100% power equilibrium conditions.

D. Misadjusting the steam dump (turbine bypass) controller such that steam pressure is maintained 50 psig higher than the required no-load setting.

ANSWER: A.

QUESTION: 67
TOPIC: 192008
KNOWLEDGE: K1.04
QID: P2367 (B2366)

Refer to the drawing of three 1/M plots (see figure below).

A core reload is in progress with an installed neutron source. During the initial stages of the reload, reactor criticality would be predicted to occur earliest by curve _____, which could possibly be the result of using nuclear instrumentation that is located too _____ the neutron source.

A. A; far from

B. A; close to

C. C; far from

D. C; close to

ANSWER: A.

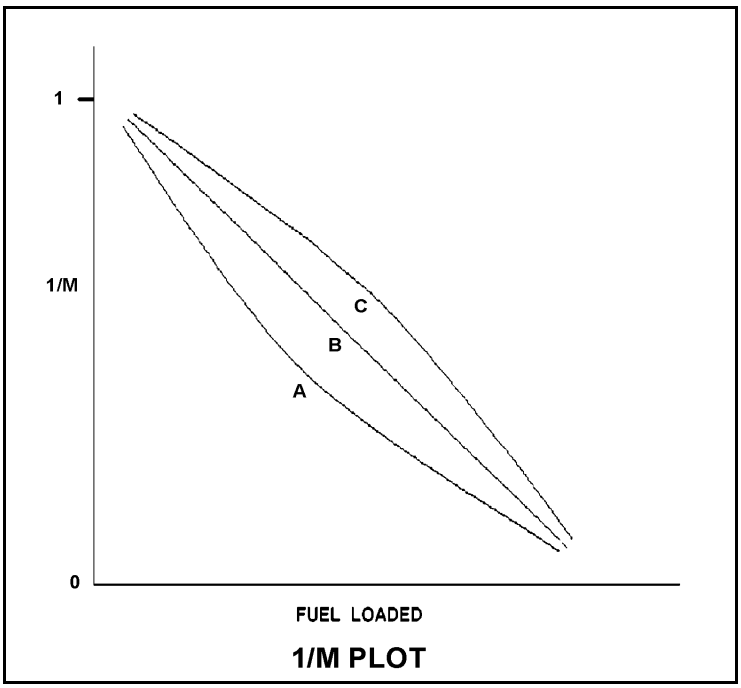

1/M PLOT

QUESTION: 68
TOPIC: 192008
KNOWLEDGE: K1.19
QID: P1672 (Rev)

A refueling outage has just been completed in which the entire core was offloaded and replaced with new fuel. A reactor startup has been performed and power is being increased to 100%.

Which one of the following pairs of reactor fuels will be providing the greatest contribution to core heat production when the reactor reaches 100% power?

A. U-235 and U-238

B. U-238 and Pu-239

C. U-235 and Pu-239

D. U-235 and Pu-241

ANSWER: A.

QUESTION: 69
TOPIC: 192008
KNOWLEDGE: K1.20
QID: P271 (Rev)

A reactor is critical at 3×10^{-8}% power. The operator withdraws rods as necessary to immediately establish and maintain a stable, positive 0.10 DPM startup rate. How long will it take for the reactor to reach 7×10^{-8}% power?

A. 3.7 minutes

B. 5.4 minutes

C. 6.7 minutes

D. 8.4 minutes

ANSWER: A.

PROOF: $P = Po\ 10^{sur(t)}$
$P/Po = 10^{sur(t)}$
$2.3 = 10^{0.1t}$
$0.368 = 0.1t$
$t = 3.7$ minutes

QUESTION: 70
TOPIC: 192008
KNOWLEDGE: K1.21
QID: P1570

A plant is operating at 85% power and 580°F average reactor coolant temperature (T_{ave}) at the end of core life. A failure of the turbine control system opens the turbine control valves to admit 10% more steam flow to the main turbine. No operator actions occur and no protective system actuations occur. Rod control is in manual.

Following the transient, reactor power will stabilize _____ 85% and T_{ave} will stabilize _____ 580°F.

A. above; above

B. above; below

C. below; above

D. below; below

ANSWER: B.

QUESTION: 71
TOPIC: 192008
KNOWLEDGE: K1.23
QID: P2171 (B1770)

Following a reactor trip, reactor power indicates 0.1% when the typical stable post-trip reactor period is observed. Which one of the following is the additional time required for reactor power to decrease to 0.05%?

A. 24 seconds

B. 55 seconds

C. 173 seconds

D. 240 seconds

ANSWER: B.

PROOF:

$$P = P_o e^{t/\tau}$$

$$0.05 = 0.1e^{t/-80}$$

$$0.05/0.1 = e^{-t/-80}$$

$$0.5 = e^{t/-80}$$

$$-0.693 = t/-80$$

$$t = 55 \text{ seconds}$$

QUESTION: 72
TOPIC: 192008
KNOWLEDGE: K1.27
QID: P2572 (Rev)

A reactor has been shutdown for several weeks when a loss of all ac power results in a loss of forced decay heat removal flow.

Given the following information, what will be the average reactor coolant heatup rate during the 20 minutes immediately after decay heat removal flow is lost? Assume that only ambient losses are removing heat from the reactor coolant system (RCS).

Reactor rated thermal power:	2800 MWt
Decay heat rate:	0.2% rated thermal power
RCS ambient heat loss rate:	2.4 MWt
RCS c_p:	1.1 Btu/lbm-°F
RCS inventory (less pressurizer):	325,000 lbm

A. <25°F/hour

B. 26 to 50°F/hour

C. 51 to 75°F/hour

D. >76°F/hour

ANSWER: B.

PROOF:

Net RCS heat addition	=	Decay heat input + RCP heat input - RCS heat loss
	=	[2800 MWt (0.2%) - 2.4 MWt] (3.41 x 10^6 Btu/hr/MWt)
	=	1.1 x 10^7 Btu/hr
Heatup Rate	=	Net RCS heat addition ÷ RCS mass ÷ RCS cp
	=	1.1 x 10^7 ÷ 325,000 ÷ 1.1
	=	30.7°F/hr

QUESTION: 73
TOPIC: 193001
KNOWLEDGE: K1.03
QID: P2574 (Rev)

Refer to the drawing of four differential pressure level detectors (see figure below).

The tanks are identical and are being maintained at 30 psia with a water level of 20 feet. They are surrounded by standard atmospheric pressure. The water temperatures in the tanks and reference legs are the same.

If each detector experiences a ruptured diaphragm, which detector(s) will cause indicated tank level to decrease? (Assume actual tank water level remains constant.)

A. No. 1 only

B. No. 2 only

C. No. 1, 2, and 3

D. No. 2, 3, and 4

ANSWER: D.

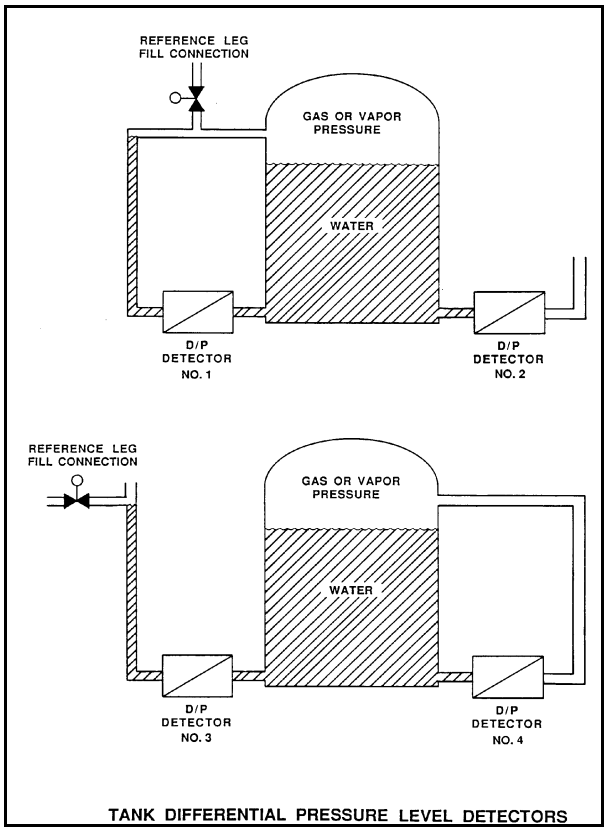

TANK DIFFERENTIAL PRESSURE LEVEL DETECTORS

QUESTION: 74
TOPIC: 193003
KNOWLEDGE: K1.08
QID: P1474 (Rev)

An open container holds a 1 pound-mass of liquid water at saturated conditions under atmospheric pressure. The addition of 4 Btus will:

A. raise the temperature of the water by 4°F.

B. vaporize a portion of the water.

C. increase the density of the water.

D. result in 4°F of superheat.

ANSWER: B.

QUESTION: 75
TOPIC: 193003
KNOWLEDGE: K1.25
QID: New

Given the following:

- The plant is operating near rated power.
- Main turbine inlet steam conditions are 900 psia and 100% quality.
- Ideal steam expansion is occurring in the main turbine.
- Main condenser pressure is 1.0 psia.

Which one of the following is the approximate main condenser specific heat rejection needed to establish condensate depression at 4°F?

A. 716 Btu/lbm

B. 782 Btu/lbm

C. 856 Btu/lbm

D. 1132 Btu/lbm

ANSWER: A.

PROOF:

Condenser heat rejection = Exhaust steam enthalpy - condensate enthalpy

1) Use Mollier chart to determine that steam starting at 900 psia/100% quality if expanded ideally through a turbine to a condenser at 1.0 psia will have an exit energy of about 782 Btu/lbm.
2) The enthalpy of saturated water at 1.0 psia is about 70 Btu/lbm.
3) Condenser heat rejection to turn exhaust steam into saturated water = 712 Btu/lbm (782 - 70).
4) A condensate depression of 4°F requires saturated fluid to be cooled 4°F below Tsat, which, per the definition of specific heat, requires an additional 4 Btu/lbm of condenser heat rejection.
5) Total condenser heat rejection = 716 Btu/lbm (712 + 4).

QUESTION: 76
TOPIC: 193004
KNOWLEDGE: K1.15
QID: P2402 (Rev)

Refer to the drawing of two 1,000 ft^3 pressure vessels with relief protection (see figure below).

Both vessels are in saturated conditions at 281°F and approximately 35 psig. Vessel A is completely filled with saturated water. Vessel B contains one-half saturated steam (100% quality) volume and one-half saturated water (0% quality) volume. Both vessels are protected by identical relief valves.

If both relief valves begin to leak at a rate of 0.1% of design flow, the higher temperature fluid will be leaving the relief valve for vessel _____. And, if 50 lbm of fluid is released through both relief valves, the larger pressure decrease will occur in vessel _____.

A. A; A

B. A; B

C. B; A

D. B; B

ANSWER: D.

PROOF:

Using the Mollier Diagram, throttling via the relief valves will result in a vessel A relief valve outlet temperature of ~ 212°F and a vessel B relief valve outlet temperature of ~ 260°F.

Releasing 50 lbm will result in the largest pressure decrease in vessel B because there is less total energy in vessel B (due to being only half full of saturated water) to limit the decrease in pressure.

QUESTION: 77
TOPIC: 193004
KNOWLEDGE: K1.11
QID: P2576 (B2576)

A plant is operating at 80% power with 5°F of condensate depression in the main condenser. If the condensate depression decreases to 2°F, plant efficiency will _____ and the probability of condensate pump cavitation will _____.

A. increase; increase

B. increase; decrease

C. decrease; increase

D. decrease; decrease

ANSWER: A.

QUESTION: 78
TOPIC: 193005
KNOWLEDGE: K1.03
QID: New

Which one of the following is the reason that steam cycle efficiency improves when moisture separator/reheaters are placed in service between the high-pressure and low-pressure stages of a main turbine?

A. Results in less heat rejection from the main condenser for the same low-pressure turbine exhaust steam conditions.

B. Results in an increased mass flow rate of steam through the low-pressure turbine for the same reactor power.

C. Results in a greater fractional increase in main turbine work output than in main condenser heat rejection for the same high-pressure turbine inlet steam conditions.

D. Results in heat rejection occurring at a lower pressure in the main condenser for the same cooling water flow rate and high-pressure turbine inlet steam conditions.

ANSWER: C.

QUESTION: 79
TOPIC: 193006
KNOWLEDGE: K1.05
QID: P1679

A 100 gpm leak to atmosphere has developed from a cooling water system that is operating at 60 psig. Which one of the following is the expected leak rate when system pressure has decreased to 20 psig?

A. 33.3 gpm

B. 53.0 gpm

C. 57.7 gpm

D. 70.7 gpm

ANSWER: C.

PROOF:

From the Pump Laws,

$$F \propto \sqrt{\Delta P}$$

$$\frac{F_1}{F_2} = \sqrt{\frac{\Delta P_1}{\Delta P_2}}$$

$$F_2 = \frac{100}{\left(\frac{60}{20}\right)^{1/2}} = \frac{100}{(3)^{1/2}} = \frac{100}{1.732}$$

$$F_2 = 57.74 \text{ gpm}$$

QUESTION: 80
TOPIC: 193006
KNOWLEDGE: K1.10
QID: P2480 (Rev) (B1135)

The primary reason for slowly opening the discharge valves of large motor-driven centrifugal cooling water pumps after starting the pumps is to minimize the:

A. net positive suction head requirements.

B. potential for a water hammer.

C. motor running current requirements.

D. potential for pump cavitation.

ANSWER: B.

QUESTION: 81
TOPIC: 193006
KNOWLEDGE: K1.11
QID: P2181 (Rev)

Refer to the drawing of a cooling water system in which both pumps A and B are operating and the pump discharge valve is currently 50% open (see figure below).

Which one of the following will cause pump A to operate closer to the conditions that will cause cavitation?

A. Stopping pump B

B. Positioning the discharge valve to 40% open

C. Raising the water level in the surge tank by 2 feet

D. Decreasing heat exchanger service water flow rate by 10%

ANSWER: D.

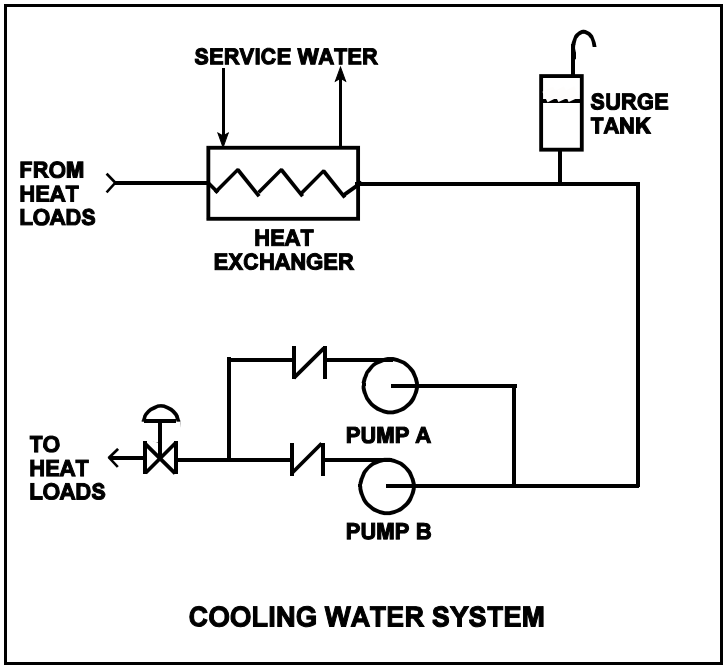

QUESTION: 82
TOPIC: 193006
KNOWLEDGE: K1.12
QID: P1083 (Rev)

A steam generator transient causes main steam pressure to increase although the actual steam mass flow rate to the main turbine remains constant. If the main steam flow instrument is <u>not</u> density compensated, the increased main steam pressure will cause indicated steam mass flow rate to:

A. increase due to the velocity increase of the steam.

B. increase due to the increased density of the steam.

C. decrease due to the velocity decrease of the steam.

D. decrease due to the decreased density of the steam.

ANSWER: C.

QUESTION: 83
TOPIC: 193006
KNOWLEDGE: K1.15
QID: P2481 (B2479)

Water at 90°F and 50 psig is flowing through a 10-inch diameter pipe at 100 lbm/sec. The pipe then splits into two pipes, a 3-inch diameter pipe and a 6-inch diameter pipe. Disregarding any flow restrictions other than pipe size, which one of the following lists the approximate flow rates through the 3-inch and 6-inch diameter pipes? (Assume fluid velocity is the same in each pipe.)

	3-inch Pipe (lbm/sec)	6-inch Pipe (lbm/sec)
A.	10	90
B.	20	80
C.	25	75
D.	33	67

ANSWER: B.

PROOF:

$m = \rho A v$
ρ and v are the same for all conditons
Therefore, $m \propto A$

$m_3/m_{3+6} = A_3/A_{3+6}$
$m_3 = (m_{3+6})(A_3)/A_{3+6}$
$= 100\ (2.25\pi)/(2.25\pi + 9\pi)$
$= 225/11.25$
$= 20$
$m_6/m_{3+6} = A_6/A_{3+6}$
$m_6 = (m_{3+6})(A_6)/A_{3+6}$
$= 100\ (9\pi)/(2.25\pi + 9\pi)$
$= 900/11.25$
$= 80$

QUESTION: 84
TOPIC: 193007
KNOWLEDGE: K1.01
QID: P2284 (Rev)

Which one of the following describes a heat transfer process in which conduction is the most significant heat transfer mechanism?

A. From the reactor fuel to the core barrel during core uncovery

B. From the main turbine exhaust steam to the atmosphere via main condenser cooling water and a cooling tower during normal operation

C. From the reactor fuel to the steam outlet of the steam generators during a station blackout

D. From a fuel pellet to the fuel clad via the fuel rod fill gas during normal operation

ANSWER: D.

QUESTION: 85
TOPIC: 193007
KNOWLEDGE: K1.06
QID: P2485 (Rev) (B2484)

The power range nuclear instruments have been adjusted to 100% based on a calculated heat balance. Which one of the following will result in indicated reactor power being <u>lower</u> than actual reactor power?

A. The feed water temperature used in the heat balance calculation was 20°F lower than actual feed water temperature.

B. The reactor coolant pump heat input term was omitted from the heat balance calculation.

C. The ambient heat loss value used in the heat balance calculation was only half the actual ambient heat loss.

D. The feed water flow rates used in the heat balance calculation were 10% higher than actual flow rates.

ANSWER: C.

QUESTION: 86
TOPIC: 193008
KNOWLEDGE: K1.02
QID: P2386

Subcooled water enters the bottom of an operating reactor core that is experiencing a significant overpower transient. As the water flows upward past the fuel assembies, boiling occurs at the surface of a few fuel assemblies.

If the coolant had remained subcooled, average fuel temperature would have been _____ because single-phase convection is a _____ efficient method of heat transfer than boiling.

A. higher; more

B. higher; less

C. lower; more

D. lower; less

ANSWER: B.

QUESTION: 87
TOPIC: 193008
KNOWLEDGE: K1.03
QID: P146 (Rev)

Under constant pressure conditions, when compared to subcooled nucleate boiling, saturated nucleate boiling (bulk boiling):

A. provides a greater margin to critical heat flux.

B. is more likely to occur under normal operating conditions at 100% power.

C. results in a lower heated surface temperature for the same heat flux.

D. requires more Btu/lbm to convert water to steam at a given temperature.

ANSWER: C.

QUESTION: 88
TOPIC: 193008
KNOWLEDGE: K1.08
QID: P2189 (B687)

Which one of the following describes the relative contributions of the convective and radiative heat transfer mechanisms, and the relationship of ΔT (T_{wall} - T_{bulk}) to heat flux, during stable film boiling heat transfer in the core?

A. Only the radiative heat transfer mechanism is significant and ΔT increases exponentially with heat flux.

B. Only the radiative heat transfer mechanism is significant and ΔT increases in direct proportion to heat flux.

C. Both heat transfer mechanisms are significant and ΔT increases exponentially with heat flux.

D. Both heat transfer mechanisms are significant and ΔT increases in direct proportion to heat flux.

ANSWER: A.

QUESTION: 89
TOPIC: 193008
KNOWLEDGE: K1.10
QID: P990

A reactor is operating at 100% steady-state power at the end of core life with all control rods fully withdrawn. At what axial location in a typical fuel assembly will the <u>minimum</u> departure from nucleate boiling ratio occur?

A. At the bottom of the fuel assembly

B. At the top of the fuel assembly

C. Between the bottom and the midplane of the fuel assembly

D. Between the midplane and the top of the fuel assembly

ANSWER: D.

QUESTION: 90
TOPIC: 193008
KNOWLEDGE: K1.15
QID: New

A nuclear plant maintains reactor coolant system (RCS) loop cold leg temperature (T_{cold}) at 557°F from 0% to 100% power. At 100% power, the RCS loop differential temperature (T_{hot} - T_{cold}) is 60°F.

If this plant also maintains RCS pressure constant at 2235 psig, which one of the following is the RCS subcooling margin at 50% power?

A. 30°F

B. 36°F

C. 66°F

D. 96°F

ANSWER: C.

PROOF:

Using $Q = mc_p\Delta T$ (from the equation sheet), at 50% ΔT = 30°F and T_{hot} = 587°F

At 2235 psig (2250 psia) T_{sat} = 653°F

Therefore, minimum SCM = T_{sat} - T_{hot} = 653°F - 587°F = 66°F

QUESTION: 91
TOPIC: 193008
KNOWLEDGE: K1.18
QID: P1790 (B1789)

Single-phase coolant flow resistance (head loss) in a reactor core is proportional to coolant _____ and inversely proportional to _____.

A. temperature; coolant channel cross-sectional area

B. temperature; fuel assembly length

C. velocity; coolant channel cross-sectional area

D. velocity; fuel assembly length

ANSWER: C.

QUESTION: 92
TOPIC: 193008
KNOWLEDGE: K1.23
QID: P1985

A reactor had been operating at a constant power level for the last two weeks when a loss of all ac power occurred, thereby causing a reactor trip and a loss of forced reactor coolant flow. Natural circulation reactor coolant flow developed and stabilized 30 minutes after the trip.

Which one of the following combinations of initial reactor power and post-trip steam generator pressure will result in the lowest stable natural circulation flow rate 30 minutes after the trip? (Assume constant steam generator water levels.)

	INITIAL REACTOR POWER	POST-TRIP STEAM GENERATOR PRESSURE
A.	100%	1100 psia
B.	25%	1100 psia
C.	100%	1000 psia
D.	25%	1000 psia

ANSWER: B.

QUESTION: 93
TOPIC: 193008
KNOWLEDGE: K1.21
QID: P1692

A reactor is shut down with natural circulation core cooling. Decay heat generation is equivalent to 1.0% rated thermal power. Core ΔT has stabilized at 16°F.

When decay heat generation decreases to 0.5% rated thermal power, core ΔT will be approximately:

A. 2°F.

B. 4°F.

C. 8°F.

D. 10°F.

ANSWER: D.

PROOF:

$$\Delta T^{1/2} \propto \dot{Q}^{1/3}$$

$$\Delta T \propto \dot{Q}^{2/3}$$

$$\frac{\Delta T_1}{\Delta T_2} = \left(\frac{\dot{Q}_1}{\dot{Q}_2}\right)^{2/3}$$

$$\Delta T_2 = \frac{\Delta T_1}{(\dot{Q}_1/\dot{Q}_2)^{2/3}}$$

$$\Delta T_2 = \frac{16}{(1/.5)^{2/3}}$$

$$\Delta T_2 = \frac{16}{1.587}$$

$$\Delta T_2 = 10.1°F$$

QUESTION: 94
TOPIC: 193009
KNOWLEDGE: K1.02
QID: P1195 (Rev)

A reactor is operating steady-state at 80% power at the beginning of a fuel cycle. All control rods are fully withdrawn and in manual control. Moderator temperature coefficient is negative.

Which one of the following will increase the axial peaking factor? (Assume no subsequent operator action is taken and that turbine load and core xenon distribution do not change unless stated.)

A. One bank of control rods is inserted 10%.

B. Power is maintained constant for one month.

C. Turbine load/reactor power is reduced by 20%.

D. Reactor coolant system boron concentration is increased by 50 ppm.

ANSWER: A.

QUESTION: 95
TOPIC: 193009
KNOWLEDGE: K1.05
QID: P1395 (B1893)

Thermal limits are established to protect the reactor core and thereby protect the public during plant operations which include:

A. normal operations only.

B. normal and abnormal operations only.

C. normal, abnormal, and postulated accident operations only.

D. normal, abnormal, postulated and unpostulated accident operations.

ANSWER: C.

QUESTION: 96
TOPIC: 193010
KNOWLEDGE: K1.01
QID: P2497 (Rev)

Which one of the following comparisons will result in a lower probability of brittle fracture failure of the reactor vessel?

A. An RCS pH of 9.0 rather than 8.5

B. A low reactor coolant oxygen content rather than a high oxygen content

C. A 50°F/hr RCS cooldown rather than a 100°F/hr heatup

D. A high gamma flux rather than a high neutron flux

ANSWER: D.

QUESTION: 97
TOPIC: 193010
KNOWLEDGE: K1.02
QID: P597 (B2699)

The nil-ductility transition temperature of the reactor vessel (RV) is the temperature:

A. below which the RV metal will elastically deform as reactor coolant system (RCS) pressure decreases.

B. below which the RV metal loses its ability to elastically deform as RCS pressure increases.

C. above which the RV metal loses its ability to elastically deform as RCS pressure increases.

D. above which the RV metal will elastically deform as RCS pressure decreases.

ANSWER: B.

QUESTION: 98
TOPIC: 193010
KNOWLEDGE: K1.05
QID: P899 (B1900)

After several years of operation, the maximum allowable stress to the reactor vessel is more limited by the inner wall than the outer wall because:

A. there is a temperature gradient across the reactor pressure vessel wall.

B. the inner wall has a smaller surface area than the outer wall.

C. the inner wall experiences more neutron-induced embrittlement than the outer wall.

D. the inner wall experiences more tensile stress than the outer wall.

ANSWER: C.

QUESTION: 99
TOPIC: 193010
KNOWLEDGE: K1.05
QID: P2599 (B2600)

Two identical reactors are currently shut down for refueling. Reactor A has an average lifetime power capacity of 60% and has been operating for 15 years. Reactor B has an average lifetime power capacity of 75% and has been operating for 12 years.

Which reactor, if any, will have the lowest reactor vessel nil ductility transition temperature?

A. Reactor A due to the lower average power capacity

B. Reactor B due to the higher average power capacity

C. Both reactors will have approximately the same nil ductility transition temperature because each core has produced approximately the same number of fissions.

D. Both reactors will have approximately the same nil ductility transition temperature because fast neutron irradiation from a shut down core is not significant.

ANSWER: C.

QUESTION: 100
TOPIC: 193010
KNOWLEDGE: K1.07
QID: P1000

An uncontrolled cooldown is a brittle fracture concern because it creates a large _____ stress at the _____ wall of the reactor vessel.

A. tensile; inner

B. tensile; outer

C. compressive; inner

D. compressive; outer

ANSWER: A.