rec'd with letter dtd 12/30/92

YUCCA MOUNTAIN PROJECT

T-AD-088
12/89

CONTROLLED
NO. 1
THIS IS A RED STAMP
COPY

Study Plan Number 8.3.4.2.4.3

Study Plan Title Characterization of the Geomechanical Attributes of the Waste Package Environment

Revision Number 0

Prepared by:

Date:

12/11/92
Director, Regulatory and Site Evaluation Division / Date

12/11/92
Director, Quality Assurance Division / Date

102.8

9301060040 921224
PDR WASTE
WM-11 PDR

Study Plan for
Study 8.3.4.2.4.3

STUDY PLAN FOR CHARACTERIZATION OF THE GEOMECHANICAL ATTRIBUTES OF THE WASTE PACKAGE ENVIRONMENT

Revision 0

August 1992

U.S. Department of Energy
Office of Civilian Radioactive Waste Management
Washington, DC 20585

Prepared by
Lawrence Livermore National Laboratory

Contents

Page Rev. IRN

ACRONYMS AND ABBREVIATIONS v
GLOSSARY vii
ABSTRACT ix

1.0 PURPOSE AND OBJECTIVES OF STUDY 1-1
1.1 Information to Be Obtained and How That Information Will Be Used 1-1
1.2 Rationale and Justification for Information to Be Obtained .. 1-2
1.2.1 Design and Performance Issues 1-2
1.2.2 Regulatory Issues 1-9
1.2.3 Relationship to Other Studies 1-9
1.3 Waste Package Environment 1-11
1.4 Future Studies 1-16

2.0 RATIONALE FOR SELECTED STUDY 2-1
2.1 Rationale for Activities 2-2
2.1.1 Rationale for Block Stability Analysis 2-3
2.1.2 Rationale for Borehole Damage Analysis 2-8
2.1.3 Rationale for Geomechanical Properties Analysis 2-14
2.2 Rationale for Selected Number, Location, Duration, and Timing of Experiments 2-16
2.2.1 Number 2-16
2.2.2 Location 2-21
2.2.3 Duration and Timing 2-21
2.3 Constraints: Factors Affecting Selection of Experimental Methods and Analytical Approaches 2-23
2.3.1 Potential Impacts on the Site 2-23
2.3.2 Simulation of Repository Conditions 2-23
2.3.3 Required Accuracy and Precision of Parameters 2-23
2.3.4 Capabilities and Limitations of Analytical Methods . 2-24
2.3.5 Time Constraints 2-26
2.3.6 Scale and Applicability 2-26
2.3.7 Interference With Other Experiments 2-27
2.3.8 Interference With Exploratory Studies Facility 2-27

3.0 DESCRIPTIONS OF EXPERIMENTS AND ANALYSES 3-1
3.1 Block Stability Analysis 3-1
3.1.1 Approach 3-1
3.1.2 Methods 3-1
3.1.3 Technical Procedures 3-6

Contents (continued)

Page Rev. IRN

3.1.4 Equipment 3-7
3.1.5 Representativeness 3-7
3.1.6 Range of Expected Results 3-8
3.1.7 Techniques of Data Reduction and Analysis 3-9
3.2 Borehole Damage Analysis 3-10
3.2.1 Approach 3-10
3.2.2 Methods 3-15
3.2.3 Technical Procedures 3-25
3.2.4 Equipment 3-26
3.2.5 Representativeness 3-27
3.2.6 Range of Expected Results 3-30
3.2.7 Techniques of Data Reduction and Analysis 3-31
3.3 Geomechanical Properties Analysis 3-32
3.3.1 Approach 3-32
3.3.2 Methods 3-32
3.3.3 Technical Procedures 3-34
3.3.4 Equipment 3-34
3.3.5 Representativeness 3-35
3.3.6 Range of Expected Results 3-36
3.3.7 Techniques of Data Reduction and Analysis 3-36

4.0 APPLICATION OF RESULTS 4-1

5.0 SCHEDULE AND MILESTONES 5-1
5.1 Block Stability Analysis 5-1
5.2 Borehole Damage Analysis 5-3
5.3 Geomechanical Properties Analysis 5-3

6.0 ACKNOWLEDGMENTS 6-1

7.0 REFERENCES 7-1

List of Figures

1-1 Model hierarchy for Issue 1.10 (Waste Package Characteristics —Postclosure). Reproduced from *Site Characterization Plan* (DOE, 1988a) 1-4
1-2 Relation of activities described in this study plan to characterization of the WP environment 1-10
1-3 In the reference configuration, the waste container is emplaced in a vertical borehole with an air gap between the waste

Contents (continued)

Page Rev. IRN

List of Figures (continued)

container and the wall of the borehole. The near field extends beyond the emplacement borehole. Adapted from the *Yucca Mountain Site Characterization Project Waste Package Plan* (Harrison-Giesler et al., 1991) 1-12
1-4 Release of radionuclides to the NFE through water path (A) to (B) 1-15
2-1 Map of drilling sites for the systematic drilling program 2-22
3-1 Schematic of a hollow cylinder experiment. Adapted from Ewy and Cook (1990a) 3-18
3-2 Schematic of image production methodology 3-20
3-3 Schematic of a true triaxial block experiment 3-21
3-4 A schematic representation of the double torsion test device. (a) The test sample. (b) Side view of sample and loading apparatus (P = loading). (c) End view of the loaded sample 3-23
3-5 Sample geometry of a short rod sample. (a) Side view of cylindrical sample; a_0 = initial crack length (notch depth) measured from line of load application; a_1 = distance from chevron; w = sample width. (b) Cross-section of sample with the chevron load line to end of notch; β = chevron half-angle (approx. 27). (c) Top view of sample; D = diameter of sample and w/D = 1.5. Adapted from Sun and Ouchterlony (1986) 3-24
5-1 Schedule of activities 5-2

List of Tables

1-1 Model hierarchy and model inputs resulting from and used by this study for Issue 1.10 1-5
1-2 "Rock-induced load on the waste package" is a design goal (performance measure) for Issue 1.10 and a performance parameter for Issues 1.4 and 1.5 1-7
1-3 Principal input parameters resulting from this study for Issues 1.4 and 1.5 1-9
2-1 Number of experiments planned for initial parametric studies.. 2-17
2-2 Rationale for temperature ranges to be used in experiments 2-19
2-3 Values of α and γ corresponding to confidence levels defined by issues 2-20
2-4 Summary of accuracy and precision required for selected experimental parameters 2-25
3-1 Fracture properties experiments 3-5
3-2 Borehole damage experiments 3-13
3-3 Uniaxial and triaxial experiments 3-35
4-1 Application of results 4-2

Acronyms and Abbreviations

ASTM	American Society for Testing and Materials
CFR	Code of Federal Regulations
DOE	Department of Energy
EBS	engineered barrier system
EBSFT	engineered barrier system field tests
ESF	Exploratory Studies Facility
FEM	Finite Element Method
HLW	high-level waste
IN	Information Need
ISP	Individual Software Plan
ISRM	International Society for Rock Mechanics
JCS	joint compressive strength
JRC	joint roughness coefficient
LLNL	Lawrence Livermore National Laboratory
LVDT	linear variable displacement transducer
MGDS	Mined Geologic Disposal System
NFE	near-field environment
NRC	National Research Council
NRC	Nuclear Regulatory Commission
NTS	Nevada Test Site
NWPA	Nuclear Waste Policy Act
OCRWM	Office of Civilian Radioactive Waste Management
ONWI	Office of Nuclear Waste Isolation
QA	quality assurance
SCP	Site Characterization Plan
SEM	scanning electron microscopy
SFT—C	Spent Fuel Test—Climax
SP	study plan
TIP	Technical Implementing Procedure
TSw2	Topopah Spring Member of the Paintbrush Tuff
WP	waste package
YMP	Yucca Mountain Project
YMPO	Yucca Mountain Site Characterization Project Office

Glossary

Engineered barrier system

The engineered barrier system (EBS) is defined by the NRC rule 10 CFR 60-2 as "the waste packages and the underground facility" (NRC, 1988). The latter means the underground structure, including openings and backfill materials, but excluding shafts, boreholes, and their seals. The Nuclear Waste Policy Act (NWPA, 1983) defines the EBS as the "manmade components of a disposal system designed to prevent the release of radionuclides into the geologic medium involved. Such a term includes the high-level radioactive waste form, high-level radioactive waste canisters, and other materials placed over and around such containers." The 10 CFR 60-2 definition is used by the WP Program with the interpretation that the excluded "boreholes" refers only to the exploratory boreholes from the surface-based testing program. The boundary of the EBS used in this plan coincides with the surfaces of the underground repository drifts and emplacement boreholes (DOE, 1988a).

Near-field environment

The near-field environment is also known as the "waste-package environment" and the "disturbed zone." The precise shape of the near-field boundary depends on the specific processes or attributes (such as stress, temperature, or hydrologic conditions) requiring characterization and the time elapsed since waste emplacement. For example, stress fields that are induced into the geologic media from emplaced waste forms and that require characterization, will extend radially only a few borehole radii from the borehole wall and only slightly above and below the waste container. In contrast, the hydrologic boundary for saturation that requires characterization may extend up to tens of meters radially, as well as above and below the emplaced waste containers, for the first several hundred years after waste emplacement. In general, the near-field environment that will require site-specific characterization will include major portions of the geologic media that lie between emplaced waste containers, between emplacement drifts, as well as above and below the containers and drifts.

Glossary (continued)

Waste package The waste package (WP) is the "primary container that holds, and is in contact with, solidified high-level radioactive waste, spent nuclear fuel, or other radioactive materials, and any overpacks that are emplaced at a repository" (NWPA, 1983). For the purposes of the WP Program, this definition has been extended to include the "waste form and any containers, shielding, packing, and other absorbent materials immediately surrounding an individual waste container" (NRC, 1988; DOE, 1988a).

STUDY PLAN FOR CHARACTERIZATION OF THE GEOMECHANICAL ATTRIBUTES OF THE WASTE PACKAGE ENVIRONMENT

Stephen C. Blair

Abstract

The Yucca Mountain Site Characterization Project Office of the Department of Energy's Office of Civilian Radioactive Waste Management Program is conducting a broad range of studies to determine the suitability of Yucca Mountain, Nevada as the site for a nuclear-waste repository. As part of this effort, Lawrence Livermore National Laboratory is developing the design concepts for the waste package and the engineered barrier system that will be incorporated into the potential repository. The design and performance of the waste package and the engineered barrier system are dependent on the geomechanical, hydrologic, and geochemical conditions over time in the rock forming the near-field environment.

The purpose of this study is to characterize the geomechanical response of the rock in the near field to the changing conditions expected to occur over the lifetime of the repository. This study plan presents the rationale and justification for the study as prescribed by design and performance issues and other regulatory issues; the rationale and general methodology for the planned activities; and a discussion of the relationship of this study to other Yucca Mountain Site Characterization Project Office studies.

1.0 Purpose and Objectives of Study

1.1 Information to Be Obtained and How That Information Will Be Used

The Yucca Mountain Site Characterization Project Office (YMPO) of the Department of Energy's (DOE) Office of Civilian Radioactive Waste Management Program (OCRWM) is conducting a broad range of studies to determine the suitability of Yucca Mountain, Nevada as the site for a nuclear-waste repository. The site is located about 120 km northwest of Las Vegas in an area of uninhabited desert. The potential repository would be sited at depths of 200–400 m in a densely welded and devitrified horizon of the Topopah Spring Member of the Paintbrush Tuff (TSw2). Lawrence Livermore National Laboratory (LLNL), as a Project Participant, is responsible for developing the design concepts for the waste package (WP) and the engineered barrier system (EBS). This responsibility includes materials testing and selection, design criteria development, waste-form characterization,. performance assessments, and near-field environment (NFE) characterization. These areas of responsibility are interrelated and to a large extent depend on the environmental conditions surrounding the EBS components.

The purpose of this study is to characterize the geomechanical (thermal and mechanical) response of the rock in the NFE to the changing environmental conditions expected to occur over the lifetime of the repository. The activities described in this study plan were developed based on the reference repository design as documented in the *Site Characterization Plan* (*SCP*) (DOE, 1988a). The reference design calls for each WP to be emplaced in a borehole, with an air gap between the WP and the borehole wall (the WP design is discussed in more detail in Sec. 1.3). In addition, alternative designs for WP emplacement (e.g., drift emplacement, use of borehole liners, and grouting of the repository formation) in the potential repository have been proposed. We anticipate that this study plan will be revised as necessary to address future changes in WP design.

We have planned activities that will contribute to a fundamental understanding of the time-dependent geomechanical response of the rock in the NFE and that will provide information necessary for characterization of the geomechanical response of the NFE for a wide range of subsurface

repository configurations. Results from these studies, along with results from other related studies, will enable us to estimate changes in the geomechanical properties of the rock near the WPs. Because the reference design includes the emplacement of waste in boreholes, this study will investigate the stability of the borehole and the possibility of borehole wall failure. Determining the possibility of failure of the borehole wall is necessary because failure could result in rock-induced loading of the WP container, which could affect the container's mechanical integrity. In addition, failure of the wall could result in the creation of transport pathways for the release of radionuclides into the environment.

The information we obtain from these activities will be used to address WP design and performance issues and assess postclosure performance as defined in *SCP* Sec. 8.3.4. Regulatory issues directly related to the evaluation of site suitability, as stated in 10 CFR 960 of the *Code of Federal Regulations* (DOE, 1988b), also will be addressed.

1.2 Rationale and Justification for Information to Be Obtained

1.2.1 Design and Performance Issues

The *Site Characterization Plan (SCP)* is based on the YMPO Issues Hierarchy, which is a three-tiered framework consisting of key issues, issues, and information needs. The Issues Hierarchy states the questions that the DOE feels must be resolved about the performance of the mined, geologic disposal system (i.e., the WP, the engineered repository, and the natural system of the site) to demonstrate compliance with the applicable Federal regulations.

The issues are of two types: (1) performance issues that generally address questions about compliance with regulatory requirements for the performance of the disposal system, and (2) design issues that address questions about the design of the repository, the shafts, borehole seals, and the WPs. To resolve the issues, technical information must be gathered as defined under the issues' information needs. More detail on the derivation, structure, and scope of the issues hierarchy is presented in *SCP* Sec. 8.1.1.

This study plan (8.3.4.2.4.3) will provide a portion of the information necessary to resolve Design Issue 1.10 and Performance Issues 1.4 and 1.5 (Fig. 1-1). These issues are briefly described in the following paragraphs. The

issues and information needs that pertain to the WP (defined under Key Issue 1, Postclosure Performance, *SCP* Sec. 8.1.1) are based on the requirements described in the U.S. Nuclear Regulatory Commission's (NRC) 10 CFR Part 60 with consideration of the Nuclear Waste Policy Act of 1982, the U.S. Environmental Protection Agency's 40 CFR Part 191, the U.S. Department of Energy's 10 CFR 960, and the Generic Requirements for the Mined Geologic Disposal System (MGDS). Preclosure issues such as waste retrievability (Design Issue 2.4) are not discussed in this study plan. The approach for the study of waste retrievability is presented in *SCP* Sec. 8.3.5.2.

Design Issue 1.10. Have the characteristics and configurations of the waste packages been adequately established to (a) show compliance with the postclosure design criteria of 10 CFR 60.135 and (b) provide information to support resolution of the performance issues? Issue 1.10 is concerned with the characteristics and configurations of the WP, including the postclosure WP environment. The resolution strategy (*SCP* Sec. 8.3.4.2) is to produce a description of WP and near-field interactions (Information Need 1.10.1) that addresses factors identified in 10 CFR 60.135, and incorporate these interactions into WP design considerations. *SCP* Table 8.3.4.2-1 lists the model hierarchy and model inputs for Issue 1.10; Table 1-1 shows the models and model inputs resulting from and used by this study plan and Fig. 1-1 shows the relationship of these models and model inputs to resolution of Issue 1.10.

To develop a description of the postemplacement NFE and satisfy Information Need 1.10.4 under Issue 1.10, it is necessary to identify anticipated physical interactions between the as-assembled WP and the environment that may affect the integrity of the waste container. These physical interactions are defined in the *SCP* as performance measures that represent design goals. This study will address the design goal (performance measure) "rock-induced load on the waste package" under Issue 1.10, which also is a performance parameter under Issues 1.4 and 1.5 (Table 1-2), by providing information on both impact and static rock-induced loads on the WP. The information on impact and static rock-induced loading will be used in specific design models for the mechanical loading of the WP (Issue 1.10). The information on static loads also will be used in specific corrosion models for the WP (Issue 1.4) and in transport models for radionuclide release (Issue 1.5). For all requirements to be met with one study plan, this information will be gathered for Issue 1.10,

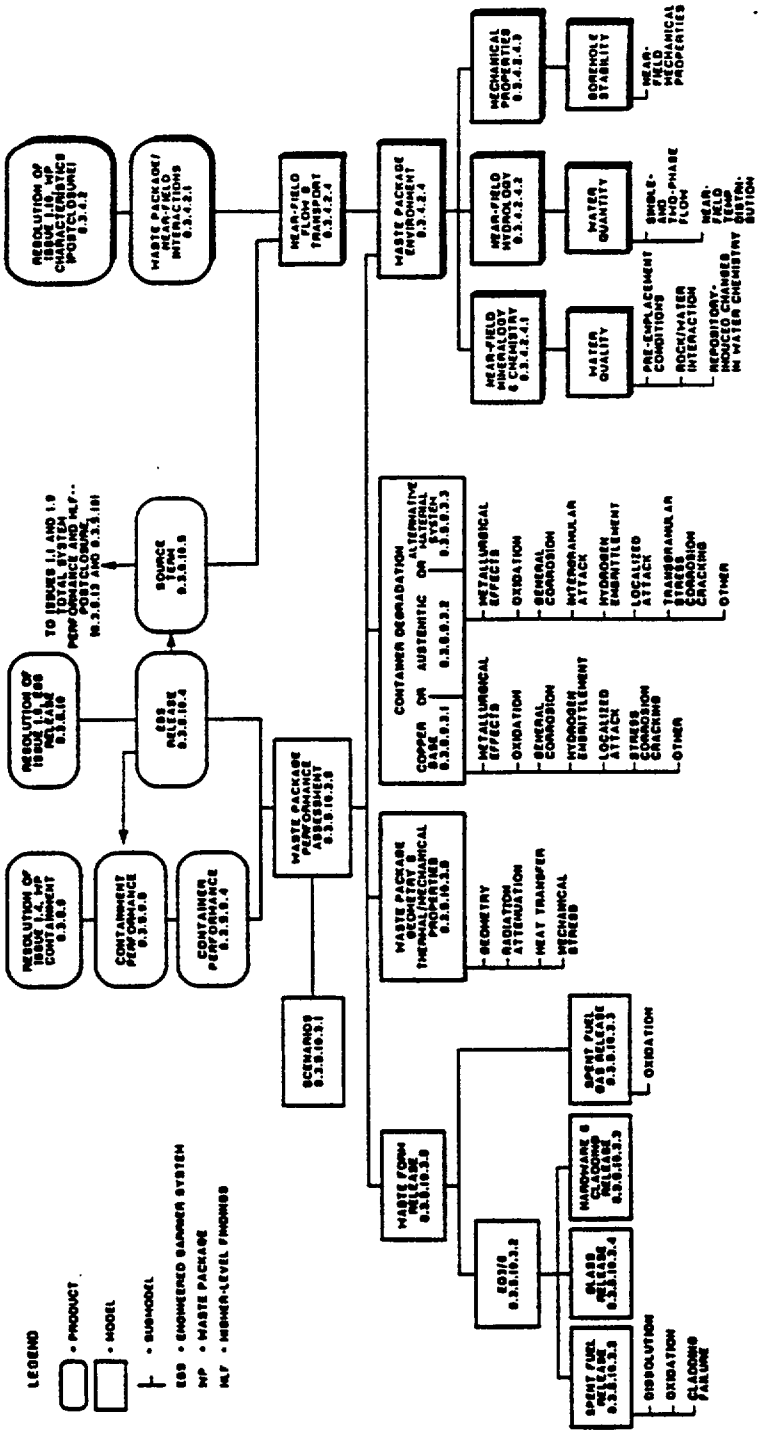

Figure 1-1. Model hierarchy for Issue 1.10 (Waste Package Characteristics—Postclosure). Reproduced from *Site Characterization Plan* (DOE, 1988a).

Table 1-1. Model hierarchy and model inputs resulting from and used by this study for Issue 1.10.

Model	Model input	Needed confidence	*SCP* section	Study plans providing input
Waste package environment	Thermal and mechanical properties of the postemplacement waste package environment [includes rock thermal and mechanical properties, (e.g., thermal capacitance, compressive and tensile strengths, and the effect of radiation)]	High	8.3.4.2.4.3	8.3.1.15.1.1 8.3.1.15.1.2 8.3.1.15.1.3
Thermal and mechanical properties	Thermal loading	High	8.3.4.2.4.3	
	Near-field temperature distribution	High	8.3.4.2.4.3.1	
Borehole* stability	Borehole stability	High	8.3.4.2.4.3	
	Near-field mechanical properties			
	Fracture orientation and density	High	8.3.4.2.4.3.2	8.3.1.4.2.2
	Fracture stiffness	High	8.3.4.2.4.3.2	8.3.1.15.1.4
	Fracture shear strength	High	8.3.4.2.4.3.2	8.3.1.15.1.4
	Emplacement geometry	High	8.3.4.2.4.3.2	
	Mechanical and thermal stress loading	Medium	8.3.4.2.4.3.2	

Table 1-1. (continued)

Model	Model input	Needed confidence	*SCP* section	Study plans providing input
Waste package geometry and thermal mechanical properties				
Heat transfer (thermal) model	Interaction with host rock heat transfer	High	8.3.4.2.4.3	8.3.1.15.1.1
	Decay heat generation rate	High	8.3.4.2.4.3	8.3.1.15.1.2
Mechanical stress model	Mechanical loads	High	8.3.4.2.4.3	8.3.1.4.2.2 8.3.1.15.1.1 8.3.1.15.1.2 8.3.1.15.1.3 8.3.1.15.1.4

*The borehole stability model assumes a repository reference design using boreholes. If a different reference design is adopted, this study plan will be revised accordingly.

Table 1-2. "Rock-induced load on the waste package" is a design goal (performance measure) for Issue 1.10 and a performance parameter for Issues 1.4 and 1.5.

Issue	System element	Performance measure	Performance parameter	Characterization parameter	Tentative goal	Needed confidence
1.10	Engineered environment	Rock-induced load on waste package	Load on waste package		<1,000 kg/pkg for 1,000 yr <3,000 kg/pkg between 1,000 yr and 10,000 yr	High
1.4 and 1.5	Engineered environment		Rock-induced loading	Near-field stress distribution and rock displacements	<1,000 kg/pkg for 1,000 yr <3,000 kg/pkg between 1,000 yr and 10,000 yr	High

then passed to Issues 1.4 and 1.5 through the input pathways indicated in Fig. 1-1.

Performance Issue 1.4. Will the waste package meet the performance objective for containment as required by 10 CFR 60.113? Issue 1.4 is concerned with containment of high-level waste (HLW) during the period after closure of the repository, when temperatures and radiation levels are their highest. The resolution strategy for this issue (*SCP* Sec. 8.3.4.9) is to design WPs that will provide substantially complete containment of radionuclides for a minimum period of 300 to 1000 years after permanent closure of the repository. *SCP* Table 8.3.4.9-1 shows the performance measures and design goals for Issue 1.4 and *SCP* Fig. 8.3.5.9-3 shows how information on the NFE's geomechanical properties, gathered by this study plan, will be used to address Issue 1.4.

This study will provide information on variations in mechanical loads to Information Need 1.4.4, which requires estimates of the rates and mechanisms of container degradation in the repository environment for anticipated and unanticipated processes and events, and a calculation of the failure rate of the container as a function of time (*SCP* Sec. 8.3.5.9.4). Principal input parameters for Information Need 1.4.4 resulting from this study are summarized in Table 1-3.

Performance Issue 1.5. Will the waste package and repository engineered barrier systems meet the performance objective for limiting radionuclide release rates as required by 10 CFR 60.113? Issue 1.5 is concerned with ensuring that the controlled release of radionuclides extends from the end of the containment period to 10,000 years following permanent closure of the repository. The resolution strategy (*SCP* Sec. 8.3.5.10) is based on (1) our present knowledge of the repository emplacement environment, (2) the data gathered on waste-form performance in environments that can be related to the projected repository environment, and (3) the performance assessment of various system elements through modeling. *SCP* Fig. 8.3.5.10-1 shows the model hierarchy and how information on the NFE's geomechanical properties will be used to resolve Issue 1.5, and *SCP* Table 8.3.5.10-1 shows the principal input parameters for these models; the particular models and model inputs resulting from this study are summarized in Table 1-3.

Table 1-3. Principal input parameters resulting from this study for Issues 1.4 and 1.5.

Issue	Information need	*SCP*	Parameter
1.4	1.4.4	8.3.5.9.4	Scenario for anticipated and unanticipated processes and events
		8.4.5.9.4.1.2	Waste package environment description
1.5	1.5.3	8.3.5.10.3.5	External mechanical loads

1.2.2 Regulatory Issues

Information on the NFE's geomechanical properties is required for evaluation of site suitability as stated in 10 CFR 960.4-2-3 (NRC, 1988), which defines qualifying, favorable, and potentially adverse conditions for rock characteristics of a repository. To evaluate the rock characteristics of the potential repository horizon, this study will estimate the rock-induced loads on the WP, spalling of rock from the borehole wall, and the changes in rock properties induced by radiation and mechanical and thermal stresses over time.

The investigation of the effect of radiation on the geomechanical characteristics will address the issue raised in *NUREG*-1347, Question 17 "what substudies are planned by YMP to investigate the effects of radiation on thermal and mechanical rock properties?" (NRC, 1989).

1.2.3 Relationship to Other Studies

The information we obtain in this study will form a subset of the information that is required for characterization of the NFE. The work described in this study plan is divided into three activities: block stability analysis, borehole damage analysis, and geomechanical properties analysis (Fig. 1-2). The rationale for these activities is presented in Sec. 2.1. The studies that will provide the geochemical and hydrologic analyses for the NFE (SP 8.3.4.2.4.1 and 8.3.4.2.4.2) and the field data for the EBS (SP 8.3.4.2.4.4) are described in *SCP* Sec. 8.3.4.2. An overview of the plans for completing the repository design work is presented in *SCP* Sec. 8.3.2 and includes

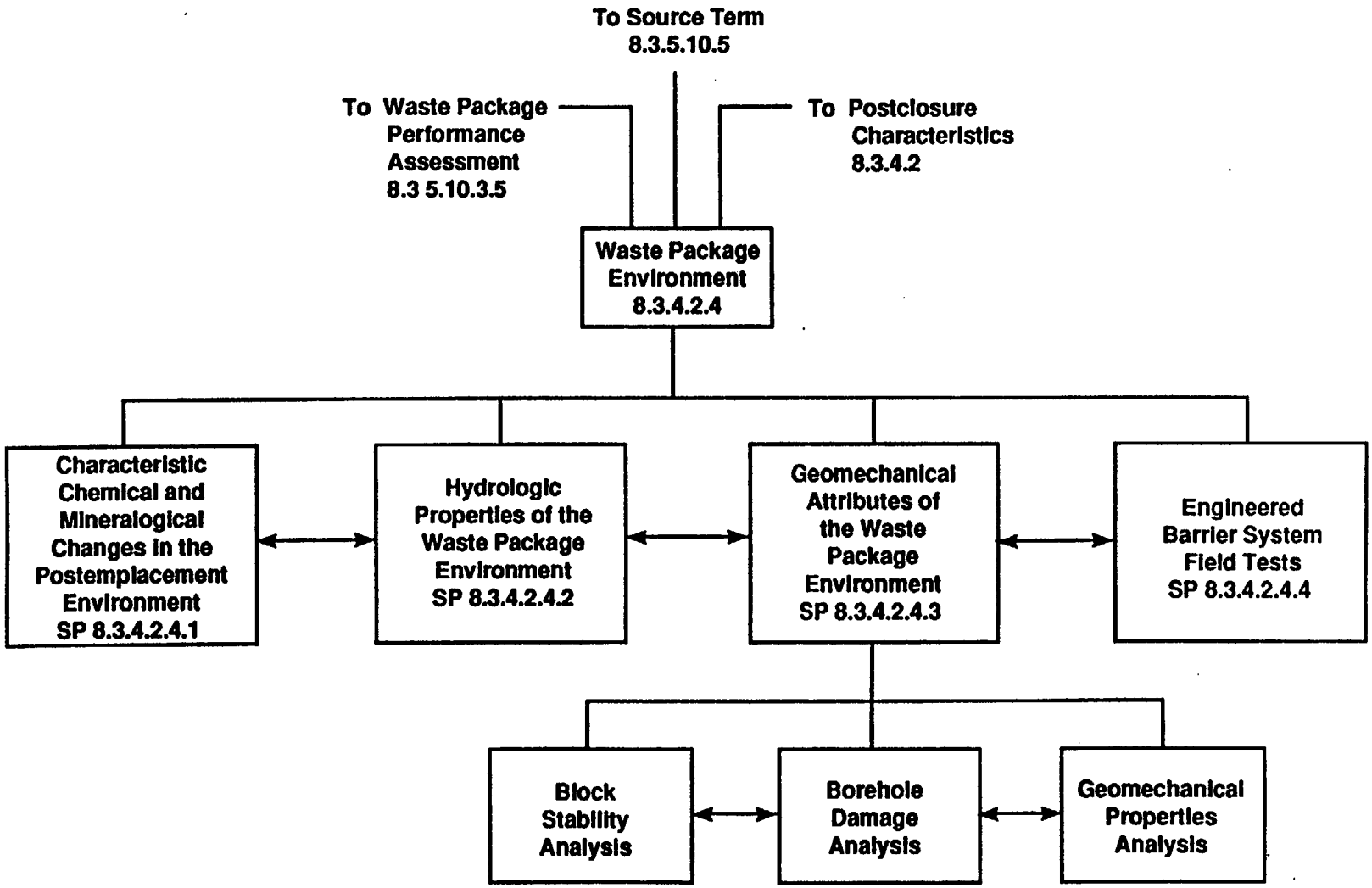

Figure 1-2. Relation of activities described in this study plan to characterization of the WP environment.

descriptions of the required research, development, and engineering activities needed to ensure that the repository is capable of satisfying applicable technical criteria. Other studies that will provide data on the rock characteristics of the potential repository site are described in *SCP* Sec. 8.3.1.4, and studies to characterize the thermal and mechanical properties are described in *SCP* Sec. 8.3.1.15. *SCP* Sec. 8.3.2.1.2 describes the approach to understanding coupled processes that may occur in the potential repository horizon and *SCP* Sec. 8.3.2.1.4 describes the models and numerical codes to be applied to the geomechanical, ventilation, seismic, and safety analyses of the repository design.

1.3 Waste Package Environment

Understanding the physical aspects of the WP and their relationship to the NFE is essential to understanding how we will address Issues 1.10, 1.4, and 1.5 (described in Sec. 1.2.1). Figure 1-3 shows the reference WP design and portions of the EBS, and their relationship to the NFE, in a vertical emplacement borehole. It is important to note that the reference design shown in Fig. 1-3 is not the final design and that several design options are being studied.

The rock unit proposed for waste emplacement is within the Topopah Spring Member of the Paintbrush Tuff and has been designated as unit TSw2 on the thermal and mechanical stratigraphic map of the region (Ortiz et al., 1985). TSw2 is a devitrified, welded, rhyolitic tuff and is thought to consist of a mass of intact blocks separated by planar fractures. Price, Connolly, and Keil (1987) report that the majority of the rock contains fine-grained matrix regions and gray-colored, vapor-phase-altered regions. In addition to these main components, the rock contains small lithophysae (open and closed) and healed fractures filled with quartz or calcite. The porosities of the matrix and vapor-phase-altered regions are approximately 8 and 49%, respectively (Price et al., 1985; Price et al., 1987). Existing data for the potential repository horizon also indicate that the fracture density may be approximately 40 per m^3. These fractures are thought to be predominantly oriented in the vertical direction (Scott and Catellanos, 1984).

Petrographic analyses have shown that the tuff consists of both primary and secondary minerals. The primary minerals were formed at temperatures in excess of 600°C in a magma chamber prior to eruption of the tuff. Secondary minerals such as cristobalite, quartz, alkali feldspars, and smectite

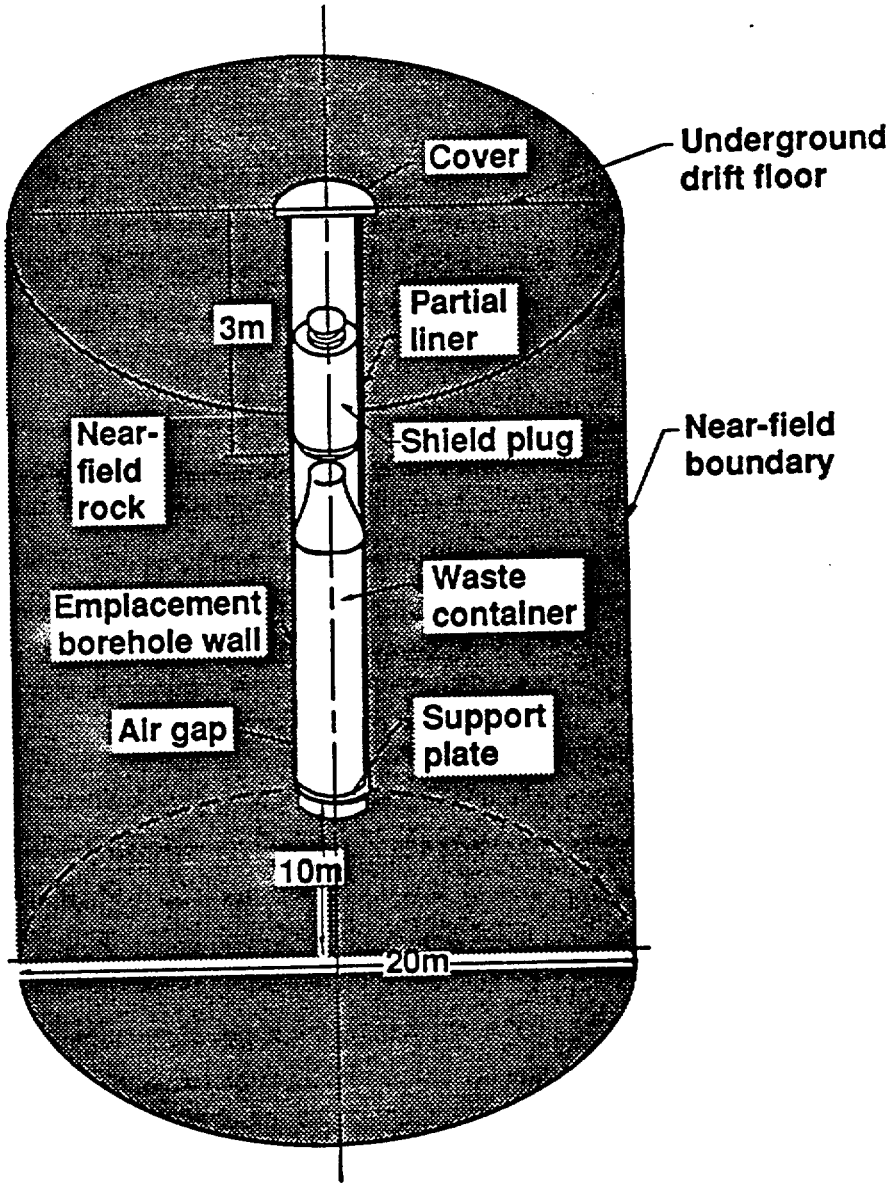

Figure 1-3. In the reference configuration, the waste container is emplaced in a vertical borehole with an air gap between the waste container and the wall of the borehole. The near field extends beyond the emplacement borehole. Adapted from the *Yucca Mountain Site Characterization Project Waste Package Plan* (Harrison-Giesler et al., 1991).

make up a substantial portion of the rock and were formed at temperatures less than 500°C either during cooling, or later as alteration products. The rock in the potential repository horizon has a mean water saturation of 65% (Montazer and Wilson, 1984).

Excavation of the repository drifts and the vertical emplacement boreholes will increase the level of stress in the rock located within a few meters of the borehole and may create mechanical damage in the rock near the borehole wall. Emplacement of the waste containers will cause a rapid increase in temperature at the borehole wall immediately after emplacement and will impose a radiation field on the rock within the first few centimeters of the borehole wall. The maximum temperature reached will depend on the nature of the waste emplaced and on the repository design, but temperatures as high as 230°C are predicted (O'Neal et al., 1984). Thermal loading will affect the stress as well as the strength and other properties of the rock near the borehole; the overall compressive stress in the NFE will increase as the temperature increases and the rock around the borehole tries to expand. As heating proceeds, however, some zones of the borehole wall (in horizontal emplacement) may experience tension due to excavation and heating geometries (Christianson and Brady, 1989). During the cooling cycle, the overall compressive stress will decrease, and zones put in tension will return to a compressive state. The heating and cooling cycle also will cause the moisture distribution in the near-field rock to be time-dependent. A detailed discussion of the mechanical, hydrological, and geochemical aspects of the WP environment will be presented by Wilder in the *Near-Field Environment Report*, which is Milestone M20 of the *Yucca Mountain Site Characterization Project Waste Package Plan* (Harrison-Giesler et al., 1991).

The physical, mechanical, and thermal properties of rock from the potential repository horizon have been determined using an extensive series of laboratory experiments (e.g., Schwartz, 1990; Nimick, 1990; Price, 1986; Price et al., 1987; Price, 1983). The mechanical data indicate that the intact rock is quite strong, with a uniaxial strength of approximately 160 MPa and a high deformation modulus. Uncracked samples have stress-strain curves that show nearly linearly elastic behavior up until failure. Samples with cracks exhibit nonlinear stress-strain behavior as expected when stress is >50% of the failure stress. Many of the physical, mechanical, and thermal properties are reported in the *Reference Information Base* (DOE, 1991).

The NFE is critically important to the design and performance of the WP and the EBS because it is thought that the release of nongaseous radioactive materials from the spent fuel could occur only in the presence of water in the NFE and, for radionuclides to be released to the near field, the water would have to provide a path (A) to (B) through the barriers as illustrated in Fig. 1-4. That is, radioactive materials would be released from spent-fuel pellets only if the following conditions existed:

(1) Liquid water is present in the air gap in sufficient quantities and for a long enough period to establish a mass transport mechanism for the nongaseous radioactive materials; gaseous radioactive materials can be transported from the container to the NFE without the need for water.

(2) Water or water vapor is present at the external surface of the waste container for a long enough time period to cause a breach in the container, say by corrosion through the wall.

(3) Water or water vapor is present inside the container for a long enough time period to cause a breach in the fuel-rod cladding (a small fraction of the rods will already have cladding penetration).

(4) Water or water vapor remains in contact with the fuel pellets for sufficient time to support release of the radioactive material from the pellets, which can then be transported through the failed barriers. Some radioactive materials also can be released from the corrosion and oxidation of the spent-fuel cladding and fuel-assembly structural hardware.

This study will determine whether the borehole wall is expected to fail over the lifetime of the repository, and, if so, what mechanical loading conditions may be imposed on the WP (either from rock-induced loading or from water corroding the container). Moreover, this study will evaluate the geomechanical changes in the rock to determine whether the changes may lead to the creation of transport pathways for the release of radionuclides into the environment. For example, coupled effects such as hydrologic diffusion through a zone of failed rock that contacts the WP may create a transport pathway. Moreover, there are other ways in which the NFE may be impacted such as changes to the behavior of the near-field rock during the heating/cooling cycle. The extent of the dry-out zone and the presence of

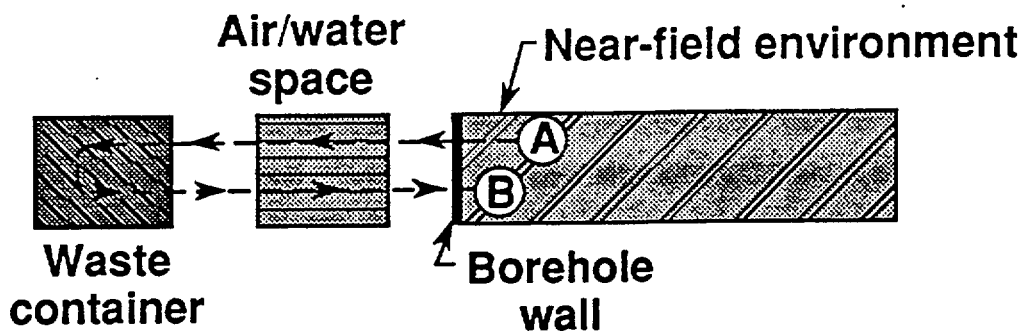

Figure 1-4. Release of radionuclides to the NFE through water path (A) to (B).

convection cells ("heat-pipes") largely depends on the absolute permeability of the rock mass and the characteristics of fractures within the effected region. The creation of microfractures and changes to fracture properties may be important factors. These types of considerations will require a close association with the researchers investigating the geochemical and hydrologic behavior of the NFE. Details of hydrological, geochemical, and other impacts on radionuclide transport will be discussed in other studies.

There are several potential detrimental effects that may result from loading the waste containers. Loading may damage the passivated surface of the container, if such a surface is present. Point loading may enhance corrosion rates or processes and, thus, adversely affect container life. Contact of the container with rock could provide diffusional and advective transport pathways for water and solutes to and from the container, which could encourage corrosion and provide access to the WP environment for dissolved radionuclides. If other structural components are present, such as liners or packing materials, they may expand different amounts in the temperature field. The resulting differential strain also could create loads that would jeopardize the stability of the borehole. If the waste container is in contact with any of the surrounding components, it could experience additional mechanical loading.

1.4 Future Studies

The activities described in this study plan are designed to collect information that can be used for license application and, thus, they must be completed prior to the application. It is important to note that additional activities are anticipated, which are still to be developed, that will aid in evaluating the impact of nonlinear, nonelastic rock responses over the very long time periods for which the WP performance must be assessed. We will develop a logic for estimating rock-induced loading and to ascertain stochastic load distribution over time for the WP. It is anticipated that these additional studies will include both field studies, conducted in the Exploratory Studies Facility (ESF) at the Nevada Test Site (NTS), and studies of natural analogues.

2.0 Rationale for Selected Study

The geomechanical conditions of the rock in the NFE will change considerably during the life of a nuclear-waste repository. As these conditions change, they may induce physical and mechanical changes in the rock that need to be considered in the design and assessment of the WP. Moreover, as discussed in Sec. 1.0, information on the expected type and amount of rock-induced loading on the WP is needed to design the WP and EBS and to assess their performance over the lifetime of the repository.

Two types of rock-induced loading need to be considered: impact loads and static loads. Impact loads may be caused by sudden movement of blocks of rock along preexisting fractures, or by sudden spalling of the borehole wall. The WP container must be able to withstand the maximum expected impact load without damage. Static loads may result from (1) rock chips spalling or sloughing from the borehole wall and then accumulating in the air gap, (2) rock blocks slowly moving into the borehole, or (3) borehole creep. Static loads may provide transport pathways across the air gap or create sites for WP surface corrosion.

In addition, information on the NFE's geomechanical properties is needed to assess the geochemical and hydrologic properties of the near-field rock over the lifetime of the repository. For example, movement along fractures may alter their hydraulic properties. Similarly, development of microcracks near the borehole may increase the surface area available for chemical reactions.

Several investigators have made deterministic calculations to evaluate the expected geomechanical behavior of rock at the borehole wall and within the first few meters surrounding the borehole during the 0–100 year period following emplacement of the WP (Arulmoli and St. John, 1987; Christianson and Brady, 1989; Johnson et al., 1989; Bauer and Costin, 1990). These studies found that, in general, the boreholes should be stable up to repository closure. However, rock is known to demonstrate time-dependent mechanical behavior when subjected to conditions of elevated temperature and stress for long periods of time, and the stresses and temperatures at the borehole wall, and within the first few meters from the borehole, are expected to remain at elevated levels for periods well in excess of 100 years (Arulmoli and St. John,

1987). Therefore, we need to investigate the time dependence of each of the following: (1) block movement along fractures, (2) spalling and borehole breakout, and (3) geomechanical properties near the borehole. This will involve characterizing the time-dependent geomechanical response of rock to the heating and cooling cycle, changing stress conditions (including seismic loading), changing moisture conditions, and the radiation exposure expected over the lifetime of the repository.

2.1 Rationale for Activities

We have planned the following three activities to characterize the postclosure geomechanical behavior of the rock and to estimate the rock-induced loading on the WP.

Block Stability Analysis

The block stability analysis will provide information on the potential for impact and static loads on the WP caused by the movement of rock blocks along pre-existing fractures.

Borehole Damage Analysis

The borehole damage analysis will provide information on the potential for static loads on the WP and for radionuclide releases caused by spalling or borehole breakout.

Geomechanical Properties Analysis

The geomechanical analysis will provide information on the nature of changes in the geomechanical properties of the rock in the NFE and how these changes will affect the performance of the WP and EBS over the lifetime of the repository. The analysis will focus on changes in the rock due to radiation, on drying of the rock due to heating, and on rewetting of the rock as it cools over time.

The three activities will incorporate time-dependent rock behavior over the entire heating and cooling cycle of the repository into deterministic analysis. They will also provide improved estimates of rock behavior to the risk-based analyses being performed for other parts of the project. The block stability and borehole damage analyses will include both analytic and experimental efforts,

while the geomechanical properties analysis will involve only experimental investigations. Temperature dependence of rock behavior also will be emphasized in these activities and the geomechanical behavior of the NFE over four temperature ranges will be considered. The temperature ranges and rationale for each range are discussed in Sec. 2.2.1. It is important to note that although some experiments described here may appear similar to experiments of other organizations, they are uniquely focused on assessing how permanent environmental changes will impact the performance of the WP over a period of 10,000 years.

The rationales for planning these particular activities are discussed in detail in the following sections.

2.1.1 Rationale for Block Stability Analysis

We need to perform an analysis on the stability of rock blocks in the NFE to determine whether the movement of blocks may lead to static or impact loading of the WP or cause changes in the physical or transport properties of the NFE over time. The formation of rock blocks resulting from excavation of the borehole and the movement of rock blocks in the NFE depend in part on the orientations and lengths of the existing fractures and their relationship to the orientation and size of the borehole (Goodman and Shi, 1985; Yow and Goodman, 1987). The movement of rock blocks also depends on the motion along fractures and crack surfaces; fractures are discontinuities in the rock mass and understanding their behavior is essential to understanding the overall rock mass response in the NFE. To perform a block stability analysis, we need to characterize the lengths, orientations, frequencies, and other physical properties of the existing fractures in the NFE under the environmental conditions expected over the lifetime of the repository.

The movement of rock blocks can affect the NFE's geomechanical attributes in several ways. For example, if combined with subsequent changes in thermal gradients, the movement can create flow paths through joint intersections and enhance hydraulic conductivity in the NFE. Also, the movement can cause fractures to initiate and grow. And, finally, the movement of rock blocks may induce fracture dilation, which decreases the contact areas between opposite fracture surfaces, thereby reducing the matrix flow across the fracture and possibly changing the transport properties in the NFE. Because the movement of rock blocks depends on fracture strength and

fracture strength has been shown to be time-dependent (Olsson, 1987, 1988), an understanding of the effect of the environment on the normal stiffness and shear strength of cracks and fractures over time is required to assess block stability.

Several aspects of the behavior of blocks and their associated cracks and fractures require investigation. One area requiring study is the nature and magnitude of the driving forces. Arulmoli and St. John (1987) and Christianson and Brady (1989) estimated the stress distribution in the near-field for a WP emplaced in a horizontal borehole, using a variety of numerical codes and constitutive relations. They calculated the stress profiles for various times up to 100 years postemplacement, and estimated areas of joint movement and borehole deformation. Limited areas of vertical joint activation were predicted for all of the models.

Christianson and Brady (1989) also found that for horizontal emplacement, zones of joint slip may develop around boreholes prior to heating:

> With the exception of joints dipping at 45°, heating has the effect of reducing the tendency for joint slip, implying that there should be no progressive deformation of the borehole as heating proceeds. The opposite conclusions apply for joints dipping at 45° when the local principal stress ratio is near unity. In this case, progressive deterioration of the borehole may accompany heating. For vertical boreholes, the predicted zones of joint slip prior to heating are small compared with those for horizontal emplacement, and the tendency for joint slip is predicted to decrease with heating, implying an increased local stability of the borehole through time.

It is important to note that the studies described so far were designed to assess borehole stability during the operational phase of the repository (100 years postemplacement) and so they considered the rock response for only that time period; the cool down phase of the thermal cycle was not considered and the rock matrix and joint properties were considered to be time-independent. To predict the postclosure geomechanical environment, the effect of the cool down phase on stress and on fracture properties must be considered. In addition, the time-dependent rock properties may be important because, for some emplacement geometries, stresses in the near-field are predicted to remain between 20 and 40 MPa for well over 100 years (Arulmoli and St. John, 1987). Estimates of the geomechanical behavior of the rock around the emplacement hole that incorporate cool down and time-dependent rock properties are still to be made.

The shaking or vibratory motion due to earthquakes also is a driving force for the movement of rock blocks and for the local opening of rock joints and fractures. Kana et al. (1989) recently reviewed the current literature on seismic loading for an underground repository and found these studies to be limited because the studies have ignored time-dependent fracture properties and the duration of shaking. Further studies are needed to predict the rock's response to seismic loading caused by earthquakes.

In addition, it is important to note that stress discontinuities along fractures are expected to occur. This phenomenon was noted in studies performed at SFT—C (Creveling et al., 1984; Wilder, 1979). These stress discontinuities may perturb the way the rock responds to the WP's thermal field. Movement along individual sections of joints also may be caused by thermally induced changes in the stress field. These aspects of fracture behavior need to be addressed.

The influences of time and environmental conditions on the mechanical properties of fractures also need further investigation. For example, Olsson (1987, 1988) investigated the joint properties of rock from the potential repository horizon, and found that the strength of a joint may increase with the time of stationary contact, and that the joint properties are dependent on stress history; Olsson did indicate, however, that this latter area needs further investigation. To date, conclusive data on the effect of environmental variables such as temperature, moisture content, and stress history on joint properties are not available. The influence of temperature on fracture creep behavior and the influence of drying and rewetting (from the heating/cooling cycle) on fracture shear strength also are poorly understood. The latter influence is of particular importance for fracture surfaces with coating materials such as clays because clay properties are sensitive to water content, temperature, and stress. Finally, we do not fully understand how various types of surface materials and fillings affect the fracture's stiffness and shear strength.

We have planned a focused effort to characterize block stability in the NFE, which will provide information and analyses of the time-dependent behavior of blocks of rock and of fracture properties in the NFE. These analyses will enable us to estimate static and impact loading that the WP may experience as a function of time. We will develop a models(s) to evaluate block movement that will allow for the time- and environmental-dependence

of fracture properties over the entire heating and cooling cycle. In addition, we will perform a series of fracture properties experiments to guide the model development and to validate the model. Estimated movement along fractures and changes in fracture properties as a function of movement will be used together to assess if block movement will cause changes in the NFE's physical or transport properties.

Model Development

During the 1980's several numerical techniques were developed or extended to provide for deterministic simulation of the behavior of fractured media (e.g., discrete element, boundary element, finite element, and displacement discontinuity analyses) (Chen, 1987; ONWI, 1983; Shi and Goodman, 1988; Hart et al., 1988). These codes can be used in conjunction with heat-transfer codes to predict the temperature field and the thermo-mechanical response over time. Most of these techniques have been implemented in two-dimensions and some have been extended to three-dimensions. Various types of constitutive models for fracture behavior and intact rock behavior have been implemented in these codes; however, much work remains to be done to fully implement time- and environmental-dependent fracture properties and kinematic constraints based on block theory (i.e., many models, such as those mentioned previously, can predict stress on a fracture surface, but they cannot assess the kinematics of motion on that surface, nor do they include temperature-dependent properties).

We need to develop a model that incorporates the kinematics of block motion and the time- and environmental-dependence of fracture properties to provide information on the size and moveability of rock blocks in order to estimate load on the WP. Time- and environmental-dependent constitutive relations for fracture behavior need to be developed and/or evaluated. An alternative method is to do a probabilistic estimate of block movement, with input based on the distribution of measured fracture properties.

Fracture Properties Experiments

We are planning a series of experiments to measure the following fracture properties: joint roughness, joint compressive strength (JCS), joint normal stiffness, joint shear stiffness, shear strength, and fracture creep. The results of these experiments will be used for modeling and will complement

the experiments planned under Study Plan 8.3.1.15.1.4 (Laboratory Determination of the Mechanical Properties of Fractures).

The surface roughness of the fracture can be described or quantified according to the surface profiles in the potential sliding direction, or the surface contours if the sliding direction is unknown. Both direct mechanical measurement and photogrammetric methods can be used depending on the location and accessibility of the fractures.

The strength of the rock comprising the fracture wall is a very important component of the strength and deformability of the fracture. Unless the fracture wall material is fresh (without weathering) the strength of the rock at or near the fracture surface is usually lower than that of the intact rock. The Schmidt hammer experiment, recommended by the ISRM (Brown, 1981), is now the most commonly used method to estimate wall strength.

The stiffness, shear strength, and creep behavior of fractures can be measured using both direct shear experiments and triaxial compression experiments. Direct shear experiments allow for large shear displacements along the fracture surface and can be used to study the effect of load reversal. Displacements across the fracture surface are also easily measured. It is difficult, however, to impose a realistic confining stress in direct shear experiments; these experiments are used in most engineering applications. Triaxial experiments allow for imposition of confining stress on the sample, but have limited sample displacement, and it is difficult to measure shear displacement across the fracture; these experiments are best for studying shear properties of materials at high confining stress. Because of the low confining stresses expected in the potential repository horizon, the potential for reversal of motion during the heating and cooling phases, and the engineering nature of the activity, we are planning to use direct shear experiments. The rotary shear technique also can be used to measure fracture properties and investigations using this technique are planned in Study Plan 8.3.1.15.1.4 (Laboratory Determination of the Mechanical Properties of Fractures).

We will need to simulate the environmental conditions expected in the repository to determine their effect on fracture properties over time. To observe the effect of moisture on the fracture properties, the experiments will be conducted on fracture samples under dry conditions, in a saturated vapor, and after resaturation with water. The normal stresses will be in the range of expected rock stress conditions in the NFE. For the creep experiments, the

normal and shear loads will be maintained constant and the normal and shear displacements will be monitored. To examine the effect of temperature (increased temperatures may alter the fracture wall material), the experiments will be conducted over a range of temperatures that will span the range expected in the NFE. Since water resaturation in the NFE is not anticipated for temperatures above the boiling point, temperatures for resaturated samples will be below 100°C.

2.1.2 Rationale for Borehole Damage Analysis

We need to perform an analysis on borehole damage in the NFE to determine if borehole wall failure will lead to static loading of the WP or create transport pathways for the release of radionuclides. Failure at borehole walls is often due to spalls (thin slabs of rock formed by fractures growing roughly parallel to the surface of the hole) or to borehole breakout (failure along macroscopic shear fractures that form after the borehole is excavated). This is dependent in part on the orientations, lengths, frequencies, and other properties of the existing fractures; the thermal and mechanical properties of the rock; and the thermal and mechanical loads imposed on the rock.

Although spalling and breakout are widely observed, the mechanisms by which they occur are poorly understood (Ewy and Cook, 1990a,b). One cause of spalling and breakout may be the accumulation of rock damage. Rock damage can be defined as the fractional area of microcracks in a cross-section of material (Costin, 1987). Vardoulakis et al. (1988) have suggested that the type and extent of damage near a borehole is dependent on stress path and boundary conditions. Field observations have shown that borehole breakouts align in the direction of maximum principal stress (Springer et al., 1986). Finally, the effects of temperature history, rock variability, and anisotropy on spalling and borehole breakout have not been studied.

We need to know if rock damage should be expected over time in the NFE. If so, what volume of rock should be expected to spall from the borehole wall, what size will the rock chips be, will the rock chips collect in the air gap, and what transport pathways may be created? We also need to estimate the overall change in the shape of the borehole over time. To answer these questions, an analysis of spalling and breakout over the lifetime of the repository and under the expected environmental conditions is needed. The results of a borehole damage analysis will allow us to estimate borehole

stability, static loading of the WP, and to assess, in part, the changes in the physical and transport properties of the NFE.

Before we can perform an analysis of borehole spalling and breakout, we need to gather information on the initial microcrack distribution in the rock before waste emplacement and on the mechanisms of damage formation (i.e., what causes cracks and fractures to develop). One mechanism of damage formation is microcracking. When rock is heated (e.g., following emplacement of a WP) the differential thermal expansion of grains can increase local stresses at grain boundaries and cause microcracking to occur (Heard and Page, 1982). Microcracking also may be caused by the phase transformation of the mineral cristobalite. Cristobalite, which may occur in significant amounts in the repository horizon, has been shown to invert from a tetragonal to cubical structure at approximately 225°C (±25°C) (Cohen and Klement, 1975) with an accompanying 5% increase in volume. This phase trans-formation could increase local stresses and cause microcracking of the rock matrix.

Microcracking over time is of interest because it changes the rock's microstructure, which in turn may change the rock's geomechanical properties. Microcracking followed by subcritical crack growth in the NFE rock over long periods of time is of concern because the formation, growth, and coalescence of microcracks in the rock at or near the borehole wall could lead to degradation of the borehole wall and the formation of rock chips or blocks.

Subcritical crack growth is the terminology used to describe crack extension that occurs at values of the stress intensity factor or the strain energy release rate, which are lower than the critical values of these parameters used in engineering to predict catastrophic crack propagation; considering the long life of the repository, however, crack growth may be significant even at low crack growth rates. It is significant that at the elevated temperatures and stress conditions expected in the NFE, rates of subcritical crack growth may be high enough that crack development through the growth of existing microcracks cannot be dismissed when estimating rock behavior. Kemeny and Cook (1990), using a conservative estimate for crack growth rate in a statistical model, estimated that slabbing will occur in 38% of the boreholes, over a period of 10,000 years, in the potential repository horizon. Mechanisms of subcritical crack growth may include stress corrosion, dissolution, diffusion, ion exchange, and microplasticity (Atkinson

and Meredith, 1987). Several theories have been developed to describe subcritical crack growth in simple systems, but to estimate subcritical crack growth in the NFE these theories need to be united with the observed behavior of rock from the potential repository horizon. We need to examine the effect of changing environmental conditions caused by the heating/cooling thermal cycles associated with waste emplacement and storage. These include increased temperature and stress during the heating phase and changing radiation and moisture conditions over the entire thermal cycle. Increases in temperature, stress, and moisture have been shown to cause substantial increases in the subcritical crack-growth rate for such rock types as granite and gabbro (Atkinson, 1984). While experiments of this type have not been done on tuff, a similar effect is expected.

To address the above concerns, a model(s) needs to be developed that allows for the time-dependent mechanical behavior of rock under the environmental conditions expected in the potential repository. We will use an iterative approach, similar to that proposed by the Board on Radioactive Waste Management (NRC, 1990), to design and develop models that are directed toward the particular problems of the NFE (e.g., time-dependent behavior of rock at elevated stresses and temperatures). Initial efforts will include scoping studies and sensitivity analyses to define the extent of the modeling effort required.

In support of the modeling effort, we will need to perform laboratory experiments to identify (a) the mechanisms by which borehole breakout and spalling in tuff may be expected to occur under particular environmental conditions, and (b) the effect of environment on the rate parameters that describe time-dependent mechanical behavior. These experiments will serve to develop a data base for the type of damage mechanisms thought to be important to the long-term behavior of rock and the rate at which these mechanisms may proceed in the NFE. The laboratory data must be used along with data from other studies as input to the model(s) to evaluate if a particular mechanism may cause problems with the mechanical integrity of the borehole over the lifetime of the repository.

The development of the models and the design of the physical and numerical experiments will evolve together to produce a modeling capability and data base in which there is confidence. This effort will use data obtained from the planned studies on the thermal and mechanical properties of rock

[Study Plans 8.1.3.15.1.1 (Laboratory Thermal Properties), and 8.3.1.15.1.3 (Laboratory Determination of the Mechanical Properties of Intact Rock)].

Model Development

For several reasons, a considerable amount of model development remains to be done. First, as stated by Starfield and Cundall (1988), rock mechanics problems can often be described as "data limited problems" (this is especially true for problems associated with the long-term response of a geologic repository), and the models currently in use are not designed for this type of problem. Second, several mechanisms thought to be important in the long-term behavior of rock, such as subcritical crack growth, creep, and the time-dependent mechanical behavior of fractures are poorly understood for rock in the potential repository horizon, and appropriate constitutive relations describing these effects have not been developed. Finally, while it is widely accepted that rock failure occurs by the growth and coalescence of microcracks in the brittle and quasi-brittle regime (Horii and Nemat-Nasser, 1985; Tapponnier and Brace, 1976), mathematical formulations are in the beginning stages and require a substantial amount of development before they can reliably predict the long-term behavior of rock. If the deterministic modeling effort described above proves inconsistent or unsuccessful, we can use alternative methods such as risk-based probabilistic methods, similar to those used by Kemeny and Cook (1990).

Laboratory Studies

We have identified four types of laboratory experiments that will serve to develop a data base for the type of damage mechanisms thought to be important to the long-term behavior of rock and the rate at which these mechanisms may proceed under the conditions expected in the repository horizon over time. Hollow cylinder and true triaxial block experiments will provide information on borehole damage mechanisms, and short rod and double torsion experiments will provide information on the fracture mechanics properties and the rate of subcritical crack growth of rock in the potential repository horizon. The rationale for each is described below.

We can perform hollow cylinder experiments at the LLNL rock mechanics laboratory. We can measure the induced rock damage in hollow cylinders of rock from the repository horizon under a series of temperatures

and stress conditions in an axisymmetric stress field. The experiments will characterize the effect of the variability of the matrix material, including rock anisotropy and rock mineralogy, on the mechanism and the extent of damage. Jaeger and Cook (1976) pointed out that "hollow cylinders with axial load and internal and/or external fluid pressure provide the most ready method of studying the strength and fracture of rock under a wide variety of principal stresses." In addition, several investigators have successfully used hollow cylinder experiments to investigate borehole behavior under conditions of elevated stress (Adams, 1912; Haimson and Herrick, 1985; Guenot, 1987). In particular, Ewy and Cook (1990a,b) observed borehole breakouts in hollow cylinders similar to those observed in the field.

The hollow cylinder experiments are appropriate for several reasons. First, to assess matrix parameters, experiments must be conducted on several samples at each experimental condition. Hollow cylinder specimens are relatively small and easy to prepare, and the experimental apparatus is simple and straightforward to operate; thus, the technique is appropriate for performing numerous experiments with very precise control of the environment. Second, the technique uses an axisymmetric stress geometry, which provides for relative ease of analysis. An experimental apparatus capable of the appropriate stresses and temperatures can be easily constructed and maintained. Finally, hollow cylinder experiments have the advantage that they can be conducted on specimens made from core samples, which are available from a variety of locations around the potential repository site (see Sec. 2.2.2).

We also can perform true triaxial block experiments in the LLNL rock mechanics laboratory. We can measure the induced rock damage in blocks of rock from the repository horizon under a series of temperature and stress conditions in a true triaxial stress field. The experiments will characterize the effect of the stress path, temperature, loading rate, heating rate, cooling rate, sample mineralogy, sample anisotropy, and fractures on the mechanisms and extent of borehole damage. These experiments are appropriate because the sample size of 45.7 × 45.7 × 45.7 cm (18 × 18 × 18 in.) allows inclusion of natural fractures in the sample; the triaxial loading system allows imposition of complex loading paths; and, the placement of a heater in a central borehole (size of borehole can vary) in the sample allows imposition of temperature gradients. While providing for the advantages of triaxial stress and large

sample size to include fractures, the experiments also provide for relatively precise control of the boundary conditions on the block, which aids in interpreting and modeling the results. Control is not as good as with smaller and simpler hollow cylinder experiments, but it is much better than for in-situ experiments where boundary conditions are often poorly known and difficult to control.

An alternative method to obtain information on damage mechanisms near a borehole is to induce high thermal and mechanical stresses in tunnels around the boreholes, and a limited number of field experiments will be included in a subsequent revision of this study plan. Field experiments, however, are relatively more expensive and time consuming and cannot be as precisely controlled as laboratory experiments. Furthermore, instruments for laboratory-based true triaxial block and hollow cylinder experiments are readily available and off-the-shelf apparatus can be used with minor modification, whereas field experiments require very specialized or prototype equipment.

Double torsion and short rod experiments are necessary to provide data on the effect of environment on the fracture mechanics and rate parameters that describe crack growth. We can perform both experiments in the LLNL rock mechanics laboratory.

We can perform double torsion experiments to determine the rate of subcritical crack growth at environmental conditions thought to be representative of the NFE. This parameter is used in fracture mechanics theory for analysis of time-dependent crack extension. For double torsion experiments, we can measure the relation of the rate of subcritical crack growth to values of the mode I stress intensity factor (K_I) in a sample of rock from the repository horizon under a series of temperature and moisture conditions. Experiments also can be performed to determine the effect of sample size and anisotropy and to determine whether or not exposure to radiation affects the rate of crack growth. We chose this technique over other fracture mechanics techniques, such as compact tension, double cantilever beam, or three point bending because: (1) the stress intensity factor is independent of crack length over much of the sample length, (2) the stress intensity factor is directly related to the applied load, and (3) the crack velocity can be determined without the need for multiple crack-length measurements

(Meredith and Atkinson, 1985). None of the other techniques discussed above can provide all of these advantages.

Short rod experiments can be used to measure the mode I critical stress intensity factor (or fracture toughness) (K_{IC}). This parameter is used in fracture mechanics theory as a criterion for crack extension. For short rod experiments, we can measure the fracture toughness in a cylindrical sample of rock from the repository horizon under a series of temperature and moisture conditions and as a function of radiation exposure. These experiments will provide values of fracture toughness as a function of temperature, moisture content, sample size, and orientation with regard to bedding planes or other features of the rock fabric. We chose this technique over other alternatives, such as the three point bending and compact tension methods, because for the short rod geometry:

1. No fatigue precracking is required because a natural crack is produced during the stable growth phase of the rock sample loading.
2. Neither crack length nor displacement measurements are required if the rock sample conforms to size restrictions of linear elastic fracture mechanics.
3. To evaluate fracture toughness on rock samples meeting size restrictions, a soft loading machine can be used.
4. The short rod technique uses less core length for sample preparation than any of the other techniques considered.

2.1.3 Rationale for Geomechanical Properties Analysis

We will perform an analysis on the geomechanical properties of the intact rock in the NFE to determine if emplacement of the WP will change the strength or other properties of the rock. Emplacement of the WP will impose a high gamma-radiation field on the rock in the NFE and will impose a drying and rewetting cycle on the rock as it is heated and subsequently cooled. These changes may affect the rock's geomechanical properties and lead to borehole damage or the creation of transport pathways. Therefore, we need to characterize what will be the nature and magnitude of changes in the geomechanical properties of the NFE rock under these particular conditions over the lifetime of the repository.

The radiation will affect the rock within the first few centimeters of the borehole wall. Although previous studies on the effect of radiation on geomechanical properties of granite (Durham et al., 1986) concluded that

radiation did not affect uniaxial strength, the effect of radiation on tuff from the potential repository horizon is still to be determined. What we need to know is whether exposure to radiation will alter the mechanical strength or other geomechanical properties of rock in the NFE.

For tuffaceous rocks, such as those in the potential repository, there is no existing information about what effect drying under high temperatures (after WP emplacement) and then rewetting (as WP cools) may have on the rock's mechanical properties. The drying/rewetting cycle is expected to have very little effect on the tuff, which has a low percentile (<2%) of hydrous minerals. Measurements, however, need to be made to confirm this expectation.

To account for the expected environmental conditions in the NFE, including the stress changes due to excavation, thermal loading, and localized stress concentration, we have planned a series of uniaxial and triaxial experiments. These experiments will aid in determining the effects of radiation and a drying/rewetting cycle on the compressive strength and elasticity of rock from the potential repository horizon. We chose uniaxial and triaxial experiments because of the key role of microfractures in affecting the stress-strain behavior and strength during these experiments; microfractures also affect fluid and thermal transport properties. Thus, if the mechanical properties are affected by radiation or drying and rewetting, the transport properties also may be affected and further investigation should be considered. (Note: we consider the effect of a drying and rewetting cycle on fractures in Sec. 2.1.1, and the effect of radiation on fracture mechanics properties in Sec. 2.1.2.)

We can perform the uniaxial and triaxial experiments at the LLNL rock mechanics laboratory. For the radiation experiments, irradiation of samples with gamma radiation can be done at the ^{60}Co irradiation pool. These samples will receive the dose at a higher rate than is expected in the repository. However, the primary gamma-ray energies of the ^{60}Co source are of the order of 1 MeV, whereas the dominant energy transfer mechanism is expected to involve Compton interactions. Therefore, no direct enhancement of damage per rad is expected at the higher doses. If a time-dependent recovery of damage should occur, however, laboratory scaling to shorter times would tend to increase damage in the laboratory samples for a given absorbed dose, in keeping with the conservative design of the experiment. To

minimize the possible effects of time-dependent recovery, the delay between irradiation and mechanical testing will be kept brief.

These experiments will determine stress-strain relations and failure stress as a function of confining pressure and will determine whether irradiated samples and rewetted samples have different mechanical behavior than control samples. These experiments will complement the mechanical testing proposed in Study Plan 8.3.1.15.1.3 (Laboratory Determination of Mechanical Properties of Intact Rock).

The uniaxial and triaxial compression experiments will be performed at a constant strain-rate, as opposed to either a constant stress-rate or an experiment with a more complex loading path. In the constant strain-rate experiment, the loading ram advances at a constant rate, while in the constant stress-rate experiment, axial stress increases at a constant rate. For rocks such as welded tuff, which are nearly linear elastic at the usual testing strain rates specified in the standard ASTM and ISRM (Brown, 1981) suggested test methods, we plan to use the constant-strain-rate method because it is more mechanically stable at stresses near or at sample failure. Only one strain rate ($\sim 10^{-4}$/s) will be studied and the effect of strain rate on the properties will be considered based on the results of experiments in Study Plan 8.3.1.15.1.3.

2.2 Rationale for Selected Number, Location, Duration, and Timing of Experiments

2.2.1 Number

The number of experiments that will be necessary for site characterization will, in general, be different for each property considered. A preliminary estimate of the necessary number for each mechanical property can be obtained using existing mechanical data and information provided by repository design and performance assessment through the performance allocation process. In many cases, the number of experimental data needed is chosen such that it is believed that a proportion, γ, of the data population [where $\gamma = (1-\alpha)$] will fall within the limits $\bar{x} \pm k\bar{x}$ with $1-\alpha$ level of confidence, where $\bar{x}$ is the mean data population and k is a proportional multiplier of the mean. Once experimental data have been obtained, they can be evaluated to determine whether the information is adequate or whether more experiments are required.

At the present time there are only a small number of data available for the mechanical properties of fractures within the potential repository horizon and there are even fewer data available for the fracture mechanics properties of rock from this unit (or for the behavior of this rock under the various loading conditions that are expected in the potential repository and will be simulated in hollow cylinder and true triaxial block experiments). Consequently, for the block stability and borehole stability analyses, it is not possible to make reasonable estimates of the number of samples needed from a statistically-based argument. Therefore, for these two activities professional judgement has been used to determine the initial number of experiments required.

For both the block stability and borehole damage analyses, we have planned a series of scoping studies, which will include sensitivity analysis, modeling, and a suite of initial parametric experiments to determine the effects of environmental parameters such as temperature and moisture content on time-dependent mechanical behavior. The number of initial parametric experiments is shown in Table 2-1. The number for each type is

Table 2-1. Number of experiments planned for initial parametric studies.

Analysis	Experiment	Number
Block stability	Joint normal stiffness	26
	Joint shear stiffness	52
	Shear strength	26
	Fracture creep	26
Borehole damage	Hollow cylinder	12
	True triaxial block	8
	Double torsion	50
	Short rod	50
Geomechanical properties	Uniaxial (drying/rewetting)	35
	Uniaxial (radiation)	35
	Triaxial (drying/rewetting)	35
	Triaxial (radiation)	35

estimated based on professional judgement for parameter evaluation. These numbers also will be used for the design of sampling activities. After data are obtained for the initial parametric experiments and sensitivity analysis and preliminary modeling are completed, the adequacy of the data for satisfying model input requirements will be evaluated, and more experiments will be planned if necessary.

It is important to note that the parametric studies are designed to investigate the temperature dependence of the rock behavior. And the number of experiments reflects experiments at different temperatures. As mentioned in Sec. 2.1, four temperature ranges will be considered. These ranges are designed to allow investigation of major thermally-induced phenomena on the geomechanical behavior (e.g., changes in saturation due to drying, boiling of pore water, the phase transformation of cristobalite and trydimite, differential thermal expansion of minerals, changes in rock moduli, and any geomechanical changes in the rock). Experiments also will be performed at temperatures higher than are expected in the repository. These high temperature experiments will be used to accelerate rates of mechanisms that affect the geomechanical behavior. The temperature ranges and rationale for each range are given in Table 2-2.

To determine the number of experiments required for the geomechanical properties analysis activity, we followed the logic presented for the determination of number of experiments for mechanical properties of intact rock (Study Plan 8.3.1.15.1.3). The data requirements are expressed using γ and $k\bar{x}$ as discussed above. In order to use an assigned level of confidence to estimate a required number of samples, we assume that the proportion of the population (γ) required to lie within the tolerance limits ($\pm k\bar{x}$) is the same as $(1 - \alpha)$, where $(1 - \alpha)$ is the confidence level and that the numerical values listed in Table 2-3 can be associated with each qualitative confidence level.

Many of the tolerance limits defined in design or performance assessment issues are expressed as a fraction of the mean value of a parameter. Bowker and Lieberman (1972) provide a table of values for a parameter (k), where the tolerance limits are expressed as $\bar{x} \pm ks$. Using existing data to calculate the mean value ($\bar{x}$) and standard deviation (s) of a parameter, k can be determined by equating ks and the fraction of $\bar{x}$ required by a design or performance assessment issue. Given the values of k, α, and γ,

Table 2-2. Rationale for temperature ranges to be used in experiments.

Range no.	Temperature range	Rationale
1	23–90°	This temperature range will allow us to provide background data; assess whether or not lower temperatures will aid in the isolation of the WP; and assess the effect of geochemical changes on mechanical properties that are associated with increasing temperature in this range.
2	90–150°	This temperature range will allow us to determine the effect of boiling pore water on rock properties; and assess the effect of geochemical changes on mechanical properties that are associated with increasing temperature in this range.
3	150–250°	This temperature range will allow us to determine the effect of cristobalite and other mineral phase transformations on geomechanical properties; and assess the effect of geochemical changes on mechanical properties that are associated with increasing temperature in this range.
4	250–300°	Elevated temperatures, when possible, will allow us to drive mechanisms at higher rates.

Table 2-3. Values of α and γ corresponding to confidence levels defined by issues.

Specified confidence level	α	$\gamma = (1 - a)$
High	0.05	0.95
Medium	0.10	0.90
Low	0.25	0.75

Table 8.3 of Bowker and Lieberman (1972) can be used to obtain an estimate of the number of samples (n) necessary to provide the required statistical confidence in the parameter. However, for a heterogeneous and poorly characterized material, such as rock from the potential repository horizon, there is not enough information available regarding the variability of some properties with which to reliably estimate a preliminary number of required samples. Moreover, for other properties, the initial estimate of the standard deviation is too high and/or the initial tolerance limit is too tight for this approach to be applied directly. In both cases, an alternate approach has been employed which, although arbitrary, will allow a preliminary sampling strategy to be formulated. In the alternate approach, the required number of initial experiments is estimated by determining the number of experiments needed to attain a consistent but arbitrary tolerance limit (i.e., the k value). Based upon engineering judgement, a value of k equal to 2.5 was selected for determining the initial number of samples. For the three confidence levels, the corresponding numbers of samples are 3[$\gamma = (1 - \alpha) = 0.75$], 11[$\gamma = (1 - \alpha) = 0.90$], and 34[$\gamma = (1 - \alpha) = 0.95$]. These three values have been rounded to 5, 10, and 35 for the convenience of this study. These numbers of samples are consistent with previous testing experience with similar rocks and with the number of samples required for adequate estimates of the mean and standard deviation for the properties.

Table 1-1 shows that the needed confidence for thermal and mechanical properties of the postemplacement WP environment is high, which implies that for irradiation and drying/rewetting experiments $n = 3.5$ as shown in Table 2-1. This is consistent with the results of Durham et al. (1986) who

found that testing 33 matched pairs of irradiated/unirradiated samples was adequate for the statistical test to show that gamma irradiation had no effect on a quartz monzonite.

2.2.2 Location

Samples of unit TSw2 will be obtained for our studies from core holes planned as part of the systematic drilling program (*SCP* Sec. 8.3.1.4.1.1 and 8.3.1.4.3.1.1) and from the Exploratory Studies Facility (ESF). Figure 2-1 shows the locations of core holes as currently planned by the systematic drilling program. Core and block samples obtained from the ESF will be taken beyond any damage zone that may be formed by the particular technique used to excavate the ESF. Samples will be selected in such a way as to provide analysis of lateral and vertical variability of unit TSw2.

Until the horizon rock is available, we will develop methods and evaluate techniques based on the results of experiments performed on rock that we consider to be similar to the rock in the potential repository horizon.

2.2.3 Duration and Timing

Laboratory experiments will be conducted somewhat parallel over a period of a few years, as rock samples from the repository horizon become available. The results from these experiments will be used as input for model development and validation. Finally, a series of reports will be written to summarize our findings on the geomechanical attributes of the WP environment. See Sec. 5.0 "Schedules and Milestones" for the expected sequence, duration, and interaction of these activities.

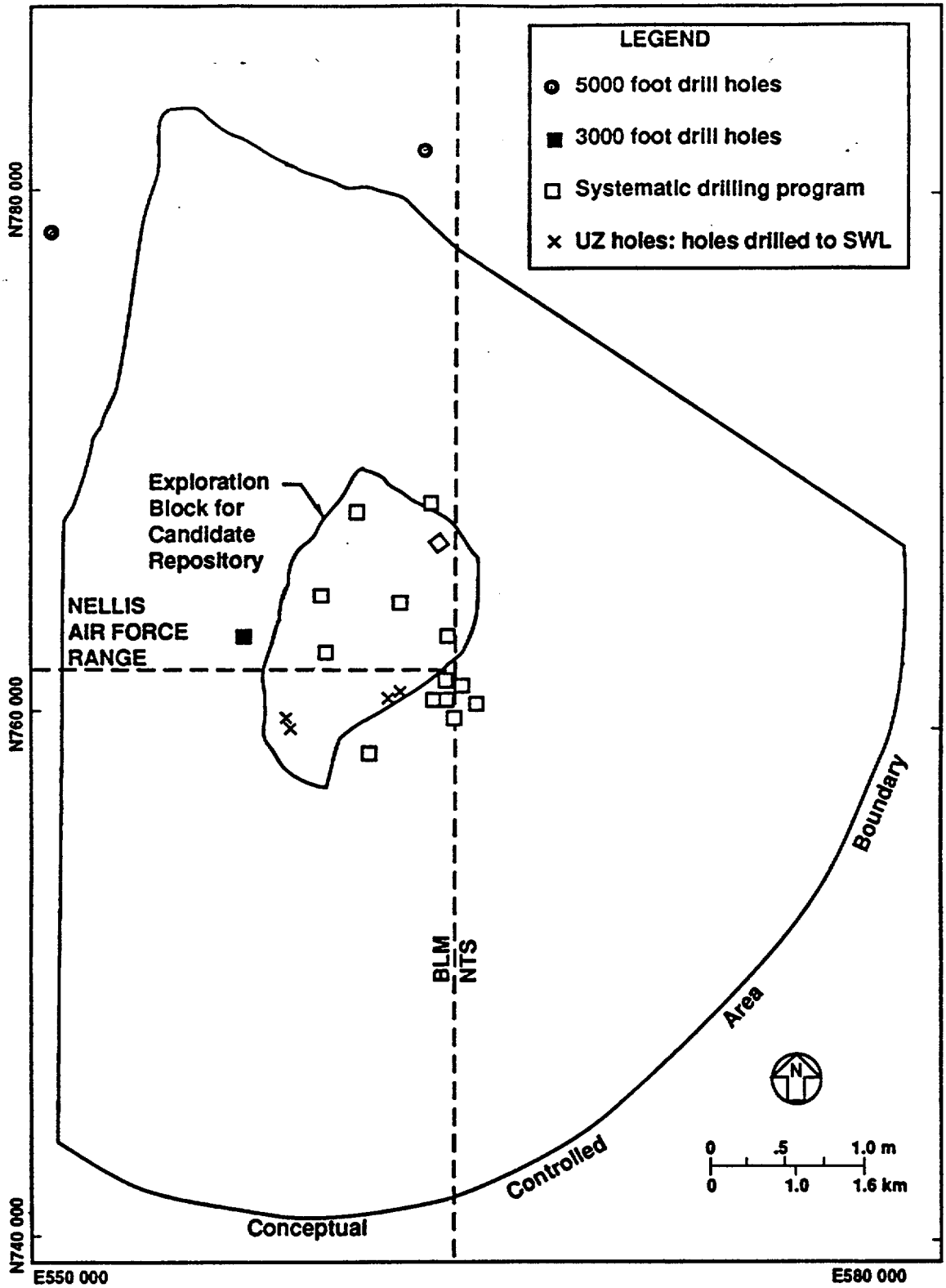

Figure 2-1. Map of drilling sites for the systematic drilling program. (See *SCP* Secs. 8.3.1.4.1.1 and 8.3.1.4.3.11 for additional details.)

2.3 Constraints: Factors Affecting Selection of Experimental Methods and Analytical Approaches

2.3.1 Potential Impacts on the Site

For our experiments we will use samples taken from surface-based drilling and from the ESF. The potential impact on the site related to the drilling of new core holes will be addressed when the various proposals for the systematic drilling program are evaluated (*SCP* Sec. 8.3.1.4.3.1.1). The potential impact on the site related to construction of the ESF is discussed in Sec. 8.4 of the *SCP*.

2.3.2 Simulation of Repository Conditions

To characterize the long-term geomechanical behavior of the WP environment, the range of environmental conditions for particular experiments will be selected to include the values of parameters expected to occur in the near-field region around the WPs. Simulation of how mechanical properties of the WP environment evolve with time is limited by assumptions inherent in the conceptual models used in the calculational codes. The effect of these assumptions on predicted mechanical properties will be described and evaluated in reports that present the results of the analyses.

2.3.3 Required Accuracy and Precision of Parameters

This study will evaluate the potential for rock-induced load on the WP and for changes in the geomechanical properties of rock in the NFE over the lifetime of the repository. This study will determine whether the tentative goals for the "rock-induced load" performance parameter can be met with "high" confidence (Table 1-2). To meet this requirement, we have adopted a conservative approach to the study of time-dependent geomechanical behavior. That is, we have expanded this study beyond that of a typical underground engineering analysis in order to evaluate the effects of radiation, subcritical crack growth, and a drying and rewetting cycle on rock properties. In addition, we will analyze the time-dependent behavior of joints and the mechanisms of borehole damage. Rock creep will be addressed in Study Plan 8.3.1.15.1.3 (Laboratory Determination of the Mechanical Properties of Intact Rock).

Many of the methods for determining the geomechanical behavior of rock that are described in this study plan differ negligibly from alternative methods in terms of experimental accuracy. However, the double torsion experiments to monitor the rate of subcritical crack growth are considered to be the most accurate way to measure this parameter in rocks (Evans, 1972). Hollow cylinder and true triaxial block experiments were selected on the basis of their physical attributes, such as loading geometry and loading flexibility.

The range of values for parameters measured by the planned experiments will depend on the variability and heterogeneity of the samples. If the range of values for a particular parameter(s) is such that the study cannot attain the necessary confidence level, then the approach or experiment will be revised. At present no constraints of this type are anticipated. The goals for parameter measurement accuracy, precision, and associated variability will be determined during detailed planning for each experimental study and reflected in activity plans. The goals will be determined commensurate with the objectives of the specific experiment. The accuracy and precision capabilities of available ASTM and other standard methods will be considered when establishing the goals and selecting measurement and analytical methods. In general, the goals for accuracy and precision will follow ASTM recommendations when recommendations are available and appropriate. Table 2-4 summarizes examples of proposed accuracy, precision, and variability for confining stress, temperature, displacements, and relative humidity. Where practical, measurement precision and accuracy will be monitored and evaluated during the conduct of individual experiments. The method(s) and frequency of monitoring precision and accuracy will be documented in the appropriate activity plan and will include such mechanisms as calibration checks and quality control samples. Either goals or actual (when monitored) precision and accuracy will be accounted for when computing derivative parameters (e.g., stress and strain). Reports of experimental studies will include a discussion of actually obtained measurement precision and accuracy (when monitored) and an evaluation of their effect on experimental results. Many experiments will be performed at elevated temperatures and the effect of temperature on the measuring device will be taken into account when reducing the data. In some cases, specialized apparatus or techniques will be used for experiments at elevated temperatures.

Table 2-4. Example summary of accuracy and precision goals for selected experimental parameters.

Parameter	Variability	Measurement Accuracy	Measurement Precision	ASTM designation
Confining stress	± 1% of target value	1%	0.5%	D2664-86
Temperature	± 2% of target value	0.5°C	0.1°C	D4535-85
Displacement	Gauge length adequate to measure 0.5% sample strain	2% of reading	0.2% full scale	—
Relative humidity	± 5% of target value	5%	1%	—

2.3.4 Capabilities and Limitations of Analytical Methods

It is important to note that elastic and elastoplastic solutions and solutions incorporating cracks and fractures provide only approximations to material behavior, especially in the case of a heterogeneous material such as rock. In addition, analytical methods are limited in their ability to incorporate time, scale, and actual configurations that can be expected in the potential repository. Several sophisticated numerical codes are available to compute the geomechanical properties of rock at environmental conditions typical of the NFE. However, much work remains to be done to fully implement time- and environment-dependent fracture properties. This is significant because although the time-dependent changes in geomechanical properties may be due to processes acting slowly at the microstructural scale, the long-term effect of those changes may manifest through rock behavior on the macrostructural scale, such as the formation of cracks, spalling of the borehole wall, and the movement of rock blocks. Current models do not have the capability to span

these scales. We will address this limitation in the course of our model development.

The capabilities of analytical methods were not a basis for selecting specific experiments. For the short rod and double torsion experiments (Sec. 3.2) and the uniaxial and triaxial strength experiments (Sec. 3.3), procedures for gathering and reducing the data are well-established.

We will use analytical methods to develop constitutive models and to reduce laboratory data. The analytical methods used in the currently available models are limited because they lack the capabilities of considering time-dependent behavior and assuming a continuous media. The capability of linearly elastic fracture mechanics and the concept of damage to incorporate the effects of microcrack growth on time-dependent failure in brittle materials makes use of these methods advantageous to this study.

2.3.5 Time Constraints

Time constraints did not affect our choice of experiments. The experiments using surface-based samples can begin as soon as implementing documents are completed and the samples become available. Alternative methods provide no advantage regarding time. The experiments that require samples from the ESF will be constrained by the ESF construction schedule; any delays in construction will in turn delay our studies.

Development of constitutive models and numerical codes for the block stability and borehole damage analyses can begin as soon as the implementing documents are completed. We will choose the numerical codes based on their analytical and numerical capabilities and their ability to meet applicable QA requirements within the time constraints of the project. Based on the current schedule, it should be possible to develop the conceptual and numerical models for the block stability analysis before the ESF is constructed and available. However, because the block stability analysis requires information on the frequency, orientation, and properties of fractures in the potential repository horizon, the time available for this analysis may be constrained by delays in the ESF construction or accessibility. Verification and validation of numerical codes and use of the validated codes to estimate geomechanical properties of the NFE depends on the availability of qualified data from this and other studies and on the availability of the ESF for a series

of validation experiments that will be described in future revisions of this study plan.

2.3.6 Scale and Applicability

Emplacement of the WP is expected to increase the stress field and the temperature in the NFE within a few borehole radii of the emplacement hole. Block movement, borehole spalling, or borehole breakout may occur over distances ranging from a few centimeters to a few borehole radii from the borehole wall. Moreover, as previously mentioned, time-dependent mechanisms may operate on the microstructural scale. Thus, sample size will be varied for many of our experiments and the size of the sample will be taken into account when experimental data are analyzed. Field experiments will be included in a subsequent revision of this study plan and when the results of these field experiments are available we will compare laboratory and field observations of damage mechanisms to evaluate the effect of scale on the mechanisms active in the NFE and to identify any limitations on the applicability of the results.

2.3.7 Interference With Other Experiments

Each of the experiments described in this study plan were evaluated and found to have negligible interference with other experiments. The descriptions of these evaluations follow.

Fracture mechanics experiments, borehole damage experiments, and uniaxial and triaxial experiments will be performed in a laboratory and will not interfere with other experiments. Samples for these experiments will be obtained from cored boreholes and from the ESF as described in Sec. 2.2.2. The core samples obtained from cored boreholes by the systematic drilling program (see Sec. 2.2.2, Fig. 2-1) will provide samples from zones outside of those areas disturbed by other experiments. The EBSFT plan (Study Plan 8.3.4.2.4.4) calls for the drilling of large heater holes in the ESF with diameters ranging from 30.5 cm to 76.2 cm (12 to 30 in.) and the 30.5-cm-diam. (12-in.-diam) cores that are removed will provide adequate samples for our experiments (with the exception of true triaxial block experiments). These samples will be selected from specific intervals of core so that they will not interfere with other experiments that support the EBSFT. For true triaxial block experiments, we will obtain cubic samples during excavation of the

drifts or alcoves associated with the ESF. Techniques to be used in block excavation will be described in lower-level implementing documents.

For fracture properties experiments performed in the laboratory, we will use samples taken during the excavation of drifts or samples of core from heater holes in the EBSFT Facility. There will be minimal interference with other experiments. The potential impact of this study's anticipated field tests on other experiments, or lack thereof, will be described in future revisions of this study plan.

2.3.8 Interference With Exploratory Studies Facility

The samples for true triaxial block experiments will be obtained from the drifts, alcoves, and drill holes associated with the ESF. This sampling is expected to have negligible interference with the ESF.

It is important to note that delay of the ESF will impact this study because it will delay the availability of the true triaxial samples and of the samples needed to study time-dependent fracture strength. Delay of the ESF also will delay the availability of information on the characteristics of the in-situ fracture system, such as the spacing, apertures, and orientations of fractures.

3.0 Description of Experiments and Analyses

3.1 Block Stability Analysis

3.1.1 Approach

The stability of the blocks and the potential for movement along fractures will be evaluated as a function of several environmental variables including time, temperature, moisture content (dry and rewetted), and lithophysal content (if results of systematic drilling show this is necessary); as a function of fracture filling materials; and under conditions of periodic seismic loading.

We will develop a predictive capability, based on existing computational methods, for simulating the behavior of fractured media. Numerical methods will be used for both two- and three-dimensional problems. Three-dimensional analysis is important because one of the parameters central to the evaluation is the kinematic stability of a given block. To estimate block stability over long times, the requisite constitutive models will be identified and mathematical models will be developed or adapted as appropriate and implemented in the codes. Fracture properties measured in laboratory experiments will be used to evaluate constitutive relations at conditions found in the NFE.

3.1.2 Methods

The block stability analyses include: (1) identification of the blocks and their shapes and maximum sizes based on the fracture information, (2) analysis of kinematic stability of blocks in order to identify the potential movable blocks and their failure modes, and (3) stability analysis for blocks in the NFE using numerical methods. Because the stress conditions and the rock's geomechanical and fracture properties will be affected by the thermal loading cycle, the block stability also will be evaluated for a series of temperatures representative of those expected in the NFE. The block stability also will be analyzed for the condition when the temperature of rock in the NFE cools down from its peak temperature, and for the associated rewetting that may occur.

Studies defined in *SCP* Sec. 8.3.1.4.2.2 will identify the different sets of fractures (including orientations) that will be encountered in the WP environment. A statistical analysis will then find and characterize the representative sets of fractures in the repository horizon. Finally, the properties of each set of fractures will be characterized and formulated in a constitutive model.

One method of analysis that describes block movement is keyblock analysis (Goodman and Shi, 1985; Yow and Goodman, 1987). First, blocks of rock and their shapes are defined according to the orientations of the sets of fractures. The fracture orientations, along with the dimensions of the openings and the emplacement hole, control the maximum possible keyblock sizes, which in turn determine the maximum block loads on the supports and the WP. The movable keyblocks are identified and the potential failure modes are examined using a kinematic stability analysis. These tasks can be accomplished using either stereographic projection techniques or the computer techniques developed by Goodman and Shi (1985) and Shi and Goodman (1988).

The stability of a block will be examined using two methods. First, the stability will be studied without considering the deformation of the rock and the fractures, with resistance to failure provided only by the friction caused by the weight of the block on the fracture surfaces. This is a limit equilibrium analysis for situations where the stress distributions surrounding the keyblock and the deformation properties of rock and fractures are either not available or are uncertain. This type of stability analysis can be performed with the aid of stereographic projection, and is likely to be more conservative than analyses that take into account the surrounding stresses and fracture deformations.

A second method considers the effects of the temperature and stress conditions in the NFE on the block stability. This method will be implemented into appropriate discrete element methods, such as DDA (Shi and Goodman, 1988) and 3DEC (Hart et al., 1988). The stress conditions will be based on simulations of the thermomechanical response of the NFE. The rock and fracture properties under various environmental conditions will be obtained in this study plan, and Study Plans 8.3.1.15.1.3 (Laboratory Determination of the Mechanical Properties of Intact Rock), 8.3.1.15.1.4

(Laboratory Determination of the Mechanical Properties of Fractures), and 8.3.1.15.1.1 (Laboratory Thermal Properties).

For both of these methods, the temperature field as a function of time will be integrated into the analysis. The temperature field and thermal response will be computed using an appropriate heat-transfer code or by adding thermal capability to one of the mechanical codes if necessary. Computed thermal response will be compared with that estimated for hydrology studies (Study Plan 8.3.4.2.4.2) to assure consistency.

Fracture Properties Experiments

To characterize the properties of fractures under the environmental conditions expected over the lifetime of the repository, we will perform a series of experiments to determine: joint roughness, compressive strength of the rock comprising the wall of a fracture, joint normal stiffness, joint shear stiffness, and peak and residual shear strength of the fractures. In addition, we will perform fracture creep experiments to understand the time- and temperature-dependent behavior of fractures at elevated temperatures.

For the fracture properties experiments, we will use fractured rock samples from the repository horizon interval of TSw2. The samples will contain fractures representative of various sets of fractures described in the fracture survey (see *SCP* Sec. 8.3.1.4.2.2.3). The healing, filling, and surface condition (e.g., weathering and mineralization) of the fractures will be noted. Samples for dry and saturated experiments will be prepared following procedures presented by Nimick et al. (1987). The procedures include oven-drying for samples to be tested dry, and oven-drying followed by vacuum-saturation for samples to be tested under saturated conditions.

We will determine the mechanical properties of the fractures at temperatures that span the range expected in the NFE. The equipment will be placed inside an environmental chamber, or the samples will be placed inside a heating enclosure, so that we may control the temperature. The temperature will be raised to the desired degree at a rate low enough to avoid damage from differential thermal expansion. To determine the effect of moisture (liquid or vapor) on the mechanical properties, we will conduct experiments under dry conditions, in a saturated vapor, and under a resaturation of water. The controlled and measured parameters for these experiments are listed in Table 3-1.

We will measure the roughness of a fracture's surface following the experimental procedures described in the ISRM's "Suggested Methods for Quantitative Description of Discontinuities in Rock Masses" (Brown, 1981). The roughness will be described and quantified according to the surface profiles along the direction of potential sliding. If the sliding direction is unknown, surface contours of the fracture will be measured first, and the profile will be obtained later when the sliding direction is given. To obtain the surface profile, we will use photogrammetric methods and mechanical techniques, such as those using a carpenter's contour gauge or a disc-clinometer. A digital profile of joint surfaces also may be taken using an instrument consisting of a precision three-axis positioning system, which moves a probe over the surface to record surface height, similar to that described by Keller and Bonner (1985). The probe is moved along a straight line to record a two-dimensional surface profile, and the process is repeated until a profile of the entire surface area is recorded.

The joint compressive strength (JCS) will be determined based on the relationship between the compressive strength of the rock wall and Schmidt hammer readings. The ISRM's "Suggested Method for Determination of the Schmidt Rebound Hardness" (Brown, 1981) will be used to perform the Schmidt hammer experiment.

We will measure the normal and shear stiffness of fractures using equipment similar to that used for the direct shear strength experiments (see below). In the normal stiffness test, the normal load will be applied in steps until a linear relation is reached between the normal displacement and normal load. Approximately 10 load increments will be applied; the rate of change of normal displacement should be <0.05 mm over a period of 10 min before the next load increment is applied. The normal displacement at the end of each normal load will be recorded. Several unloading/reloading cycles will be necessary to obtain the shear stiffness of the fracture. Unloading/reloading cycles also may be applied to evaluate hysteresis effects.

We will measure the peak and residual shear strengths of the fractures following the experimental procedures described in the ISRM's "Suggested Method for Laboratory Determination of Direct Shear Strength" (Brown, 1981). We will use samples (preferably square but not limited to square)

Table 3-1. Fracture properties experiments.

Type of experiment	ISRM's suggested methods	Control parameters	Evaluated parameters
Joint roughness	Quantitative description of discontinuities in rock mass	N/A	Roughness profile Joint roughness coefficient (JRC)
Compressive strength	Quantitative description of discontinuities in rock mass, determination of the Schmidt rebound hardness	N/A	Joint compressive strength (JCS) Schmidt rebound hardness
Joint normal stiffness	Laboratory determination of direct shear strength	Normal stress Temperature Moisture Rock fabric	Normal displacement
Joint shear stiffness	Laboratory determination of direct shear strength	Normal and shear stresses Temperature Moisture Rock fabric	Shear displacement
Shear strength	Laboratory determination of direct shear strength	Normal stress Temperature Moisture Rock fabric	Shear stress at and after failure Shear displacement Normal displacement
Fracture creep	Laboratory determination of direct shear strength	Normal and shear stress Temperature Moisture Rock fabric	Shear displacement Normal displacement Failure time

containing a fracture plane with a minimum area of 2500 mm^2. First, a predetermined load will be applied normal to the fracture plane, and the normal deformation will be recorded. Then the shear loading will be applied continuously by controlling the rate of shear displacement as specified in the ISRM procedure. The shearing experiment will continue passing the peak shear load to reach the residual strength when the shear stress variation is <5% over a shear displacement of 1.0 cm. Deformations and loading will be recorded during shear loading.

We will determine the time-dependent behavior of fractures at elevated temperatures using fracture creep experiments. The experiments will provide information on the time-dependent fracture properties on a time scale of several months. The experiments will use equipment similar to that used in the direct shear strength experiments. In addition, other experimental techniques such as rotary shear of thin walled, hollow cylinders may be used to gain insight into fracture creep. For most creep experiments, the temperature and the normal and shear loads on the fracture will be maintained constant for long periods of time (weeks to months).

3.1.3 Technical Procedures

Each experiment will be broken into logical work segments to allow for orderly planning and preparation for completion of each modeling activity or experiment. Detailed planning for each segment of work will be accomplished and reflected in Individual Software Plans (ISPs) for modeling efforts and in Activity Plans for experiments. Quality assurance (QA) grading will be performed for each segment of work. Such grading will identify the scope of the applicable work and whether that specific segment of work is quality affecting or nonquality affecting (scoping activities are nonquality affecting). QA grading will identify the quality procedures and the technical implementing procedures (TIPs) applicable to the individual segments of work. QA grading will be performed sufficiently in advance of the commencement of each segment of work so that Activity Plans, ISPs, and TIPs can be prepared, reviewed, and approved, and all required training can be completed. We anticipate that for the fracture properties experiments,

TIPs will be based on the appropriate ISRM's suggested methods (Brown, 1981), which are summarized in Table 3-1. The tolerance, accuracy, and precision required in the fracture properties experiments will conform to those specified in the appropriate ISRM procedures.

3.1.4 Equipment

Modeling for the block stability analysis will require a computer workstation. The fracture properties experiments will require the following equipment: Carpenter's contour gauge, disc-clinometer, photogrammetrical equipment, digital profile device, Schmidt hammer, environmental chamber, shear strength apparatus, and data recording equipment. Details will be given in the appropriate implementing procedure.

3.1.5 Representativeness

The block stability analysis will provide an assessment of the stability of the emplacement hole considering the movement of the blocks formed by the intersection of the emplacement hole with the pre-existing fractures. Because of the local variations of the fracture orientations and rock and fracture properties, we will use statistical analyses to obtain the representative values and ranges of these parameters. These values and ranges will then be used to evaluate the probability of block occurrence, block size, and the stability of the blocks over time.

These estimates will be produced by computer-based modeling of the NFE. These models are idealizations of the actual NFE and, in general, represent the rock in the NFE with an equivalent continuum or with discrete elements composed of continuous material. In these models, faults and major fractures are generally ignored. Input to the models is in the form of data based on laboratory and/or field observations. Constitutive relations, derived theoretically, or based on empirical observations, are used to adapt the models to particular environments. Moreover, it is important to note that rock is inherently heterogeneous and many properties vary widely over short distances. In addition, the boundary conditions can be clearly defined in a model, although in actual practice the boundary conditions are often poorly known.

Despite these limitations, computer models can be effective in investigating and predicting selected aspects of material behavior. Recent

developments in discrete element analysis and other techniques for analysis of behavior of discontinuous media have greatly improved the accuracy of the models, and laboratory and field experimental techniques are emerging that can provide an understanding of potential block movement under conditions similar to the NFE. In particular, the results of fracture properties experiments will provide a description of the rock's fracture properties, which is necessary for the block stability analysis for the openings of the potential repository horizon. The variation of fracture conditions such as composition, weathering, filling, and roughness within the potential repository horizon will be documented and analyzed in order to establish the representativeness and uncertainties of the fracture properties obtained in these experiments.

In some instances, difficulties may arise in distinguishing natural fractures from mechanical breakage in the sampling process. Also, experiments will be conducted in a laboratory and on a much smaller scale that for the potential repository. In addition, the potential repository horizon is expected to contain many fractures, while fracture properties experiments will be performed on samples containing one fracture. To assess the representativeness of these experiments, results will be compared with block movement around underground openings in tuff. Particular attention will be given to underground openings in locations where emplacement of a WP has been simulated (e.g., G-Tunnel) or where other repository-related studies have been conducted (e.g., Apache Leap, AZ). In addition, as stated in Sec. 1.4, a series of field studies will be conducted under future revisions of this study plan.

3.1.6 Range of Expected Results

The output of the block stability analysis will include: (1) shapes and sizes of the potential movable blocks to be encountered, (2) failure modes of blocks, and (3) stability of each typical block as a function of time. The accuracy of the results depends on the accuracies of the fracture orientations, rock properties, and fracture properties used as input data and on the constitutive models. We expect the analysis that considers the deformation characteristics of the rock and fractures will give more accurate results than those given by the limit equilibrium analysis.

The range of expected results for the fracture properties experiments is not well-defined. There have been a limited number of experiments

performed on natural fractures in tuffaceous rocks and those experiments have been inadequate for our purposes. To date, very limited data are available for fracture properties experiments and most of the data are for polished precut joints. The coefficient of friction for a dry polished precut joint in tuff is about 0.6 (Olsson, 1987, 1988). The coefficient of friction increased to about 0.7 for a water-saturated precut joint. Moreover, Olsson found that the strength of a joint may increase with the time of stationary contact and that joint properties are dependent on stress history; although, he did indicate that the latter needs more investigation. We expect to obtain similar values for these parameters. Experiments to determine the temperature effect on the shear strength of joint in tuff have not been performed. Inadequate data are available for properties of natural fractures in tuffaceous rocks. The fracture shear strength generally increases with increasing roughness and JCS. Creep experiments on fractures in tuffaceous rocks have not been performed. The effect of humidity and temperature on the natural fracture in tuff is not well-defined.

3.1.7 Techniques of Data Reduction and Analysis

Data for these experiments will be taken, in general, digitally using up-to-date data acquisition techniques. Data for some parameters also may be recorded manually. Data will be reduced numerically and/or graphically as appropriate to the employed data reduction technique. For the joint roughness and JCS experiments, data will be reduced graphically and analytically following the procedures given in the ISRM's suggested method for each experiment (Brown, 1981). For the normal and shear stiffness experiments, the normal and shear stress will be plotted against displacement, and the relationship will be obtained accordingly. We will develop a model for creep behavior based on the experimental results of displacement versus time under various loading, moisture, and temperature conditions.

3.2 Borehole Damage Analysis

3.2.1 Approach

The purpose of the borehole damage analysis is to determine how much spalling or sloughing of the borehole wall can be expected over the lifetime of the repository. Because spalling or sloughing of the borehole wall during postclosure may be a time-dependent phenomenon, we will develop a model(s) that incorporates the time-dependent mechanical behavior of rock under the environmental conditions expected in the repository. We also will perform a series of physical and numerical experiments.

The development of the constitutive equations and the design of the physical and numerical experiments will evolve together using an iterative approach similar to that proposed by the Board on Radioactive Waste Management (NRC, 1990). We will focus our model development efforts on developing conceptual models and constitutive equations for the long-term behavior of rock at conditions appropriate to the NFE. Moreover, the laboratory experiments will be designed to identify the mechanisms by which borehole breakout in tuff at appropriate environmental conditions may be expected to occur, and to determine the effect of environment on rate-parameters that describe time-dependent mechanical behavior. With the results from these experiments, we can develop a data base for mechanisms, such as subcritical crack growth, thought to be important to the long-term behavior of rock. This laboratory data, along with data from other studies, will provide input to our borehole damage analysis model(s). We will also perform clearly defined numerical experiments that simulate the laboratory experiments. This iterative approach will allow us to assess the problem of borehole damage and to develop models and an experimental data base that address these problems. We can then use the model(s) to evaluate whether or not time-dependent borehole damage will affect the geomechanical integrity of the borehole.

<u>Model Development</u>

We will initially focus our model development on mathematical models and constitutive relations for the mechanical behavior of rock over time and at the environmental conditions appropriate to the NFE. To predict the NFE mechanical response, we will identify and/or develop the required

material models and describe their limitations. We expect these constitutive models to include expressions for the rate of subcritical crack growth, the elastoplastic response of the rock mass, local stress fields due to phase transformations of minerals, and rock anisotropy. The models will depend on environmental parameters such as temperature, stress, moisture, and, if necessary, radiation. The models will then be incorporated into the appropriate numerical codes. We will address the model, code, and code interface limitations. And, following the prescribed procedures, we will document the codes.

Our initial predictions will be derived from input data generated by our experiments and the experiments of others [e.g., Study Plans 8.3.1.15.1.3 (Laboratory Determination of Mechanical Properties of Intact Rock) and 8.1.3.15.1.1 (Laboratory Thermal Properties)]. We will compare and evaluate these predictions with the existing data. Additional model development may then be required. Subsequently, we will use the code(s) to predict in situ behavior, and following that we will perform field experiments (to be included in subsequent revisions of this study plan) and data comparisons. If the comparisons with field data are considered acceptable, the code will have been validated to some degree. However, additional modifications may be required.

Laboratory Experiments

Damage Mechanisms. The hollow cylinder experiments will be performed to investigate borehole damage mechanisms in an axisymmetric stress field. These experiments will determine how the stress level, temperature, loading and heating rates, radiation exposure, and the mineralogy and anisotropy of the rock affect the mechanisms and extent of damage to a simulated borehole. We will perform the experiments over a range of temperatures which spans the range expected in the NFE, and at a series of confining stresses that are adequate to induce tangential stresses at the borehole wall, similar to the stresses expected in the repository. In addition, we may perform some experiments at temperatures and stress levels above those expected in the repository in order to accelerate the rate of the damage mechanisms.

The true triaxial block experiments will be performed to investigate borehole damage mechanisms in a true triaxial stress field. These

experiments will determine how the stress path, temperature, loading rate, heating rate, cooling rate, sample mineralogy and lithophysal content, sample anisotropy, and fractures affect the mechanism and extent of damage to a simulated borehole. We will perform the experiments over a range of temperatures that will span the range expected in the NFE and at a variety of loading paths and stress conditions. As with the hollow cylinder experiments we may perform some true triaxial block experiments at temperatures and stress levels above those expected in the repository in order to accelerate the rate of the damage mechanisms. To determine the effect of anisotropy due to bedding planes or other features of the rock fabric, we will recover blocks with one set of faces oriented parallel to the rock fabric of interest, and then we will make measurements in directions parallel and perpendicular to the direction of the fabric.

For both the hollow cylinder and true triaxial block experiments, the various characteristics of the damage zone will be determined as a function of temperature, applied stress, sample mineralogy, and sample orientation with respect to bedding planes or other features of the rock fabric such as lithophysal content. The parameters to be considered for true triaxial block and hollow cylinder experiments are summarized in Table 3-2.

Rate Parameters. To identify the effect of the environment on rate parameters that describe time-dependent geomechanical behavior, we will use well-known fracture mechanics testing techniques in which tensional cracks are produced and allowed to extend in rock samples under known loading conditions.

The rate of subcritical crack growth in rocks is often described by the empirical relation

$$v = AK_I^n$$

where v = velocity, A = an environmental constant, K_I = the mode I stress intensity factor, and n = a material constant. This relation was first proposed by Charles (1958). Atkinson (1984) and Atkinson and Meredith (1987) have shown that v is a function of both temperature and moisture content, that is $v = v(T,\theta)$, where T = temperature and θ = moisture. Our initial approach to developing an expression for $v(T,\theta)$ will be based on the reaction rate theory following Atkinson and Meredith (1987).

Table 3-2. Borehole damage experiments.

Type of experiment	Control parameters	Evaluated parameters
Hollow cylinder	Confining stress Axial stress Pore pressure Temperature Sample orientation Radiation Rock mineralogy/fabric	Axial strain Radial strain Volumetric strain Spatial distribution of microcracks Damage mechanisms Anisotropy
True triaxial block	Triaxial stress field Stress path, loading rate Temperature (borehole) Heating rate, cooling rate Block orientation Rock mineralogy/fabric	Strain in horizontal plane Strain in vertical plane Volumetric strain Spatial distribution of microcracks Damage mechanisms Anisotropy
Double torsion	Force Displacement Moisture content Temperature Sample size Sample orientation Stress intensity factor Displacement rate Radiation Rock mineralogy/fabric	Displacement Force Crack velocity Fracture toughness Anisotropy
Short rod	Displacement Moisture content Temperature Sample size Sample orientation Radiation Rock mineralogy/fabric	Tensional force Maximum tensional force Fracture toughness Anisotropy

We will perform double torsion experiments to measure crack velocity. The rate at which cracks may be expected to grow in the NFE will be determined as a function of the applied stress intensity factor, temperature, moisture content, sample size, and sample orientation with regard to bedding planes or other features of the rock fabric. Experiments will be performed on radiated and unradiated samples.

We will perform short rod experiments to measure fracture toughness. If we can determine fracture toughness versus temperature, we can then estimate fracture toughness versus time elapsed after waste emplacement; if we can estimate fracture toughness versus time, we can then establish criteria for the catastrophic growth of existing cracks and fractures versus time. The values of fracture toughness will be determined as a function of temperature, moisture content, sample size, and orientation with regard to bedding planes or other features of the rock fabric such as lithophysal content. Experiments will be performed on radiated and unradiated samples.

We will measure both fracture toughness and crack velocity at a range of temperatures that spans the range expected in the NFE. We will determine the effect of moisture content for a given temperature by performing experiments on two like samples at that temperature, one in a dry environment and another in a saturated vapor. Depending on the initial results of the experiments at the above conditions, we may conduct additional experiments at intermediate moisture contents.

To determine the how the size of the sample affects the measurement, we will perform the double torsion and short rod experiments using a variety of sample sizes. To determine the effect of sample orientation with respect to bedding planes, we will prepare test samples in such a way as to allow for fracture toughness and crack velocities to be measured in planes that are perpendicular and parallel to the rock within the plane of the rock fabric. These parameters will be determined in two mutually perpendicular directions. The control and evaluated parameters for both the double torsion and short rod experiments are summarized in Table 3-2.

These experiments are exploratory in nature and, as discussed in Sec. 2.2.1, the exact number of experiments that are required to characterize the dependence of fracture toughness and crack velocity on the various parameters discussed above will be included in detailed implementing

documents for the activity. These experiments will be conducted on samples of unit TSw2 that will be obtained from the locations described in Sec. 2.2.2.

It is important to note that the designs of the experiments are preliminary and may be revised as experience is gained during the development of experimental and analytical techniques and procedures.

3.2.2 Methods

Model Development

As stated in Sec. 3.2.1, to develop a predictive capability we must identify and develop constitutive models for the analysis. We must then implement these models in numerical codes to make the initial predictions. Finally, we must evaluate these predictions and revise the constitutive models and codes as appropriate.

Deformation and failure of brittle rock occurs by the growth and coalescence of microcracks. Two methods have been developed to describe response. In one method, discrete cracks and fractures are input into a code along with constitutive relations for the materials and the cracks, and the cracks and fractures are allowed to grow and interact. In the second method, a continuum approach is used based on the assumption that an ensemble of cracks behave in a manner similar to an individual crack.

We plan to evaluate several codes that have been developed which provide for discrete cracks and fractures. These codes employ the Finite Element Method (FEM), Discrete Element, and/or Boundary Element numerical techniques, and can incorporate a wide variety of constitutive models. Some have been generalized to three dimensions. To predict borehole damage over long times, and at changing temperature and moisture conditions, existing codes will be modified to accommodate the appropriate constitutive equations for elastoplastic moduli of the rock mass, nonlinear properties of the joints, and fracture propagation. Included properties of the rock are compressive and tensile strength, coefficient of friction, and fracture toughness. The codes use these and other parameters along with boundary stresses and thermally induced stresses to obtain a stress distribution throughout the region of interest in the WP environment. Joints are allowed to slip if stresses are sufficient to overcome friction, and cracks are allowed to grow if stress intensity at the tip is sufficient. The stress is then recalculated

and the solution at a given time step is obtained by iteration. The solution at the time step then represents all crack and joint motion that has occurred as a result of environmental and time-dependent effects. Alternative constitutive models for the rock mass and fracture behavior will be developed and implemented in codes to address such concerns as potential heterogeneity of the rock mass and anisotropy of the rock matrix. Various types of failure criteria also will be implemented such as the linear Mohr-Coulomb and the nonlinear Hoek-Brown criteria. If results of the experimental work performed on this study and for other studies [e.g., Study Plan 8.3.1.15.1.2 (Laboratory Thermal Expansion Testing)] indicate that the stress distribution is strongly influenced by phase changes, an algorithm to simulate this behavior will be added to the numerical code(s).

Another method for analysis of rock in terms of discrete cracks and fractures uses a statistical model. A new technique of this type will be evaluated for analysis of time-dependent rock behavior. The technique employs the concept of "self-organized criticality," which is defined as the tendency of large interactive systems to naturally evolve toward a critical state in which a minor event can lead to catastrophe (Bak and Chen, 1991). In the study of rock mechanics, the minor events can be thought of as events of material failure at a microstructural level (such as crack extension and associated acoustic emissions), which lead to coalescence and propagation of cracks and ultimately to rock failure (Lockner et al., 1991).

We plan to use data on rock microstructure (i.e., the spatial and size distribution of cracks, fractures, and petrographic parameters) along with environmental and rate parameters as input to a statistical code that accommodates self-organized criticality. Crack growth, interaction, and coalescence predicted by the code can be interfaced with FEM or other types of codes to evaluate stress and temperature conditions at a given time step. The revised stress and temperature distributions are then returned to the statistical code and rock damage or failure at the given conditions is assessed.

Finite element codes that use the continuum technique also have been developed. This technique assumes that an ensemble of cracks contained in some region of the body (of rock of interest) behave in a manner similar to an individual crack. Then equations describing the response of an ensemble of cracks is assumed to be identical in form to that describing the response of a single isolated crack. A damage vector is then derived which describes the

total damage accumulated during the entire history of deformation (Costin, 1987).

Hollow Cylinder Experiments

The purpose of these experiments is to gain insight into the failure mechanism that may occur around boreholes in the proposed repository horizon. An axisymmetric compressive stress is imposed on rock specimens, prepared as hollow cylinders. Elevated temperature also may be imposed. Stress and temperature levels are raised until nonelastic deformation and/or failure is produced at the internal surface of the cylinder. Deformations are recorded and the microstructure of the specimen may be preserved using a pore casting technique (Pittman and Duschatko, 1970; Ewy and Cook, 1990a,b). The stress and strain data from the experiment and the microstructural data obtained from examination of the pore casts are used to characterize the specimen behavior.

To perform these experiments, specimens shaped as hollow right circular cylinders are prepared from samples of the potential repository horizon. The pretest microstructure of the specimens will be characterized using core ends and trimmings from the specimen preparation. The core ends and trimmings will be sectioned and examined using scanning electron microscopy (SEM) and optical microscopy. The cylindrical specimens are then assembled into a triaxial test cell (Fig. 3-1). This cell allows control of pressure and/or stress in four regions, confining pressure (P_C) around the circumference of the cylinder, internal pressure (P_I) which is pressure in the inside the simulated borehole, pore pressure (P_P) which is fluid pressure in the rock matrix, and axial stress (σ_1) in the direction parallel to the borehole. Minimal values of P_C, P_I, and σ_1 are then applied. The sample assembly is then heated/cooled at rates <1°C/min along the desired temperature path. σ_1, P_C, P_I are maintained at moderate levels as determined in scoping experiments with $\sigma_1 \geq P_C \geq P_I$ (note that the temperature for pore casting experiments must be in the operational range of the pore casting fluid being used). The pore casting fluid (if used) is then injected into the pore space and maintained at a minimal pressure, P_P. The desired loading path for the particular experiment is then imposed and parameters (e.g., axial and radial deformation) and volumetric deformation of the borehole are monitored. After the desired load path has been imposed, and if a pore casting fluid is

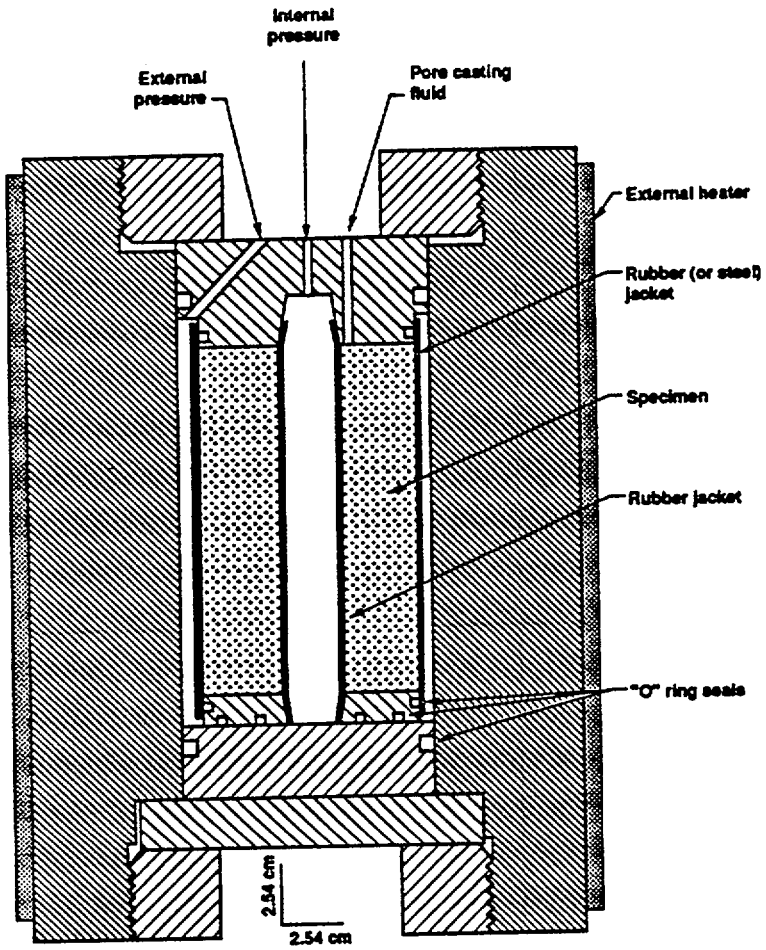

Figure 3-1. Schematic of a hollow cylinder experiment. Adapted from Ewy and Cook (1990a).

used, the specimen is cooled to quench the pore casting fluid and preserve the microstructure. Stress is relieved and the specimen is removed from the apparatus for sectioning. We expect to use confining pressure of 200 MPa or less for these experiments and internal pressures of 100 MPa or less. We also expect to use pore pressure of 5 MPa for the pore casting fluids.

The microstructure of the pre- and post-test specimens with pore casting fluid will be examined using one of several microscopic techniques including optical or SEM. Images of the surface are recorded on film and then digitized, or they are directly digitized (Fig. 3-2). The digital images of the microstructure are analyzed using a variety of stereological or other techniques (e.g., see discussions by Berryman and Blair, 1986; Zheng et al., 1989; Blair and Berryman, 1992).

Various characteristics of the damage zone (e.g., microcrack density and orientation) will be determined as a function of temperature, applied stress, sample mineralogy, and sample orientation with respect to bedding planes or other features of the rock fabric. The microstructure will be analyzed in light of the petrographic descriptions that are available for rock from the potential repository horizon. To determine the effect of sample orientation with respect to bedding planes or to other features of the rock fabric, we will prepare hollow cylinder samples with a cylindrical axis parallel and perpendicular to the rock fabric of interest.

True Triaxial Block Experiments

For this experiment, a block-shaped rock sample is loaded into a true triaxial loading frame. The loading frame uses a system of flat jacks and actuators to stress the sample. Various diagnostic systems, such as displacement transducers, thermocouples, strain gauges, and other standard rock mechanics diagnostic equipment, are installed on and in the sample and a heating element is placed in a borehole located in the center of the block.

The desired state of stress is then imposed on the block at the desired loading rate and along the desired loading path. The block is then heated, using both internal and external heaters, to obtain the desired temperature distribution and held at this condition. The temperature and/or stress fields may then be altered. Heating/cooling rates will be carefully controlled and rapid ramping will be avoided. The experimental set up is shown in Fig. 3-3.

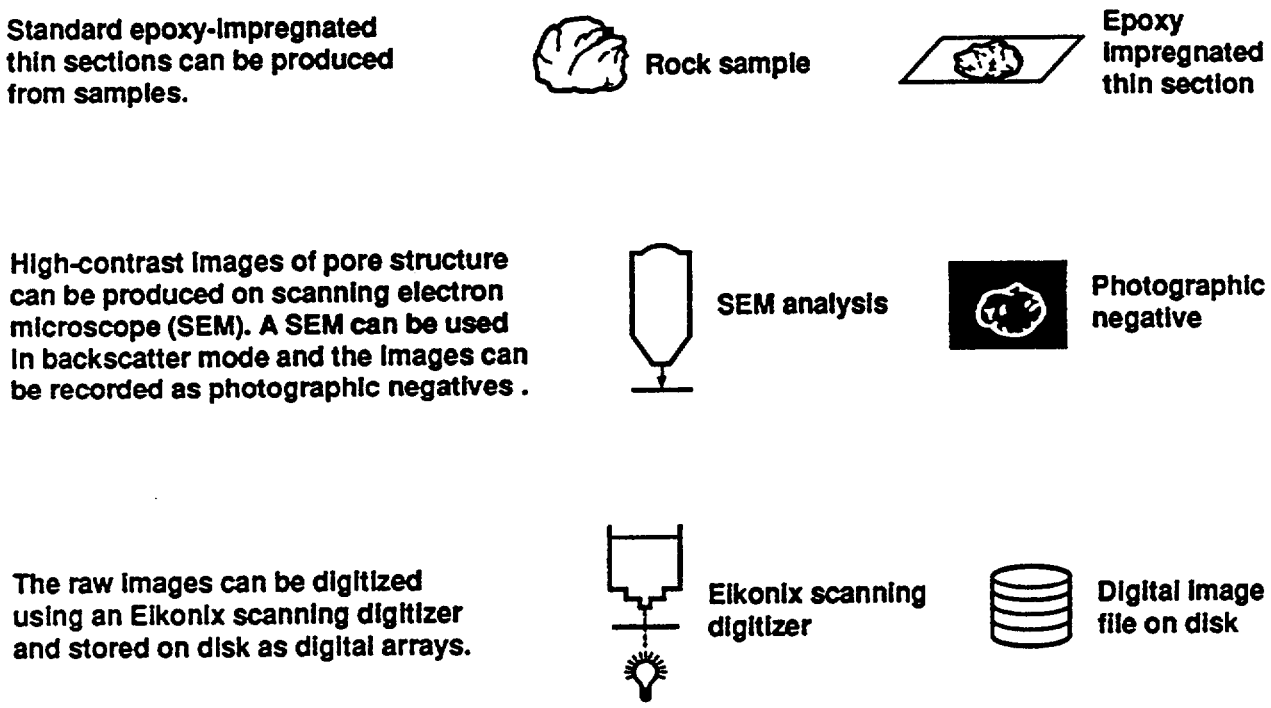

Figure 3-2. Schematic of image production methodology.

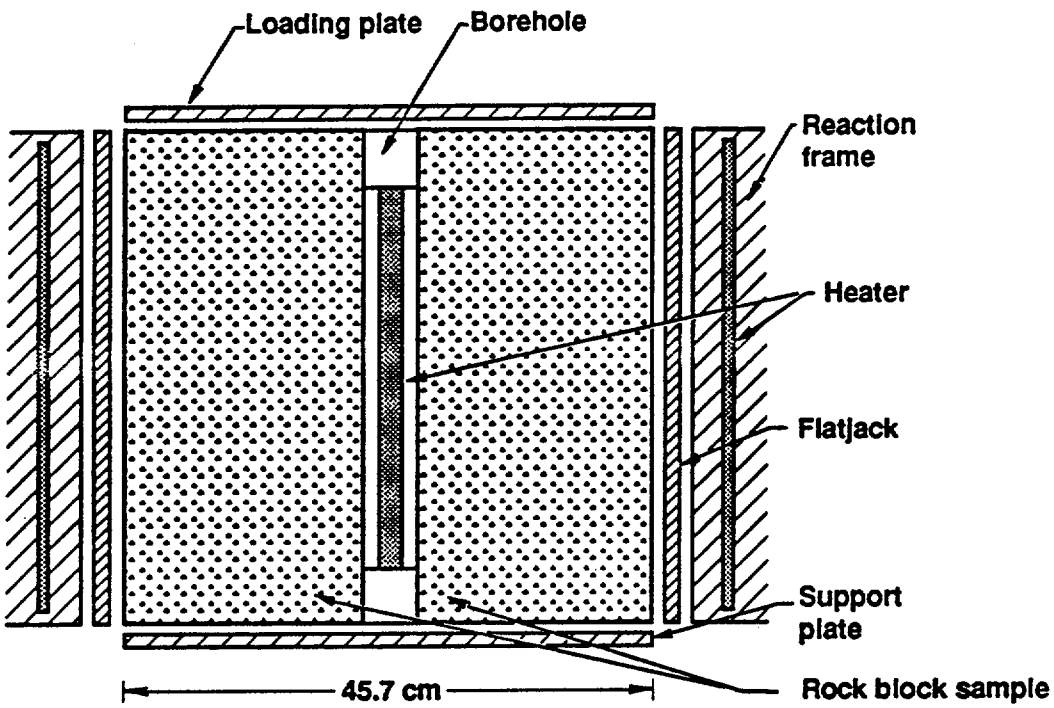

Figure 3-3. Schematic of a true triaxial block experiment.

Various parameters will be measured during the experiment, including temperature at several locations in the block, and displacement in the horizontal and vertical planes. For some experiments an appropriate pore casting material may be injected into selected portions of the borehole at a predetermined point in the stress/thermal loading path to preserve the microstructure of the rock near the borehole wall (see discussion of pore casting in the above "Hollow Cylinder Experiments" section).

The block is allowed to cool to room temperature before all stress is relieved. When the stress/thermal cycling is complete, the block is removed from the apparatus and blocks that have been injected with pore casting fluid are cut into sections for examination with a SEM or other imaging device. The microstructure will be analyzed in light of the petrographic descriptions that are available for rock from the potential repository horizon.

The fracture spacing of the rock is expected to be less than the proposed 18-in. sample dimension, and this must be taken into account when the techniques are designed for obtaining samples from the potential repository horizon. Details of how the samples may be taken are discussed briefly in Sec. 3.2.5 and will be included in the implementing procedures associated with this study plan. The maximum stress imposed on the block will be 35 MPa.

Double Torsion Experiments

For the double torsion experiment, a thin-plate-shaped rock sample is loaded on one end in four-point bending (Fig. 3-4). A crack is allowed to run down the middle of the sample in the direction perpendicular to the end loading. A groove with a depth up to 30% of the sample thickness is machined into the sample to guide the crack (Evans, 1972). To determine subcritical crack velocity as a function of the stress intensity factor, precracked samples will be prepared so that the initial crack length is in the range where the stress intensity factor is independent of crack length.

Crack velocity will be obtained from load relaxation data at fixed displacement (Williams and Evans, 1973) and from constant displacement rate experiments conducted at different rates (Evans, 1972).

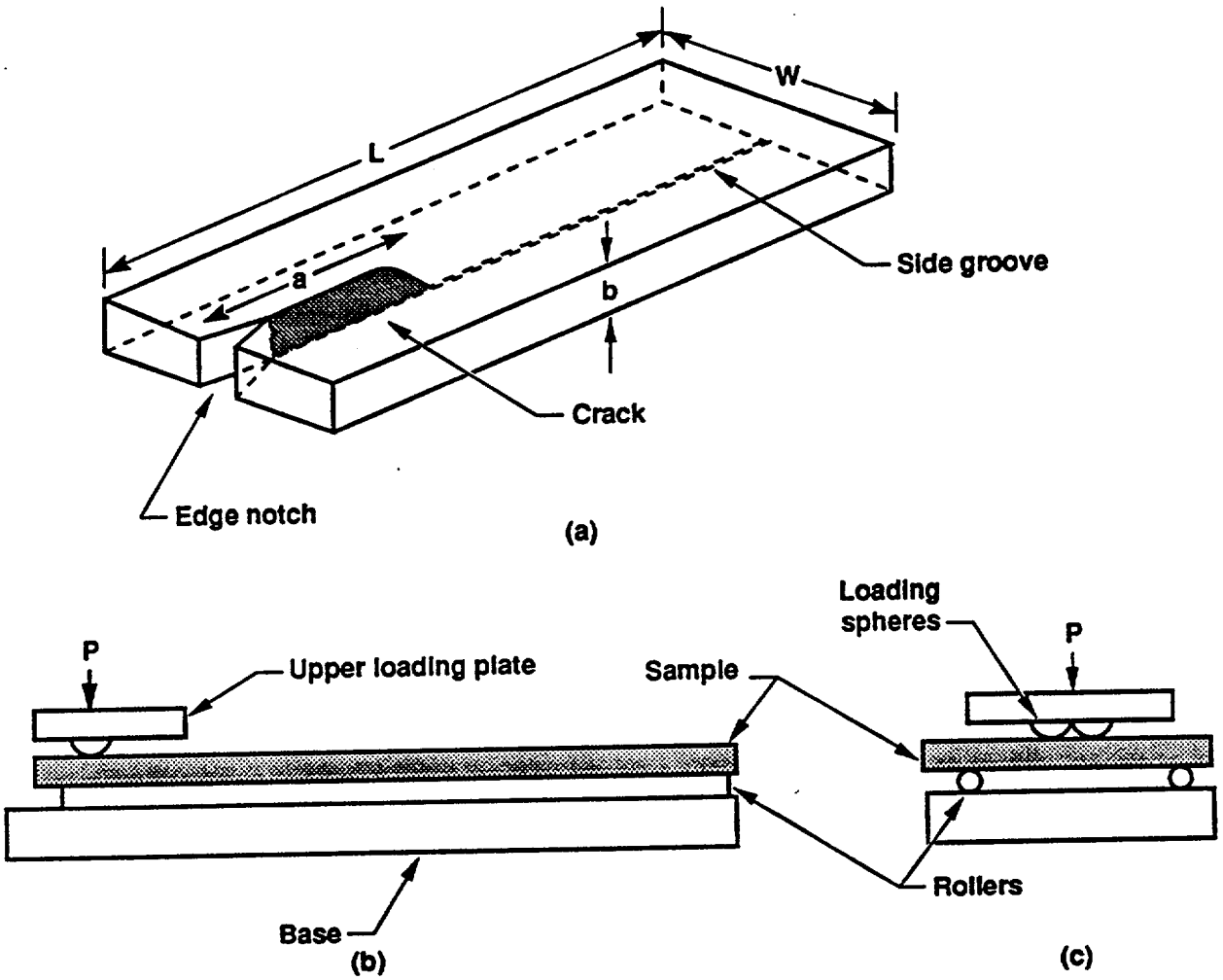

Figure 3-4. A schematic representation of the double torsion test device. (a) The test sample. (b) Side view of sample and loading apparatus (P = loading). (c) End view of the loaded sample.

Short Rod Experiments

For the short rod experiment, a chevron notch is cut into a cylindrically shaped rock sample [Fig. 3-5(a)]. A tensional force or crack opening load (P) is then applied to the mouth of the sample. As the tension is increased, a crack initiates at the point of the chevron slot and advances longitudinally in a stable manner, tending to split the sample in half [Fig. 3-5(b,c)]. If micro-cracking and plasticity effects are negligible, the opening load reaches a maximum when the crack reaches a critical location; thereafter, the crack-advancing load decreases with further crack growth.

The maximum load is linearly related to the fracture toughness using the fundamental principles of linear elastic fracture mechanics. We will compute the mode I critical stress intensity factor or fracture toughness from the measured parameters following the techniques published for the short rod geometry (e.g., Sun and Ouchterlony, 1986).

Both double torsion and short rod experiments will be done in an environmental chamber. For experiments at elevated temperatures, the heating and cooling will be carefully controlled so that thermal gradients do not introduce microcracking effects.

3.2.3 Technical Procedures

Each experiment will be broken into logical work segments to allow for orderly planning and preparation for completion of each modeling activity or experiment. Detailed planning for each segment of work will be accomplished and reflected in Individual Software Plans (ISPs) for modeling efforts and in Activity Plans for experiments. Quality assurance (QA) grading will be performed for each segment of work. Such grading will identify the scope of the applicable work and whether that specific segment of work is quality affecting or nonquality affecting (scoping activities are nonquality affecting). QA grading will identify the quality procedures and the technical implementing procedures (TIPs) applicable to the individual segments of work. QA grading will be performed sufficiently in advance of the commencement of each segment of work so that Activity Plans, ISPs, and TIPs can be prepared, reviewed, and approved, and all required training can be completed. These documents will outline the work for each type of experiment, as well as the appropriate technical and QA requirements. The appropriate procedures for all aspects of sample preparation, calibration of

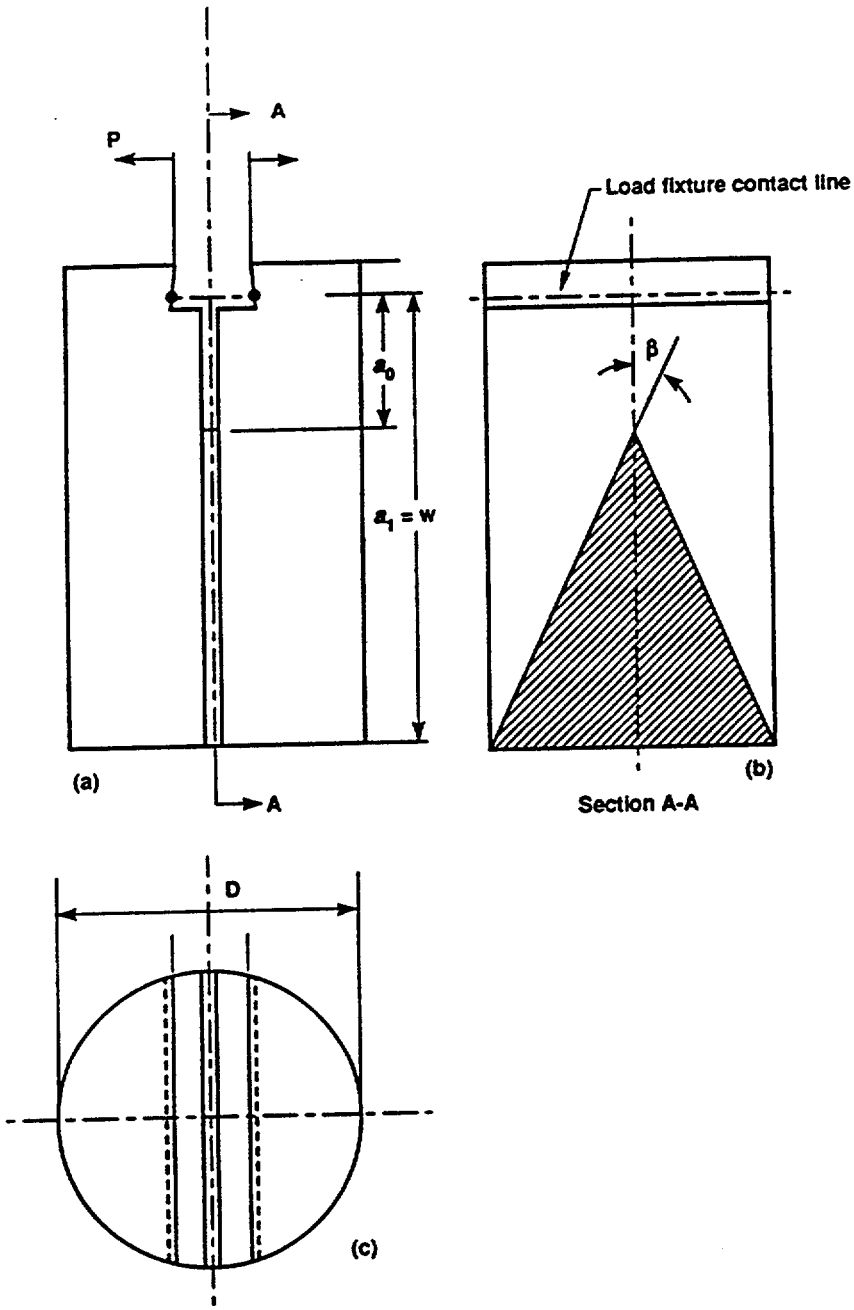

Figure 3-5. Sample geometry of a short rod sample. (a) Side view of cylindrical sample; a_0 = initial crack length (notch depth) measured from line of load application; a_1 = distance from chevron; w = sample width. (b) Cross-section of sample with the chevron load line to end of notch; β = chevron half-angle (approx. 27). (c) Top view of sample; D = diameter of sample and w/D = 1.5. Adapted from Sun and Ouchterlony (1986).

equipment, and execution of each experiment, will be listed in the TIPs for that experiment, in accordance with appropriate QA requirements. When available for a specific task, nationally recognized procedures (e.g., ASTM and ISRM procedures) will be consulted when the TIPs are developed.

3.2.4 Equipment

We will need a workstation for the modeling effort. For the hollow cylinder experiments, we will need a rock mechanics testing system that can control the confining pressure, axial load, internal pressure, pore pressure, and temperature. For the large block experiments, we will need a rock mechanics block testing system that can control the true triaxial confining pressure, in addition to heaters, thermocouples, deformation measuring equipment, and other equipment commonly used in rock mechanics studies. For both hollow cylinder and true triaxial block experiments, we will need instruments to monitor and record the pressures, temperatures, and deformations. And, the analysis will require both optical and electron microscopes or another system for imaging microstructure, such as an ion probe. Finally, we will need a computer-based digital image processing system to analyze the images of the rock's microstructure.

For the fracture mechanics experiments, we will need a load frame, a load cell, an environmental chamber and controllers, tensioning apparatus, and a transmission electron microscope.

3.2.5 Representativeness

The purpose of this activity is to determine how much spalling or breakout can be expected over time and how mechanical changes over time may affect the NFE. Experiments will be conducted in a laboratory and on a much smaller scale than for the potential repository. In addition, the potential repository horizon is expected to be fractured. Thus, our experiments will be conducted on material that can be approximated by a continuum, although the actual site is a discontinuum. We expect that this analysis may overpredict the amount of spalling that may occur because fractures in situ are compliant and may deform to accommodate thermal expansion due to heating, thereby allowing stress levels to remain low. The hollow cylinder experiments and true triaxial block experiments will provide

information on the nature and extent of the damage zone that may form around the emplacement borehole in the NFE. Although the measurements will be on a smaller scale than the actual emplacement hole, the mechanisms causing damage, and the nature and relative extent of damage observed in these experiments will aid us in anticipating damage that can be expected in situ. To assess the representativeness of these experiments, results will be compared with damage around underground openings in tuff. Particular attention will be given to underground openings in locations where emplacement of a WP has been simulated (e.g., G-Tunnel, NTS) or where other repository-related studies have been conducted (e.g., Apache Leap, AZ). In addition, as stated in Sec. 1.4, a series of field studies will be conducted under future revisions of this study plan. The hollow cylinder experiments will not incorporate the effects of fractures or moisture content, but they will provide information on the effects of mineralogy, anisotropy, and radiation; similar laboratory studies on other rock types have produced borehole breakouts similar to those observed in the field (Ewy and Cook, 1990a,b). To accelerate the rate of damage formation, the heating rates will be accelerated compared to those in the repository and the stress will be applied at a higher rate and at higher levels than in situ. Also, the stress field will be axisymmetric. While these conditions are idealizations and not exact duplicates of those in the NFE, they will provide information useful for identifying and characterizing the fundamental damage mechanisms expected to occur in the near field over time.

From the rock damage measured in the true triaxial block experiments, we will qualitatively determine the nature and extent of the damage zone that may be expected to occur around the emplacement borehole in the NFE. Although the measurements will be on a smaller scale than the actual emplacement hole, the mechanisms causing damage, and the nature and relative extent of damage observed in these experiments will aid us in anticipating damage that can be expected in situ. These measurements will be able to incorporate the effects of fractures, but will not incorporate the effects of varying moisture content. They will provide information of the effects of mineralogy, anisotropy, stress path, and heating and cooling rates. To accelerate the rate of damage formation, the heating rates will be accelerated compared to those in the repository and the stress will be applied at a higher rate and at higher levels than in situ. While these conditions are not exact

duplicates of those in the NFE, they do represent idealizations and are focused on identifying and characterizing the fundamental damage mechanisms expected to occur in the near field over time.

To reduce the deformation data from hollow cylinder and true triaxial block experiments, we will need to use elastic solutions. These solutions are limited in that they assume rock elasticity and homogeneous continuity. However, rock is not a homogeneous, elastic medium, especially at elevated temperatures and pressures. Corrections for environmental conditions will be made to elastic modulus (i.e., incorporation of a pressure-dependent elastic modulus) and to other parameters as appropriate.

One factor that may limit the representativeness of the true triaxial block experiments will be the ability to obtain "representative" sample blocks. Block specimens will be quarried from regions away from zones damaged by drift or alcove excavation. Because of the expected fracture spacing (less than the 45.7-cm sample dimension) it will be necessary to properly design the techniques for obtaining samples for these experiments. Details of how the samples will be taken will be included in the implementing procedures associated with this study plan. Several approaches are being considered. The first is to cut the block out using pieces that are formed by fractures. These pieces would then be carefully re-assembled in the laboratory. Obviously, there will be potential for small pieces to be lost and the fractures usually cannot be put together without some offsets or changes in aperture from the in-situ conditions. A second alternative is to predrill and reinforce the block before cutting it out. This may not be acceptable because the reinforcing may alter the observed mechanical properties. A version of this approach would be to place the reinforcement in the corners of an oversized block, and then restrain the block as the reinforcement was removed. Another alternative would be to excavate one side at a time and build reinforcing around the sample as the excavation proceeded. In this alternative, it would probably be appropriate to excavate an oversized sample which could be trimmed later. A variation of the latter approach would be to take the enclosed oversized sample to the laboratory and then chain saw slots for emplacement of flat jacks in directions parallel to fractures, leaving the ends which were more fractured to be loaded by pistons. The details of how the sample will be obtained will be discussed in implementing procedures based on numerical analyses of the impact of the sample procedures. If

representative blocks cannot be obtained using reasonably available techniques, these experiments will be re-evaluated.

From the parameters measured in the fracture mechanics experiments, we will characterize fracture toughness, and determine the rate of subcritical crack growth versus the stress intensity factor for the repository horizon as a function of several parameters including temperature, humidity, and radiation exposure. Experiments at the higher temperatures will provide information on how increasing temperature in the presence of water vapor may affect the the stability and growth rate of cracks. In addition, measurements at temperatures above 100°C will establish the effect of the cristobalite structural inversion, and its associated volume expansion, on fracture toughness and the velocity of subcritical crack growth. High-temperature measurements in a saturated vapor will also provide data on processes at the dry edge of the boiling region. In this region, water may exist in confined pores at this temperature if venting is restricted. Such water may interact with microcracks or flaws along the pore walls, causing crack growth.

The analysis of fracture mechanics experiments will be based on the assumption that the classical linear theory of elasticity applies in the region of the crack tip. This is valid provided that any region of nonlinear behavior is negligibly small compared with the length of the crack and the dimensions of the cracked body. However, if nonlinear effects become large, fracture mechanics can invoke alternative analyses (Rice, 1968a,b). It is important to note that the effects of environment such as temperature, moisture, and compressive stress on fracture processes are poorly understood.

3.2.6 Range of Expected Results

Hollow cylinder, true triaxial block, and fracture mechanics experiments have not been performed on tuff similar to that found in the repository horizon. The following is what we expect based on similar studies that have been done on other types of rock. We expect that for hollow cylinder and true triaxial block experiments, the stress at borehole failure will be higher than the uniaxial strength of the near-field rock, and higher than stress at failure for the waste-emplacement borehole. We also expect the strength of the cylinder wall to decrease with increasing temperature and hole size, and the damage zone (if there is one) is expected to increase in size at higher temperatures, but the magnitude of these changes is not well known.

Hollow cylinder experiments performed on other rock types indicate that failure of the borehole wall occurs when the theoretical tangential stress at the borehole wall is in the range 2 to 4 times the uniaxial strength (Ewy and Cook, 1990a; Haimson and Herrick, 1985; Santavelli and Brown, 1987; Guenot, 1987). Furthermore, Haimson and Herrick (1985) found that the ratio of calculated tangential stress of failure to uniaxial compressive strength depends on hole size (i.e., the ratio decreases as the hole size increases). Borehole closure of up to 4% of borehole volume was observed in similar experiments by Ewy and Cook (1990a,b). They found that the hole failed at strains in the range 1–2% and similar values are expected in our experiments.

For true triaxial block experiments, we expect mechanical response to be similar to that reported by Zimmerman et al. (1986a) who performed a heated block experiment in a tuff similar to the TSw2 formation in G-Tunnel at NTS and found that at stresses of ~8 MPa and thermal loading to 75°C, displacements of 0.6 mm were introduced in a 2 × 2 m block. Because the blocks used in our true triaxial block experiments will be smaller, we can consider this value upper bound for displacements. Zimmerman et al. (1986b) saw smaller displacements in small-diameter heater experiments also conducted at G-Tunnel.

We also expect that rates of subcritical crack growth may be as low as 10^{-9} m/s at a temperature of 25°C. Meredith and Atkinson (1985) have reported that for similar fracture mechanics experiments on granite and gabbro, the rate of subcritical crack growth at constant stress intensity factor increased 5–7 orders of magnitude as temperature was raised from 20 to 300°C in a humid environment (e.g., from $<10^{-7}$ to $\sim 10^{-2}$ m/s at $K_I = 1$ MPa $m^{1/2}$ for Westerly granite, where K_I is the stress intensity factor). It is expected that humidity and increased temperature will reduce fracture toughness and increase crack velocity at a given stress or stress intensity factor value. The expected range of values for each parameter will depend on the temperature and humidity of the experiments conducted.

To date, pore casting and image analysis techniques have not been applied to the analysis of damage zones in hollow cylinder or true triaxial block experiments. However, in uniaxial and modified triaxial experiments, Zheng et al. (1989) used this technique and found that the crack length distribution in deformed limestone and sandstone followed a gamma distribution with a mean crack length in the range 0.39 to 0.68 mm. The

expected range of values for this and other parameters determined in these experiments will depend on the control parameters and other factors and cannot be estimated at this time.

3.2.7 Techniques of Data Reduction and Analysis

Data for experiments planned for this activity generally will be taken digitally using up-to-date digital data acquisition techniques. Data for some parameters also may be recorded manually. Data will be reduced numerically and/or graphically as appropriate to the employed data reduction technique.

For the hollow cylinder and true triaxial block experiments, stress deformation data will be reduced numerically using elastic and/or elastoplastic solutions. Corrections for environmental conditions will be incorporated. Some graphical data reduction schemes may be used if appropriate.

Data reduction and analysis for the rock microstructural studies are discussed in Sec. 3.2.2. Data for the fracture mechanics experiments also will be reduced numerically. Initial analysis will be based on the assumption that the classical linear theory of elasticity applies at the crack tip.

Data analysis is an integral part of the modeling portion of this activity and is discussed in detail in Sec. 3.2.2.

3.3 Geomechanical Properties Analysis

3.3.1 Approach

We will perform uniaxial and triaxial experiments to determine the effect of drying/rewetting and radiation on the geomechanical properties of rock from the potential repository horizon. These experiments will be performed under varying temperature and moisture conditions and on samples with a range of lithophysal content, to simulate the expected environmental conditions in the NFE over the lifetime of the repository.

We have chosen uniaxial and triaxial strength experiments for this activity primarily because of the key role of microfractures in affecting the stress-strain behavior and strength during these experiments. Microfractures also affect the rock's fluid and thermal transport properties. Thus, if the mechanical properties are affected by drying/rewetting or exposure to

radiation, the transport properties also may be affected and further investigation should be considered.

In regards to the radiation study, the purpose of the analysis is to confirm a negative result—that radiation will not affect geomechanical properties. The approach is to make precise measurements of rock behavior in uniaxial and triaxial compression on irradiated and non-irradiated samples of rocks from the potential repository horizon. Samples are prepared and measurements are performed identically, except for the exposure to gamma radiation. Results are then compared using statistical methods.

3.3.2 Methods

The samples for the uniaxial and triaxial experiments will be taken from the repository horizon within TSw2. Standard petrographic thin sections will be prepared for several representative samples to evaluate the mineralogy effect on the experimental results. Samples for the experiments will be prepared as right circular cylinders according to the specifications listed in ASTM designation D4543-85. The samples will have a length to diameter ratio of at least 2 : 1, and samples with a 12.7-cm length (5-in.) and 5.08-cm diam (2-in.) (length to diameter = 2.5 : 1) will be used in a majority of the experiments. The porosity and density of the samples will be determined before the experiments.

The effect of the heating/cooling thermal cycle on mechanical properties will be examined by performing experiments on samples that have been thermally cycled to temperatures equal to or above those expected in the near field environment and then cooled to the desired test temperature. Samples for experiments to be performed under changing moisture conditions will be saturated following the procedures presented by Nimick et al. (1987), which also includes a detailed procedure for oven drying samples that will be tested dry, and for oven drying followed by vacuum saturation for samples that will be tested under saturated conditions. To examine the effect of radiation at elevated temperatures on the strength and elastic moduli, experiments will be conducted at temperatures that span the range expected in the NFE.

To evaluate the effect of radiation we will use a gamma-irradiation method similar to that used by Durham et al. (1986). Samples will be irradiated in a ^{60}Co irradiation pool. To compensate for the nonuniformity of gamma-ray intensity within the pool and for the slight attenuation of gamma

rays in rock, the samples will be rotated according to a preplanned schedule. Control samples will be handled in the same manner as the irradiated samples except for the irradiation process. The total dose of gamma radiation will be monitored using radiochromic film.

For the uniaxial and triaxial experiments, samples will be placed in a stiff loading frame that meets or exceeds the ASTM requirements for the apparatus (ASTM designations D2938-86, D3148-86, and D2664-86). Alternatively, a servo-controlled loading system may be used. Experiments will be conducted either in an elevated temperature enclosure or in a triaxial chamber with heaters, insulation, and temperature measuring devices that will maintain the testing temperatures. The axial load will be applied continuously, and without shock, so that the strain rate is constant and failure occurs within 5 to 15 min of the start of loading. Axial load will be measured using a load cell placed in series with the sample. The temperature changes will be imposed at carefully controlled rates. For triaxial experiments, the confining pressure is applied by slowly raising the chamber fluid pressure to a predetermined level.

The axial and radial strains/deformations of the samples in these experiments can be measured with electrical strain gages, linear variable displacement transducers (LVDTs), or other suitable transducers. At high temperatures (above ~175°C), strains/deformations have to be measured externally from the heating enclosure with suitable extensometers. Alternatively, suitable high-temperature strain gages and transducers should be developed for this purpose.

3.3.3 Technical Procedures

Each experiment will be broken into logical work segments to allow for orderly planning and preparation for completion of each experiment. Detailed planning for each segment of work will be accomplished and reflected in Activity Plans. Quality assurance (QA) grading will be performed for each segment of work. Such grading will identify the scope of the applicable work and whether that specific segment of work is quality affecting or nonquality affecting (scoping activities are nonquality affecting). QA grading will identify the quality procedures and the technical implementing procedures (TIPs) applicable to the individual segments of work. QA grading will be performed sufficiently in advance of the commencement of each

segment of work so that Activity Plans and TIPs can be prepared, reviewed, and approved, and all required training can be completed. These documents will outline the work for each type of experiment, as well as the appropriate technical and QA requirements. The listing of the appropriate procedures to be followed for all aspects of sample preparation, calibration of equipment, and execution of each experiment will be included in the TIPs for that experiment, in accordance with appropriate QA requirements. When available for a specific task, nationally recognized procedures (e.g., ASTM and ISRM) will be consulted when the TIPs are developed. The tolerance, accuracy, and precision required in these experiments will conform to those specified in the ASTM designations (Table 3-3).

3.3.4 Equipment

For the uniaxial and triaxial experiments, the following equipment is required: rock mechanics loading apparatus, furnace, and load cells; potentiometers/transducers to measure axial and radial strain; and devices to maintain moisture content (liquid/vapor) and control and monitor temperature. Also, signal conditioning and data recording equipment are needed. An irradiation facility also is required.

3.3.5 Representativeness

Results of the uniaxial and triaxial experiments will characterize the effects of radiation, temperature, pressure, and moisture content on the strength and deformability of material from the repository horizon. The extent to which this material is representative of the repository horizon cannot be established until compositional and structural variability in the repository horizon have been documented. These studies, coupled with studies of borehole damage patterns and the rate of subcritical crack growth, will provide part of the information necessary to characterize long-term geomechanical behavior of rock in the NFE.

Table 3-3. Uniaxial and triaxial experiments.

	ASTM Designation			Parameters	
Type of experiment	Sample preparation	Apparatus	Procedures	Control	Evaluated
Uniaxial strength	D4543-85	D2938-86	D2938-86	Axial load Temperature Moisture Orientation Radiation Rock mineralogy/ fabric	Load at failure Failure mode Axial strain Radial strain Anisotropy
Triaxial strength	D4543-85	D2664-86	D2664-86	Axial load Temperature Moisture Orientation Radiation Confining pressure Rock mineralogy/ fabric	Load at failure Failure mode Axial strain Radial strain Anisotropy

Sample size also must be considered and the effect of sample size on mechanical properties has been examined for samples of the TSw2 by Price (1986). In that study, ultimate strength and axial strain at failure were both found to be inversely related to sample diameter, while Young's modulus and Poisson's ratio were found to be independent of sample diameter. The size versus strength relations measured by Price will be considered in evaluation of data from this activity.

3.3.6 Range of Expected Results

Previous studies on tuff from the repository horizon indicate that uniaxial strength varies widely with a mean of 155 ± 59 MPa (DOE, 1991). The Young's modulus and Poisson's ratio also varied with values of 32.7 ± 4.6 GPa and 0.22 ± 0.03, respectively. These studies also indicate that strength decreases with increasing temperature and with saturation. However, no data has shown the conclusive effect of temperature and saturation on Young's modulus and Poisson's ratio. In general, the strength and modulus of a material increase with increasing confining pressure. Measured strengths and elastic moduli are expected to be consistent with existing data for particular stratigraphic units.

3.3.7 Techniques of Data Reduction Analysis

Data will be reduced following the procedures outlined in the appropriate ASTM designations listed in Table 3-3 for each experiment.

For the analysis of the effect of radiation, one statistical method that will be evaluated is known as blocking. A block is a unit of sample material within which the variation of some attribute is less than its variation between blocks. Treatment comparisons are then made within blocks rather than across blocks. The different blocks can be viewed as independent replications of the comparison. If the "block size" in our experiments is two, the method also is known as the method of "matched pairs." For each pair one section is exposed to a massive dose of gamma radiation while the other section acts as a control. For validity, the two sections must be treated identically in all other respects. Any radiation effect is detected by a comparison of the measured parameter between the members of a pair.

If the ultimate strengths of unirradiated "a" and "b" portions are independent (i.e., uncorrelated), then the matched pair design offers no advantage. However, if there is some correlation between members of a pair, then some reduction in variability necessarily results. At the extreme, if it could somehow be established that each member of a pair has exactly the same unirradiated values for a particular property, then exactly one sample pair would be sufficient to carry out the experiment.

The sampling size (n) is the number of matched pairs as discussed above (meaning $2n$ cores are tested). Using the student's T-test, a unique sample size n may be determined for a given statistical test. Except for the deliberate

handling of samples in matched pairs, the order of irradiation and testing of each sample will be randomized with respect to its location in the source rock.

Data for these experiments generally will be taken digitally using up-to-date digital data acquisition techniques. Data for some parameters also may be recorded manually. Data will be reduced numerically and/or graphically as appropriate to the employed data reduction technique. Methods for reduction of data from the uniaxial and triaxial experiments will use techniques given in the ASTM procedures (see Table 3-3). These include estimation of deformation moduli such as Young's Modulus and Poisson's ratio. Elastoplastic response also will be analyzed in terms of Mohr-Coulomb failure criteria and/or the nonlinear Hoek-Brown failure criteria among others. The limitations of these techniques include assumptions of homogeneous continuity, and differ negligibly from alternative methods. Also, they often are restricted to two-dimensional axisymmetric solutions. All assumptions will be examined prior to collection and analysis of data.

4.0 Application of Results

The purpose of this study is to characterize the geomechanical response of the rock in the NFE to the changing environmental conditions expected to occur over the lifetime of the repository. These findings, along with findings from other related studies, will enable us to estimate changes in the geomechanical properties of the rock near the borehole and the possibility of borehole wall failure. Determining the possibility of failure of the borehole wall is necessary because failure could result in rock-induced loading of the WP container, which could affect the container's mechanical integrity. In addition, failure of the wall could result in the creation of transport pathways for the release of radionuclides into the environment.

Information gained from this study will be used to address Design Issue 1.10 and Performance Issues 1.4 and 1.5 of the *SCP* (DOE, 1998a). In addition, information produced by this study will be used to evaluate site suitability criteria as stated in 10 CFR 960.4-2-3 (DOE, 1988b) and to answer issues raised in *NUREG*-1347, Question 17 (NRC, 1989). The information obtained from these studies will form a section of the *Near-Field Environment Report* to be issued by the YMP WP Program (Milestone M20). These applications of the information produced by this study are described more completely in Sec. 1.2 of this study plan, and the relationship of this study to resolution of Issues 1.4, 1.5, and 1.10 is shown in Fig. 1-1. Table 4-1 shows how information derived from activities described in this study plan will be used by other investigations.

Table 4-1. Application of results.

Information Need (IN), Issue, or *SCP* Section	Subject
IN 1.10.4 Issue 1.4 Issue 1.5 Issue 1.10 *SCP* 8.3.4.2.4	Block stability and borehole damage analyses and the determination of geomechanical properties will provide information on the near-field thermal and mechanical properties (e.g., borehole stability as a function of fracture characteristics, rock properties, and the thermal environment).
SCP 8.3.4.2.4.1	Estimates of changes in specific surface area in the NFE resulting from the development of microcracks over time will be used in the characterization of chemical and mineralogical changes in the postemplacement environment.
SCP 8.3.4.2.4.2	Estimates of changes in the mechanical properties of fractures and intact rock in the NFE over time will be used to estimate the permeability and hydraulic conductivity of the near-field rock over time. This information will then be used to estimate the hydrologic properties of the NFE.
SCP 8.3.5.9.4	Estimates of static- and impact-loading of the WP over time will be used as part of the input to estimate rates and mechanisms of container degradation in the repository environment for anticipated and unanticipated processes and events, and for the calculation of container failure rate as a function of time.
SCP 8.3.5.10.3.1	Estimates of static- and impact-loading of the WP over time and of the geomechanical properties of the near-field will be used to develop parameters describing scenarios for the release of radionuclides from the WP.
SCP 8.3.5.10.3.5	Estimates of the external mechanical loads and the effect of changes in geomechanical properties will be used to develop a performance assessment model for the WP.
SCP 8.3.5.10.4	Estimates of the external mechanical loads and the effect of changes in geomechanical properties will be used to determine release rates of radionuclides from the WP and EBS for anticipated and unanticipated events.

5.0 Schedule and Milestones

A tentative schedule for accomplishing the work proposed in this study plan is shown in Fig. 5-1. The schedule relates the timing of our work to two scheduled milestones of the WP Program (M10 and M20) and to the the availability of samples and data from the Exploratory Studies Facility (ESF). Milestones M10 and M20 represent delivery of the revised and final reports on the near-field environment, respectively, as shown in the *Yucca Mountain Site Characterization Project Waste Package Plan* (Harrison-Giesler et al., 1991).

The schedule for this study depends on the drilling schedule for the surface-based investigations plan, on the construction schedule for the ESF, and on funding constraints. Thus, we cannot precisely define the exact schedule because delays in the project schedule, or funding constraints, may cause some activities to be delayed or to proceed at a reduced pace.

The progress of our work will be documented in the ten reports (#1–10 on Fig. 5-1) listed under the three activities below. Note that reports 1 and 5 coincide with decision points; work on the study will be evaluated at these points based on results and changes in project needs, and, if necessary, the activities will be revised.

5.1 Block Stability Analysis

The schedule for the block stability analysis depends on when the ESF will be constructed and when the fracture mapping studies (Sec. 8.3.1.4.2.2 of the *SCP*) will be completed. Current plans are for the model development to precede the actual fracture mapping studies and fracture properties experiments. Fracture properties experiments will then begin as soon as rock samples from the potential repository horizon are available.

1 Feasibility report on modeling of block movement around boreholes.

2 Report on fracture properties of surface-based rock samples in the NFE.

3 Report on fracture properties of ESF rock samples in the NFE.

4 Report presenting the results of a block stability analysis for the NFE.

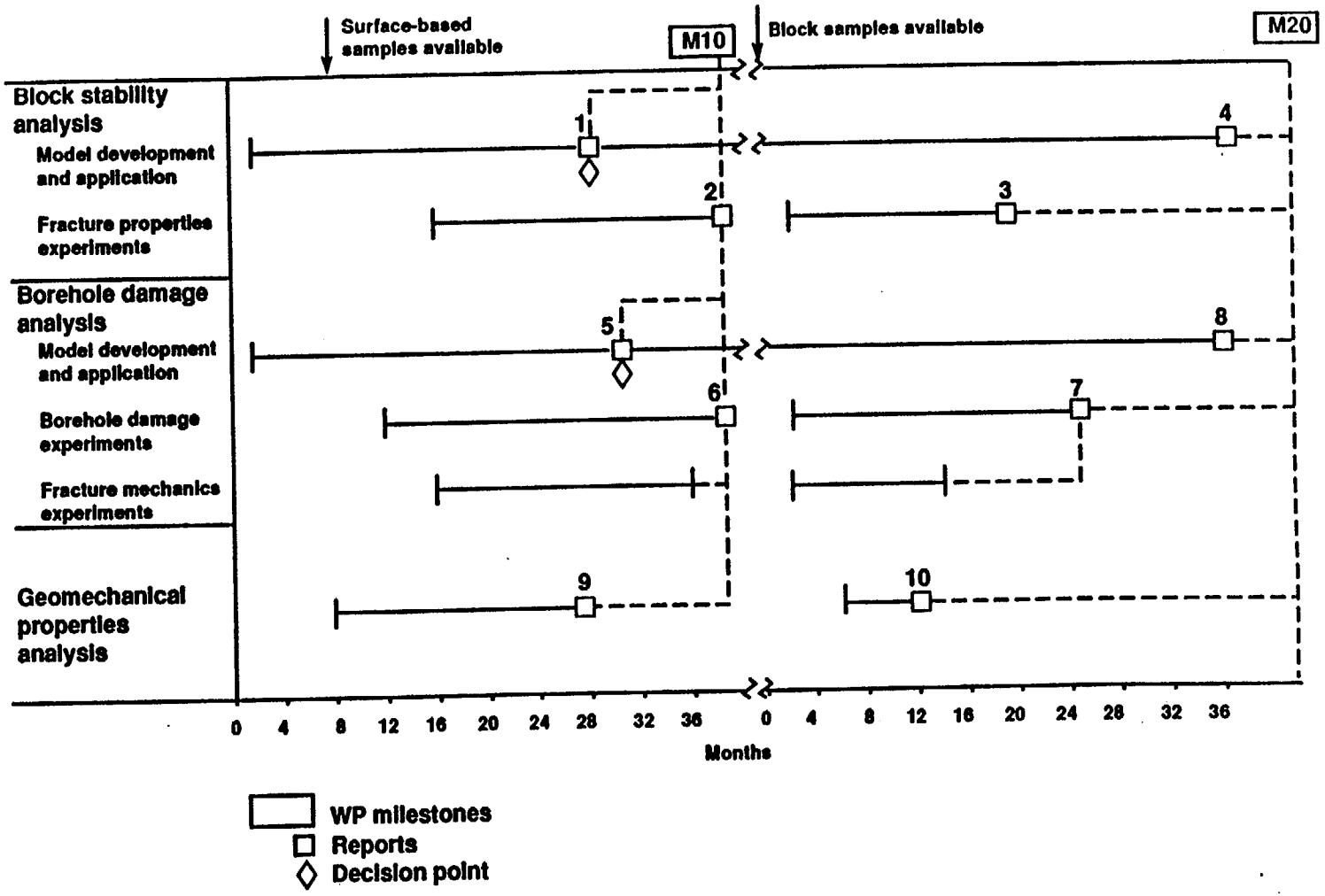

Figure 5-1. Schedule of activities.

5.2 Borehole Damage Analysis

The schedule for the borehole damage analysis depends on when surface-based rock samples and rock samples from the ESF will be available. We will devote our initial efforts to developing the modeling capability, and then we will perform fracture mechanics and hollow cylinder experiments on surface-based rock samples as they become available. We will perform true triaxial block experiments on blocks of rock as they become available from the ESF. Additional fracture mechanics and hollow cylinder experiments also will be conducted on rock samples from the ESF.

5 Feasibility report on modeling of spalling and borehole breakout at conditions appropriate to the NFE.

6 Report on results of fracture mechanics and hollow cylinder experiments on surface-based rock samples.

7 Report on results of fracture mechanics, hollow cylinder, and true triaxial experiments on rock samples from the ESF.

8 Report presenting results of a borehole damage analysis for the NFE.

5.3 Geomechanical Properties Analysis

The schedule for the geomechanical properties analysis depends on when the surface-based rock samples from the potential repository horizon and the rock samples from the ESF will be available. We will perform experiments first on surface-based samples and then, if necessary, on samples from the ESF.

9 Report on the effects of radiation and drying/rewetting on the geomechanical properties of surface-based rock samples from the potential repository horizon.

10 Summary report on the effects of radiation and drying/rewetting on the geomechanical properties of rock samples from the ESF and estimated changes of geomechanical properties of rock from the potential repository horizon resulting from storage of nuclear waste.

6.0 Acknowledgments

Dale Wilder, Ray Stout, Wunan Lin, William Glassley, and Tzou Ueng (LLNL) contributed to this document, either through direct contributions or through technical review. Pam MacGregor edited the manuscript in a careful and patient manner and her efforts are greatly appreciated. The constructive comments of several reviewers contributed substantially to this document. These individuals are A. Berusch (DOE), Ernest Linder (Battelle OWTD), Hobart Macpherson (HARZA/SAIC), V. Montenyohl (Weston/WBEC), Fran Nimick (SNL), and Charles Voss (PNL). In addition, several individuals reviewed the document and their comments and suggestions are appreciated. These individuals are J. Aldrich (LANL), Paul Cloke (SAIC), James Cunnane (Battelle OWTD), G. Fredrickson (T&MSS), Chris Fridrich (DOE/YMPO), D. Harris (USGS/USBR), Martha Mitchell (SAIC), H. S. Swolfs (USGS), Patrick Watters (Weston), and Carl Weber (Weston-QA).

7.0 References

Adams, F. D. (1912), "An Experimental Contribution to the Question of the Depth of the Zone of Flow in the Earth's Crust," *J. Geol.* **20**, 97–118.

Arulmoli, K., and C. M. St. John (1987), *Analysis of Horizontal Waste Emplacement Boreholes of a Nuclear Waste Repository in Tuff*, SAND86-7133, Sandia National Laboratories, Albuquerque, NM.

ASTM (American Society for Testing and Materials) (Philadelphia, PA). The following Standard Test Methods have been cited in the text: D2664-86, D2938-86, D3148-86, D4543-85. All are listed without dates because ASTM procedures are reviewed periodically, with some reviews resulting in rewriting of one or more of the methods. The most current version will be followed for each type of experiment.

Atkinson, B. K. (1984), "Subcritical Crack Growth in Geological Materials," *J. Geophys. Res.* **89**(B6), 4077–4114.

Atkinson, B. K., and P. G. Meredith (1987), "The Theory of Subcritical Crack Growth with Applications to Minerals and Rocks," *Fracture Mechanics of Rock*, B. K. Atkinson, Ed. (Academic Press, London).

Bak, P., and K. Chen (1991), "Self-organized Criticality," *Scientific American*, January, pp. 46–53.

Bauer, S. J., and L. S. Costin (1990), *Thermal and Mechanical Codes First Benchmark Exercise Part II: Elastic Analysis*, SAND89-0757, Sandia National Laboratories, Albuquerque, NM.

Berryman, J. G., and S. C. Blair (1986), "Use of Digital Image Analysis to Estimate Fluid Permeability of Porous Materials: Application of Two-Point Correlation Functions," *Jour. Appl. Phys.* **60**(6), pp. 1930–1938.

Blair, S. C., and J. G. Berryman (1992), "Permeability and Relative Permeability in Rocks," *Fault Mechanics and Transport Properties of Rocks, A Festschrift in Honor of W. F. Brace*, B. Evans and T.-F. Wong, Eds., (Academic Press, New York), pp. 169–186; also available as UCRL-JC-105242, Lawrence Livermore National Laboratory, Livermore, CA.

Bowker, A. H., and G. J. Lieberman (1972), *Engineering Statistics* (Prentice-Hall, Englewood Cliffs, NJ).

Brown, E. T., Ed. (1981), *Rock Characterization, Testing, and Monitoring, ISRM Suggested Methods*, published for the Commission on Testing Methods, Int. Soc. of Rock Mechanics (Pergamon Press, Oxford).

Charles, R. J. (1958), "Static Fatigue of Glass," *Jour. of Appl. Phys.* 29, 1549–1560. NNA.900216.0058

Chen, E. P. (1987), *A Computational Model for Jointed Media with Orthogonal Sets of Joints*, SAND86-1122, Sandia National Laboratories, Albuquerque, NM. NNA.891020.0180

Christianson, M. C., and B. Brady (1989), *Analysis of Alternative Waste Isolation Concepts*, NUREG/CR-5389, Office of Nuclear Material Safety and Safeguards, (U.S. Nuclear Regulatory Commission, Washington, DC). NNA.890721.0184

Cohen, L. H., and W. Klement, Jr., (1975), "Differential Thermal Analysis Investigation of the High-Low Cristobalite Inversion under Hydrostatic Pressure to 7 kbar," *Jour. Am. Cerm. Soc.* 58(5–6), 206–208. NNA.890928.0109

Costin, L. S. (1987), *Time-Dependent Deformation and Failure in Fracture Mechanics of Rock*, B. K. Atkinson, Ed., (Academic Press, London), pp. 167–215. NNA.890928.0110

Creveling, J. B., F. S. Shuri, K. M. Foster, and S. V. Mills (1984), *In Situ Stress Measurements at the Spent Fuel Test-Climax Facility*, UCRL-15628, Lawrence Livermore National Laboartory, Livermore, CA. NNA.891106.0225

DOE (U.S. Department of Energy) (1988a), *Site Characterization Plan, Yucca Mountain Site, Nevada Research and Development Area, Nevada*, DOE/RW-0199, Office of Civilian Radioactive Waste Management, Washinton, DC. HQO.881201.0002

DOE (U.S. Department of Energy) (1988b), "General Guidelines for Recommendation of Sites for Nuclear Waste Repositories," *Code of Federal Regulations, Energy*, Title 10, Part 960, (Washington, DC). (Readily available)

DOE (U.S. Department of Energy) (1991), *Reference Information Base*, Yucca Mountain Project Characterization Office, YMP/CC-0002, Version 4, Rev. 3. NNA.890330.0070

Durham, W. B., J. M. Beiriger, M. Axelrod, and S. Trettenero (1986), "The Effect of Gamma Radiation on the Strength and Elasticity of Climax Stock and Westerly Granites," *Nuclear and Chemical Waste Management* 6, 159–168. (Readily available)

Evans, A. G. (1972), "A Method of Evaluating the Time-Dependent Failure Characteristics of Brittle Materials—And Its Application to Polycrystalline Alumina," *J. Mater. Sci.* 7, 1137–1146.

Ewy, R. T., and N. G. W. Cook (1990a), "Deformation and Fracture around Cylindrical Openings in Rock—I. Observations and Analysis of Deformations," *Int. J. Rock Mech. Min. Sci. & Geomech. Abstr.* 27(5), 387–408.

Ewy, R. T., and N. G. W. Cook (1990b), "Deformation and Fracture around Cylindrical Openings in Rock—II. Initiation, Growth, and Interaction of Fractures," *Int. J. Rock Mech. Min. Sci. & Geomech. Abstr.* 27(5), 409–428.

Goodman, R. E., and G. Shi (1985), *Block Theory and Its Application to Rock Engineering*, (Prentice-Hall, Inc., Englewood Cliffs, NJ).

Guenot, A. (1987), "Stress and Rupture Conditions around Oil Wellbores (in French)," *Proc. Sixth Int. Congress on Rock Mechanics, Montreal*, (Balkema, Rotterdam), pp. 109–118.

Haimson, B. C., and C. G. Herrick (1985), "In Situ Stress Evaluation from Borehole Breakouts, Experimental Studies," *Proc. 26th U.S. Symposium on Rock Mechanics*, (Balkema, Rotterdam), pp. 1207–1218.

Harrison-Giesler, D. J., R. P. Morissett, and L. J. Jardine (1991), *Yucca Mountain Site Characterization Project Waste Package Plan*, YMP-90/62, UCRL-JC-106161, Lawrence Livermore National Laboratory, Livermore, CA.

Hart, R. D., P. A. Cundall, and J. Lemos (1988), "Formulation of a Three-Dimensional Distinct Element Model—Part II: Mechanical Calculations for Motion and Interaction of a System Composed of Many Polyhedral Blocks," *Int. J. Rock Mech. Min. Sci. & Geomech. Abstr.* 25, 117–126.

Heard, H. C., and L. Page (1982), "Elastic Moduli, Thermal Expansion and Inferred Permeability of Two Granites to 350°C and 55 Megapascals," *J. Geophys. Res.* 87(B11), 9340–9348.

Horii, H., and S. Nemat-Nasser (1985), "Compression Induced Microcrack Growth in Brittle Solids: Axial Splitting and Shear Failure," *J. Geophys. Res.* 90(4), 3105–3125.

Jaeger, J. C., and N. G. W. Cook (1976), *Fundamentals of Rock Mechanics*, (Chapman and Hall, London).

Johnson, K., C. Voss, and D. Sherwood (1989), "A Sensitivity Study of Near-field Thermomechanical Conditions in Tuff," *Focus '89 Proc.: Nuclear Waste Isolation in the Unsaturated Zone*, Las Vegas, Nevada, September 18–21.

Kana, D. D., B. H. G. Brady, B. W. Vanzant, and P. K. Nair (1989), *Critical Assessment of Seismic and Geomechanics Literature Related to a High-Level Nuclear Waste Underground Repository*, Nuclear Regulatory Commission, Center for Nuclear Waste Regulatory Analyses, San Antonio, Texas.

Keller, K., and B. P. Bonner (1985), "Automatic, Digital System for Profiling Rough Surfaces," *Rev. Sci. Instrum.* 56, 330–331. NNA.900918.0020

Kemeny, J., and N. Cook (1990), "Rock Mechanics and Crustal Stress," *Demonstration of a Risk-Based Approach to High-Level Waste Repository Evaluation*, R. K. McGuire, Ed., EPRI NP-7057, Electric Power Research Institute, Palo Alto, CA. NNA.910813.0004

Lockner, D. A., J. D. Byerlee, V. Kuksenko, A. Ponomarev, and A. Sidoria (1991), "Quasi-Static Fault Growth and Shear Fracture Energy in Granite," *Nature* 350, 39–42. (Readily available)

Meredith, P. K., and B. K. Atkinson (1985), "Fracture Toughness and Subcritical Crack Growth During High-Temperature Tensile Deformation of Westerly Granite and Black Gabbro," *Physics of the Earth and Planetary Interiors* 39, 33–51. NNA.890928.0119

Montazer, P., and W. E. Wilson (1984), *Conceptual Hydrologic Model of Flow in the Unsaturated Zone, Yucca Mountain, Nevada*, Report 84-4345, Water Resources Investigations, U.S. Geological Survey, Lakewood, CO. NNA.890327.0051

Nimick, F. B. (1990), *The Thermal Conductivity of the Topopah Spring Member at Yucca Mountain, Nevada*, SAND86-0090, Sandia National Laboratories, Albuquerque, NM. NNA.890516.0183

Nimick, F. B., R. G. Van Buskirk, A. F. McFarland (1987), *Uniaxial and Triaxial Compression Test Series on the Topopah Spring Member from USW G-2*, Yucca Mountain, Nevada, SAND85-0703, Sandia National Laboratories, Albuquerque, NM. NNA.870710.0030

NRC (National Research Council) (1990), *Rethinking High-Level Radioactive Waste Disposal. A Position Statement of the Board on Radioactive Waste Management*, Commission on Geosciences, Environment, and Resources, National Research Council, (National Academy Press, Washington, DC). NNA.901031.0087

NRC (Nuclear Regulatory Commission) (1988), "Disposal of High-Level Radioactive Wastes in Geologic Repositories; Licensing Procedures," *Code of Federal Regulations, Energy*, Title 10, Part 60, (Washington, DC).

NRC (Nuclear Regulatory Commission) (1989), *Site Characterization Analysis of the Department of Energy's Site Characterization Plan, Yucca Mountain Site, Nevada*, NUREG-1347, Division of High-Level Waste Management, Office of Nuclear Material Safety and Safeguards, (U.S.-NRC, Washington, DC).

NWPA (Nuclear Waste Policy Act of 1982) (1983), *Public Law* L97-425, 96, Stat 2201, 42, USC 10101, (Washington, DC).

Olsson, W. A. (1987), *Rock Joint Compliance Studies*, SAND86-0177, Sandia National Laboratories, Albuquerque, NM.

Olsson, W. A. (1988), *Compliance and Strength of Artificial Joints in Topopah Spring Tuff*, SAND88-0660, Sandia National Laboratories, Albuquerque, NM.

O'Neal, W. C., D. W. Gregg, J. N. Hockman, E. W. Russell, and W. Stein (1984), *Preclosure Analysis of Conceptual Waste Pakcage Designs for a Nuclear Waste Repository in Tuff*, UCRL-53595, Lawrence Livermore National Laboratory, Livermore, CA.

ONWI (Office of Nuclear Waste Isolation) (1983), *VISCOT: A Two Dimensional and Axisymmetric Nonlinear Transient Thermoviscoelastic and Thermoviscoplastic Finite Element Code for Modeling Time-Dependent Viscous Mechanical Behavior of a Rock Mass*, ONWI-437, Battelle Memorial Institute, Columbus, OH. NNA 890327-0043

Ortiz, T. S., R. L. Williams, F. B. Nimick, B. C. Whittet, and D. L. South (1985), *A Three-Dimensional Model of Reference Thermal/Mechanical and Hydrologic Stratigraphy at Yucca Mountain, Southern Nevada*, SAND84-1076, Sandia National Laboratories, Albuquerque, NM.

Pittman, E. D., and R. W. Duschatko (1970), "Use of Pore Casts and Scanning Electron Microscope to Study Pore Geometry," *Jour. Sed. Pet.* 40(4), pp. 1153–1157.

Price, R. H. (1983), *Analysis of Rock Mechanics Properties of Volcanic Tuff Units from Yucca Mountain, Nevada Test Site*, SAND82-1315, Sandia National Laboratories, Albuquerque, NM.

Price, R. H. (1986), *Effects of Sample Size on the Mechanical Behavior of Topopah Spring Tuff*, SAND85-0709, Sandia National Laboratories, Albuquerque, NM. NNA.891106.0125

Price, R. H., F. B. Nimick, J. R. Connolly, K. Keil, B. M. Schwartz, and S. J. Spence (1985), *Preliminary Characterization of the Petrologic Bulk and Mechanical Properties of a Lithophysal Zone within the Topopah Spring Member of the Paintbrush Tuff*, SAND84-0860, Sandia National Laboratories, Albuquerque, NM. NNA.870406.0156

Price, R. H., J. R. Connolly, and K. Keil (1987), *Petrologic and Mechanical Properties of Outcrop Samples of the Welded, Devitrified Topopah Spring Member of the Paintbrush Tuff*, SAND86-1131, Sandia National Laboratories, Albuquerque, NM. NNA.870601.0013

Rice, J. R. (1968a), in *Fracture*, vol. 2, H. Lebowitz, Ed., (Academic Press, New York), pp. 191–311. (Readily available)

Rice, J. R. (1968b), *J. Appl. Mech.* 35, 379–386. (Readily available)

Santavelli, F. J., and E. T. Brown (1987), "Performance of Deep Wellbores in Rock with Confining Pressure-dependent Elastic Modulus," *Proc. Sixth Int. Congress on Rock Mechanics, Montreal*, (Balkema, Rotterdam), pp. 1217–1222. (Readily available)

Schwartz, B. M. (1990), *SNL Yucca Mountain Project Data Report: Density and Porosity Data for Tuffs From the Unsaturated Zone at Yucca Mountain, Nevada*, SAND88-0811, Sandia National Laboratories, Albuquerque, NM. NNA.900108.0028

Scott, R. B., and M. Catellanos (1984), *Stratigraphic and Structural Relations of Volcanic Rocks in Drill Holes USW GU-3 and USW G-3, Yucca Mountain, Nye County, Nevada*, Open-File Report 84-491, U.S. Geological Survey, Denver, CO. NNA.870519.0095

Shi, G., and R. E. Goodman (1988), "Discontinuous Deformation Analysis—A New Method for Computing Stress, Strain and Sliding of the Block Systems," in *Proc. 29th U.S. Symposium on Rock Mechanics*, Minneapolis, MN, (Balkema, Rotterdam). (Readily available)

Springer, J. E., R. K. Thorpe, and H. L. McKague (1986), *Borehole Elongation and Its Relation to Tectonic Stress at the Nevada Test Site*, UCRL-94156, Lawrence Livermore National Laboratory, Livermore, CA.

Starfield, A. M., and P. A. Cundall (1988), "Towards a Methodology for Rock Mechanics Modelling," *Int. J. Rock Mech. Min. Sci. & Geomech. Abstr.* 25(3), 99–106. NNA.900122.0019

Sun, Z., and F. Ouchterlony (1986), "Fracture Toughness of Stripa Granite Cores," *Int. J. Rock Mech. Min. Sci. & Geomech. Abstr.* **23**(6), 399–409. (Readily available)

Tapponnier, P., and W. F. Brace (1976), "Development of Stress-Induced Microcracks in Westerly Granite," *Int. J. Rock Mech. Min. Sci.* **13**, 103–112. (Readily available)

Vardoulakis, I., J. Sulem, A. Guenot (1988), "Borehole Instabilities as Bifurcation Phenomena," *Int. J. Rock Mech. Min. Sci. & Geomech. Abstr.* **25**(3), 159–170. (Readily available)

Wilder, D. G. (1979), *Influence of Jointing on Stress and Strain Response During Underground Excavation for Test Storage of Spent Reactor Fuel,* UCRL-82742, Lawrence Livermore National Laboratory, Livermore, CA. NNA.890928.0122

Williams, D. P., and A. G. Evans (1973), "A Simple Method for Studying Slow Crack Growth," *J. Test. Eval.* **1**, 264–270. NNA.890928.0123

Yow, J. L., and R. E. Goodman (1987), "A Ground Reaction Curve Based upon Block Theory," *Rock Mechanics and Rock Engineering* **20**, 167–190. NNA.890928.0124

Zheng, Z., N. G. W. Cook, and L. R. Myer (1989), "Stress Induced Microcrack Geometry at Failure in Unconfined and Confined Axial Compressive Tests," *Proc. of the 30th U.S. Symposium on Rock Mechanics,* Morgantown, WV, A. Wahab Khair, Ed., (A. A. Balkema/Rotterdam/Brookfield), pp. 749–756.

Zimmerman, R. M., M. L. Blandford, J. F. Holland, R. L. Schuch, and W. H. Barrett (1986a), *Final Report G-Tunnel Small-Diameter Heater Experiments,* SAND84-2621, Sandia National Laboratories, Albuquerque, NM.

Zimmerman, R. M., R. L. Schuch, D. S. Mason, M. L. Wilson, M. E. Hall, M. P. Board, R. P. Bellman, and M. L. Blanford (1986b), *Final Report: G-Tunnel Heated Block Experiment,* SAND84-2620, Sandia National Laboratories, Albuquerque, NM.

The following is for Office of Civilian Radioactive Waste Management Records Management purposes only and should not be used when ordering this document:

Accession number: NNA.921124.0025