INSERVICE INSPECTION REPORT

REFUELING 16

INTERVAL 3
PERIOD 1
OUTAGE 2

J.M. FARLEY UNIT 1
NUCLEAR GENERATING PLANT
COLUMBIA, ALABAMA 36319

Southern Nuclear Operating
Company
40 Inverness Parkway
Birmingham, Alabama 35242

J. M. FARLEY NUCLEAR PLANT
UNIT 1
INTERVAL 3 PERIOD 1 OUTAGE 2

SAFETY INJECTION PIPING EXAMINATION

During the RF 16 outage, a volumetric and surface examination was performed on weld ALA1-4304-7 in response to NRC Information Notice 97-19. The IN was issued as a result of a crack discovered in a Safety Injection line at Sequoyah Unit 2 during the performance of Inservice Inspection examinations. The cause of the crack was determined to be IGSCC, but was located in a similar area as cracking caused by thermal cycling, as identified in NRC Bulletin 88-08. It was determined that ALA1-4304-7 was not in the examination scope for meeting the requirements of the NRC bulletin and examinations were performed in response to the IN. No indications were identified in either the volumetric or surface examinations performed and results are located behind Tab 1.4.

CLASS 1 SYSTEM LEAKAGE TEST

The VT-2 data sheets for the Class 1 system leakage test performed at the end of the refueling outage in accordance with IWB-5210(a)(1) are included behind Tab 1.7. Data sheets are also included for the Class 1 bolting examinations performed as part of the Class 1 pressure test.

CONTROL ROD DRIVE MECHANISM VISUAL EXAMINATION

In response to industry concerns over a leaking weld on a part length CRDM noted at Prairie Island Nuclear plant, a visual examination of the five (5) Unit 1 part length CRDM's was performed during the Unit 1 RF 15 outage. The results of the visual examination were satisfactory with no indication of leakage or boron buildup noted. An unidentified material was noted on CRDM's 24 and 63. Samples that were taken were analyzed and found not to contain boric acid. A visual examination was again performed of CRDM 24 to verify the condition observed had not changed. No evidence of leakage or boric acid residue was observed.

MAIN STEAM AND MAIN FEEDWATER HANGER EXAMINATIONS

A walkdown of the Main Steam and Main Feedwater hangers on the lines from the Turbine Building to the Steam Generators was completed during the outage. The purpose was to identify any deformation of the piping supports that may have occurred. The initial examinations were completed satisfactorily with no indication of damage found. Near the end of the RF 15 outage it was noted that Main Steam hanger MS3-R4, on sketch ALA2-4100, had a cracked weld. A design change was implemented which modified the hanger and performed the repair. The hanger was inspected again during RF 16 and no indications of damage were found. Visual examination data is located behind Tab 2.3.

STEAM GENERATOR REPLACEMENT PRE-SERVICE EXAMINATIONS

The three Steam Generators for FNP Unit 1 were replaced during the RF 16 outage. Pre-service examinations for the Steam Generator welds and the Eddy-Current examinations for the tubes was performed at the production facility in Spain. This examination data is filed in the FNP Document Control in the Purchase Order documentation package. The FNP R-type (record type) for the package is C1.01. Additionally it is cross-referenced to CD-ROM disks containing the UT mechanized data (R-type R01.600) and the Eddy-Current data (R-type R01.570).

The Pre-service examination for the connection welds for the RCS, Main Steam and Main Feedwater piping is located behind Tab E.

PART LENGTH CRDM VISUAL EXAMINATION

FIGURE 1

SUPPORT EXAMINATION RECORD VT-3

FARLEY NUCLEAR PLANT

SOUTHERN NUCLEAR OPERATING COMPANY

Plant/Unit	Line Number/Examination Area/Weld No.	Drawing Number	Sheet No.
Farley 1	CRDM #24 Partial Length	N/A	N/A

Photos	Sketch	Resolution	Technique
X Yes X B&W	___ Yes	X 1/32" Division (Scale)	X Direct
___ No ___ Color	X No	___ 1/32" Line (Gray Card)	___ Video
			___ Remote

WO/WA	98008047
Procedure No.	FNP-0-NDE-100.23
Revision No.	3
Examiner/Initial Sig.	Daniel Hofstra
Level	III
Examiner/Initial Sig.	N/A
Level	N/A
Date (Month-Day-Year)	3-13-2000

Equipment	Lighting	Tools		
___ Mirror	___ Ambient	___ Scale	___ Depth Gauge	___ Level
___ Magnifier	___ Flashlight	___ Micrometer	___ Comparator	___
___ CCTV	___ Droplight	___ Caliper	___ Weld Gauge	___

___ SNUBBERS VT-3	SAT	UN-SAT	N/A
Loose Bolt or Pin Connections	___	___	___
Shaft Seal	___	___	___
Fluid Leakage	___	___	___
Fluid Tubing Condition	___	___	___
Shaft Cleanliness	___	___	___
Spherical Bearings	___	___	___
Cotter & Clevis Pins Intact	___	___	___
Other**	___	___	___

* Provide details on unsat areas by use of supplemental data sheet.

** Provide details on other areas examined.

X COMP. INTERNALS & MAT'L SURFACE VT-3	SAT	UN-SAT	N/A
Pitting	X	___	___
Corrosion	X	___	___
Erosion	X	___	___
Foreign Material	X	___	___
Gouged Parts	X	___	___
Wear	X	___	___
Evidence of Leakage	X	___	___
Other Cracks**	___	___	___

___ HANGER & SUPPORTS VT-3	SAT	UN-SAT	N/A
Setting:	___	___	___
Hot ___ Cold ___	___	___	___
Misalignment	___	___	___
Damaged Members	___	___	___
Gouges	___	___	___
Arc Strikes	___	___	___
Grind Marks	___	___	___
Freedom of Movement	___	___	___
Other**	___	___	___

Comments Examination looking for signs of Boron, NONE OBSERVED. Photo Attached

SGR PRESERVICE EXAMINATIONS

SHARED

FARLEY NUCLEAR PLANT
Ultrasonic Calibration and Examination Record

FNP-0-NDE-100.31
Southern Nuclear Operating Company

Unit	Sketch/Component No.	Date	Sheet No.
1	ALA2-4150-21R	5/6/00	S00F1U274

Page 1 of 3

Procedure/Rev./TCN	Couplant/Batch No.	Thermometer SN/Cal Due Date	Linearity Sheet No.
FNP-0-NDE-100.31 / 7 / N/A	ULTRAGEL II / 00125	38193 / 8/27/2000	S00F1L019

Instrument			Search Unit		Calibration Block	
Instrument	PANAMETRICS		Transducer Mfg.	KBA	Cal. Blk. No.	ALA-25
Serial No.	91060212		Serial No.	41016	Thickness	.750"
	Ax. dB	Circ. dB	Size	.50	Cal. Temp.	75
Ref.	29	33.1	Frequency/Mode	2.25 / S	Cal. In	2000
Scan	35	39.1	"A" Dimension	.35	Cal. Chk.	2137
Reject	0		Nominal Angle	45	Cal. Out	2338
Frequency	2.25		Measured Angle	45	Ref. Blk. No.	86-4333
Mode	PE		Cable Type	RG-174	Reflector	SDH@35 db
Damping	50		Cable Length	6'	Amplitude/Sweep	36%/2.7 div.

Axial Scan Calibration				Circ. Scan Calibration			
Cal. Refl.	Signal Amp.	Sweep Div.	Wmax	Cal. Refl.	Signal Amp.	Sweep Div.	Wmax
1T	80	3.0	.7	1T	80	4.0	.8
2T	45	6.0	1.45	2T	60	8.0	1.6
3T	30	9.0	2.2				

Calibration Remarks:

0° MSEB 4mHz Serial No. 06605 used for lamination Scan.

Comp. Temp.: 83 °F Configuration: ELBOW TO REDUCER Wo Location V-STAMP Lo Location TDC

Scan Dir.	Results NI	NRI	RI	Ind. No.	% DAC	Length L1	Lmax	L2	Reference Measurement W1	Wmax	W2	Sweep Position S1	Smax	S2	Thickness 1"<--	C/L	-->1"	Notes:
5			●	1	65	42.5"	4.3"	6.0"		1.0"			1.37"					Intermittent 360
2			●	2	50	37"	41.2"	43.5"		.75"			1.37"					
2			●	3	35	29"	31"	32"		.75"			1.37"					
2			●	4	50	24.75"	25"	25.25"		.75			1.37"					

Examination/Limitation Remarks: LAM SCAN PERFORMED IN BASE MATERIAL OF INTEREST PRIOR TO ANGLE BEAM EXAMINATION. LAM SCAN AMPLITUDE MAINTAIN 50 TO 80 PERCENT OF FULL SCREEN HEIGHT.

See JER-14

Total Length of Weld	Crown Width	Total Length of Weld Examined	Extent of Perpendicular Scans (W)	Extent of Parallel Scans (L)
44"	1.1"	5 (L) 44" 2 (L) 44" 7 & 8 (W) 44"	5 - from NL to NL 2 - from NL to NL	From (5) NL to (2) NL

Primary Examiner		Level	Assistant Examiner		Level	Non-Technical Review	Date
GARY A. LOFTHUS	Dal	III	J. ERIC AYCOCK	J. Eric Aycock	III	Gary A. Lofthus	5-7-00

SNC NDE Level II/III Review	Date	Percentage of Code Coverage	ANII Review	Date
J. Eric Aycock L-III	5-7-00	100 %	C G Wood	5/12/00

Figure 1

Revision 7

FARLEY NUCLEAR PLANT
Ultrasonic Examination Continuation Record

FNP-0-NDE-100.31
Southern Nuclear Operating Company

Unit	Sketch/Component No.	Date	Sheet No.
1	ALA2-4150-21R	5/6/00	S00F1U274

Page 2 of 3

Procedure/Rev./TCN: FNP-0-NDE-100.31 / 7 / N/A

Appendix III Exams. D1 = N/A D2 = N/A Measured Angle = 45 °

Configuration: ELBOW TO REDUCER

Scan Dir.	Crown Width	Results NI	Results NRI	Results RI	Ref No	% DAC	Length L1	Length Lmax	Length L2	Reference Measurement W1	Reference Measurement Wmax	Reference Measurement W2	Sweep Position S1	Sweep Position Smax	Sweep Position S2	Thickness 1"<--	Thickness C/L	Thickness -->1"	Notes:
7		●		N/A															Results: NRI Hal
8		●		N/A															Results: NRI 5-6-00

Examination/Limitation Remarks: **LAM SCAN PERFORMED IN BASE MATERIAL OF INTEREST PRIOR TO ANGLE BEAM EXAMINATION. LAM SCAN AMPLITUDE MAINTAIN 50 TO 80 PERCENT OF FULL SCREEN HEIGHT.**

Total Length of Weld	Crown Width	Total Length of Weld Examined	Extent of Perpendicular Scans (W)	Extent of Parallel Scans (L)
44"	1.1"	5 (L) 44" 2 (L) 44" 7 & 8 (W) 44"	5 - from NL to NL 2 - from NL to NL	From (5) NL to (2) NL

Primary Examiner	Level	Assistant Examiner	Level	Non-Technical Review	Date
GARY A. LOFTHUS Hal	III	J. ERIC AYCOCK J. Eric Aycock	III	Gary A. Lofthus	5-7-00

SNC NDE Level II/III Review	Date	Percentage of Code Coverage	ANII Review	Date
J. Eric Aycock	5-16-00	100 %	[illegible]	5/16/00

Figure 1

Revision 7

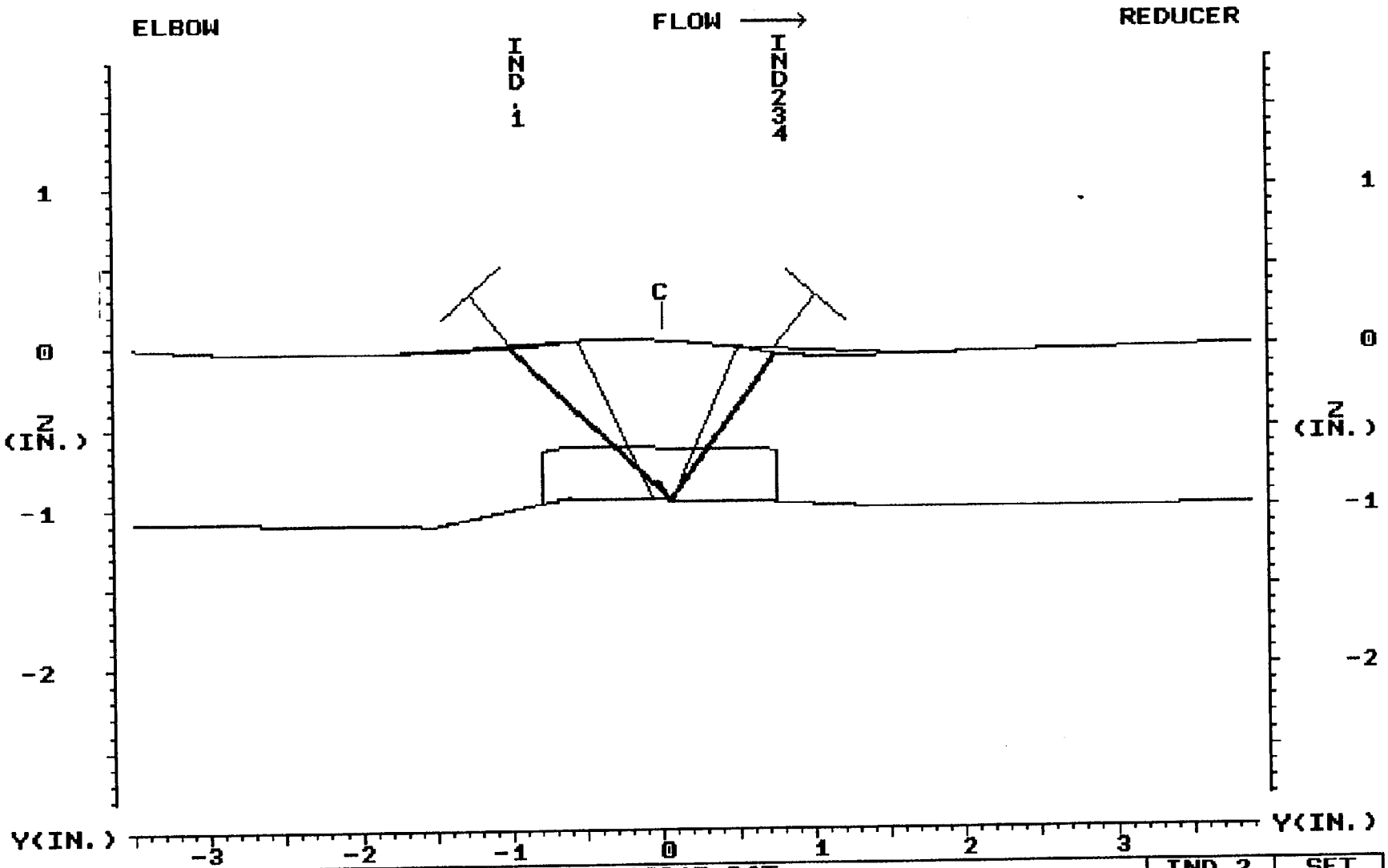

1	SET	1R1621R.DAT						IND.2	SET
0.97	DEP							0.97	DEP
1.37	MP	INDICATION 1,2,3,4 ALL EVALUATED AS ID ROOT GEOMETRY						1.37	MP
29.89	TOF							29.89	TOF
	ARC								ARC
	GATE						JEA 5-7-00		GATE
0.010	STEP							0.010	STEP
	EXIT	MAKERAY	UTILITY	LEFT	RIGHT	TOP	PRINT	EXIT	EXIT

PLANT: PLANT FARLEY UNIT 1 5/6/00 CIRC. POS.: 90 DEGREES
SYSTEM: FEEDWATER SG 'A' 23:36 ANALYST: J. ERIC AYCOCK L/III
COMPONENT: AL A2-4150-21R CAL. SHEET: S00F1U274

Sheet 3 of 3

Ultrasonic Thickness and Contour Examination Record — **Southern Nuclear Operating Company**

Unit	Weld Number	Sheet No.	Date
1	ALA2-4150-21R	S00F1U280 1 of 2	5/6/00

Drawing Number	Couplant/Batch Number	Instrument Manufacturer
ALA2-4150	ULTRAGEL II / 00125	PANAMETRICS

Material Type	Calibration Standard/ Serial No.	Model Number	Serial Number
☒ C/S ☐ S/S Other	CS STEP / 86-4257	EPOCH II	91060212

Examiner	SNT Level	Transducer Manufacturer	Type	Size
GARY A. LOFTHUS Hal	III	KBA	MSEB	3.5X10MM

Examiner	SNT Level	Serial Number	Frequency
J. ERIC AYCOCK J. Eric Aycock	III	06605	4 MHz

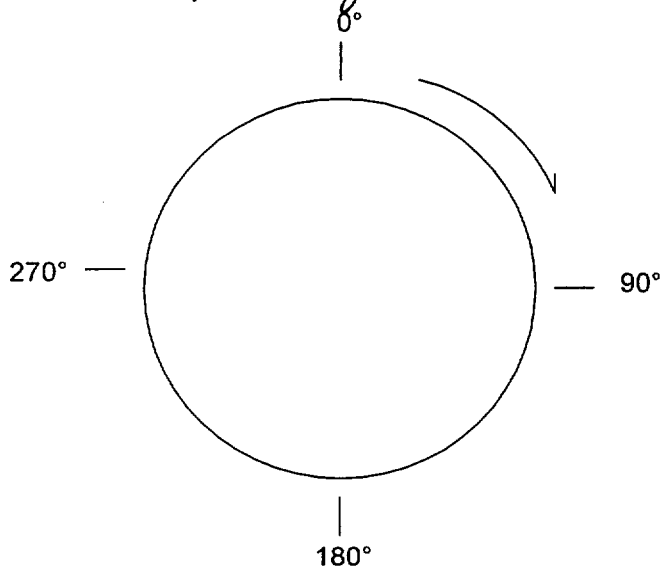

Location	0°	90 °	180°	270°
A	0.942"	1.013"	1.042"	0.964"
B	0.947"	0.940"	1.032"	0.956"
C	1.042"	0.964"	0.973"	0.952"
D	0.981"	0.964"	0.960"	0.986"
E	1.088"	1.083"	1.117"	1.189"

(thicker ⟶)

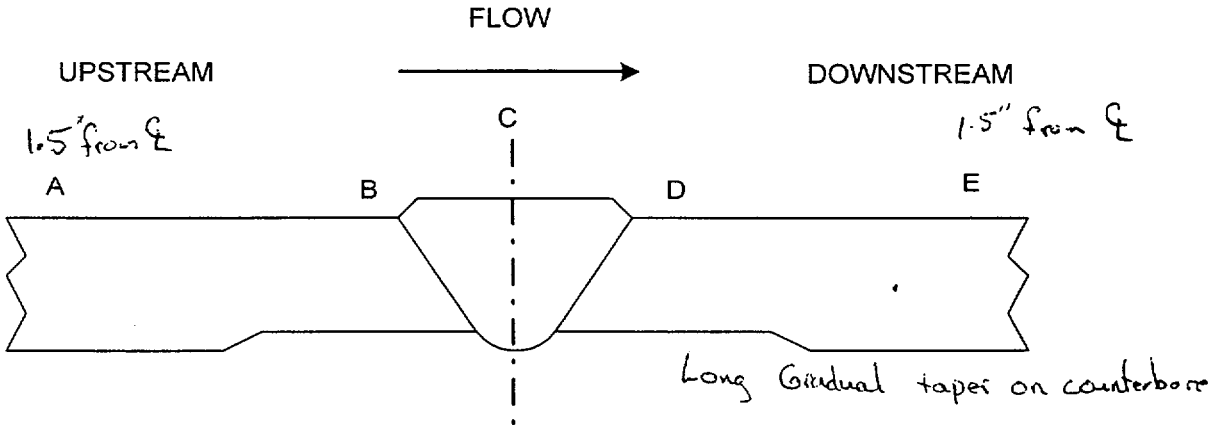

COUNTERBORE

Elbow — UPSTREAM

Reducer — DOWNSTREAM

REMARKS:

See Sheet 2 for Weld Profiles.

E Level II/III Review	Level	Date	Non-Technical Review	Date
J. Eric Aycock	III	5-7-00	Henry H. Lofthus	5-7-00

ALA2-4150-21R

0°

c/L

RED

ELBOW

c/L

RED.

ELBOW

90°

RED.

c/L

ELBOW

180°

c/L

ELBOW

RED.

270°

BECHTEL

WPIR #	NONDESTRUCTIVE EXAMINATION REPORT MAGNETIC PARTICLE EXAMINATION		REPORT #
P-FWA-005			MT-00-113
JOB # 23734	JOB NAME FARLEY UNIT 1 SGR	SURFACE CONDITION ☒ GROUND ☐ AS WELDED	DATE 5/6/00
ISO / DWG # FSK-M-012	ITEM / COMP ID Feedwater	TIME OF EXAM ☐ N/A ☐ PRE-PWHT ☒ POST-PWHT	COMPONENT TEMP Ambient
CODE / WELD CLASS ASME XI CL 2	COMPONENT CONFIGURATION Elbow to Reducer	MATL TYPE ☒ CARBON STEEL	PROCEDURE & REVISION MT-ASME III / XI REV. 2

EQUIPMENT ☒ YOKE ☒ AC
☒ CALIBRATION VERIFIED DA400/SN 10004
☐ 10 LBS cal. due 8/17/00

EXAM MEDIUM ☒ DRY ☒ VISIBLE
MFR MAGNAFLUX DESIG/COLOR 8A-RED BATCH 99H114

INDICATION CODE: NI=NO INDICATIONS NRI=NO RECORDABLE INDICATIONS C=CRACK
ROUND=ROUNDED INDICATION LINEAR=LINEAR INDICATION

PART OR WELD #	ACC (√)	REJ (√)	IND CODE	REMARKS
FW19C1SG	✓		NI	None

SKETCH / COMMENTS

Lift Plate # 1058

FNP ISI # ALA2-4150-21R

M&TE NO. N/A

CAL. DUE DATE: N/A

EXAMINER	LEVEL	DATE
Wade A. Selby	II	5/6/00
REVIEW		**DATE**
Tony R Marette	Lv III	5/6/00
Daniel P. Lipka		5-7-00

ANII REVIEW: C G Ward 5/12/00

SHARED

FARLEY NUCLEAR PLANT
Ultrasonic Calibration and Examination Record

FNP-0-NDE-100.31
Southern Nuclear Operating Company

Unit	Sketch/Component No.	Date	Sheet No.	Page
1	ALA2-4150-22R	5/6/00	S00F1U276	1 of 3

Procedure/Rev./TCN	Couplant/Batch No.	Thermometer SN/Cal Due Date	Linearity Sheet No.
FNP-0-NDE-100.31 / 7 / N/A	ULTRAGEL II / 00125	38193 / 8/27/2000	S00F1L019

Instrument		Search Unit		Calibration Block	
Instrument	PANAMETRICS	Transducer Mfg.	KBA	Cal. Blk. No.	ALA-51
Serial No.	91060212	Serial No.	41016	Thickness	.79"
	Ax. dB / Circ. dB	Size	.50	Cal. Temp.	75
Ref.	27.1 / 32.1	Frequency/Mode	2.25 / S	Cal. In	1945
Scan	33.1 / 38.1	"A" Dimension	.35	Cal. Chk.	2220
Reject	0	Nominal Angle	45	Cal. Out	2336
Frequency	2.25	Measured Angle	45	Ref. Blk. No.	86-4333
Mode	PE	Cable Type	RG-174	Reflector	SDH@35 db
Damping	HI/400	Cable Length	6'	Amplitude/Sweep	36%/2.8

Axial Scan Calibration				Circ. Scan Calibration			
Cal. Refl.	Signal Amp.	Sweep Div.	Wmax	Cal. Refl.	Signal Amp.	Sweep Div.	Wmax
1T	80	3.0	0.8	1T	80	4.0	0.8
2T	65	6.0	1.5	2T	60	8.0	1.6
3T	40	9.0	2.3				

Calibration Remarks:
Ax. Cal. stored in location A0.
Circ. Cal. stored in location A1.
0 deg. Cal. stored in location B0.
0° MSEB Serial No. 06605 used for lamination scan.

Comp. Temp.: 83 °F Configuration: REDUCER TO NOZZLE Wo Location V-STAMP Lo Location TDC

Scan Dir.	Results NI	NRI	RI	Ind. No.	% DAC	Length L1	Lmax	L2	Reference Measurement W1	Wmax	W2	Sweep Position S1	Smax	S2	Thickness 1"<--	C/L	--->1"	Notes:
2			●	1	25	31.4"	31.5"	31.6"	*	.85"	*	*	1.1"	*				*Spot ind. Butted at toe
5			●	2	35	2.9"	13"	17"	.55"	.7"	.9"	1.1"	1.21"	1.32"				Riding on toe / intermittent
7		●		N/A														Low level root/ verified by RT 15% DAC
8		●		N/A														

Examination/Limitation Remarks: LAM SCAN PERFORMED IN BASE MATERIAL OF INTEREST PRIOR TO ANGLE BEAM EXAMINATION. LAM SCAN AMPLITUDE MAINTAIN 50 TO 80 PERCENT OF FULL SCREEN HEIGHT.

See IEL-15

Total Length of Weld	Crown Width	Total Length of Weld Examined	Extent of Perpendicular Scans (W)	Extent of Parallel Scans (L)
50.25"	1.25"	5 (L) 50.25 2 (L) 50.25 7 & 8 (W) 50.25	5 - from NL to NL 2 - from NL to NL	From (5) NL to (2) NL

Primary Examiner	Level	Assistant Examiner	Level	Non-Technical Review	Date
GARY A. LOFTHUS	III	J. ERIC AYCOCK	III		5-7-00

SNC NDE Level II/III Review	Date	Percentage of Code Coverage	ANII Review	Date
III	5-7-00	100 %		5/12/00

Figure 1

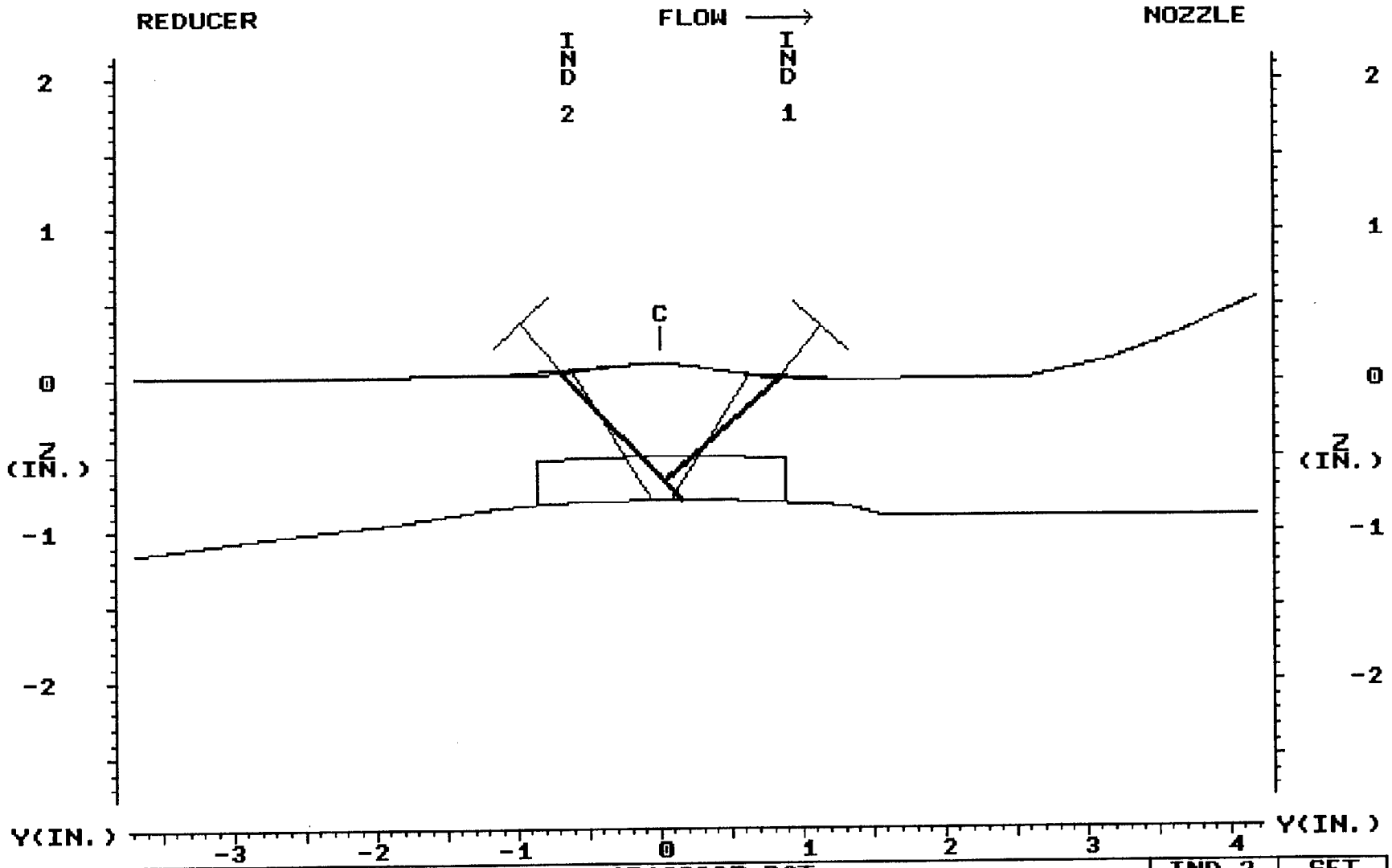

IND 1		1R16022R.DAT						IND 2	
0.78	SET							0.86	SET
1.10	DEP							1.21	DEP
25.55	MP	INDICATION 1 - CODE ACCEPTABLE SLAG CONFIRMED ON RT						27.37	MP
	TOF	FILM. SEE ATTACHED SHEET FOR TABLE CALCULATION.							TOF
	ARC								ARC
	GATE	INDICATION 2 - ROOT GEOMETRY							GATE
0.025	STEP							0.010	STEP
	EXIT	MAKERAY	UTILITY	LEFT	RIGHT	TOP	PRINT	EXIT	EXIT

JEA 5-7-00 Hal 5-7-00

PLANT: PLANT FARLEY UNIT 1 5/6/00 CIRC. POS.: 80 DEGREES
SYSTEM: FEEDWATER 'A' 0:08 ANALYST: J. ERIC AYCOCK L/III
COMPONENT: ALA2-4150-22R CAL. SHEET: S00F1U276

INDICATION EVALUATION WORKSHEET TABLE IWB-3514-1 (CLASS 1 PRESERVICE INSPECTION CARBON S

WELD NUMBER ALA2-4150-22R DATE 05/07/00 SHEET NO. S00F1U276 Page 3 of 3

ANGLE 45 SHEAR

SURFACE CONNECTED FLAW=1; SUBSURFACE=0 0

Y=S/a, if S is less than .4d, then it is a surface flaw

IF S<.4d THE FLAW INDICATION IS CLASSIFIED AS A SURFACE INDI

IF Y>1.0, USE Y=1.0

INDICATION NUMBER	LENGTH L	THICKNESS 't' excluding clad	NEAR DEPTH	FAR DEPTH	Surface a value	Subsurface a value	(LIGAMENT) S	a/l	a/t	Y(S/a)
1	0.20	0.89	0.71	0.76	0.05	0.03	0.13	0.13	2.81	5.20

1.00

CLASS 1 TABLE FOR ALLOWABLE a/t%

ASPECT RATIO	SURFACE	SUBSURFACE	*Y=
0.000	6.812	8.528	
0.050	7.312	8.844	
0.100	8.028	9.644	
0.125	8.478	10.152	10.15
0.150	8.928	10.660	
0.200	9.852	11.752	
0.250	9.852	11.500	
0.300	9.852	11.500	
0.350	9.852	11.500	
0.400	9.852	11.500	
0.450	9.852	11.500	
0.500	9.852	11.500	

——> ACCEPTABLE SUBSURFACE DEFECT

SURFACE TABLE IF not exact t	IF exact t	SUBSURFACE TABLE IF not exact	IF exact t
6.812	0.000	8.528	0.000
7.312	0.000	8.844	0.000
8.028	0.000	9.644	0.000
8.928	0.000	10.660	0.000
9.852	0.000	11.752	0.000
9.852	0.000	11.500	0.000
9.852	0.000	11.500	0.000
9.852	0.000	11.500	0.000
9.852	0.000	11.500	0.000
9.852	0.000	11.500	0.000
9.852	0.000	11.500	0.000
9.852	0.000	11.500	0.000

PRESERVICE TABLE IWB-3514-1 **(ALLOWABLE a/t % VALUES)**

Aspect Ratio	<= 0.312"	INTERPOLATED THICKNESS 0.89	1"	INTERPOLATED THICKNESS not used	2"	INTERPOLATED THICKNESS not used	3"	INTERPOLATED THICKNESS not used
a/l	SURFACE		SURFACE		SURFACE		SURFACE	
0	7.4	6.81	6.7	7.70	5.7	7.70	4.7	7.70
0.05	7.9	7.31	7.2	8.20	6.2	8.60	5.0	8.00
0.10	8.7	8.03	7.9	9.00	6.8	9.40	5.5	9.10
0.15	9.6	8.93	8.8	10.10	7.5	10.30	6.1	10.00
0.20	9.6	9.85	9.9	11.40	8.4	11.40	6.9	11.40
0.25	9.6	9.85	9.9	10.30	9.5	12.90	7.8	12.90
0.30	9.6	9.85	9.9	10.30	9.5	10.90	8.8	14.50
0.35	9.6	9.85	9.9	10.30	9.5	10.90	8.8	14.50
0.40	9.6	9.85	9.9	10.30	9.5	10.90	8.8	14.50
0.45	9.6	9.85	9.9	10.30	9.5	10.90	8.8	14.50
0.50	9.6	9.85	9.9	10.30	9.5	10.90	8.8	14.50
	SUBSURFACE (ALL *Y)		SUBSURFACE (ALL *Y)		SUBSURFACE (ALL *Y)		SUBSURFACE (ALL *Y)	
0	9.2	8.53	8.4	9.60	7.2	10.00	5.8	9.40
0.05	9.6	8.84	8.7	9.90	7.5	10.30	6.1	10.00
0.10	10.4	9.64	9.5	10.90	8.1	11.10	6.6	10.80
0.15	11.5	10.66	10.5	12.00	9.0	12.40	7.3	11.80
0.20	11.5	11.75	11.8	13.50	10.1	13.90	8.2	13.30
0.25	11.5	11.50	11.5	11.60	11.4	15.60	9.3	15.30
0.30	11.5	11.50	11.5	11.60	11.4	13.20	10.5	17.40
0.35	11.5	11.50	11.5	11.60	11.4	10.60	11.8	19.30
0.40	11.5	11.50	11.5	11.60	11.4	10.60	11.8	16.00
0.45	11.5	11.50	11.5	11.60	11.4	10.60	11.8	12.40
0.50	11.5	11.50	11.5	11.60	11.4	10.60	11.8	12.40

Ultrasonic Thickness and Contour Examination Record — **Southern Nuclear Operating Company**

Unit	Weld Number	Sheet No.	Date
1	ALA2-4150-22R	S00F1U281	5/6/00

Drawing Number	Couplant/Batch Number	Instrument Manufacturer
ALA2-4150	ULTRAGEL II / 00125	PANAMETRICS

Material Type	Calibration Standard/ Serial No.	Model Number	Serial Number
☒ C/S ☐ S/S Other	CS STEP / 86-4257	EPOCH II	91060212

Examiner	SNT Level	Transducer Manufacturer	Type	Size
GARY A. LOFTHUS	III	KBA	MSEB	3.5X10MM

Examiner	SNT Level	Serial Number	Frequency
J. ERIC AYCOCK	III	06605	4 MHz

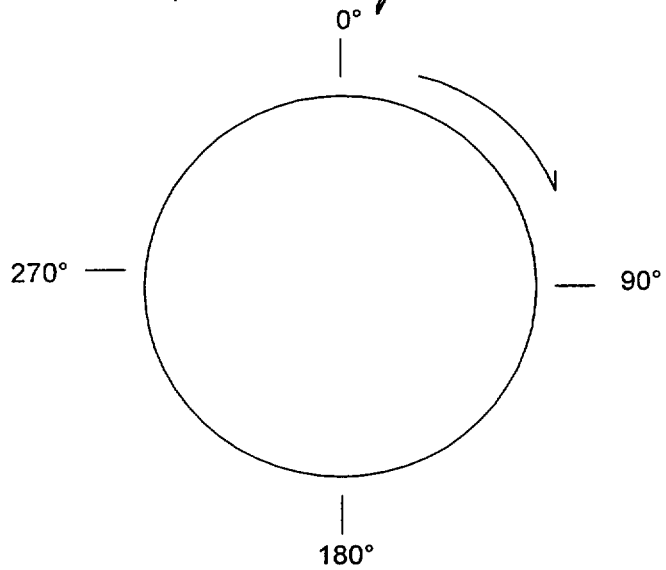

Location	0°	90 °	180°	270°
A	1.134"	1.170"	1.198"	1.153"
B	0.895"	0.846"	0.952"	0.973"
C	0.902"	0.881"	0.852"	0.902"
D	0.837"	0.837"	0.822"	0.846"
E	0.865"	0.902"	0.862"	0.865"

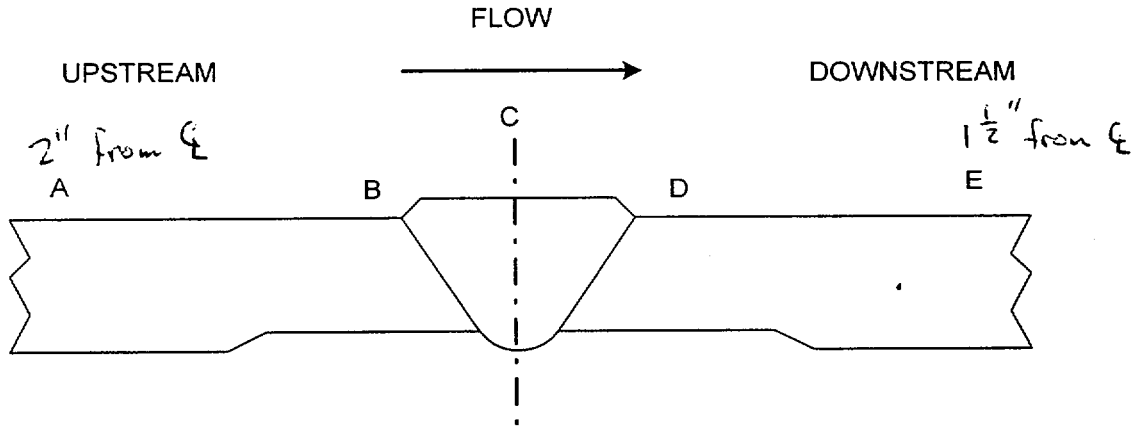

COUNTERBORE

Reducer — UPSTREAM

Nozzle — DOWNSTREAM

REMARKS:

QEA 5-7-00
~~NONE~~ See Page 2 for Weld profiles.

E Level II/III Review	Level	Date	Non-Technical Review	Date
Gary A. Lofthus	III	5-7-00	J. Eric Aycock	5-7-00

0°

RED

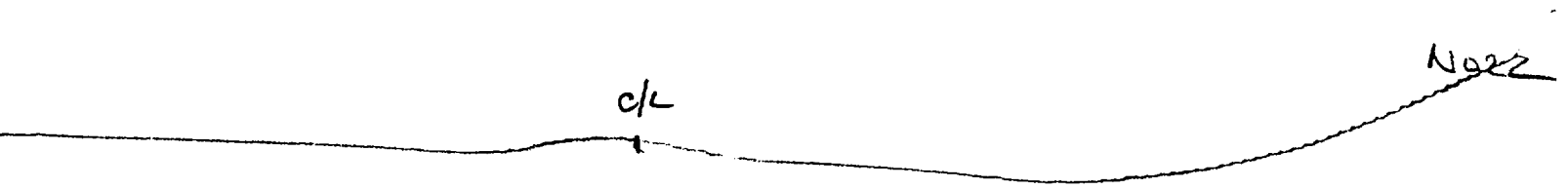

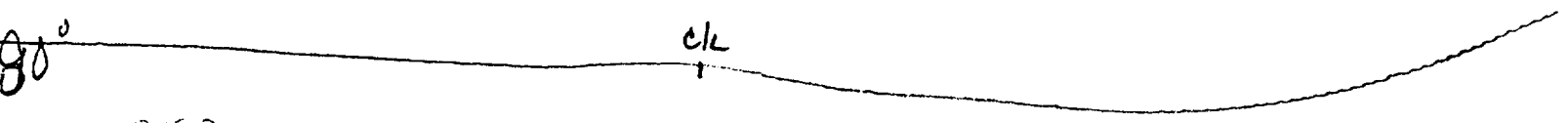

RED

N022

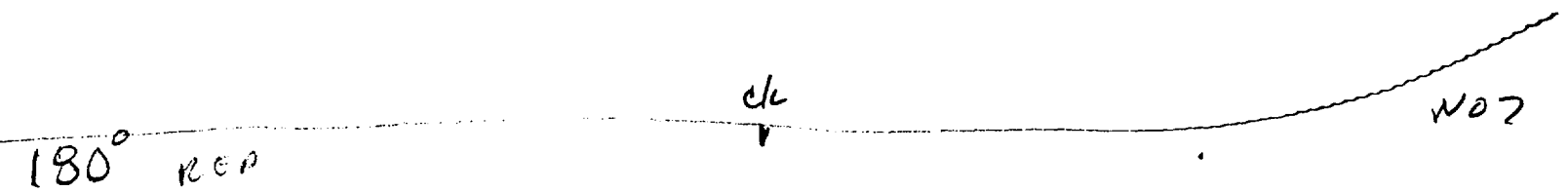

180° RED

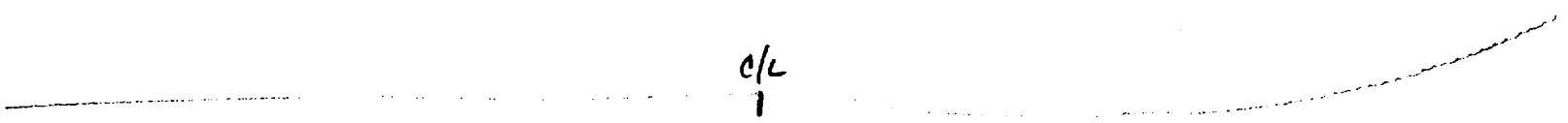

270° RED

N022

BECHTEL

WPIR #	NONDESTRUCTIVE EXAMINATION REPORT MAGNETIC PARTICLE EXAMINATION		REPORT #
P-FWA-005			MT-00-111
JOB # 23734	JOB NAME FARLEY UNIT 1 SGR	SURFACE CONDITION ☒ GROUND ☐ AS WELDED	DATE 5/6/00
ISO / DWG # FSK-M-012	ITEM / COMP ID Feedwater	TIME OF EXAM ☐ N/A ☐ PRE-PWHT ☒ POST-PWHT	COMPONENT TEMP Ambient
CODE / WELD CLASS ASME XI CL.2	COMPONENT CONFIGURATION Reducer to Nozzle	MATL TYPE ☒ CARBON STEEL	PROCEDURE & REVISION MT-ASME III / XI REV. 2

EQUIPMENT ☒ YOKE ☒ AC
☒ CALIBRATION VERIFIED DA400/SN 10004
☐ 10 LBS cal. due 8/17/00

EXAM MEDIUM ☒ DRY ☒ VISIBLE
MFR MAGNAFLUX DESIG/COLOR 8A-RED BATCH 99H114

INDICATION CODE: NI=NO INDICATIONS NRI=NO RECORDABLE INDICATIONS C=CRACK
ROUND=ROUNDED INDICATION LINEAR=LINEAR INDICATION

PART OR WELD #	ACC (√)	REJ (√)	IND CODE	REMARKS
FW 20 R1, SG	✓		NI	None

SKETCH / COMMENTS

Lift Plate # 1058

FNP ISI # ALA2-4150-22.R

M&TE NO. N/A

CAL. DUE DATE: N/A

EXAMINER	LEVEL	DATE
Wade A. Selby	II	5/6/00
REVIEW		DATE
[signature]	II	5/6/00

Lv. III 5-7-00

[signature] Lv. III
ANSI Review: [signature] 5/12/00

SHARED

FARLEY NUCLEAR PLANT
Ultrasonic Calibration and Examination Record

FNP-NDE-100.31
Southern Nuclear Operating Company

Unit	Sketch/Component No.	Date	Sheet No.	Page 1 of 4
1	ALA2-4250-16R	5/12/00	S00F1U278	

Procedure/Rev./TCN	Couplant/Batch No.	Thermometer SN/Cal Due Date	Linearity Sheet No.
FNP-NDE-100.31 / 7 / N/A	ULTRAGEL II / 00125	38193 / 8/27/2000	S00F1L019

Instrument			Search Unit		Calibration Block	
Instrument	PANAMETRICS		Transducer Mfg.	KBA	Cal. Blk. No.	ALA-51
Serial No.	91060212		Serial No.	41016	Thickness	.79
	Ax dB	Circ. dB	Size	.50	Cal. Temp.	70
Ref.	27.1	32.1	Frequency/Mode	2.25 / S	Cal. In	0119
Scan	33.1	38.1	"A" Dimension	.35	Cal. Chk.	0205
Reject	0		Nominal Angle	45	Cal. Out	0403
Frequency	2.25		Measured Angle	45	Ref. Blk. No.	86-4333
Mode	PE		Cable Type	RG-174	Reflector	SDH@35db
Damping	HIGH/400		Cable Length	6'	Amplitude/Sweep	36%/2.8 DIV

Axial Scan Calibration				Circ. Scan Calibration			
Cal. Refl.	Signal Amp.	Sweep Div.	Wmax	Cal. Refl.	Signal Amp.	Sweep Div.	Wmax
1T	80	3.0	.7	1T	80	4.0	.8
2T	65	6.0	1.45	2T	50	8.0	1.6
3T	40	9.0	2.2				

Calibration Remarks:
MSEB 4MHZ 06605 was used to perform the lamination scan. [illegible] 5-12-00

Comp. Temp.: 92 °F Configuration: REDUCER TO NOZZLE Wo Location V-STAMP Lo Location TDC

Scan Dir.	Results NI	NRI	RI	Ind. No.	% DAC	Length L1	Lmax	L2	Reference Measurement W1	Wmax	W2	Sweep Position S1	Smax	S2	Thickness 1"<--	C/L	--->1"	Notes:
5		●		N/A														
2			●	1	25	17.65"	18.25"	18.75"	-	.78"	-	-	1.22"	-	.82"	.868"	.82"	LOW AMP. SIGNAL ON 5 SIDE
2			●	2	30	23.65"	23.75	23.85"	-	.85"	-	-	1.26"	-	-	-	-	
7			●	3	20	.4"	.5"	.625"	*	0	*	1.12"	1.09"	1.06"	-	.750"	-	.1" LENGTH

Examination/Limitation Remarks: LAM SCAN PERFORMED IN BASE MATERIAL OF INTEREST PRIOR TO ANGLE BEAM EXAMINATION. LAM SCAN AMPLITUDE MAINTAIN 50 TO 80 PERCENT OF FULL SCREEN HEIGHT.

See IER-17

Total Length of Weld	Crown Width	Total Length of Weld Examined	Extent of Perpendicular Scans (W)	Extent of Parallel Scans (L)
51"	1.2"	5 (L) 51 2 (L) 51 7 & 8 (W) 51	5 - from NL to NL 2 - from NL to NL	From (5) NL to (2) NL

Primary Examiner	Level	Assistant Examiner	Level	Non-Technical Review	Date
GARY A. LOFTHUS	III	J. ERIC AYCOCK	III	J. Eric Aycock	5-12-00
SNC NDE Level II/III Review		Date	Percentage of Code Coverage	ANII Review	Date
Gary A. Lofthus III		5-12-00	100 %	[illegible]	5/12/00

Figure 1

Revision 7

FARLEY NUCLEAR PLANT
Ultrasonic Examination Continuation Record

FNP-NDE-100.31
Southern Nuclear Operating Company

Unit	Sketch/Component No.	Date	Sheet No.
1	ALA2-4250-16R	5/12/00	S00F1U278

Page 2 of 4

Procedure/Rev./TCN: FNP-NDE-100.31 / 7 / N/A

Appendix III Exams. D1 = NA D2 = NA

Measured Angle = 45 °

Configuration: REDUCER TO NOZZLE

Scan Dir.	Crown Width	Results NI	Results NRI	Results RI	Ref No	% DAC	Length L1	Length Lmax	Length L2	Reference Measurement W1	Reference Measurement Wmax	Reference Measurement W2	Sweep Position S1	Sweep Position Smax	Sweep Position S2	Thickness 1"< --	Thickness C/L	Thickness -- >1"	Notes:
8			●	4		20	2.5"	2.375"	2.25"	*	0	*	1.18"	1.12"	1.06"	-	.750"	-	.1" LENGTH

Examination/Limitation Remarks: LAM SCAN PERFORMED IN BASE MATERIAL OF INTEREST PRIOR TO ANGLE BEAM EXAMINATION. LAM SCAN AMPLITUDE MAINTAIN 50 TO 80 PERCENT OF FULL SCREEN HEIGHT.

Total Length of Weld	Crown Width	Total Length of Weld Examined	Extent of Perpendicular Scans (W)	Extent of Parallel Scans (L)
51"	1.2"	5 (L) 51 2 (L) 51 7 & 8 (W) 51	5 - from NL to NL 2 - from NL to NL	From (5) NL to (2) NL

Primary Examiner	Level	Assistant Examiner	Level	Non-Technical Review	Date
GARY A. LOFTHUS	III	J. ERIC AYCOCK	III	J. Eric Aycock	5-12-00

SNC NDE Level II/III Review		Date	Percentage of Code Coverage	ANII Review	Date
Gary A. Lofthus	III	5-12-00	100 %		5/12/00

Figure 1

Revision 7

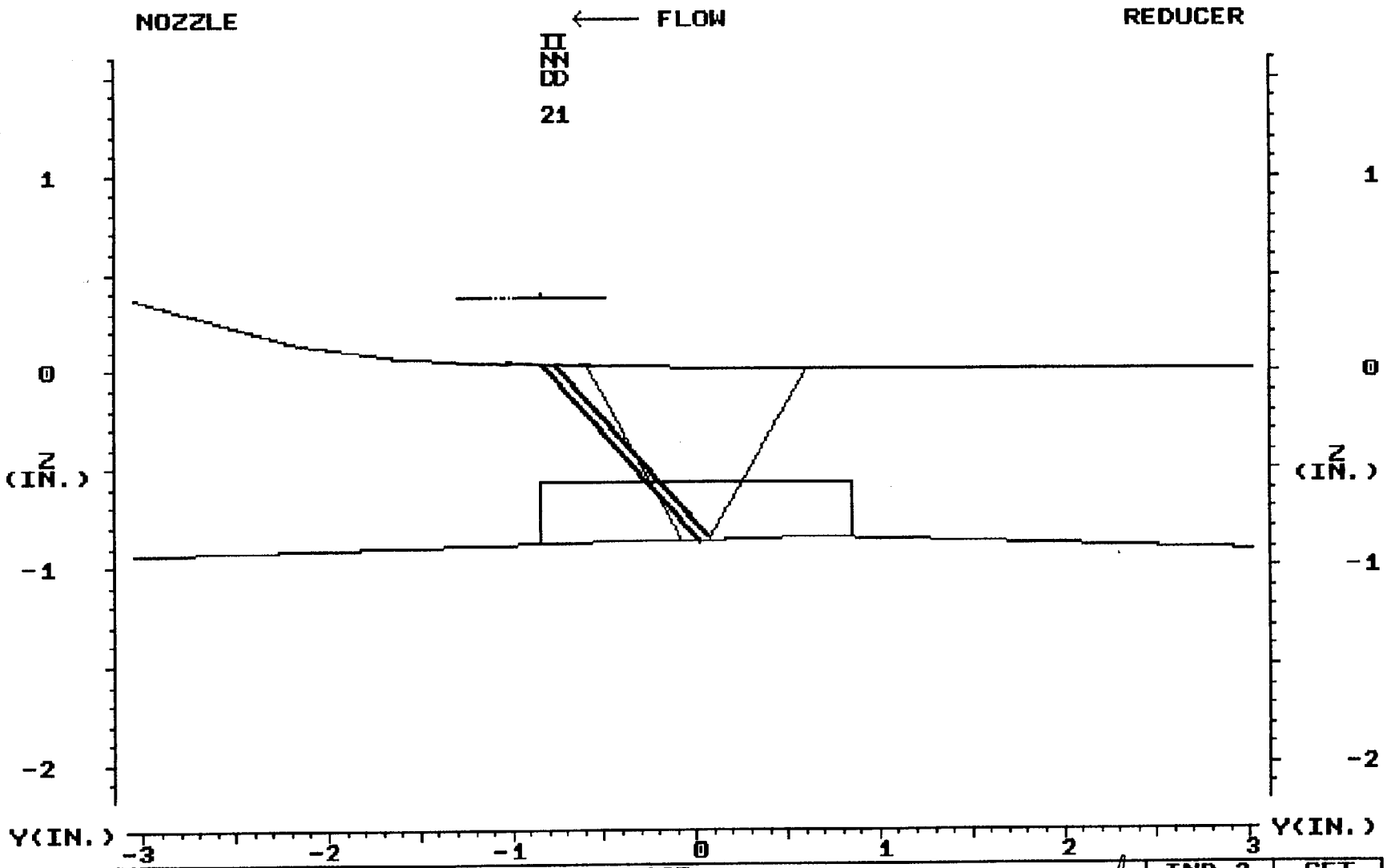

IND 1	SET	1R16016R	IND 2	SET
0.86	DEP		0.00	DEP
1.22	MP		0.00	MP
27.51	TOF	INDICATION 1 AND 2 ARE ROOT GEOMETRY.	8.00	TOF
	ARC	INDICATION 3 AND 4 ARE ID GEOMETRY IN REPAIRED AREA		FAN
	GATE	AND PLOT TO THE SAME PLACE IN THE CENTER OF THE WELD		GATE
0.010	STEP	SEE SHEET 3 FOR INDICATIONS 3 AND 4 (CIRC) JGA	1.000	STEP
	EXIT	MAKERAY UTILITY LEFT RIGHT TOP PRINT EXIT		EXIT

JGA 5-12-00

PLANT: PLANT FARLEY UNIT 1 5/12/00 CIRC. POS.: 0 DEGREE
SYSTEM: FEEDWATER 'B' ANALYST: J. ERIC AYCOCK L/III
COMPONENT: AL A2-4250-16R 3:05 CAL. SHEET: S00F1U278

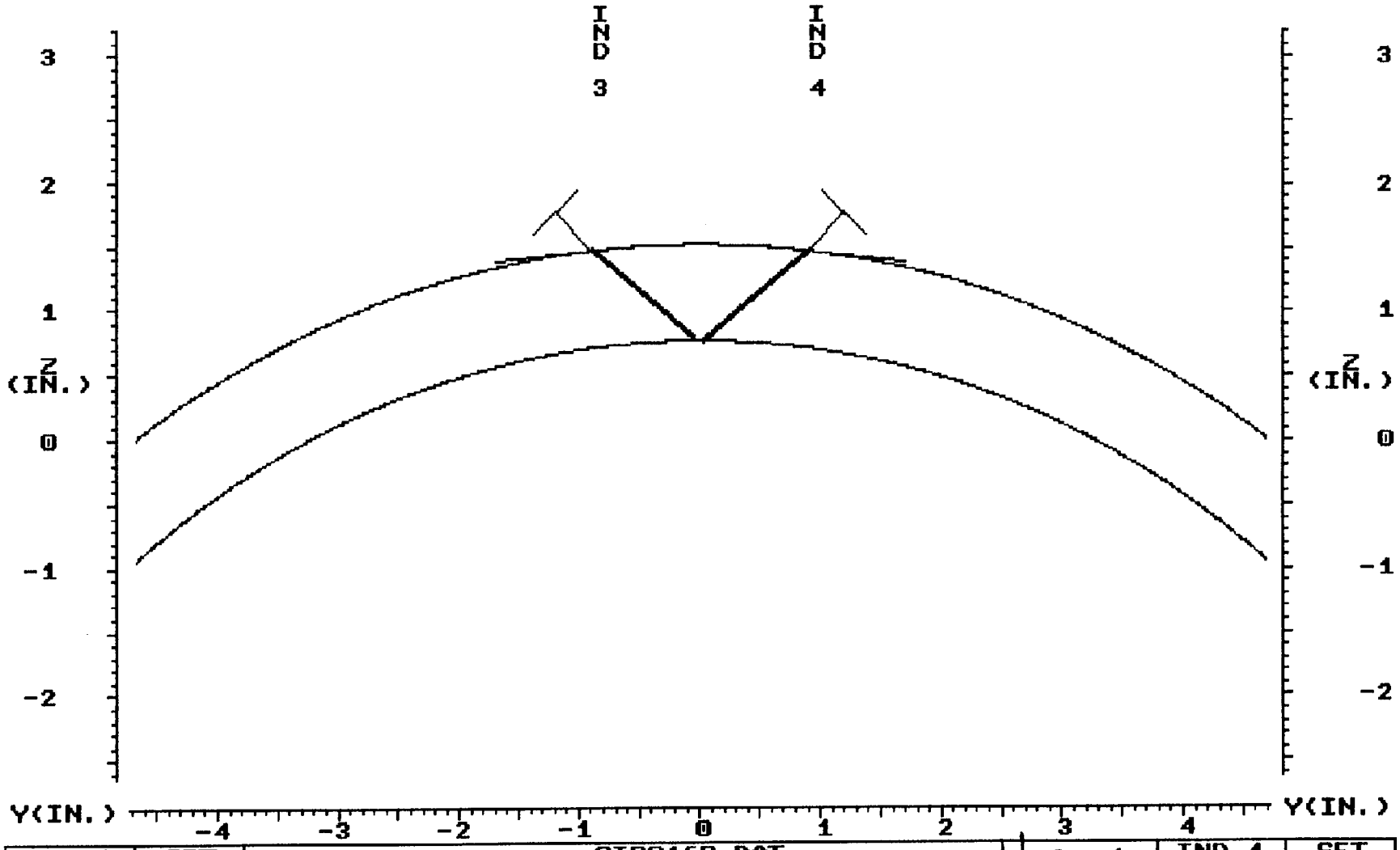

IND 3	SET
0.77	DEP
1.09	MP
25.49	TOF
	ARC
	GATE
0.010	STEP
	EXIT

CIRC16R.DAT

Ad 5-12-00

INDICATION 3 AND 4 ARE ID GEOMETRY IN REPAIRED AREA AND PLOT TO THE SAME PLACE IN THE CENTER OF THE WELD

JEA

IND 4	SET
0.79	DEP
1.12	MP
25.91	TOF
	ARC
	GATE
0.010	STEP
	EXIT

MAKERAY | UTILITY | LEFT | RIGHT | TOP | PRINT | EXIT

PLANT: FARLEY UNIT 1
SYSTEM: FEEDWATER 'B'
COMPONENT: ALA2-4250-16R

5/12/00

CIRC. POS.: 1.4"
ANALYST: J.ERIC AYCOCK L/III
CAL. SHEET: S00F1U278 PAGE 4OF4

Ultrasonic Thickness and Contour Examination Record — **Southern Nuclear Operating Company**

Unit	Weld Number	Sheet No.	Date
1	ALA2-4250-16R	1 of 2 S00F1U282	5/12/00

Drawing Number	Couplant/Batch Number	Instrument Manufacturer
ALA2-4250	ULTRAGEL II / 00125	PANAMETRICS

Material Type	Calibration Standard/ Serial No.	Model Number	Serial Number
☒ C/S ☐ S/S Other	CS STEP / 86-4263	EPOCH II	91060212

Examiner		SNT Level	Transducer Manufacturer	Type	Size
GARY A. LOFTHUS	Gal	III	KBA	MSEB	3.5X10MM

Examiner		SNT Level	Serial Number	Frequency
J. ERIC AYCOCK	J. Eric Aycock	III	06605	4 MHz

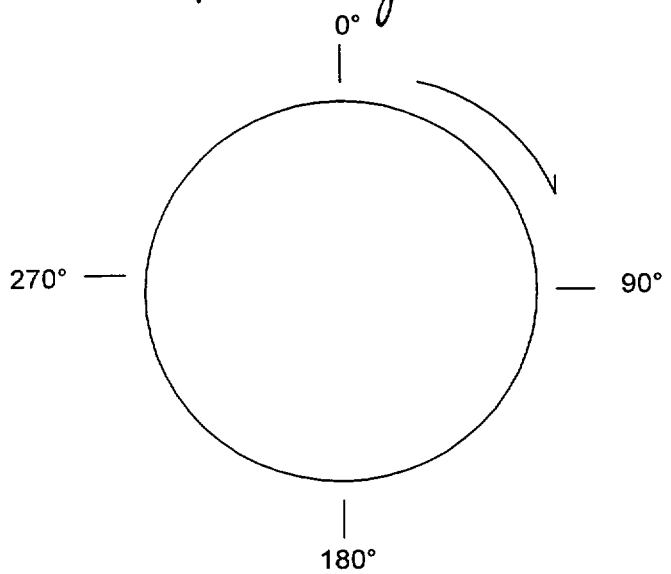

Location	0°	90 °	180°	270°
A	.928	.918	.909	.879
B	.850	.860	.839	.829
C	.808	.888	.860	.839
D	.860	.888	.900	.860
E	.900	.900	.888	.888

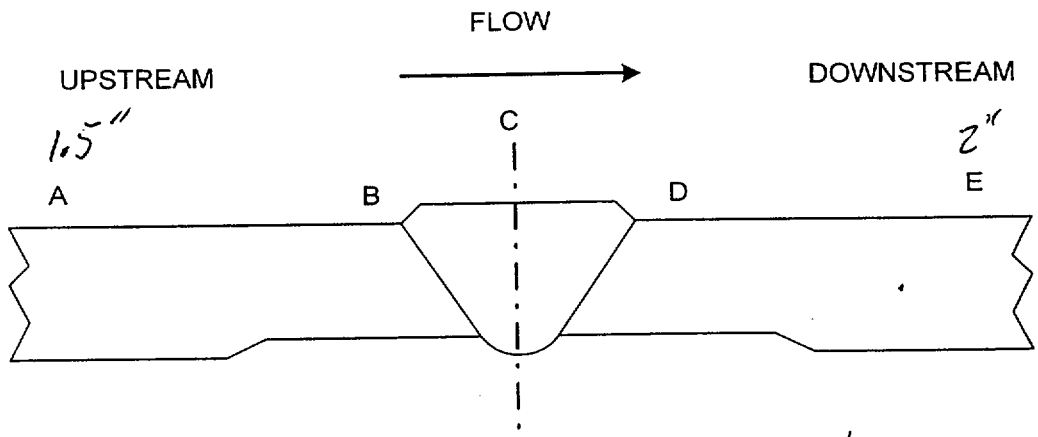

COUNTERBORE — Reducer (UPSTREAM) — Nozzle (DOWNSTREAM)

REMARKS: Center of weld at 1" is ground flush and reading .750".

Level II/III Review	Level	Date	Non-Technical Review	Date
Gary A. Lofthus	III	5-12-00	J. Eric Aycock	5-12-00

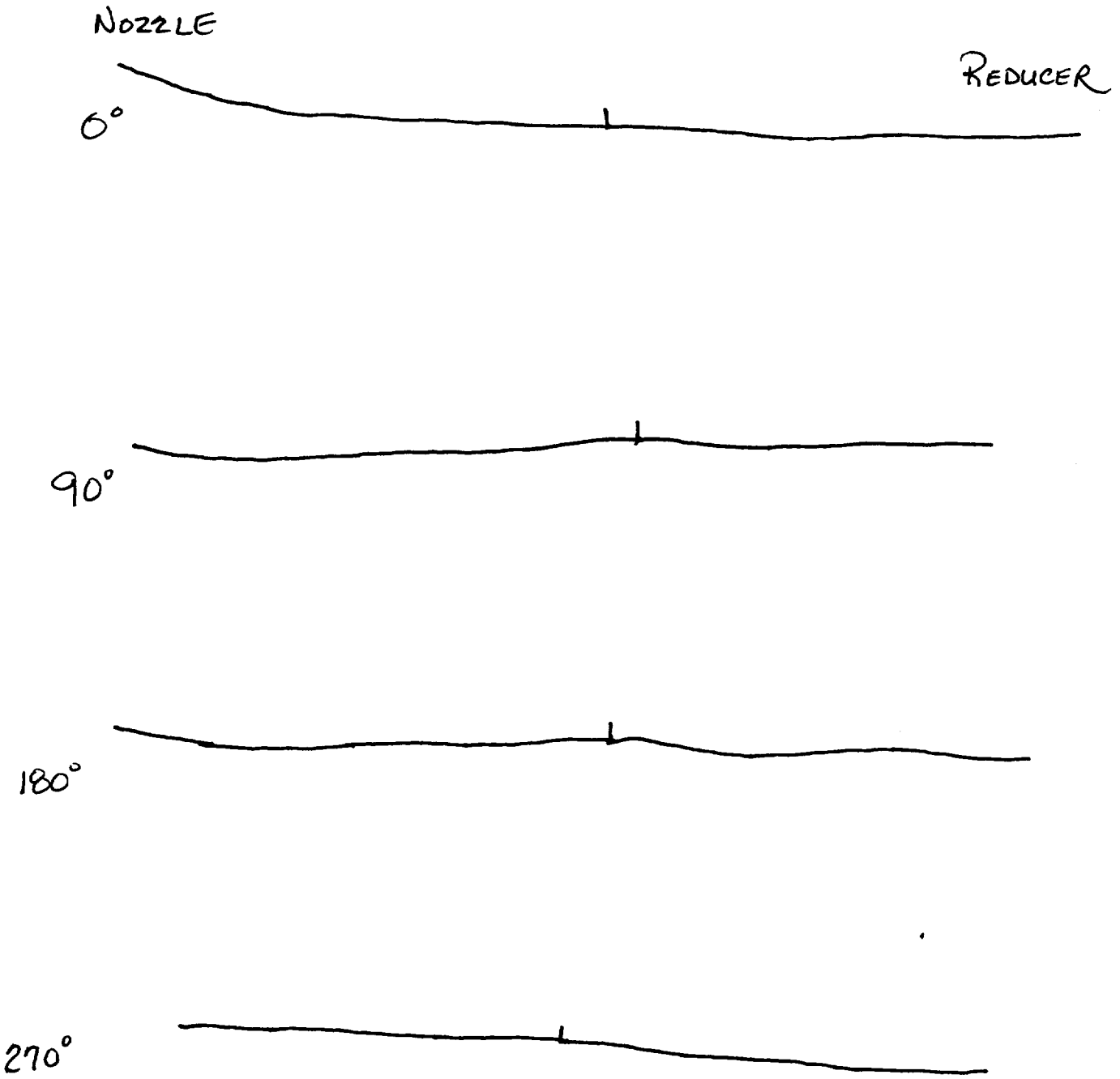
NOZZLE
REDUCER
0°
90°
180°
270°

BECHTEL

WPIR #	NONDESTRUCTIVE EXAMINATION REPORT MAGNETIC PARTICLE EXAMINATION	REPORT #
P-FWB-067		MT-00-149

JOB #	JOB NAME	SURFACE CONDITION	DATE
23734	FARLEY UNIT 1 SGR	☒ GROUND ☐ AS WELDED	5/11/00

ISO / DWG #	ITEM / COMP ID	TIME OF EXAM	COMPONENT TEMP
FSK-M-148	FW	☐ N/A ☐ PRE-PWHT ☒ POST-PWHT	AMBIENT

CODE / WELD CLASS	COMPONENT CONFIGURATION	MATL TYPE	PROCEDURE & REVISION
ASME XI / CL 2	REDUCER TO NOZZLE	☒ CARBON STEEL	MT-ASME III / XI REV. 2

EQUIPMENT ☒ YOKE ☒ AC DA-400
☒ CALIBRATION VERIFIED SN-10004
☐ 10 LBS Cal. Due 8-17-00

EXAM MEDIUM ☒ DRY ☒ VISIBLE
MFR MAGNAFLUX DESIG/COLOR 8A-RED BATCH 99H114

INDICATION CODE: NI=NO INDICATIONS NRI=NO RECORDABLE INDICATIONS C=CRACK
ROUND=ROUNDED INDICATION LINEAR=LINEAR INDICATION

PART OR WELD #	ACC (√)	REJ (√)	IND CODE	REMARKS
FW 14-SG-R1	✓		NI	NONE

SKETCH / COMMENTS Lift Plate #1058

FNP ISI # ALA2-4250-16R

M&TE NO. N/A

CAL. DUE DATE: N/A

EXAMINER	LEVEL	DATE
Pam E. Drifflen	II	5/11/00
REVIEW		**DATE**
[illegible]	III	5/11/00

J. Eric Aycock SNC Level III 5-12-00

ANII REVIEW: [illegible] 5/12/00

BECHTEL

WP&IR #	NONDESTRUCTIVE EXAMINATION REPORT MAGNETIC PARTICLE EXAMINATION		REPORT #
P-FWB-067			MT-00-011
JOB # 23734	JOB NAME Farley Unit 1 SGRP	SURFACE CONDITION ☐ GROUND ☒ AS WELDED	DATE 3/3/00
ISO / DWG # FSK-M-163	ITEM / COMP ID Feedwater	TIME OF EXAM ☐ N/A ☐ PRE-PWHT ☒ POST-PWHT	COMPONENT TEMP Ambient
CODE / WELD CLASS ASME XI / C-F-2	COMPONENT CONFIGURATION sock-o-let	MATL TYPE ☒ CARBON STEEL	PROCEDURE & REVISION MT-ASME III/XI R/2

EQUIPMENT ☒ YOKE ☒ AC ☒ CALIBRATION VERIFIED DA-400/#9400 cal. due 8/17/00 ☐ 10 LBS

EXAM MEDIUM ☒ DRY ☒ VISIBLE Batch # 99H114

MANUFACTURER Magnaflux DESIG / COLOR SA-Red

INDICATION CODE: NI=NO INDICATIONS NRI=NO RECORDABLE INDICATIONS C=CRACK ROUND=ROUNDED INDICATION LINEAR=LINEAR INDICATION

PART OR WELD #	ACC (√)	REJ (√)	IND CODE	REMARKS
FW-1SG	✓		NI	note: ID of weld not accessible
PSI # ALA2-4250-22R BC			3/22/00	for inspection

SKETCH / COMMENTS

M&TE NO. Lift Plate Ser # 1058

CAL. DUE DATE: NA

EXAMINER	LEVEL	DATE
Walt. Sills	II	3/4/00
REVIEW		**DATE**
[illegible]	III	3/20/00

SNC Review - J. Eric Aycock J-III 4-17-00 ANI REVIEW: C G Wood 4/22/00

SHARED

FNP-0-NDE-100.31

FARLEY NUCLEAR PLANT
Ultrasonic Calibration and Examination Record

Southern Nuclear Operating Company

Unit	Sketch/Component No.	Date	Sheet No.	Page 1 of 1
1	ALA2-4350-23R	5/11/00	S00F1U275	

Procedure/Rev./TCN	Couplant/Batch No.	Thermometer SN/Cal Due Date	Linearity Sheet No.
FNP-0-NDE-100.31 / 7 / N/A	ULTRAGEL II / 00125	38193 / 8/27/2000	S00F1L019

Instrument		Search Unit		Calibration Block	
Instrument	PANAMETRICS	Transducer Mfg.	KBA	Cal. Blk. No.	ALA-25
Serial No.	91060212	Serial No.	41016	Thickness	.750"
	Ax. dB / Circ. dB	Size	.50	Cal. Temp.	75
Ref.	29 / 32.7	Frequency/Mode	2.25 / S	Cal. In	09:05 hrs
Scan	35 / 38.7	"A" Dimension	.35	Cal. Chk.	n/a
Reject	0	Nominal Angle	45	Cal. Out	12:36 hrs
Frequency	2.25	Measured Angle	45	Ref. Blk. No.	n/a
Mode	PE	Cable Type	RG-174	Reflector	n/a
Damping	HI / 400	Cable Length	6'	Amplitude/Sweep	n/a

Axial Scan Calibration				Circ. Scan Calibration			
Cal. Refl.	Signal Amp.	Sweep Div.	Wmax	Cal. Refl.	Signal Amp.	Sweep Div.	Wmax
1T	80	3.0	.7	1T	80	4.0	.8
2T	45	6.0	1.45	2T	60	8.0	1.6
3T	30	9.0	2.2				

Calibration Remarks:
06605 0 deg. MSEB used to perform lamination scan.

Comp. Temp.: 84 °F Configuration: ELBOW TO REDUCER Wo Location V-STAMP Lo Location TDC

Scan Dir.	Results NI	NRI	RI	Ind. No.	% DAC	Length L1	Lmax	L2	Reference Measurement W1	Wmax	W2	Sweep Position S1	Smax	S2	Thickness 1"<--	C/L	-->1"	Notes:
2	○	●	○	N/A														
5	○	●	○	N/A														
7	○	●	○	N/A														
8	○	●	○	N/A														

Examination/Limitation Remarks: LAM SCAN PERFORMED IN BASE MATERIAL OF INTEREST PRIOR TO ANGLE BEAM EXAMINATION; AMPLITUDE MAINTAINED 50 TO 80 PERCENT FSH.

LOW LEVEL (LESS THAN 20% DAC) ROOT SIGNALS SEEN INTERMITTENTLY.

Total Length of Weld	Crown Width	Total Length of Weld Examined	Extent of Perpendicular Scans (W)	Extent of Parallel Scans (L)
44"	1.0"	5 (L) NL 2 (L) NL 7 & 8 (W) NL	5 - from NL to NL 2 - from NL to NL	From (5) NL to (2) NL

Primary Examiner	Level	Assistant Examiner	Level	Non-Technical Review	Date
PAUL DiVALERIO Paul DiValerio	II	SCOTT R. ERICKSON Scott R. Erickson	II	Barry R. Lafferty	5-12-00

SNC NDE Level II/III Review	Date	Percentage of Code Coverage	ANII Review	Date
J. Eric Lycock L-III	5-11-00	100 %	C G Wood	5/12/00

Figure 1

Revision 7

Ultrasonic Thickness and Contour Examination Record — **Southern Nuclear Operating Company**

Unit	Weld Number	Sheet No.	Date
1	ALA2-4350-23R	S00F1U283 1 of 2	5/11/00

Isometric/Drawing Number	Couplant/Batch Number	Instrument Manufacturer
ALA2-4350	ULTRAGEL II / 00125	PANAMETRICS

Material Type	Calibration Standard/ Serial No.	Model Number	Serial Number
☒ C/S ☐ S/S Other	CS STEP / 86-4257	EPOCH II	91060212

Examiner	SNT Level	Transducer Manufacturer	Type	Size
PAUL DiVALERIO Paul DiValerio	II	KBA	MSEB	3.5X10MM

Examiner	SNT Level	Serial Number	Frequency
SCOTT R. ERICKSON Scott R. Erickson	II	06605	4 MHz

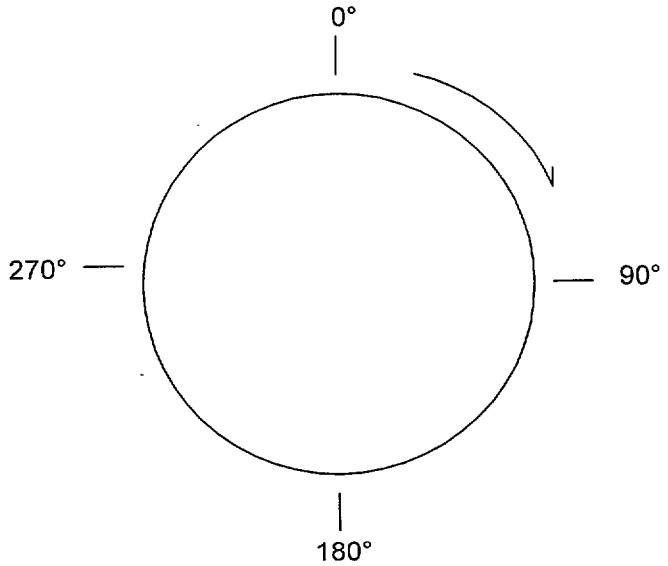

Location	0°	90 °	180°	270°
A	.893	.839	1.05	1.03
B	.839	.839	1.01	1.02
C	.813	.857	.876	.893
D	.958	N/A	.911	.958
E	1.309	1.30	1.34	1.34

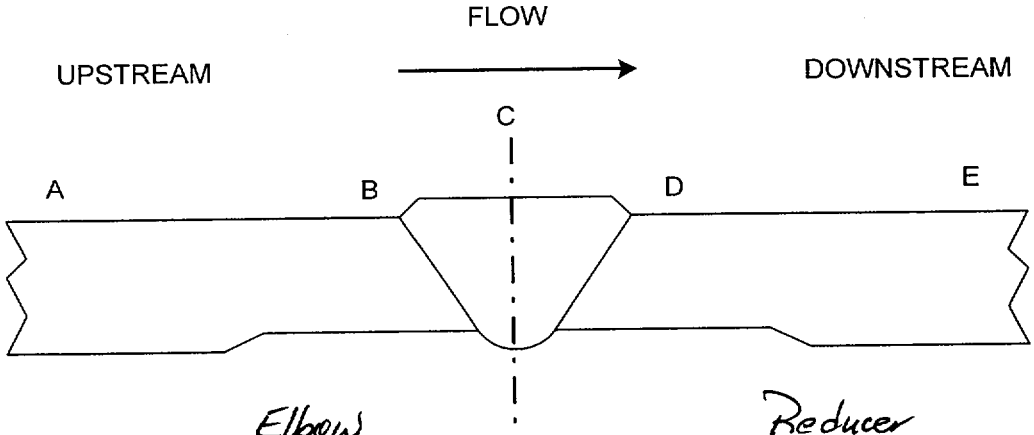

COUNTERBORE

Elbow ~~Reducer~~ GGA 5-11-00
UPSTREAM

Reducer ~~Nozzle~~ GGA 5-11-00
DOWNSTREAM

REMARKS: N/A

NDE Level II/III Review	Level	Date	Non-Technical Review	Date
J. Eric Alycock	III	5-11-00	Darrell A. Jeffries	5-12-00

ALA2-4350-23R

Sheet No. S00FIU283
2 of 2

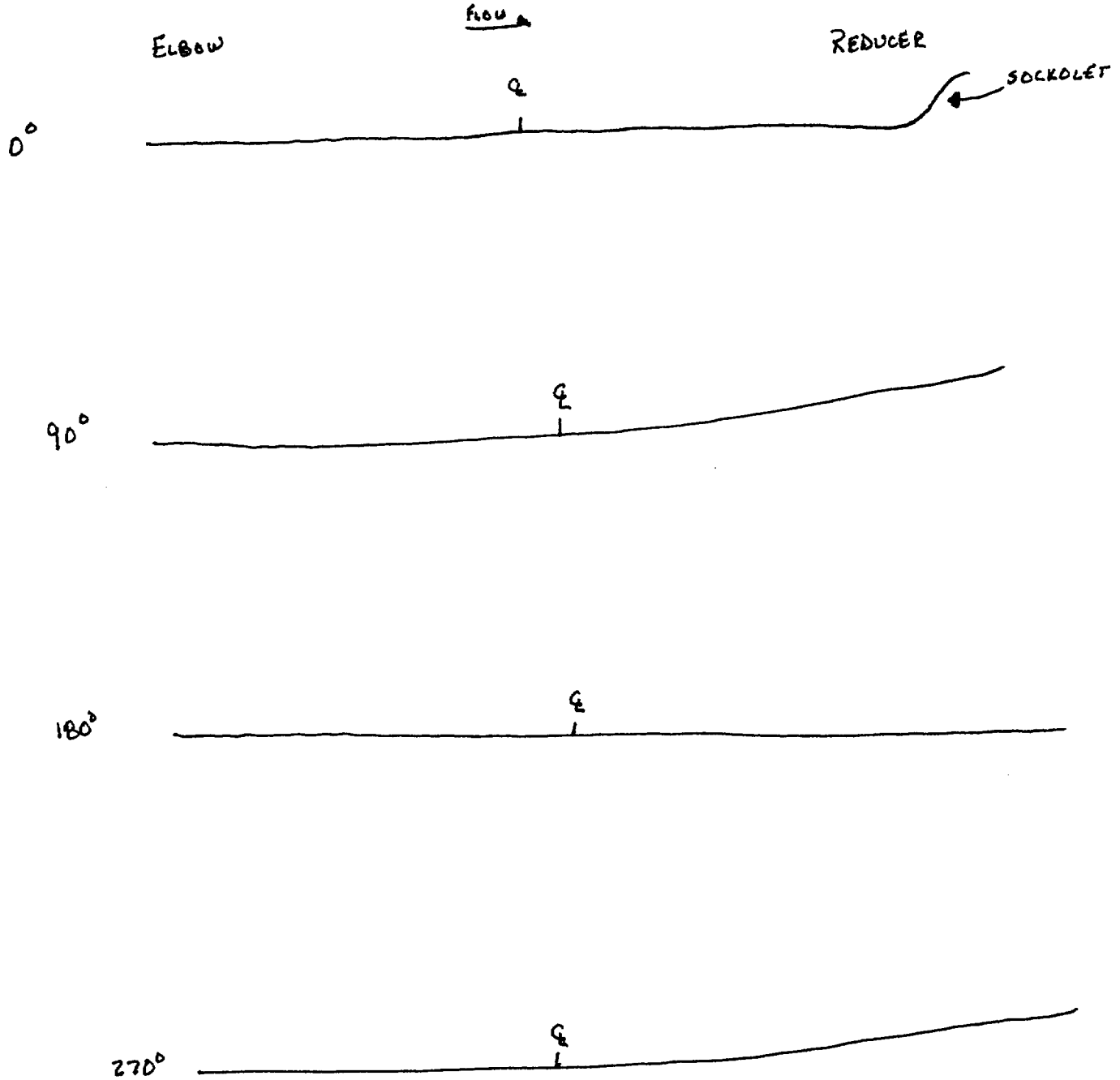

BECHTEL

WPIR #	NONDESTRUCTIVE EXAMINATION REPORT MAGNETIC PARTICLE EXAMINATION		REPORT #
P-FWC-068			MT-00-138
JOB # 23734	JOB NAME FARLEY UNIT 1 SGR	SURFACE CONDITION ☒ GROUND ☐ AS WELDED	DATE 5/11/00
ISO / DWG # FSK-M-150	ITEM / COMP ID Feedwater	TIME OF EXAM ☐ N/A ☐ PRE-PWHT ☒ POST-PWHT	COMPONENT TEMP Ambient
CODE / WELD CLASS ASME XI CL.2	COMPONENT CONFIGURATION Elbow to Reducer Butt weld	MATL TYPE ☒ CARBON STEEL	PROCEDURE & REVISION MT-ASME III / XI REV. 2

EQUIPMENT ☒ YOKE ☒ AC
☒ CALIBRATION VERIFIED DA400PT0004
☐ 10 LBS Cal. due 5/17/00

EXAM MEDIUM ☒ DRY ☒ VISIBLE
MFR MAGNAFLUX DESIG/COLOR 8A-RED BATCH 99H114

INDICATION CODE: NI=NO INDICATIONS NRI=NO RECORDABLE INDICATIONS C=CRACK
ROUND=ROUNDED INDICATION LINEAR=LINEAR INDICATION

PART OR WELD #	ACC (√)	REJ (√)	IND CODE	REMARKS
FW 22 R/SG	✓		NI	None

SKETCH / COMMENTS
Lift Plate #1058

FNP ISI # ALA2-4350-23R

M&TE NO. N/A

CAL. DUE DATE: N/A

EXAMINER	LEVEL	DATE
Wm A. Selby	II	5/11/00
REVIEW		**DATE**
[illegible]	III	5/11/00

J. Eric Aycock L-III 5-11-00

ANI REVIEW: CG Wand 5/12/00

SHARED

FARLEY NUCLEAR PLANT
Ultrasonic Calibration and Examination Record

FNP-0-NDE-100.31
Southern Nuclear Operating Company

Unit	Sketch/Component No.	Date	Sheet No.	
1	ALA2-4350-24R	5/11/00	S00F1U287	Page 1 of 2

Procedure/Rev./TCN	Couplant/Batch No.	Thermometer SN/Cal Due Date	Linearity Sheet No.
FNP-0-NDE-100.31 / 7 / N/A	ULTRAGEL II / 00125	38193 / 8/27/2000	S00F1L019

Instrument		Search Unit		Calibration Block	
Instrument	PANAMETRICS	Transducer Mfg.	KBA	Cal. Blk. No.	ALA-51
Serial No.	91060212	Serial No.	41016	Thickness	.79
	Ax. dB / Circ. dB	Size	.50	Cal. Temp.	75
Ref.	27.1 / 33.3	Frequency/Mode	2.25 / S	Cal. In	09:10 hrs
Scan	33.1 / 39.3	"A" Dimension	.35	Cal. Chk.	N/A
Reject	0	Nominal Angle	45	Cal. Out	12:30 hrs
Frequency	2.25	Measured Angle	45	Ref. Blk. No.	N/A
Mode	PE	Cable Type	RG-174	Reflector	N/A
Damping	HI / 400	Cable Length	6'	Amplitude/Sweep	N/A

Axial Scan Calibration				Circ. Scan Calibration			
Cal. Refl.	Signal Amp.	Sweep Div.	Wmax	Cal. Refl.	Signal Amp.	Sweep Div.	Wmax
1T	80	3.0	.7	1T	80	4.0	.8
2T	45	6.0	1.45	2T	60	8.0	1.6
3T	30	9.0	2.2				

Calibration Remarks:
06605 MSEB 0 deg. was used to perform lamination scan.

Comp. Temp.: 84 °F Configuration: REDUCER TO NOZZLE Wo Location V- Stamp Lo Location TDC

Scan Dir.	Results NI	NRI	RI	Ind. No.	% DAC	Length L1	Lmax	L2	Reference Measurement W1	Wmax	W2	Sweep Position S1	Smax	S2	Thickness 1"<--	C/L	--->1"	Notes:
2			●	1	17	*	41.65	*	*	.8	*		1.28		1.04	0.850	0.937	* - SPOT
5			●	2	10	42	42.05	42.1	*	.9	*		1.33		1.04	0.850	0.937	
7			●	3	25	*	40.75	*	*	0	*		1.68		1.04	0.850	0.937	
8			●	4	20	*	42.75	*	*	0	*		1.49		1.04	0.850	0.937	

Examination/Limitation Remarks: LAMINATION SCAN PERFORMED IN BASE MATERIAL OF INTEREST PRIOR TO ANGLE BEAM EXAM; MAINTAINED AMPLITUDE OF 50 TO 80 PERCENT FSH.

LOW LEVEL (LESS THAN 20%) ROOT SIGNALS SEEN INTERMITTENTLY.

See IER-16

Total Length of Weld	Crown Width	Total Length of Weld Examined	Extent of Perpendicular Scans (W)	Extent of Parallel Scans (L)
50.25	1.2"	5 (L) NL 2 (L) NL 7 & 8 (W) NL	5 - from NL to NL 2 - from NL to NL	From (5) NL to (2) NL

Primary Examiner	Level	Assistant Examiner	Level	Non-Technical Review	Date
PAUL DiVALERIO	II	SCOTT R. ERICKSON	II		5-12-00

SNC NDE Level II/III Review	Date	Percentage of Code Coverage	ANII Review	Date
	5-12-00	100 %		5/12/00

Figure 1

Revision 7

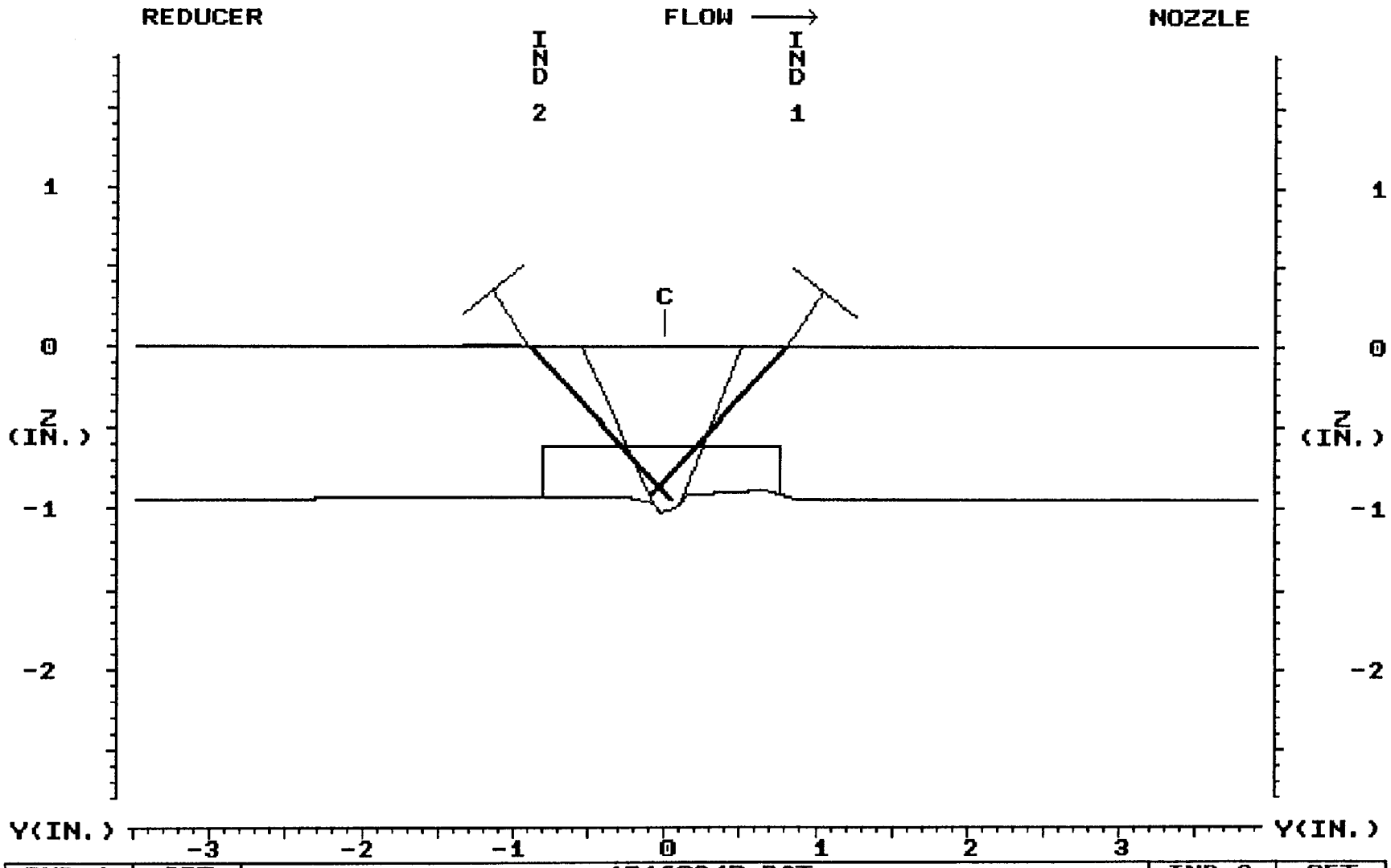

IND 1	SET	1R16024R.DAT						IND 2	SET
0.90	DEP	INDICATION 1,2,3,4 ALL ARE REFLECTED FROM ROOT						0.94	DEP
1.28	MP	GEOMETRY (ROOT CONVEXITY) THAT WAS CONFIRMED ON THE						1.33	MP
28.44	TOF	RT FILM. INDICATIONS 3 AND 4 ARE NOT SHOWN ABOVE AS						29.28	TOF
	ARC	THEY ARE FROM CIRCUMFERENTIAL SCANS. THESE ARE ALL							ARC
	GATE	LOW AMPLITUDE (FROM 10 TO 25% DAC) WITH THE TWO CIRC							GATE
0.010	STEP	REFLECTORS JUST ABOVE THE RECORDABLE CRITERIA. JEA						0.010	STEP
	EXIT	MAKERAY	UTILITY	LEFT	RIGHT	TOP	PRINT	EXIT	EXIT

PLANT: PLANT FARLEY UNIT 1 5/11/00 CIRC. POS.: 0 DEGREES
SYSTEM: FEEDWATER SG 'C' 14:49 ANALYST: J. ERIC AYCOCK L/III
COMPONENT: ALA2-4350-24R CAL. SHEET: S00F1U287

Ultrasonic Thickness and Contour Examination Record — **Southern Nuclear Operating Company**

Unit	Weld Number	Sheet No.	Date
1	ALA2-4350-24R	S00F1U284 1 of 2	5/11/00

Drawing Number	Couplant/Batch Number	Instrument Manufacturer
ALA2-4350	ULTRAGEL II / 00125	PANAMETRICS

Material Type	Calibration Standard/ Serial No.	Model Number	Serial Number
☒ C/S ☐ S/S Other	CS STEP / 86-4257	EPOCH II	91060212

Examiner	SNT Level	Transducer Manufacturer	Type	Size
PAUL DiVALERIO Paul DiValerio	II	KBA	MSEB	3.5X10MM

Examiner	SNT Level	Serial Number	Frequency
SCOTT R. ERICKSON Scott R. Erickson	II	06605	4 MHz

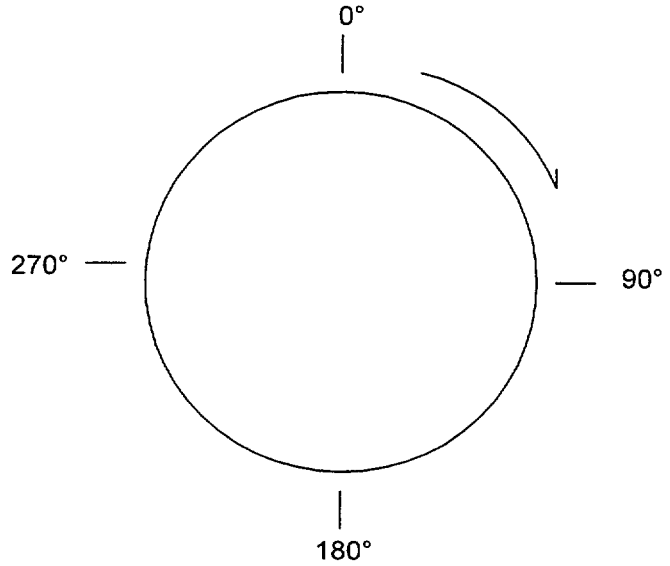

Location	0°	90 °	180°	270°
A	1.04	1.19	1.218	1.21
B	.922	.941	.850	.941
C	.850	.839	.803	.886
D	.889	.876	.876	.876
E	.937	.958	.966	.949

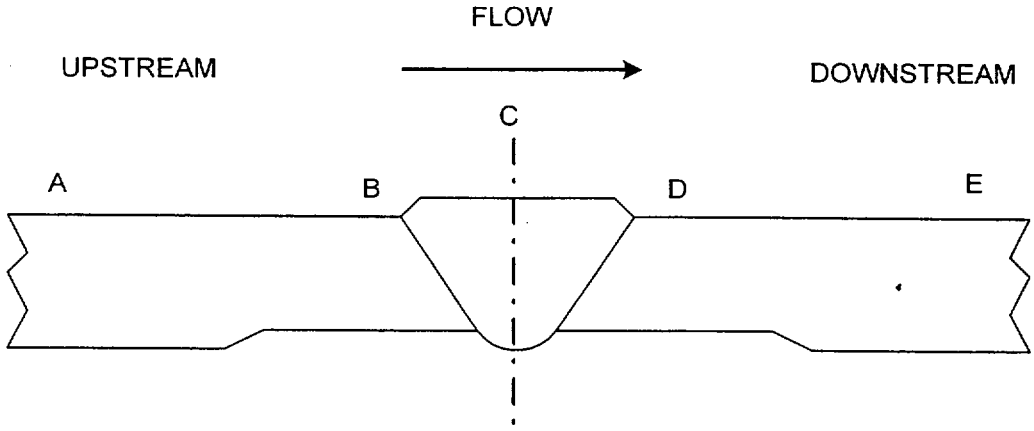

COUNTERBORE Reducer (UPSTREAM) Nozzle (DOWNSTREAM)

REMARKS: N/A

NDE Level II/III Review	Level	Date	Non-Technical Review	Date
J. Eric Aycock	III	5-11-00	[illegible]	5-12-00

ALA2-4350-24R

Sheet No.
S00F1U28~~3~~4 2of2
4GN 5-11-00

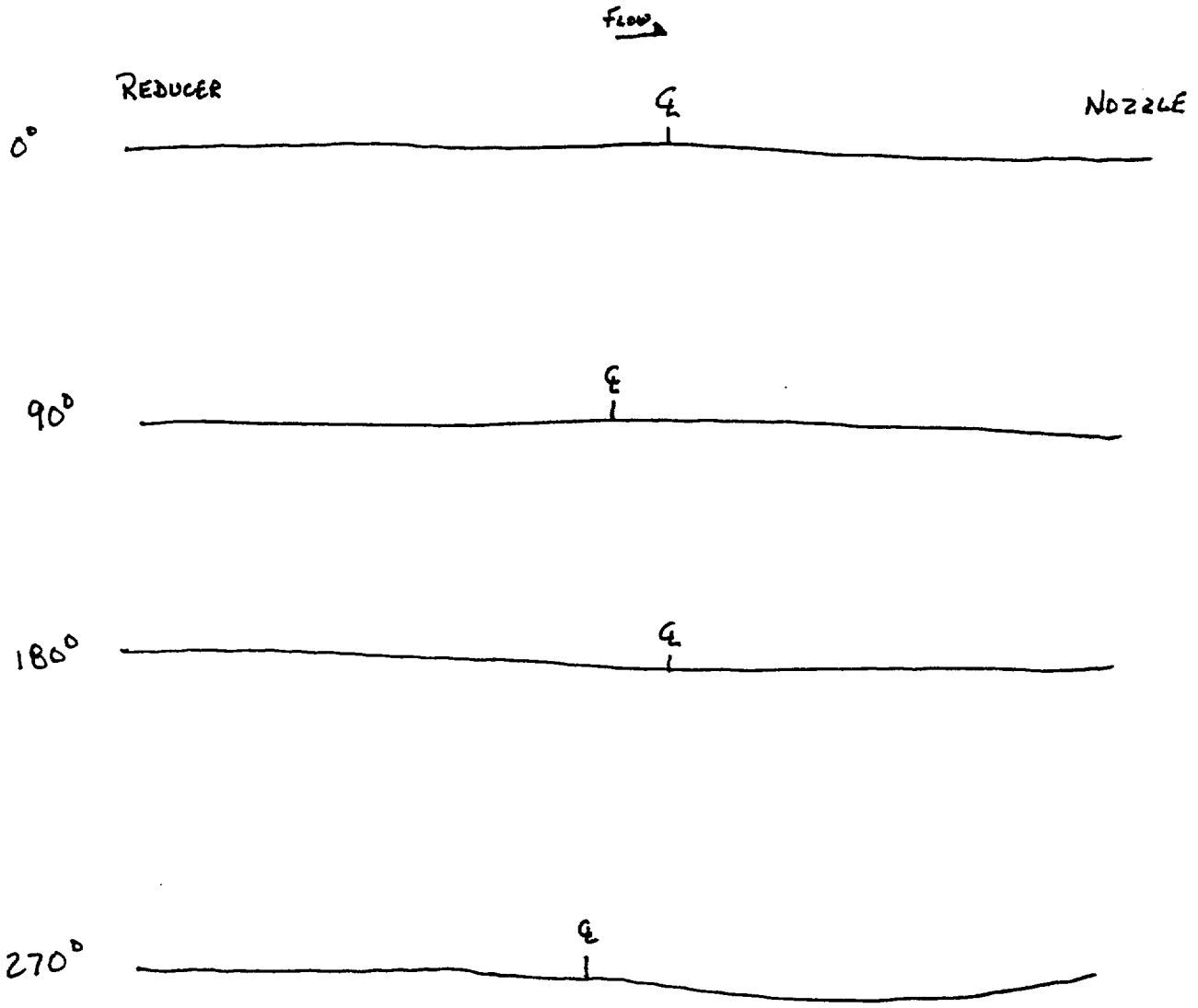

BECHTEL

WP&IR #	NONDESTRUCTIVE EXAMINATION REPORT MAGNETIC PARTICLE EXAMINATION	REPORT #
P-FWC-068		MT-00-137

JOB #	JOB NAME	SURFACE CONDITION	DATE
23734	Farley Unit 1 SGRP	☒ GROUND ☐ AS WELDED	5/10/00

ISO / DWG #	ITEM / COMP ID	TIME OF EXAM	COMPONENT TEMP
FSK-M-150	FW	☐ N/A ☐ PRE-PWHT ☒ POST-PWHT	AMBIENT

CODE / WELD CLASS	COMPONENT CONFIGURATION	MATL TYPE	PROCEDURE & REVISION
ASME XI / CL 2	REDUCER TO NOZZLE	☒ CARBON STEEL	MT-ASME III/XI R/2

EQUIPMENT ☒ YOKE ☒ AC DA-400
☒ CALIBRATION VERIFIED SN-10004
☐ 10 LBS Cal Due 8-17-00

EXAM MEDIUM ☒ DRY ☒ VISIBLE BATCH # 99H114
MANUFACTURER MAGNAFLUX DESIG / COLOR BA RED

INDICATION CODE: NI=NO INDICATIONS NRI=NO RECORDABLE INDICATIONS C=CRACK
ROUND=ROUNDED INDICATION LINEAR=LINEAR INDICATION

PART OR WELD #	ACC (√)	REJ (√)	IND CODE	REMARKS
FW 23-SG R1	✓		NI	NONE

SKETCH / COMMENTS LIFT PLATE # 1058

FNP ISI # ALA2-4350-24R

M&TE NO. N/A

CAL. DUE DATE: N/A

EXAMINER	LEVEL	DATE
Sam Z. Griffin	II	5/10/00
REVIEW		**DATE**
[illegible]	III	5/11/00

J. Eric Aycock L-III 5-11-00

ANI REVIEW: [illegible] 5/12/00

BECHTEL

WPIR #	NONDESTRUCTIVE EXAMINATION REPORT LIQUID PENETRANT EXAMINATION		REPORT #
P-RCA-030			PT-00-142
JOB #	JOB NAME	SURFACE CONDITION	DATE
23734	FARLEY UNIT 1 SGR	☒ GROUND ☐ AS WELDED	4-16-00
ISO / DWG #	ITEM / COMP ID	TIME OF EXAM ☒ N/A	COMPONENT TEMP
FSK-M-144	FW1-SG	☐ PRE-PWHT ☐ POST-PWHT	80°F
CODE / WELD CLASS	COMPONENT CONFIGURATION	MATL TYPE	PROCEDURE & REVISION
ASME XI CL I	HOT LEG / EL TO SAFE-END	☐ C/S ☒ S/S ☐ DISSIM METAL	PT (SR)-ASME III / XI REV. 2

	CLEANER/REMOVER	PENETRANT	DEVELOPER
MFR	MAGNAFLUX	MAGNAFLUX	MAGNAFLUX
TYPE	SKC-S	SKL-SP	SKD-S2
BATCH #	99M01K	98J11K	99G09K

INDICATION CODE: NI=NO INDICATIONS NRI=NO RECORDABLE INDICATIONS C=CRACK
ROUND=ROUNDED INDICATION LINEAR=LINEAR INDICATION

PART OR WELD #	ACC (√)	REJ (√)	IND CODE	REMARKS
FW1-SG	✓		NRI	None
ALAI-4100-4R				

SKETCH / COMMENTS

AREA OF EXAMINATION PERFORMED IN ACCORDANCE WITH ATTACHED SNC DRAWING. AREA EXAMINED INCLUDED FW1-SG AND 3.0" INTO ELBOW FROM NOZZLE SIDE OF EXAMINATION AREA.

M&TE NO. 198060

CAL. DUE DATE: 07-26-00

EXAMINER	LEVEL	DATE
Russell Yancy (Russell Yancy)	II	04-16-00
REVIEW		**DATE**
[illegible]	III	4-17-00

[illegible] SNC Level III 4-20-00

ANII review: [illegible] 4/22/00 CGW 4/22/00

Steam Generator

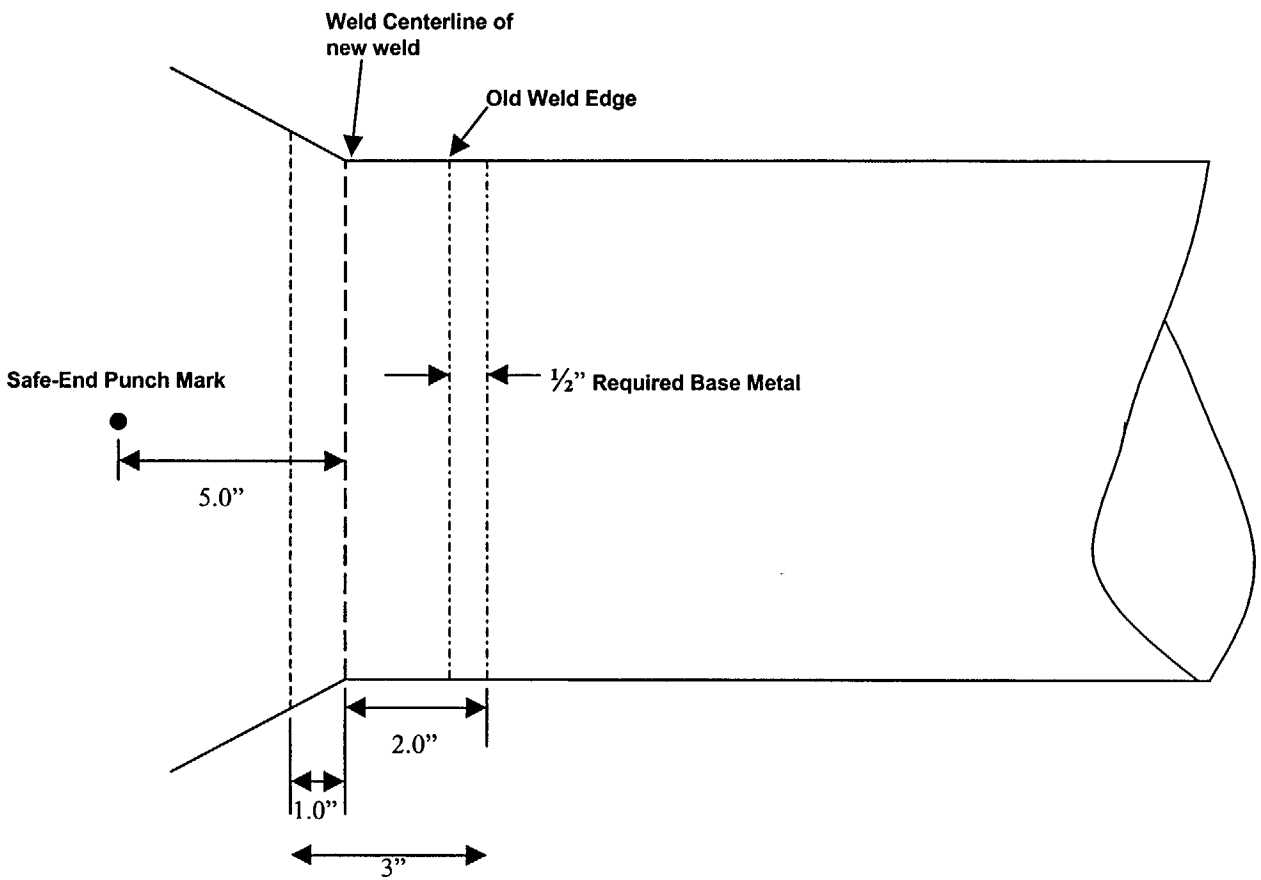

PT Examination of 3" Width will cover all LEGS.

SHARED

FARLEY NUCLEAR PLANT
Ultrasonic Calibration and Examination Record

FNP-0-NDE-100.41
Southern Nuclear Operating Company

Unit	Sketch/Component No.	Date	Sheet No.	
1	ALA1-4100-4R	4/17/00	S00F1U244	Page 1 of 3

Procedure/Rev./TCN	Couplant/Batch No.	Thermometer SN/Cal Due Date	Linearity Sheet No.
FNP-0-NDE-100.41 / 2 / 2A	Ultragel II / 00125	38193 / 8/27/2000	S00F1L001

Instrument			Search Unit		Calibration Block	
Instrument	STAVELEY		Transducer Mfg.	KBA	Cal. Blk. No.	ALA/APR-33
Serial No.	136-896K		Serial No.	D20267/D20268	Thickness	2.45"
	Ax. dB	Circ. dB	Size	N/A	Cal. Temp.	80
Ref.	58	NA	Frequency/Mode	N/A / L	Cal. In	0814
Scan	64	NA	"A" Dimension	.82"	Cal. Chk.	N/A
Reject	OFF		Nominal Angle	45	Cal. Out	1050
Frequency	1.0 MHZ		Measured Angle	45	Ref. Blk. No.	NA
Mode	DUAL		Cable Type	RG 174	Reflector	NA
Damping	500 Ohms		Cable Length	15"	Amplitude/Sweep	NA

Axial Scan Calibration				Circ. Scan Calibration			
Cal. Refl.	Signal Amp.	Sweep Div.	Wmax	Cal. Refl.	Signal Amp.	Sweep Div.	Wmax
1/4	30	1.5	.62	NA	NA	NA	NA
1/2	80	3.0	1.2	NA	NA	NA	NA
3/4	45	4.5	1.85	NA	NA	NA	NA
ID	25	6.1	2.5	NA	NA	NA	NA
				NA	NA	NA	NA

Calibration Remarks:
NO ADDITIONAL DB NEEDED TO RAISE ID NOTCH TO DAC.

Comp. Temp.: 75 °F Configuration: ELBOW TO SAFE-END Wo Location V-STAMP Lo Location TDC

Scan Dir.	Results NI	NRI	RI	Ind. No.	% DAC	Length L1	Lmax	L2	Reference Measurement W1	Wmax	W2	Sweep Position S1	Smax	S2	Thickness 1"<--	C/L	--->1"	Notes:
5		●		NA														

Examination/Limitation Remarks:

EXAMINED FROM ELBOW SIDE.

* Combined Code Coverage from all Scans Hal 4-20-00

Total Length of Weld	Crown Width	Total Length of Weld Examined	Extent of Perpendicular Scans (W)	Extent of Parallel Scans (L)
106.5	2.2	5 (L) NL 2 (L) NA 7 & 8 (W) NA	5 - from NL to .9 2 - from NA to NA	From (5) NA to (2) NA

Primary Examiner	Level	Assistant Examiner	Level	Non-Technical Review	Date
JOHN W. BELL John W Bell	II	GEORGE A. MORINI	II	Terry Styen	4-19-00
SNC NDE Level II/III Review		Date	Percentage of Code Coverage	ANII Review	Date
Danny L. Lifter	III	4-20-00	73.8 %	CG Ward	4/22/00

Figure 1

Revision 7

WELD NO. ALA1-41004R

SHEET No. 5 00 F1 U244

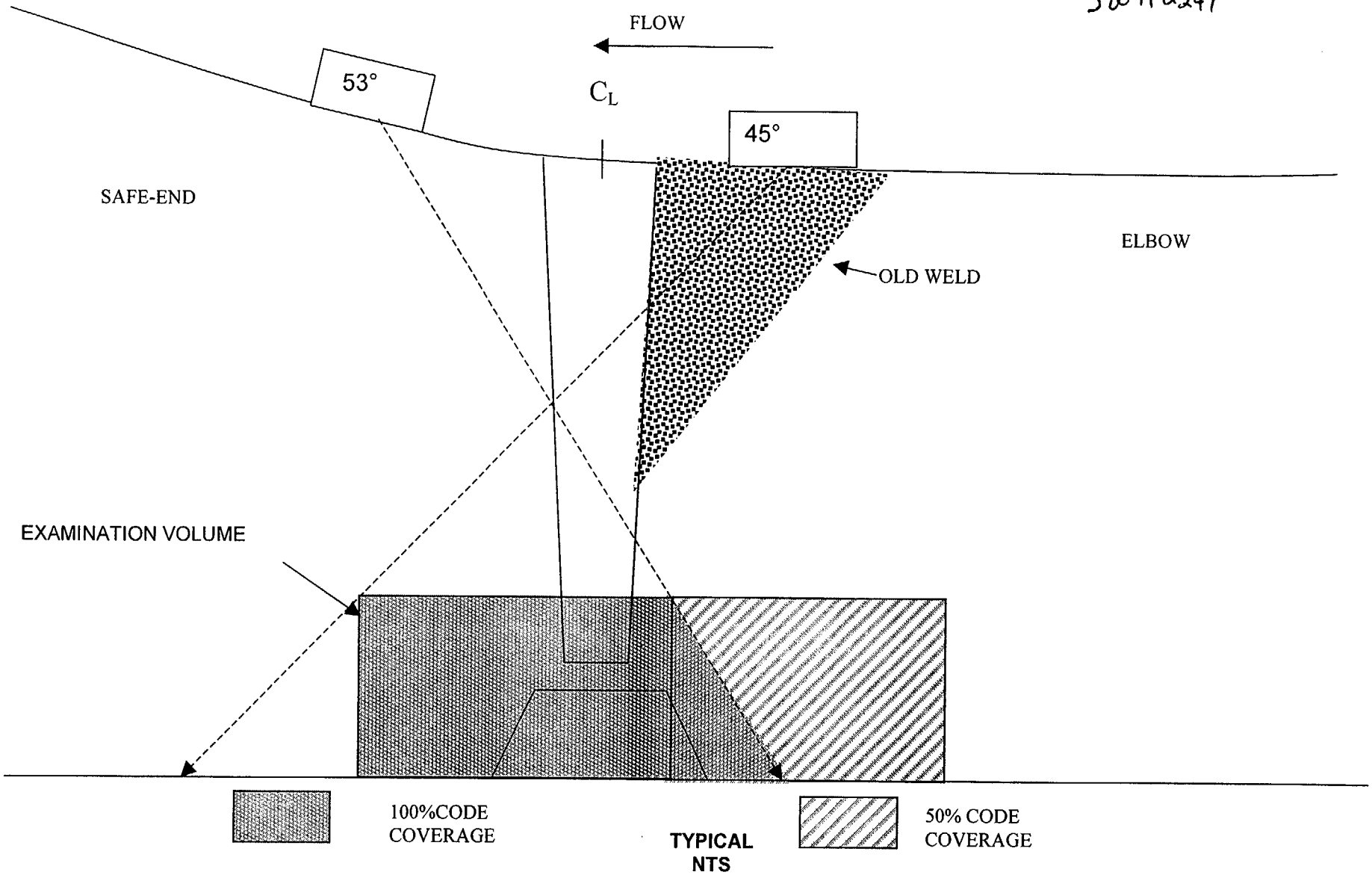

AX CODE COVERAGE PLOT
AX. CODE COVERAGE OBAINED =83.2%
CIRC CODE COVERAGE OBAINED =64.5%
TOTAL CODE COVERAGE OBAINED =73.8%
SEE PAGE 3 OF 3 FOR CIRC CODE COVERAGE PLOT

WELD NO. ALA1-41004R

SHEET No. 500F1U244

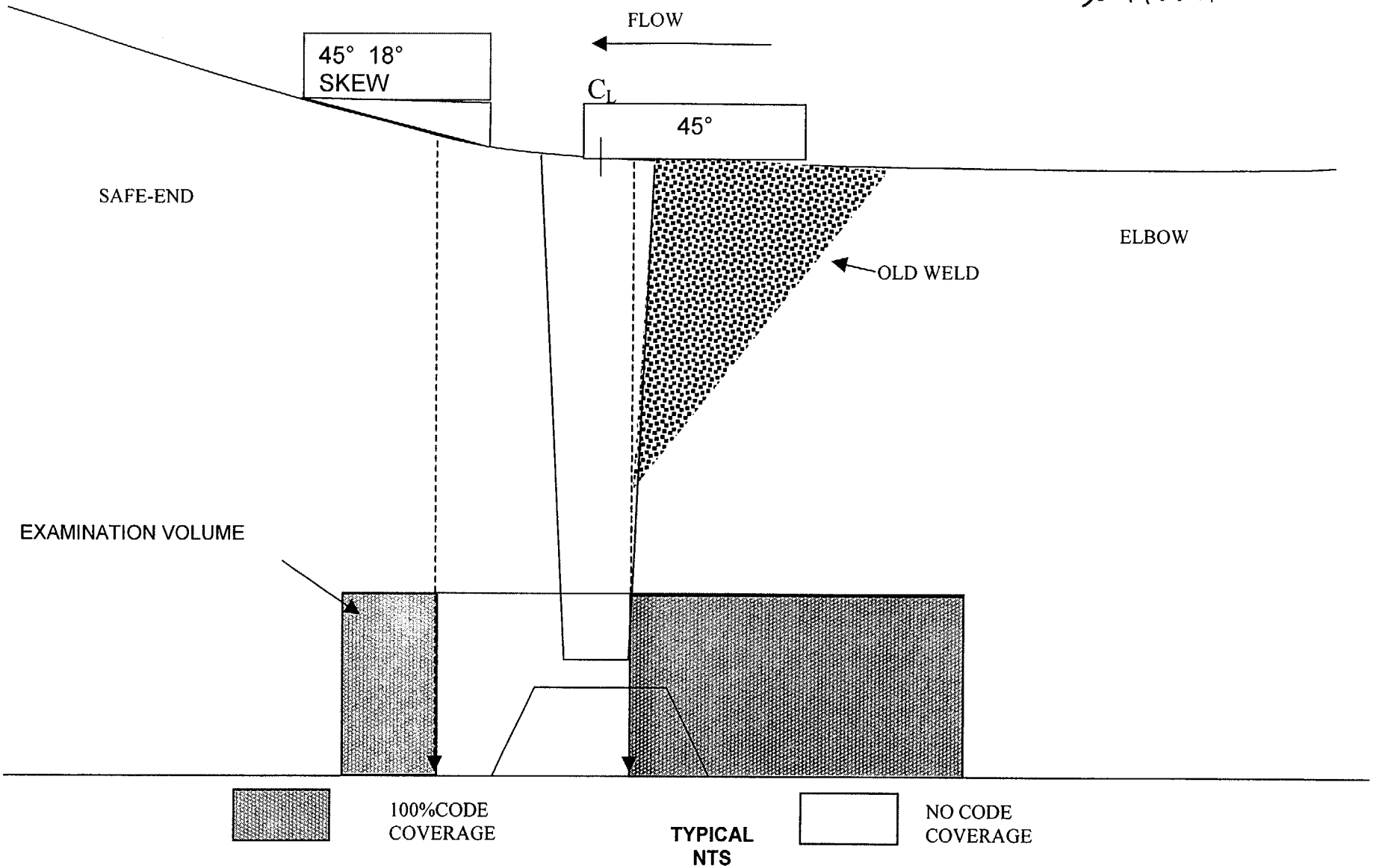

CIRC CODE COVERAGE PLOT
CIRC CODE COVERAGE OBAINED =64.5%
AX. CODE COVERAGE OBAINED =83.2%
TOTAL CODE COVERAGE OBAINED =73.8%
SEE PAGE 3 OF 3 FOR CIRC CODE COVERAGE PLOT

SHARED

FARLEY NUCLEAR PLANT
Ultrasonic Calibration and Examination Record

FNP-0-NDE-100.41
Southern Nuclear Operating Company

Unit	Sketch/Component No.	Date	Sheet No.
1	ALA1-4100-4R	4/17/00	S00F1U236

Page 1 of 1

Procedure/Rev./TCN	Couplant/Batch No.	Thermometer SN/Cal Due Date	Linearity Sheet No.
FNP-0-NDE-100.41 / 2 / 2A	Ultragel II / 00125	38193 / 8/27/2000	S00F1L001

Instrument			Search Unit		Calibration Block	
Instrument	STAVELEY		Transducer Mfg.	KBA	Cal. Blk. No.	ALA-52
Serial No.	136-896K		Serial No.	G14510 / G14511	Thickness	3.5"
	Ax. dB	Circ. dB	Size	2 (1.0")	Cal. Temp.	71
Ref.	NA	71.2	Frequency/Mode	1.0 / L	Cal. In	0705
Scan	NA	77.2	"A" Dimension	.82"	Cal. Chk.	N/A
Reject	OFF		Nominal Angle	45	Cal. Out	1135
Frequency	1.0 MHZ		Measured Angle	45	Ref. Blk. No.	N/A
Mode	DUAL		Cable Type	RG 174	Reflector	N/A
Damping	500 Ohms		Cable Length	15"	Amplitude/Sweep	N/A

Axial Scan Calibration				Circ. Scan Calibration			
Cal. Refl.	Signal Amp.	Sweep Div.	Wmax	Cal. Refl.	Signal Amp.	Sweep Div.	Wmax
NA	NA	NA	NA	1/4	40	1.5	.75
NA	NA	NA	NA	1/2	80	3.0	1.8
NA	NA	NA	NA	3/4	65	4.5	2.9
NA	NA	NA	NA	ID	25	6.2	3.9
NA	NA1	NA	NA				

Calibration Remarks:
2.6 dB ADDED TO RAISE ID NOTCH TO DAC, (68.6 + 2.6 = 71.2). 18° TILT WEDGE USED FOR EXIMINATION, CALIBRATED WITH NORMAL WEDGES.

Comp. Temp.: 75 °F Configuration: ELBOW TO SAFE-END Wo Location V-STAMP Lo Location TDC

Scan Dir.	Results NI	NRI	RI	Ind. No.	% DAC	Length L1	Lmax	L2	Reference Measurement W1	Wmax	W2	Sweep Position S1	Smax	S2	Thickness 1"< --	C/L	-- >1"	Notes:
7	●			NA	NA													

Examination/Limitation Remarks:

EXAMINED FROM SAFE-END SIDE.

*Combined Code Coverage from all Scans Gal 4-20-00

Total Length of Weld	Crown Width	Total Length of Weld Examined	Extent of Perpendicular Scans (W)	Extent of Parallel Scans (L)
106.5	2.2	5 (L) NA 2 (L) ____ 7 & 8 (W) NL	5 - from NA to NA 2 - from NA to NA	From (5) -1.85 to (2) NL

Primary Examiner	Level	Assistant Examiner	Level	Non-Technical Review	Date
JOHN W. BELL John W Bell	II	GEORGE A. MORINI	II	Terry Styer	4-19-00

SNC NDE Level II/III Review		Date	Percentage of Code Coverage	ANII Review	Date
Danny R. Griffin	III	4-20-00	* 73.8 %	CGWarnell	4/22/00

Figure 1

Revision 7

SHARED

FARLEY NUCLEAR PLANT
Ultrasonic Calibration and Examination Record

FNP-0-NDE-100.41
Southern Nuclear Operating Company

Unit	Sketch/Component No.	Date	Sheet No.
1	ALA1-4100-4R	4/17/00	S00F1U239

Page 1 of 1

Procedure/Rev./TCN	Couplant/Batch No.	Thermometer SN/Cal Due Date	Linearity Sheet No.
FNP-0-NDE-100.41 / 2 / 2A	Ultragel II / 00125	38193 / 8/27/2000	S00F1L001

Instrument		Search Unit		Calibration Block	
Instrument	STAVELEY	Transducer Mfg.	KBA	Cal. Blk. No.	ALA-52
Serial No.	136-896K	Serial No.	H12393/H12394	Thickness	3.5"
	Ax. dB / Circ. dB	Size	2 (1.0")	Cal. Temp.	71
Ref.	NA / 70.4	Frequency/Mode	1.0 / L	Cal. In	0715
Scan	NA / 76.4	"A" Dimension	.82"	Cal. Chk.	N/A
Reject	OFF	Nominal Angle	45	Cal. Out	1125
Frequency	1.0 MHZ	Measured Angle	45	Ref. Blk. No.	NA
Mode	DUAL	Cable Type	RG 174	Reflector	NA
Damping	500 Ohms	Cable Length	15"	Amplitude/Sweep	NA

Axial Scan Calibration				Circ. Scan Calibration			
Cal. Refl.	Signal Amp.	Sweep Div.	Wmax	Cal. Refl.	Signal Amp.	Sweep Div.	Wmax
NA	NA	NA	NA	1/4	40	1.5	.75
NA	NA	NA	NA	1/2	80	3.0	1.8
NA	NA	NA	NA	3/4	65	4.5	2.9
NA	NA	NA	NA	ID	20	6.2	3.9
NA	NA	NA	NA				

Calibration Remarks:
NO ADDITIONAL DB NEEDED TO RAISE ID NOTCH TO DAC. 18° TILT WEDGE USED FOR EXIMINATION, CALIBRATED WITH NORMAL WEDGES.

Comp. Temp.: 75 °F Configuration: ELBOW TO SAFE-END Wo Location V-STAMP Lo Location TDC

Scan Dir.	Results NI	NRI	RI	Ind. No.	% DAC	Length L1	Lmax	L2	Reference Measurement W1	Wmax	W2	Sweep Position S1	Smax	S2	Thickness 1"<--	C/L	-->1"	Notes:
8		●		NA														

Examination/Limitation Remarks:

EXAMINED FROM SAFE-END SIDE. *Combined Code Coverage from all scans Hal 4-20-00

Total Length of Weld	Crown Width	Total Length of Weld Examined	Extent of Perpendicular Scans (W)	Extent of Parallel Scans (L)
106.5	2.2"	5 (L) NA 2 (L) NA 7 & 8 (W) NL	5 - from NA to NA 2 - from NA to NA	From (5) -1.85 to (2) NL

Primary Examiner	Level	Assistant Examiner	Level	Non-Technical Review	Date
JOHN W. BELL John W Bell	II	GEORGE A. MORINI	II	Terry Styen	4-19-00

SNC NDE Level II/III Review		Date	Percentage of Code Coverage	ANII Review	Date
Harry D. Stokes	III	4-20-00	* 73.8 %	C Gaw	4/22/00

Figure 1

Revision 7

SHARED

FARLEY NUCLEAR PLANT
Ultrasonic Calibration and Examination Record

FNP-0-NDE-100.41
Southern Nuclear Operating Company

Unit	Sketch/Component No.	Date	Sheet No.
1	ALA1-4100-4R	4/17/00	S00F1U242

Page 1 of 2

Procedure/Rev./TCN	Couplant/Batch No.	Thermometer SN/Cal Due Date	Linearity Sheet No.
FNP-0-NDE-100.41 / 2 / 2A	Ultragel II / 00125	38193 / 8/27/2000	S00F1L001

Instrument		Search Unit		Calibration Block	
Instrument	STAVELEY	Transducer Mfg.	KBA	Cal. Blk. No.	ALA-52
Serial No.	136-896K	Serial No.	008NXT/008NXW	Thickness	3.5"
	Ax. dB / Circ. dB	Size	2 (1.0")	Cal. Temp.	71
Ref.	66 / NA	Frequency/Mode	1.0 / L	Cal. In	0730
Scan	72 / NA	"A" Dimension	.82"	Cal. Chk.	N/A
Reject	OFF	Nominal Angle	53	Cal. Out	1115
Frequency	1.0 MHZ	Measured Angle	53	Ref. Blk. No.	NA
Mode	DUAL	Cable Type	RG 174	Reflector	NA
Damping	500 Ohms	Cable Length	15"	Amplitude/Sweep	NA

Axial Scan Calibration				Circ. Scan Calibration			
Cal. Refl.	Signal Amp.	Sweep Div.	Wmax	Cal. Refl.	Signal Amp.	Sweep Div.	Wmax
1/4	80	1.5	1.2	NA	NA	NA	NA
1/2	70	3.0	1.95	NA	NA	NA	NA
3/4	40	4.5	2.95	NA	NA	NA	NA
ID	15	6.0	4.2	NA	NA	NA	NA
				NA	NA	NA	NA

Calibration Remarks:
NO ADDITIONAL dB NEEDED TO RAISE NOTCH TO DAC.

Comp. Temp.: 75 °F Configuration: ELBOW TO SAFE-END

Wo Location V-STAMP Lo Location TDC

Scan Dir.	Results NI	NRI	RI	Ind. No.	% DAC	Length L1	Lmax	L2	Reference Measurement W1	Wmax	W2	Sweep Position S1	Smax	S2	Thickness 1"<--	C/L	--->1"	Notes:
2		●		NA	NA													

Examination/Limitation Remarks:

EXAMINED FROM SAFE-END SIDE.

*Combined Code Coverage from all scans Bal 4-20-00

Total Length of Weld	Crown Width	Total Length of Weld Examined	Extent of Perpendicular Scans (W)	Extent of Parallel Scans (L)
106.5	2.2	5 (L) NA 2 (L) NL 7 & 8 (W) NA	5 - from NA to NA	2 - from NL to .9 From (5) NA to (2) NA

Primary Examiner	Level	Assistant Examiner	Level	Non-Technical Review	Date
JOHN W. BELL John W Bell	II	GEORGE A. MORINI	II	Terry Styen	4-19-00

SNC NDE Level II/III Review	Date	Percentage of Code Coverage	ANII Review	Date
Barry A. Jeffries III	4-20-00	*73.8 %	CG Wood	4/22/00

Figure 1

Revision 7

April 19, 2000
ASME Code Coverage for Steam Generator Hot Leg /Cold Leg

The following list is the numeric values assigned based on the OD profile and contour taken from A Loop. One dimension is provided which includes the new narrow groove weld and a portion of the old existing weld. The drawing to be used has a thickness of 3.3". The inner 1/3t dimension to be used will be 1.1". The width is based on the toe of the ID weld from the safe end side to the toe of the old existing OD weld, which measures 2.1".

AXIAL SCANS
Code requires .25" on each side of the above described weld toes.
Code coverage = 2.6" (width) x 1.1" (height) = 2.86 sq. "
Scan from elbow side: no limitations, 2.86sq "/ 2.86 sq. " = 100%
Scan from safe end side: limited due to taper / apex, two areas,
Box 1.35" x 1.1" = 1.485 sq. "
Triangle ½ x b x h = .5x.75"x1.1"= .413 sq. "
Total = 1.898 sq. " / 2.86 sq. " = 66.3%

CIRC. SCANS
Code requires .5" on each side of the above described weld toes.
Code coverage = 3.1" (width) x 1.1" (height) = 3.41 sq. "
Scan from safe end CW direction: .35" (width) x 1.1" (height) = .38 sq. "
Scan from elbow side CW direction: 1.65 " (width) x 1.1" (height) = 1.815 sq. "
Total = 2.2 sq. " / 3.41 sq. " = 64.5%

Scan from safe end CCW direction: .35" (width) x 1.1" (height) = .38 sq. "
Scan from elbow side CCW direction: 1.65 " (width) x 1.1" (height) = 1.815 sq. "
Total = 2.2 sq. " / 3.41 sq. " = 64.5%

Total ASME Code Coverage for the Weld is 73.8%. This is based on adding all four required scans, 100% + 66.3% + 64.5% + 64.5% = 295.3%
295.3/4 = 73.8%

NOTE: The coverage for the CW / CCW scans was not based on the centerline of the two transducers, but the centerline of one of the dual elements. ASME Section XI, Appendix III-2410(a) requires a 50% overlap between scans. Smaller transducers were tried to obtain maximum code coverage. Due to the metallurgical grain structure of the materials, a dual, 1.0 MHz, 1" diameter, transducer with curved shoes was used. On the safe end, wedges with an 18-degree tilt were used for the CW/CCW scans. The maximum area that could be scanned was examined. Supplement 4, (a) (1) of ASME Section XI requires a 35-degree or greater for the beam angle at the ID surface when using refracted Longitudinal waves. Only one direction coverage of the axial scan on the elbow side was obtained. RL waves are used with a 4/8-node calibration. Shear waves to provide a 6/8 vee-path is not practical for the cast stainless steel examination on the elbow. Thus we were limited to 66.3% from this direction.

SHARED

FARLEY NUCLEAR PLANT
Ultrasonic Calibration and Examination Record

FNP-0-NDE-100.41
Southern Nuclear Operating Company

Unit	Sketch/Component No.	Date	Sheet No.	Page / of /
1	ALA1-4100-4R	4/17/00	S00F1U240	

Procedure/Rev./TCN	Couplant/Batch No.	Thermometer SN/Cal Due Date	Linearity Sheet No.
FNP-0-NDE-100.41 / 2 / 2A	Ultragel II / 00125	38193 / 8/27/2000	S00F1L001

Instrument		Search Unit		Calibration Block	
Instrument	STAVELEY	Transducer Mfg.	N/A	Cal. Blk. No.	ALA/APR-33
Serial No.	136-896K	Serial No.	008NXR/008NXV	Thickness	2.45"
	Ax. dB / Circ. dB	Size	2 (1.0")	Cal. Temp.	81
Ref.	NA / 71.2	Frequency/Mode	1.0 / L	Cal. In	0820
Scan	NA / 77.2	"A" Dimension	.82"	Cal. Chk.	N/A
Reject	OFF	Nominal Angle	45	Cal. Out	1055
Frequency	1.0 MHZ	Measured Angle	46	Ref. Blk. No.	NA
Mode	DUAL	Cable Type	RG 174	Reflector	NA
Damping	500 Ohms	Cable Length	15"	Amplitude/Sweep	NA

Axial Scan Calibration				Circ. Scan Calibration			
Cal. Refl.	Signal Amp.	Sweep Div.	Wmax	Cal. Refl.	Signal Amp.	Sweep Div.	Wmax
NA	NA	NA	NA	1/4	30	1.5	.65
NA	NA	NA	NA	1/2	80	3.0	1.3
NA	NA	NA	NA	3/4	50	4.5	1.9
NA	NA	NA	NA	ID	35	5.8	2.65
NA	NA	NA	NA				

Calibration Remarks:
NO ADDITIONAL dB NEEDED TO RAISE NOTCH TO DAC.

Comp. Temp.: 75 °F Configuration: ELBOW TO SAFE-END Wo Location V-STAMP Lo Location TDC

Scan Dir.	Results NI	NRI	RI	Ind. No.	% DAC	Length L1	Lmax	L2	Reference Measurement W1	Wmax	W2	Sweep Position S1	Smax	S2	Thickness 1"<--	C/L	-->1"	Notes:
7		●		NA	NA													
8		●		NA	NA													

Examination/Limitation Remarks:

EXAMINED FROM ELBOW SIDE. *NO ADDITIONAL dB NEEDED TO RAISE NOTCH TO DAC.
** Combined Code Coverage from all scans Hal 4-20-00

Total Length of Weld	Crown Width	Total Length of Weld Examined	Extent of Perpendicular Scans (W)	Extent of Parallel Scans (L)
106.5	2.2	5 (L) NA 2 (L) NA 7 & 8 (W) NL	5 - from NA to NA 2 - from NA to NA	From (5) NL to (2) -1.3

Primary Examiner	Level	Assistant Examiner	Level	Non-Technical Review	Date
JOHN W. BELL John W Bell	II	GEORGE A. MORINI	II	Terry Styer	4-19-00

SNC NDE Level II/III Review	Date	Percentage of Code Coverage	ANII Review	Date
Henry L. Rafter III	4-20-00	** 73.8 %	C G Wood	4/22/00

Figure 1

Revision 7

Ultrasonic Thickness and Contour Examination Record — **Southern Nuclear Operating Company**

Unit	Weld Number	Sheet No.	Date
1	ALA1-4100-4R	S00F1U247	4/17/2000

SO/Drawing Number	Couplant/Batch Number	Instrument Manufacturer
ALA1-4100	ULTRAGEL II / 00125	STAVELEY

Material Type	Calibration Standard/ Serial No.	Model Number	Serial Number
☐ C/S ☐ S/S Other	SS IIW / 86-4245	SONIC 136	136-896K

Examiner	SNT Level	Transducer Manufacturer	Type	Size
JOHN W. BELL John W Bell	II	KBA	~~Ref~~ ~~NA~~ 0° 4-20-00	.75

Examiner	SNT Level	Serial Number	Frequency
GEORGE A. MORINI	II	B25613	1.0 MHz

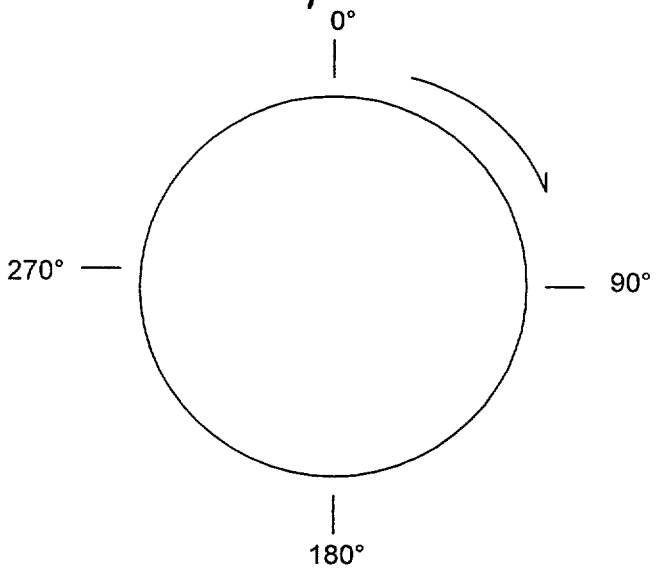

Location	0°	90 °	180°	270°
A	3.1	3.1	3.1	3.1
B	3.4	3.4	3.3	3.3
C	3.25	3.2	3.3	3.3
D	3.3	3.25	3.3	3.3
E	3.9	3.85	3.85	3.7

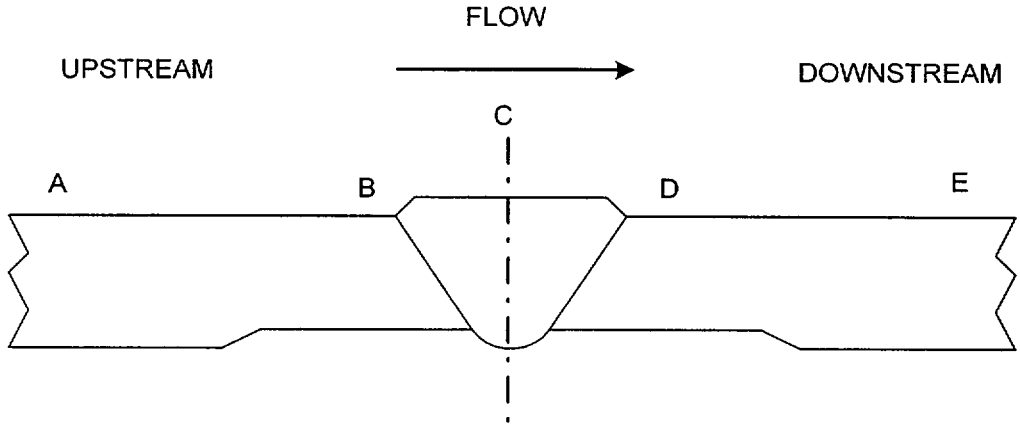

COUNTERBORE

NA	NA
UPSTREAM	DOWNSTREAM

REMARKS:

NDE Level II/III Review	Level	Date	Non-Technical Review	Date
[signature]	III	4-2000	Terry Styen	4-19-00

Revision 1

A HOT LEG

SHEET NO. S00F1U247

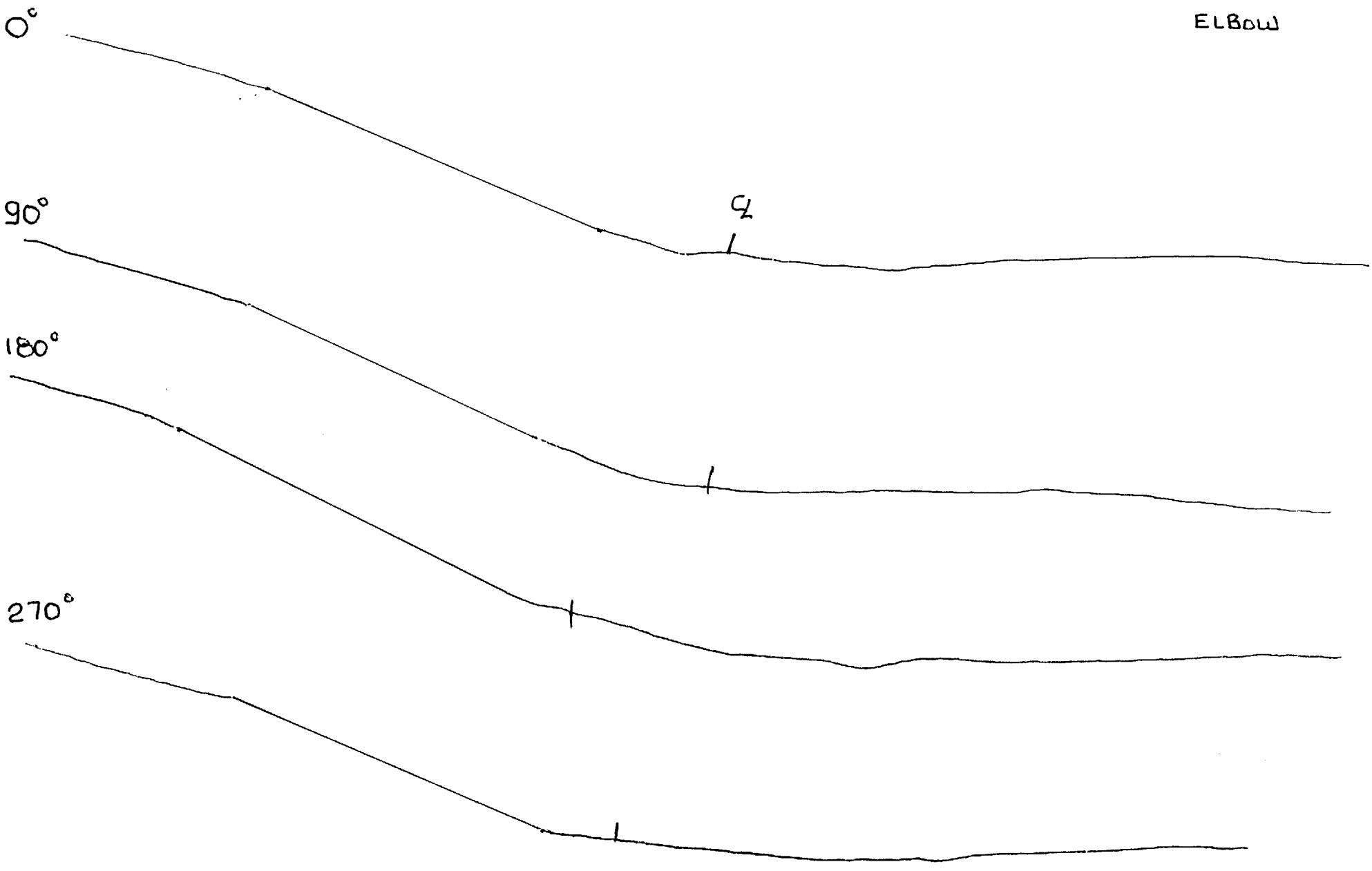

BECHTEL

WPIR #	NONDESTRUCTIVE EXAMINATION REPORT LIQUID PENETRANT EXAMINATION		REPORT #
P-RCA-030			PT-00-141
JOB # 23734	JOB NAME FARLEY UNIT 1 SGR	SURFACE CONDITION ☒ GROUND ☐ AS WELDED	DATE 4-16-00
ISO / DWG # FSK-M-144	ITEM / COMP ID FW2-SG	TIME OF EXAM ☒ N/A ☐ PRE-PWHT ☐ POST-PWHT	COMPONENT TEMP 80°F
CODE / WELD CLASS ASME XI CL I	COMPONENT CONFIGURATION COLD LEG / SAFE-END TO EL	MATL TYPE ☐ C/S ☒ S/S ☐ DISSIM METAL	PROCEDURE & REVISION PT (SR)-ASME III / XI REV. 2

	CLEANER/REMOVER	PENETRANT	DEVELOPER
MFR	MAGNAFLUX	MAGNAFLUX	MAGNAFLUX
TYPE	SKC-S	SKL-SP	SKD-S2
BATCH #	99M01K	98J11K	99G09K

INDICATION CODE: NI=NO INDICATIONS NRI=NO RECORDABLE INDICATIONS C=CRACK ROUND=ROUNDED INDICATION LINEAR=LINEAR INDICATION

PART OR WELD #	ACC (√)	REJ (√)	IND CODE	REMARKS
FW2-SG	✓		NRI	None
ALAI-4100-5R				

SKETCH / COMMENTS

AREA OF EXAMINATION PERFORMED IN ACCORDANCE WITH ATTACHED SNC DRAWING. AREA EXAMINED INCLUDED FW2-SG AND 3.0" INTO ELBOW FROM NOZZLE SIDE OF EXAMINATION AREA.

M&TE NO. 198060

CAL. DUE DATE: 07-26-00

EXAMINER	LEVEL	DATE
Russell Yancy (Russell Yancy)	II	04-16-00
REVIEW		**DATE**
[illegible]	III	4-17-00

Gary A. Hopkins SNC Level III 4-20-00
ANII REVIEW: [illegible] 4/22/00

Steam Generator

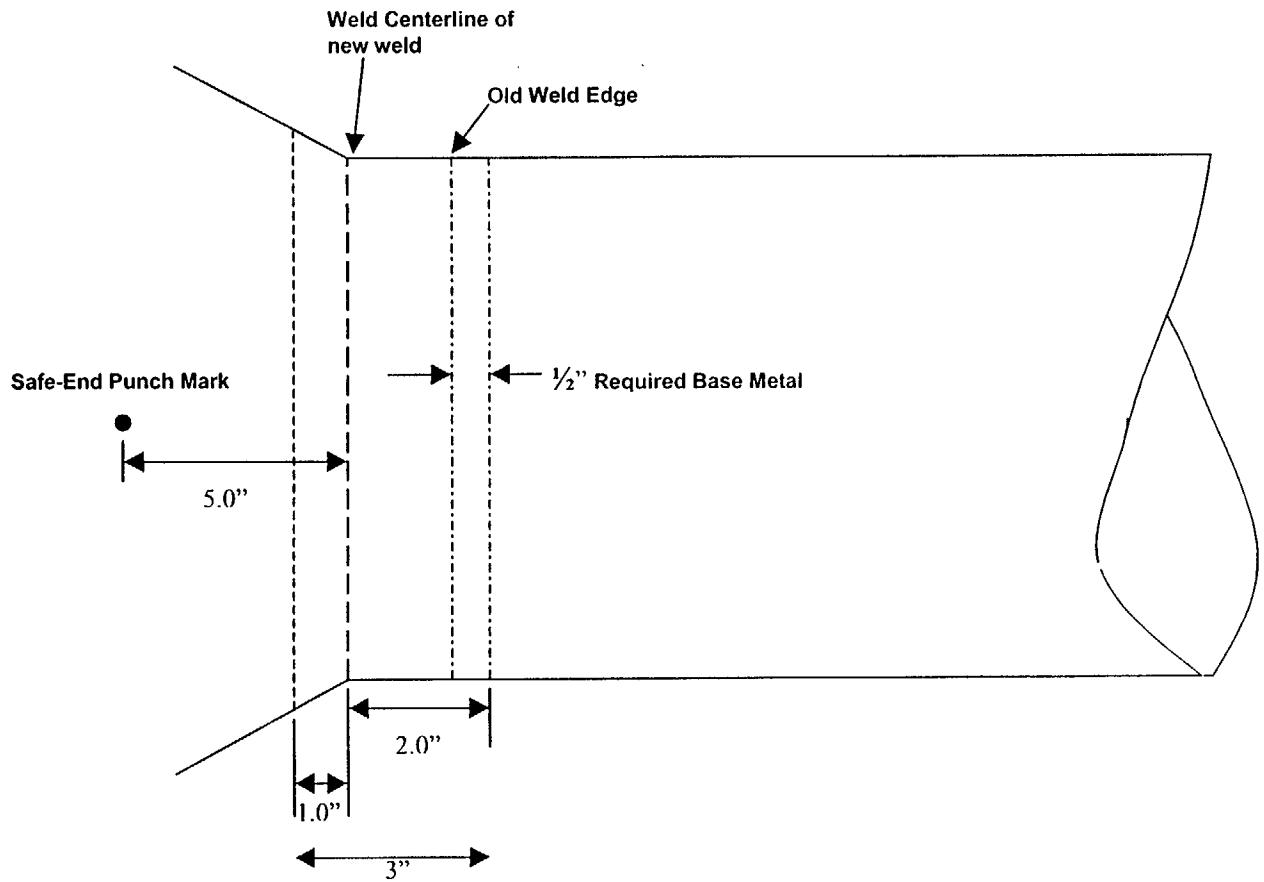

PT Examination of 3" Width will cover all LEGS.

SHARED

FARLEY NUCLEAR PLANT
Ultrasonic Calibration and Examination Record

FNP-0-NDE-100.41
Southern Nuclear Operating Company

Unit	Sketch/Component No.	Date	Sheet No.
1	ALA1-4100-5R	4/17/00	S00F1U245

Page 1 of 3

Procedure/Rev./TCN	Couplant/Batch No.	Thermometer SN/Cal Due Date	Linearity Sheet No.
FNP-0-NDE-100.41 / 2 / 2A	Ultragel II / 00125	38193 / 8/27/2000	S00F1L001

Instrument			Search Unit		Calibration Block	
Instrument	STAVELEY		Transducer Mfg.	KBA	Cal. Blk. No.	ALA/APR-33
Serial No.	136-896K		Serial No.	D20267/D20268	Thickness	2.45"
	Ax. dB	Circ. dB	Size	2 (1.0")	Cal. Temp.	80
Ref.	58	NA	Frequency/Mode	1.0 / L	Cal. In	0814
Scan	64	NA	"A" Dimension	.82"	Cal. Chk.	N/A
Reject	OFF		Nominal Angle	45	Cal. Out	1050
Frequency	1.0 MHZ		Measured Angle	45	Ref. Blk. No.	NA
Mode	DUAL		Cable Type	RG 174	Reflector	NA
Damping	500 Ohms		Cable Length	15"	Amplitude/Sweep	NA

Axial Scan Calibration				Circ. Scan Calibration			
Cal. Refl.	Signal Amp.	Sweep Div.	Wmax	Cal. Refl.	Signal Amp.	Sweep Div.	Wmax
1/4	30	1.5	.62	NA	NA	NA	NA
1/2	80	3.0	1.2	NA	NA	NA	NA
3/4	45	4.5	1.85	NA	NA	NA	NA
ID	25	6.1	2.5	NA	NA	NA	NA
				NA	NA	NA	NA

Calibration Remarks:
NO ADDITIONAL DB NEEDED TO RAISE ID NOTCH TO DAC.

Comp. Temp.: 75 °F Configuration: SAFE-END TO ELBOW Wo Location V-STAMP Lo Location TDC

Scan Dir.	Results NI	NRI	RI	Ind. No.	% DAC	Length L1	Lmax	L2	Reference Measurement W1	Wmax	W2	Sweep Position S1	Smax	S2	Thickness 1"<--	C/L	--->1"	Notes:
2		●		NA														

Examination/Limitation Remarks:

EXAMINED FROM ELBOW SIDE.

*Combined Code Coverage from all scans Dal 4-20-00

Total Length of Weld	Crown Width	Total Length of Weld Examined	Extent of Perpendicular Scans (W)	Extent of Parallel Scans (L)
106.5	2.2	5 (L) NA 2 (L) NL 7 & 8 (W) NA	5 - from NA to NA 2 - from NL to .9	From (5) NA to (2) NA

Primary Examiner	Level	Assistant Examiner	Level	Non-Technical Review	Date
JOHN W. BELL John W Bell	II	GEORGE A. MORINI	II	Terry Styer	4-19-00

SNC NDE Level II/III Review		Date	Percentage of Code Coverage	ANII Review	Date
Donald L. Lightsey	III	4-20-00	73.8 %		4/22/00

Figure 1

Revision 7

WELD NO. ALA1-41005R SHEET No. 500 F1 4245

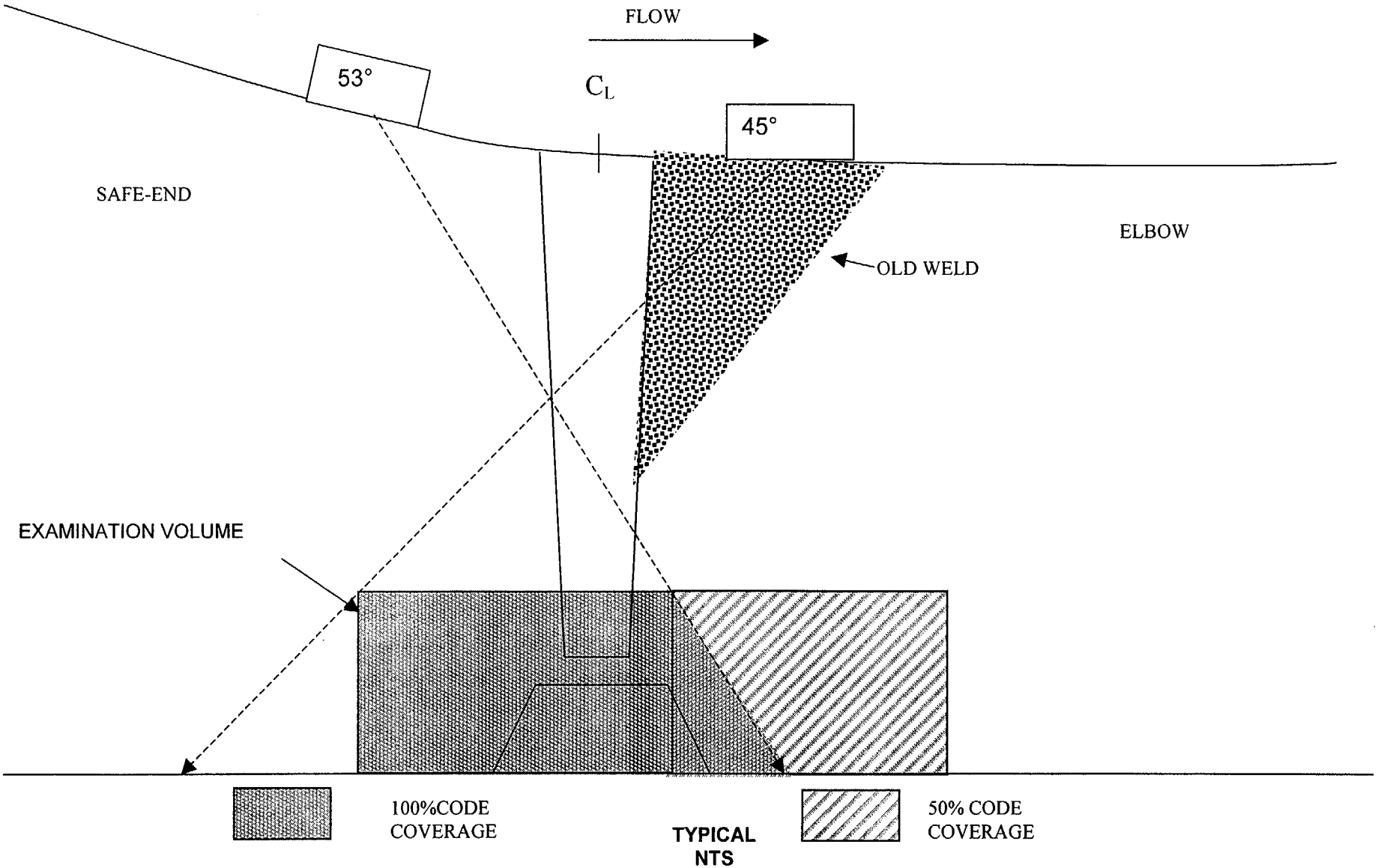

AX CODE COVERAGE PLOT
AX. CODE COVERAGE OBAINED =83.2%
CIRC CODE COVERAGE OBAINED =64.5%
TOTAL CODE COVERAGE OBAINED =73.8%
SEE PAGE 3 OF 3 FOR CIRC CODE COVERAGE PLOT

WELD NO. ALA1-41005R SHEET No. 5004U245

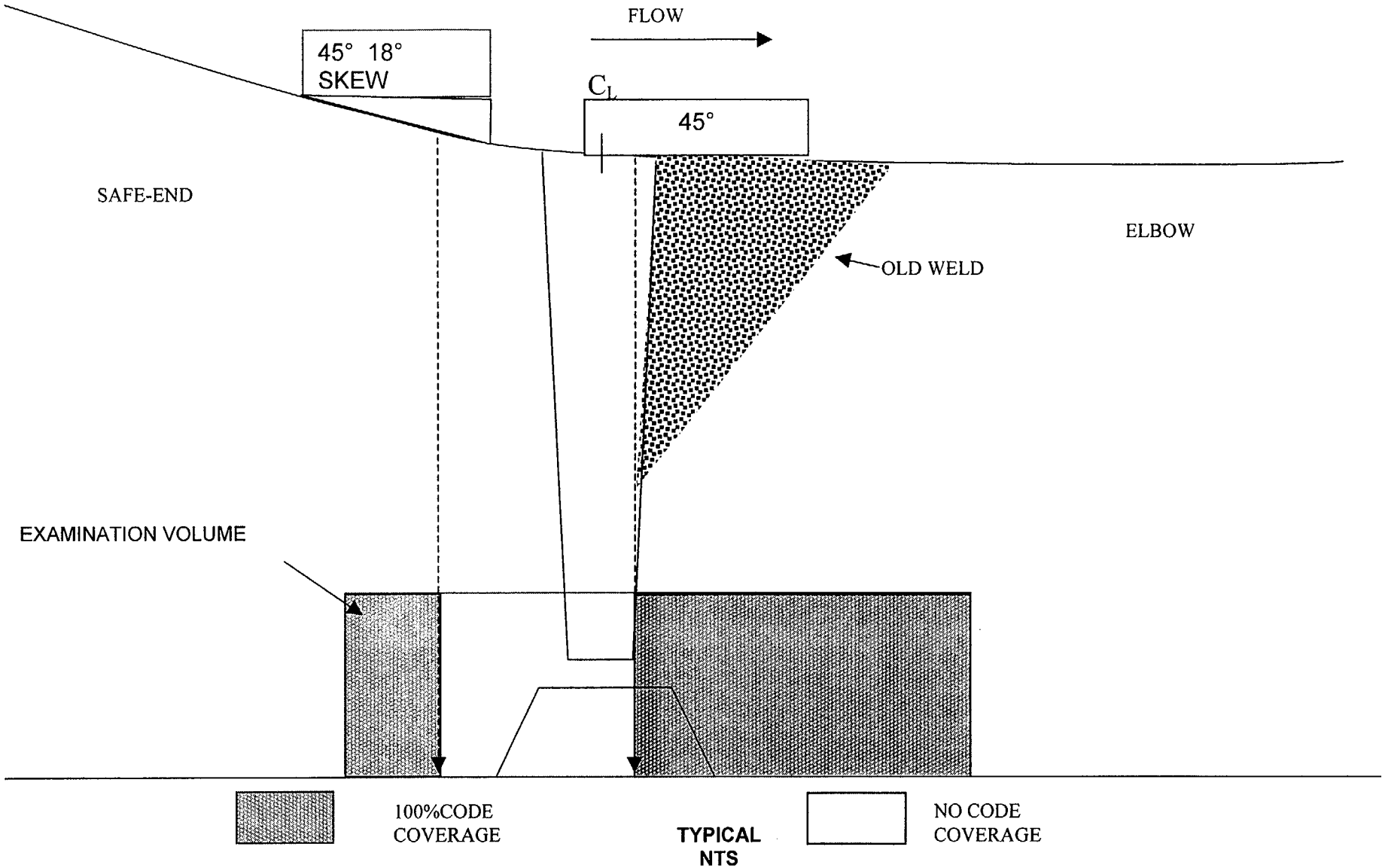

CIRC CODE COVERAGE PLOT
CIRC CODE COVERAGE OBAINED =64.5%
AX. CODE COVERAGE OBAINED =83.2%
TOTAL CODE COVERAGE OBAINED =73.8%
SEE PAGE 3 OF 3 FOR CIRC CODE COVERAGE PLOT

SHARED

FARLEY NUCLEAR PLANT
Ultrasonic Calibration and Examination Record

FNP-0-NDE-100.41
Southern Nuclear Operating Company

Unit	Sketch/Component No.	Date	Sheet No.	
1	ALA1-4100-5R	4/17/00	S00F1U238	Page 1 of 1

Procedure/Rev./TCN	Couplant/Batch No.	Thermometer SN/Cal Due Date	Linearity Sheet No.
FNP-0-NDE-100.41 / 2 / 2A	Ultragel II / 00125	38193 / 8/27/2000	S00F1L001

Instrument			Search Unit		Calibration Block	
Instrument	STAVELEY		Transducer Mfg.	KBA	Cal. Blk. No.	ALA-52
Serial No.	136-896K		Serial No.	H12393/H12394	Thickness	3.5"
	Ax. dB	Circ. dB	Size	2 (1.0")	Cal. Temp.	71
Ref.	NA	70.4	Frequency/Mode	1.0 / L	Cal. In	0715
Scan	NA	76.4	"A" Dimension	.82"	Cal. Chk.	N/A
Reject	OFF		Nominal Angle	45	Cal. Out	1125
Frequency	1.0 MHZ		Measured Angle	45	Ref. Blk. No.	NA
Mode	DUAL		Cable Type	RG 174	Reflector	NA
Damping	500 Ohms		Cable Length	15"	Amplitude/Sweep	NA

Axial Scan Calibration				Circ. Scan Calibration			
Cal. Refl.	Signal Amp.	Sweep Div.	Wmax	Cal. Refl.	Signal Amp.	Sweep Div.	Wmax
NA	NA	NA	NA	1/4	40	1.5	.75
NA	NA	NA	NA	1/2	80	3.0	1.8
NA	NA	NA	NA	3/4	65	4.5	2.9
NA	NA	NA	NA	ID	20	6.2	3.9
NA	NA	NA	NA				

Calibration Remarks:
NO ADDITIONAL DB NEEDED TO RAISE ID NOTCH TO DAC. 18° TILT WEDGE USED FOR EXIMINATION, CALIBRATED WITH NORMAL WEDGES.

Comp. Temp.: 75 °F Configuration: SAFE-END TO ELBOW Wo Location V-STAMP Lo Location TDC

Scan Dir.	Results NI	NRI	RI	Ind. No.	% DAC	Length L1	Lmax	L2	Reference Measurement W1	Wmax	W2	Sweep Position S1	Smax	S2	Thickness 1"<--	C/L	-->1"	Notes:
7		●		NA	NA													

Examination/Limitation Remarks:

EXAMINED FROM SAFE-END SIDE.

* Combined Code Coverage from all scans Dal 4-2000

Total Length of Weld	Crown Width	Total Length of Weld Examined	Extent of Perpendicular Scans (W)	Extent of Parallel Scans (L)
106.5	2.2	5 (L) NA 2 (L) NA 7 & 8 (W) NL	5 - from NA to NA 2 - from NA to NA	From (5) NL to (2) -1.85

Primary Examiner	Level	Assistant Examiner	Level	Non-Technical Review	Date
JOHN W. BELL John W Bell	II	GEORGE A. MORINI	II	Terry Stiger	4-19-00

SNC NDE Level II/III Review		Date	Percentage of Code Coverage	ANII Review	Date
Donald L. Lightsey	III	4-20-00	* 73.8 %	C Gerrard	4/22/00

Figure 1

Revision 7

SHARED

FARLEY NUCLEAR PLANT
Ultrasonic Calibration and Examination Record

FNP-0-NDE-100.41
Southern Nuclear Operating Company

Unit	Sketch/Component No.	Date	Sheet No.	
1	ALA1-4100-5R	4/17/00	S00F1U237	Page 1 of 1

Procedure/Rev./TCN	Couplant/Batch No.	Thermometer SN/Cal Due Date	Linearity Sheet No.
FNP-0-NDE-100.41 / 2 / 2A	Ultragel II / 00125	38193 / 8/27/2000	S00F1L001

Instrument			Search Unit		Calibration Block	
Instrument	STAVELEY		Transducer Mfg.	KBA	Cal. Blk. No.	ALA-52
Serial No.	136-896K		Serial No.	G14510 / G14511	Thickness	3.5"
	Ax. dB	Circ. dB	Size	2 (1.0")	Cal. Temp.	71
Ref.	NA	71.2	Frequency/Mode	1.0 / L	Cal. In	0705
Scan	NA	77.2	"A" Dimension	.82"	Cal. Chk.	N/A
Reject	OFF		Nominal Angle	45	Cal. Out	11:35
Frequency	1.0 MHZ		Measured Angle	45	Ref. Blk. No.	NA
Mode	DUAL		Cable Type	RG 174	Reflector	NA
Damping	500 Ohms		Cable Length	15"	Amplitude/Sweep	NA

Axial Scan Calibration				Circ. Scan Calibration			
Cal. Refl.	Signal Amp.	Sweep Div.	Wmax	Cal. Refl.	Signal Amp.	Sweep Div.	Wmax
NA	NA	NA	NA	1/4	40	1.5	.75
NA	NA	NA	NA	1/2	80	3.0	1.8
NA	NA	NA	NA	3/4	65	4.5	2.9
NA	NA	NA	NA	ID	25	6.2	3.9
NA	NA	NA	NA				

Calibration Remarks:
2.6 dB ADDED TO RAISE ID NOTCH TO DAC, (68.6 + 2.6 = 71.2). 18° TILT WEDGE USED FOR EXIMINATION, CALIBRATED WITH NORMAL WEDGES.

Comp. Temp.: 75 °F Configuration: SAFE-END TO ELBOW Wo Location V-STAMP Lo Location TDC

Scan Dir.	Results NI	NRI	RI	Ind. No.	% DAC	Length L1	Lmax	L2	Reference Measurement W1	Wmax	W2	Sweep Position S1	Smax	S2	Thickness 1"<--	C/L	-->1"	Notes:
8	●			N/A														

Examination/Limitation Remarks:

EXAMINED FROM SAFE-END SIDE.

* Combined code coverage from all scans [illegible] 4-20-00

Total Length of Weld	Crown Width	Total Length of Weld Examined	Extent of Perpendicular Scans (W)	Extent of Parallel Scans (L)
106.5	2.2	5 (L) NA 2 (L) NA 7 & 8 (W) NL	5 - from NA to NA 2 - from NA to NA	From (5) NL to (2) -1.85

Primary Examiner	Level	Assistant Examiner	Level	Non-Technical Review	Date
JOHN W. BELL John W Bell	II	GEORGE A. MORINI [illegible]	II	Terry Styer	4-19-00

SNC NDE Level II/III Review		Date	Percentage of Code Coverage *	ANII Review	Date
David L. Lathes	III	4-20-00	73.8 %	[illegible]	4/23/00

Figure 1

Revision 7

SHARED

FARLEY NUCLEAR PLANT
Ultrasonic Calibration and Examination Record

FNP-0-NDE-100.41
Southern Nuclear Operating Company

Unit	Sketch/Component No.	Date	Sheet No.
1	ALA1-4100-5R	4/17/00	S00F1U243

Page 1 of 2

Procedure/Rev./TCN	Couplant/Batch No.	Thermometer SN/Cal Due Date	Linearity Sheet No.
FNP-0-NDE-100.41 / 2 / 2A	Ultragel II / 00125	38193 / 8/27/2000	S00F1L001

Instrument			Search Unit		Calibration Block	
Instrument	STAVELEY		Transducer Mfg.	KBA	Cal. Blk. No.	ALA-52
Serial No.	136-896K		Serial No.	008NXT/008NXW	Thickness	3.5"
	Ax. dB	Circ. dB	Size	2 (1.0")	Cal. Temp.	71
Ref.	66	NA	Frequency/Mode	1.0 / L	Cal. In	0730
Scan	72	NA	"A" Dimension	.82"	Cal. Chk.	N/A
Reject	OFF		Nominal Angle	53	Cal. Out	1115
Frequency	1.0 MHZ		Measured Angle	53	Ref. Blk. No.	NA
Mode	DUAL		Cable Type	RG 174	Reflector	NA
Damping	500 Ohms		Cable Length	15"	Amplitude/Sweep	NA

Axial Scan Calibration				Circ. Scan Calibration			
Cal. Refl.	Signal Amp.	Sweep Div.	Wmax	Cal. Refl.	Signal Amp.	Sweep Div.	Wmax
1/4	80	1.5	1.2	NA	NA	NA	NA
1/2	70	3.0	1.95	NA	NA	NA	NA
3/4	40	4.5	2.95	NA	NA	NA	NA
ID	15	6.0	4.2	NA	NA	NA	NA
				NA	NA	NA	NA

Calibration Remarks:
NO ADDITIONAL dB NEEDED TO RAISE NOTCH TO DAC.

Comp. Temp.: 75 °F Configuration: SAFE-END TO ELBOW Wo Location V-STAMP Lo Location TDC

Scan Dir.	Results NI	NRI	RI	Ind. No.	% DAC	Length L1	Lmax	L2	Reference Measurement W1	Wmax	W2	Sweep Position S1	Smax	S2	Thickness 1"<--	C/L	--->1"	Notes:
5	●			N/A														

Examination/Limitation Remarks:

EXAMINED FROM SAFE-END SIDE.

*Combined Code Coverage from all scans [illegible] 4-20-00

Total Length of Weld	Crown Width	Total Length of Weld Examined	Extent of Perpendicular Scans (W)	Extent of Parallel Scans (L)
106.5	2.2	5 (L) NL 2 (L) NA 7 & 8 (W) NA	5 - from NL to .9 2 - from NA to NA	From (5) NA to (2) NA

Primary Examiner	Level	Assistant Examiner	Level	Non-Technical Review	Date
JOHN W. BELL [signature]	II	GEORGE A. MORINI [signature]	II	[signature]	4-19-00
SNC NDE Level II/III Review [signature]	III	Date 4-20-00	Percentage of * Code Coverage 73.8 %	ANII Review [signature]	Date 4/20/00

Figure 1

Revision 7

April 19, 2000
ASME Code Coverage for Steam Generator Hot Leg /Cold Leg

The following list is the numeric values assigned based on the OD profile and contour taken from A Loop. One dimension is provided which includes the new narrow groove weld and a portion of the old existing weld. The drawing to be used has a thickness of 3.3". The inner 1/3t dimension to be used will be 1.1". The width is based on the toe of the ID weld from the safe end side to the toe of the old existing OD weld, which measures 2.1".

AXIAL SCANS
Code requires .25" on each side of the above described weld toes.
Code coverage = 2.6" (width) x 1.1" (height) = 2.86 sq. "
Scan from elbow side: no limitations, 2.86sq "/ 2.86 sq. " = 100%
Scan from safe end side: limited due to taper / apex, two areas,
Box 1.35" x 1.1" = 1.485 sq. "
Triangle ½ x b x h = .5x.75"x1.1"= .413 sq. "
Total = 1.898 sq. " / 2.86 sq. " = 66.3%

CIRC. SCANS
Code requires .5" on each side of the above described weld toes.
Code coverage = 3.1" (width) x 1.1" (height) = 3.41 sq. "
Scan from safe end CW direction: .35" (width) x 1.1" (height) = .38 sq. "
Scan from elbow side CW direction: 1.65 " (width) x 1.1" (height) = 1.815 sq. "
Total = 2.2 sq. " / 3.41 sq. " = 64.5%

Scan from safe end CCW direction: .35" (width) x 1.1" (height) = .38 sq. "
Scan from elbow side CCW direction: 1.65 " (width) x 1.1" (height) = 1.815 sq. "
Total = 2.2 sq. " / 3.41 sq. " = 64.5%

Total ASME Code Coverage for the Weld is 73.8%. This is based on adding all four required scans, 100% + 66.3% + 64.5% + 64.5% = 295.3%
295.3/4 = 73.8%

NOTE: The coverage for the CW / CCW scans was not based on the centerline of the two transducers, but the centerline of one of the dual elements. ASME Section XI, Appendix III-2410(a) requires a 50% overlap between scans. Smaller transducers were tried to obtain maximum code coverage. Due to the metallurgical grain structure of the materials, a dual, 1.0 MHz, 1" diameter, transducer with curved shoes was used. On the safe end, wedges with an 18-degree tilt were used for the CW/CCW scans. The maximum area that could be scanned was examined. Supplement 4, (a) (1) of ASME Section XI requires a 35-degree or greater for the beam angle at the ID surface when using refracted Longitudinal waves. Only one direction coverage of the axial scan on the elbow side was obtained. RL waves are used with a 4/8-node calibration. Shear waves to provide a 6/8 vee-path is not practical for the cast stainless steel examination on the elbow. Thus we were limited to 66.3% from this direction.

SHARED

FARLEY NUCLEAR PLANT
Ultrasonic Calibration and Examination Record

FNP-0-NDE-100.41
Southern Nuclear Operating Company

Unit	Sketch/Component No.	Date	Sheet No.	
1	ALA1-4100-5R	4/17/00	S00F1U241	Page 1 of 1

Procedure/Rev./TCN	Couplant/Batch No.	Thermometer SN/Cal Due Date	Linearity Sheet No.
FNP-0-NDE-100.41 / 2 / 2A	Ultragel II / 00125	38193 / 8/27/2000	S00F1L001

Instrument			Search Unit		Calibration Block	
Instrument	STAVELEY		Transducer Mfg.	KBA	Cal. Blk. No.	ALA/APR-33
Serial No.	136-896K		Serial No.	008NXR/008NXV	Thickness	2.45"
	Ax. dB	Circ. dB	Size	2 (1.0")	Cal. Temp.	80
Ref.	NA	71.2	Frequency/Mode	N/A / L	Cal. In	0820
Scan	NA	77.2	"A" Dimension	.82"	Cal. Chk.	N/A
Reject	OFF		Nominal Angle	45	Cal. Out	1055
Frequency	1.0 MHZ		Measured Angle	46	Ref. Blk. No.	NA
Mode	DUAL		Cable Type	RG 174	Reflector	NA
Damping	500 Ohms		Cable Length	15"	Amplitude/Sweep	NA

Axial Scan Calibration				Circ. Scan Calibration			
Cal. Refl.	Signal Amp.	Sweep Div.	Wmax	Cal. Refl.	Signal Amp.	Sweep Div.	Wmax
NA	NA	NA	NA	1/4	30	1.5	.65
NA	NA	NA	NA	1/2	80	3.0	1.3
NA	NA	NA	NA	3/4	50	4.5	1.9
NA	NA	NA	NA	ID	35	5.8	2.65
NA	NA	NA	NA				

Calibration Remarks:
NO ADDITIONAL dB NEEDED TO RAISE NOTCH TO DAC.

Comp. Temp.: 75 °F Configuration: SAFE-END TO ELBOW Wo Location V-STAMP Lo Location TDC

Scan Dir.	Results NI	NRI	RI	Ind. No.	% DAC	Length L1	Lmax	L2	Reference Measurement W1	Wmax	W2	Sweep Position S1	Smax	S2	Thickness 1"<--	C/L	-->1"	Notes:
7		●		NA														
8		●		NA														

Examination/Limitation Remarks:

EXAMINED FROM ELBOW SIDE.

*Combined Code Coverage from all scans [illegible] 4-20-00

Total Length of Weld	Crown Width	Total Length of Weld Examined	Extent of Perpendicular Scans (W)	Extent of Parallel Scans (L)
106.5	2.2	5 (L) NA 2 (L) NA 7 & 8 (W) NA	5 - from NA to NA 2 - from NA to NA	From (5) -1.3 to (2) NL

Primary Examiner	Level	Assistant Examiner	Level	Non-Technical Review	Date
JOHN W. BELL [signature]	II	GEORGE A. MORINI [signature]	II	Terry Styer	4-19-00

SNC NDE Level II/III Review		Date	Percentage of Code Coverage	ANII Review	Date
[signature]	III	4-20-00	73.8 %	[signature]	4/22/00

Figure 1

Revision 7

Ultrasonic Thickness and Contour Examination Record — **Southern Nuclear Operating Company**

Unit	Weld Number	Sheet No.	Date
1	ALA1-4100-5R	S00F1U248	4/17/2000

.O/Drawing Number	Couplant/Batch Number	Instrument Manufacturer
ALA1-4100	~~N/A~~ Ultragel II 4-20-00 / 00125	STAVELEY

Material Type	Calibration Standard/ Serial No.	Model Number	Serial Number
☐ C/S ☒ S/S Other	SS IIW / 86-4245	SONIC 136	136-896K

Examiner	SNT Level	Transducer Manufacturer	Type	Size
JOHN W. BELL John W Bell	II	KBA	0°	.75

Examiner	SNT Level	Serial Number	Frequency
GEORGE A. MORINI	II	B25613	1.0 MHz

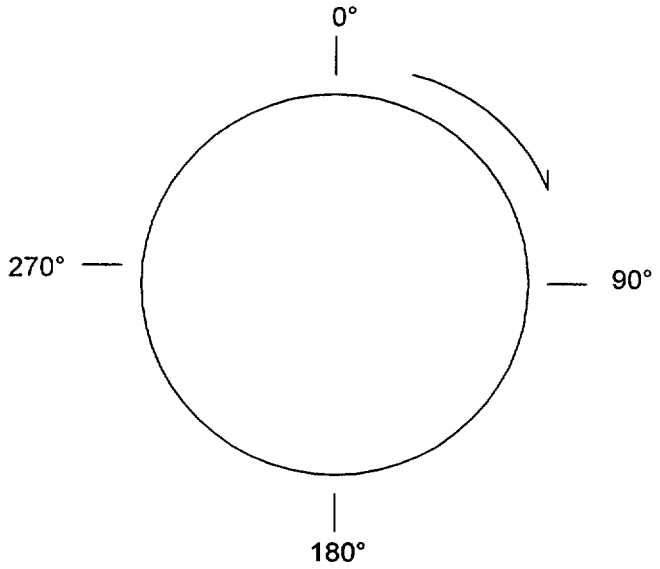

Location	0°	90 °	180°	270°
A	4.0	4.1	4.1	4.0
B	3.25	3.25	3.35	3.4
C	3.1	3.1	3.1	3.05
D	3.25	3.2	3.1	3.2
E	3.3	3.4	3.2	3.3

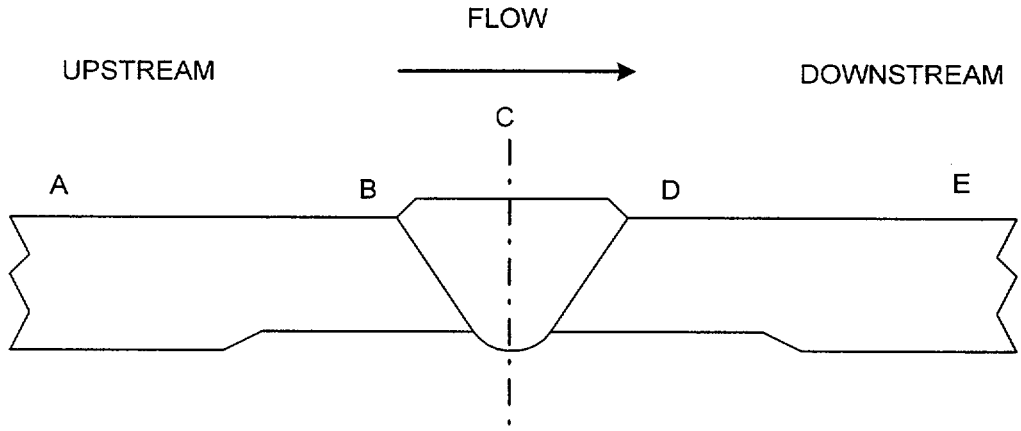

COUNTERBORE

UPSTREAM	DOWNSTREAM
NA	NA

REMARKS:

DE Level II/III Review	Level	Date	Non-Technical Review	Date
Darryl Griffin	III	4-20-00	Terry Stye	4-19-00

A- COLD LEG
SHEET NO. S00F1U248

SAFE-END

ELBOW

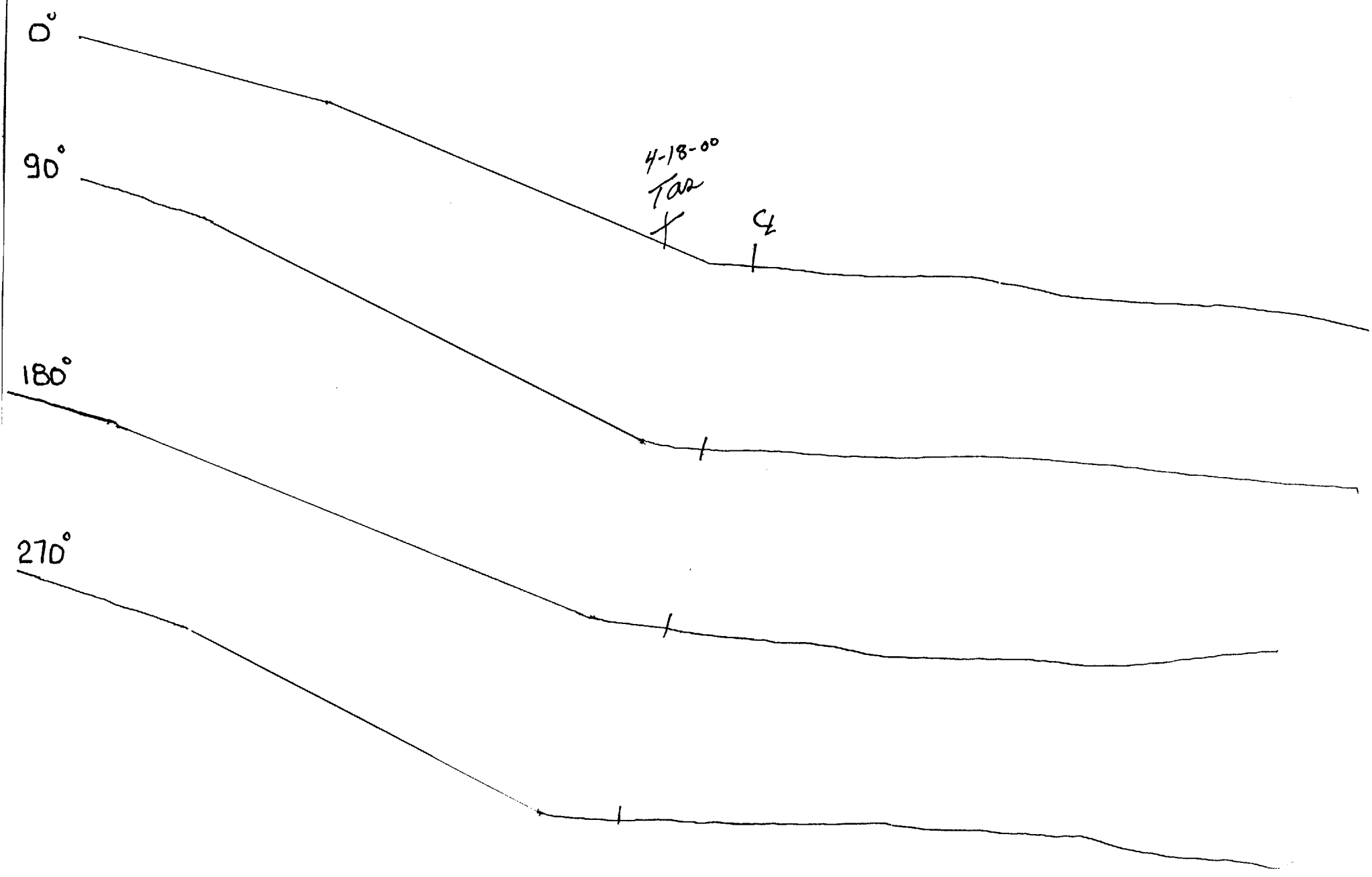

WPIR #	NONDESTRUCTIVE EXAMINATION REPORT LIQUID PENETRANT EXAMINATION		REPORT #
P-RCB-059			PT-00-158
JOB #	JOB NAME	SURFACE CONDITION	DATE
23734	FARLEY UNIT 1 SGR	☒ GROUND ☐ AS WELDED	4/19/00
ISO / DWG #	ITEM / COMP ID	TIME OF EXAM ☒ N/A ☐ PRE-PWHT ☐ POST-PWHT	COMPONENT TEMP
FSK-M-145	FW1-SG		74°F
CODE / WELD CLASS	COMPONENT CONFIGURATION	MATL TYPE	PROCEDURE & REVISION
ASME XI CL I	HOT LEG / EL TO SAFE-END	☐ C/S ☒ S/S ☐ DISSIM METAL	PT (SR)-ASME III / XI REV. 2

	CLEANER/REMOVER	PENETRANT	DEVELOPER
MFR	MAGNAFLUX	MAGNAFLUX	MAGNAFLUX
TYPE	SKC-S	SKL-SP	SKD-S2
BATCH #	99M01K	98J11K	99G09K

INDICATION CODE: NI=NO INDICATIONS NRI=NO RECORDABLE INDICATIONS C=CRACK
ROUND=ROUNDED INDICATION LINEAR=LINEAR INDICATION

PART OR WELD #	ACC (√)	REJ (√)	IND CODE	REMARKS
FW1SG	✓		NRI	NONE
OD only				
AIAI-4200-4R				

SKETCH / COMMENTS

AREA OF EXAMINATION PERFORMED IN ACCORDANCE WITH ATTACHED SNC DRAWING. AREA EXAMINED INCLUDED FW1-SG AND 3.0" INTO ELBOW FROM NOZZLE SIDE OF EXAMINATION AREA.

STEAM GENERATOR 1B

M&TE NO. 198060

CAL. DUE DATE: 7/26/00

EXAMINER	LEVEL	DATE
Wade A. Selby	II	4/19/00
REVIEW		**DATE**
[illegible]	III	4-19-00

Gary A. Koffler SNC Level III 4-20-00
ANII Review: [illegible] 4/22/00

Steam Generator

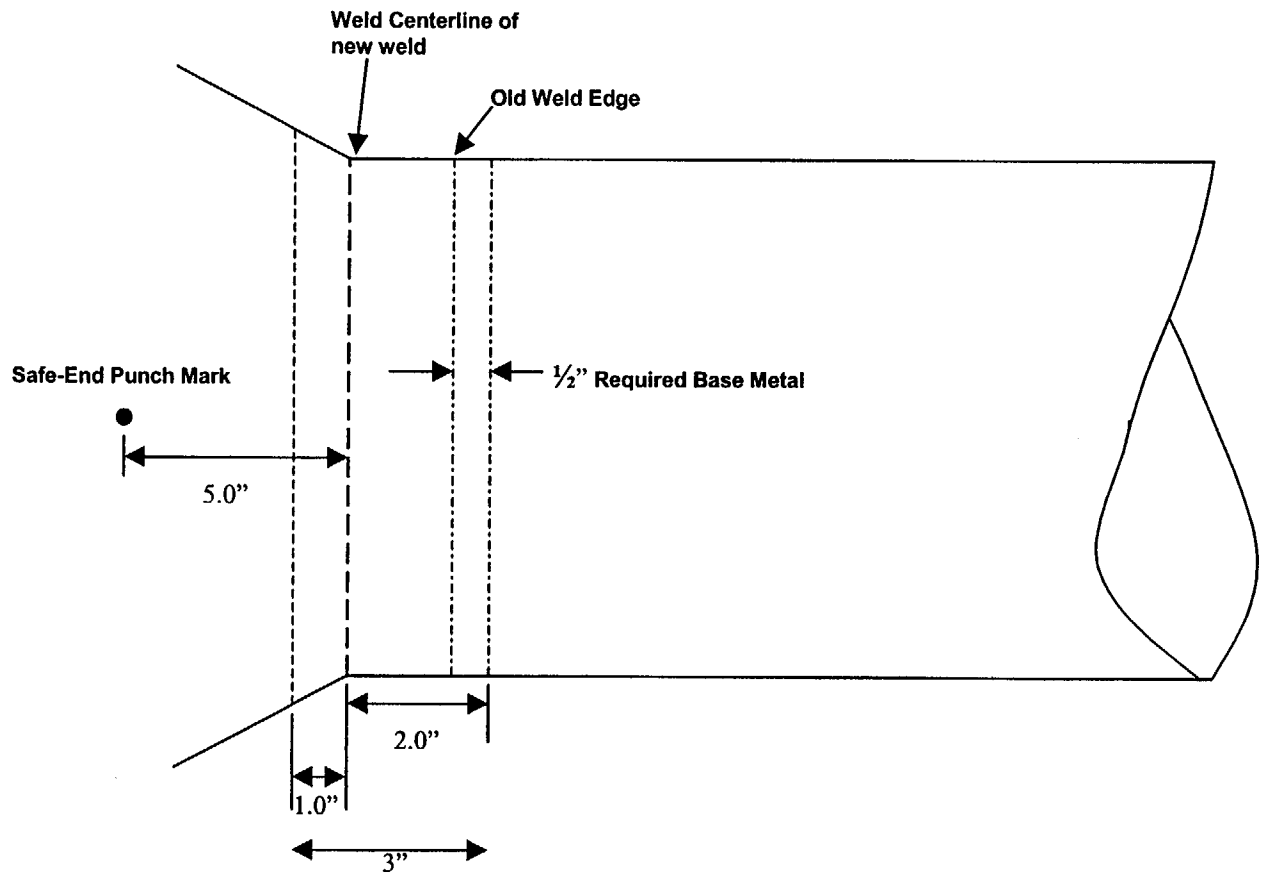

PT Examination of 3" Width will cover all LEGS.

SHARED

FARLEY NUCLEAR PLANT
Ultrasonic Calibration and Examination Record

FNP-0-NDE-100.41
Southern Nuclear Operating Company

Unit	Sketch/Component No.	Date	Sheet No.	
1	ALA1-4200-4R	4/20/00	S00F1U263	Page 1 of 2

Procedure/Rev./TCN	Couplant/Batch No.	Thermometer SN/Cal Due Date	Linearity Sheet No.
FNP-0-NDE-100.41 / 2 / 2A	Ultragel II / 00125	38193 / 8/27/2000	S00F1L001

Instrument			Search Unit		Calibration Block	
Instrument	STAVELEY		Transducer Mfg.	KBA	Cal. Blk. No.	ALA-52
Serial No.	136-896K		Serial No.	008NXT/008NXW	Thickness	3.5"
	Ax. dB	Circ. dB	Size	2 (1.0")	Cal. Temp.	70
Ref.	66	NA	Frequency/Mode	1.0 / L	Cal. In	0930
Scan	72	NA	"A" Dimension	.82"	Cal. Chk.	N/A
Reject	OFF		Nominal Angle	53	Cal. Out	1445
Frequency	1.0 MHZ		Measured Angle	53	Ref. Blk. No.	NA
Mode	DUAL		Cable Type	RG 174	Reflector	NA
Damping	500 Ohms		Cable Length	15"	Amplitude/Sweep	NA

Axial Scan Calibration				Circ. Scan Calibration			
Cal. Refl.	Signal Amp.	Sweep Div.	Wmax	Cal. Refl.	Signal Amp.	Sweep Div.	Wmax
1/4	80	1.5	1.2	NA	NA	NA	NA
1/2	70	3.0	1.95	NA	NA	NA	NA
3/4	40	4.5	2.95	NA	NA	NA	NA
ID	15	6.0	4.2	NA	NA	NA	NA
				NA	NA	NA	NA

Calibration Remarks:
NO ADDITIONAL dB NEEDED TO RAISE NOTCH TO DAC.

Comp. Temp.: 80 °F Configuration: ELBOW TO SAFE-END Wo Location V-STAMP Lo Location TDC

Scan Dir.	Results NI	NRI	RI	Ind. No.	% DAC	Length L1	Lmax	L2	Reference Measurement W1	Wmax	W2	Sweep Position S1	Smax	S2	Thickness 1"<--	C/L	-->1"	Notes:
2		●		NA														

Examination/Limitation Remarks: EXAMINED FROM SAFE-END SIDE

* Combined Code Coverage from all scans GAM 4-20-00

Total Length of Weld	Crown Width	Total Length of Weld Examined	Extent of Perpendicular Scans (W)	Extent of Parallel Scans (L)
106.5	2.2	5 (L) NL 2 (L) NA 7 & 8 (W) NA	5 - from NL to .9" 2 - from NA to NA	From (5) NA to (2) NA

Primary Examiner	Level	Assistant Examiner	Level	Non-Technical Review	Date
JOHN W. BELL John W Bell	II	GEORGE A. MORINI	II	Terry Styron	4-20-00
SNC NDE Level II/III Review		Date	Percentage of Code Coverage	ANII Review	Date
Barry L. Raffa	III	4-20-00	* 73.8 %		4/22/00

Figure 1

Revision 7

April 19, 2000
ASME Code Coverage for Steam Generator Hot Leg /Cold Leg

The following list is the numeric values assigned based on the OD profile and contour taken from A Loop. One dimension is provided which includes the new narrow groove weld and a portion of the old existing weld. The drawing to be used has a thickness of 3.3". The inner 1/3t dimension to be used will be 1.1". The width is based on the toe of the ID weld from the safe end side to the toe of the old existing OD weld, which measures 2.1".

AXIAL SCANS
Code requires .25" on each side of the above described weld toes.
Code coverage = 2.6" (width) x 1.1" (height) = 2.86 sq. "
Scan from elbow side: no limitations, 2.86sq "/ 2.86 sq. " = 100%
Scan from safe end side: limited due to taper / apex, two areas,
Box 1.35" x 1.1" = 1.485 sq. "
Triangle ½ x b x h = .5x.75"x1.1"= .413 sq. "
Total = 1.898 sq. " / 2.86 sq. " = 66.3%

CIRC. SCANS
Code requires .5" on each side of the above described weld toes.
Code coverage = 3.1" (width) x 1.1" (height) = 3.41 sq. "
Scan from safe end CW direction: .35" (width) x 1.1" (height) = .38 sq. "
Scan from elbow side CW direction: 1.65 " (width) x 1.1" (height) = 1.815 sq. "
Total = 2.2 sq. " / 3.41 sq. " = 64.5%

Scan from safe end CCW direction: .35" (width) x 1.1" (height) = .38 sq. "
Scan from elbow side CCW direction: 1.65 " (width) x 1.1" (height) = 1.815 sq. "
Total = 2.2 sq. " / 3.41 sq. " = 64.5%

Total ASME Code Coverage for the Weld is 73.8%. This is based on adding all four required scans, 100% + 66.3% + 64.5% + 64.5% = 295.3%
295.3/4 = 73.8%

NOTE: The coverage for the CW / CCW scans was not based on the centerline of the two transducers, but the centerline of one of the dual elements. ASME Section XI, Appendix III-2410(a) requires a 50% overlap between scans. Smaller transducers were tried to obtain maximum code coverage. Due to the metallurgical grain structure of the materials, a dual, 1.0 MHz, 1" diameter, transducer with curved shoes was used. On the safe end, wedges with an 18-degree tilt were used for the CW/CCW scans. The maximum area that could be scanned was examined. Supplement 4, (a) (1) of ASME Section XI requires a 35-degree or greater for the beam angle at the ID surface when using refracted Longitudinal waves. Only one direction coverage of the axial scan on the elbow side was obtained. RL waves are used with a 4/8-node calibration. Shear waves to provide a 6/8 vee-path is not practical for the cast stainless steel examination on the elbow. Thus we were limited to 66.3% from this direction.

SHARED

FARLEY NUCLEAR PLANT
Ultrasonic Calibration and Examination Record

FNP-0-NDE-100.41
Southern Nuclear Operating Company

Unit	Sketch/Component No.	Date	Sheet No.	Page
1	ALA1-4200-4R	4/20/00	S00F1U264	1 of 1

Procedure/Rev./TCN	Couplant/Batch No.	Thermometer SN/Cal Due Date	Linearity Sheet No.
FNP-0-NDE-100.41 / 2 / 2A	Ultragel II / 00125	38193 / 8/27/2000	S00F1L001

Instrument		Search Unit		Calibration Block	
Instrument	STAVELEY	Transducer Mfg.	KBA	Cal. Blk. No.	ALA/APR-33
Serial No.	136-896K	Serial No.	008NXR/008NXV	Thickness	2.45"
	Ax. dB / Circ. dB	Size	2 (1.0")	Cal. Temp.	80
Ref.	NA / 71.2	Frequency/Mode	1.0 / L	Cal. In	1135
Scan	NA / 77.2	"A" Dimension	.82"	Cal. Chk.	N/A
Reject	OFF	Nominal Angle	45	Cal. Out	1354
Frequency	1.0 MHZ	Measured Angle	45	Ref. Blk. No.	NA
Mode	DUAL	Cable Type	RG 174	Reflector	NA
Damping	500 Ohms	Cable Length	15"	Amplitude/Sweep	NA

Axial Scan Calibration				Circ. Scan Calibration			
Cal. Refl.	Signal Amp.	Sweep Div.	Wmax	Cal. Refl.	Signal Amp.	Sweep Div.	Wmax
NA	NA	NA	NA	1/4	30	1.5	.65
NA	NA	NA	NA	1/2	80	3.0	1.3
NA	NA	NA	NA	3/4	50	4.5	1.9
NA	NA	NA	NA	ID	35	5.8	2.65
NA	NA	NA	NA				

Calibration Remarks:
NO ADDITIONAL dB NEEDED TO RAISE NOTCH TO DAC.

Comp. Temp.: 80 °F Configuration: ELBOW TO SAFE-END Wo Location V-STAMP Lo Location TDC

Scan Dir.	Results NI	NRI	RI	Ind. No.	% DAC	Length L1	Lmax	L2	Reference Measurement W1	Wmax	W2	Sweep Position S1	Smax	S2	Thickness 1"<--	C/L	-->1"	Notes:
7/8		●		NA														

Examination/Limitation Remarks: EXAMINED FROM ELBOW SIDE.

*Combined Code Coverage from all scans GAM 4-20-00

Total Length of Weld	Crown Width	Total Length of Weld Examined	Extent of Perpendicular Scans (W)	Extent of Parallel Scans (L)
106.5	2.2	5 (L) NA 2 (L) NA 7 & 8 (W) NL	5 - from NA to NA 2 - from NA to NA	From (5) .2" to (2) NL

Primary Examiner	Level	Assistant Examiner	Level	Non-Technical Review	Date
JOHN W. BELL John W Bell	II	GEORGE A. MORINI	II	Terry Styer	4-20-00
SNC NDE Level II/III Review		Date	Percentage of Code Coverage	ANII Review	Date
	III	4-20-00	*73.8 %	CG Wood	4/22/00

Figure 1

Revision 7

SHaRED

FARLEY NUCLEAR PLANT
Ultrasonic Calibration and Examination Record

FNP-0-NDE-100.41
Southern Nuclear Operating Company

Unit	Sketch/Component No.	Date	Sheet No.
1	ALA1-4200-4R	4/20/00	S00F1U262

Page 1 of 3

Procedure/Rev./TCN	Couplant/Batch No.	Thermometer SN/Cal Due Date	Linearity Sheet No.
FNP-0-NDE-100.41 / 2 / 2A	Ultragel II / 00125	38193 / 8/27/2000	S00F1L001

Instrument			Search Unit		Calibration Block	
Instrument	STAVELEY		Transducer Mfg.	KBA	Cal. Blk. No.	ALA/APR-33
Serial No.	136-896K		Serial No.	D20267/D20268	Thickness	2.45"
	Ax. dB	Circ. dB	Size	2 (1.0")	Cal. Temp.	80
Ref.	58	NA	Frequency/Mode	1.0 / L	Cal. In	1130
Scan	64	NA	"A" Dimension	.82"	Cal. Chk.	N/A
Reject	OFF		Nominal Angle	45	Cal. Out	1350
Frequency	1.0 MHZ		Measured Angle	45	Ref. Blk. No.	NA
Mode	DUAL		Cable Type	RG 174	Reflector	NA
Damping	500 Ohms		Cable Length	15"	Amplitude/Sweep	NA

Axial Scan Calibration				Circ. Scan Calibration			
Cal. Refl.	Signal Amp.	Sweep Div.	Wmax	Cal. Refl.	Signal Amp.	Sweep Div.	Wmax
1/4	30	1.5	.62	NA	NA	NA	NA
1/2	80	3.0	1.2	NA	NA	NA	NA
3/4	45	4.5	1.85	NA	NA	NA	NA
ID	25	6.1	2.5	NA	NA	NA	NA
				NA	NA	NA	NA

Calibration Remarks:
NO ADDITIONAL DB NEEDED TO RAISE ID NOTCH TO DAC.

Comp. Temp.: 80 °F Configuration: ELBOW TO SAFE-END Wo Location V-STAMP Lo Location TDC ~~100.5~~ DAL 4-20-00

Scan Dir.	Results NI	NRI	RI	Ind. No.	% DAC	Length L1	Lmax	L2	Reference Measurement W1	Wmax	W2	Sweep Position S1	Smax	S2	Thickness 1"<--	C/L	-->1"	Notes:
5		●		NA														

Examination/Limitation Remarks: EXAMINED FROM ELBOW SIDE.

* Combined Code Coverage from all scans DAL 4-20-00

Total Length of Weld	Crown Width	Total Length of Weld Examined	Extent of Perpendicular Scans (W)	Extent of Parallel Scans (L)
106.5	2.2	5 (L) NA 2 (L) NL 7 & 8 (W) NA	5 - from NA to NA 2 - from NA to .9	From (5) NA to (2) NA

Primary Examiner	Level	Assistant Examiner	Level	Non-Technical Review	Date
JOHN W. BELL John W Bell	II	GEORGE A. MORINI	II	Terry Styron	4-20-00

SNC NDE Level II/III Review		Date	Percentage of Code Coverage	ANII Review	Date
Barry L. Lotty	III	4-20-00	* 73.8 %	C G Gunnel	4/22/00

Figure 1

Revision 7

WELD NO. ALA1-42004R SHEET No. S00F1U262

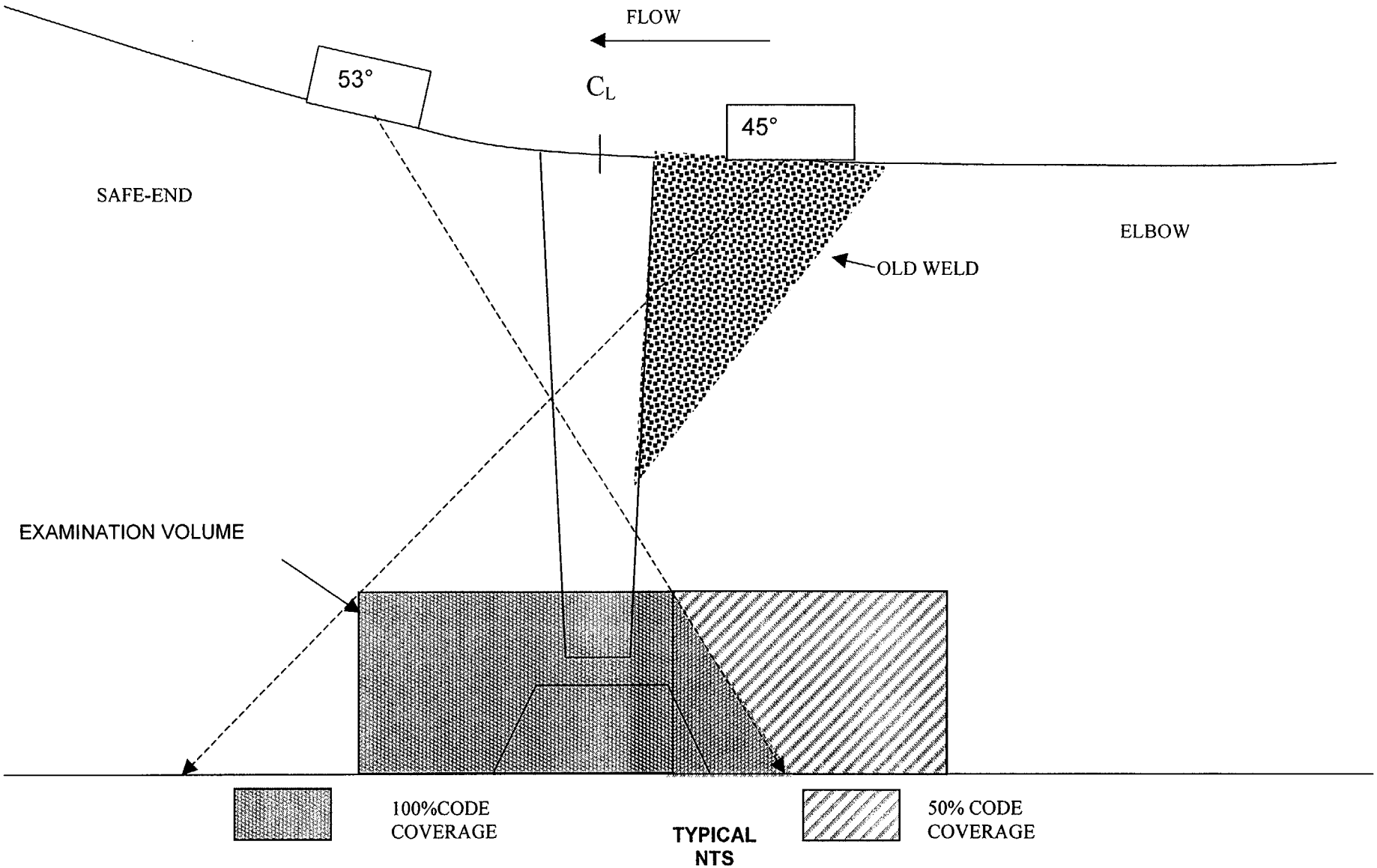

AX CODE COVERAGE PLOT
AX. CODE COVERAGE OBAINED =83.2%
CIRC CODE COVERAGE OBAINED =64.5%
TOTAL CODE COVERAGE OBAINED =73.8%
SEE PAGE 3 OF 3 FOR CIRC CODE COVERAGE PLOT

WELD NO. ALA1-42004R SHEET No. S00F1U262

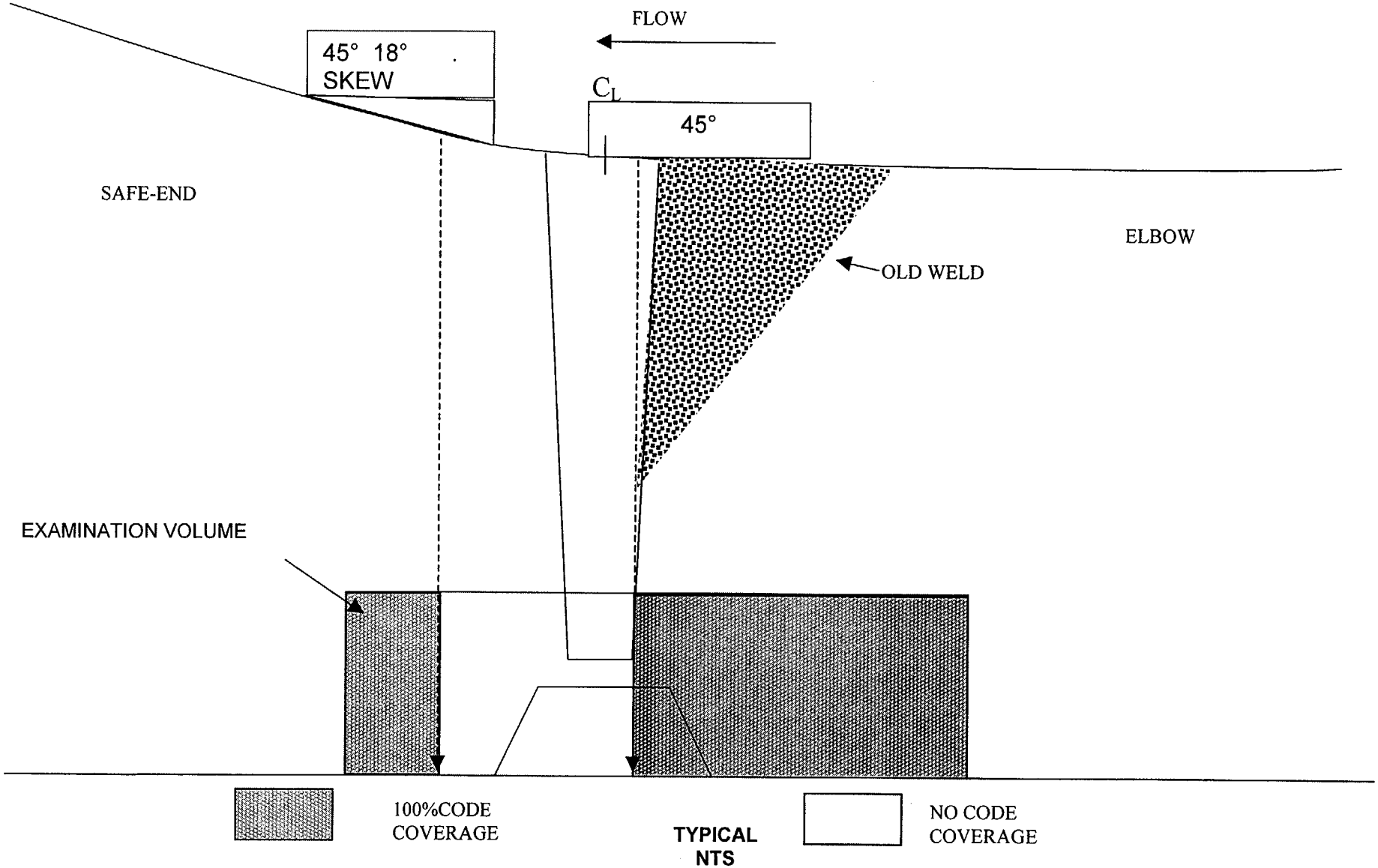

CIRC CODE COVERAGE PLOT
CIRC CODE COVERAGE OBAINED =64.5%
AX. CODE COVERAGE OBAINED =83.2%
TOTAL CODE COVERAGE OBAINED =73.8%
SEE PAGE 3 OF 3 FOR CIRC CODE COVERAGE PLOT

SHARED

FARLEY NUCLEAR PLANT
Ultrasonic Calibration and Examination Record

FNP-0-NDE-100.41
Southern Nuclear Operating Company

Unit	Sketch/Component No.	Date	Sheet No.
1	ALA1-4200-4R	4/20/00	S00F1U265

Page 1 of 1

Procedure/Rev./TCN	Couplant/Batch No.	Thermometer SN/Cal Due Date	Linearity Sheet No.
FNP-0-NDE-100.41 / 2 / 2A	Ultragel II / 00125	38193 / 8/27/2000	S00F1L001

Instrument		Search Unit		Calibration Block	
Instrument	STAVELEY	Transducer Mfg.	KBA	Cal. Blk. No.	ALA-52
Serial No.	136-896K	Serial No.	H12393/H12394	Thickness	3.5"
	Ax. dB / Circ. dB	Size	2 (1.0")	Cal. Temp.	70
Ref.	NA / 70.4	Frequency/Mode	1.0 / L	Cal. In	0940
Scan	NA / 76.4	"A" Dimension	.82"	Cal. Chk.	N/A
Reject	OFF	Nominal Angle	45	Cal. Out	1430
Frequency	1.0 MHZ	Measured Angle	45	Ref. Blk. No.	NA
Mode	DUAL	Cable Type	RG 174	Reflector	NA
Damping	500 Ohms	Cable Length	15"	Amplitude/Sweep	NA

Axial Scan Calibration				Circ. Scan Calibration			
Cal. Refl.	Signal Amp.	Sweep Div.	Wmax	Cal. Refl.	Signal Amp.	Sweep Div.	Wmax
NA	NA	NA	NA	1/4	40	1.5	.75
NA	NA	NA	NA	1/2	80	3.0	1.8
NA	NA	NA	NA	3/4	65	4.5	2.9
NA	NA	NA	NA	ID	20	6.2	3.9
NA	NA	NA	NA				

Calibration Remarks:
NO ADDITIONAL DB NEEDED TO RAISE ID NOTCH TO DAC. 18° TILT WEDGE USED FOR EXIMINATION, CALIBRATED WITH NORMAL WEDGES.

Comp. Temp.: 80 °F Configuration: ELBOW TO SAFE-END

Wo Location V-STAMP Lo Location TDC

Scan Dir.	Results NI	NRI	RI	Ind. No.	% DAC	Length L1	Lmax	L2	Reference Measurement W1	Wmax	W2	Sweep Position S1	Smax	S2	Thickness 1"<--	C/L	-->1"	Notes:
7		●		NA														

Examination/Limitation Remarks: EXAMINED FROM SAFE-END SIDE.

* Combined Code Coverage from all scans Bal 4-20-00

Total Length of Weld	Crown Width	Total Length of Weld Examined	Extent of Perpendicular Scans (W)	Extent of Parallel Scans (L)
106.5	2.2	5 (L) NA 2 (L) NA 7 & 8 (W) NL	5 - from NA to NA 2 - from NA to NA	From (5) NL to (2) .5"

Primary Examiner	Level	Assistant Examiner	Level	Non-Technical Review	Date
JOHN W. BELL John W Bell	II	GEORGE A. MORINI	II	Terry Styen	4-20-00
SNC NDE Level III Review	Date	Percentage of Code Coverage		ANII Review	Date
Darrell Stiles III	4-20-00	* 73.8 %		CGWood	4/22/00

Figure 1

Revision 7

SHARED

FARLEY NUCLEAR PLANT
Ultrasonic Calibration and Examination Record

FNP-0-NDE-100.41
Southern Nuclear Operating Company

Unit	Sketch/Component No.	Date	Sheet No.	
1	ALA1-4200-4R	4/20/00	S00F1U266	Page 1 of 1

Procedure/Rev./TCN	Couplant/Batch No.	Thermometer SN/Cal Due Date	Linearity Sheet No.
FNP-0-NDE-100.41 / 2 / 2A	Ultragel II / 00125	38193 / 8/27/2000	S00F1L001

Instrument		Search Unit		Calibration Block	
Instrument	STAVELEY	Transducer Mfg.	KBA	Cal. Blk. No.	ALA-52
Serial No.	136-896K	Serial No.	G14510 / G14511	Thickness	3.5"
	Ax. dB / Circ. dB	Size	2 (1.0")	Cal. Temp.	70
Ref.	NA / 71.2	Frequency/Mode	1.0 / L	Cal. In	0950
Scan	NA / 77.2	"A" Dimension	.82"	Cal. Chk.	N/A
Reject	OFF	Nominal Angle	45	Cal. Out	1440
Frequency	1.0 MHZ	Measured Angle	45	Ref. Blk. No.	NA
Mode	DUAL	Cable Type	RG 174	Reflector	NA
Damping	500 Ohms	Cable Length	15"	Amplitude/Sweep	NA

Axial Scan Calibration				Circ. Scan Calibration			
Cal. Refl.	Signal Amp.	Sweep Div.	Wmax	Cal. Refl.	Signal Amp.	Sweep Div.	Wmax
NA	NA	NA	NA	1/4	40	1.5	.75
NA	NA	NA	NA	1/2	80	3.0	1.8
NA	NA	NA	NA	3/4	65	4.5	2.9
NA	NA	NA	NA	ID	25	6.2	3.9
NA	NA	NA	NA				

Calibration Remarks:
2.6 dB ADDED TO RAISE ID NOTCH TO DAC, (68.6 + 2.6 = 71.2). 18° TILT WEDGE USED FOR EXIMINATION, CALIBRATED WITH NORMAL WEDGES.

Comp. Temp.: 80 °F Configuration: ELBOW TO SAFE-END Wo Location V-STAMP Lo Location TDC

Scan Dir.	Results NI	NRI	RI	Ind. No.	% DAC	Length L1	Lmax	L2	Reference Measurement W1	Wmax	W2	Sweep Position S1	Smax	S2	Thickness 1"<--	C/L	-->1"	Notes:
8		●		NA														

Examination/Limitation Remarks:

EXAMINED FROM SAFE-END SIDE.

* Combined Code Coverage from all scans Def 4/20/00

Total Length of Weld	Crown Width	Total Length of Weld Examined	Extent of Perpendicular Scans (W)	Extent of Parallel Scans (L)
106.5	2.2	5 (L) NA 2 (L) NA 7 & 8 (W) NL	5 - from NA to NA 2 - from NA to NA	From (5) NL to (2) .5"

Primary Examiner	Level	Assistant Examiner	Level	Non-Technical Review	Date
JOHN W. BELL John W Bell	II	GEORGE A. MORINI	II	Terry Styron	4-20-00

SNC NDE Level II/III Review		Date		ANII Review	Date
Danny L. Griffin	III	4-20-00	Percentage of Code Coverage * 73.8 %	CGuard	4/22/00

Figure 1

Ultrasonic Thickness and Contour Examination Record

FNP-0-NDE-100.35
Southern Nuclear Operating Company

Unit	Weld Number	Sheet No.	Date
1	ALA1-4200-4R	S00F1U272	4/20/2000

/Drawing Number	Couplant/Batch Number	Instrument Manufacturer
ALA1-4200	ULTRAGEL II / 00125	STAVELEY

Material Type	Calibration Standard/ Serial No.	Model Number	Serial Number
☐ C/S ☒ S/S Other	SS IIW / 86-4245	SONIC 136	136-896K

Examiner	SNT Level	Transducer Manufacturer	Type	Size
JOHN W. BELL John W Bell	II	KBA	~~NA~~ 0°	.75

Examiner	SNT Level	Serial Number	Frequency
GEORGE A. MORINI	II	B25613	1.0 MHz

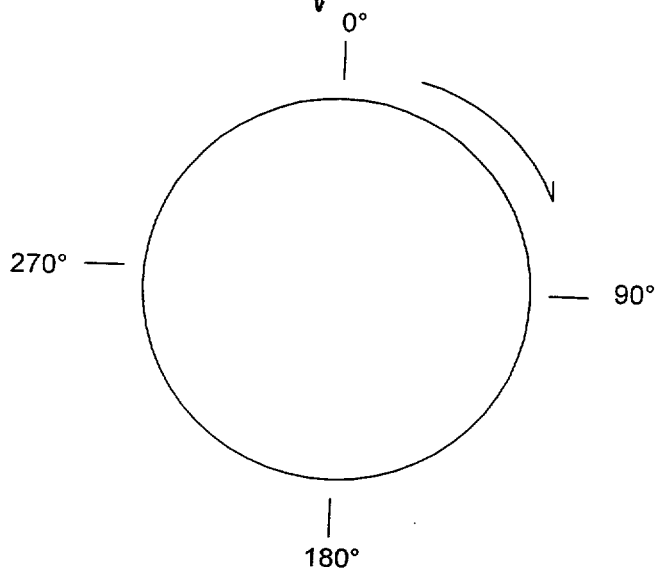

Location	0°	90 °	180°	270°
A	3.4	3.4	3.3	3.4
B	3.2	3.2	3.0	3.2
C	3.0	3.0	3.0	3.0
D	3.4	3.4	3.4	3.4
E	4.2	4.2	4.2	4.2

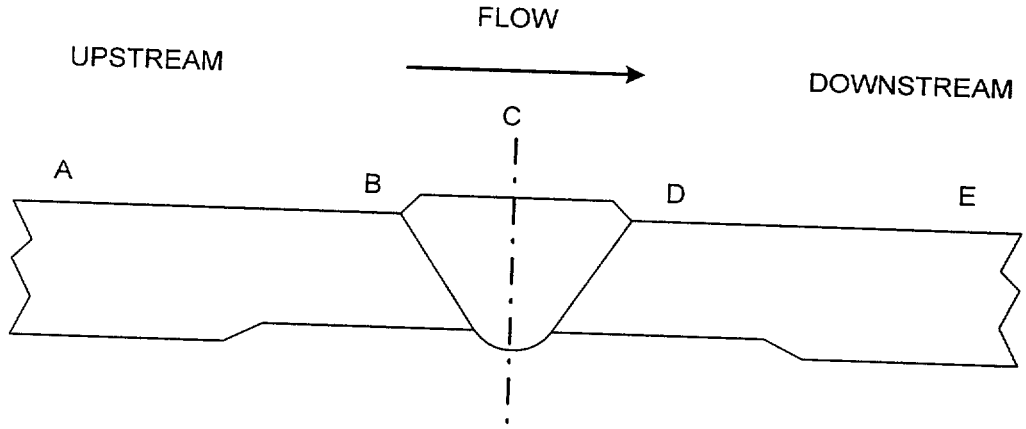

COUNTERBORE

NA	NA
UPSTREAM	DOWNSTREAM

REMARKS:

E Level II/III Review	Level	Date	Non-Technical Review	Date
[illegible signature]	III	4-20-00	Terry Styron	4-20-00

Revision 1

B HOT LEG ALAI-4200-4R
SHEET No SOOFIU272
Page 2 of 2

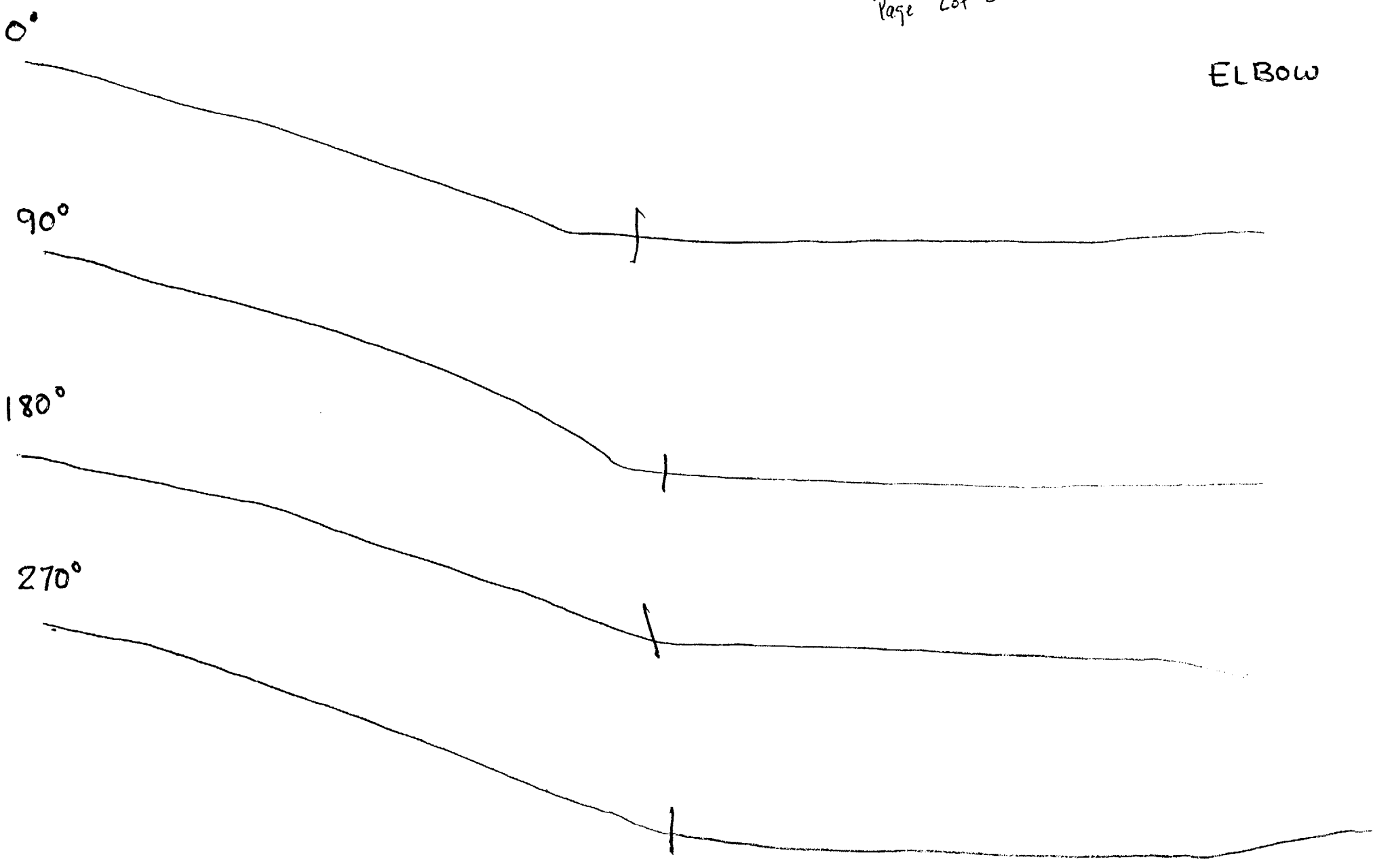

BECHTEL

WPIR #	NONDESTRUCTIVE EXAMINATION REPORT LIQUID PENETRANT EXAMINATION		REPORT #
P-RCB-059			PT-00-157
JOB # 23734	JOB NAME FARLEY UNIT 1 SGR	SURFACE CONDITION ☒ GROUND ☐ AS WELDED	DATE 4/19/00
ISO / DWG # FSK-M-145	ITEM / COMP ID FW2-SG	TIME OF EXAM ☒ N/A ☐ PRE-PWHT ☐ POST-PWHT	COMPONENT TEMP 74°F
CODE / WELD CLASS ASME XI CL I	COMPONENT CONFIGURATION COLD LEG / SAFE-END TO EL	MATL TYPE ☐ C/S ☒ S/S ☐ DISSIM METAL	PROCEDURE & REVISION PT (SR)-ASME III / XI REV. 2

	CLEANER/REMOVER	PENETRANT	DEVELOPER
MFR	MAGNAFLUX	MAGNAFLUX	MAGNAFLUX
TYPE	SKC-S	SKL-SP	SKD-S2
BATCH #	99M01K	98J11K	99G09K

INDICATION CODE: NI=NO INDICATIONS NRI=NO RECORDABLE INDICATIONS C=CRACK ROUND=ROUNDED INDICATION LINEAR=LINEAR INDICATION

PART OR WELD #	ACC (√)	REJ (√)	IND CODE	REMARKS
FW2SG	✓		NRI	none
OD only				
ALA1-4200-5R				

SKETCH / COMMENTS

AREA OF EXAMINATION PERFORMED IN ACCORDANCE WITH ATTACHED SNC DRAWING. AREA EXAMINED INCLUDED FW2-SG AND 3.0" INTO ELBOW FROM NOZZLE SIDE OF EXAMINATION AREA.

STEAM GENERATOR 1B

M&TE NO. 198060

CAL. DUE DATE: 7/26/00

EXAMINER	LEVEL	DATE
Wade A. Selby	II	4/19/00
REVIEW		**DATE**
[illegible]	III	4-19-00

[illegible] SNC Level III 4-20-00

ANII Review: CGW and 4/21/00

Steam Generator

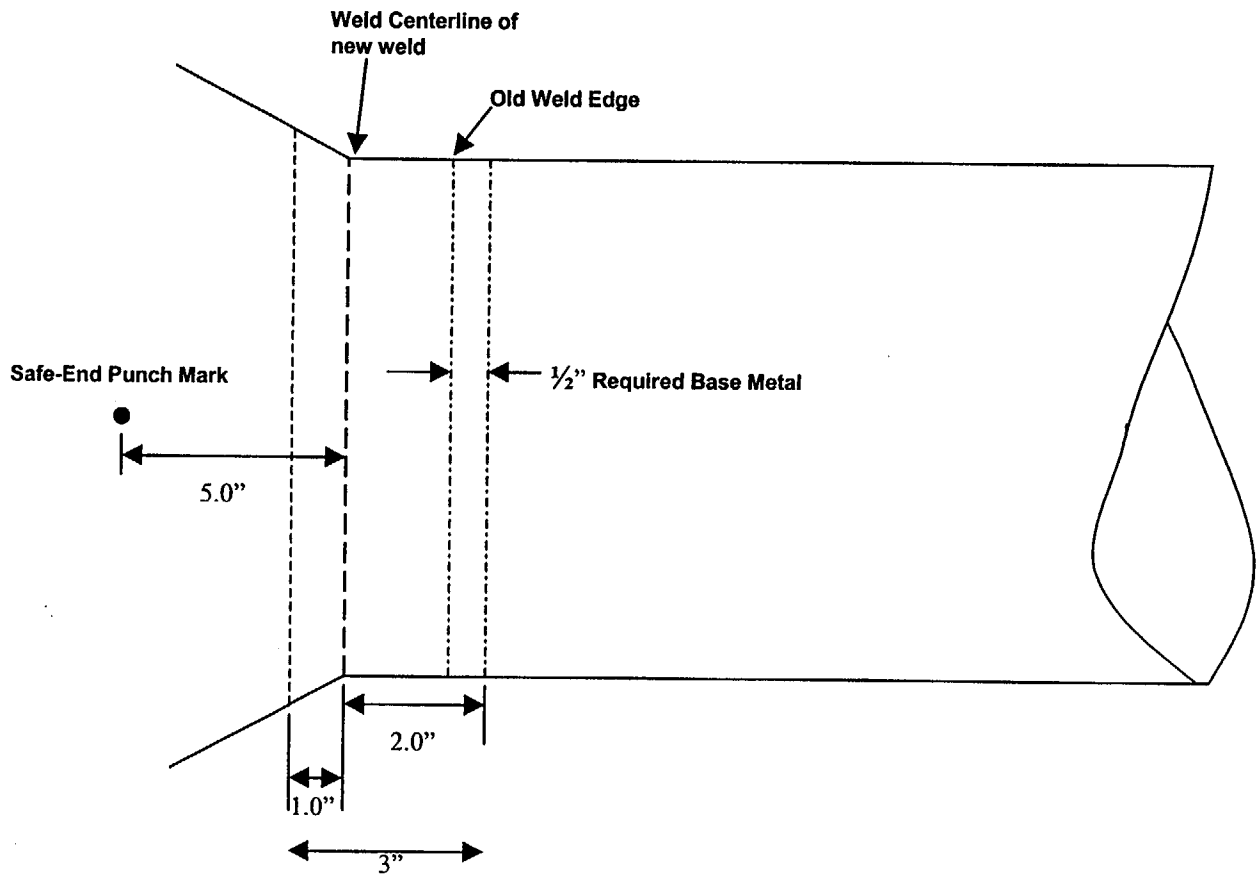

PT Examination of 3" Width will cover all LEGS.

SHARED

FARLEY NUCLEAR PLANT
Ultrasonic Calibration and Examination Record

FNP-0-NDE-100.41
Southern Nuclear Operating Company

Unit	Sketch/Component No.	Date	Sheet No.	
1	ALA1-4200-5R	4/20/00	S00F1U267	Page 1 of 2

Procedure/Rev./TCN	Couplant/Batch No.	Thermometer SN/Cal Due Date	Linearity Sheet No.
FNP-0-NDE-100.41 / 2 / 2A	Ultragel II / 00125	38193 / 8/27/2000	S00F1L001

Instrument			Search Unit		Calibration Block	
Instrument	STAVELEY		Transducer Mfg.	KBA	Cal. Blk. No.	ALA/APR-33
Serial No.	136-896K		Serial No.	D20267/D20268	Thickness	2.45"
	Ax. dB	Circ. dB	Size	2 (1.0")	Cal. Temp.	80
Ref.	58	NA	Frequency/Mode	1.0 / L	Cal. In	1130
Scan	64	NA	"A" Dimension	.82"	Cal. Chk.	N/A
Reject	OFF		Nominal Angle	45	Cal. Out	1350
Frequency	1.0 MHZ		Measured Angle	45	Ref. Blk. No.	NA
Mode	DUAL		Cable Type	RG 174	Reflector	NA
Damping	500 Ohms		Cable Length	15"	Amplitude/Sweep	NA

Axial Scan Calibration				Circ. Scan Calibration			
Cal. Refl.	Signal Amp.	Sweep Div.	Wmax	Cal. Refl.	Signal Amp.	Sweep Div.	Wmax
1/4	30	1.5	.62	NA	NA	NA	NA
1/2	80	3.0	1.2	NA	NA	NA	NA
3/4	45	4.5	1.85	NA	NA	NA	NA
ID	25	6.1	2.5	NA	NA	NA	NA
				NA	NA	NA	NA

Calibration Remarks:
NO ADDITIONAL DB NEEDED TO RAISE ID NOTCH TO DAC.

Comp. Temp.: 80 °F Configuration: SAFE-END TO ELBOW Wo Location V-STAMP Lo Location TDC

Scan Dir.	Results NI	NRI	RI	Ind. No.	% DAC	Length L1	Lmax	L2	Reference Measurement W1	Wmax	W2	Sweep Position S1	Smax	S2	Thickness 1"<--	C/L	-->1"	Notes:
2			●	1	100%	33.95	34	34.1	2.87	3.0	3.125	3.92	4.38	4.7	3.4	3.0	3.2	SEE IER-13 JGA 4-20-00

ELBOW JGA 4-20-00

Examination/Limitation Remarks: EXAMINED FROM ~~SAFE-END~~ SIDE. INDICATION CAN BE SEEN AT LOW AMPUITUDE AT VARIOUS LOCATIONS AROUND THE WELD.

* COMBINED CODE COVERAGE FROM ALL SCANS. JGA 4-20-00

Total Length of Weld	Crown Width	Total Length of Weld Examined	Extent of Perpendicular Scans (W)	Extent of Parallel Scans (L)
106.5	2.2	5 (L) NA 2 (L) NL 7 & 8 (W) NA	5 - from NA to NA 2 - from NL to .9"	From (5) NA to (2) NA

Primary Examiner	Level	Assistant Examiner	Level	Non-Technical Review	Date
JOHN W. BELL John W Bell	II	GEORGE A. MORINI	II	Terry Styron	4-20-00

SNC NDE Level II/III Review	Date	Percentage of Code Coverage	ANII Review	Date
J. Ed Chycoski II-III	4-20-00	* 73.8 %	CGWard	4/21/00

Figure 1

Revision 7

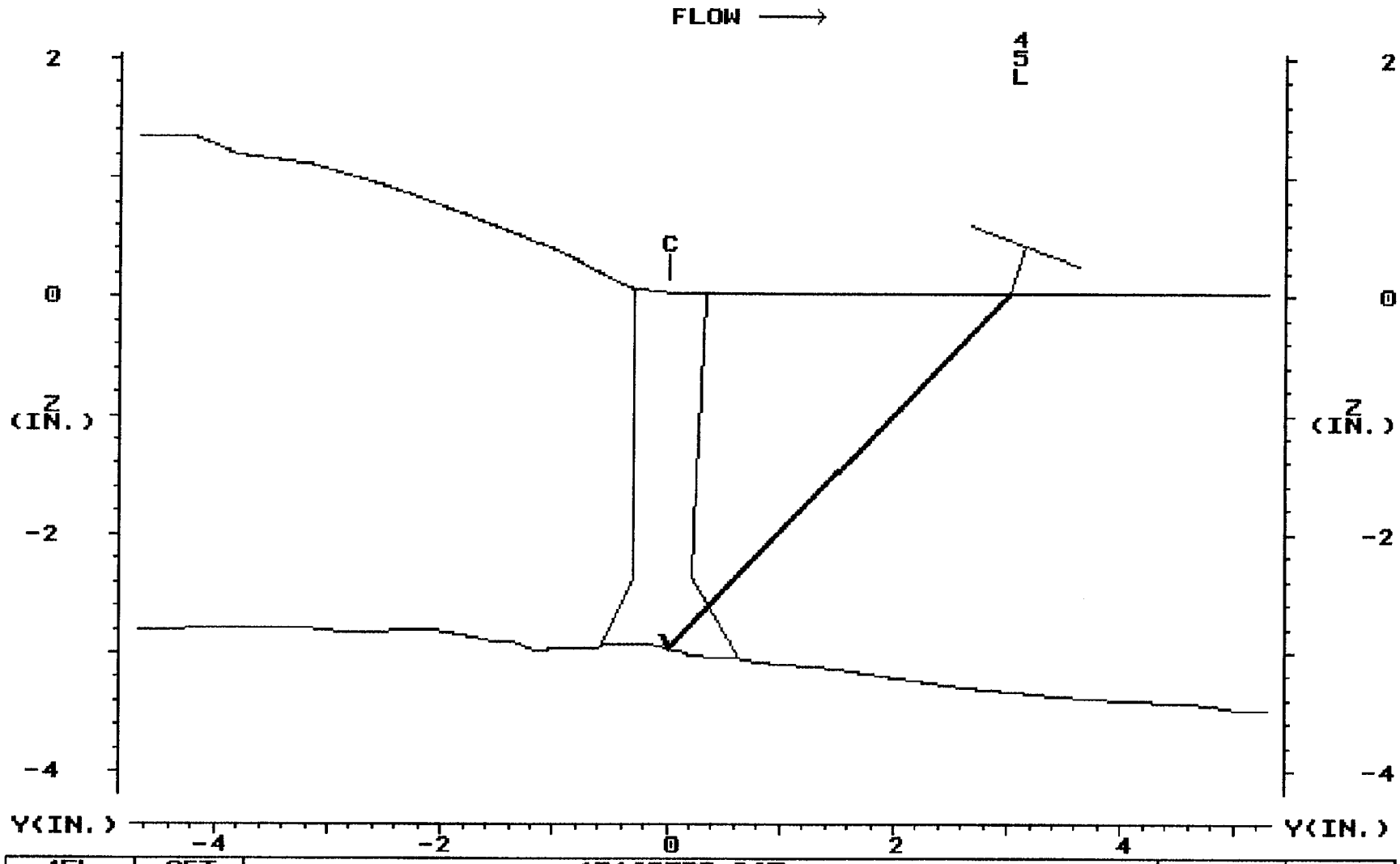

45L	SET	1R16B5RI.DAT							SET
3.10	DEP								DEP
4.38	MP	INDICATION IS FROM ID GEOMETRY CAUSED BY GRINDING OF							MP
46.58	TOF	WELD. ACTUAL ID PROFILE IS SHOWN. SURFACE CREEPING							TOF
	ARC	WAVE TRANSDUCER USED TO SCAN THE WELD FROM THE I.D.							FAN
	GATE	SURFACE. NO PLANAR INDICATIONS FOUND. SEE IER-13.							GATE
0.010	STEP	JEA 4-20-00							STEP
	EXIT	MAKERAY	UTILITY	LEFT	RIGHT	TOP	PRINT	EXIT	EXIT

PLANT: FARLEY UNIT 1 1R16 4/20/00 CIRC. POS.: 34"
SYSTEM: RSG-B RCS COLD LEG ANALYST: J.ERIC AYCOCK L/III
COMPONENT: ALA1-4200-5R CAL. SHEET: S00F1U267

SHARED

FARLEY NUCLEAR PLANT
Ultrasonic Calibration and Examination Record

FNP-0-NDE-100.41
Southern Nuclear Operating Company

Unit	Sketch/Component No.	Date	Sheet No.
1	ALA1-4200-5R	4/20/00	S00F1U268

Page 1 of 3

Procedure/Rev./TCN	Couplant/Batch No.	Thermometer SN/Cal Due Date	Linearity Sheet No.
FNP-0-NDE-100.41 / 2 / 2A	Ultragel II / 00125	38193 / 8/27/2000	S00F1L001

Instrument		Search Unit		Calibration Block	
Instrument	STAVELEY	Transducer Mfg.	KBA	Cal. Blk. No.	ALA-52
Serial No.	136-896K	Serial No.	008NXT/008NXW	Thickness	3.5"
	Ax. dB / Circ. dB	Size	2 (1.0")	Cal. Temp.	70
Ref.	66 / NA	Frequency/Mode	1.0 / L	Cal. In	0930
Scan	72 / NA	"A" Dimension	.82"	Cal. Chk.	N/A
Reject	OFF	Nominal Angle	53	Cal. Out	1445
Frequency	1.0 MHZ	Measured Angle	53	Ref. Blk. No.	NA
Mode	DUAL	Cable Type	RG 174	Reflector	NA
Damping	500 Ohms	Cable Length	15"	Amplitude/Sweep	NA

Axial Scan Calibration				Circ. Scan Calibration			
Cal. Refl.	Signal Amp.	Sweep Div.	Wmax	Cal. Refl.	Signal Amp.	Sweep Div.	Wmax
1/4	80	1.5	1.2	NA	NA	NA	NA
1/2	70	3.0	1.95	NA	NA	NA	NA
3/4	40	4.5	2.95	NA	NA	NA	NA
ID	15	6.0	4.2	NA	NA	NA	NA
				NA	NA	NA	NA

Calibration Remarks:
NO ADDITIONAL dB NEEDED TO RAISE NOTCH TO DAC.

Comp. Temp.: 80 °F Configuration: SAFE-END TO ELBOW

Wo Location V-STAMP Lo Location TDC

Scan Dir.	Results NI	NRI	RI	Ind. No.	% DAC	Length L1	Lmax	L2	Reference Measurement W1	Wmax	W2	Sweep Position S1	Smax	S2	Thickness 1"<--	C/L	--->1"	Notes:
5		●		NA														

Examination/Limitation Remarks: EXAMINED FROM SAFE-END SIDE.

Total Length of Weld	Crown Width	Total Length of Weld Examined	Extent of Perpendicular Scans (W)	Extent of Parallel Scans (L)
106.5	2.2	*Combined code coverage from all scans Bal 4-2000	5 (L) NL 2 (L) NA 7 & 8 (W) NA 5 - from NL to .9" 2 - from NA to NA	From (5) NA to (2) NA

Primary Examiner	Level	Assistant Examiner	Level	Non-Technical Review	Date
JOHN W. BELL John W Bell	II	GEORGE A. MORINI	II	Terry Styen	4-20-00

SNC NDE Level II/III Review	Date	Percentage of Code Coverage	ANII Review	Date
Gary A. Loftin	4-2000	*73.8 %	CGWard	4/21/00

Figure 1

Revision 7

WELD NO. ALA1-42005R

SHEET No. S00F1U268

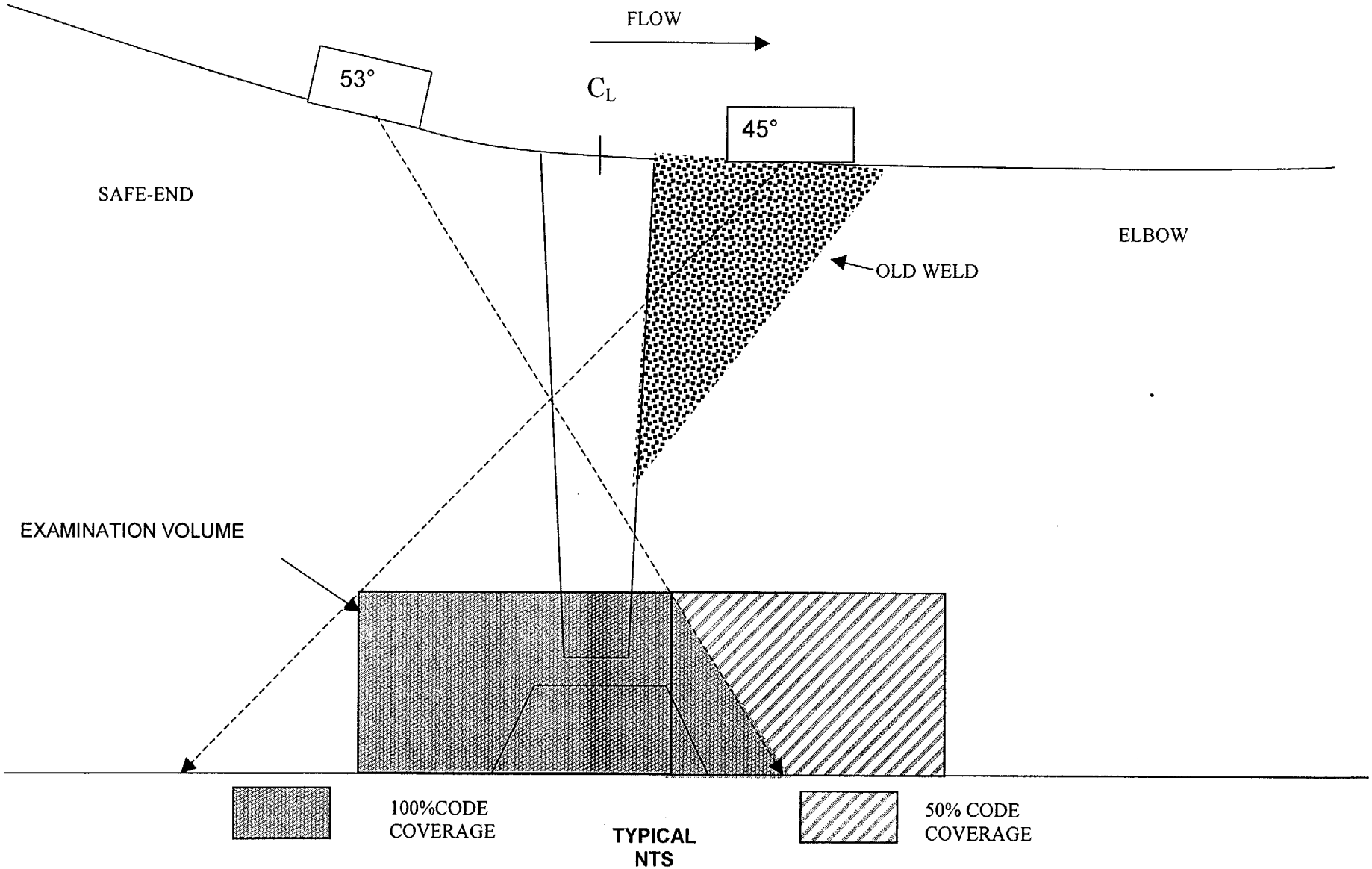

AX CODE COVERAGE PLOT
AX. CODE COVERAGE OBAINED =83.2%
CIRC CODE COVERAGE OBAINED =64.5%
TOTAL CODE COVERAGE OBAINED =73.8%
SEE PAGE 3 OF 3 FOR CIRC CODE COVERAGE PLOT

WELD NO. ALA1-42005R

SHEET No. S00F1U268

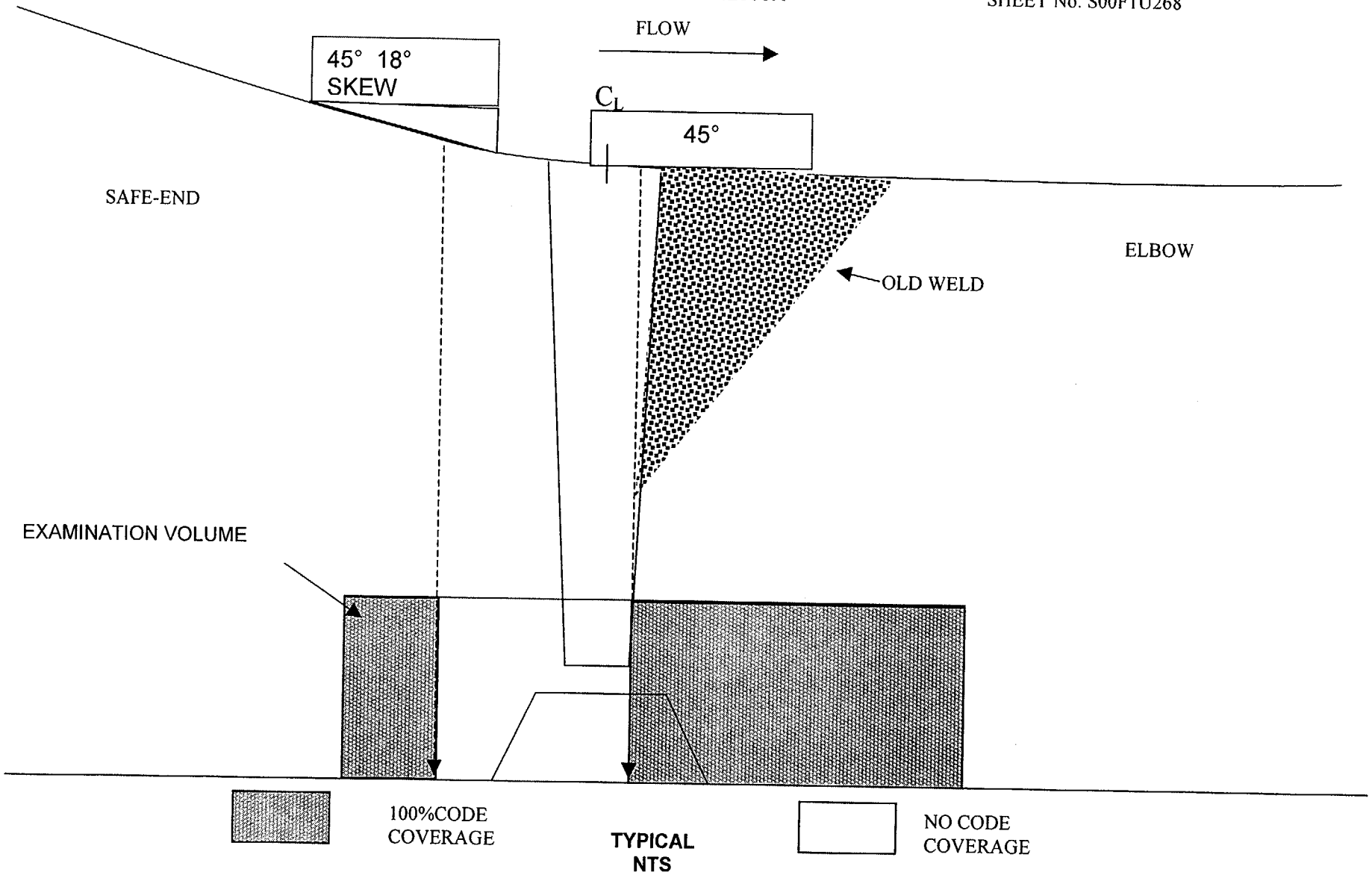

TYPICAL
NTS

CIRC CODE COVERAGE PLOT
CIRC CODE COVERAGE OBAINED =64.5%
AX. CODE COVERAGE OBAINED =83.2%
TOTAL CODE COVERAGE OBAINED =73.8%
SEE PAGE 3 OF 3 FOR CIRC CODE COVERAGE PLOT

SHARED

FARLEY NUCLEAR PLANT
Ultrasonic Calibration and Examination Record

FNP-0-NDE-100.41
Southern Nuclear Operating Company

Unit	Sketch/Component No.	Date	Sheet No.
1	ALA1-4200-5R	4/20/00	S00F1U270

Page 1 of 2

Procedure/Rev./TCN	Couplant/Batch No.	Thermometer SN/Cal Due Date	Linearity Sheet No.
FNP-0-NDE-100.41 / 2 / 2A	Ultragel II / 00125	38193 / 8/27/2000	S00F1L001

Instrument			Search Unit		Calibration Block	
Instrument	STAVELEY		Transducer Mfg.	KBA	Cal. Blk. No.	ALA-52
Serial No.	136-896K		Serial No.	H12393/H12394	Thickness	3.5"
	Ax. dB	Circ. dB	Size	2 (1.0")	Cal. Temp.	70
Ref.	NA	70.4	Frequency/Mode	1.0 / L	Cal. In	0940
Scan	NA	76.4	"A" Dimension	.82"	Cal. Chk.	N/A
Reject	OFF		Nominal Angle	45	Cal. Out	1430
Frequency	1.0 MHZ		Measured Angle	45	Ref. Blk. No.	NA
Mode	DUAL		Cable Type	RG 174	Reflector	NA
Damping	500 Ohms		Cable Length	15"	Amplitude/Sweep	NA

Axial Scan Calibration				Circ. Scan Calibration			
Cal. Refl.	Signal Amp.	Sweep Div.	Wmax	Cal. Refl.	Signal Amp.	Sweep Div.	Wmax
NA	NA	NA	NA	1/4	40	1.5	.75
NA	NA	NA	NA	1/2	80	3.0	1.8
NA	NA	NA	NA	3/4	65	4.5	2.9
NA	NA	NA	NA	ID	20	6.2	3.9
NA	NA	NA	NA				

Calibration Remarks:
NO ADDITIONAL DB NEEDED TO RAISE ID NOTCH TO DAC. 18° TILT WEDGE USED FOR EXIMINATION, CALIBRATED WITH NORMAL WEDGES.

Comp. Temp.: 80 °F Configuration: SAFE-END TO ELBOW Wo Location V-STAMP Lo Location TDC

Scan Dir.	Results NI	NRI	RI	Ind. No.	% DAC	Length L1	Lmax	L2	Reference Measurement W1	Wmax	W2	Sweep Position S1	Smax	S2	Thickness 1"<--	C/L	-->1"	Notes:
7		●		NA														

Examination/Limitation Remarks: EXAMINED FROM SAFE-END SIDE.

*Combined Code Coverage from all scans Gal 4-20-00

Total Length of Weld	Crown Width	Total Length of Weld Examined	Extent of Perpendicular Scans (W)	Extent of Parallel Scans (L)
106.5	2.2	5 (L) NA 2 (L) NA 7 & 8 (W) NL	5 - from NA to NA 2 - from to NA	From (5) NL to (2) .5"

Primary Examiner	Level	Assistant Examiner	Level	Non-Technical Review	Date
JOHN W. BELL John W Bell	II	GEORGE A. MORINI	II	Terry Styron	4-20-00

SNC NDE Level II/III Review		Date	Percentage of Code Coverage	ANII Review	Date
Gary R. Rightler	III	4-20-00	*73.8 %	CG Wood	4/21/00

Figure 1

Revision 7

April 19, 2000
ASME Code Coverage for Steam Generator Hot Leg /Cold Leg

The following list is the numeric values assigned based on the OD profile and contour taken from A Loop. One dimension is provided which includes the new narrow groove weld and a portion of the old existing weld. The drawing to be used has a thickness of 3.3". The inner 1/3t dimension to be used will be 1.1". The width is based on the toe of the ID weld from the safe end side to the toe of the old existing OD weld, which measures 2.1".

AXIAL SCANS
Code requires .25" on each side of the above described weld toes.
Code coverage = 2.6" (width) x 1.1" (height) = 2.86 sq. "
Scan from elbow side: no limitations, 2.86sq "/ 2.86 sq. " = 100%
Scan from safe end side: limited due to taper / apex, two areas,
Box 1.35" x 1.1" = 1.485 sq. "
Triangle ½ x b x h = .5x.75"x1.1"= .413 sq. "
Total = 1.898 sq. " / 2.86 sq. " = 66.3%

CIRC. SCANS
Code requires .5" on each side of the above described weld toes.
Code coverage = 3.1" (width) x 1.1" (height) = 3.41 sq. "
Scan from safe end CW direction: .35" (width) x 1.1" (height) = .38 sq. "
Scan from elbow side CW direction: 1.65 " (width) x 1.1" (height) = 1.815 sq. "
Total = 2.2 sq. " / 3.41 sq. " = 64.5%

Scan from safe end CCW direction: .35" (width) x 1.1" (height) = .38 sq. "
Scan from elbow side CCW direction: 1.65 " (width) x 1.1" (height) = 1.815 sq. "
Total = 2.2 sq. " / 3.41 sq. " = 64.5%

Total ASME Code Coverage for the Weld is 73.8%. This is based on adding all four required scans, 100% + 66.3% + 64.5% + 64.5% = 295.3%
295.3/4 = 73.8%

NOTE: The coverage for the CW / CCW scans was not based on the centerline of the two transducers, but the centerline of one of the dual elements. ASME Section XI, Appendix III-2410(a) requires a 50% overlap between scans. Smaller transducers were tried to obtain maximum code coverage. Due to the metallurgical grain structure of the materials, a dual, 1.0 MHz, 1" diameter, transducer with curved shoes was used. On the safe end, wedges with an 18-degree tilt were used for the CW/CCW scans. The maximum area that could be scanned was examined. Supplement 4, (a) (1) of ASME Section XI requires a 35-degree or greater for the beam angle at the ID surface when using refracted Longitudinal waves. Only one direction coverage of the axial scan on the elbow side was obtained. RL waves are used with a 4/8-node calibration. Shear waves to provide a 6/8 vee-path is not practical for the cast stainless steel examination on the elbow. Thus we were limited to 66.3% from this direction.

SHARED

FARLEY NUCLEAR PLANT
Ultrasonic Calibration and Examination Record

FNP-NDE-100.41
Southern Nuclear Operating Company

Unit	Sketch/Component No.	Date	Sheet No.	Page of
1	ALA1-4200-5R	4/20/00	S00F1U269	

Procedure/Rev./TCN	Couplant/Batch No.	Thermometer SN/Cal Due Date	Linearity Sheet No.
FNP-NDE-100.41 / N/A / N/A	Ultragel II / 00125	38193 / 8/27/2000	S00F1L001

Instrument			Search Unit		Calibration Block	
Instrument	STAVELEY		Transducer Mfg.	KBA	Cal. Blk. No.	ALA/APR-33
Serial No.	136-896K		Serial No.	008NXR/008NXV	Thickness	2.45"
	Ax. dB	Circ. dB	Size	2 (1.0")	Cal. Temp.	80
Ref.	NA	71.2	Frequency/Mode	1.0 / L	Cal. In	1135
Scan	NA	77.2	"A" Dimension	.82"	Cal. Chk.	N/A
Reject	OFF		Nominal Angle	45	Cal. Out	1354
Frequency	1.0 MHZ		Measured Angle	45	Ref. Blk. No.	NA
Mode	DUAL		Cable Type	RG 174	Reflector	NA
Damping	500 Ohms		Cable Length	15"	Amplitude/Sweep	NA

Axial Scan Calibration				Circ. Scan Calibration			
Cal. Refl.	Signal Amp.	Sweep Div.	Wmax	Cal. Refl.	Signal Amp.	Sweep Div.	Wmax
NA	NA	NA	NA	1/4	30	1.5	.65
NA	NA	NA	NA	1/2	80	3.0	1.3
NA	NA	NA	NA	3/4	50	4.5	1.9
NA	NA	NA	NA	ID	35	5.8	2.65
NA	NA	NA	NA				

Calibration Remarks:
NO ADDITIONAL dB NEEDED TO RAISE NOTCH TO DAC.

Comp. Temp.: 80 °F Configuration: **SAFE-END TO ELBOW** Wo Location **V-STAMP** Lo Location **TDC**

Scan Dir.	Results NI	NRI	RI	Ind. No.	% DAC	Length L1	Lmax	L2	Reference Measurement W1	Wmax	W2	Sweep Position S1	Smax	S2	Thickness 1"<--	C/L	-->1"	Notes:
7/8		●		NA														

Examination/Limitation Remarks: **EXAMINED FROM ELBOW SIDE.**

* Code Coverage from all scans Tab 4-21-00

Total Length of Weld	Crown Width	Total Length of Weld Examined	Extent of Perpendicular Scans (W)	Extent of Parallel Scans (L)
106.5	2.2	5 (L) NA 2 (L) NA 7 & 8 (W) NL	5 - from NA to NA 2 - from NA to NA	From (5) .2" to (2) NL

Primary Examiner	Level	Assistant Examiner	Level	Non-Technical Review	Date
JOHN W. BELL John W Bell	II	GEORGE A. MORINI	II	Terry Steyer	4-21-00

SNC NDE Level II/III Review	Date	Percentage of Code Coverage	ANII Review	Date
J. Eric Clyncke L-III	4-21-00	73.8 %		4/21/00

Figure 1

Revision 7

SHaRED

FARLEY NUCLEAR PLANT
Ultrasonic Calibration and Examination Record

FNP-NDE-100.41
Southern Nuclear Operating Company

Unit	Sketch/Component No.	Date	Sheet No.	Page
1	ALA1-4200-5R	4/20/00	S00F1U271	1 of 1

Procedure/Rev./TCN	Couplant/Batch No.	Thermometer SN/Cal Due Date	Linearity Sheet No.
FNP-NDE-100.41 / N/A / N/A	Ultragel II / 00125	38193 / 8/27/2000	S00F1L001

Instrument			Search Unit		Calibration Block	
Instrument	STAVELEY		Transducer Mfg.	KBA	Cal. Blk. No.	ALA-52
Serial No.	136-896K		Serial No.	G14510 / G14511	Thickness	3.5"
	Ax. dB	Circ. dB	Size	2 (1.0")	Cal. Temp.	70
Ref.	NA	71.2	Frequency/Mode	1.0 / L	Cal. In	0950
Scan	NA	77.2	"A" Dimension	.82"	Cal. Chk.	N/A
Reject	OFF		Nominal Angle	45	Cal. Out	1440
Frequency	1.0 MHZ		Measured Angle	45	Ref. Blk. No.	NA
Mode	DUAL		Cable Type	RG 174	Reflector	NA
Damping	500 Ohms		Cable Length	15"	Amplitude/Sweep	NA

Axial Scan Calibration				Circ. Scan Calibration			
Cal. Refl.	Signal Amp.	Sweep Div.	Wmax	Cal. Refl.	Signal Amp.	Sweep Div.	Wmax
NA	NA	NA	NA	1/4	40	1.5	.75
NA	NA	NA	NA	1/2	80	3.0	1.8
NA	NA	NA	NA	3/4	65	4.5	2.9
NA	NA	NA	NA	ID	25	6.2	3.9
NA	NA	NA	NA				

Calibration Remarks:
2.6 dB ADDED TO RAISE ID NOTCH TO DAC, (68.6 + 2.6 = 71.2). 18° TILT WEDGE USED FOR EXIMINATION, CALIBRATED WITH NORMAL WEDGES.

Comp. Temp.: **80** °F Configuration: **SAFE-END TO ELBOW** Wo Location **V-STAMP** Lo Location **TDC**

Scan Dir.	Results NI	NRI	RI	Ind. No.	% DAC	Length L1	Lmax	L2	Reference Measurement W1	Wmax	W2	Sweep Position S1	Smax	S2	Thickness 1"<--	C/L	-->1"	Notes:
8		●		NA														

Examination/Limitation Remarks: **EXAMINED FROM SAFE-END SIDE.**

* Code Coverage from all scans Gal 4-20-00

Total Length of Weld	Crown Width	Total Length of Weld Examined	Extent of Perpendicular Scans (W)	Extent of Parallel Scans (L)
106.5	2.2	5 (L) NA 2 (L) NA 7 & 8 (W) NL	5 - from NA to NA 2 - from NA to NA	From (5) NL to (2) .5"

Primary Examiner	Level	Assistant Examiner	Level	Non-Technical Review	Date
JOHN W. BELL John W Bell	II	GEORGE A. MORINI	II	Terry Steyer	4-20-00

SNC NDE Level II/III Review		Date	Percentage of Code Coverage	ANII Review	Date
Daniel Griffin	III	4-20-00	*73.8 %	CG Wamel	4/21/00

Figure 1

Revision 7

Ultrasonic Thickness and Contour Examination Record — **Southern Nuclear Operating Company**

Unit	Weld Number	Sheet No.	Date
1	ALA1-4200-5R	S00F1U273	4/20/2000

/Drawing Number	Couplant/Batch Number	Instrument Manufacturer
ALA1-4200	ULTRAGEL II / 00125	STAVELEY

Material Type	Calibration Standard/ Serial No.	Model Number	Serial Number
☐ C/S ☒ S/S Other	SS IIW / 86-4245	SONIC 136	136-896K

Examiner	SNT Level	Transducer Manufacturer	Type	Size
JOHN W. BELL John W Bell	II	KBA	0°	.75

Examiner	SNT Level	Serial Number	Frequency
GEORGE A. MORINI	II	B25613	1.0 MHz

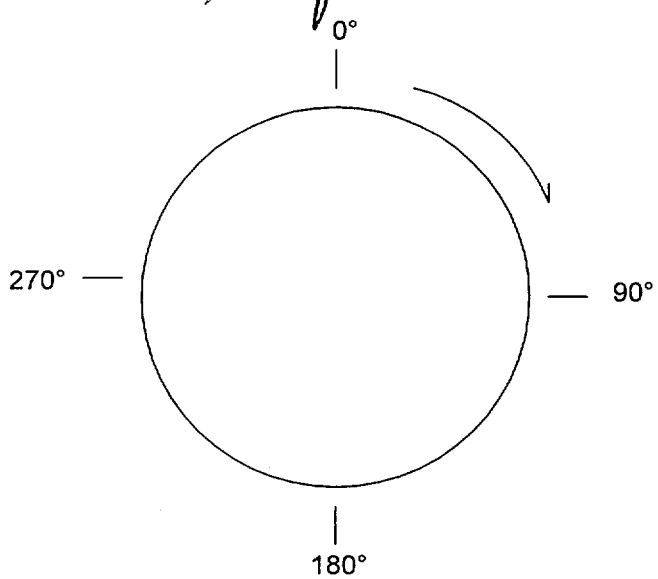

Location	0°	90 °	180°	270°
A	4.2	4.0	4.1	4.1
B	3.3	3.3	3.4	3.3
C	3.0	3.0	3.0	3.0
D	3.2	3.2	3.2	3.2
E	3.4	3.4	3.4	3.4

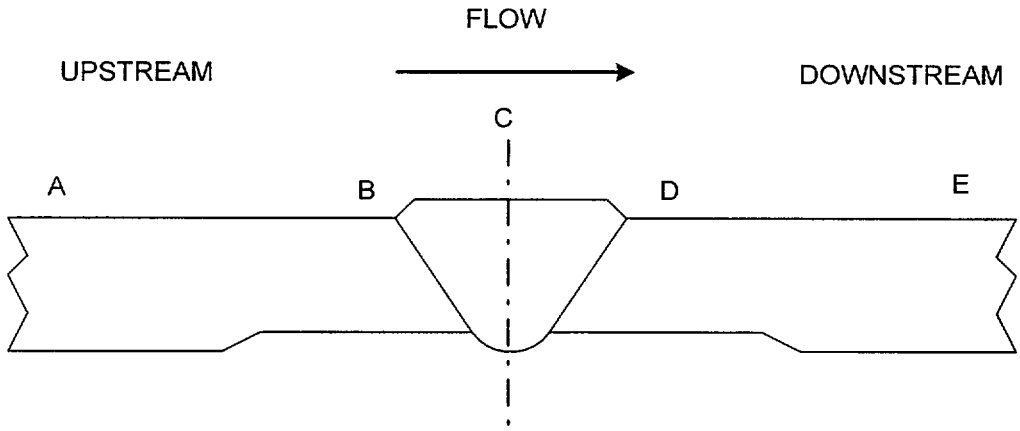

COUNTERBORE

NA	NA
UPSTREAM	DOWNSTREAM

REMARKS:

Level II/III Review	Level	Date	Non-Technical Review	Date
[illegible]	III	4-20-00	Terry Styron	4-20-00

Page 1 of 1

B COLD LEG

SHEET No. S00F1U273

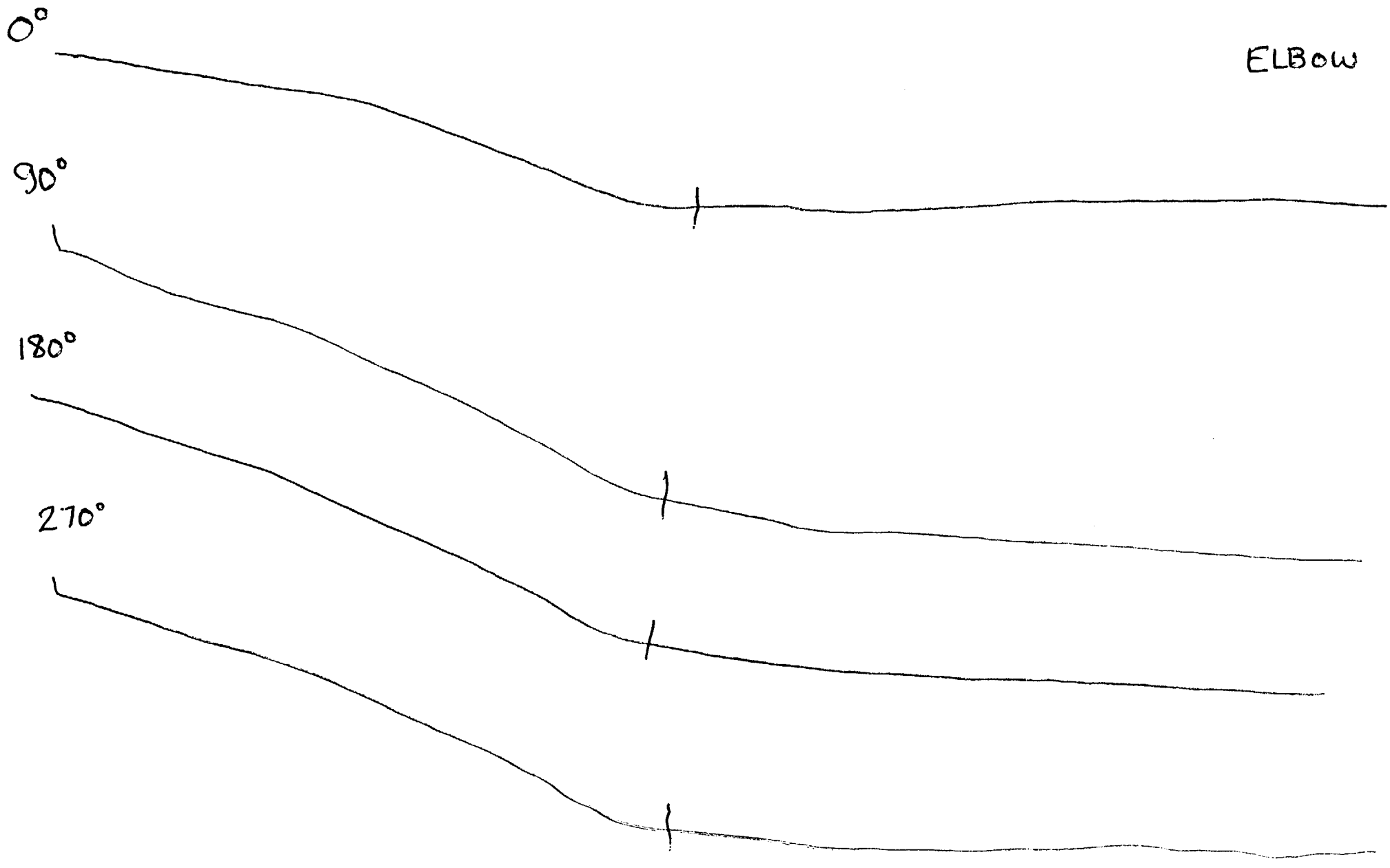

BECHTEL

WPIR #	NONDESTRUCTIVE EXAMINATION REPORT LIQUID PENETRANT EXAMINATION		REPORT #
P-RCC-060			PT-00-152
JOB #	JOB NAME	SURFACE CONDITION	DATE
23734	FARLEY UNIT 1 SGR	☒ GROUND ☐ AS WELDED	04-18-00
ISO / DWG #	ITEM / COMP ID	TIME OF EXAM ☒ N/A ☐ PRE-PWHT ☐ POST-PWHT	COMPONENT TEMP
FSK-M-146	FW1-SG		80°F
CODE / WELD CLASS	COMPONENT CONFIGURATION	MATL TYPE	PROCEDURE & REVISION
ASME XI CL I	HOT LEG / EL TO SAFE-END	☐ C/S ☒ S/S ☐ DISSIM METAL	PT (SR)-ASME III / XI REV. 2

	CLEANER/REMOVER	PENETRANT	DEVELOPER
MFR	MAGNAFLUX	MAGNAFLUX	MAGNAFLUX
TYPE	SKC-S	SKL-SP	SKD-S2
BATCH #	99M01K	98J11K	99G09K

INDICATION CODE: NI=NO INDICATIONS NRI=NO RECORDABLE INDICATIONS C=CRACK
ROUND=ROUNDED INDICATION LINEAR=LINEAR INDICATION

PART OR WELD #	ACC (√)	REJ (√)	IND CODE	REMARKS
FW1-SG	✓		NRI	None
RCS "C"				
Hot Leg				

SKETCH / COMMENTS

AREA OF EXAMINATION PERFORMED IN ACCORDANCE WITH ATTACHED SNC DRAWING. AREA EXAMINED INCLUDED FW1-SG AND 3.0" INTO ELBOW FROM NOZZLE SIDE OF EXAMINATION AREA.

STEAM GENERATOR 1C

*FNP ISI # ALA 1-4300-4R (100% coverage on O.D.)

M&TE NO. 198057

CAL. DUE DATE: 07-26-00

EXAMINER	LEVEL	DATE
Russell Yancy (Russell Yancy)	II	04-18-00
REVIEW		**DATE**
	III	4-20-00

Gary A. Lotter SNC Level III 4-20-00
2nd review: CG Wand 4/22/00

Steam Generator

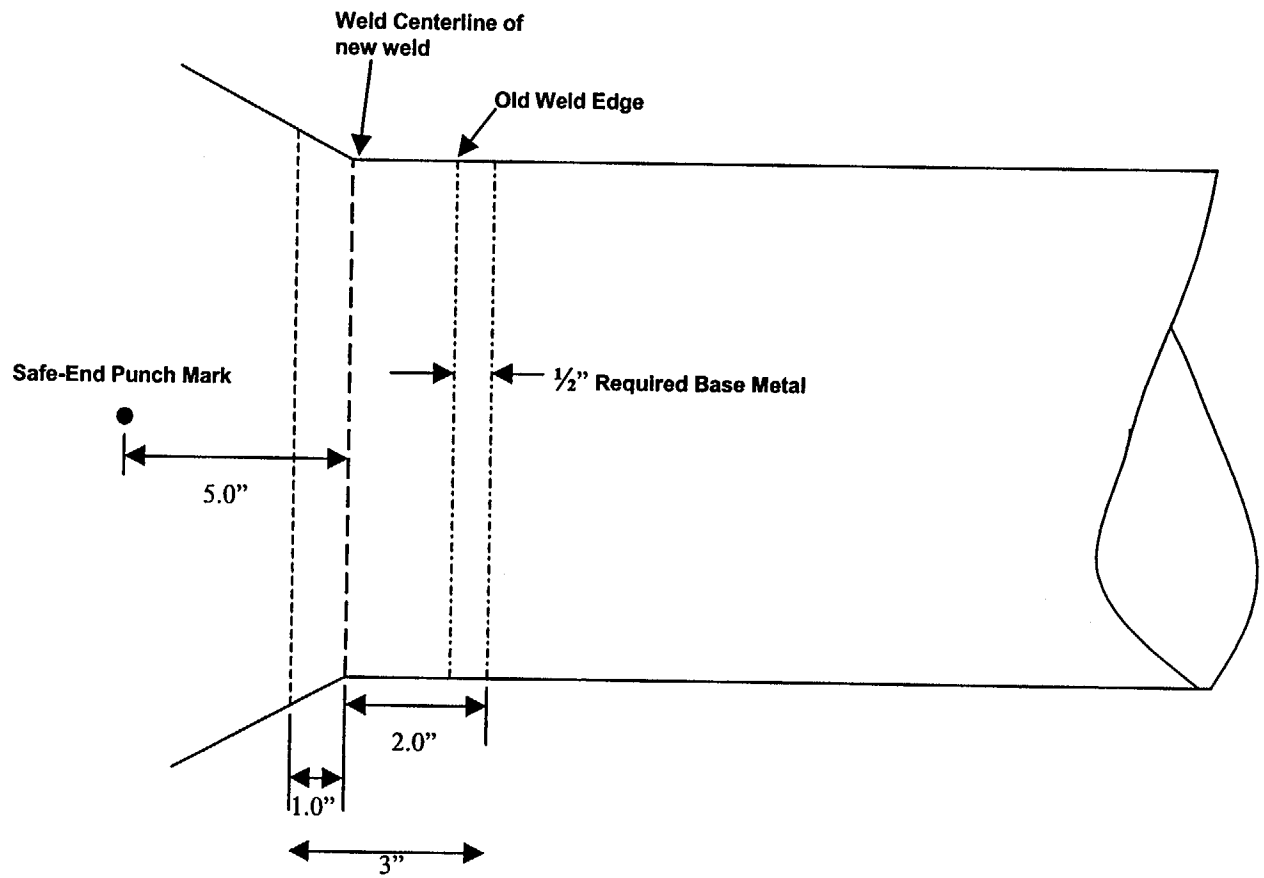

PT Examination of 3" Width will cover all LEGS.

SHARED

FARLEY NUCLEAR PLANT
Ultrasonic Calibration and Examination Record

FNP-0-NDE-100.41
Southern Nuclear Operating Company

Unit	Sketch/Component No.	Date	Sheet No.	
1	ALA1-4300-4R	4/19/00	S00F1U253	Page 1 of 3

Procedure/Rev./TCN	Couplant/Batch No.	Thermometer SN/Cal Due Date	Linearity Sheet No.
FNP-0-NDE-100.41 / 2 / 2A	Ultragel II / 00125	38193 / 8/27/2000	S00F1L001

Instrument		Search Unit		Calibration Block	
Instrument	STAVELEY	Transducer Mfg.	KBA	Cal. Blk. No.	ALA/APR-33
Serial No.	136-896K	Serial No.	D20267/D20268	Thickness	2.45"
	Ax. dB / Circ. dB	Size	2 (1.0")	Cal. Temp.	80
Ref.	58 / NA	Frequency/Mode	1.0 / L	Cal. In	1225
Scan	64 / NA	"A" Dimension	.82"	Cal. Chk.	N/A
Reject	OFF	Nominal Angle	45	Cal. Out	1450
Frequency	1.0 MHZ	Measured Angle	45	Ref. Blk. No.	NA
Mode	DUAL	Cable Type	RG 174	Reflector	NA
Damping	500 Ohms	Cable Length	15"	Amplitude/Sweep	NA

Axial Scan Calibration				Circ. Scan Calibration			
Cal. Refl.	Signal Amp.	Sweep Div.	Wmax	Cal. Refl.	Signal Amp.	Sweep Div.	Wmax
1/4	30	1.5	.62	NA	NA	NA	NA
1/2	80	3.0	1.2	NA	NA	NA	NA
3/4	45	4.5	1.85	NA	NA	NA	NA
ID	25	6.1	2.5	NA	NA	NA	NA
				NA	NA	NA	NA

Calibration Remarks:
NO ADDITIONAL DB NEEDED TO RAISE ID NOTCH TO DAC.

Comp. Temp.: 77 °F Configuration: ELBOW TO SAFE-END Wo Location V-STAMP Lo Location TDC

Scan Dir.	Results NI	NRI	RI	Ind. No.	% DAC	Length L1	Lmax	L2	Reference Measurement W1	Wmax	W2	Sweep Position S1	Smax	S2	Thickness 1"<--	C/L	-->1"	Notes:
5		●		NA														

Examination/Limitation Remarks:

EXAMINED FROM ELBOW SIDE.

* Combined Code Coverage from all scans Hal 4-20-00

Total Length of Weld	Crown Width	Total Length of Weld Examined	Extent of Perpendicular Scans (W)	Extent of Parallel Scans (L)
106.5	2.2	5 (L) NL 2 (L) NA 7 & 8 (W) NA	5 - from NL to .6"	2 - from NA to NA From (5) NA to (2) NA

Primary Examiner	Level	Assistant Examiner	Level	Non-Technical Review	Date
JOHN W. BELL John W Bell	II	GEORGE A. MORINI	II	Terry Styer	4-19-00
SNC NDE Level II/III Review		Date	Percentage of Code Coverage	ANII Review	Date
Harry A. Lightsey	III	4-20-00	* 73.8 %		4/22/00

Figure 1

Revision 7

WELD NO. ALA1-43004R

SHEET No. 500 FLU253

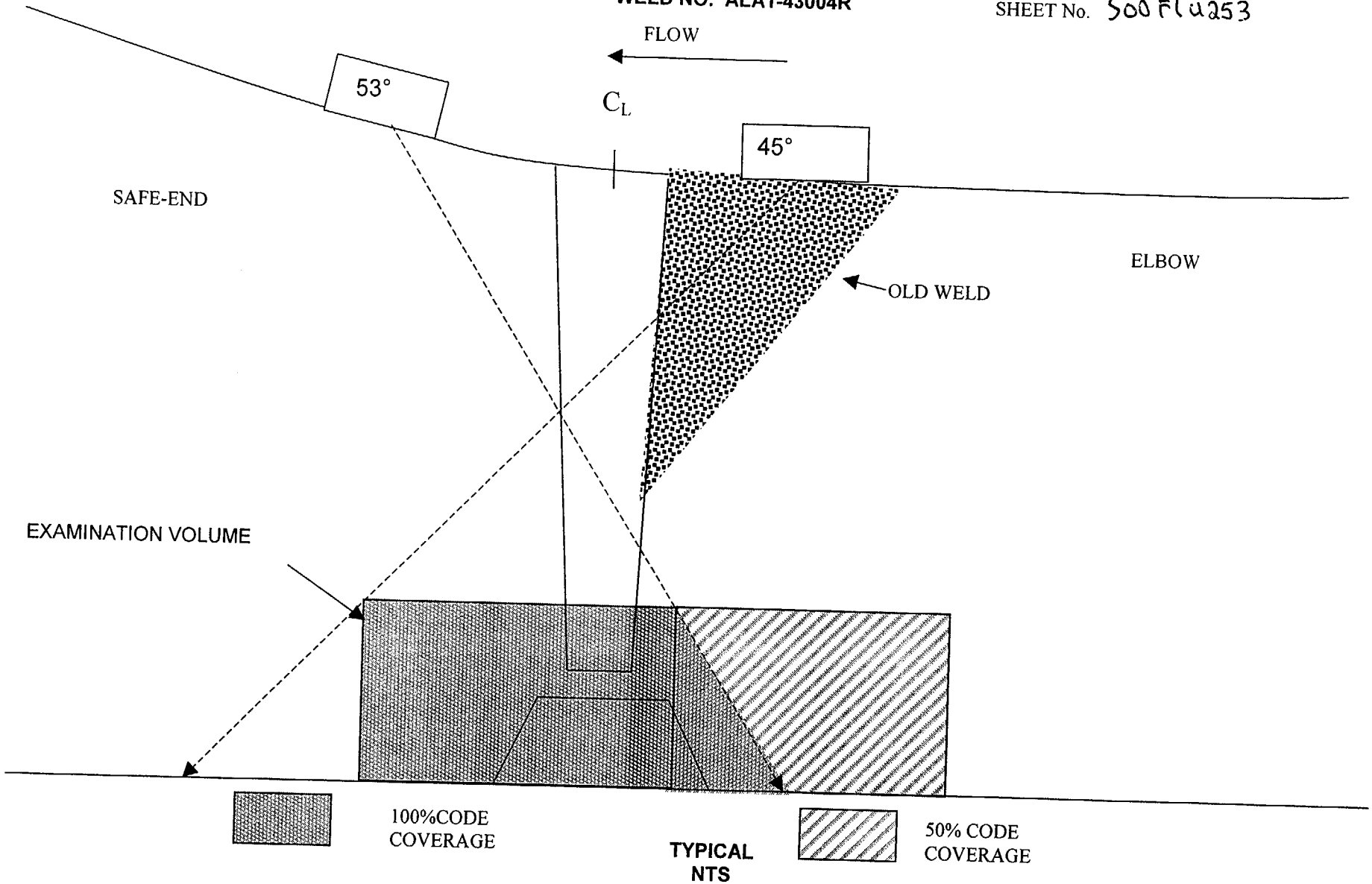

AX CODE COVERAGE PLOT
AX. CODE COVERAGE OBAINED =83.2%
CIRC CODE COVERAGE OBAINED =64.5%
TOTAL CODE COVERAGE OBAINED =73.8%
SEE PAGE 3 OF 3 FOR CIRC CODE COVERAGE PLOT

WELD NO. ALA1-43004R SHEET No. 500F14253

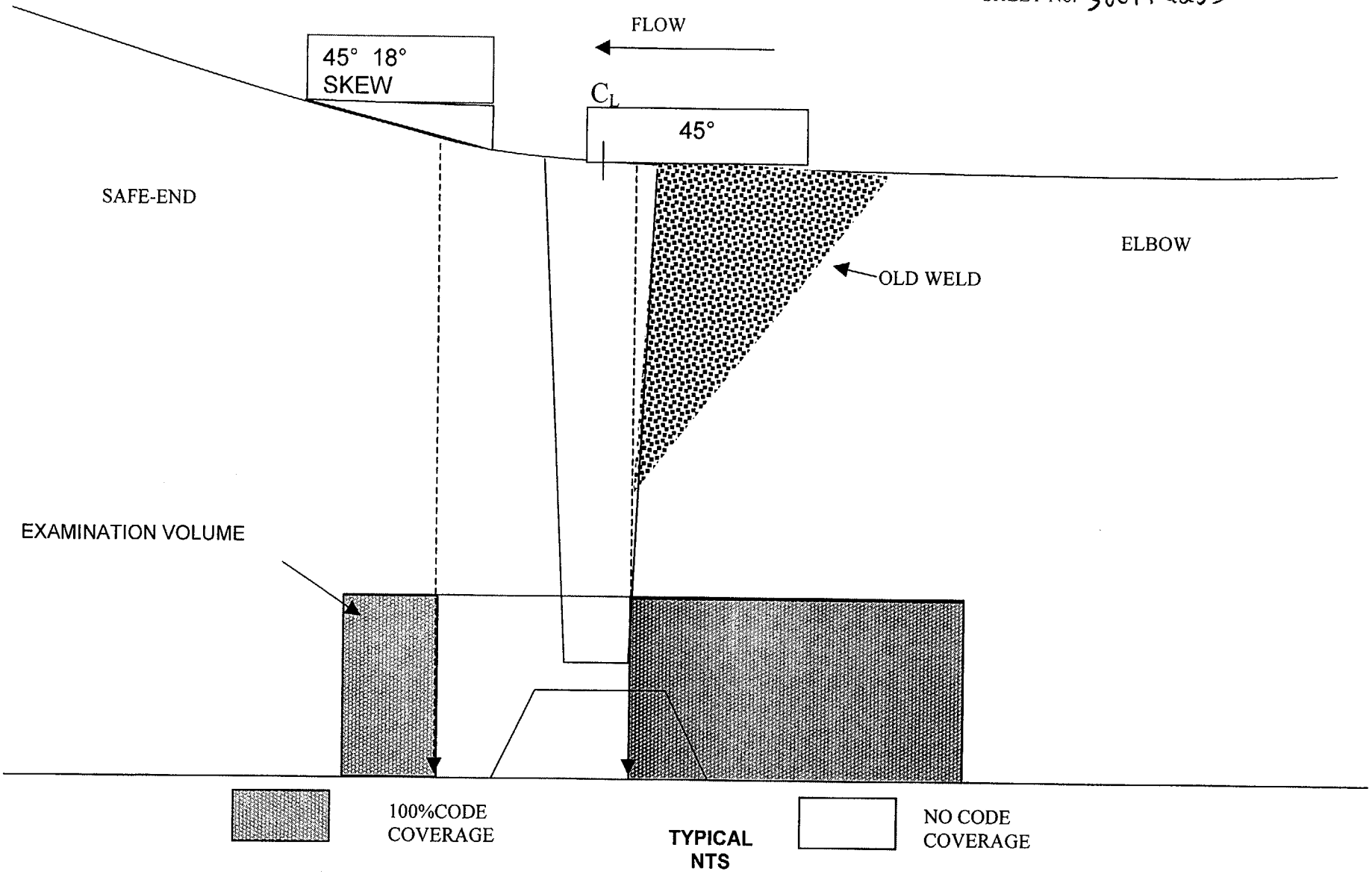

CIRC CODE COVERAGE PLOT
CIRC CODE COVERAGE OBAINED =64.5%
AX. CODE COVERAGE OBAINED =83.2%
TOTAL CODE COVERAGE OBAINED =73.8%
SEE PAGE 3 OF 3 FOR CIRC CODE COVERAGE PLOT

SHARED

FARLEY NUCLEAR PLANT
Ultrasonic Calibration and Examination Record

FNP-0-NDE-100.41
Southern Nuclear Operating Company

Unit	Sketch/Component No.	Date	Sheet No.	
1	ALA1-4300-4R	4/19/00	S00F1U254	Page 1 of 1

Procedure/Rev./TCN	Couplant/Batch No.	Thermometer SN/Cal Due Date	Linearity Sheet No.
FNP-0-NDE-100.41 / 2 / 2A	Ultragel II / 00125	38193 / 8/27/2000	S00F1L001

Instrument		Search Unit		Calibration Block	
Instrument	STAVELEY	Transducer Mfg.	KBA	Cal. Blk. No.	ALA-52
Serial No.	136-896K	Serial No.	G14510 / G14511	Thickness	3.5"
	Ax. dB / Circ. dB	Size	2 (1.0")	Cal. Temp.	70
Ref.	NA / 71.2	Frequency/Mode	1.0 / L	Cal. In	1130
Scan	NA / 77.2	"A" Dimension	.82"	Cal. Chk.	N/A
Reject	OFF	Nominal Angle	45	Cal. Out	1455
Frequency	1.0 MHZ	Measured Angle	45	Ref. Blk. No.	NA
Mode	DUAL	Cable Type	RG 174	Reflector	NA
Damping	500 Ohms	Cable Length	15"	Amplitude/Sweep	NA

Axial Scan Calibration				Circ. Scan Calibration			
Cal. Refl.	Signal Amp.	Sweep Div.	Wmax	Cal. Refl.	Signal Amp.	Sweep Div.	Wmax
NA	NA	NA	NA	1/4	40	1.5	.75
NA	NA	NA	NA	1/2	80	3.0	1.8
NA	NA	NA	NA	3/4	65	4.5	2.9
NA	NA	NA	NA	ID	25	6.2	3.9
NA	NA	NA	NA				

Calibration Remarks:
2.6 dB ADDED TO RAISE ID NOTCH TO DAC, (68.6 + 2.6 = 71.2). 18° TILT WEDGE USED FOR EXIMINATION, CALIBRATED WITH NORMAL WEDGES.

Comp. Temp.: 77 °F Configuration: **ELBOW TO SAFE-END** Wo Location **V-STAMP** Lo Location **TDC**

Scan Dir.	Results NI	NRI	RI	Ind. No.	% DAC	Length L1	Lmax	L2	Reference Measurement W1	Wmax	W2	Sweep Position S1	Smax	S2	Thickness 1"<--	C/L	-->1"	Notes:
7		●		NA														

Examination/Limitation Remarks: **EXAMINED FROM SAFE-END SIDE.** Sal 4-20-00

* Combined Code Coverage from all Scans Sal 4-20-00

Total Length of Weld	Crown Width	Total Length of Weld Examined	Extent of Perpendicular Scans (W)	Extent of Parallel Scans (L)
106.5	2.2	5 (L) NA 2 (L) NA 7 & 8 (W) NL	5 - from NA to NA 2 - from NA to NA	From (5) .9" to (2) NL

Primary Examiner	Level	Assistant Examiner	Level	Non-Technical Review	Date
JOHN W. BELL John W Bell	II	GEORGE A. MORINI	II	Terry Stys	4-19-00

SNC NDE Level II/III Review		Date	Percentage of Code Coverage	ANII Review	Date
Darryl Lifter	III	4-20-00	*73.8 %	CGhamed	4/22/00

Figure 1

Revision 7

SHARED

FARLEY NUCLEAR PLANT
Ultrasonic Calibration and Examination Record

FNP-0-NDE-100.41
Southern Nuclear Operating Company

Unit	Sketch/Component No.	Date	Sheet No.	
1	ALA1-4300-4R	4/19/00	S00F1U250	Page 1 of 1

Procedure/Rev./TCN	Couplant/Batch No.	Thermometer SN/Cal Due Date	Linearity Sheet No.
FNP-0-NDE-100.41 / 2 / 2A	Ultragel II / 00125	38193 / 8/27/2000	S00F1L001

Instrument		Search Unit		Calibration Block	
Instrument	STAVELEY	Transducer Mfg.	KBA	Cal. Blk. No.	ALA-52
Serial No.	136-896K	Serial No.	H12393/H12394	Thickness	3.5"
	Ax. dB / Circ. dB	Size	2 (1.0")	Cal. Temp.	70
Ref.	NA / 70.4	Frequency/Mode	1.0 / L	Cal. In	1145
Scan	NA / 76.4	"A" Dimension	.82"	Cal. Chk.	N/A
Reject	OFF	Nominal Angle	45	Cal. Out	1505
Frequency	1.0 MHZ	Measured Angle	45	Ref. Blk. No.	NA
Mode	DUAL	Cable Type	RG 174	Reflector	NA
Damping	500 Ohms	Cable Length	15"	Amplitude/Sweep	NA

Axial Scan Calibration				Circ. Scan Calibration			
Cal. Refl.	Signal Amp.	Sweep Div.	Wmax	Cal. Refl.	Signal Amp.	Sweep Div.	Wmax
NA	NA	NA	NA	1/4	40	1.5	.75
NA	NA	NA	NA	1/2	80	3.0	1.8
NA	NA	NA	NA	3/4	65	4.5	2.9
NA	NA	NA	NA	ID	20	6.2	3.9
NA	NA	NA	NA				

Calibration Remarks:
NO ADDITIONAL DB NEEDED TO RAISE ID NOTCH TO DAC. 18° TILT WEDGE USED FOR EXIMINATION, CALIBRATED WITH NORMAL WEDGES.

Comp. Temp.: 77 °F Configuration: ELBOW TO SAFE-END Wo Location V-STAMP Lo Location TDC

Scan Dir.	Results NI	NRI	RI	Ind. No.	% DAC	Length L1	Lmax	L2	Reference Measurement W1	Wmax	W2	Sweep Position S1	Smax	S2	Thickness 1"<--	C/L	-->1"	Notes:
8		●		NA														

Examination/Limitation Remarks:

EXAMINED FORM SAFE-END SIDE.

* Combined Code Coverage from all scans Hal 4-20-00

Total Length of Weld	Crown Width	Total Length of Weld Examined	Extent of Perpendicular Scans (W)	Extent of Parallel Scans (L)
106.5	2.2	5 (L) NA 2 (L) NA 7 & 8 (W) NL	5 - from NA to NA 2 - from NA to NA	From (5) .9" to (2) NL

Primary Examiner	Level	Assistant Examiner	Level	Non-Technical Review	Date
JOHN W. BELL John W Bell	II	GEORGE A. MORINI	II	Terry Steyer	4-19-00
SNC NDE Level II/III Review		Date	Percentage of Code Coverage	ANII Review	Date
Hamil. Lytle	III	4-20-00	* 73.8 %	C Gwaltney	4/22/00

Figure 1

Revision 7

SHARED

FARLEY NUCLEAR PLANT
Ultrasonic Calibration and Examination Record

FNP-0-NDE-100.41
Southern Nuclear Operating Company

Unit	Sketch/Component No.	Date	Sheet No.	Page / of
1	ALA1-4300-4R	4/19/00	S00F1U251	1 / 1

Procedure/Rev./TCN	Couplant/Batch No.	Thermometer SN/Cal Due Date	Linearity Sheet No.
FNP-0-NDE-100.41 / 2 / 2A	Ultragel II / 00125	38193 / 8/27/2000	S00F1L001

Instrument			Search Unit		Calibration Block	
Instrument	STAVELEY		Transducer Mfg.	N/A	Cal. Blk. No.	ALA/APR-33
Serial No.	136-896K		Serial No.	008NXR/008NXV	Thickness	2.45"
	Ax. dB	Circ. dB	Size	2 (1.0")	Cal. Temp.	80
Ref.	NA	71.2	Frequency/Mode	1.0 / L	Cal. In	1228
Scan	NA	77.2	"A" Dimension	.82"	Cal. Chk.	N/A
Reject	OFF		Nominal Angle	45	Cal. Out	1433
Frequency	1.0 MHZ		Measured Angle	45	Ref. Blk. No.	NA
Mode	DUAL		Cable Type	RG 174	Reflector	NA
Damping	500 Ohms		Cable Length	15"	Amplitude/Sweep	NA

Axial Scan Calibration				Circ. Scan Calibration			
Cal. Refl.	Signal Amp.	Sweep Div.	Wmax	Cal. Refl.	Signal Amp.	Sweep Div.	Wmax
NA	NA	NA	NA	1/4	30	1.5	.65
NA	NA	NA	NA	1/2	80	3.0	1.3
NA	NA	NA	NA	3/4	50	4.5	1.9
NA	NA	NA	NA	ID	35	5.8	2.65
NA	NA	NA	NA				

Calibration Remarks:
NO ADDITIONAL dB NEEDED TO RAISE NOTCH TO DAC.

Comp. Temp.: 77 °F Configuration: ELBOW TO SAFE-END

Wo Location V-STAMP Lo Location TDC

Scan Dir.	Results NI	NRI	RI	Ind. No.	% DAC	Length L1	Lmax	L2	Reference Measurement W1	Wmax	W2	Sweep Position S1	Smax	S2	Thickness 1"<--	C/L	-->1"	Notes:
7/8		●		NA														

Examination/Limitation Remarks:

EXAMINED FROM ELBOW SIDE.

* Combined Code Coverage from all Scans Del 4-20-00

Total Length of Weld	Crown Width	Total Length of Weld Examined	Extent of Perpendicular Scans (W)	Extent of Parallel Scans (L)
106.5	2.2	5 (L) NA 2 (L) NA 7 & 8 (W) NL	5 - from NA to NA 2 - from NA to NA	From (5) NL to (2) .2"

Primary Examiner	Level	Assistant Examiner	Level	Non-Technical Review	Date
JOHN W. BELL John W Bell	II	GEORGE A. MORINI	II	Terry Styer	4-19-00

SNC NDE Level II/III Review		Date	Percentage of Code Coverage	ANII Review	Date
Harry R. Lightsey	III	4-20-00	* 73.8 %	C Gharmed	4/22/00

Figure 1

Revision 7

SHARED

FARLEY NUCLEAR PLANT
Ultrasonic Calibration and Examination Record

FNP-0-NDE-100.41
Southern Nuclear Operating Company

Unit	Sketch/Component No.	Date	Sheet No.	Page / of
1	ALA1-4300-4R	4/19/00	S00F1U252	1 / 2

Procedure/Rev./TCN	Couplant/Batch No.	Thermometer SN/Cal Due Date	Linearity Sheet No.
FNP-0-NDE-100.41 / 2 / 2A	Ultragel II / 00125	38193 / 8/27/2000	S00F1L001

Instrument		Search Unit		Calibration Block	
Instrument	STAVELEY	Transducer Mfg.	KBA	Cal. Blk. No.	ALA-52
Serial No.	136-896K	Serial No.	008NXT/008NXW	Thickness	3.5"
	Ax. dB / Circ. dB	Size	2 (1.0")	Cal. Temp.	70
Ref.	66 / NA	Frequency/Mode	1.0 / L	Cal. In	1115
Scan	72 / NA	"A" Dimension	.82"	Cal. Chk.	N/A
Reject	OFF	Nominal Angle	53	Cal. Out	1450
Frequency	1.0 MHZ	Measured Angle	53	Ref. Blk. No.	NA
Mode	DUAL	Cable Type	RG 174	Reflector	NA
Damping	500 Ohms	Cable Length	15"	Amplitude/Sweep	NA

Axial Scan Calibration				Circ. Scan Calibration			
Cal. Refl.	Signal Amp.	Sweep Div.	Wmax	Cal. Refl.	Signal Amp.	Sweep Div.	Wmax
1/4	80	1.5	1.2	NA	NA	NA	NA
1/2	70	3.0	1.95	NA	NA	NA	NA
3/4	40	4.5	2.95	NA	NA	NA	NA
ID	15	6.0	4.2	NA	NA	NA	NA
				NA	NA	NA	NA

Calibration Remarks:
NO ADDITIONAL dB NEEDED TO RAISE NOTCH TO DAC.

Comp. Temp.: °F Configuration: ELBOW TO SAFE-END

Wo Location V-STAMP Lo Location TDC

Scan Dir.	Results NI	NRI	RI	Ind. No.	% DAC	Length L1	Lmax	L2	Reference Measurement W1	Wmax	W2	Sweep Position S1	Smax	S2	Thickness 1"<--	C/L	-->1"	Notes:
2		●		NA														

Examination/Limitation Remarks:

EXAMINED FROM SAFE-END SIDE.

*Combined Code Coverage from all scans Hal 4-20-00

Total Length of Weld	Crown Width	Total Length of Weld Examined	Extent of Perpendicular Scans (W)	Extent of Parallel Scans (L)
106.5	2.2	5 (L) NA 2 (L) NA 7 & 8 (W) NA	5 - from NA to NA 2 - from NL to .6"	From (5) NA to (2) NA

Primary Examiner	Level	Assistant Examiner	Level	Non-Technical Review	Date
JOHN W. BELL John W Bell	II	GEORGE A. MORINI	II	Terry Styen	4-19-00
SNC NDE Level II/III Review		Date	Percentage of Code Coverage	ANII Review	Date
Harry L. Loftus	III	4-20-00	*73.8 %	CGuard	4/22/00

Figure 1

Revision 7

April 19, 2000
ASME Code Coverage for Steam Generator Hot Leg /Cold Leg

The following list is the numeric values assigned based on the OD profile and contour taken from A Loop. One dimension is provided which includes the new narrow groove weld and a portion of the old existing weld. The drawing to be used has a thickness of 3.3". The inner 1/3t dimension to be used will be 1.1". The width is based on the toe of the ID weld from the safe end side to the toe of the old existing OD weld, which measures 2.1".

AXIAL SCANS
Code requires .25" on each side of the above described weld toes.
Code coverage = 2.6" (width) x 1.1" (height) = 2.86 sq. "
Scan from elbow side: no limitations, 2.86sq "/ 2.86 sq. " = 100%
Scan from safe end side: limited due to taper / apex, two areas,
Box 1.35" x 1.1" = 1.485 sq. "
Triangle ½ x b x h = .5x.75"x1.1"= .413 sq. "
Total = 1.898 sq. " / 2.86 sq. " = 66.3%

CIRC. SCANS
Code requires .5" on each side of the above described weld toes.
Code coverage = 3.1" (width) x 1.1" (height) = 3.41 sq. "
Scan from safe end CW direction: .35" (width) x 1.1" (height) = .38 sq. "
Scan from elbow side CW direction: 1.65 " (width) x 1.1" (height) = 1.815 sq. "
Total = 2.2 sq. " / 3.41 sq. " = 64.5%

Scan from safe end CCW direction: .35" (width) x 1.1" (height) = .38 sq. "
Scan from elbow side CCW direction: 1.65 " (width) x 1.1" (height) = 1.815 sq. "
Total = 2.2 sq. " / 3.41 sq. " = 64.5%

Total ASME Code Coverage for the Weld is 73.8%. This is based on adding all four required scans, 100% + 66.3% + 64.5% + 64.5% = 295.3%
295.3/4 = 73.8%

NOTE: The coverage for the CW / CCW scans was not based on the centerline of the two transducers, but the centerline of one of the dual elements. ASME Section XI, Appendix III-2410(a) requires a 50% overlap between scans. Smaller transducers were tried to obtain maximum code coverage. Due to the metallurgical grain structure of the materials, a dual, 1.0 MHz, 1" diameter, transducer with curved shoes was used. On the safe end, wedges with an 18-degree tilt were used for the CW/CCW scans. The maximum area that could be scanned was examined. Supplement 4, (a) (1) of ASME Section XI requires a 35-degree or greater for the beam angle at the ID surface when using refracted Longitudinal waves. Only one direction coverage of the axial scan on the elbow side was obtained. RL waves are used with a 4/8-node calibration. Shear waves to provide a 6/8 vee-path is not practical for the cast stainless steel examination on the elbow. Thus we were limited to 66.3% from this direction.

Ultrasonic Thickness and Contour Examination Record

Southern Nuclear Operating Company

Unit	Weld Number	Sheet No.	Date
1	ALA1-4300-4R	S00F1U255	4/19/2000

O/Drawing Number	Couplant/Batch Number	Instrument Manufacturer
ALA1-4300	ULTRAGEL II / 00125	STAVELEY

Material Type	Calibration Standard/ Serial No.	Model Number	Serial Number
☐ C/S ☒ S/S Other	SS IIW / 86-4245	SONIC 136	136-898K

Examiner	SNT Level	Transducer Manufacturer	Type	Size
JOHN W. BELL John W Bell	II	KBA	~~N/A~~ 4	.75

Examiner	SNT Level	Serial Number	Frequency
GEORGE A. MORINI	II	B25613	1.0 MHz

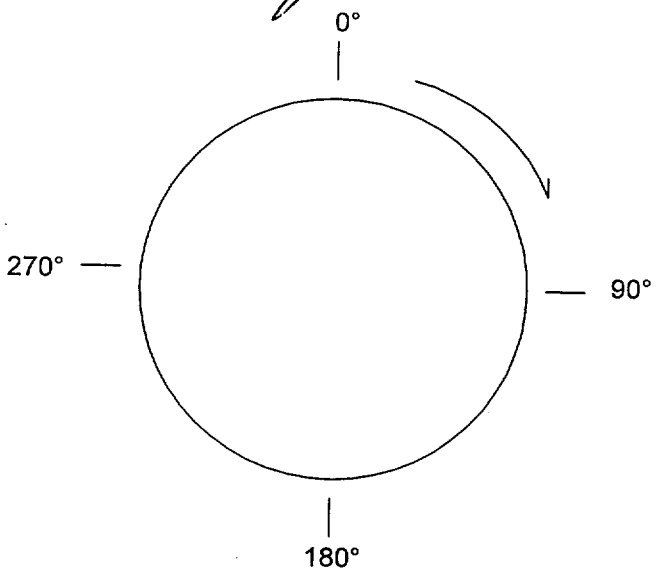

Location	0°	90 °	180°	270°
A	3.1	2.8	3.2	3.3
B	3.0	2.9	3.0	3.1
C	3.0	3.0	3.0	3.0
D	3.2	3.3	3.3	3.3
E	4.0	4.0	4.0	4.0

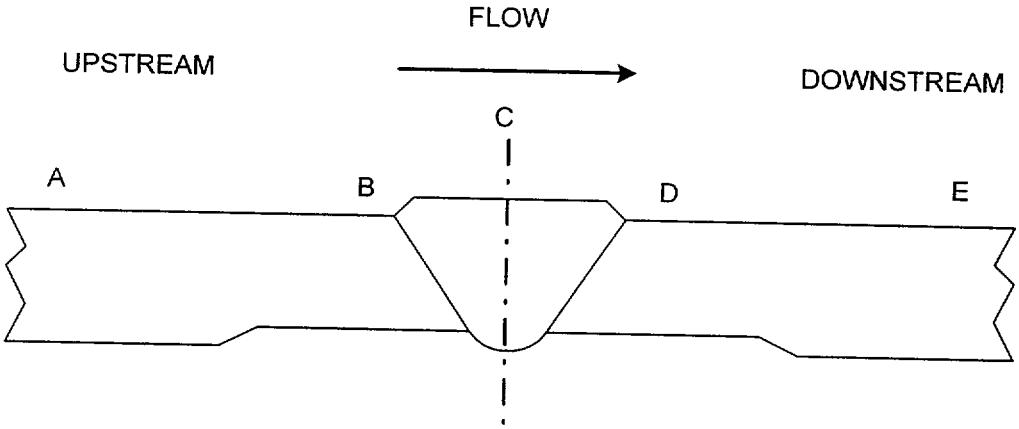

COUNTERBORE

NA	NA
UPSTREAM	DOWNSTREAM

REMARKS:

E Level II/III Review	Level	Date	Non-Technical Review	Date
Gary A. Lofton	III	4-20-00	Terry Styer	4-19-00

C HOT LEG

SHEET No. S00FIU255

SAFE END

ELBOW

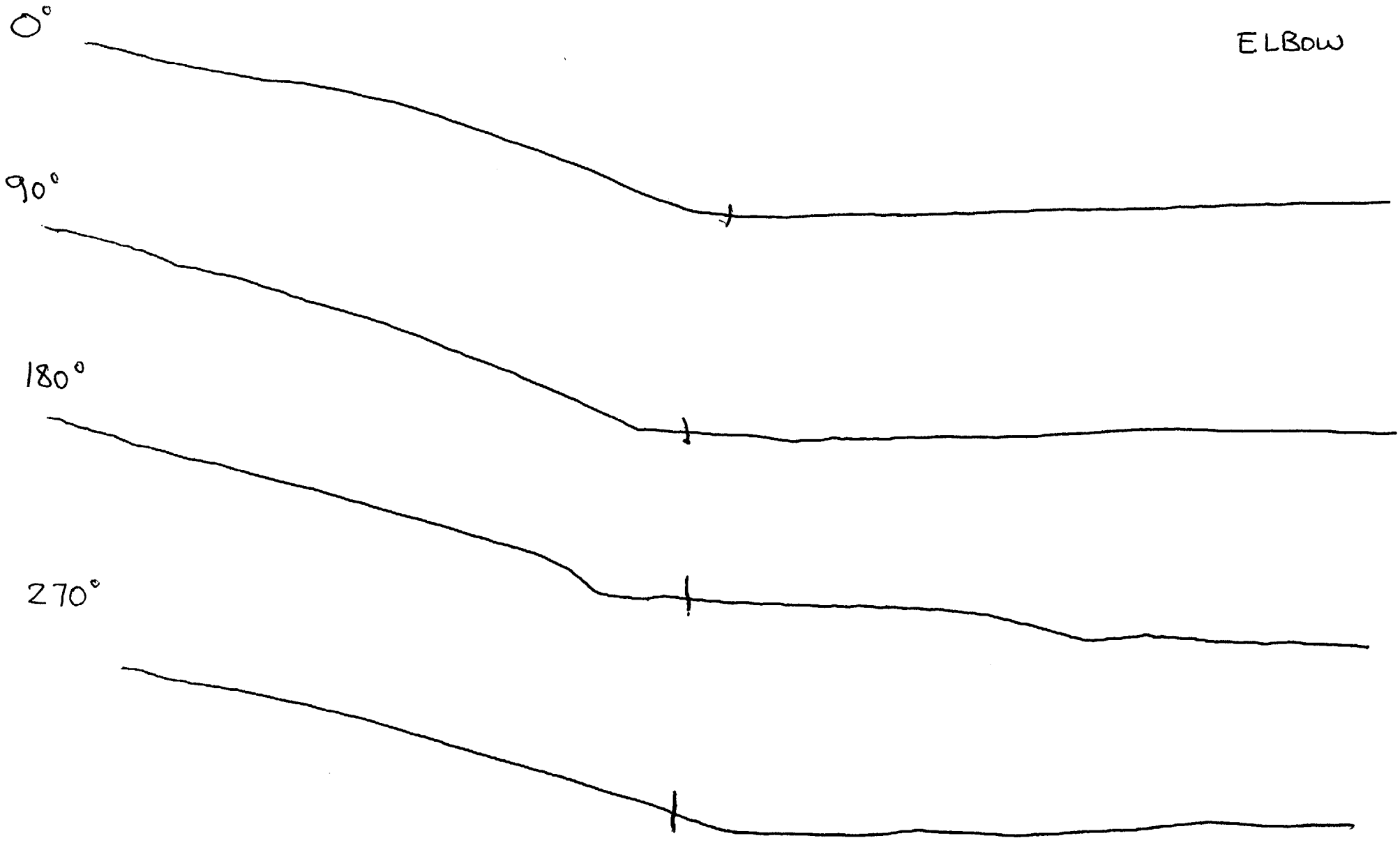

BECHTEL

WPIR #	NONDESTRUCTIVE EXAMINATION REPORT LIQUID PENETRANT EXAMINATION		REPORT #
P-RCC-060			PT-00-149
JOB # 23734	JOB NAME FARLEY UNIT 1 SGR	SURFACE CONDITION ☒ GROUND ☐ AS WELDED	DATE 4-17-00
ISO / DWG # FSK-M-146	ITEM / COMP ID FW2-SG	TIME OF EXAM ☒ N/A ☐ PRE-PWHT ☐ POST-PWHT	COMPONENT TEMP 79°
CODE / WELD CLASS ASME XI CL I	COMPONENT CONFIGURATION COLD LEG / SAFE-END TO EL	MATL TYPE ☐ C/S ☒ S/S ☐ DISSIM METAL	PROCEDURE & REVISION PT (SR)-ASME III / XI REV. 2

	CLEANER/REMOVER	PENETRANT	DEVELOPER
MFR	MAGNAFLUX	MAGNAFLUX	MAGNAFLUX
TYPE	SKC-S	SKL-SP	SKD-S2
BATCH #	99M01K	98J11K	99G09K

INDICATION CODE: NI=NO INDICATIONS NRI=NO RECORDABLE INDICATIONS C=CRACK
ROUND=ROUNDED INDICATION LINEAR=LINEAR INDICATION

PART OR WELD #	ACC (√)	REJ (√)	IND CODE	REMARKS
FW2-SG FINAL	X		NI	NONE

SKETCH / COMMENTS

AREA OF EXAMINATION PERFORMED IN ACCORDANCE WITH ATTACHED SNC DRAWING. AREA EXAMINED INCLUDED FW2-SG AND 3.0" INTO ELBOW FROM NOZZLE SIDE OF EXAMINATION AREA.

STEAM GENERATOR 1C

FNP ISI # ALA1-4300-5R

M&TE NO. 198060

CAL. DUE DATE: 7-26-00

EXAMINER	LEVEL	DATE
Carl L. Williams	II	4-17-00
REVIEW		**DATE**
[illegible]	III	4-20-00

Gary A. Lothes SVC Level III 4-20-00 ANII REVIEW: CG Ward 4/22/00

Steam Generator

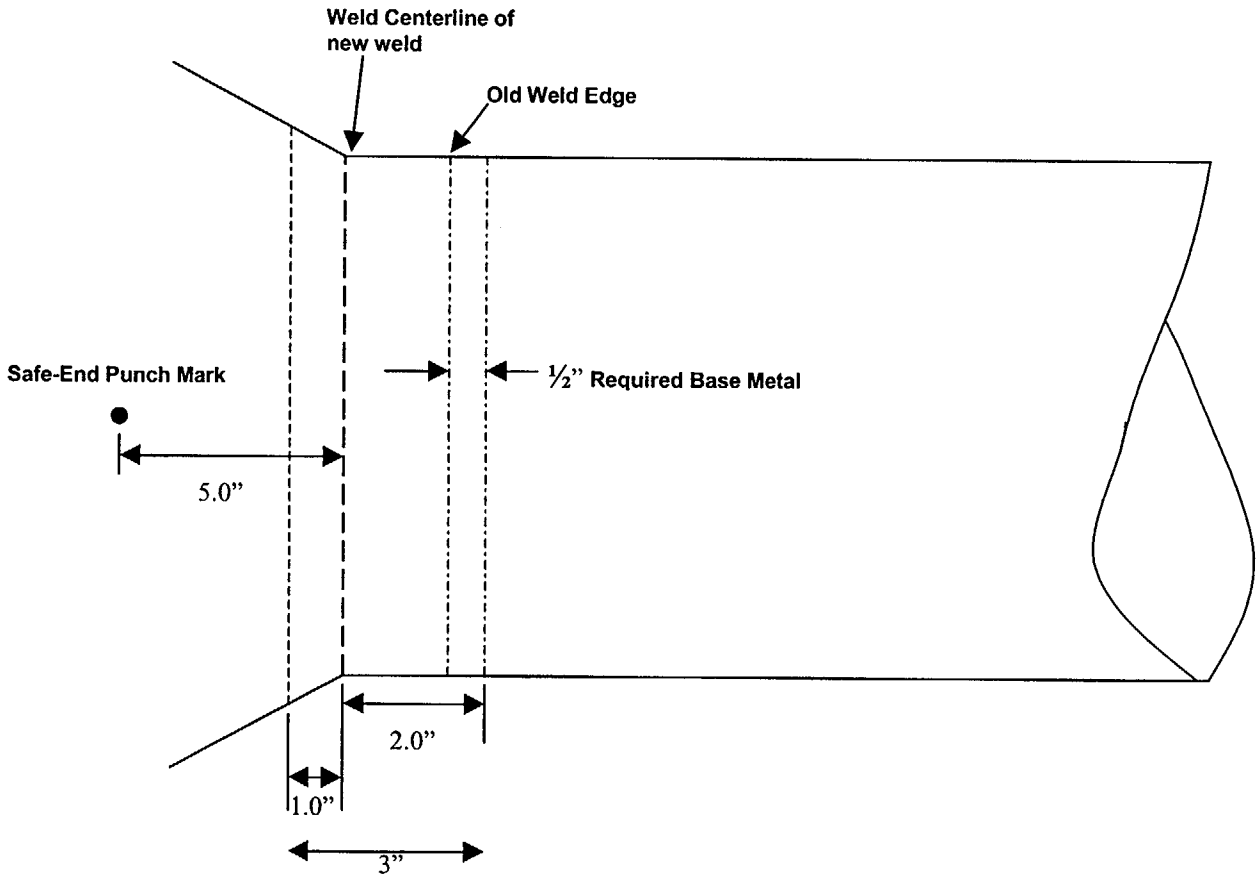

PT Examination of 3" Width will cover all LEGS.

SHARED

FARLEY NUCLEAR PLANT
Ultrasonic Calibration and Examination Record

FNP-0-NDE-100.41
Southern Nuclear Operating Company

Unit	Sketch/Component No.	Date	Sheet No.	
1	ALA1-4300-5R	4/19/00	S00F1U256	Page 1 of 3

Procedure/Rev./TCN	Couplant/Batch No.	Thermometer SN/Cal Due Date	Linearity Sheet No.
FNP-0-NDE-100.41 / 2 / 2A	Ultragel II / 00125	38193 / 8/27/2000	S00F1L001

Instrument			Search Unit		Calibration Block	
Instrument	STAVELEY		Transducer Mfg.	KBA	Cal. Blk. No.	ALA/APR-33
Serial No.	136-896K		Serial No.	D20267/D20268	Thickness	2.45"
	Ax. dB	Circ. dB	Size	2 (1.0")	Cal. Temp.	80
Ref.	58	NA	Frequency/Mode	1.0 / L	Cal. In	1225
Scan	64	NA	"A" Dimension	.82"	Cal. Chk.	N/A
Reject	OFF		Nominal Angle	45	Cal. Out	1430
Frequency	1.0 MHZ		Measured Angle	45	Ref. Blk. No.	NA
Mode	DUAL		Cable Type	RG 174	Reflector	NA
Damping	500 Ohms		Cable Length	15"	Amplitude/Sweep	NA

Axial Scan Calibration				Circ. Scan Calibration			
Cal. Refl.	Signal Amp.	Sweep Div.	Wmax	Cal. Refl.	Signal Amp.	Sweep Div.	Wmax
1/4	30	1.5	.62	NA	NA	NA	NA
1/2	80	3.0	1.2	NA	NA	NA	NA
3/4	45	4.5	1.85	NA	NA	NA	NA
ID	25	6.1	2.5	NA	NA	NA	NA
				NA	NA	NA	NA

Calibration Remarks:
NO ADDITIONAL DB NEEDED TO RAISE ID NOTCH TO DAC.

Comp. Temp.: 77 °F Configuration: SAFE-END TO NOZZLE Wo Location V-STAMP Lo Location TDC

Scan Dir.	Results NI	NRI	RI	Ind. No.	% DAC	Length L1	Lmax	L2	Reference Measurement W1	Wmax	W2	Sweep Position S1	Smax	S2	Thickness 1"<--	C/L	-->1"	Notes:
2		●		N/A														

Examination/Limitation Remarks:

EXAMINED FROM ELBOW SIDE.

* Combined Code Coverage from all scans Ad 4-20-00

Total Length of Weld	Crown Width	Total Length of Weld Examined	Extent of Perpendicular Scans (W)	Extent of Parallel Scans (L)
106.5	2.2	5 (L) NA 2 (L) NL 7 & 8 (W) NA	5 - from NA to NA 2 - from NL to .9"	From (5) NA to (2) NA

Primary Examiner	Level	Assistant Examiner	Level	Non-Technical Review	Date
JOHN W. BELL John W Bell	II	GEORGE A. MORINI	II	Terry Styen	4-19-00

SNC NDE Level II/III Review		Date	Percentage of Code Coverage	ANII Review	Date
Donald Sutton	III	4-20-00	* 73.8 %	CGhamd	4/22/00

Figure 1

Revision 7

WELD NO. ALA1-43005R

SHEET No. 500 F14256

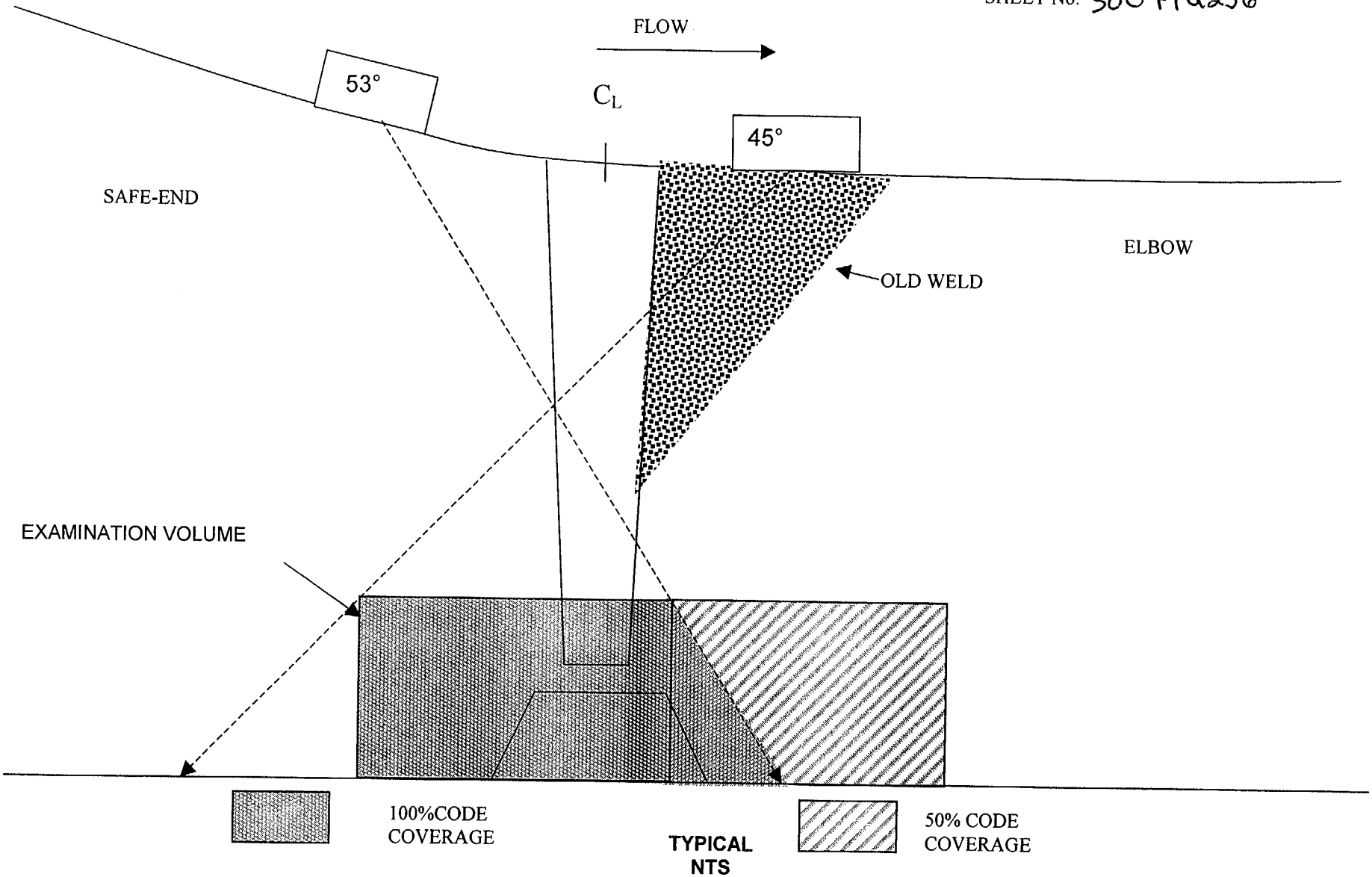

AX CODE COVERAGE PLOT
AX. CODE COVERAGE OBAINED =83.2%
CIRC CODE COVERAGE OBAINED =64.5%
TOTAL CODE COVERAGE OBAINED =73.8%
SEE PAGE 3 OF 3 FOR CIRC CODE COVERAGE PLOT

WELD NO. ALA1-43005R

SHEET No. 5 00 F14256

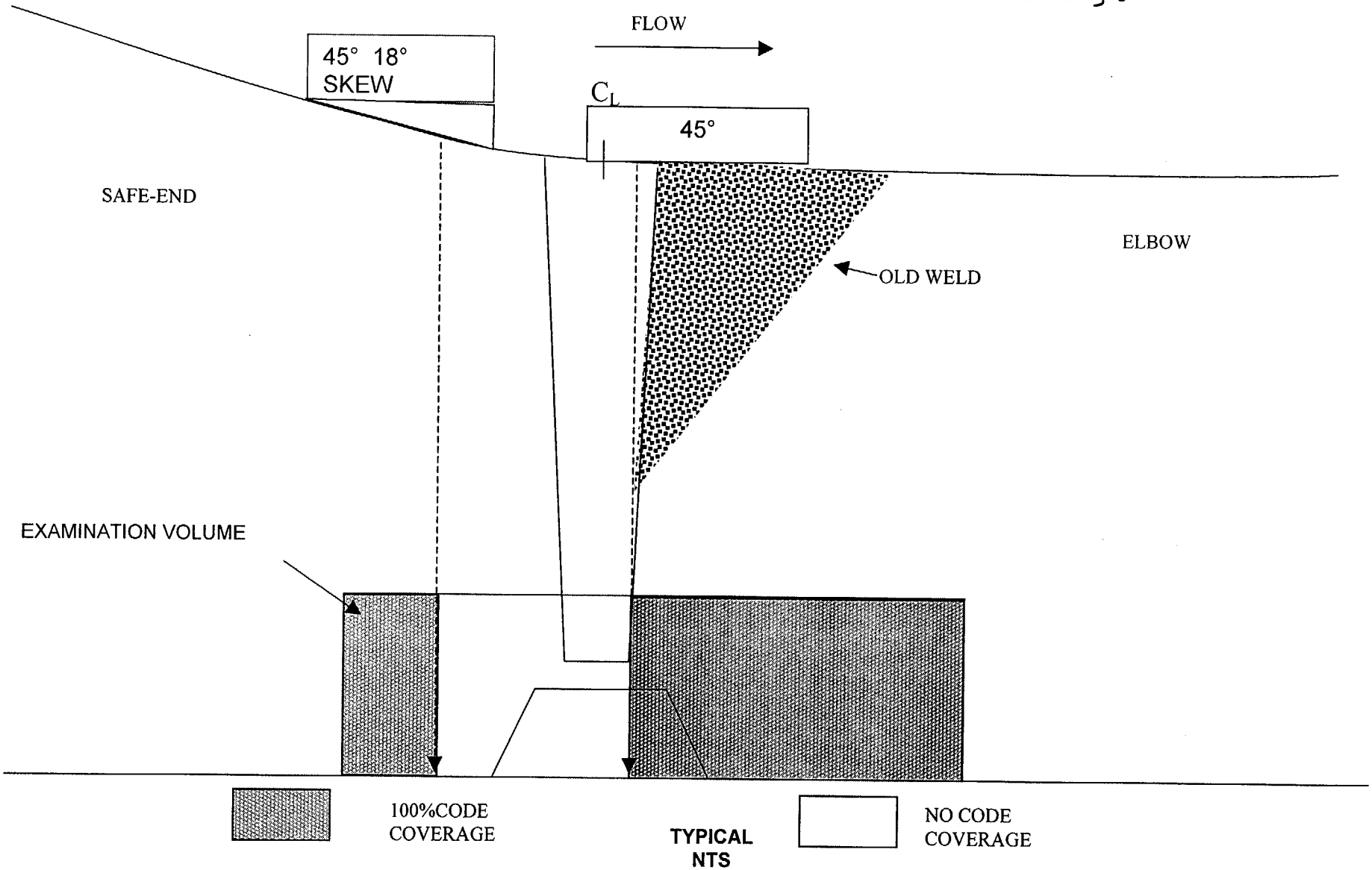

CIRC CODE COVERAGE PLOT
CIRC CODE COVERAGE OBAINED =64.5%
AX. CODE COVERAGE OBAINED =83.2%
TOTAL CODE COVERAGE OBAINED =73.8%
SEE PAGE 3 OF 3 FOR CIRC CODE COVERAGE PLOT

SHARED

FARLEY NUCLEAR PLANT
Ultrasonic Calibration and Examination Record

FNP-0-NDE-100.41
Southern Nuclear Operating Company

Unit	Sketch/Component No.	Date	Sheet No.	
1	ALA1-4300-5R	4/19/00	S00F1U257	Page 1 of 2

Procedure/Rev./TCN	Couplant/Batch No.	Thermometer SN/Cal Due Date	Linearity Sheet No.
FNP-0-NDE-100.41 / 2 / 2A	Ultragel II / 00125	38193 / 8/27/2000	S00F1L001

Instrument		Search Unit		Calibration Block	
Instrument	STAVELEY	Transducer Mfg.	KBA	Cal. Blk. No.	ALA-52
Serial No.	136-896K	Serial No.	008NXT/008NXW	Thickness	3.5"
	Ax. dB / Circ. dB	Size	2 (1.0")	Cal. Temp.	70
Ref.	66 / NA	Frequency/Mode	1.0 / L	Cal. In	1115
Scan	72 / NA	"A" Dimension	.82"	Cal. Chk.	N/A
Reject	OFF	Nominal Angle	53	Cal. Out	1450
Frequency	1.0 MHZ	Measured Angle	53	Ref. Blk. No.	NA
Mode	DUAL	Cable Type	RG 174	Reflector	NA
Damping	500 Ohms	Cable Length	15"	Amplitude/Sweep	NA

Axial Scan Calibration				Circ. Scan Calibration			
Cal. Refl.	Signal Amp.	Sweep Div.	Wmax	Cal. Refl.	Signal Amp.	Sweep Div.	Wmax
1/4	80	1.5	1.2	NA	NA	NA	NA
1/2	70	3.0	1.95	NA	NA	NA	NA
3/4	40	4.5	2.95	NA	NA	NA	NA
ID	15	6.0	4.2	NA	NA	NA	NA
				NA	NA	NA	NA

Calibration Remarks:
NO ADDITIONAL dB NEEDED TO RAISE NOTCH TO DAC.

Comp. Temp.: 77 °F Configuration: SAFE-END TO NOZZLE

Wo Location V-STAMP Lo Location TDC

Scan Dir.	Results NI	NRI	RI	Ind. No.	% DAC	Length L1	Lmax	L2	Reference Measurement W1	Wmax	W2	Sweep Position S1	Smax	S2	Thickness 1"<--	C/L	-->1"	Notes:
5		●		NA														

Examination/Limitation Remarks:

EXAMINED FROM SAFE-END SIDE.

* Combined Code Coverage from all scans DAL 4-20-00

Total Length of Weld	Crown Width	Total Length of Weld Examined	Extent of Perpendicular Scans (W)	Extent of Parallel Scans (L)
106.5	2.2	5 (L) NL 2 (L) NA 7 & 8 (W) NA	5 - from NL to .9" 2 - from NA to NA	From (5) NA to (2) NA

Primary Examiner	Level	Assistant Examiner	Level	Non-Technical Review	Date
JOHN W. BELL John W Bell	II	GEORGE A. MORINI	II	Terry Stryer	4-19-00
SNC NDE Level II/III Review		Date	Percentage of Code Coverage	ANII Review	Date
Joseph Hefner	III	4-20-00	* 73.8 %	CG Wood	4/22/00

Figure 1

Revision 7

April 19, 2000
ASME Code Coverage for Steam Generator Hot Leg /Cold Leg

The following list is the numeric values assigned based on the OD profile and contour taken from A Loop. One dimension is provided which includes the new narrow groove weld and a portion of the old existing weld. The drawing to be used has a thickness of 3.3". The inner 1/3t dimension to be used will be 1.1". The width is based on the toe of the ID weld from the safe end side to the toe of the old existing OD weld, which measures 2.1".

AXIAL SCANS
Code requires .25" on each side of the above described weld toes.
Code coverage = 2.6" (width) x 1.1" (height) = 2.86 sq. "
Scan from elbow side: no limitations, 2.86sq "/ 2.86 sq. " = 100%
Scan from safe end side: limited due to taper / apex, two areas,
Box 1.35" x 1.1" = 1.485 sq. "
Triangle ½ x b x h = .5x.75"x1.1"= .413 sq. "
Total = 1.898 sq. " / 2.86 sq. " = 66.3%

CIRC. SCANS
Code requires .5" on each side of the above described weld toes.
Code coverage = 3.1" (width) x 1.1" (height) = 3.41 sq. "
Scan from safe end CW direction: .35" (width) x 1.1" (height) = .38 sq. "
Scan from elbow side CW direction: 1.65 " (width) x 1.1" (height) = 1.815 sq. "
Total = 2.2 sq. " / 3.41 sq. " = 64.5%

Scan from safe end CCW direction: .35" (width) x 1.1" (height) = .38 sq. "
Scan from elbow side CCW direction: 1.65 " (width) x 1.1" (height) = 1.815 sq. "
Total = 2.2 sq. " / 3.41 sq. " = 64.5%

Total ASME Code Coverage for the Weld is 73.8%. This is based on adding all four required scans, 100% + 66.3% + 64.5% + 64.5% = 295.3%
295.3/4 = 73.8%

NOTE: The coverage for the CW / CCW scans was not based on the centerline of the two transducers, but the centerline of one of the dual elements. ASME Section XI, Appendix III-2410(a) requires a 50% overlap between scans. Smaller transducers were tried to obtain maximum code coverage. Due to the metallurgical grain structure of the materials, a dual, 1.0 MHz, 1" diameter, transducer with curved shoes was used. On the safe end, wedges with an 18-degree tilt were used for the CW/CCW scans. The maximum area that could be scanned was examined. Supplement 4, (a) (1) of ASME Section XI requires a 35-degree or greater for the beam angle at the ID surface when using refracted Longitudinal waves. Only one direction coverage of the axial scan on the elbow side was obtained. RL waves are used with a 4/8-node calibration. Shear waves to provide a 6/8 vee-path is not practical for the cast stainless steel examination on the elbow. Thus we were limited to 66.3% from this direction.

SHARED

FARLEY NUCLEAR PLANT
Ultrasonic Calibration and Examination Record

FNP-0-NDE-100.41
Southern Nuclear Operating Company

Unit	Sketch/Component No.	Date	Sheet No.	
1	ALA1-4300-5R	4/19/00	S00F1U258	Page 1 of 1

Procedure/Rev./TCN	Couplant/Batch No.	Thermometer SN/Cal Due Date	Linearity Sheet No.
FNP-0-NDE-100.41 / 2 / 2A	Ultragel II / 00125	38193 / 8/27/2000	S00F1L001

Instrument		Search Unit		Calibration Block	
Instrument	STAVELEY	Transducer Mfg.	KBA	Cal. Blk. No.	ALA/APR-33
Serial No.	136-896K	Serial No.	008NXR/008NXV	Thickness	2.45"
	Ax. dB / Circ. dB	Size	2 (1.0")	Cal. Temp.	80
Ref.	NA / 71.2	Frequency/Mode	1.0 / L	Cal. In	1228
Scan	NA / 77.2	"A" Dimension	.82"	Cal. Chk.	N/A
Reject	OFF	Nominal Angle	45	Cal. Out	1433
Frequency	1.0 MHZ	Measured Angle	45	Ref. Blk. No.	NA
Mode	DUAL	Cable Type	RG 174	Reflector	NA
Damping	500 Ohms	Cable Length	15"	Amplitude/Sweep	NA

Axial Scan Calibration				Circ. Scan Calibration			
Cal. Refl.	Signal Amp.	Sweep Div.	Wmax	Cal. Refl.	Signal Amp.	Sweep Div.	Wmax
NA	NA	NA	NA	1/4	30	1.5	.65
NA	NA	NA	NA	1/2	80	3.0	1.3
NA	NA	NA	NA	3/4	50	4.5	1.9
NA	NA	NA	NA	ID	35	5.8	2.65
NA	NA	NA	NA				

Calibration Remarks:
NO ADDITIONAL dB NEEDED TO RAISE NOTCH TO DAC.

Comp. Temp.: 77 °F Configuration: SAFE-END TO NOZZLE

Wo Location V-STAMP Lo Location TDC

Scan Dir.	Results NI	NRI	RI	Ind. No.	% DAC	Length L1	Lmax	L2	Reference Measurement W1	Wmax	W2	Sweep Position S1	Smax	S2	Thickness 1"<--	C/L	-->1"	Notes:
7/8		●		NA														

Examination/Limitation Remarks:

EXAMINED FROM ELBOW SIDE.

* Combined Code Coverage from all scans [illegible] 4-20-00

Total Length of Weld	Crown Width	Total Length of Weld Examined	Extent of Perpendicular Scans (W)	Extent of Parallel Scans (L)
106.5	2.2	5 (L) NA 2 (L) NA 7 & 8 (W) NA	5 - from NA to NA 2 - from NA to NA	From (5) .2" to (2) NL

Primary Examiner	Level	Assistant Examiner	Level	Non-Technical Review	Date
JOHN W. BELL [signature]	II	GEORGE A. MORINI [signature]	II	Terry Styer	4-19-00
SNC NDE Level II/III Review		Date	Percentage of Code Coverage	ANII Review	Date
[signature]	III	4-20-00	* 73.8 %	[signature]	4/22/00

Figure 1

Revision 7

SHARED

FARLEY NUCLEAR PLANT
Ultrasonic Calibration and Examination Record

FNP-0-NDE-100.41
Southern Nuclear Operating Company

Unit	Sketch/Component No.	Date	Sheet No.	Page / of /
1	ALA1-4300-5R	4/19/00	S00F1U260	

Procedure/Rev./TCN	Couplant/Batch No.	Thermometer SN/Cal Due Date	Linearity Sheet No.
FNP-0-NDE-100.41 / 2 / 2A	Ultragel II / 00125	38193 / 8/27/2000	S00F1L001

Instrument		Search Unit		Calibration Block	
Instrument	STAVELEY	Transducer Mfg.	KBA	Cal. Blk. No.	ALA-52
Serial No.	136-896K	Serial No.	G14510 / G14511	Thickness	3.5"
	Ax. dB / Circ. dB	Size	2 (1.0")	Cal. Temp.	70
Ref.	NA / 71.2	Frequency/Mode	1.0 / L	Cal. In	1130
Scan	NA / 77.2	"A" Dimension	.82"	Cal. Chk.	N/A
Reject	OFF	Nominal Angle	45	Cal. Out	1455
Frequency	1.0 MHZ	Measured Angle	45	Ref. Blk. No.	NA
Mode	DUAL	Cable Type	RG 174	Reflector	NA
Damping	500 Ohms	Cable Length	15"	Amplitude/Sweep	NA

Axial Scan Calibration				Circ. Scan Calibration			
Cal. Refl.	Signal Amp.	Sweep Div.	Wmax	Cal. Refl.	Signal Amp.	Sweep Div.	Wmax
NA	NA	NA	NA	1/4	40	1.5	.75
NA	NA	NA	NA	1/2	80	3.0	1.8
NA	NA	NA	NA	3/4	65	4.5	2.9
NA	NA	NA	NA	ID	25	6.2	3.9
NA	NA	NA	NA				

Calibration Remarks:
2.6 dB ADDED TO RAISE ID NOTCH TO DAC, (68.6 + 2.6 = 71.2). 18° TILT WEDGE USED FOR EXIMINATION, CALIBRATED WITH NORMAL WEDGES.

Comp. Temp.: 77 °F Configuration: SAFE-END TO NOZZLE

Wo Location V-STAMP Lo Location TDC

Scan Dir.	Results NI	NRI	RI	Ind. No.	% DAC	Length L1	Lmax	L2	Reference Measurement W1	Wmax	W2	Sweep Position S1	Smax	S2	Thickness 1"<--	C/L	-->1"	Notes:
8		●		NA														

Examination/Limitation Remarks:

EXAMINED FROM SAFE-END SIDE.

* Combined Code Coverage from all Scans [illegible] 4-20-00

Total Length of Weld	Crown Width	Total Length of Weld Examined	Extent of Perpendicular Scans (W)	Extent of Parallel Scans (L)
106.5	2.2	5 (L) NA 2 (L) NA 7 & 8 (W) NL	5 - from NA to NA 2 - from NA to NA	From (5) NL to (2) .5"

Primary Examiner	Level	Assistant Examiner	Level	Non-Technical Review	Date
JOHN W. BELL John W Bell	II	GEORGE A. MORINI [signature]	II	Terry Styen	4-19-00

SNC NDE Level II/III Review	Date	Percentage of Code Coverage	ANII Review	Date
[signature] III	4-20-00	*73.8 %	[signature]	4/22/00

Figure 1

Revision 7

SHARED

FARLEY NUCLEAR PLANT
Ultrasonic Calibration and Examination Record

FNP-0-NDE-100.41
Southern Nuclear Operating Company

Unit	Sketch/Component No.	Date	Sheet No.	Page / of /
1	ALA1-4300-5R	4/19/00	S00F1U259	

Procedure/Rev./TCN	Couplant/Batch No.	Thermometer SN/Cal Due Date	Linearity Sheet No.
FNP-0-NDE-100.41 / 2 / 2A	Ultragel II / 00125	38193 / 8/27/2000	S00F1L001

Instrument		Search Unit		Calibration Block	
Instrument	STAVELEY	Transducer Mfg.	KBA	Cal. Blk. No.	ALA-52
Serial No.	136-896K	Serial No.	H12393/H12394	Thickness	3.5"
	Ax. dB / Circ. dB	Size	2 (1.0")	Cal. Temp.	70
Ref.	NA / 70.4	Frequency/Mode	1.0 / L	Cal. In	1145
Scan	NA / 76.4	"A" Dimension	.82"	Cal. Chk.	N/A
Reject	OFF	Nominal Angle	45	Cal. Out	1505
Frequency	1.0 MHZ	Measured Angle	45	Ref. Blk. No.	NA
Mode	DUAL	Cable Type	RG 174	Reflector	NA
Damping	500 Ohms	Cable Length	15"	Amplitude/Sweep	NA

Axial Scan Calibration				Circ. Scan Calibration			
Cal. Refl.	Signal Amp.	Sweep Div.	Wmax	Cal. Refl.	Signal Amp.	Sweep Div.	Wmax
NA	NA	NA	NA	1/4	40	1.5	.75
NA	NA	NA	NA	1/2	80	3.0	1.8
NA	NA	NA	NA	3/4	65	4.5	2.9
NA	NA	NA	NA	ID	20	6.2	3.9
NA	NA	NA	NA				

Calibration Remarks:
NO ADDITIONAL DB NEEDED TO RAISE ID NOTCH TO DAC. 18° TILT WEDGE USED FOR EXIMINATION, CALIBRATED WITH NORMAL WEDGES.

Comp. Temp.: 77 °F Configuration: SAFE-END TO NOZZLE

Wo Location V-STAMP Lo Location TDC

Scan Dir.	Results NI	NRI	RI	Ind. No.	% DAC	Length L1	Lmax	L2	Reference Measurement W1	Wmax	W2	Sweep Position S1	Smax	S2	Thickness 1"<--	C/L	-->1"	Notes:
7		●		NA														

Examination/Limitation Remarks:

EXAMINED FROM SAFE-END SIDE.

* Combined Code Coverage from all scans Dal 4-20-00

Total Length of Weld	Crown Width	Total Length of Weld Examined	Extent of Perpendicular Scans (W)	Extent of Parallel Scans (L)
106.5	2.2	5 (L) NA 2 (L) NA 7 & 8 (W) NL	5 - from NA to NA 2 - from NA to NA	From (5) NL to (2) .5"

Primary Examiner	Level	Assistant Examiner	Level	Non-Technical Review	Date
JOHN W. BELL John W Bell	II	GEORGE A. MORINI	II	Terry Styron	4-19-00

SNC NDE Level II/III Review		Date	Percentage of Code Coverage	ANII Review	Date
	III	4-20-00	*73.8 %	CG Ward	4/22/00

Figure 1

Revision 7

Ultrasonic Thickness and Contour Examination Record

Southern Nuclear Operating Company

Unit	Weld Number	Sheet No.	Date
1	ALA1-4300-5R	S00F1U261	4/19/2000

ISO/Drawing Number	Couplant/Batch Number	Instrument Manufacturer
ALA1-4300	ULTRAGEL II / 00125	STAVELEY

Material Type	Calibration Standard/ Serial No.	Model Number	Serial Number
☐ C/S ☒ S/S Other	SS IIW / 86-4245	SONIC 136	136-896K

Examiner	SNT Level	Transducer Manufacturer	Type	Size
JOHN W. BELL John W Bell	II	KBA	0°	.75

Examiner	SNT Level	Serial Number	Frequency
GEORGE A. MORINI	II	B25613	1.0 MHz

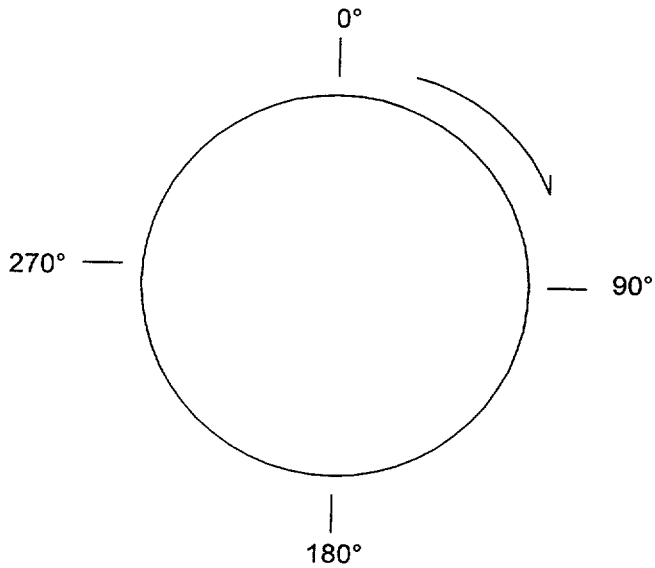

Location	0°	90 °	180°	270°
A	4.0	4.0	4.0	4.0
B	3.4	3.4	3.4	3.4
C	3.2	3.2	3.2	3.2
D	3.2	3.2	3.2	3.2
E	3.4	3.4	3.4	3.4

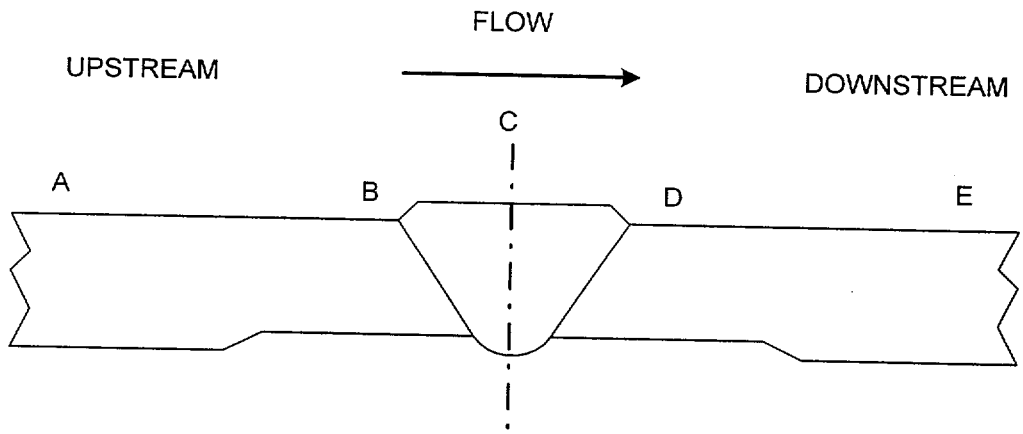

COUNTERBORE

NA	NA
UPSTREAM	DOWNSTREAM

REMARKS:

NDE Level II/III Review	Level	Date	Non-Technical Review	Date
Darryl Loftus	III	4-20-00	Terry Styer	4-15-00

Revision 1

C COLD LEG
SHEET No. 500F14261

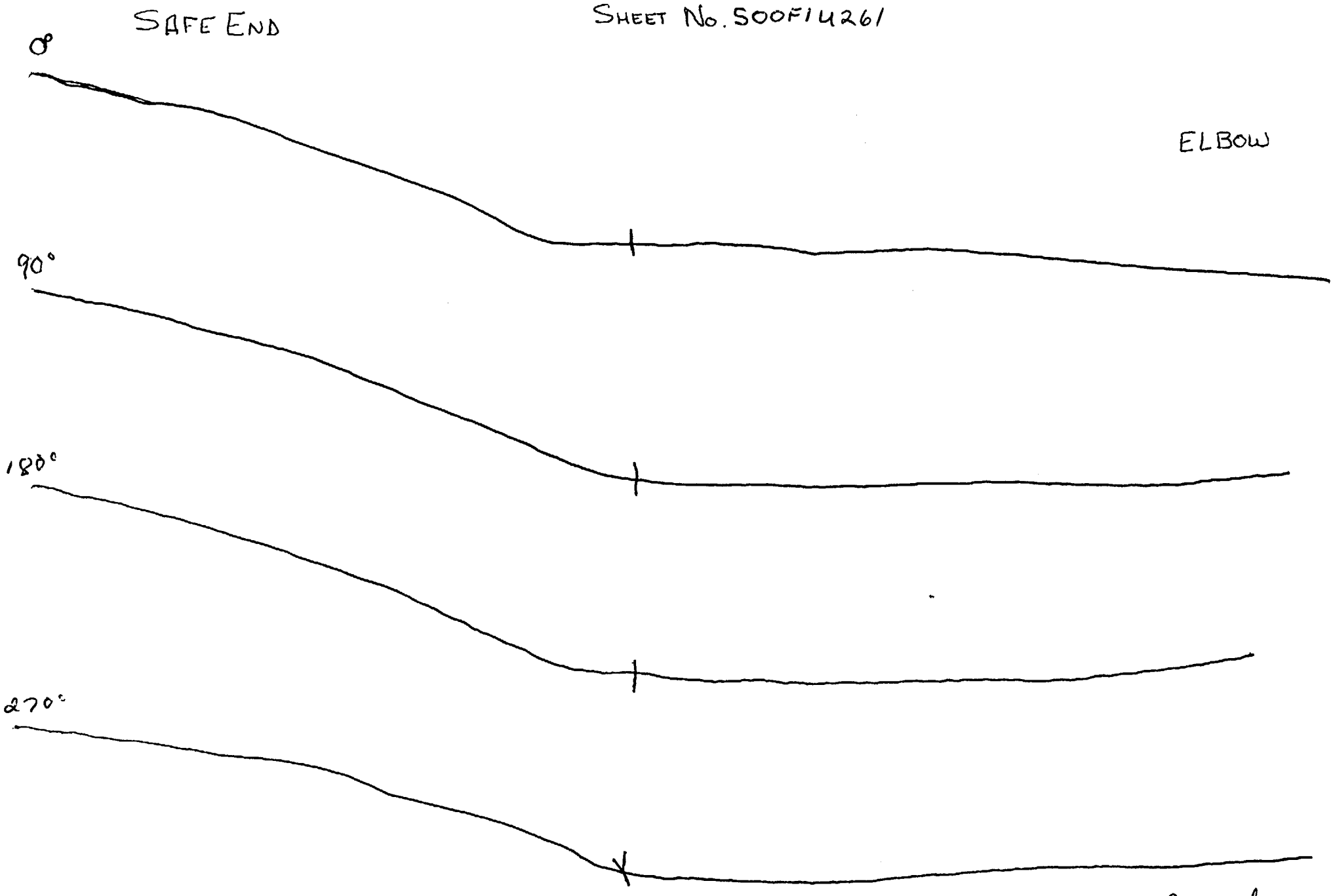

ALA
SUMMARY OF RECORDED INDICATIONS
2000 UNIT 1 RF-16

SKETCH	ID	ITEM DESCRIPTION	INDICATION DESCRIPTION	DISPOSITION ACCEPT	REPAIR	MONITOR	IER NUMBER
ALA2-4500	28	Tee-to-Pipe Weld Main Steam System	Geometry	X			001
ALA2-4101	12BC	Header-to-Branch Weld Main Steam System	Spot Indication	X			002
ALA2-4101	13BC	Header-to-Branch Weld Main Steam System	Spot Indication	X			003
ALA2-4101	14BC	Header-to-Branch Weld Main Steam System	Spot Indication	X			004
ALA2-3500	3	Hx Nozzle Reinforcement RHR System	Surface Indication	X			005
ALA2-4500	1	Cap-to-Tee Weld Main Steam System	Geometry	X			006
ALA2-4500	2	Cap-to-Tee Weld Main Steam System	Geometry	X			007
Various	N/A	Examination of Class 1 Bolted Connections	Evidence of Leakage and Boron Accumulation		X		008
ALA2-4101	2	Pipe-to-Elbow Main Steam System	Geometry	X			009
ALA2-4523	5	Elbow-to-Valve Safety Injection System	Rounded Indication	X			010
Various	N/A	Examination of Class 2 Bolted Connections	Evidence of Leakage and Boron Accumulation		X		011
ALA2-4500	2L1	Pipe Long Seam Main Steam System	Geometry	X			012
ALA1-4200	5R	Safe End-to-Elbow Reactor Coolant System	Geometry	X			013*
ALA2-4150	21R	Elbow-to-Reducer Main Feedwater System	Geometry	X			014*
ALA2-4150	22R	Nozzle-to-Reducer Main Feedwater System	Geometry/Slag Inclusion	X			015*
ALA2-4350	24R	Nozzle-to-Reducer Main Feedwater System	Geometry	X			016*
ALA2-4250	16R	Nozzle-to-Reducer Main Feedwater System	Geometry	X			017*
ALA1-4304	7	Valve-to-Pipe Safety Injection System	Scratches in Basemetal		X		4304-7**

*Steam Generator Replacement Preservice Examinations
**Examined per NRC IE Notice Response

FIGURE C-1

NDE INDICATION EVALUATION REPORT
Farley Nuclear Plant

3 10 year Interval 1 40 Month Period 2 Outage Unit 1 / IER No. **001** Date **3/13/00**

PART I FINDINGS

Sketch Ref: **ALA2-4500** NDE Method: **UT** Procedure/Rev. **FNP-0-NDE-100.31 Rev. 7**
Item No. **28**
Component Inspected: **Tee to Pipe Weld (Main Steam)**
Description of Indication

During ultrasonic inspection of weld ALA2-4500-28 (Tee to Pipe), reflectors were recorded per Procedure with a peak amplitude of 40% DAC for a length of 0.71".

Prepared By **Danny Cordes SNC L/III** DRC Date **03/03/2000**

PART II SNC NDE INSPECTOR ASSESSMENT

Code References: **1989 ASME Section XI**

Evaluation: ID Geometry / Root.

Bases: **Evaluated as geometry per ASME Article III-4512.**

Review of Previous Examinations: **Data compares with 1988 examination report.**

NDE Inspector **Danny Cordes** DRC Certification Level **III** Date **03/13/00**

FIGURE C-1

PART III SNC EVALUATION AND DISPOSITION

Cause of Indication: **Indication (geometric reflector) typical of the fabrication process.**

Action Required to Correct Indication: **None Required**

None Required

MSR Number: **N/A**

LER Yes _____ No **X** 10CFR 21 Yes _____ No **X**

Corrective Action Taken:

None Required

Corrective Action Initiated to Prevent Recurrence:

None Required

Prepared By [signature] Date 3-16-2000

Approved By [signature] Date 3/20/2000

ANII Review: [signature] 3/21/00

SHARED

FARLEY NUCLEAR PLANT
Ultrasonic Calibration and Examination Record

FNP-0-NDE-100.31
Southern Nuclear Operating Company

Unit	Sketch/Component No.	Date	Sheet No.	
1	ALA2-4500-28	3/9/00	S00F1U017	Page 1 of 2

Procedure/Rev./TCN	Couplant/Batch No.	Thermometer SN/Cal Due Date	Linearity Sheet No.
FNP-0-NDE-100.31 / 7 / N/A	SONATRACE 40 / 94243	38081 / 8/27/2000	S00F1L005

Instrument			Search Unit		Calibration Block	
Instrument	STAVELEY		Transducer Mfg.	KBA	Cal. Blk. No.	ALA-26
Serial No.	136-911K		Serial No.	009R22	Thickness	.500"
	Ax. dB	Circ. dB	Size	.25	Cal. Temp.	72
Ref.	35.2	39.4	Frequency/Mode	2.25 / S	Cal. In	1145
Scan	43.2	47.4	"A" Dimension	.3	Cal. Chk.	1445
Reject	OFF		Nominal Angle	45	Cal. Out	1520
Frequency	2.25		Measured Angle	45	Ref. Blk. No.	796484
Mode	P/E		Cable Type	RG174	Reflector	HOLE
Damping	500 OHM		Cable Length	15'	Amplitude/Sweep	20% / 2.9

Axial Scan Calibration				Circ. Scan Calibration			
Cal. Refl.	Signal Amp.	Sweep Div.	Wmax	Cal. Refl.	Signal Amp.	Sweep Div.	Wmax
1T	80	2.0	.53	1T	80	2.2	.63
2T	40	4.0	1.10	2T	45	2.4	1.29
3T	25	6.0	1.59				
4T	18	8.0	2.12				

Calibration Remarks:
N/A

Comp. Temp.: 70 °F Configuration: TEE TO PIPE

Wo Location C/L Lo Location TDC

Scan Dir.	Results NI	NRI	RI	Ind. No.	% DAC	Length L1	Lmax	L2	Reference Measurement W1	Wmax	W2	Sweep Position S1	Smax	S2	Thickness 1"<–	C/L	–>1"	Notes:
2	●			N/A														
7	●			N/A														
8	●			N/A														
5			●	1	40%	27.1"	27.5"	0.31"		.468"			1.7		.58"	.4"	.42"	(1)

Examination/Limitation Remarks:

(1) INDICATION UNCHANGED FROM PREVIOUS DATA DATED 4/4/88

IER IR16001

Total Length of Weld	Crown Width	Total Length of Weld Examined	Extent of Perpendicular Scans (W)	Extent of Parallel Scans (L)
27.5"	.7"	5 (L) NL 2 (L) NL 7 & 8 (W) NL	5 - from NL to NL 2 - from NL to NL	From (5) NL to (2) NL

Primary Examiner	Level	Assistant Examiner	Level	Non-Technical Review	Date
GEORGE A. MORINI	II	N/A	N/A	Lynda Duke	3-13-00

SNC NDE Level II/III Review	Date	Percentage of Code Coverage	ANII Review	Date
Wayne Cordes L III	3-13-00	N/A %		3/21/00

Figure 1

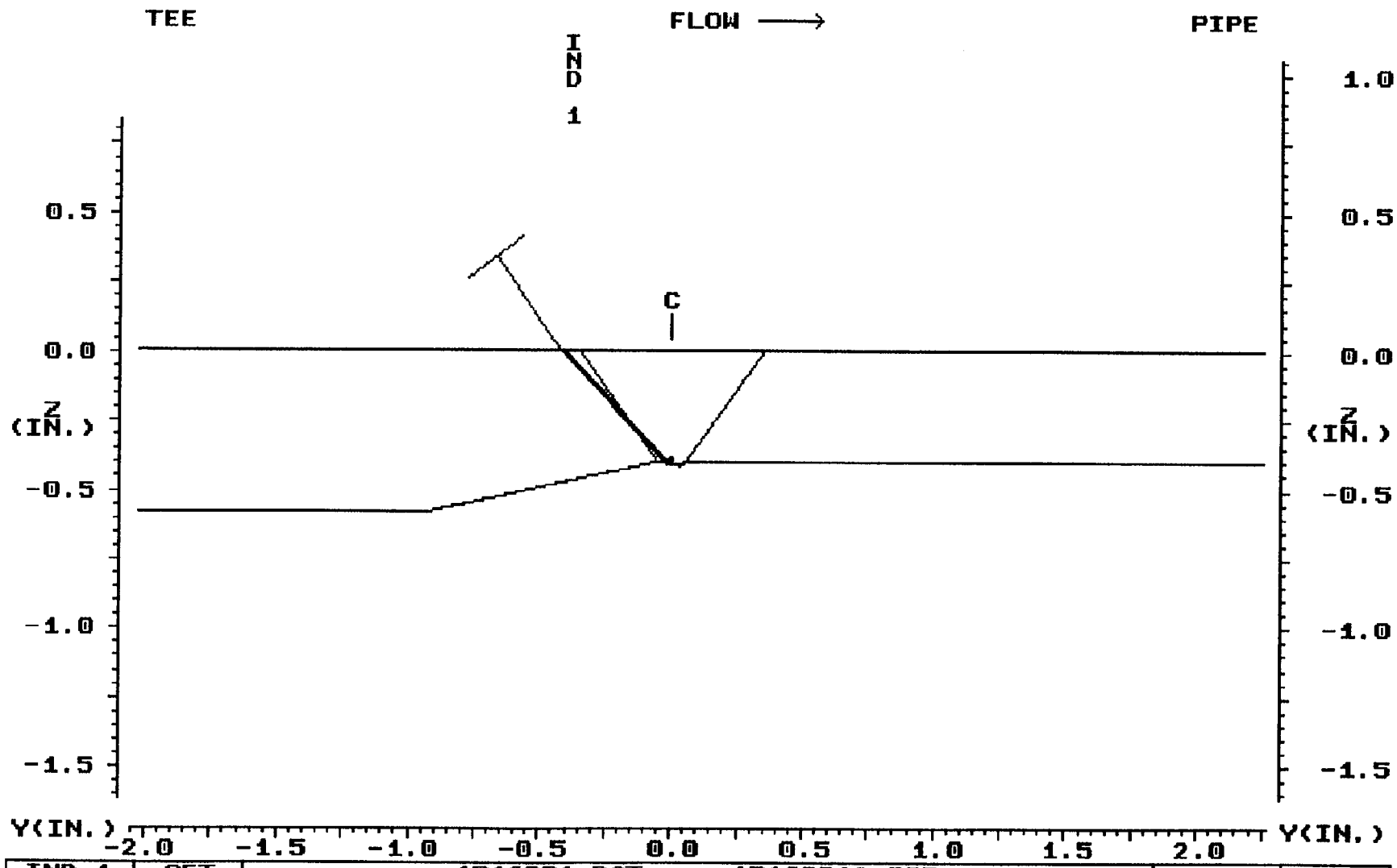

IND 1	SET	1R16001.DAT 1R16001A.SCR							SET
0.42	DEP								DEP
0.59	MP	INDICATION 1 - ID GEOMETRY / ROOT							MP
17.50	TOF								TOF
	ARC	COMPARES WITH PREVIOUS 1988 DATA							FAN
	GATE								GATE
0.100	STEP	DR CORDES L/III JRC							STEP
	EXIT	MAKERAY	UTILITY	LEFT	RIGHT	TOP	PRINT	EXIT	EXIT

PLANT: FARLEY 1
SYSTEM: MAIN STEAM
COMPONENT: ALA2-4500-28

3/13/00
11:20

CIRC. POS.: 27.5"
ANALYST: D.R. CORDES L/III
CAL. SHEET: S00F1U017

2 of 2

FIGURE C-1

NDE INDICATION EVALUATION REPORT
Farley Nuclear Plant

3 10 year Interval 1 40 Month Period 2 Outage Unit 1 / IER No. 002 Date 3/14/00

PART I FINDINGS

Sketch Ref: ALA2-4101 NDE Method: UT Procedure/Rev. FNP-0-NDE-100.31 Rev. 7
Item No. 12BC
Component Inspected: Main Steam Header to Branch Weld (Main Steam)
Description of Indication

During ultrasonic inspection of weld ALA2-4101-12BC (Header to Branch), a reflector was noted which was previously recorded during the 1988 outage and found to be acceptable per ASME.

Prepared By Danny Cordes SNC L/III DRC Date 03/14/00

PART II SNC NDE INSPECTOR ASSESSMENT

Code References: 1989 ASME Section XI

Evaluation: ASME Code acceptable sub-surface indication.

Bases: Evaluated as a sub-surface flaw per ASME Article III-4511. Spot indication with no major length or thruwall dimensions. Acceptable per ASME IWB-3514.

Review of Previous Examinations:

Data compares with 1988 examination report. Reference IER 012 from the 1988 2-1-1 outage.

NDE Inspector Danny Cordes DRC Certification Level III Date 03/14/00

FIGURE C-1

PART III SNC EVALUATION AND DISPOSITION

Cause of Indication: **Unknown. Probable welding flaw produced welding process.**

Action Required to Correct Indication: **None Required**

None Required

MSR Number: **N/A**

LER Yes _____ No **X** 10CFR 21 Yes _____ No **X**

Corrective Action Taken:

None Required

Corrective Action Initiated to Prevent Recurrence:

None Required

Prepared By Gary A. Lofthus Date 3-17-2000

Approved By LC Tomk Date 3/20/2000

Anti Review: CJ Wood 3/21/00

SHARED

FARLEY NUCLEAR PLANT
Ultrasonic Calibration and Examination Record

FNP-0-NDE-100.31
Southern Nuclear Operating Company

Unit	Sketch/Component No.	Date	Sheet No.	
1	ALA2-4101-12BC	3/13/00	S00F1U047	Page 1 of 2

Procedure/Rev./TCN	Couplant/Batch No.	Thermometer SN/Cal Due Date	Linearity Sheet No.
FNP-0-NDE-100.31 / 7 / N/A	SONATRACE 40 / 94243	38081 / 8/27/2000	S00F1L005

Instrument		Search Unit		Calibration Block	
Instrument	STAVELEY	Transducer Mfg.	KBA	Cal. Blk. No.	ALA-23
Serial No.	136-911K	Serial No.	0098JL	Thickness	2.31"
	Ax. dB / Circ. dB	Size	.50 X 1.0	Cal. Temp.	70
Ref.	41.8 / 41.8	Frequency/Mode	2.25 / S	Cal. In	0830
Scan	53.8 / 53.8	"A" Dimension	.75	Cal. Chk.	1105
Reject	OFF	Nominal Angle	45	Cal. Out	1300
Frequency	2.25	Measured Angle	45	Ref. Blk. No.	796484
Mode	P/E	Cable Type	RG174	Reflector	HOLE
Damping	500 OHMS	Cable Length	12'	Amplitude/Sweep	60% / 1.1

Axial Scan Calibration				Circ. Scan Calibration			
Cal. Refl.	Signal Amp.	Sweep Div.	Wmax	Cal. Refl.	Signal Amp.	Sweep Div.	Wmax
1T	80	3.0	2.25	1T	80	3.0	2.25
2T	35	6.0	4.5	2T	35	6.0	4.5
3T	20	9.0	6.75	3T	20	9.0	6.75

Calibration Remarks:
NONE

Comp. Temp.: 57 °F Configuration: BRANCH CONNECTION Wo Location C/L Lo Location DWNSTREAM

Scan Dir.	Results NI	NRI	RI	Ind. No.	% DAC	Length L1	Lmax	L2	Reference Measurement W1	Wmax	W2	Sweep Position S1	Smax	S2	Thickness 1"<--	C/L	-->1"	Notes:
2	●			N/A														(1)
5	●			N/A														
7			●	N/A														
8	●			N/A														

Examination/Limitation Remarks: (1) PREVIOUS INDICATIONS (1988) OBSERVED AT LOWER AMPLITUDE

WELDED ATTACHMENT RESTRICTS ALL SCANS FOR 18"

IER 1R16002 REFERENCE D-175302 FOR WELD PREP DESIGN. DNC

Total Length of Weld	Crown Width	Total Length of Weld Examined	Extent of Perpendicular Scans (W)	Extent of Parallel Scans (L)
60"	1.0"	5 (L) 42" 2 (L) 42" 7 & 8 (W) 42"	5 - from NL to NL 2 - from NL to NL	From (5) NL to (2) NL

Primary Examiner	Level	Assistant Examiner	Level	Non-Technical Review	Date
GEORGE A. MORINI	II	N/A	N/A	Lynda Duke	3-17-00

SNC NDE Level II/III Review	Date	Percentage of Code Coverage	ANII Review	Date
	3-17-00	N A %		3/21/00

Figure 1

Revision 7

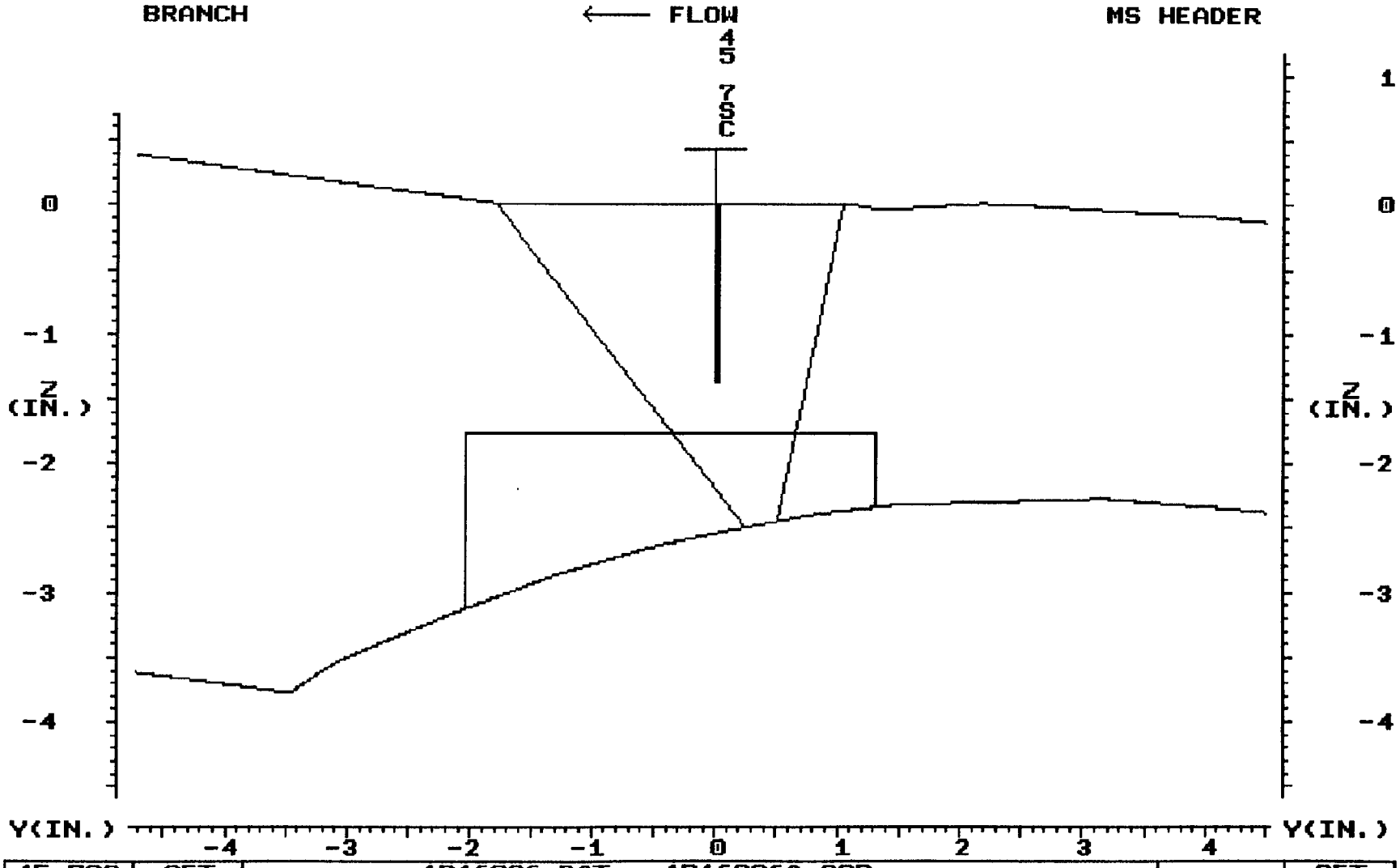

45 7SC	SET	1R16006.DAT 1R16006A.SCR							SET
1.38	DEP								DEP
1.38	MP	INDICATIONS OBSERVED FROM PREVIOUS 1988 DATA. SPOT							MP
20.12	TOF	INDICATION OUTSIDE OF ASME EXAM ZONE. NO							TOF
	ARC	MEASURABLE THRUWALL OR LENGTH DIMENSIONS. SHOWN							FAN
	GATE	HERE IN DEPTH (CIRC SCAN). ASME ACCEPTABLE.							GATE
0.050	STEP	DR CORDES L/III SEE IER 1R16002.							STEP
	EXIT	MAKERAY	UTILITY	LEFT	RIGHT	TOP	PRINT	EXIT	EXIT

PLANT: FARLEY 3/14/00 CIRC. POS.: 90 & 270
SYSTEM: MAIN STEAM 15:12 ANALYST: DR CORDES L/III
COMPONENT: ALA2-4101-12BC CAL. SHEET: S00F1U047

2 OF 2

FIGURE C-1

NDE INDICATION EVALUATION REPORT
Farley Nuclear Plant

3 10 year Interval **1** 40 Month Period **2** Outage Unit 1 / IER No. **003** Date **3/14/00**

PART I FINDINGS

Sketch Ref: **ALA2-4101** NDE Method: **UT** Procedure/Rev. **FNP-0-NDE-100.31 Rev. 7**
Item No. **13BC**
Component Inspected: **Main Steam Header to Branch Weld (Main Steam)**
Description of Indication

During ultrasonic inspection of weld ALA2-4101-13BC (Header to Branch), reflectors were noted which were previously recorded during the 1988 outage and found to be acceptable per ASME.

Prepared By **Danny Cordes SNC L/III** DRC Date **03/14/00**

PART II SNC NDE INSPECTOR ASSESSMENT

Code References: **1989 ASME Section XI**

Evaluation: **ASME Code acceptable sub-surface indications.**

Bases: **Evaluated as a sub-surface flaw per ASME Article III-4511. Spot indications with no major length or thruwall dimensions. Acceptable per ASME IWB-3514.**

Review of Previous Examinations:

Data compares with 1988 examination report. Reference IER 013 from the 1988 2-1-1 outage.

NDE Inspector **Danny Cordes** DRC Certification Level **III** Date **03/14/00**

FIGURE C-1

PART III SNC EVALUATION AND DISPOSITION

Cause of Indication: **Unknown. Probable welding flaw produced welding process.**

Action Required to Correct Indication: **None Required**

None Required

MSR Number: **N/A**

LER Yes _____ No **X** 10CFR 21 Yes _____ No **X**

Corrective Action Taken:

None Required

Corrective Action Initiated to Prevent Recurrence:

None Required

Prepared By [signature] Date 3-17-2000

Approved By [signature] Date 3/20/2000

ANI REVIEW: [signature] 3/21/00

SHARED

FARLEY NUCLEAR PLANT
Ultrasonic Calibration and Examination Record

FNP-0-NDE-100.31
Southern Nuclear Operating Company

Unit	Sketch/Component No.	Date	Sheet No.
1	ALA2-4101-13BC	3/13/00	S00F1U048

Page 1 of 2

Procedure/Rev./TCN	Couplant/Batch No.	Thermometer SN/Cal Due Date	Linearity Sheet No.
FNP-0-NDE-100.31 / 7 / N/A	SONATRACE 40 / 94243	38081 / 8/27/2000	S00F1L005

Instrument			Search Unit		Calibration Block	
Instrument	STAVELEY		Transducer Mfg.	KBA	Cal. Blk. No.	ALA-23
Serial No.	136-911K		Serial No.	0098JL	Thickness	2.31"
	Ax. dB	Circ. dB	Size	.50 X 1.0	Cal. Temp.	70
Ref.	41.8	41.8	Frequency/Mode	2.25 / S	Cal. In	0830
Scan	53.8	53.8	"A" Dimension	.75	Cal. Chk.	1113
Reject	OFF		Nominal Angle	45	Cal. Out	1300
Frequency	2.25		Measured Angle	45	Ref. Blk. No.	796484
Mode	P/E		Cable Type	RG174	Reflector	HOLE
Damping	500 OHMS		Cable Length	12'	Amplitude/Sweep	60% / 1.1

Axial Scan Calibration				Circ. Scan Calibration			
Cal. Refl.	Signal Amp.	Sweep Div.	Wmax	Cal. Refl.	Signal Amp.	Sweep Div.	Wmax
1T	80	3.0	2.25	1T	80	3.0	2.25
2T	35	6.0	4.5	2T	35	6.0	4.5
3T	20	9.0	6.75	3T	20	9.0	6.75

Calibration Remarks:
NONE

Comp. Temp.: 57 °F Configuration: BRANCH CONNECTION Wo Location C/L Lo Location DWNSTREAM

Scan Dir.	Results NI	NRI	RI	Ind. No.	% DAC	Length L1	Lmax	L2	Reference Measurement W1	Wmax	W2	Sweep Position S1	Smax	S2	Thickness 1"<–	C/L	–>1"	Notes:
2	●			N/A														(1)
5			●	N/A														
7	●			N/A														
8			●	N/A														

Examination/Limitation Remarks: (1) PREVIOUS INDICATION (1988) OBSERVED AT LOWER AMPLITUDE

WELDED ATTACHMENT RESTRICTS ALL SCANS FOR 18"

IER 1R16 003 REFERENCE D-175302 FOR WELD PROP DESIGN. DRC 3-14-00

Total Length of Weld	Crown Width	Total Length of Weld Examined	Extent of Perpendicular Scans (W)	Extent of Parallel Scans (L)
60"	1.2"	5 (L) 42" 2 (L) 42" 7 & 8 (W) 42"	5 - from NL to NL 2 - from NL to NL	From (5) NL to (2) NL

Primary Examiner	Level	Assistant Examiner	Level	Non-Technical Review	Date
GEORGE A. MORINI	II	N/A	N/A	Lynda Duke	3-17-00

SNC NDE Level II/III Review	Date	Percentage of Code Coverage	ANII Review	Date
Larry Cooks L III	3-17-00	N/A %		3/21/00

Figure 1

Revision 7

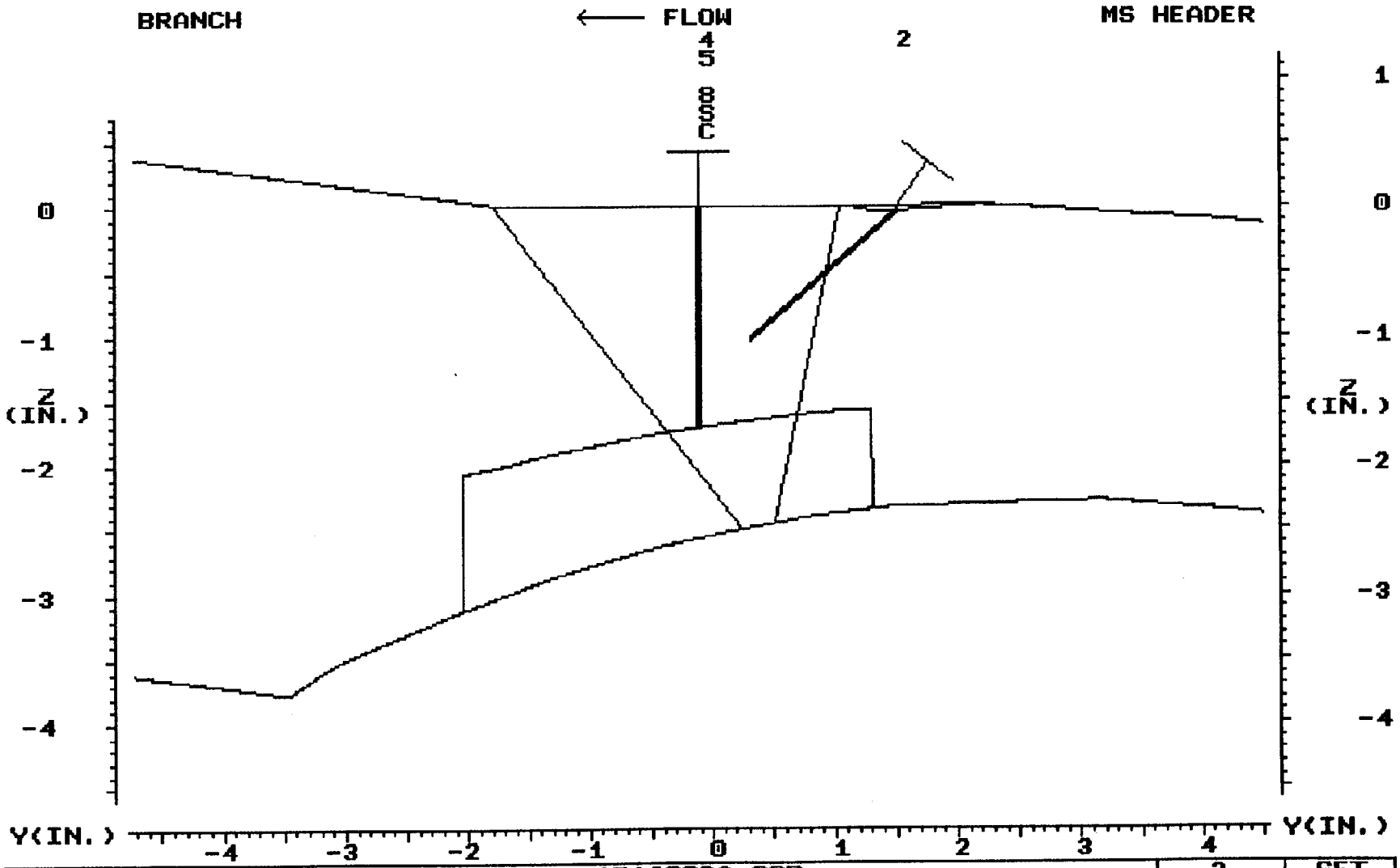

45 8SC	SET	1R16002.DAT 1R16002A.SCR						2	SET
1.73	DEP							1.15	DEP
1.73	MP	INDICATIONS OBSRVED FROM PREVIOUS 1988 DATA. SPOT						1.63	MP
23.20	TOF	INDICATIONS OUTSIDE OF ASME EXAM ZONE. NO						34.09	TOF
	ARC	MEASURABLE THRUWALL OR LENGTH DIMENSIONS. SHOWN							ARC
	GATE	HERE IN DEPTH (CIRC SCAN) AND MP (AX SCAN). ASME							GATE
0.050	STEP	ACCEPTABLE. SEE IER 1R16003. DR CORDES L/III. JDC						0.050	STEP
	EXIT	MAKERAY	UTILITY	LEFT	RIGHT	TOP	PRINT	EXIT	EXIT

PLANT: FARLEY
SYSTEM: MAIN STEAM
COMPONENT: ALA2-4101-13BC

3/14/00
15:33

CIRC. POS.: 90 & 270
ANALYST: DR CORDES L/III
CAL. SHEET: S00F1U048

2 of 2

FIGURE C-1

NDE INDICATION EVALUATION REPORT
Farley Nuclear Plant

3 10 year Interval 1 40 Month Period 2 Outage Unit 1 / IER No. **004** Date **3/14/00**

PART I FINDINGS

Sketch Ref: **ALA2-4101** NDE Method: **UT** Procedure/Rev. **FNP-0-NDE-100.31 Rev. 7**
Item No. **14BC**
Component Inspected: **Main Steam Header to Branch Weld (Main Steam)**
Description of Indication

During ultrasonic inspection of weld ALA2-4101-14BC (Header to Branch), a reflector was noted which was previously recorded during the 1988 outage and found to be acceptable per ASME.

Prepared By **Danny Cordes SNC L/III** DRC Date **03/14/00**

PART II SNC NDE INSPECTOR ASSESSMENT

Code References: **1989 ASME Section XI**

Evaluation: **ASME Code acceptable sub-surface indication.**

Bases: **Evaluated as a sub-surface flaw per ASME Article III-4511. Spot indication with no major length or thruwall dimensions. Acceptable per ASME IWB-3514.**

Review of Previous Examinations:

Data compares with 1988 examination report. Reference IER 014 from the 1988 2-1-1 outage.

NDE Inspector **Danny Cordes** DRC Certification Level **III** Date **03/14/00**

FIGURE C-1

PART III SNC EVALUATION AND DISPOSITION

Cause of Indication: **Unknown. Probable welding flaw produced welding process.**

Action Required to Correct Indication: **None Required**

None Required

MSR Number: **N/A**

LER Yes _____ No **X** 10CFR 21 Yes _____ No **X**

Corrective Action Taken:

None Required

Corrective Action Initiated to Prevent Recurrence:

None Required

Prepared By Gary A. Lifflo Date 3-17-2000

Approved By K L Jones Date 3/20/2000

ANII REVIEW: CG Ward 3/21/00

SHARED

FARLEY NUCLEAR PLANT
Ultrasonic Calibration and Examination Record

FNP-0-NDE-100.31
Southern Nuclear Operating Company

Unit	Sketch/Component No.	Date	Sheet No.
1	ALA2-4101-14BC	3/13/00	S00F1U049

Page 1 of 2

Procedure/Rev./TCN	Couplant/Batch No.	Thermometer SN/Cal Due Date	Linearity Sheet No.
FNP-0-NDE-100.31 / 7 / N/A	SONATRACE 40 / 94243	38081 / 8/27/2000	S00F1L005

Instrument			Search Unit		Calibration Block	
Instrument	STAVELEY		Transducer Mfg.	KBA	Cal. Blk. No.	ALA-23
Serial No.	136-911K		Serial No.	0098JL	Thickness	2.31"
	Ax. dB	Circ. dB	Size	.50 X 1.0	Cal. Temp.	70
Ref.	41.8	41.8	Frequency/Mode	2.25 / S	Cal. In	0830
Scan	53.8	53.8	"A" Dimension	.75	Cal. Chk.	1120
Reject	OFF		Nominal Angle	45	Cal. Out	1300
Frequency	2.25		Measured Angle	45	Ref. Blk. No.	796484
Mode	P/E		Cable Type	RG174	Reflector	HOLE
Damping	500 OHMS		Cable Length	12'	Amplitude/Sweep	60% / 1.1

Axial Scan Calibration				Circ. Scan Calibration			
Cal. Refl.	Signal Amp.	Sweep Div.	Wmax	Cal. Refl.	Signal Amp.	Sweep Div.	Wmax
1T	80	3.0	2.25	1T	80	3.0	2.25
2T	35	6.0	4.5	2T	35	6.0	4.5
3T	20	9.0	6.75	3T	20	9.0	6.75

Calibration Remarks:
NONE

Comp. Temp.: 57 °F Configuration: BRANCH CONNECTION Wo Location C/L Lo Location DWNSTREAM

Scan Dir.	Results NI	NRI	RI	Ind. No.	% DAC	Length L1	Lmax	L2	Reference Measurement W1	Wmax	W2	Sweep Position S1	Smax	S2	Thickness 1"<--	C/L	-->1"	Notes:
2	●			N/A														(1)
5			●	N/A														
7	●			N/A														
8	●			N/A														

Examination/Limitation Remarks:

(1) PREVIOUS INDICATIONS (1988) OBSERVED AT LOWER AMPLITUDE

IER IR16004 REFERENCE D-175302 FOR WELD PREP DESIGN, DPC 3-14-00

Total Length of Weld	Crown Width	Total Length of Weld Examined	Extent of Perpendicular Scans (W)	Extent of Parallel Scans (L)
60"	1"	5 (L) NL 2 (L) NL 7 & 8 (W) NL	5 - from NL to NL 2 - from NL to NL	From (5) NL to (2) NL

Primary Examiner	Level	Assistant Examiner	Level	Non-Technical Review	Date
GEORGE A. MORINI	II	N/A	N/A	Lynda Duke	3-17-00

SNC NDE Level II/III Review	Date	Percentage of Code Coverage	ANII Review	Date
[signature] L III	3-17-00	N/A %	[signature]	3/21/00

Figure 1

Revision 7

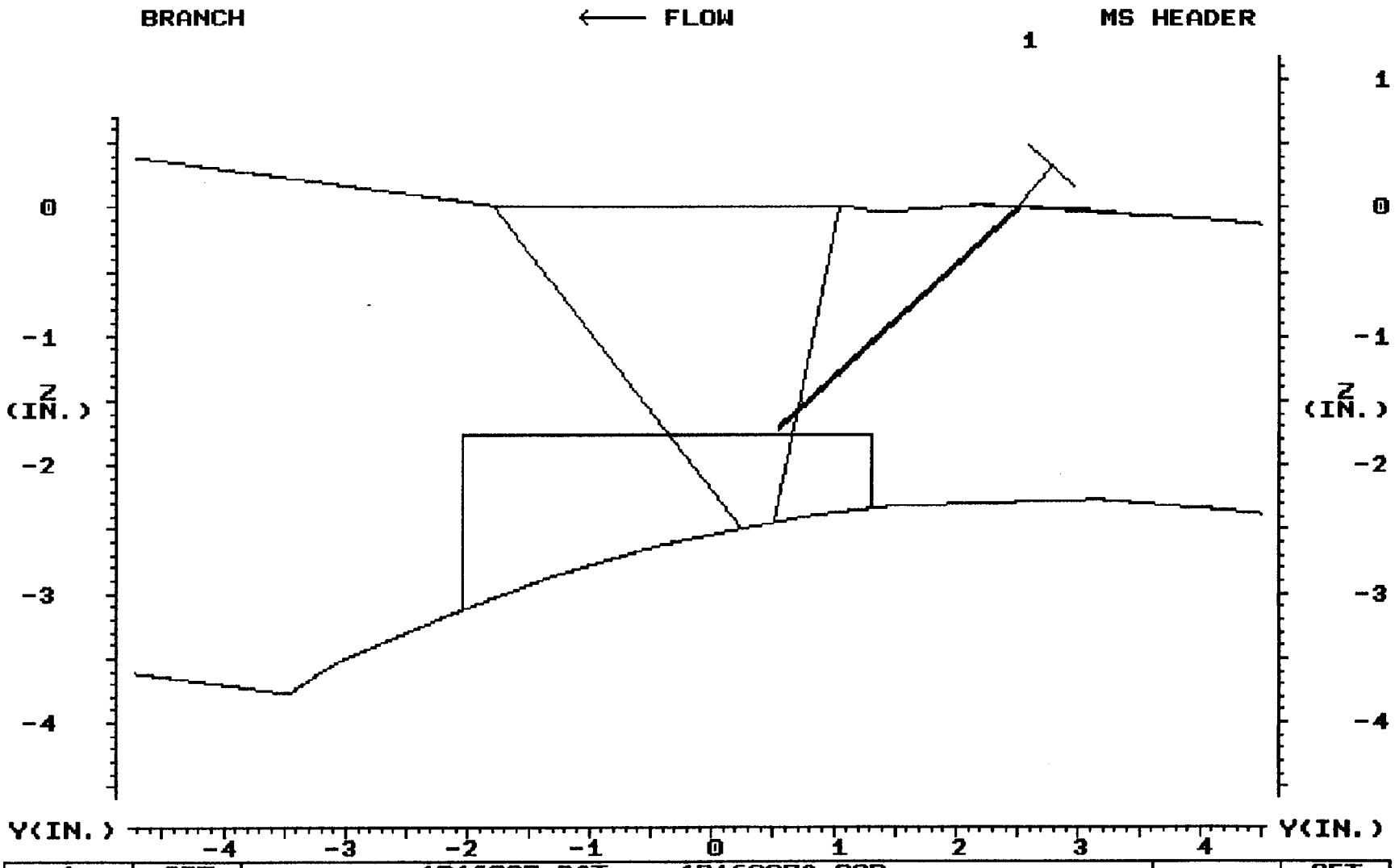

1	SET	1R16007.DAT 1R16007A.SCR								SET
1.84	DEP									DEP
2.61	MP	INDICATION OBSERVED FROM PREVIOUS 1988 DATA. SPOT								MP
49.73	TOF	INDICATION OUTSIDE OF ASME EXAM ZONE. NO								TOF
	ARC	MEASURABLE THRUWALL OR LENGTH DIMENSIONS.								FAN
	GATE	ASME ACCEPTABLE. SEE IER 1R16004.								GATE
0.050	STEP	DR CORDES L/III. JRC								STEP
	EXIT	MAKERAY	UTILITY	LEFT	RIGHT	TOP	PRINT	EXIT		EXIT

PLANT: FARLEY
SYSTEM: MAIN STEAM
COMPONENT: ALA2-4101-14BC

3/15/00
6:56

CIRC. POS.: 90 & 270
ANALYST: DR CORDES L/III
CAL. SHEET: S00F1U049

2 OF 2

FIGURE C-1

NDE INDICATION EVALUATION REPORT
Farley Nuclear Plant

3 10 year Interval 1 40 Month Period 2 Outage Unit 1 / IER No. 005 Date 3/16/00

PART I FINDINGS

Sketch Ref: ALA2-3500 NDE Method: PT Procedure/Rev. FNP-0-NDE-100.5 Rev. 6
Item No. Weld 3
Component Inspected: Nozzle Reinforcement Weld (RHR HT EX)
Description of Indication

During liquid penetrant examination of the integral attachment weld, indications were observed which were previously recorded during the 1991 outage and found to be acceptable per ASME.

Prepared By Danny Cordes SNC L/III DRC Date 03/16/00

PART II SNC NDE INSPECTOR ASSESSMENT

Code References: 1989 ASME Section XI

Evaluation: ASME Code acceptable surface indications.

Bases: Examination category C-B/C2.31 refers to IWC-3511 (IWC-3511.2) and table IWC-3511-2, which references ferritic steels (also same thru 1998). The shell has a nominal thickness of 0.875" (7/8"). Indications of up to and including 3/16" (0.1875) for a wall thickness of ≤ ½" are considered to be acceptable per this table.

Table IWB-3514-2 (Austenetic Piping) allows indications of 0.2" to be acceptable for a wall thickness of 0.312".

Review of Previous Examinations:

Data compares with 1991 examination report. Reference IER 001 from the 1988 2-1-3 outage.

NDE Inspector Danny Cordes DRC Certification Level III Date 03/16/00

FIGURE C-1

PART III SNC EVALUATION AND DISPOSITION

Cause of Indication: **Unknown. Probable welding flaw produced welding process.**

Action Required to Correct Indication: **None Required**

None Required

MSR Number: **N/A**

LER Yes ____ No **X** 10CFR 21 Yes ____ No **X**

Corrective Action Taken:

None Required

Corrective Action Initiated to Prevent Recurrence:

None Required

Prepared By [signature] Date 3-20-2000

Approved By [signature] Date 3/20/2000

ANII Review: [signature] 3/21/00

SHARED

FNP-0-NDE-100.5
PT-F-Form 001
Southern Nuclear Operating Company

Farley Nuclear Plant
Liquid Penetrant Examination Record

Unit	Component Number	Procedure/Rev./TCN	Sheet No.
1	ALA2-3500-3	FNP-0-NDE-100.5 / 6 / N/A	S00F1P006 Page 1 of 1

Thermometer		Penetrant Materials		
Mfg. / Ser. No.	PTC / 38180	Manufacturer MAGNAFLUX	Type	Batch
Cal. Due Date	8/27/2000	Cleaner/Remover	SKC-S	98A10K
Surface Temp.	77 °F	Penetrant	SKL-SP	93D12K
		Developer	SKD-S2	96J08K

Component Configuration			Date
RESID HX A IN NOZZ REINF WELD	% of Length Coverage 100	% of Area Coverage 100	3/15/00

Ind. No.	Results	Indication Desc. / Exam Limitations / etc.	Remarks
~~N/A~~ 1-3 JRC 3-17-00	RI	3 LINEAR INDICATIONS SEPARATED BY .4" MINIMUM WITH LENGTHS OF 1/16, 5/32, AND 3/16	N/A

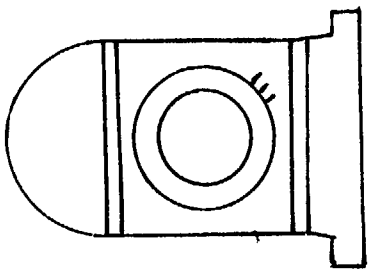

LOOKING UP

Remarks: SEE IER 1R16005 JRC

Primary Examiner	ASNT Level	Initials	Assistant Examiner	ASNT Level	Initials	Non-Technical Review	Date
CLYDE KIEHL	II	CWK	JOHN W. BELL	II	JWB	Lynda Duke	3-16-00

SNC NDE Level II/III Review	Date	Percentage of Code Coverage	ANII Review	Date
Jerry Cordes L III	3-17-00	100 %	[illegible]	3/21/00

Figure 1

Revision 6

FIGURE C-1

NDE INDICATION EVALUATION REPORT
Farley Nuclear Plant

3 10 year Interval 1 40 Month Period 2 Outage Unit 1 / IER No. **006** Date **3/24/00**

PART I FINDINGS

Sketch Ref: **ALA2-4500** NDE Method: **UT** Procedure/Rev. **FNP-0-NDE-100.31 Rev. 7**
Item No. **1**
Component Inspected: **Cap to Tee Weld (Main Steam)**
Description of Indication

During ultrasonic inspection of weld ALA2-4500-1 (Cap to Tee), a reflector was recorded per procedure with a peak amplitude of 178% DAC.

Prepared By **Danny Cordes SNC L/III** Date **03/24/2000**

PART II SNC NDE INSPECTOR ASSESSMENT

Code References: **1989 ASME Section XI**

Evaluation: ID Geometry

Bases: **Evaluated as geometry per ASME Article III-4512.**

Typical ultrasonic reflectors resulting from the OD and ID piping configuration (reference the ultrasonic data report S00F1U103).

Review of Previous Examinations: **Data compares with 1988 examination report. (IER 016)**

NDE Inspector **Danny Cordes** Certification Level **III** Date **03/24/00**

FIGURE C-1

PART III SNC EVALUATION AND DISPOSITION

Cause of Indication: **Geometric reflector from piping configuration.**

Action Required to Correct Indication: **None Required**

None Required

MSR Number: **N/A**

LER Yes _____ No **X** 10CFR 21 Yes _____ No **X**

Corrective Action Taken:

None Required

Corrective Action Initiated to Prevent Recurrence:

None Required

Prepared By [signature] Date 3-27-00

Approved By [signature] Date 3/27/00

ANI Review: [signature] 3/28/00

SHaRED

FARLEY NUCLEAR PLANT
Ultrasonic Calibration and Examination Record

FNP-0-NDE-100.31
Southern Nuclear Operating Company

Unit	Sketch/Component No.	Date	Sheet No.	
1	ALA2-4500-1	3/21/00	S00F1U103	Page 1 of 2

Procedure/Rev./TCN	Couplant/Batch No.	Thermometer SN/Cal Due Date	Linearity Sheet No.
FNP-0-NDE-100.31 / 7 / N/A	SONOTRACE 40 / 94243	38180 / 8/27/2000	S00F1L005

Instrument			Search Unit		Calibration Block	
Instrument	STAVELEY		Transducer Mfg.	KBA	Cal. Blk. No.	~~ALA-24~~ APR-4
Serial No.	136-911K		Serial No.	009KTR	Thickness	~~1.20"~~ 1.81"
	Ax. dB	Circ. dB	Size	.50	Cal. Temp.	68°
Ref.	29.2	31.0	Frequency/Mode	2.25 / S	Cal. In	0819
Scan	39.2	41.0	"A" Dimension	.5"	Cal. Chk.	1025
Reject	OFF		Nominal Angle	45	Cal. Out	1220
Frequency	2.25		Measured Angle	45	Ref. Blk. No.	796484
Mode	P/E		Cable Type	RG174	Reflector	HOLE
Damping	500 OHMS		Cable Length	15'	Amplitude/Sweep	22%/1.4

Axial Scan Calibration				Circ. Scan Calibration			
Cal. Refl.	Signal Amp.	Sweep Div.	Wmax	Cal. Refl.	Signal Amp.	Sweep Div.	Wmax
1T	80	3.0	1.81	1T	80	3.2	2.15
2T	30	6.0	3.62	2T	20	6.4	4.29
3T	12	9.0	5.40				

Calibration Remarks:
NONE

Comp. Temp.: 62 °F Configuration: CAP TO TEE Wo Location WELD CL Lo Location TDC

Scan Dir.	Results NI	NRI	RI	Ind. No.	% DAC	Length L1	Lmax	L2	Reference Measurement W1	Wmax	W2	Sweep Position S1	Smax	S2	Thickness 1"<--	C/L	-->1"	Notes:
2			●	1	178%	113.05	0.00	0.20	4.7	5.0	5.3	8.1	8.3	8.4	1.88	1.24	1.22	
7	●			N/A														
8	●			N/A														

Examination/Limitation Remarks: **(1) REFERENCE S00F1U104 FOR 5 SCAN (ALA-24). TAPER LIMITS 2 SCAN FROM 0" TO 1.9".**

Total Length of Weld	Crown Width	Total Length of Weld Examined	Extent of Perpendicular Scans (W)	Extent of Parallel Scans (L)
113.25	1.6"	5 (L) N/A 2 (L) NL 7 & 8 (W) NL	5 - from (1) to (1) 2 - from 1.9" to NL	From (5) NL to (2) NL

Primary Examiner	Level	Assistant Examiner	Level	Non-Technical Review	Date
JOSEPH D. FUNYAK	II	N/A	N/A		3-22-00

SNC NDE Level II/III Review	Date	Percentage of Code Coverage	ANII Review	Date
L III	3-24-00	NA %		3/28/00

Figure 1

Revision 7

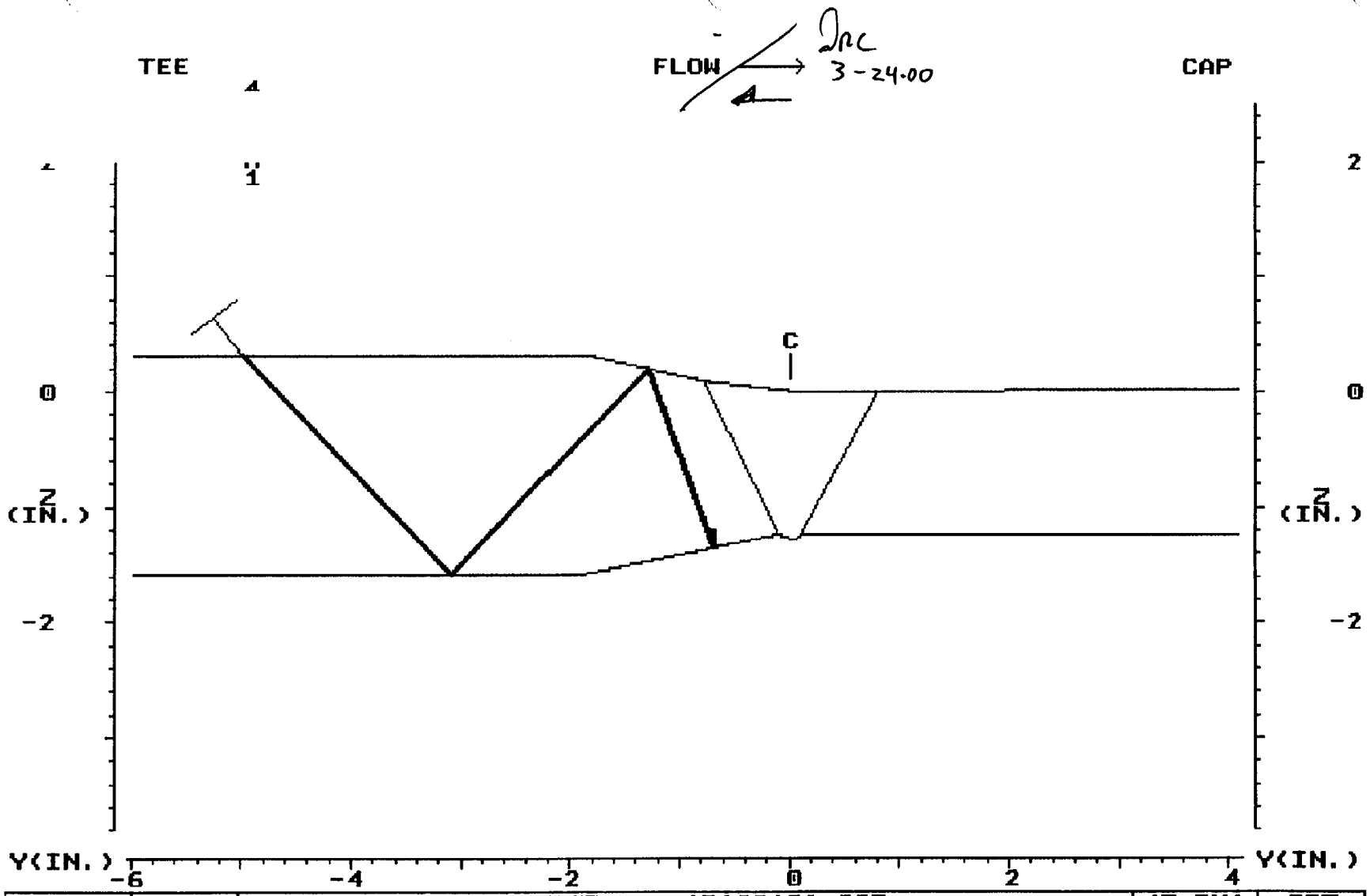

45 IN1	SET	1R16018.DAT 1R16018A.SCR							45 IN1	SET
4.99	DEP								0.00	DEP
7.05	MP	45 DEG IND # 1 - ID GEOMETRY							0.00	MP
120.80	TOF								8.00	TOF
	ARC	COMPARES WITH 1988 DATA								FAN
	GATE									GATE
0.050	STEP	DR CORDES L/III DRC							1.000	STEP
	EXIT	MAKERAY	UTILITY	LEFT	RIGHT	TOP	PRINT	EXIT		EXIT

PLANT: FARLEY 1 — 3/24/00 — CIRC. POS.: TYP
SYSTEM: MAIN STEAM — ANALYST: DR CORDES L/III
COMPONENT: ALA2-4500-1 — 11:49 — CAL. SHEET: S00F1U103

2 of 2

SHARED

FARLEY NUCLEAR PLANT
Ultrasonic Calibration and Examination Record

FNP-0-NDE-100.31
Southern Nuclear Operating Company

Unit	Sketch/Component No.	Date	Sheet No.	
1	ALA2-4500-1	3/21/00	S00F1U104	Page 1 of 1

Procedure/Rev./TCN	Couplant/Batch No.	Thermometer SN/Cal Due Date	Linearity Sheet No.
FNP-0-NDE-100.31 / 7 / N/A	SONOTRACE 40 / 94243	38180 / 8/27/2000	S00F1L005

Instrument			Search Unit		Calibration Block	
Instrument	STAVELEY		Transducer Mfg.	KBA	Cal. Blk. No.	ALA-24
Serial No.	136-911K		Serial No.	009KTR	Thickness	1.20"
	Ax. dB	Circ. dB	Size	.50	Cal. Temp.	68°
Ref.	28.2	30.8	Frequency/Mode	2.25 / S	Cal. In	0810
Scan	38.2	40.8	"A" Dimension	.5"	Cal. Chk.	1010
Reject	OFF		Nominal Angle	45	Cal. Out	1215
Frequency	2.25		Measured Angle	45	Ref. Blk. No.	796484
Mode	P/E		Cable Type	RG174	Reflector	HOLE
Damping	500 OHMS		Cable Length	15'	Amplitude/Sweep	20%/1.2

Axial Scan Calibration				Circ. Scan Calibration			
Cal. Refl.	Signal Amp.	Sweep Div.	Wmax	Cal. Refl.	Signal Amp.	Sweep Div.	Wmax
1T	80	2.0	1.20	1T	80	2.1	1.30
2T	40	4.0	2.30	2T	40	4.2	2.60
3T	20	6.0	3.50				
4T	15	8.0	4.60				

Calibration Remarks:
NONE

Comp. Temp.: 62 °F Configuration: CAP TO TEE Wo Location WELD CL Lo Location TDC

Scan Dir.	Results NI	NRI	RI	Ind. No.	% DAC	Length L1	Lmax	L2	Reference Measurement W1	Wmax	W2	Sweep Position S1	Smax	S2	Thickness 1"<--	C/L	-->1"	Notes:
5	●			N/A														
7	●			N/A														
8	●			N/A														

Examination/Limitation Remarks: (1) REFERENCE S00F1U103 FOR 2 SCAN (APR-4).

Total Length of Weld	Crown Width	Total Length of Weld Examined	Extent of Perpendicular Scans (W)	Extent of Parallel Scans (L)
113.25	1.6"	5 (L) NL 2 (L) N/A 7 & 8 (W) NL	5 - from NL to NL 2 - from (1) to (1)	From (5) NL to (2) NL

Primary Examiner	Level	Assistant Examiner	Level	Non-Technical Review	Date
JOSEPH D. FUNYAK	II	N/A	N/A		3-22-00

SNC NDE Level II/III Review	Date	Percentage of Code Coverage	ANII Review	Date
Larry Cooley L III	3-24-00	N/A %		3/28/00

Figure 1

Revision 7

FIGURE C-1

NDE INDICATION EVALUATION REPORT
Farley Nuclear Plant

3 10 year Interval 1 40 Month Period 2 Outage Unit 1 / IER No. **007** Date **3/24/00**

PART I FINDINGS

Sketch Ref: **ALA2-4500** NDE Method: **UT** Procedure/Rev. **FNP-0-NDE-100.31 Rev. 7**
Item No. **2**
Component Inspected: **Cap to Tee Weld (Main Steam)**
Description of Indication

During ultrasonic inspection of weld ALA2-4500-2 (Tee to Pipe), a reflector was recorded per procedure with a peak amplitude of 70% DAC.

Prepared By **Danny Cordes SNC L/III** Date **03/24/2000**

PART II SNC NDE INSPECTOR ASSESSMENT

Code References: **1989 ASME Section XI**

Evaluation: ID Geometry

Bases: **Evaluated as geometry per ASME Article III-4512.**

Typical ultrasonic reflectors resulting from the OD and ID piping configuration (reference the ultrasonic data report S00F1U107).

0
Review of Previous Examinations: **Data compares with 1988 examination report. (IER 017)**

NDE Inspector **Danny Cordes** Certification Level **III** Date **03/24/00**

FIGURE C-1

PART III SNC EVALUATION AND DISPOSITION

Cause of Indication: **Geometric reflector from piping configuration.**

Action Required to Correct Indication: **None Required**

None Required

MSR Number: **N/A**

LER Yes ____ No **X** 10CFR 21 Yes ____ No **X**

Corrective Action Taken:

None Required

Corrective Action Initiated to Prevent Recurrence:

None Required

Prepared By [signature] Date 3-27-00

Approved By [signature] Date 3/27/00

ANII REVIEW: [signature] 3/28/00

SHaRED

FARLEY NUCLEAR PLANT
Ultrasonic Calibration and Examination Record

FNP-0-NDE-100.31
Southern Nuclear Operating Company

Unit	Sketch/Component No.	Date	Sheet No.	
1	ALA2-4500-2	3/21/00	S00F1U107	Page 1 of 2

Procedure/Rev./TCN	Couplant/Batch No.	Thermometer SN/Cal Due Date	Linearity Sheet No.
FNP-0-NDE-100.31 / 7 / N/A	SONOTRACE 40 / 94243	38180 / 8/27/2000	S00F1L005

Instrument		Search Unit		Calibration Block	
Instrument	STAVELEY	Transducer Mfg.	KBA	Cal. Blk. No.	APR-4
Serial No.	136-911K	Serial No.	009KTR	Thickness	1.810"
	Ax. dB / Circ. dB	Size	.50	Cal. Temp.	68°
Ref.	29.2 / 31.0	Frequency/Mode	2.25 /	Cal. In	0819
Scan	39.2 / 41.0	"A" Dimension	.5"	Cal. Chk.	1110
Reject	OFF	Nominal Angle	45	Cal. Out	1220
Frequency	2.25	Measured Angle	45	Ref. Blk. No.	796484
Mode	P/E	Cable Type	RG174	Reflector	HOLE
Damping	500 OHMS	Cable Length	15'	Amplitude/Sweep	22%/1.4

Axial Scan Calibration				Circ. Scan Calibration			
Cal. Refl.	Signal Amp.	Sweep Div.	Wmax	Cal. Refl.	Signal Amp.	Sweep Div.	Wmax
1T	80	3.0	1.81	1T	80	3.2	2.15
2T	30	6.0	3.62	2T	20	6.4	4.29
3T	12	9.0	5.40				

Calibration Remarks:
NONE

Comp. Temp.: 62 °F Configuration: TEE TO PIPE Wo Location WELD CL Lo Location TDC

Scan Dir.	Results NI	NRI	RI	Ind. No.	% DAC	Length L1	Lmax	L2	Reference Measurement W1	Wmax	W2	Sweep Position S1	Smax	S2	Thickness 1"<--	C/L	-->1"	Notes:
5			●	1	70		113.25			5.0			8.5		1.84	1.20	1.30	SPOT IND
7	●			N/A														
8	●			N/A														

Examination/Limitation Remarks: (1) REFERENCE S00F1U106 FOR 2 SCAN (ALA-24). TAPER LIMITS 5 SCAN FROM 0" TO 1.6".

Total Length of Weld	Crown Width	Total Length of Weld Examined	Extent of Perpendicular Scans (W)	Extent of Parallel Scans (L)
113.25	1.6"	5 (L) NL 2 (L) (1) 7 & 8 (W) NL	5 - from 1.6 to NL 2 - from (1) to (1)	From (5) NL to (2) NL

Primary Examiner	Level	Assistant Examiner	Level	Non-Technical Review	Date
JOSEPH D. FUNYAK	II	N/A	N/A		3-28-00

SNC NDE Level II/III Review	Date	Percentage of Code Coverage	ANII Review	Date
L III	3-24-00	N/A %		3/28/00

Figure 1

Revision 7

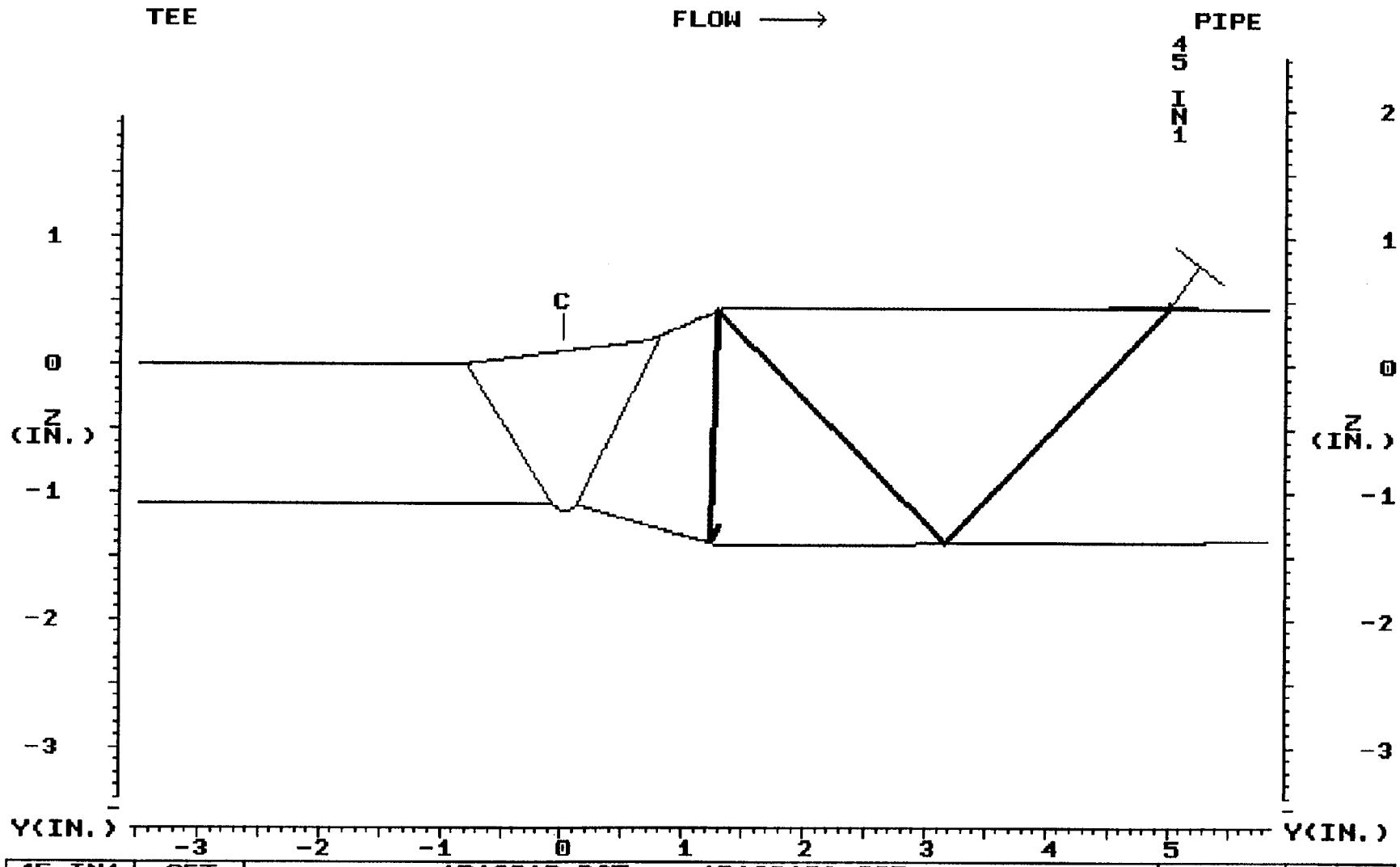

45 IN1	SET	1R16019.DAT 1R16019A.SCR							SET
5.10	DEP								DEP
7.22	MP	45 DEG IND 1 - ID GEOMETRY							MP
123.45	TOF								TOF
	ARC	COMPARES WITH 1988 DATA							FAN
	GATE								GATE
0.050	STEP	DR CORDES L/III							STEP
	EXIT	MAKERAY	UTILITY	LEFT	RIGHT	TOP	PRINT	EXIT	EXIT

PLANT: FARLEY 1 3/24/00 CIRC. POS.: TYP
SYSTEM: MAIN STEAM 12:40 ANALYST: DR CORDES L/III
COMPONENT: ALA2-4500-2 CAL. SHEET: S00F1U102

DRC 3-24-00

S00F1U107

SHaRED

FARLEY NUCLEAR PLANT
Ultrasonic Calibration and Examination Record

FNP-0-NDE-100.31
Southern Nuclear Operating Company

Unit	Sketch/Component No.	Date	Sheet No.	
1	ALA2-4500-2	3/21/00	S00F1U106	Page 1 of 1

Procedure/Rev./TCN	Couplant/Batch No.	Thermometer SN/Cal Due Date	Linearity Sheet No.
FNP-0-NDE-100.31 / 7 / N/A	SONOTRACE 40 / 94243	38180 / 8/27/2000	S00F1L005

Instrument			Search Unit		Calibration Block	
Instrument	STAVELEY		Transducer Mfg.	KBA	Cal. Blk. No.	ALA-24
Serial No.	136-911K		Serial No.	009KTR	Thickness	1.20"
	Ax. dB	Circ. dB	Size	.50	Cal. Temp.	68°
Ref.	28.2	30.8	Frequency/Mode	2.25 / 5	Cal. In	0810
Scan	38.2	40.8	"A" Dimension	.5"	Cal. Chk.	1135
Reject	OFF		Nominal Angle	45	Cal. Out	1215
Frequency	2.25		Measured Angle	45	Ref. Blk. No.	796484
Mode	P/E		Cable Type	RG174	Reflector	HOLE
Damping	500 OHMS		Cable Length	15'	Amplitude/Sweep	20%/1.2

Axial Scan Calibration				Circ. Scan Calibration			
Cal. Refl.	Signal Amp.	Sweep Div.	Wmax	Cal. Refl.	Signal Amp.	Sweep Div.	Wmax
1T	80	2.0	1.20	1T	80	2.1	1.30
2T	40	4.0	2.30	2T	40	4.2	2.60
3T	20	6.0	3.50				
4T	15	8.0	4.60				

Calibration Remarks:
NONE

Comp. Temp.: 62 °F Configuration: TEE TO PIPE Wo Location WELD CL Lo Location TDC

Scan Dir.	Results NI	NRI	RI	Ind. No.	% DAC	Length L1	Lmax	L2	Reference Measurement W1	Wmax	W2	Sweep Position S1	Smax	S2	Thickness 1"<–	C/L	–>1"	Notes:
2	●			N/A														
7	●			N/A														
8	●			N/A														

Examination/Limitation Remarks: (1) REFERENCE S00F1U107 FOR 5 SCAN (APR-4).
(2) MS-R119 (WS) LIMITS 2 SCAN IN 2 PLACES FROM CL TO 1.5" FOR A TOTAL OF 28" OF 113.25".

Total Length of Weld	Crown Width	Total Length of Weld Examined	Extent of Perpendicular Scans (W)	Extent of Parallel Scans (L)
113.25	1.6"	5 (L) (1) 2 (L) (2) 7 & 8 (W) NL	5 - from (1) to (1) 2 - from (2) to (2)	From (5) NL to (2) NL

Primary Examiner	Level	Assistant Examiner	Level	Non-Technical Review	Date
JOSEPH D. FUNYAK J D Funyak	II	N/A	N/A	Danny D. Robbins	3-22-00

SNC NDE Level II/III Review	Date	Percentage of Code Coverage	ANII Review	Date
Danny Cordes L III	3-24-00	N/A %	C G Wamel	3/28/00

Figure 1

Revision 7

FIGURE C-1

NDE INDICATION EVALUATION REPORT
Farley Nuclear Plant

_3_ 10 Year Interval _1_ 40 Month Period _2_ Outage Unit 1 / IER No. **008** Date **3/27/00**

PART I FINDINGS

Sketch Ref: See attached NDE Method: VT-2 Procedure/Rev. FNP-0-NDE.100.22/Rev 2
Item No. N/A

Component Inspected: Class 1 Bolted Connections / See attached sheet.

Description of Indication See attached sheet for description of indication for each component.

Prepared By Charles W. Dean Date 3/27/2000

PART II SNC NDE INSPECTOR ASSESSMENT

Code References: Examination performed per Examination Category B-P, system leakage test (IWB-5221), VT-2, and RR-27, ASME Section XI, 1989 Edition.

Evaluation: VT-2 examinations are unacceptable per IWA-5250(a)(2).

Bases: For systems that are borated for the purpose of controlling reactivity, insulation shall be removed from pressure retaining bolted connections for visual examination, VT-2. FNP RR-27 allows the insulated bolted connections to be uninsulated and VT-2 examined once each refueling outage while the connections are at atmospheric or static pressure. Based on ASME Section XI, 1989 Edition, paragraph IWA-5241(a) and IWA-5242(a), the boron residue (leakage) requires corrective action.

Review of Previous Examinations: Q1E11V051C, Q1E21V0077A, Q1B13V0003, Q1E21V0367, Q1E21V0077B and Q1E21V0077C showed evidence of leakage (boron build-up) during 1R15. During 1R15 these 6 valves had their bonnets removed, flanges and bolting in contact with boric acid build-up VT-3 examined, and gaskets replaced.

NDE Inspector J. Eric Alycock Certification Level III Date 5-18-00

FIGURE C-1

PART III SNC EVALUATION AND DISPOSITION

Cause of Indication: Leakage of borated water from bolted connections.

Action Required to Correct Indication: Per IWA-5250(a)(2), if leakage occurs at a bolted connection, the bolting shall be removed, VT-3 visually examined for corrosion and evaluated in accordance with IWA-3100.

MSR Number: See attached sheet.

LER Yes____ No X **10CFR 21** Yes____ No X

Corrective Action Taken: Work orders were written for examination of these bolted connections that showed evidence of leakage. The valve bonnets were removed, valves and flange surfaces were cleaned, and bolting in contact with boron build-up was removed and VT-3 examined. Flow orifice 2886A was disassembled, cleaned and inspected. All bolting examinations were satisfactory. Gaskets were replaced.

Corrective Action Initiated to Prevent Recurrence: Bolted connections were disassembled, cleaned, bolts VT-3 examined, and gaskets replaced. Bolts were tightened to their proper torque values.

Prepared By J. Eric Aycock Date 5-18-00

Approved By Daniel Hartline Date 5/22/00

ANII REVIEW: CG Wa[illegible] 5/22/00

FIGURE C-1

IER No. 008
FNP UNIT 1 REFUELING OUTAGE 1R16
VALVE BOLTING

TPNS Number	Work Order	Item Description	VT-2 Result
Q1E11V051C	20001774	SI to RCS Loop 3 Cold Leg Check Valve	Light dry boron build-up on valve gasket area.
Q1E21V0367	20001826	Letdown Control Valve	Moderate dry boron build-up on valve gasket area.
Q1E21V0077C	20001838	SI to RCS Loop 3 Hot Leg Check Valve	Light dry boron build-up on gasket and bolting
Q1E21V0077A	20001938	SI to RCS Loop 1 Hot Leg Check Valve	Light dry boron build-up on basket and bolting.
Q1E21V0246	20001943	Excess Letdown Isolation Valve	Heavy dry boron build-up on gasket, bolting, and valve body.
Q1E21V077B	20001946	SI to RCS Loop 2 Hot Leg Check Valve	Light dry boron build-up on valve gasket area
Q1E11FO2886A	20001656	SI to RCS Loop 3 Cold Leg Flow Orifice Bolted Connection	Heavy dry boron build-up on gasket and bolting.
Q1E21V038A	20001669	"A" Accumulator to RCS Cold Leg Loop 1 Isolation Valve	Light dry boron build-up on gasket area
Q1E11V044	20001706	SI to RCS Not Legs Isolation Valve	Moderate dry boron build-up on gasket area
Q1B13V003	20002011	RCS Loop 1 to Normal Letdown Isolation Valve	Light dry boron build-up on gasket, bolting, and valve body.

FIGURE 1

VISUAL EXAMINATION RECORD - VT2

FARLEY NUCLEAR PLANT

SOUTHERN NUCLEAR OPERATING COMPANY

Plant/Unit FARLEY / 1		Data Package TPNS Q1E21V051C	Drawing Number D-351115 SHT 1
(WO)/WA No. 99008125		SystemBoundaries	
Procedure No.FNP-0-NDE-100.22			
Revision No. 2		RCS COLD LEG LOOP 1 SAFETY INJECTION	
Examiner Scott R. Erickson	Level II	CHECK VALVE BODY TO BONNET JOINT.	
Examiner N/A	Level N/A		
Date (Month-Day-Year) 3-8-00			
SKETCH		N A	
Examination (Per Para. 7.5) ____ Sat ✓ *Unsat			
*Provide details on unsat areas SEE FIGURE 2 - PAGE 2 OF 2			
Comments REF. RR-27			

FIGURE 2

VISUAL EXAMINATION SUPPLEMENTAL DATA SHEET

FARLEY NUCLEAR PLANT

SOUTHERN NUCLEAR OPERATING COMPANY

Plant/Unit	Line Number/Examination Area/Weld No.	Drawing Number	
FARLEY 1	Q1E21V051C	D-351115 SHT 1	

WO/WA No. 99008125	Date (Month-Day-Year)	Examiner	Level	Location
Procedure No. FNP-0-NDE-100.22				
Revision No. 2	3-8-00	Scott R. Erickson	II	CTMT LOOP 1 126' EL.

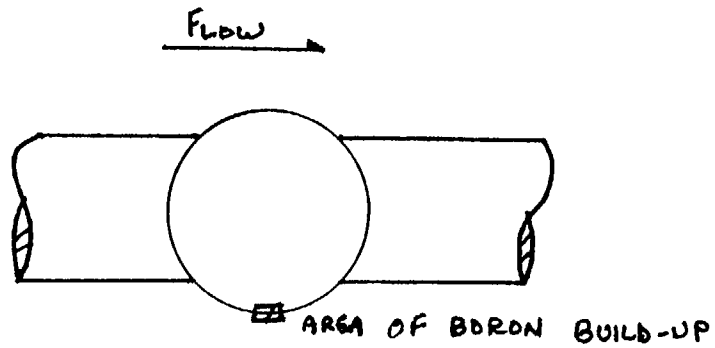

Comments: LIGHT DRY BORON BUILD-UP ON GASKET AREA.

Page 2 of 2

FIGURE 1

VISUAL EXAMINATION RECORD - VT2

FARLEY NUCLEAR PLANT

SOUTHERN NUCLEAR OPERATING COMPANY

Plant/Unit FARLEY /1	Data Package TPNS Q1E21V367	Drawing Number D-351116 SHT. 1
(WO)WA No. 99008133	SystemBoundaries	
Procedure No.FNP-0-NDE-100.22		
Revision No. 2	RCS COLD LEG LOOP 1 TO LETDOWN ISOLATION	
Examiner Scott R. Erichson / Level II	VALVE BODY TO BONNET JOINT.	
Examiner N/A / Level N/A		
Date (Month-Day-Year) 3-9-00		
SKETCH	N A	

Examination (Per Para. 7.5) _____ Sat ✓ *Unsat

*Provide details on unsat areas SEE FIGURE 2 - PAGE 2 OF 2

Comments REF. RR-27

FIGURE 2

VISUAL EXAMINATION SUPPLEMENTAL DATA SHEET

FARLEY NUCLEAR PLANT

SOUTHERN NUCLEAR OPERATING COMPANY

Plant/Unit	Line Number/Examination Area/Weld No.	Drawing Number	
FARLEY /1	Q1E21V367	D-351116 SHT. 1	

WO/WA No. 99008133	Date (Month-Day-Year)	Examiner	Level	Location
Procedure No. FNP-0-NDE-100.22				
Revision No. 2	3-9-00	Scott R. Erichson	II	CTMT REG. HX 106' EL.

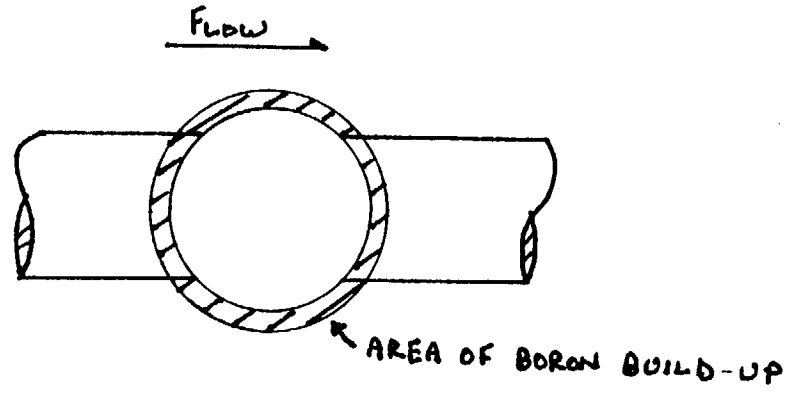

Comments: MODERATE DRY BORON BUILD-UP ON GASKET

Page 2 of 2

SHARED

FIGURE 1

VISUAL EXAMINATION RECORD - VT2

FARLEY NUCLEAR PLANT

SOUTHERN NUCLEAR OPERATING COMPANY

Plant/Unit FARLEY / 1	Data Package TPNS Q1E21V077C
WO/WA No. 99008141	Drawing Number D-351115 SHT. 1
Procedure No. FNP-0-NDE-100.22	SystemBoundaries
Revision No. 2	SAFETY INJECTION TO LOOP 3 HOT LEG
Examiner Scott R. Erichson — Level II	CHECK VALVE BODY TO BONNET JOINT.
Examiner N/A — Level N/A	
Date (Month-Day-Year) 3-10-00	
SKETCH	N/A

Examination (Per Para. 7.5)

____ Sat ✓ *Unsat

*Provide details on unsat areas SEE FIGURE 2 PAGE 2 OF 2

Comments REF. RR-27

FIGURE 2

VISUAL EXAMINATION SUPPLEMENTAL DATA SHEET

FARLEY NUCLEAR PLANT

SOUTHERN NUCLEAR OPERATING COMPANY

Plant/Unit	Line Number/Examination Area/Weld No.	Drawing Number	
FARLEY / 1	Q1E21V077C	D-351115 SHT. 1	

WO/WA No. 99008141	Date (Month-Day-Year)	Examiner	Level	Location
Procedure No. FNP-0-NDE-100.22				
Revision No. 2	3-10-00	Scott R. Erickson	II	CTMT LOOP 3 ELEV. 126'

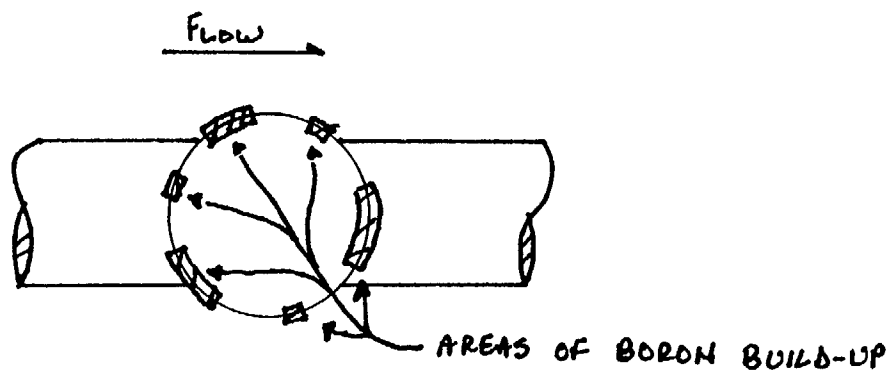

Comments: LIGHT DRY BORON BUILD-UP ON BASKET AREA AND BOLTING.

Page 2 of 2

FIGURE 1

VISUAL EXAMINATION RECORD - VT2

FARLEY NUCLEAR PLANT

SOUTHERN NUCLEAR OPERATING COMPANY

Plant/Unit FARLEY /1		Data Package TPNS Q1E21V077A	Drawing Number D-351115 SHT. 1
(WO)WA No. 99008127		SystemBoundaries	
Procedure No.FNP-0-NDE-100.22			
Revision No. 2		RCS HOT LEG LOOP 1 SAFETY INJECTION	
Examiner Scott R. Erickson	Level II	CHECK VALVE BODY TO BONNET JOINT.	
Examiner N/A	Level N/A		
Date (Month-Day-Year) 3-7-00			
SKETCH		N/A	

Examination (Per Para. 7.5) ____ Sat ✓ *Unsat

*Provide details on unsat areas SEE FIGURE 2 - PAGE 2 OF 2

Comments REF. RR-27

FIGURE 2

VISUAL EXAMINATION SUPPLEMENTAL DATA SHEET

FARLEY NUCLEAR PLANT

SOUTHERN NUCLEAR OPERATING COMPANY

Plant/Unit	Line Number/Examination Area/Weld No.	Drawing Number	
FARLEY 1/1	Q1E21V077A	D-351115 SHT. 1	

WO/WA No. 99008127	Date (Month-Day-Year)	Examiner	Level	Location
Procedure No. FNP-0-NDE-100.22				
Revision No. 2	3-7-00	Scott R. Erickson	II	CTMT LOOP 1 126' EL.

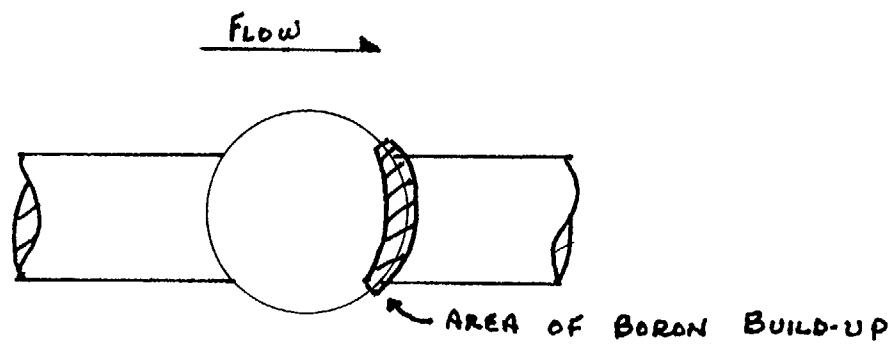

Comments: LIGHT DRY BORON BUILD-UP ON GASKET AREA AND VALVE BOLTING.

Page 2 of 2

FIGURE 1

VISUAL EXAMINATION RECORD - VT2

FARLEY NUCLEAR PLANT

SOUTHERN NUCLEAR OPERATING COMPANY

Plant/Unit FARLEY /1	Data Package TPNS 01E21V246	Drawing Number D-351116 SHT. 1
(WO)/WA No. 99008150	SystemBoundaries	
Procedure No.FNP-0-NDE-100.22		
Revision No. 2	RCS LOOP 3 TO EXCESS LETDOWN HEAT	
Examiner Scott R. Erichson / Level II	EXCHANGER BODY TO BONNET JOINT.	
Examiner N/A / Level N/A		
Date (Month-Day-Year) 3-7-00		
SKETCH	N/A	

Examination (Per Para. 7.5) _____ Sat ✓ *Unsat

*Provide details on unsat areas SEE FIGURE 2 - SHEET 2 OF 2

Comments REF. RR-27

FIGURE 2

VISUAL EXAMINATION SUPPLEMENTAL DATA SHEET

FARLEY NUCLEAR PLANT

SOUTHERN NUCLEAR OPERATING COMPANY

Plant/Unit	Line Number/Examination Area/Weld No.	Drawing Number	
FARLEY /1	Q1E21V246	D-351116 SHT. 1	

WO/WA No. 9900 8150	Date (Month-Day-Year)	Examiner	Level	Location
Procedure No. FNP-0-NDE-100.22				
Revision No. 2	3-7-00	Scott R. Erichson	II	CTMT LOOP 3 107'EL.

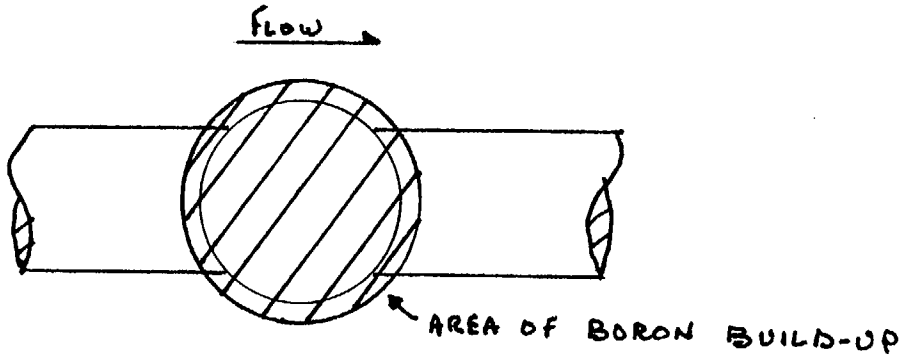

Comments: HEAVY DRY BORON BUILD-UP ON GASKET AREA AND BOLTING AND VALVE BODY

Page 2 of 2

FIGURE 1

VISUAL EXAMINATION RECORD - VT2

FARLEY NUCLEAR PLANT

SOUTHERN NUCLEAR OPERATING COMPANY

Plant/Unit FARLEY /1		Data Package TPNS Q1E21V077B	Drawing Number D-351115 SHT. 1
(WO)/WA No. 99008135		SystemBoundaries	
Procedure No.FNP-0-NDE-100.22			
Revision No. 2		LOOP 2 HOT LEG SAFETY INJECTION	
Examiner Scott R. Erickson	Level II	CHECK VALVE BODY TO BONNET JOINT.	
Examiner N/A	Level N/A		
Date (Month-Day-Year) 3-13-00			
SKETCH		N/A	

Examination (Per Para. 7.5) _____ Sat ✓ *Unsat

*Provide details on unsat areas SEE FIGURE 2 - PAGE 2 OF 2

Comments REF. RR-27

FIGURE 2

VISUAL EXAMINATION SUPPLEMENTAL DATA SHEET

FARLEY NUCLEAR PLANT

SOUTHERN NUCLEAR OPERATING COMPANY

Plant/Unit	Line Number/Examination Area/Weld No.	Drawing Number	
FARLEY 1	Q1E21V077B	D-351115 SHT. 1	

WO/WA No. 99008135	Date (Month-Day-Year)	Examiner	Level	Location
Procedure No. FNP-0-NDE-100.22				
Revision No. 2	3-13-00	Scott R. Erichson	II	CTMT LOOP 2 126' EL.

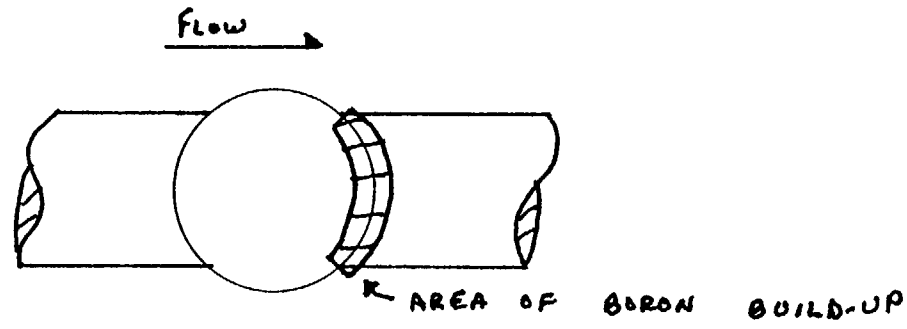

Comments: LIGHT DRY BORON BUILD-UP ON GASKET AREA.

Page 2 of 2

FIGURE 1

VISUAL EXAMINATION RECORD - VT2

FARLEY NUCLEAR PLANT

SOUTHERN NUCLEAR OPERATING COMPANY

Plant/Unit FARLEY /1		Data Package TPNS Q1E21F02BB6A	Drawing Number D-351115 SHT. 1
WO/WA No. W00600211		SystemBoundaries	
Procedure No.FNP-0-NDE-100.22			
Revision No. 2		SAFETY INJECTION TO RCS LOOP 3 COLD	
Examiner Scott R. Erickson	Level II	LEG FLOW ORIFICE BOLTED CONNECTION.	
Examiner N/A	Level N/A		
Date (Month-Day-Year) 3-4-00			
SKETCH		N A	

Examination (Per Para. 7.5)

_____ Sat ✓ *Unsat

*Provide details on unsat areas SEE FIGURE 2 - PAGE 2 OF 2

Comments REF. RR-27

FIGURE 2

VISUAL EXAMINATION SUPPLEMENTAL DATA SHEET

FARLEY NUCLEAR PLANT

SOUTHERN NUCLEAR OPERATING COMPANY

Plant/Unit	Line Number/Examination Area/Weld No.	Drawing Number	
FARLEY 1	Q1E21FO2886A	D-351115 SHT. 1	

WO/WA No. W006002 11	Date (Month-Day-Year)	Examiner	Level	Location
Procedure No. FNP-0-NDE-100.22				
Revision No. 2	3-4-00	Scott R. Erichson	II	CTMT OMB 114' EL.

FLOW

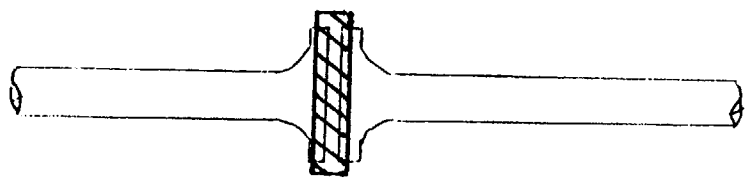

Comments: HEAVY DRY BORON ~~BUILD~~ SRE 3-10-99 BUILD-UP ON GASKET AND BOLTING.

Page 2 of 2

FIGURE 1

VISUAL EXAMINATION RECORD - VT2

FARLEY NUCLEAR PLANT

SOUTHERN NUCLEAR OPERATING COMPANY

Plant/Unit FARLEY / 1	Data Package TPNS Q1E21V038A	Drawing Number D-351115 SHT. 2
WO/WA No. W00600211	SystemBoundaries	
Procedure No.FNP-0-NDE-100.22		
Revision No. 2	'A' ACCUMULATOR TO RCS COLD LEG LOOP 1	
Examiner Scott R. Erickson / Level II	ISOLATION VALVE BODY TO BONNET JOINT.	
Examiner N/A / Level N/A		
Date (Month-Day-Year) 3-4-00		
SKETCH	N/A	

Examination (Per Para. 7.5) _____ Sat ✓ *Unsat

*Provide details on unsat areas SEE FIGURE 2 - PAGE 2 OF 2

Comments REF. RR-27

FIGURE 2

VISUAL EXAMINATION SUPPLEMENTAL DATA SHEET

FARLEY NUCLEAR PLANT

SOUTHERN NUCLEAR OPERATING COMPANY

Plant/Unit	Line Number/Examination Area/Weld No.	Drawing Number	
FARLEY /1	Q1E21V038A	D-351115 SHT. 2	

WO/WA No. W00600211	Date (Month-Day-Year)	Examiner	Level	Location
Procedure No. FNP-0-NDE-100.22				
Revision No. 2	3-4-00	Scott R. Erickson	II	CTMT OMB 107' EL.

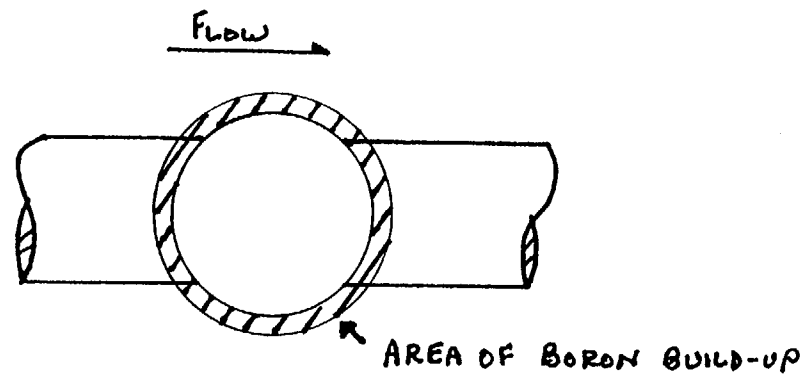

Comments: LIGHT DRY BORON BUILD-UP ON GASKET AREA.

Page 2 of 2

FIGURE 1

VISUAL EXAMINATION RECORD - VT2

FARLEY NUCLEAR PLANT

SOUTHERN NUCLEAR OPERATING COMPANY

Plant/Unit FARLEY /1		Data Package TPNS 01E11V044	Drawing Number D-351115 SHT.2
WO/WA No. W006000211		SystemBoundaries	
Procedure No.FNP-0-NDE-100.22			
Revision No. 2		SAFETY INJECTION TO RCS HOT LEGS	
Examiner [signature]	Level II	ISOLATION VALVE BODY TO BONNET JOINT.	
Examiner N/A	Level N/A		
Date (Month-Day-Year) 3-9-00			
SKETCH		N A	

Examination (Per Para. 7.5)

_____ Sat ✓ *Unsat

*Provide details on unsat areas SEE FIGURE 2 - PAGE 2 OF 2

Comments REF. RR-27

FIGURE 2

VISUAL EXAMINATION SUPPLEMENTAL DATA SHEET

FARLEY NUCLEAR PLANT

SOUTHERN NUCLEAR OPERATING COMPANY

Plant/Unit	Line Number/Examination Area/Weld No.		Drawing Number	
FARLEY /1	Q1E11 V044		D-351115 SHT:2	
WO/WA No. W00600211	Date (Month-Day-Year)	Examiner	Level	Location
Procedure No. FNP-0-NDE-100.22				
Revision No. 2	3-9-00	[illegible]	II	AB 121'EL. RM 223

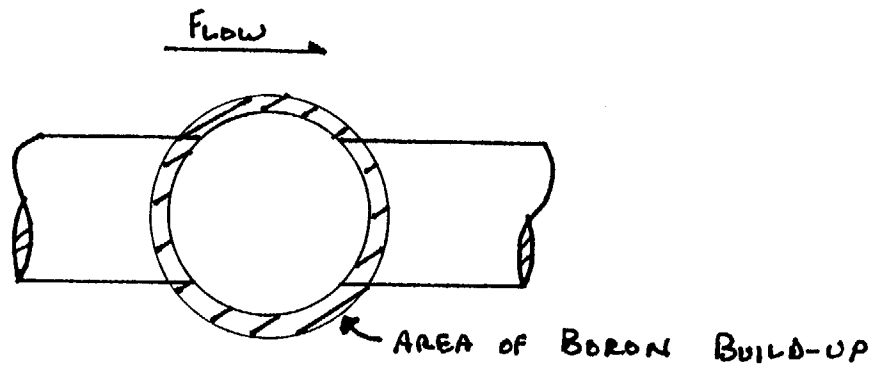

Comments: MODERATE DRY BORON BUILD-UP ON GASKET AREA.

Page 2 of 2

FIGURE 1

VISUAL EXAMINATION RECORD - VT2

FARLEY NUCLEAR PLANT

SOUTHERN NUCLEAR OPERATING COMPANY

Plant/Unit FARLEY / 1	Data Package TPN5 Q1B13V003	Drawing Number D-351114 SHT. 1
WO/WA No. 99008131	SystemBoundaries	
Procedure No.FNP-0-NDE-100.22		
Revision No. 2	CVCS NORMAL LETDOWN VALVE BODY TO	
Examiner Scott R. Erickson / Level II	BONNET JOINT.	
Examiner N/A / Level N/A		
Date (Month-Day-Year) 3-7-00		
SKETCH	N A	

Examination (Per Para. 7.5) _____ Sat ✓ *Unsat

*Provide details on unsat areas SEE FIGURE 2 - PAGE 2 OF 2

Comments REF. RR-27

FIGURE 2

VISUAL EXAMINATION SUPPLEMENTAL DATA SHEET

FARLEY NUCLEAR PLANT

SOUTHERN NUCLEAR OPERATING COMPANY

Plant/Unit	Line Number/Examination Area/Weld No.	Drawing Number	
FARLEY / 1	Q1B13 V003	D-351114 SHT. 1	

WO/WA No. 99008131	Date (Month-Day-Year)	Examiner	Level	Location
Procedure No. FNP-0-NDE-100.22				
Revision No. 2	3-7-00	Scott R. Erickson	II	CTMT LOOP 1 106' EL.

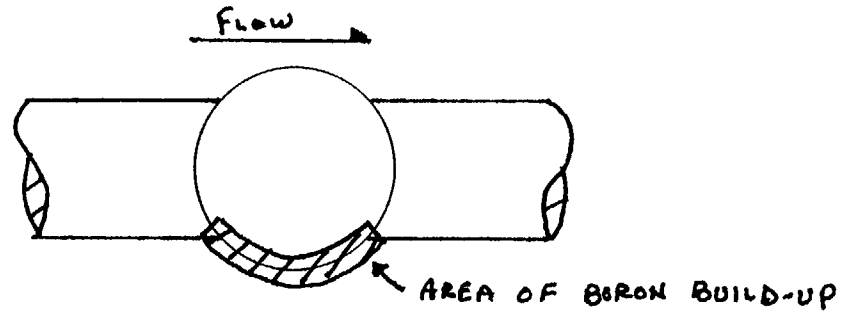

Comments: LIGHT DRY BORON BUILD-UP ON GASKET AREA AND BOLTING AND VALVE BODY

Page 2 of 2

SHARED

FIGURE 1

VISUAL EXAMINATION RECORED VT-1

FARLEY NUCLEAR PLANT

SOUTHERN NUCLEAR OPERATING COMPANY

Plant/Unit	Line Number/Examination Area/Weld No.	Drawing Number	Sheet No.
FARLEY /	Q1E11V051C	N/A	

Photos	Sketch	Resolution	Technique
___ Yes ___ B&W	___ Yes	✓ 1/32" Division (Scale)	✓ Direct
✓ No ___ Color	✓ No	___ 1/32" Line (Gray Card)	___ Video
			___ Remote

WO/WA	20001774
Procedure No.	FNP-0-NDE-100.21
Revision No.	1
Examiner/Initial Sig	SCOTT R. ERICKSON Scott R. Erickson
Level	II
Examiner/Initial Sig.	N/A
Level	
Date (Month-Day-Year)	03-21-00

Equipment	Lighting	Tools		
✓ Mirror	___ Ambient	✓ Scale	___ Depth Gauge	___ Level
___ Magnifier	✓ Flashlight	___ Micrometer	___ Comparator	___
___ CCTV	___ Droplight	___ Caliper	___ Weld Gauge	___

N/A **WELDS & BASE MATERIAL VT-1**

	SAT	UN-SAT	N/A
Ground Blend Material	___	___	___
Undercut	___	___	___
Corrosion build-Up	___	___	___
Gouges	___	___	___
Evidence of Leakage	___	___	___
Arc Strikes	___	___	___
Cracks	___	___	___
Other **	___	___	___

* Provide details on unsat areas by use of supplemental data sheet.

** Provide details on other areas examined

✓ **BOLTS, STUDS, AND WASHERS VT-1**

	SAT	UN-SAT	N/A
Loose Members	___	___	✓
Cracks	✓	___	___
Corrosion	✓	___	___
Gouges	✓ *	___	___
Thread Damage	✓	___	___
Deformation	✓	___	___
Protective Coating	✓	___	___
Evidence of Leakage	___	___	✓
Other**	___	___	✓

* MINOR TOOL MARKS ON NUT SRE 3-21-00

Comments EXAMINED (1) STUD AFTER REMOVAL FOR INSPECTION. NO VISIBLE WASTAGE OF CROSS SECTIONAL AREA OR THREAD SURFACES NOTED AT THE TIME OF EXAM

FIGURE 1

SUPPORT EXAMINATION RECORD VT-3

FARLEY NUCLEAR PLANT

SOUTHERN NUCLEAR OPERATING COMPANY

Plant/Unit	Line Number/Examination Area/Weld No.	Drawing Number	Sheet No.
FARLEY /	Q1E11V051C	N/A	

Photos	Sketch	Resolution	Technique
___ Yes ___ B&W	___ Yes	✓ 1/32" Division (Scale)	✓ Direct
✓ No ___ Color	✓ No	___ 1/32" Line (Gray Card)	___ Video
			___ Remote

WO/WA	20001774
Procedure No.	FNP-0-NDE-100.23
Revision No.	3
Examiner/Initial Sig.	SCOTT R. ERICKSON / Scott R. Erickson
Level	II
Examiner/Initial Sig.	N/A
Level	
Date (Month-Day-Year)	03-21-00

Equipment	Lighting	Tools		
✓ Mirror	___ Ambient	✓ Scale	___ Depth Gauge	___ Level
___ Magnifier	✓ Flashlight	___ Micrometer	___ Comparator	___
___ CCTV	___ Droplight	___ Caliper	___ Weld Gauge	___

N/A SNUBBERS VT-3	SAT	UN-SAT	N/A
Loose Bolt or Pin Connections	___	___	___
Shaft Seal	___	___	___
Fluid Leakage	___	___	___
Fluid Tubing Condition	___	___	___
Shaft Cleanliness	___	___	___
Spherical Bearings	___	___	___
Cotter & Clevis Pins Intact	___	___	___
Other**	___	___	___

* Provide details on unsat areas by use of supplemental data sheet.

** Provide details on other areas examined.

✓ COMP. INTERNALS & MAT'L SURFACE VT-3	SAT	UN-SAT	N/A
Pitting	✓	___	___
Corrosion	✓	___	___
Erosion	✓	___	___
Foreign Material	✓	___	___
Gouged Parts	✓*	___	___
Wear	✓	___	___
Evidence of Leakage	___	___	✓
Other Cracks**	___	___	✓

* MINOR TOOL MARKS ON NUT SRE 3-21-00

N/A HANGER & SUPPORTS VT-3	SAT	UN-SAT	N/A
Setting:	___	___	___
Hot ___ Cold ___	___	___	___
Misalignment	___	___	___
Damaged Members	___	___	___
Gouges	___	___	___
Arc Strikes	___	___	___
Grind Marks	___	___	___
Freedom of Movement	___	___	___
Other**	___	___	___

Comments EXAMINED (1) STUD AFTER REMOVAL FOR INSPECTION. NO VISIBLE WASTAGE OF CROSS SECTIONAL AREA OR THREAD SURFACES AT THE TIME OF THE EXAM.

FIGURE 1

VISUAL EXAMINATION RECORED VT-1

FARLEY NUCLEAR PLANT

SOUTHERN NUCLEAR OPERATING COMPANY

Plant/Unit	Line Number/Examination Area/Weld No.	Drawing Number	Sheet No.
FARLEY / 1	Q1E21V367	N/A	

Photos	Sketch	Resolution	Technique
___ Yes ___ B&W	___ Yes	✓ 1/32" Division (Scale)	✓ Direct
✓ No ___ Color	✓ No	___ 1/32" Line (Gray Card)	___ Video
			___ Remote

WO/WA 20001826

Procedure No. FNP-0-NDE-100.21

Revision No. 1

Examiner/Initial Sig. SCOTT R. ERICKSON Scott R. Erickson — Level II

Examiner/Initial Sig. N/A — Level N/A

Date (Month-Day-Year) 3-22-00

Equipment	Lighting	Tools		
✓ Mirror	___ Ambient	✓ Scale	___ Depth Gauge	___ Level
___ Magnifier	✓ Flashlight	___ Micrometer	___ Comparator	___
___ CCTV	___ Droplight	___ Caliper	___ Weld Gauge	___

N/A WELDS & BASE MATERIAL VT-1	SAT	UN-SAT	N/A
Ground Blend Material	___	___	___
Undercut	___	___	___
Corrosion build-Up	___	___	___
Gouges	___	___	___
Evidence of Leakage	___	___	___
Arc Strikes	___	___	___
Cracks	___	___	___
Other **	___	___	

* Provide details on unsat areas by use of supplemental data sheet.

** Provide details on other areas examined

✓ BOLTS, STUDS, AND WASHERS VT-1	SAT	UN-SAT	N/A
Loose Members	___	___	✓
Cracks	✓	___	___
Corrosion	✓	___	___
Gouges	✓	___	___
Thread Damage	✓	___	___
Deformation	✓	___	___
Protective Coating	✓	___	___
Evidence of Leakage	___	___	✓
Other**	___	___	✓

Comments EXAMINED (1) STUD AFTER REMOVAL FROM VALVE BODY. EXAMINED (5) STUDS IN PLACE. NO VISIBLE WASTAGE OF CROSS SECTIONAL AREA OR THREADED SURFACES NOTED. SPE 3-22-00

SHARED

FIGURE 1

SUPPORT EXAMINATION RECORD VT-3

FARLEY NUCLEAR PLANT

SOUTHERN NUCLEAR OPERATING COMPANY

Plant/Unit	Line Number/Examination Area/Weld No.	Drawing Number	Sheet No.
FARLEY 1	Q1E21V367	N/A	

Photos	Sketch	Resolution	Technique
___ Yes ___ B&W	___ Yes	✓ 1/32" Division (Scale)	✓ Direct
✓ No ___ Color	✓ No	___ 1/32" Line (Gray Card)	___ Video
			___ Remote

WO/WA	20001826
Procedure No.	FNP-0-NDE-100.23
Revision No.	3
Examiner/Initial Sig.	SCOTT R. ERICKSON / Scott R. Erickson — Level II
Examiner/Initial Sig.	N/A — Level N/A
Date (Month-Day-Year)	3-22-00

Equipment	Lighting	Tools		
✓ Mirror	___ Ambient	✓ Scale	___ Depth Gauge	___ Level
___ Magnifier	✓ Flashlight	___ Micrometer	___ Comparator	___
___ CCTV	___ Droplight	___ Caliper	___ Weld Gauge	___

N/A SNUBBERS VT-3	SAT	UN-SAT	N/A
Loose Bolt or Pin Connections	___	___	___
Shaft Seal	___	___	___
Fluid Leakage	___	___	___
Fluid Tubing Condition	___	___	___
Shaft Cleanliness	___	___	___
Spherical Bearings	___	___	___
Cotter & Clevis Pins Intact	___	___	___
Other**	___	___	___

* Provide details on unsat areas by use of supplemental data sheet.

** Provide details on other areas examined.

✓ COMP. INTERNALS & MAT'L SURFACE VT-3	SAT	UN-SAT	N/A
Pitting	✓	___	___
Corrosion	✓	___	___
Erosion	✓	___	___
Foreign Material	✓	___	___
Gouged Parts	✓	___	___
Wear	✓	___	___
Evidence of Leakage	✓	___	___
Other Cracks**	___	___	✓

N/A HANGER & SUPPORTS VT-3	SAT	UN-SAT	N/A
Setting:	___	___	___
Hot ___ Cold ___	___	___	___
Misalignment	___	___	___
Damaged Members	___	___	___
Gouges	___	___	___
Arc Strikes	___	___	___
Grind Marks	___	___	___
Freedom of Movement	___	___	___
Other**	___	___	___

Comments EXAMINED FLANGE, GASKET SEATING AREA AND (5) BOLTS IN PLACE - SAT. EXAMINED (1) BOLT AFTER REMOVAL FROM VALVE BODY - SAT. NO VISIBLE WASTAGE OF CROSS SECTIONAL AREA OR THREADED SURFACES. NOTED. SRE 3-22-00

FIGURE 1

SUPPORT EXAMINATION RECORD VT-3

FARLEY NUCLEAR PLANT

SOUTHERN NUCLEAR OPERATING COMPANY

Plant/Unit	Line Number/Examination Area/Weld No.	Drawing Number	Sheet No.
FARLEY/1	Q1E21V077C	N/A	

Photos	Sketch	Resolution	Technique
___ Yes ___ B&W	___ Yes	✓ 1/32" Division (Scale)	✓ Direct
✓ No ___ Color	✓ No	___ 1/32" Line (Gray Card)	___ Video
			___ Remote

WO/WA	20001838
Procedure No.	FNP-0-NDE-100.23
Revision No.	3
Examiner/Initial Sig.	M. GRELL Manfd Grell — Level II
Examiner/Initial Sig.	N/A — Level
Date (Month-Day-Year)	3-29-00

Equipment	Lighting	Tools		
✓ Mirror	___ Ambient	✓ Scale	___ Depth Gauge	___ Level
___ Magnifier	✓ Flashlight	___ Micrometer	___ Comparator	___
___ CCTV	___ Droplight	___ Caliper	___ Weld Gauge	___

N/A SNUBBERS VT-3	SAT	UN-SAT	N/A
Loose Bolt or Pin Connections			
Shaft Seal			
Fluid Leakage			
Fluid Tubing Condition			
Shaft Cleanliness			
Spherical Bearings			
Cotter & Clevis Pins Intact			
Other**			

* Provide details on unsat areas by use of supplemental data sheet.

** Provide details on other areas examined.

✓ COMP. INTERNALS & MAT'L SURFACE VT-3	SAT	UN-SAT	N/A
Pitting	✓		
Corrosion	✓		
Erosion	* ✓		
Foreign Material	✓		
Gouged Parts	* ✓		
Wear	✓		
Evidence of Leakage	✓		
Other Cracks**			✓

examined (1) STUD WHEN REMOVED FROM VALVE BODY. REMAINING STUDS examined inplace.

N/A HANGER & SUPPORTS VT-3	SAT	UN-SAT	N/A
Setting:			
Hot ___ Cold ___			
Misalignment			
Damaged Members			
Gouges			
Arc Strikes			
Grind Marks			
Freedom of Movement			
Other**			

Comments examined studs & nuts along with gasket Seating Surfaces. No abnormalities noted @ time of exam.
* minor surface corrosion & tool marks noted on studs and Nuts

SHARED

FIGURE 1

VISUAL EXAMINATION RECORED VT-1

FARLEY NUCLEAR PLANT

SOUTHERN NUCLEAR OPERATING COMPANY

Plant/Unit	Line Number/Examination Area/Weld No.	Drawing Number	Sheet No.
FARLEY / 1	Q1E21V077C	N/A	

Photos	Sketch	Resolution	Technique
___ Yes ___ B&W	___ Yes	✓ 1/32" Division (Scale)	✓ Direct
✓ No ___ Color	✓ No	___ 1/32" Line (Gray Card)	___ Video
			___ Remote

WO/WA	20001838
Procedure No.	FNP-0-NDE-100.21
Revision No.	1
Examiner/Initial Sig.	M. GREEN / Manfred Green
Level	II
Examiner/Initial Sig.	N/A
Level	
Date (Month-Day-Year)	3-29-00

Equipment	Lighting	Tools		
✓ Mirror	___ Ambient	✓ Scale	___ Depth Gauge	___ Level
___ Magnifier	✓ Flashlight	___ Micrometer	___ Comparator	___
___ CCTV	___ Droplight	___ Caliper	___ Weld Gauge	___

N/A WELDS & BASE MATERIAL VT-1	SAT	UN-SAT	N/A
Ground Blend Material	___	___	___
Undercut	___	___	___
Corrosion build-Up	___	___	___
Gouges	___	___	___
Evidence of Leakage	___	___	___
Arc Strikes	___	___	___
Cracks	___	___	___
Other **	___	___	___

* Provide details on unsat areas by use of supplemental data sheet.

** Provide details on other areas examined

✓ BOLTS, STUDS, AND WASHERS VT-1	SAT	UN-SAT	N/A
Loose Members	___	___	✓
Cracks	✓	___	___
Corrosion	* ✓	___	___
Gouges	✓	___	___
Thread Damage	* ✓	___	___
Deformation	✓	___	___
Protective Coating	✓	___	___
Evidence of Leakage	✓	___	___
Other**	___	___	✓

* minor surface corrosion & tool-marks noted on Studs & Nuts

Comments: no visible wastage of cross sectional area or threaded surfaces noted @ time of exam. examined 1 STUD after removal from valve body, remaining studs examined I/P MG 3-29-00

SHARED

FIGURE 1

SUPPORT EXAMINATION RECORD VT-3

FARLEY NUCLEAR PLANT

SOUTHERN NUCLEAR OPERATING COMPANY

Plant/Unit	Line Number/Examination Area/Weld No.	Drawing Number	Sheet No.
Farley 1	Q1E21V077A	N/A	

Photos	Sketch	Resolution	Technique
___ Yes ___ B&W	___ Yes	✓ 1/32" Division (Scale)	✓ Direct
✓ No ___ Color	✓ No	___ 1/32" Line (Gray Card)	___ Video
			___ Remote

WO/WA	20001938
Procedure No.	FNP-0-NDE-10023
Revision No.	3
Examiner/Initial Sig.	M. GRELL Manfred Grell — Level II
Examiner/Initial Sig.	N/A — Level
Date (Month-Day-Year)	4.3.00

Equipment	Lighting	Tools		
✓ Mirror	___ Ambient	✓ Scale	___ Depth Gauge	___ Level
___ Magnifier	✓ Flashlight	___ Micrometer	___ Comparator	___
___ CCTV	___ Droplight	___ Caliper	___ Weld Gauge	___

N/A SNUBBERS VT-3	SAT	UN-SAT	N/A
Loose Bolt or Pin Connections	___	___	___
Shaft Seal	___	___	___
Fluid Leakage	___	___	___
Fluid Tubing Condition	___	___	___
Shaft Cleanliness	___	___	___
Spherical Bearings	___	___	___
Cotter & Clevis Pins Intact	___	___	___
Other**	___	___	___

* Provide details on unsat areas by use of supplemental data sheet.

** Provide details on other areas examined.

✓ COMP. INTERNALS & MAT'L SURFACE VT-3	SAT	UN-SAT	N/A
Pitting	✓	___	___
Corrosion	✓	___	___
Erosion	✓	___	___
Foreign Material	✓	___	___
Gouged Parts	✓	___	___
Wear	✓	___	___
Evidence of Leakage	✓	___	___
Other Cracks**	___	___	✓

examined 1 stud removed, remaining 1/P

N/A HANGER & SUPPORTS VT-3	SAT	UN-SAT	N/A
Setting:	___	___	___
Hot ___ Cold ___	___	___	___
Misalignment	___	___	___
Damaged Members	___	___	___
Gouges	___	___	___
Arc Strikes	___	___	___
Grind Marks	___	___	___
Freedom of Movement	___	___	___
Other**	___	___	___

Comments examined studs and gasket mating surfaces, no anomalies noted @ time of exam MG 4.3.00

SHARED

FIGURE 1

VISUAL EXAMINATION RECORED VT-1

FARLEY NUCLEAR PLANT

SOUTHERN NUCLEAR OPERATING COMPANY

Plant/Unit	Line Number/Examination Area/Weld No.	Drawing Number	Sheet No.
FARLEY 1	Q1E21V077A	N/A	

Photos	Sketch	Resolution	Technique
___ Yes ___ B&W	___ Yes	✓ 1/32" Division (Scale)	✓ Direct
✓ No ___ Color	✓ No	___ 1/32" Line (Gray Card)	___ Video
			___ Remote

WO/WA	20001938
Procedure No.	FNP-0-NDE-100.21
Revision No.	1
Examiner/Initial Sig.	M. GRELL Maurd Grell — Level II
Examiner/Initial Sig.	N/A — Level
Date (Month-Day-Year)	4-3-00

Equipment	Lighting	Tools		
✓ Mirror	___ Ambient	✓ Scale	___ Depth Gauge	___ Level
___ Magnifier	✓ Flashlight	___ Micrometer	___ Comparator	
___ CCTV	___ Droplight	___ Caliper	___ Weld Gauge	

N/A **WELDS & BASE MATERIAL VT-1**

	SAT	UN-SAT	N/A
Ground Blend Material	___	___	___
Undercut	___	___	___
Corrosion build-Up	___	___	___
Gouges	___	___	___
Evidence of Leakage	___	___	___
Arc Strikes	___	___	___
Cracks	___	___	___
Other **	___	___	___

* Provide details on unsat areas by use of supplemental data sheet.

** Provide details on other areas examined

✓ **BOLTS, STUDS, AND WASHERS VT-1**

	SAT	UN-SAT	N/A
Loose Members	✓	___	___
Cracks	✓	___	___
Corrosion	✓	___	___
Gouges	✓	___	___
Thread Damage	✓	___	___
Deformation	✓	___	___
Protective Coating	✓	___	___
Evidence of Leakage	✓	___	___
Other**	___	___	✓

examined 1 STUD after removal from Valve Body, remaining I/P

Comments no visible wastage of cross sectional area or threaded surfaces noted @ time of exam MM 4-3-00

FIGURE 1

SUPPORT EXAMINATION RECORD VT-3

FARLEY NUCLEAR PLANT

SOUTHERN NUCLEAR OPERATING COMPANY

Plant/Unit	Line Number/Examination Area/Weld No.	Drawing Number	Sheet No.
FARLEY 1	Q1E21V246	N/A	

Photos	Sketch	Resolution	Technique
___ Yes ___ B&W	___ Yes	✓ 1/32" Division (Scale)	✓ Direct
✓ No ___ Color	✓ No	___ 1/32" Line (Gray Card)	___ Video
			___ Remote

WO/WA 20001943	
Procedure No. FNP-0-NDE-100.23	
Revision No. 3	
Examiner/Initial Sig. SCOTT R. ERICKSON Scott R. Erickson	Level II
Examiner/Initial Sig. N/A	Level N/A
Date (Month-Day-Year) 3-27-00	

Equipment	Lighting	Tools		
✓ Mirror	___ Ambient	✓ Scale	___ Depth Gauge	___ Level
___ Magnifier	✓ Flashlight	___ Micrometer	___ Comparator	___
___ CCTV	___ Droplight	___ Caliper	___ Weld Gauge	___

N/A SNUBBERS VT-3	SAT	UN-SAT	N/A
Loose Bolt or Pin Connections	___	___	___
Shaft Seal	___	___	___
Fluid Leakage	___	___	___
Fluid Tubing Condition	___	___	___
Shaft Cleanliness	___	___	___
Spherical Bearings	___	___	___
Cotter & Clevis Pins Intact	___	___	___
Other**	___	___	___

* Provide details on unsat areas by use of supplemental data sheet.

** Provide details on other areas examined.

✓ COMP. INTERNALS & MAT'L SURFACE VT-3	SAT	UN-SAT	N/A
Pitting	✓	___	___
Corrosion	✓	___	___
Erosion	✓	___	___
Foreign Material	✓	___	___
Gouged Parts	✓	___	___
Wear	✓	___	___
Evidence of Leakage	✓	___	___
Other Cracks**	___	___	✓

N/A HANGER & SUPPORTS VT-3	SAT	UN-SAT	N/A
Setting:	___	___	___
Hot ___ Cold ___	___	___	___
Misalignment	___	___	___
Damaged Members	___	___	___
Gouges	___	___	___
Arc Strikes	___	___	___
Grind Marks	___	___	___
Freedom of Movement	___	___	___
Other**	___	___	___

Comments EXAMINED FLANGE, GASKET SEATING AREA, (5) STUDS IN PLACE, (1) STUD AFTER REMOVAL FROM VALVE BODY. NO VISIBLE WASTAGE OF CROSS SECTIONAL AREA OR THREADED SURFACES NOTED AT TIME OF EXAM. SRE 3-27-

SHARED

FIGURE 1

VISUAL EXAMINATION RECORED VT-1

FARLEY NUCLEAR PLANT

SOUTHERN NUCLEAR OPERATING COMPANY

Plant/Unit	Line Number/Examination Area/Weld No.	Drawing Number	Sheet No.
FARLEY /1	Q1E21V246	N/A	

Photos	Sketch	Resolution	Technique
___ Yes ___ B&W	___ Yes	✓ 1/32" Division (Scale)	✓ Direct
✓ No ___ Color	✓ No	___ 1/32" Line (Gray Card)	___ Video
			___ Remote

WO/WA 20001943
Procedure No. FNP-0-NDE-100.21
Revision No. 1
Examiner/Initial SCOTT R. ERICKSON
Sig. Scott R. Erickson
Level II
Examiner/Initial
Sig. N/A
Level N/A
Date (Month-Day-Year) 3-27-00

Equipment	Lighting	Tools		
✓ Mirror	___ Ambient	✓ Scale	___ Depth Gauge	___ Level
___ Magnifier	✓ Flashlight	___ Micrometer	___ Comparator	___
___ CCTV	___ Droplight	___ Caliper	___ Weld Gauge	___

N/A **WELDS & BASE MATERIAL VT-1**

	SAT	UN-SAT	N/A
Ground Blend Material	___	___	___
Undercut	___	___	___
Corrosion build-Up	___	___	___
Gouges	___	___	___
Evidence of Leakage	___	___	___
Arc Strikes	___	___	___
Cracks	___	___	___
Other **	___	___	___

* Provide details on unsat areas by use of supplemental data sheet.

** Provide details on other areas examined

✓ **BOLTS, STUDS, AND WASHERS VT-1**

	SAT	UN-SAT	N/A
Loose Members	___	___	✓
Cracks	✓	___	___
Corrosion	✓	___	___
Gouges	✓	___	___
Thread Damage	✓	___	___
Deformation	✓	___	___
Protective Coating	✓	___	___
Evidence of Leakage	___	___	✓
Other**	___	___	✓

Comments EXAMINED (5) STUDS IN PLACE, (1) STUD AFTER REMOVAL FROM VALVE BODY. NO VISIBLE WASTAGE OF CROSS SECTIONAL AREA OR THREADED SURFACES NOTED AT TIME OF EXAM. SRE 3-27-00

FIGURE 1

SUPPORT EXAMINATION RECORD VT-3

FARLEY NUCLEAR PLANT

SOUTHERN NUCLEAR OPERATING COMPANY

Plant/Unit	Line Number/Examination Area/Weld No.	Drawing Number	Sheet No.
FARLEY/1	Q1E21V077B	N/A	

Photos	Sketch	Resolution	Technique
___ Yes ___ B&W	___ Yes	✓ 1/32" Division (Scale)	✓ Direct
✓ No ___ Color	✓ No	___ 1/32" Line (Gray Card)	___ Video
			___ Remote

WO/WA	20001946
Procedure No.	FNP-0-NDE-100.23
Revision No.	3
Examiner/Initial Sig.	M. GRELL Manfd Grell — Level II
Examiner/Initial Sig.	N/A — Level
Date (Month-Day-Year)	4/3/00

Equipment	Lighting	Tools		
✓ Mirror	___ Ambient	✓ Scale	___ Depth Gauge	___ Level
___ Magnifier	✓ Flashlight	___ Micrometer	___ Comparator	___
___ CCTV	___ Droplight	___ Caliper	___ Weld Gauge	___

N/A SNUBBERS VT-3	SAT	UN-SAT	N/A
Loose Bolt or Pin Connections	___	___	___
Shaft Seal	___	___	___
Fluid Leakage	___	___	___
Fluid Tubing Condition	___	___	___
Shaft Cleanliness	___	___	___
Spherical Bearings	___	___	___
Cotter & Clevis Pins Intact	___	___	___
Other**	___	___	___

* Provide details on unsat areas by use of supplemental data sheet.

** Provide details on other areas examined.

✓ COMP. INTERNALS & MAT'L SURFACE VT-3	SAT	UN-SAT	N/A
Pitting	✓	___	___
Corrosion	✓	___	___
Erosion	✓	___	___
Foreign Material	✓	___	___
Gouged Parts	✓	___	___
Wear	✓	___	___
Evidence of Leakage	✓	___	___
Other Cracks**	___	___	✓

Examined 12 studs total. 9 1/P and 3 removed from Valve body.

N/A HANGER & SUPPORTS VT-3	SAT	UN-SAT	N/A
Setting:	___	___	___
Hot ___ Cold ___	___	___	___
Misalignment	___	___	___
Damaged Members	___	___	___
Gouges	___	___	___
Arc Strikes	___	___	___
Grind Marks	___	___	___
Freedom of Movement	___	___	___
Other**	___	___	___

Comments Examined 12 STUDS - 12 NUTS and valve & bonnet Gasket surfaces. no abnormalities noted @ Time of exam. MG 4-3-00

SHARED

FIGURE 1

VISUAL EXAMINATION RECORED VT-1

FARLEY NUCLEAR PLANT

SOUTHERN NUCLEAR OPERATING COMPANY

Plant/Unit	Line Number/Examination Area/Weld No.	Drawing Number	Sheet No.
FARLEY / 1	Q1E21V077B	N/A	

Photos	Sketch	Resolution	Technique
___ Yes ___ B&W	___ Yes	✓ 1/32" Division (Scale)	✓ Direct
✓ No ___ Color	✓ No	___ 1/32" Line (Gray Card)	___ Video
			___ Remote

WO/WA	20001946
Procedure No.	FNP-0-NDE-100.21
Revision No.	1
Examiner/Initial Sig.	M.GRELL Manfred Grell
Level	II
Examiner/Initial Sig.	
Level	
Date (Month-Day-Year)	4-3-00

Equipment	Lighting	Tools		
✓ Mirror	___ Ambient	✓ Scale	___ Depth Gauge	___ Level
___ Magnifier	✓ Flashlight	___ Micrometer	___ Comparator	
___ CCTV	___ Droplight	___ Caliper	___ Weld Gauge	

N/A WELDS & BASE MATERIAL VT-1	SAT	UN-SAT	N/A
Ground Blend Material	___	___	___
Undercut	___	___	___
Corrosion build-Up	___	___	___
Gouges	___	___	___
Evidence of Leakage	___	___	___
Arc Strikes	___	___	___
Cracks	___	___	___
Other **	___	___	___

* Provide details on unsat areas by use of supplemental data sheet.

** Provide details on other areas examined

✓ BOLTS, STUDS, AND WASHERS VT-1	SAT	UN-SAT	N/A
Loose Members	✓	___	___
Cracks	✓	___	___
Corrosion	✓	___	___
Gouges	✓	___	___
Thread Damage	✓	___	___
Deformation	✓	___	___
Protective Coating	✓	___	___
Evidence of Leakage	✓	___	___
Other**	___	___	✓

Examined 3 STUDS Removed from Valvebody 9 studs I/P

Comments No Visible Wastage of cross sectional area or threaded surfaces noted @ time of exam MWD 4/3/00

SHARED

FIGURE 1

SUPPORT EXAMINATION RECORD VT-3

FARLEY NUCLEAR PLANT

SOUTHERN NUCLEAR OPERATING COMPANY

Plant/Unit	Line Number/Examination Area/Weld No.	Drawing Number	Sheet No.
FARLEY UNIT 1	N1E11F02886A	N/A	

Photos	Sketch	Resolution	Technique
___ Yes ___ B&W	___ Yes	✓ 1/32" Division (Scale)	✓ Direct
✓ No ___ Color	✓ No	___ 1/32" Line (Gray Card)	___ Video
			___ Remote

WO/WA	20001570
Procedure No.	FNP-O-NDE-100.23
Revision No.	3
Examiner/Initial Sig.	M.GRELL Mark Grell — Level II
Examiner/Initial Sig.	N/A — Level
Date (Month-Day-Year)	3/26/00

Equipment	Lighting	Tools		
✓ Mirror	___ Ambient	✓ Scale	___ Depth Gauge	___ Level
___ Magnifier	✓ Flashlight	___ Micrometer	___ Comparator	
___ CCTV	___ Droplight	___ Caliper	___ Weld Gauge	

N/A SNUBBERS VT-3	SAT	UN-SAT	N/A
Loose Bolt or Pin Connections			
Shaft Seal			
Fluid Leakage			
Fluid Tubing Condition			
Shaft Cleanliness			
Spherical Bearings			
Cotter & Clevis Pins Intact			
Other**			

* Provide details on unsat areas by use of supplemental data sheet.

** Provide details on other areas examined.

✓ COMP. INTERNALS & MAT'L SURFACE VT-3	SAT	UN-SAT	N/A
Pitting	✓		
Corrosion	✓*		
Erosion	✓		
Foreign Material	✓		
Gouged Parts	✓		
Wear	✓†		
Evidence of Leakage	✓		
Other Cracks**			✓

*all studs & NUT had minor surface corrosion and tool marks MW 3-26-00

N/A HANGER & SUPPORTS VT-3	SAT	UN-SAT	N/A
Setting:			
Hot ___ Cold ___			
Misalignment			
Damaged Members			
Gouges			
Arc Strikes			
Grind Marks			
Freedom of Movement			
Other**			

Comments examined all studs and nut after disassembly - examined all Gasket seating surfaces. no abnormalities noted @ time of exam. MW 3-26-00

SHARED

FIGURE 1

VISUAL EXAMINATION RECORED VT-1

FARLEY NUCLEAR PLANT

SOUTHERN NUCLEAR OPERATING COMPANY

Plant/Unit	Line Number/Examination Area/Weld No.	Drawing Number	Sheet No.
FARLEY 1	N1E11 FO 2886A	N/A	

Photos	Sketch	Resolution	Technique
___ Yes ___ B&W	___ Yes	✓ 1/32" Division (Scale)	✓ Direct
✓ No ___ Color	✓ No	___ 1/32" Line (Gray Card)	___ Video
			___ Remote

WO/WA	20001570
Procedure No.	FNP-0-NDE-100.21
Revision No.	1
Examiner/Initial Sig.	M. GRELL Maurd Grell
Level	II
Examiner/Initial Sig.	N/A
Level	
Date (Month-Day-Year)	3.26.00

Equipment	Lighting	Tools		
✓ Mirror	___ Ambient	✓ Scale	___ Depth Gauge	___ Level
___ Magnifier	✓ Flashlight	___ Micrometer	___ Comparator	___
___ CCTV	___ Droplight	___ Caliper	___ Weld Gauge	___

N/A WELDS & BASE MATERIAL VT-1	SAT	UN-SAT	N/A
Ground Blend Material	___	___	___
Undercut	___	___	___
Corrosion build-Up	___	___	___
Gouges	___	___	___
Evidence of Leakage	___	___	___
Arc Strikes	___	___	___
Cracks	___	___	___
Other **	___	___	___

* Provide details on unsat areas by use of supplemental data sheet.

** Provide details on other areas examined

✓ BOLTS, STUDS, AND WASHERS VT-1	SAT	UN-SAT	N/A
Loose Members	___	___	✓
Cracks	✓	___	___
Corrosion	✓*	___	___
Gouges	✓	___	___
Thread Damage	✓*	___	___
Deformation	✓	___	___
Protective Coating	✓	___	___
Evidence of Leakage	✓	___	___
Other**	___	___	✓

* minor corrosion & tool marks noted on all studs & Nuts MJS 3-26-00

Examined Studs and Nuts after Flow orifice disassembled

Comments examined all studs and nuts after disassembly. No visible signs of wastage of cross sectional area or threaded surfaces noted @ time of exam. MJS 3-26-00

FIGURE 1

SUPPORT EXAMINATION RECORD VT-3

FARLEY NUCLEAR PLANT

SOUTHERN NUCLEAR OPERATING COMPANY

Plant/Unit	Line Number/Examination Area/Weld No.	Drawing Number	Sheet No.
FARLEY / 1	Q1E21V038A	N/A	

Photos	Sketch	Resolution	Technique
___ Yes ___ B&W	___ Yes	✓ 1/32" Division (Scale)	✓ Direct
✓ No ___ Color	✓ No	___ 1/32" Line (Gray Card)	___ Video
			___ Remote

WO/WA	20001669
Procedure No.	FNP-0-NDE-100.23
Revision No.	3
Examiner/Initial Sig.	M. GRELL Manfred Grell
Level	II
Examiner/Initial Sig.	N/A
Level	
Date (Month-Day-Year)	3-22-00

Equipment	Lighting	Tools		
✓ Mirror	___ Ambient	✓ Scale	___ Depth Gauge	___ Level
___ Magnifier	✓ Flashlight	___ Micrometer	___ Comparator	___
___ CCTV	___ Droplight	___ Caliper	___ Weld Gauge	___

N/A SNUBBERS VT-3	SAT	UN-SAT	N/A
Loose Bolt or Pin Connections	___	___	___
Shaft Seal	___	___	___
Fluid Leakage	___	___	___
Fluid Tubing Condition	___	___	___
Shaft Cleanliness	___	___	___
Spherical Bearings	___	___	___
Cotter & Clevis Pins Intact	___	___	___
Other**	___	___	___

* Provide details on unsat areas by use of supplemental data sheet.

** Provide details on other areas examined.

✓ COMP. INTERNALS & MAT'L SURFACE VT-3	SAT	UN-SAT	N/A
Pitting	✓	___	___
Corrosion	✓	___	___
Erosion	✓	___	___
Foreign Material	✓	___	___
Gouged Parts	✓	___	___
Wear	✓	___	___
Evidence of Leakage	___	___	✓
Other Cracks**	___	___	✓

N/A HANGER & SUPPORTS VT-3	SAT	UN-SAT	N/A
Setting:	___	___	___
Hot ___ Cold ___	___	___	___
Misalignment	___	___	___
Damaged Members	___	___	___
Gouges	___	___	___
Arc Strikes	___	___	___
Grind Marks	___	___	___
Freedom of Movement	___	___	___
Other**	___	___	___

Comments Examined (1) STUD after removal from Valve body. STUD & ASSOCIATED NUT had only minor Tool marks. Valve not disassembled no further Visuals performed MB 3-22-00

SHARED

FIGURE 1

VISUAL EXAMINATION RECORED VT-1

FARLEY NUCLEAR PLANT

SOUTHERN NUCLEAR OPERATING COMPANY

Plant/Unit	Line Number/Examination Area/Weld No.	Drawing Number	Sheet No.
FARLEY / 1	Q 1E21N038A	N/A	

Photos	Sketch	Resolution	Technique
___ Yes ___ B&W	___ Yes	✓ 1/32" Division (Scale)	✓ Direct
✓ No ___ Color	✓ No	___ 1/32" Line (Gray Card)	___ Video
			___ Remote

WO/WA	2000 1669
Procedure No.	FNP-0-NDE-100.21
Revision No.	1
Examiner/Initial Sig.	M. GRELL Maurice Grell
Level	II
Examiner/Initial Sig.	N/A
Level	
Date (Month-Day-Year)	3-22-00

Equipment	Lighting	Tools		
✓ Mirror	___ Ambient	✓ Scale	___ Depth Gauge	___ Level
___ Magnifier	✓ Flashlight	___ Micrometer	___ Comparator	___
___ CCTV	___ Droplight	___ Caliper	___ Weld Gauge	___

N/A WELDS & BASE MATERIAL VT-1	SAT	UN-SAT	N/A
Ground Blend Material	___	___	___
Undercut	___	___	___
Corrosion build-Up	___	___	___
Gouges	___	___	___
Evidence of Leakage	___	___	___
Arc Strikes	___	___	___
Cracks	___	___	___
Other **	___	___	___

* Provide details on unsat areas by use of supplemental data sheet.

** Provide details on other areas examined

✓ BOLTS, STUDS, AND WASHERS VT-1	SAT	UN-SAT	N/A
Loose Members	___	___	✓
Cracks	✓	___	___
Corrosion	✓	___	___
Gouges	✓	___	___
Thread Damage	✓	___	___
Deformation	✓	___	___
Protective Coating	✓	___	___
Evidence of Leakage	✓	___	___
Other**	___	___	✓

NUT & STUD had minor tool marks MG 3-22-00

Comments examined 1 STUD & NUT after removal from Valve Body. No Visible Wastage of Cross sectional area or threaded surfaces noted @ time of exam. MG 3-22-00

SHARED

FIGURE 1

SUPPORT EXAMINATION RECORD VT-3

FARLEY NUCLEAR PLANT

SOUTHERN NUCLEAR OPERATING COMPANY

Plant/Unit	Line Number/Examination Area/Weld No.	Drawing Number	Sheet No.
FARLEY 1	Q1E11V044	N/A	

Photos	Sketch	Resolution	Technique
___ Yes ___ B&W	___ Yes	✓ 1/32" Division (Scale)	✓ Direct
✓ No ___ Color	✓ No	___ 1/32" Line (Gray Card)	___ Video
			___ Remote

WO/WA	20001706
Procedure No.	FNP-0-NDE-100.23
Revision No.	3
Examiner/Initial Sig.	SCOTT R. ERICKSON / Scott R. Erickson — Level II
Examiner/Initial Sig.	N/A — Level N/A
Date (Month-Day-Year)	3-22-00

Equipment	Lighting	Tools		
✓ Mirror	___ Ambient	✓ Scale	___ Depth Gauge	___ Level
___ Magnifier	✓ Flashlight	___ Micrometer	___ Comparator	___
___ CCTV	___ Droplight	___ Caliper	___ Weld Gauge	___

N/A SNUBBERS VT-3	SAT	UN-SAT	N/A
Loose Bolt or Pin Connections	___	___	___
Shaft Seal	___	___	___
Fluid Leakage	___	___	___
Fluid Tubing Condition	___	___	___
Shaft Cleanliness	___	___	___
Spherical Bearings	___	___	___
Cotter & Clevis Pins Intact	___	___	___
Other**	___	___	___

* Provide details on unsat areas by use of supplemental data sheet.

** Provide details on other areas examined.

✓ COMP. INTERNALS & MAT'L SURFACE VT-3	SAT	UN-SAT	N/A
Pitting	✓	___	___
Corrosion	✓	___	___
Erosion	✓	___	___
Foreign Material	✓	___	___
Gouged Parts	✓	___	___
Wear	✓	___	___
Evidence of Leakage	✓	___	___
Other Cracks**	___	___	✓

N/A HANGER & SUPPORTS VT-3	SAT	UN-SAT	N/A
Setting:	___	___	___
Hot ___ Cold ___	___	___	___
Misalignment	___	___	___
Damaged Members	___	___	___
Gouges	___	___	___
Arc Strikes	___	___	___
Grind Marks	___	___	___
Freedom of Movement	___	___	___
Other**	___	___	___

Comments EXAMINED FLANGE, GASKET SEATING SURFACE AND (15) STUDS IN PLACE - SAT. EXAMINED (1) STUD AFTER REMOVAL FROM VALVE BODY - NO VISIBLE WASTAGE OF CROSS SECTIONAL AREA OR THREADED SURFACES NOTED. SRE 3.22.00

FIGURE 1

VISUAL EXAMINATION RECORED VT-1

FARLEY NUCLEAR PLANT

SOUTHERN NUCLEAR OPERATING COMPANY

Plant/Unit	Line Number/Examination Area/Weld No.	Drawing Number	Sheet No.
FARLEY 1	Q1E11V044	N/A	

Photos	Sketch	Resolution	Technique
___ Yes ___ B&W	___ Yes	✓ 1/32" Division (Scale)	✓ Direct
✓ No ___ Color	✓ No	___ 1/32" Line (Gray Card)	___ Video
			___ Remote

WO/WA 20001706
Procedure No. FNP-0-NDE-100.21
Revision No. 1
Examiner/Initial Sig. SCOTT R. ERICKSON Scott R. Erickson — Level II
Examiner/Initial Sig. N/A — Level N/A
Date (Month-Day-Year) 3-22-00

Equipment	Lighting	Tools		
✓ Mirror	___ Ambient	✓ Scale	___ Depth Gauge	___ Level
___ Magnifier	✓ Flashlight	___ Micrometer	___ Comparator	___
___ CCTV	___ Droplight	___ Caliper	___ Weld Gauge	___

N/A **WELDS & BASE MATERIAL VT-1**

	SAT	UN-SAT	N/A
Ground Blend Material	___	___	___
Undercut	___	___	___
Corrosion build-Up	___	___	___
Gouges	___	___	___
Evidence of Leakage	___	___	___
Arc Strikes	___	___	___
Cracks	___	___	___
Other **	___	___	

* Provide details on unsat areas by use of supplemental data sheet.
** Provide details on other areas examined

✓ **BOLTS, STUDS, AND WASHERS VT-1**

	SAT	UN-SAT	N/A
Loose Members	___	___	✓
Cracks	✓	___	___
Corrosion	✓	___	___
Gouges	✓	___	___
Thread Damage	✓	___	___
Deformation	✓	___	___
Protective Coating	✓	___	___
Evidence of Leakage	___	___	✓
Other**	___	___	✓

Comments EXAMINED (1) STUD AFTER REMOVAL FROM VALVE BODY. EXAMINED (15) STUDS IN PLACE. NO VISIBLE WASTAGE OF CROSS SECTIONAL AREA OR THREADED SURFACES NOTED. SEE 3-22-00

FIGURE 1

SUPPORT EXAMINATION RECORD VT-3

FARLEY NUCLEAR PLANT

SOUTHERN NUCLEAR OPERATING COMPANY

Plant/Unit	Line Number/Examination Area/Weld No.	Drawing Number	Sheet No.
FARLEY 1	Q1B13V003	N/A	

Photos	Sketch	Resolution	Technique
___ Yes ___ B&W	___ Yes	✓ 1/32" Division (Scale)	✓ Direct
✓ No ___ Color	✓ No	___ 1/32" Line (Gray Card)	___ Video
			___ Remote

WO/WA	20002011
Procedure No.	FNP-0-NDE-100.23
Revision No.	3
Examiner/Initial Sig.	Dave Alvalino — Level II
Examiner/Initial Sig.	N/A — Level
Date (Month-Day-Year)	04-20-00

Equipment	Lighting	Tools		
✓ Mirror	___ Ambient	✓ Scale	___ Depth Gauge	___ Level
___ Magnifier	✓ Flashlight	___ Micrometer	___ Comparator	
___ CCTV	___ Droplight	___ Caliper	___ Weld Gauge	

___ SNUBBERS VT-3	SAT	UN-SAT	N/A
Loose Bolt or Pin Connections	___	___	___
Shaft Seal	___	___	___
Fluid Leakage	___	___	___
Fluid Tubing Condition	___	___	___
Shaft Cleanliness	___	___	___
Spherical Bearings	___	___	___
Cotter & Clevis Pins Intact	___	___	___
Other**	___	___	___

* Provide details on unsat areas by use of supplemental data sheet.

** Provide details on other areas examined.

✓ COMP. INTERNALS & MAT'L SURFACE VT-3	SAT	UN-SAT	N/A
Pitting	✓	___	___
Corrosion	✓	___	___
Erosion	✓	___	___
Foreign Material	✓	___	___
Gouged Parts	* ✓	___	___
Wear	✓	___	___
Evidence of Leakage	___	___	✓
Other Cracks**	___	___	✓

✓ HANGER & SUPPORTS VT-3	SAT	UN-SAT	N/A
Setting:	___	___	___
Hot ___ Cold ___	___	___	___
Misalignment	___	___	___
Damaged Members	___	___	___
Gouges	___	___	___
Arc Strikes	___	___	___
Grind Marks	___	___	___
Freedom of Movement	___	___	___
Other**	___	___	___

Comments EXAMINED FLANGE AND GASKET SURFACES * MINOR DENT ON FLANGE 1/16" LONG OUTSIDE OF SEALING SURFACE AREA. DOES NOT AFFECT GASKET AREA. SAT DA 4-20-00

03/18/00 13:55:19

SHARED

FIGURE 1

VISUAL EXAMINATION RECORED VT-1

FNP-0-NDE-100.21
RTYPE: L1.09

FARLEY NUCLEAR PLANT

SOUTHERN NUCLEAR OPERATING COMPANY

Plant/Unit	Line Number/Examination Area/Weld No.	Drawing Number	Sheet No.
FARLEY /	Q1B13V003	N/A	

Photos	Sketch	Resolution	Technique
___ Yes ___ B&W	___ Yes	✓ 1/32" Division (Scale)	✓ Direct
✓ No ___ Color	✓ No	___ 1/32" Line (Gray Card)	___ Video
			___ Remote

WO/WA	20002011
Procedure No.	FNP-0-NDE-100.21
Revision No.	1
Examiner/Initial Sig.	[illegible]
Level	II
Examiner/Initial Sig.	N/A
Level	
Date (Month-Day-Year)	04-20-00

Equipment	Lighting	Tools		
✓ Mirror	___ Ambient	✓ Scale	___ Depth Gauge	___ Level
___ Magnifier	✓ Flashlight	___ Micrometer	___ Comparator	___
___ CCTV	___ Droplight	___ Caliper	___ Weld Gauge	___

___ WELDS & BASE MATERIAL VT-1	SAT	UN-SAT	N/A
Ground Blend Material	___	___	___
Undercut	___	___	___
Corrosion build-Up	___	___	___
Gouges	___	___	___
Evidence of Leakage	___	___	___
Arc Strikes	___	___	___
Cracks	___	___	___
Other **	___	___	

✓ BOLTS, STUDS, AND WASHERS VT-1	SAT	UN-SAT	N/A
Loose Members	___	___	✓
Cracks	✓	___	___
Corrosion	✓	___	___
Gouges	✓	___	___
Thread Damage	✓	___	___
Deformation	✓	___	___
Protective Coating	___	___	✓
Evidence of Leakage	___	___	✓
Other**	___	___	✓

* Provide details on unsat areas by use of supplemental data sheet.

** Provide details on other areas examined

Comments EXAMINED 5 STUDS REMOVED AND 7 STUDS IN PLACE ALSO 12 NUTS [illegible] 4-20-00

Revision 1

FIGURE C-1

NDE INDICATION EVALUATION REPORT
Farley Nuclear Plant

3 10 year Interval 1 40 Month Period 2 Outage Unit 1 / IER No. **009** Date **3/27/00**

PART I FINDINGS

Sketch Ref: **ALA2-4101** NDE Method: **UT** Procedure/Rev. **FNP-0-NDE-100.31 Rev. 7**
Item No. **2**
Component Inspected: **Pipe to Elbow (Main Steam)**
Description of Indication

During ultrasonic inspection of weld ALA2-4101-2 (Elbow to Pipe), a reflector was recorded per procedure with a peak amplitude of 50% DAC.

Prepared By **Danny Cordes SNC L/III** DRC Date **03/27/2000**

PART II SNC NDE INSPECTOR ASSESSMENT

Code References: **1989 ASME Section XI**

Evaluation: ID Geometry

Bases: **Evaluated as geometry per ASME Article III-4512.**

Typical ultrasonic ID reflector due to piping configuration (reference the ultrasonic data report S00F1U191).

0
Review of Previous Examinations: **Data compares with 1988 examination report. (IER 008)**

NDE Inspector **Danny Cordes** DRC Certification Level **III** Date **03/27/00**

FIGURE C-1

PART III SNC EVALUATION AND DISPOSITION

Cause of Indication: **Typical geometric reflector produced during fabrication and installation.**

Action Required to Correct Indication: **None Required**

None Required

MSR Number: **N/A**

LER Yes _____ No **X** 10CFR 21 Yes _____ No **X**

Corrective Action Taken:

None Required

Corrective Action Initiated to Prevent Recurrence:

None Required

Prepared By [signature] Date 3-28-00

Approved By [signature] Date 3/30/00

ANI REVIEW: [signature] 3/30/00

FIGURE C-1

NDE INDICATION EVALUATION REPORT
Farley Nuclear Plant

3 10 year Interval 1 40 Month Period 2 Outage Unit 1 / IER No. **010** Date **3/27/00**

PART I FINDINGS

Sketch Ref: **ALA2-4523** NDE Method: **PT** Procedure/Rev. **FNP-0-NDE-100.5 Rev. 6**
Item No. **Weld 5**
Component Inspected: **Elbow to Valve**
Description of Indication

During liquid penetrant examination of the elbow to valve weld, a 3/32" rounded indication was recorded, per procedure, located on the valve body.

Prepared By **Danny Cordes SNC L/III** DRC Date **03/27/00**

PART II SNC NDE INSPECTOR ASSESSMENT

Code References: **1989 ASME Section XI**

Evaluation: **ASME Code acceptable surface indications.**

Bases: **The acceptance standard for C5.21 (C-F-1) is Section XI paragraph IWC-3514, which is in course of preparation. The standards of IWB-3514 were applied.**

ASME Section XI does not address "rounded" surface indications. The indications are, therefore, classified as linear and evaluated per table IWB-3514-2. The indication is located on the valve body. The measured wall thickness for the adjoining line is 0.44" (ref ISI T&C report S00F1U149). Conservatively, the acceptable size for a wall thickness of 0.312" is 0.2". Therefore, the indication of 0.094" (3/32) is well within the acceptance range.

Review of Previous Examinations:

No previous record of surface indications for this weld.

NDE Inspector **Danny Cordes L/III** DRC Certification Level **III** Date **03/27/00**

FIGURE C-1

PART III SNC EVALUATION AND DISPOSITION

Cause of Indication: **Unknown. Although this type of surface for castings is common.**

Action Required to Correct Indication: **None Required**, Leave as is.

MSR Number: **N/A**

LER Yes _____ No **X** 10CFR 21 Yes _____ No **X**

Corrective Action Taken:

None Required

Corrective Action Initiated to Prevent Recurrence:

None Required

Prepared By [signature] Date 3-28-00

Approved By [signature] Date 3/30/00

ANII Review: CGWard 3/30/00

SHARED

FNP-0-NDE-100.5
PT-F-Form 001
Southern Nuclear Operating Company

Farley Nuclear Plant
Liquid Penetrant Examination Record

Unit	Component Number	Procedure/Rev./TCN	Sheet No.
1	ALA2-4523-5	FNP-0-NDE-100.5 / 6 / N/A	S00F1P029 Page 1 of 1

Thermometer

Mfg. / Ser. No. PTC / 38081
Cal. Due Date 8/27/2000
Surface Temp. 78 °F

Penetrant Materials

Manufacturer MAGNAFLUX

	Type	Batch
Cleaner/Remover	SKC-S	98A10K
Penetrant	SKL-SP	93D12K
Developer	SKD-S2	96J08K

Component Configuration: ELBOW TO VALVE

% of Length Coverage 100%
% of Area Coverage 100%

Date 3/22/00

Ind. No.	Results	Indication Desc. / Exam Limitations / etc.	Remarks
N/A	RI	3/32" ROUNDED .49" FROM TOE ON VALVE BODY @ 90°CW FROM TDC.	NONE

Remarks: ~~NONE~~ JRC 3-27-00 CODE ACCEPTABLE SURFACE INDICATION. SEE IER 1R16 010. JRC 3-27-00

Primary Examiner	ASNT Level	Initials	Assistant Examiner	ASNT Level	Initials	Non-Technical Review	Date
JOSEPH D. FUNYAK	II	JDF	N/A	N/A		[signature]	3-30-00

SNC NDE Level II/III Review	Date	Percentage of Code Coverage	ANII Review	Date
[signature] L III	3-24-00	100 %	[signature] 3/30/00	

Figure 1

SHARED

FARLEY NUCLEAR PLANT
Ultrasonic Calibration and Examination Record

FNP-0-NDE-100.31
Southern Nuclear Operating Company

Unit	Sketch/Component No.	Date	Sheet No.	
1	ALA2-4101-2	3/25/00	S00F1U191	Page 1 of 2

Procedure/Rev./TCN	Couplant/Batch No.	Thermometer SN/Cal Due Date	Linearity Sheet No.
FNP-0-NDE-100.31 / 7 / N/A	SONOTRACE 40 / 94243	38081 / 8/27/2000	S00F1L003

Instrument			Search Unit		Calibration Block	
Instrument	STAVELEY		Transducer Mfg.	KBA	Cal. Blk. No.	ALA-24
Serial No.	136-898K		Serial No.	009KTL	Thickness	1.20"
	Ax. dB	Circ. dB	Size	.50	Cal. Temp.	68°
Ref.	30	32	Frequency/Mode	2.25 / S	Cal. In	0845
Scan	42	44	"A" Dimension	0.5"	Cal. Chk.	0950
Reject	OFF		Nominal Angle	45	Cal. Out	1010
Frequency	2.25		Measured Angle	45	Ref. Blk. No.	796484
Mode	P/E		Cable Type	RG174	Reflector	HOLE
Damping	500 OHMS		Cable Length	12'	Amplitude/Sweep	20%/1.2

Axial Scan Calibration				Circ. Scan Calibration			
Cal. Refl.	Signal Amp.	Sweep Div.	Wmax	Cal. Refl.	Signal Amp.	Sweep Div.	Wmax
1T	80	2.0	1.19	1T	80	2.0	1.25
2T	40	4.0	2.30	2T	35	4.05	2.45
3T	30	6.0	3.45	3T	25	6.1	3.70
4T	15	8.0	4.70	4T	10	8.1	4.70

Calibration Remarks:
NONE

Comp. Temp.: 68° °F Configuration: PIPE TO ELBOW Wo Location WELD CL Lo Location TDC

Scan Dir.	Results NI	NRI	RI	Ind. No.	% DAC	Length L1	Lmax	L2	Reference Measurement W1	Wmax	W2	Sweep Position S1	Smax	S2	Thickness 1"<--	C/L	--->1"	Notes:
2			●	1	50%	(1)	0"	(1)		3.6"			2.7		1.55	1.3	1.3	(1) 360°
5	●			N/A														
7	●			N/A														
8	●			N/A														

Examination/Limitation Remarks: NONE

Total Length of Weld	Crown Width	Total Length of Weld Examined	Extent of Perpendicular Scans (W)	Extent of Parallel Scans (L)
101"	1.2"	5 (L) NL 2 (L) NL 7 & 8 (W) NL	5 - from NL to NL 2 - from NL to NL	From (5) NL to (2) NL

Primary Examiner	Level	Assistant Examiner	Level	Non-Technical Review	Date
GEORGE A. MORINI	II	N/A	N/A		3-28-00

SNC NDE Level II/III Review	Date	Percentage of Code Coverage	ANII Review	Date
	3-27-00	N/A %		3/30/00

Figure 1

Revision 7

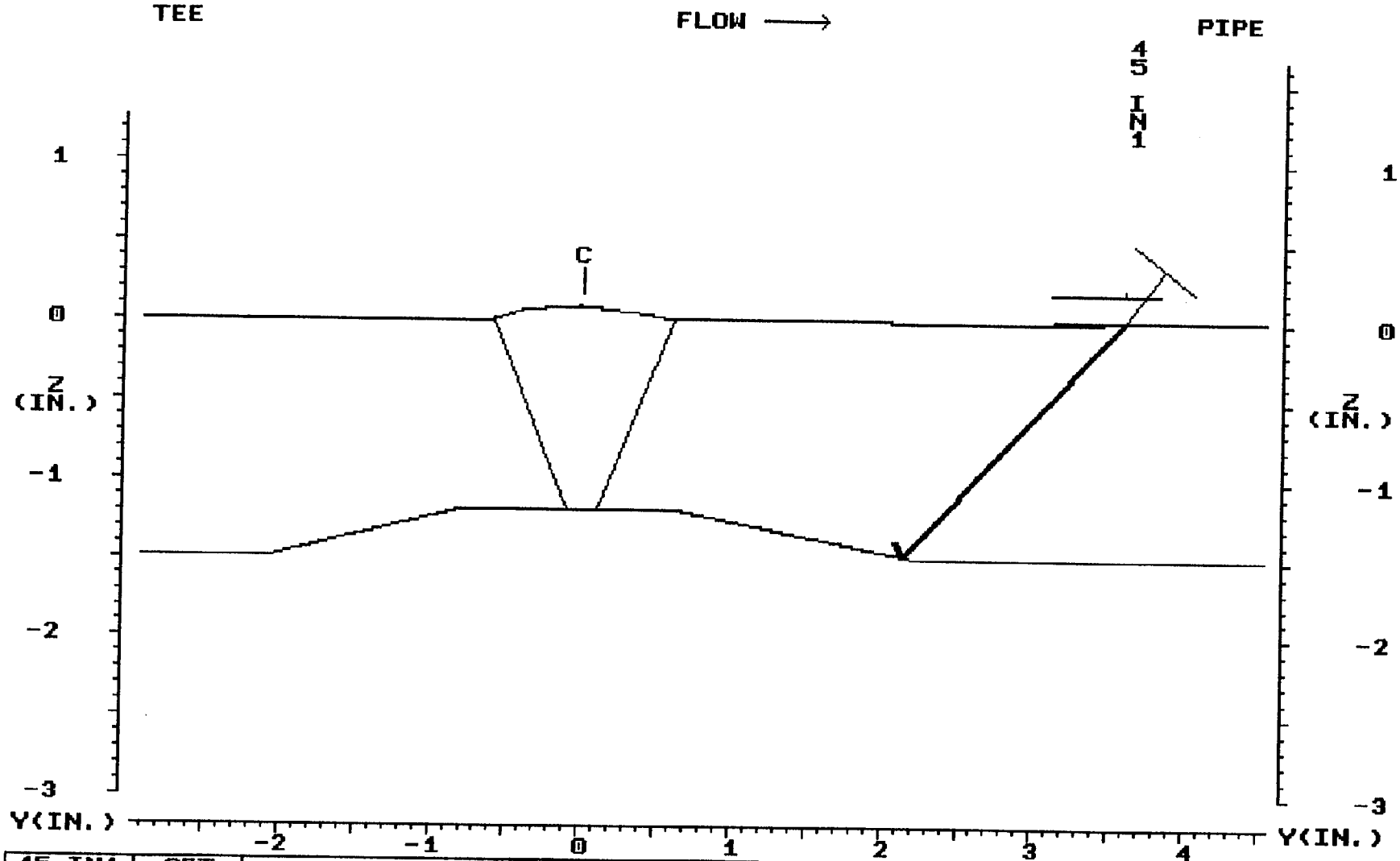

45 IN1	SET	1R16020.DAT 1R16020A.SCR							SET
1.56	DEP								DEP
2.20	MP	45 DEG INDICATION # 1 - ID GEOMETRY							MP
43.20	TOF								TOF
	ARC	COMPARES WITH 1988 DATA (SEE 1988 IER 008)							FAN
	GATE								GATE
0.050	STEP	DR CORDES L/III							STEP
	EXIT	MAKERAY	UTILITY	LEFT	RIGHT	TOP	PRINT	EXIT	EXIT

PLANT: FARLEY 1
SYSTEM: MAIN STEAM
COMPONENT: AL A2-4101-2

3/27/00
11:08

CIRC. POS.: TYP
ANALYST: DR CORDES L/III
CAL. SHEET: S00F1U191

2 of 2

FIGURE C-1

NDE INDICATION EVALUATION REPORT
Farley Nuclear Plant

_3_ 10 Year Interval _1_ 40 Month Period _2_ Outage Unit 1 / IER No. _011_ Date _3/28/00_

PART I FINDINGS

Sketch Ref: See attached NDE Method: VT-2 Procedure/Rev. FNP-0-NDE.100.22/Rev 2
Item No. N/A

Component Inspected: Class 2 Bolted Connections / See attached sheet.

Description of Indication See attached sheet for description of indication for each component.

Prepared By Charles W Dean Date 3/28/2000

PART II SNC NDE INSPECTOR ASSESSMENT

Code References: Examination performed per Examination Category C-H, system leakage test (IWC-5221), VT-2, ASME Section XI, 1989 Edition.

Evaluation: VT-2 examinations are unacceptable per IWA-5250(a)(2).

Bases: For systems that are borated for the purpose of controlling reactivity, insulation shall be removed from pressure retaining bolted connections for visual examination, VT-2. Based on ASME Section XI, 1989 Edition, paragraph IWA-5241(a) and IWA5242(a), the boron residue (leakage) requires corrective action.

Review of Previous Examinations: This is the first outage for Unit 1 where VT-2 examinations have been performed on these Class 2 Bolted Connections per the 1989 Section XI ASME Code.

NDE Inspector J. Eric Aycock Certification Level III Date 5-18-00
Darryl R. Griffin III 6-27-00

FIGURE C-1

PART III SNC EVALUATION AND DISPOSITION

Cause of Indication: Leakage of borated water from bolted connections.

Action Required to Correct Indication: Per IWA-5250(a)(2), if leakage occurs at a bolted connection, the bolting shall be removed, VT-3 visually examined for corrosion and evaluated in accordance with IWA-3100.

MSR Number: See attached sheet.

LER Yes____ No X **10CFR 21** Yes____ No X

Corrective Action Taken: Work orders were written for examination of these bolted connections that showed evidence of leakage. The valve bonnets were removed, valves and flange surfaces were cleaned, and bolting in contact with boron build-up was removed and VT-3 examined. Flow orifices and flow elements were disassembled, cleaned, and inspected. All bolting examinations were satisfactory. Gaskets were replaced.

Corrective Action Initiated to Prevent Recurrence: Bolted connections were disassembled, cleaned, bolts VT-3 examined, and gaskets replaced. Bolts were tightened to their proper torque values.

Prepared By J. Eric Alycock 6-27-00 Date 5-18-00

Approved By Daniel Hartline 6/28/00 Date 5/25/00

ANII REVIEW: 6/29/00

FIGURE C-1

IER No. 011
FNP UNIT 1 REFUELING OUTAGE 1R16
BOLTED CONNECTIONS

TPNS Number	Work Order	Item Description	VT-2 Result
Q1E21V257	20001405	Charging Pumps to Regen HX Isol Valve	Moderate dry boron build-up on gasket and bolting.
E21 Flange Set Btwn V325A & 324B	20001423	Flange in CVCS Charging Suction Piping	Light dry boron build-up on bolting and flange.
Q1E21V336B	20001427	React Water Storage Tank to Chg Pump Isol Valve	Light dry boron build-up on valve gasket.
Q1E21V182A	20001468	1A Charging Pump Suction	Light dry boron build-up on valve gasket.
N1E21F009A	20001477	1A Charging Pump Suction Strainer	Dry boron build-up on both flanges.
Q1E21V122C	20001482	1C Charging Pump Disch Check Valve	Light dry boron build-up on gasket and bolting.
Q1E21V123C	20001483	1C Charging Pump Discharge	Light dry boron build-up on gasket
Q1E21V116C	20001485	1C RCP Seal Water Injection Throttle Valve.	Heavy dry boron build-up on all bolting.
Q1E11V0024A	20001703	RHR to RCS Hot Legs XConn Valve	Heavy moist boron build-up on gasket, flange, and bolting.
Q1E11V0024B	20001704	RHR to RCS Hot Legs XConn Valve	Heavy moist boron build-up on gasket, flange, and bolting.
Q1E21V0565B	20001663	Letdown Line Penetration Room Isol Valve	Light dry boron build-up on gasket
Q1E21V0119	20001664	CVCS Chg Pump Disch to Regen HX Check Valve	Light dry boron build-up on gasket
Q1E21V0253A	20001665	Letdown Orifice Isol Valve	Light dry boron build-up on gasket
Q1E21V0253C	20001666	Letdown Orifice Isol Valve	Moderate dry boron build-up on gasket.
Q1E21V0243	20001668	RCS Alt Chg Line Isol Valve	Moderate dry boron build-up on gasket.
Q1E11V0043A	20001670	1B RHR HX to RCS Loop Xconn Isol Valve	Light dry boron build-up on gasket
Q1E11H0001A	20001763	RHR HX 1A	Light dry boron build-up on lower ¼ of Flange to Head Joint.
Q1E11H0001B	20001765	RHR HX 1B	Light dry boron build-up on lower 2/3 of Flange to Head Joint.
Q1E11P001B	20001835	1B RHR Pump First Flange Upstream	Light dry boron build-up on flange, bolts, and gasket.
Q1E11V0032A	20001829	1A RHR HX Disch Valve	Light boron build-up on gasket
Q1E11V0026B	20001828	Ctmt Sump to 1B RHR Pump	Heavy boron build-up on flange, gasket, and bolts.
Q1E11P001A	20001834	1A RHR Pump Upstream Flanges (2)	Light dry boron build-up on gaskets.
Q1E11V0033A	20001830	1A RHR HX Bypass Flow Valve	Moderate boron build-up on gasket and bolting.
Q1E11V0033B	20001831	1B RHR HX Bypass Flow Valve	Moderate boron build-up on gasket and bolting.
Q1E11V0009B	20001832	1B RHR HX to Chg Pump Suction	Moist boron build-up around gasket.

FIGURE C-1

Q1E11V0032B	20001833	1B RHR HX Disch Valve	Moderate boron build-up on gasket and bolts.
Q1E21V0049	20002026	Accum Test Line to RWST Isol Valve	Moderate dry boron build-up on gasket
Q1E21V0050	20002027	Accum Test Line to RWST Isol Valve	Moderate dry boron build-up on gasket
Q1E21V0091	20002029	Accumulator Fill Line Isol Valve	Moderate dry boron build-up on gasket
Q1E13V005B	20003609	1B Ctmt Spray Pump to Header Isol Valve	Light dry boron build-up on gasket.
Q1E13V0004A	20003445	1A Ctmt Sump Suction Isol Valve	Moderate dry boron build-up on gasket.
Q1E13V0004B	20003448	1B Ctmt Sump Suction Isol Valve	Moderate dry boron build-up on gasket.
N1E13FE958A	20003663	A Train Containment Flow Element Flange	Light dry boron build-up BDC of flange.
N1E21FE943	20001429	Flow Element Flange in CVCS System	Light dry boron build-up on flange and bolting.

FIGURE 1

VISUAL EXAMINATION RECORD - VT2

FARLEY NUCLEAR PLANT

SOUTHERN NUCLEAR OPERATING COMPANY

Plant/Unit FARLEY /1	Data Package REF. 160.2-1	Drawing Number ** SEE COMMENTS
WO/WA No. W00600211	SystemBoundaries	
Procedure No.FNP-0-NDE-100.22		
Revision No. 2	THE CVCS CHARGING PIPING WAS EXAMINED IN SERVICE UNDER NORMAL OPERATING CONDITIONS. SEE ATTACHED SHEET FOR THE SYSTEM BOUNDARIES. THE EXAMINATION INCLUDED ALL VENTS, DRAINS, INSTRUMENT LINES AND TEST CONNECTIONS WITHIN THE SYSTEM BOUNDARIES. INSULATION WAS REMOVED FROM BOLTED CONNECTIONS TO ALLOW FOR INSPECTIONS.	
Examiner Scott R. Erichson — Level II		
Examiner [illegible] — Level II		
Date (Month-Day-Year) 2-29-00		
SKETCH		

Examination (Per Para. 7.5)

____ Sat ✓ *Unsat

*Provide details on unsat areas (1) Q1E21V016B - MODERATE DRY BORON BUILD-UP ON VALVE STEM. (2) Q1E21V134A - LIGHT DRY BORON BUILD-UP ON VALVE STEM. (3) Q1E21V257 - MODERATE DRY BORON BUILD-UP ON GASKET AND BOLTING. (4) N1E21FE943 - LIGHT DRY BORON BUILD-UP ON FLANGE AND BOLTING. THE REMAINDER OF THE SYSTEM WAS SAT.

Comments ** DRAWING NUMBERS: D-351115 SHT. 1; D-351116 SHT. 1; D-351116 SHT. 6.

MWO 20001434 written to clean + repair valve stem on Q1E21V016B. MWO 20001406 written to clean + repair Q1E21V134A. Not Code items so reinspection not required. Charles W. Dean 5/15/00

FIGURE 1

VISUAL EXAMINATION RECORED VT-1

FARLEY NUCLEAR PLANT

SOUTHERN NUCLEAR OPERATING COMPANY

Plant/Unit	Line Number/Examination Area/Weld No.	Drawing Number	Sheet No.
FARLEY / 1	Q1E21V257	N/A	

Photos	Sketch	Resolution	Technique
___ Yes ___ B&W	___ Yes	✓ 1/32" Division (Scale)	✓ Direct
✓ No ___ Color	✓ No	___ 1/32" Line (Gray Card)	___ Video
			___ Remote

WO/WA 20001405

Procedure No. FNP-0-NDE-100.21

Revision No. 1

Examiner/Initial SCOTT R. ERICKSON Sig. Scott R. Erickson — Level II

Examiner/Initial Sig. N/A — Level N/A

Date (Month-Day-Year) 3-24-00

Equipment	Lighting	Tools		
✓ Mirror	___ Ambient	✓ Scale	___ Depth Gauge	___ Level
___ Magnifier	✓ Flashlight	___ Micrometer	___ Comparator	___
___ CCTV	___ Droplight	___ Caliper	___ Weld Gauge	___

N/A WELDS & BASE MATERIAL VT-1	SAT	UN-SAT	N/A
Ground Blend Material	___	___	___
Undercut	___	___	___
Corrosion build-Up	___	___	___
Gouges	___	___	___
Evidence of Leakage	___	___	___
Arc Strikes	___	___	___
Cracks	___	___	___
Other **	___	___	___

* Provide details on unsat areas by use of supplemental data sheet.

** Provide details on other areas examined

✓ BOLTS, STUDS, AND WASHERS VT-1	SAT	UN-SAT	N/A
Loose Members	___	___	✓
Cracks	✓	___	___
Corrosion	✓	___	___
Gouges	✓	___	___
Thread Damage	✓	___	___
Deformation	✓	___	___
Protective Coating	✓	___	___
Evidence of Leakage	___	___	✓
Other**	___	___	✓

Comments EXAMINED (12) STUDS & (12) NUTS AFTER REMOVAL FROM VALVE BODY. NO VISIBLE WASTAGE OF CROSS SECTIONAL AREA OR THREADED SURFACES NOTED AT TIME OF EXAM. SRE 3-24-00

SHARED

FIGURE 1

SUPPORT EXAMINATION RECORD VT-3

FARLEY NUCLEAR PLANT

SOUTHERN NUCLEAR OPERATING COMPANY

Plant/Unit	Line Number/Examination Area/Weld No.	Drawing Number	Sheet No.
FARLEY / 1	Q1E21V257	N/A	

Photos	Sketch	Resolution	Technique
___ Yes ___ B&W	___ Yes	✓ 1/32" Division (Scale)	✓ Direct
✓ No ___ Color	✓ No	___ 1/32" Line (Gray Card)	___ Video
			___ Remote

WO/WA 20001405
Procedure No. FNP-0-NDE-100.23
Revision No. 3
Examiner/Initial Sig. SCOTT R. ERICKSON Scott R. Erickson — Level II
Examiner/Initial Sig. N/A — Level N/A
Date (Month-Day-Year) 3-24-00

Equipment	Lighting	Tools		
✓ Mirror	___ Ambient	✓ Scale	___ Depth Gauge	___ Level
___ Magnifier	✓ Flashlight	___ Micrometer	___ Comparator	___
___ CCTV	___ Droplight	___ Caliper	___ Weld Gauge	___

N/A SNUBBERS VT-3	SAT	UN-SAT	N/A
Loose Bolt or Pin Connections	___	___	___
Shaft Seal	___	___	___
Fluid Leakage	___	___	___
Fluid Tubing Condition	___	___	___
Shaft Cleanliness	___	___	___
Spherical Bearings	___	___	___
Cotter & Clevis Pins Intact	___	___	___
Other**	___	___	___

* Provide details on unsat areas by use of supplemental data sheet.
** Provide details on other areas examined.

✓ COMP. INTERNALS & MAT'L SURFACE VT-3	SAT	UN-SAT	N/A
Pitting	✓	___	___
Corrosion	✓	___	___
Erosion	✓	___	___
Foreign Material	✓	___	___
Gouged Parts	✓	___	___
Wear	✓	___	___
Evidence of Leakage	___	___	✓
Other Cracks**	___	___	✓

N/A HANGER & SUPPORTS VT-3	SAT	UN-SAT	N/A
Setting:	___	___	___
Hot ___ Cold ___	___	___	___
Misalignment	___	___	___
Damaged Members	___	___	___
Gouges	___	___	___
Arc Strikes	___	___	___
Grind Marks	___	___	___
Freedom of Movement	___	___	___
Other**	___	___	___

Comments EXAMINED FLANGE & GASKET SEATING AREA - SAT. EXAMINED (12) STUDS & (12) NUTS AFTER REMOVAL FROM VALVE BODY. NO VISIBLE WASTAGE OF CROSS SECTIONAL AREA OR THREADED SURFACES NOTED AT TIME OF EXAM. SRE 3-24-00

SHARED

FIGURE 1

VISUAL EXAMINATION RECORED VT-1

FARLEY NUCLEAR PLANT

SOUTHERN NUCLEAR OPERATING COMPANY

Plant/Unit	Line Number/Examination Area/Weld No.	Drawing Number	Sheet No.
FARLEY 1	N1E21FE943	N/A	

Photos	Sketch	Resolution	Technique
___ Yes ___ B&W	___ Yes	✓ 1/32" Division (Scale)	✓ Direct
✓ No ___ Color	✓ No	___ 1/32" Line (Gray Card)	___ Video
			___ Remote

WO/WA 20001429

Procedure No. FNP-0-NDE-100.21

Revision No. 1

Examiner/Initial Sig. SCOTT R. ERICKSON Scott R. Erickson — Level II

Examiner/Initial Sig. N/A — Level N/A

Date (Month-Day-Year) 3-20-00

Equipment	Lighting	Tools		
✓ Mirror	___ Ambient	✓ Scale	___ Depth Gauge	___ Level
___ Magnifier	✓ Flashlight	___ Micrometer	___ Comparator	___
___ CCTV	___ Droplight	___ Caliper	___ Weld Gauge	___

N/A WELDS & BASE MATERIAL VT-1	SAT	UN-SAT	N/A
Ground Blend Material	___	___	___
Undercut	___	___	___
Corrosion build-Up	___	___	___
Gouges	___	___	___
Evidence of Leakage	___	___	___
Arc Strikes	___	___	___
Cracks	___	___	___
Other **	___	___	___

* Provide details on unsat areas by use of supplemental data sheet.

** Provide details on other areas examined

✓ BOLTS, STUDS, AND WASHERS VT-1	SAT	UN-SAT	N/A
Loose Members	___	___	✓
Cracks	✓	___	___
Corrosion	✓*	___	___
Gouges	✓	___	___
Thread Damage	✓*	___	___
Deformation	✓	___	___
Protective Coating	✓	___	___
Evidence of Leakage	___	___	✓
Other**	___	___	✓

* MINOR SURFACE CORROSION & TOOL MARKS NOTED SRE 3-20-00

Comments EXAMINED ALL BOLTING IN DECON ROOM 8 STUDS SAT 16 NUTS SAT SRE 3-20-00

FIGURE 1

SUPPORT EXAMINATION RECORD VT-3

FARLEY NUCLEAR PLANT

SOUTHERN NUCLEAR OPERATING COMPANY

Plant/Unit	Line Number/Examination Area/Weld No.	Drawing Number	Sheet No.
FARLEY 1	N1E21FE943	N/A	

Photos	Sketch	Resolution	Technique
___ Yes ___ B&W	___ Yes	✓ 1/32" Division (Scale)	✓ Direct
✓ No ___ Color	✓ No	___ 1/32" Line (Gray Card)	___ Video
			___ Remote

WO/WA	20001429
Procedure No.	FNP-0-NDE-100.23
Revision No.	3
Examiner/Initial Sig.	SCOTT R. ERICKSON / Scott R. Erickson — Level II
Examiner/Initial Sig.	N/A — Level N/A
Date (Month-Day-Year)	3-20-00

Equipment	Lighting	Tools		
✓ Mirror	___ Ambient	✓ Scale	___ Depth Gauge	___ Level
___ Magnifier	✓ Flashlight	___ Micrometer	___ Comparator	___
___ CCTV	___ Droplight	___ Caliper	___ Weld Gauge	___

N/A SNUBBERS VT-3	SAT	UN-SAT	N/A
Loose Bolt or Pin Connections	___	___	___
Shaft Seal	___	___	___
Fluid Leakage	___	___	___
Fluid Tubing Condition	___	___	___
Shaft Cleanliness	___	___	___
Spherical Bearings	___	___	___
Cotter & Clevis Pins Intact	___	___	___
Other**	___	___	___

* Provide details on unsat areas by use of supplemental data sheet.

** Provide details on other areas examined.

✓ COMP. INTERNALS & MAT'L SURFACE VT-3	SAT	UN-SAT	N/A
Pitting	✓	___	___
Corrosion	✓*	___	___
Erosion	✓	___	___
Foreign Material	✓	___	___
Gouged Parts	✓*	___	___
Wear	✓	___	___
Evidence of Leakage	✓	___	___
Other Cracks**	✓	___	___

* MINOR SURFACE CORROSION & TOOL MARKS ON STUDS & NUTS SRE 3-20-00

N/A HANGER & SUPPORTS VT-3	SAT	UN-SAT	N/A
Setting:	___	___	___
Hot ___ Cold ___	___	___	___
Misalignment	___	___	___
Damaged Members	___	___	___
Gouges	___	___	___
Arc Strikes	___	___	___
Grind Marks	___	___	___
Freedom of Movement	___	___	___
Other**	___	___	___

Comments EXAMINED ACCESSIBLE PORTIONS OF FLANGE & GASKET SEATING SURFACE - SAT. EXAMINED 8 STUDS - SAT & 16 NUTS - SAT IN DECON ROOM. SRE 3-20-00

FIGURE 1

VISUAL EXAMINATION RECORD - VT2

FARLEY NUCLEAR PLANT

SOUTHERN NUCLEAR OPERATING COMPANY

Plant/Unit FARLEY / 1	Data Package REF. 160, 9-1	Drawing Number D-351116 SHT. 2 & SHT. 6
WO/WA No. W00600211	SystemBoundaries	
Procedure No.FNP-0-NDE-100.22		
Revision No. 2	THE CVCS CHARGING PUMP SUCTION PIPING WAS EXAMINED IN SERVICE UNDER NORMAL OPERATING CONDITIONS. SEE ATTACHED SHEETS FOR THE SYSTEM BOUNDARIES. THE EXAMINATION INCLUDED ALL VENTS, DRAINS, INSTRUMENT LINES AND TEST CONNECTIONS WITHIN THE SYSTEM BOUNDARIES. INSULATION WAS REMOVED FROM BOLTED CONNECTIONS TO ALLOW FOR EXAMINATION.	
Examiner Scott R. Erickson — Level II		
Examiner Paul Hilakus — Level II		
Date (Month-Day-Year) 2-29-00		
SKETCH	N/A	

Examination (Per Para. 7.5)

_____ Sat ✓ *Unsat

*Provide details on unsat areas ① 01E21V912 - LIGHT DRY BORON BUILD-UP ON END CAP ② FLANGE BETWEEN QV325A & QV324B - LIGHT DRY BORON BUILD-UP ON BOLTING AND FLANGE. ③ 01E21P002B-AB - MODERATE DRY BORON BUILD-UP ON SEALS - M101 PREVIOUSLY WRITTEN FOR THIS CONDITION. THE REMAINDER OF THE SYSTEM WAS SAT.

Comments MW020001430 written to clean and adjust end cap. Not a Code item, reinspection not required

Charles W Dean 5/15/00

SHARED

FIGURE 1

VISUAL EXAMINATION RECORED VT-1

FARLEY NUCLEAR PLANT

SOUTHERN NUCLEAR OPERATING COMPANY

Plant/Unit	Line Number/Examination Area/Weld No.	Drawing Number	Sheet No.
FARLEY/1	FLANGE BETWEEN Q1E21V325A & Q1E21V324B	N/A	

Photos	Sketch	Resolution	Technique
___ Yes ___ B&W ✓ No ___ Color	___ Yes ✓ No	✓ 1/32" Division (Scale) ___ 1/32" Line (Gray Card)	✓ Direct ___ Video ___ Remote

WO/WA 20001423

Procedure No. FNP-0-NDE-100.21

Revision No. 1

Examiner/Initial Sig. SCOTT R. ERICKSON Scott R. Erickson — Level II

Examiner/Initial Sig. N/A — Level N/A

Date (Month-Day-Year) 3-22-00

Equipment	Lighting	Tools		
✓ Mirror	___ Ambient	✓ Scale	___ Depth Gauge	___ Level
___ Magnifier	✓ Flashlight	___ Micrometer	___ Comparator	___
___ CCTV	___ Droplight	___ Caliper	___ Weld Gauge	___

N/A **WELDS & BASE MATERIAL VT-1**

	SAT	UN-SAT	N/A
Ground Blend Material	___	___	___
Undercut	___	___	___
Corrosion build-Up	___	___	___
Gouges	___	___	___
Evidence of Leakage	___	___	___
Arc Strikes	___	___	___
Cracks	___	___	___
Other **	___	___	___

* Provide details on unsat areas by use of supplemental data sheet.

** Provide details on other areas examined

✓ **BOLTS, STUDS, AND WASHERS VT-1**

	SAT	UN-SAT	N/A
Loose Members	___	___	✓
Cracks	✓	___	___
Corrosion	✓	___	___
Gouges	✓	___	___
Thread Damage	✓	___	___
Deformation	✓	___	___
Protective Coating	✓	___	___
Evidence of Leakage	___	___	✓
Other**	___	___	✓

Comments EXAMINED (8) STUDS & (16) NUTS AFTER REMOVAL FROM FLANGE. NO VISIBLE WASTAGE OF CROSS SECTIONAL AREA OR THREADED SURFACE NOTED. SRE 3-22-00

FIGURE 1

SUPPORT EXAMINATION RECORD VT-3

FARLEY NUCLEAR PLANT

SOUTHERN NUCLEAR OPERATING COMPANY

Plant/Unit	Line Number/Examination Area/Weld No.	Drawing Number	Sheet No.
FARLEY / 1	FLANGE BETWEEN Q1E21V325A & Q1E21V324B	N/A	

Photos	Sketch	Resolution	Technique
___ Yes ___ B&W	___ Yes	✓ 1/32" Division (Scale)	✓ Direct
✓ No ___ Color	✓ No	___ 1/32" Line (Gray Card)	___ Video
			___ Remote

WO/WA 20001423

Procedure No. FNP-0-NDE-100.23

Revision No. 3

Examiner/Initial Sig. SCOTT R. ERICKSON Scott R. Erickson — Level II

Examiner/Initial Sig. N/A — Level N/A

Date (Month-Day-Year) 3-22-00

Equipment	Lighting	Tools		
✓ Mirror	___ Ambient	✓ Scale	___ Depth Gauge	___ Level
___ Magnifier	✓ Flashlight	___ Micrometer	___ Comparator	___
___ CCTV	___ Droplight	___ Caliper	___ Weld Gauge	___

N/A SNUBBERS VT-3	SAT	UN-SAT	N/A
Loose Bolt or Pin Connections	___	___	___
Shaft Seal	___	___	___
Fluid Leakage	___	___	___
Fluid Tubing Condition	___	___	___
Shaft Cleanliness	___	___	___
Spherical Bearings	___	___	___
Cotter & Clevis Pins Intact	___	___	___
Other**	___	___	___

* Provide details on unsat areas by use of supplemental data sheet.

** Provide details on other areas examined.

✓ COMP. INTERNALS & MAT'L SURFACE VT-3	SAT	UN-SAT	N/A
Pitting	✓	___	___
Corrosion	✓	___	___
Erosion	✓	___	___
Foreign Material	✓	___	___
Gouged Parts	✓	___	___
Wear	✓	___	___
Evidence of Leakage	✓	___	___
Other Cracks**	___	___	✓

N/A HANGER & SUPPORTS VT-3	SAT	UN-SAT	N/A
Setting:	___	___	___
Hot ___ Cold ___	___	___	___
Misalignment	___	___	___
Damaged Members	___	___	___
Gouges	___	___	___
Arc Strikes	___	___	___
Grind Marks	___	___	___
Freedom of Movement	___	___	___
Other**	___	___	___

Comments EXAMINED ACCESSIBLE PORTIONS OF GASKET SEATING SURFACE, FLANGE- SAT. EXAMINED (8) STUDS & (16) NUTS AFTER REMOVAL FROM FLANGE. NO VISIBLE WASTAGE OF CROSS SECTIONAL AREA OR THREADED SURFACE NOTED. SRE 3-22-00

SHARED

FIGURE 1

VISUAL EXAMINATION RECORD - VT2

FARLEY NUCLEAR PLANT

SOUTHERN NUCLEAR OPERATING COMPANY

Plant/Unit FARLEY/1	Data Package REF. 160.9-1
Drawing Number ** SEE COMMENTS	
WO/WA No. W00600211	SystemBoundaries
Procedure No.FNP-0-NDE-100.22	
Revision No. 2	THE CVCS CHARGING PUMP SUCTION PIPING WAS EXAMINED IN SERVICE UNDER NORMAL OPERATING CONDITIONS. SEE ATTACHED SHEETS FOR THE SYSTEM BOUNDARIES. THE EXAMINATION INCLUDED ALL VENTS, DRAINS, INSTRUMENT LINES AND TEST CONNECTIONS WITHIN THE SYSTEM BOUNDARIES. INSULATION WAS REMOVED FROM BOLTED CONNECTIONS TO ALLOW FOR EXAMINATION.
Examiner Scott R. Erickson — Level II	
Examiner [illegible] — Level II	
Date (Month-Day-Year) 3-2-00	
SKETCH	

Examination (Per Para. 7.5)

____ Sat ✓ *Unsat

*Provide details on unsat areas (1) QV123C - LIGHT DRY BORON BUILD-UP ON GASKET (2) QV122C - LIGHT DRY BORON ON GASKET AND BOLTING (3) QV336B - LIGHT DRY BORON BUILD-UP ON GASKET (4) QV486 - HEAVY DRY BORON BUILD-UP ON END CAP (5) QV004B - LIGHT MOIST BORON BUILD-UP ON GASKET. (6) Q1E21P002C - MODERATE DRY BORON BUILD-UP ON SEALS - M101 PREVIOUSLY WRITTEN FOR THIS CONDITION. THE REMAINDER OF THE SYSTEM WAS SAT.

Comments ** DWGS: D-351116 SHT. 2; D-351116 SHT. 6; D-351118 SHT. 1

MWO ~~Q1E21~~ CVD 20001421 written to clean and check end cap Q1E21V486. Not A Code item Reinspection Not Required. Charles W. Dean 5/15/00 Q1E21P002C has moderate dry boron build up on seals. An FNP-0-M-101 Report has been submitted to the Borated Water Leakage Assessment Program for evaluation. Not A Code item, Reinspection not Required. Charles W Dean 6/15/00

SHARED

FIGURE 1

VISUAL EXAMINATION RECORED VT-1

FARLEY NUCLEAR PLANT

SOUTHERN NUCLEAR OPERATING COMPANY

Plant/Unit	Line Number/Examination Area/Weld No.	Drawing Number	Sheet No.
FARLEY / /	Q1E21V0122C	N/A	

Photos	Sketch	Resolution	Technique
___ Yes ___ B&W ✓ No ___ Color	___ Yes ✓ No	✓ 1/32" Division (Scale) ___ 1/32" Line (Gray Card)	✓ Direct ___ Video ___ Remote

WO/WA	M20001482
Procedure No.	FNP-0-NDE-100.21
Revision No.	1
Examiner/Initial Sig.	M. GRELL / Manfred Grell
Level	II
Examiner/Initial Sig.	N/A
Level	
Date (Month-Day-Year)	3/17/00

Equipment	Lighting	Tools		
✓ Mirror	___ Ambient	✓ Scale	___ Depth Gauge	___ Level
___ Magnifier	✓ Flashlight	___ Micrometer	___ Comparator	
___ CCTV	___ Droplight	___ Caliper	___ Weld Gauge	

N/A WELDS & BASE MATERIAL VT-1	SAT	UN-SAT	N/A
Ground Blend Material	___	___	___
Undercut	___	___	___
Corrosion build-Up	___	___	___
Gouges	___	___	___
Evidence of Leakage	___	___	___
Arc Strikes	___	___	___
Cracks	___	___	___
Other **	___	___	___

* Provide details on unsat areas by use of supplemental data sheet.

** Provide details on other areas examined

✓ BOLTS, STUDS, AND WASHERS VT-1	SAT	UN-SAT	N/A
Loose Members	___	___	✓
Cracks	✓	___	___
Corrosion	✓	___	___
Gouges	✓	___	___
Thread Damage	✓	___	___
Deformation	✓	___	___
Protective Coating	✓	___	___
Evidence of Leakage	✓	___	___
Other**	___	___	✓

Comments examined bolting and nuts while Valve disassembled - No Visible wastage of cross sectional area or threaded surfaces noted @ time of exam. MB 3.17.00

FIGURE 1

SUPPORT EXAMINATION RECORD VT-3

FARLEY NUCLEAR PLANT

SOUTHERN NUCLEAR OPERATING COMPANY

Plant/Unit	Line Number/Examination Area/Weld No.	Drawing Number	Sheet No.
FARLEY 1	Q1E21V0122C	N/A	

Photos	Sketch	Resolution	Technique
___ Yes ___ B&W	___ Yes	✓ 1/32" Division (Scale)	✓ Direct
✓ No ___ Color	✓ No	___ 1/32" Line (Gray Card)	___ Video
			___ Remote

WO/WA	M 20001482
Procedure No.	FNP-0-NDE-100.23
Revision No.	3
Examiner/Initial Sig.	M. GRELL / Manfred Grell
Level	II
Examiner/Initial Sig.	N/A
Level	
Date (Month-Day-Year)	3-17-00

Equipment	Lighting	Tools		
✓ Mirror	___ Ambient	✓ Scale	___ Depth Gauge	___ Level
___ Magnifier	✓ Flashlight	___ Micrometer	___ Comparator	___
___ CCTV	___ Droplight	___ Caliper	___ Weld Gauge	___

N/A SNUBBERS VT-3	SAT	UN-SAT	N/A
Loose Bolt or Pin Connections	___	___	___
Shaft Seal	___	___	___
Fluid Leakage	___	___	___
Fluid Tubing Condition	___	___	___
Shaft Cleanliness	___	___	___
Spherical Bearings	___	___	___
Cotter & Clevis Pins Intact	___	___	___
Other**	___	___	___

* Provide details on unsat areas by use of supplemental data sheet.

** Provide details on other areas examined.

✓ COMP. INTERNALS & MAT'L SURFACE VT-3	SAT	UN-SAT	N/A
Pitting	✓	___	___
Corrosion	✓	___	___
Erosion	✓	___	___
Foreign Material	✓	___	___
Gouged Parts	✓	___	___
Wear	✓	___	___
Evidence of Leakage	___	___	✓
Other Cracks**	___	___	✓

N/A HANGER & SUPPORTS VT-3	SAT	UN-SAT	N/A
Setting:	___	___	___
Hot ___ Cold ___	___	___	___
Misalignment	___	___	___
Damaged Members	___	___	___
Gouges	___	___	___
Arc Strikes	___	___	___
Grind Marks	___	___	___
Freedom of Movement	___	___	___
Other**	___	___	___

Comments examined Gasket & mating surfaces and all associated bolting while value disassembled

SHARED

FIGURE 1

VISUAL EXAMINATION RECORED VT-1

FARLEY NUCLEAR PLANT

SOUTHERN NUCLEAR OPERATING COMPANY

Plant/Unit	Line Number/Examination Area/Weld No.	Drawing Number	Sheet No.
FARLEY / /	Q1E21V0336B	N/A	

Photos	Sketch	Resolution	Technique	
___ Yes ___ B&W	___ Yes	✓ 1/32" Division (Scale)	✓ Direct	WO/WA 20001427
✓ No ___ Color	✓ No	___ 1/32" Line (Gray Card)	___ Video	Procedure No. FNP-0-NDE-100.21
			___ Remote	Revision No. 1
				Examiner/Initial Sig. M. GRELL Manfred Grell — Level II
				Examiner/Initial Sig. N/A — Level
				Date (Month-Day-Year) 3-27-00

Equipment	Lighting	Tools		
✓ Mirror	___ Ambient	✓ Scale	___ Depth Gauge	___ Level
___ Magnifier	✓ Flashlight	___ Micrometer	___ Comparator	
___ CCTV	___ Droplight	___ Caliper	___ Weld Gauge	

N/A WELDS & BASE MATERIAL VT-1	SAT	UN-SAT	N/A
Ground Blend Material	___	___	___
Undercut	___	___	___
Corrosion build-Up	___	___	___
Gouges	___	___	___
Evidence of Leakage	___	___	___
Arc Strikes	___	___	___
Cracks	___	___	___
Other **	___	___	___

* Provide details on unsat areas by use of supplemental data sheet.

** Provide details on other areas examined

✓ BOLTS, STUDS, AND WASHERS VT-1	SAT	UN-SAT	N/A
Loose Members	___	___	✓
Cracks	✓	___	___
Corrosion	✓	___	___
Gouges	✓	___	___
Thread Damage	* ✓	___	___
Deformation	✓	___	___
Protective Coating	✓	___	___
Evidence of Leakage	✓	___	___
Other**	___	___	✓

* minor tool marks noted on stud & NUT

Comments Examining (1) STUD & NUT after removal from Valve Body. No Visible signs of wastage of cross sectional area or thr eaded surfaces noted @ time of Exam. MG 3-27-00

SHARED

FIGURE 1

SUPPORT EXAMINATION RECORD VT-3

FARLEY NUCLEAR PLANT

SOUTHERN NUCLEAR OPERATING COMPANY

Plant/Unit	Line Number/Examination Area/Weld No.	Drawing Number	Sheet No.
FARLEY / 1	Q1E21V0336B	N/A	

Photos	Sketch	Resolution	Technique
___ Yes ___ B&W	___ Yes	✓ 1/32" Division (Scale)	✓ Direct
✓ No ___ Color	✓ No	___ 1/32" Line (Gray Card)	___ Video
			___ Remote

WO/WA	20001427
Procedure No.	FNP-0-NDE-100.23
Revision No.	3
Examiner/Initial Sig.	M. GREEN Manfd Shell — Level II
Examiner/Initial Sig.	N/A — Level
Date (Month-Day-Year)	3-27-00

Equipment	Lighting	Tools		
✓ Mirror	___ Ambient	✓ Scale	___ Depth Gauge	___ Level
___ Magnifier	✓ Flashlight	___ Micrometer	___ Comparator	___
___ CCTV	___ Droplight	___ Caliper	___ Weld Gauge	___

N/A SNUBBERS VT-3	SAT	UN-SAT	N/A
Loose Bolt or Pin Connections	___	___	___
Shaft Seal	___	___	___
Fluid Leakage	___	___	___
Fluid Tubing Condition	___	___	___
Shaft Cleanliness	___	___	___
Spherical Bearings	___	___	___
Cotter & Clevis Pins Intact	___	___	___
Other**	___	___	___

* Provide details on unsat areas by use of supplemental data sheet.

** Provide details on other areas examined.

✓ COMP. INTERNALS & MAT'L SURFACE VT-3	SAT	UN-SAT	N/A
Pitting	✓	___	___
Corrosion	✓	___	___
Erosion	✓	___	___
Foreign Material	✓	___	___
Gouged Parts	✓	___	___
Wear	✓	___	___
Evidence of Leakage	___	___	✓
Other Cracks**	___	___	✓

examined (1) stud after removal

N/A HANGER & SUPPORTS VT-3	SAT	UN-SAT	N/A
Setting:	___	___	___
Hot ___ Cold ___	___	___	___
Misalignment	___	___	___
Damaged Members	___	___	___
Gouges	___	___	___
Arc Strikes	___	___	___
Grind Marks	___	___	___
Freedom of Movement	___	___	___
Other**	___	___	___

Comments Examined (1) STUD after removal from Valve body. Valve was not disassembled. Stud had only minor tool marks and minor residue noted.

SHARED

FIGURE 1

VISUAL EXAMINATION RECORED VT-1

FARLEY NUCLEAR PLANT

SOUTHERN NUCLEAR OPERATING COMPANY

Plant/Unit FARLEY / 1	Line Number/Examination Area/Weld No. Q1E21V0123C	Drawing Number NA	Sheet No. NA

Photos	Sketch	Resolution	Technique
___ Yes ___ B&W X No ___ Color	___ Yes X No	X 1/32" Division (Scale) ___ 1/32" Line (Gray Card)	X Direct ___ Video ___ Remote

WO/WA	20001483
Procedure No.	FNP-0-NDE-100.21
Revision No.	1
Examiner/Initial Sig.	Tim Alexander / T. Alexander — Level II
Examiner/Initial Sig.	NA — Level
Date (Month-Day-Year)	3-26-00

Equipment	Lighting	Tools		
X Mirror	___ Ambient	X Scale	___ Depth Gauge	___ Level
___ Magnifier	X Flashlight	___ Micrometer	___ Comparator	___
___ CCTV	___ Droplight	___ Caliper	___ Weld Gauge	___

NA WELDS & BASE MATERIAL VT-1	SAT	UN-SAT	N/A
Ground Blend Material	___	___	___
Undercut	___	___	___
Corrosion build-Up	___	___	___
Gouges	___	___	___
Evidence of Leakage	___	___	___
Arc Strikes	___	___	___
Cracks	___	___	___
Other **	___	___	

* Provide details on unsat areas by use of supplemental data sheet.

** Provide details on other areas examined

X BOLTS, STUDS, AND WASHERS VT-1	SAT	UN-SAT	N/A
Loose Members	___	___	X
Cracks	X	___	___
Corrosion	X	___	___
Gouges	X	___	___
Thread Damage	X	___	___
Deformation	X	___	___
Protective Coating	X	___	___
Evidence of Leakage	___	___	X
Other**	___	___	X

Comments Valve was disassembled. Examined twelve (12) studs and twelve(12) nuts Sat. Examined gasket sealing surfaces and flange ligaments Sat.

JA 3-26-00

FIGURE 1

SUPPORT EXAMINATION RECORD VT-3

FARLEY NUCLEAR PLANT

SOUTHERN NUCLEAR OPERATING COMPANY

Plant/Unit	Line Number/Examination Area/Weld No.	Drawing Number	Sheet No.
Farley / 1	Q1E21V0123C	NA	NA

Photos	Sketch	Resolution	Technique
___ Yes ___ B&W	___ Yes	X 1/32" Division (Scale)	X Direct
X No ___ Color	X No	___ 1/32" Line (Gray Card)	___ Video
			___ Remote

(WO)/WA	2000 1483
Procedure No.	FNP-0 NDE-100.3
Revision No.	1
Examiner/Initial Sig.	Tim Alexander / J. Alexander
Level	II
Examiner/Initial Sig.	NA
Level	
Date (Month-Day-Year)	3-26-00

Equipment	Lighting	Tools		
X Mirror	___ Ambient	X Scale	___ Depth Gauge	___ Level
___ Magnifier	X Flashlight	___ Micrometer	___ Comparator	___
___ CCTV	___ Droplight	___ Caliper	___ Weld Gauge	___

NA SNUBBERS VT-3	SAT	UN-SAT	N/A
Loose Bolt or Pin Connections	___	___	___
Shaft Seal	___	___	___
Fluid Leakage	___	___	___
Fluid Tubing Condition	___	___	___
Shaft Cleanliness	___	___	___
Spherical Bearings	___	___	___
Cotter & Clevis Pins Intact	___	___	___
Other**	___	___	___

* Provide details on unsat areas by use of supplemental data sheet.

** Provide details on other areas examined.

X COMP. INTERNALS & MAT'L SURFACE VT-3	SAT	UN-SAT	N/A
Pitting	X	___	___
Corrosion	X	___	___
Erosion	X	___	___
Foreign Material	X	___	___
Gouged Parts	X	___	___
Wear	X	___	___
Evidence of Leakage	___	___	X
Other Cracks**	___	___	X

NA HANGER & SUPPORTS VT-3	SAT	UN-SAT	N/A
Setting:	___	___	___
Hot ___ Cold ___	___	___	___
Misalignment	___	___	___
Damaged Members	___	___	___
Gouges	___	___	___
Arc Strikes	___	___	___
Grind Marks	___	___	___
Freedom of Movement	___	___	___
Other**	___	___	___

Comments Examined valve flanges & gasket sealing surfaces 24. Examined (12) and (12) nuts. Found no obvious sign of degradation J.A. 3-26-00

SHARED

FIGURE 1

VISUAL EXAMINATION RECORED VT-1

FARLEY NUCLEAR PLANT

SOUTHERN NUCLEAR OPERATING COMPANY

Plant/Unit	Line Number/Examination Area/Weld No.	Drawing Number	Sheet No.
FARLEY /1	Q1E11V009B	N/A	

Photos	Sketch	Resolution	Technique
___ Yes ___ B&W	___ Yes	✓ 1/32" Division (Scale)	✓ Direct
✓ No ___ Color	✓ No	___ 1/32" Line (Gray Card)	___ Video
			___ Remote

WO/WA 20001832

Procedure No. FNP-0-NDE-100.21

Revision No. 1

Examiner/Initial Sig. SCOTT R. ERICKSON / Scott R. Erickson — Level II

Examiner/Initial Sig. N/A — Level N/A

Date (Month-Day-Year) 4-3-00

Equipment	Lighting	Tools		
✓ Mirror	___ Ambient	✓ Scale	___ Depth Gauge	___ Level
___ Magnifier	✓ Flashlight	___ Micrometer	___ Comparator	___
___ CCTV	___ Droplight	___ Caliper	___ Weld Gauge	___

N/A **WELDS & BASE MATERIAL VT-1**

	SAT	UN-SAT	N/A
Ground Blend Material	___	___	___
Undercut	___	___	___
Corrosion build-Up	___	___	___
Gouges	___	___	___
Evidence of Leakage	___	___	___
Arc Strikes	___	___	___
Cracks	___	___	___
Other **	___	___	___

* Provide details on unsat areas by use of supplemental data sheet.

** Provide details on other areas examined

✓ **BOLTS, STUDS, AND WASHERS VT-1**

	SAT	UN-SAT	N/A
Loose Members	___	___	✓
Cracks	✓	___	___
Corrosion	✓	___	___
Gouges	✓	___	___
Thread Damage	✓	___	___
Deformation	✓	___	___
Protective Coating	___	___	✓
Evidence of Leakage	___	___	✓
Other**	___	___	✓

Comments EXAMINED (16) STUDS & (32) NUTS AFTER REMOVAL FROM VALVE BODY. NO VISIBLE WASTAGE OF CROSS SECTIONAL AREA OR THREADED SURFACES NOTED AT TIME OF EXAM. SRE 4-3-00

FIGURE 1

SUPPORT EXAMINATION RECORD VT-3

FARLEY NUCLEAR PLANT

SOUTHERN NUCLEAR OPERATING COMPANY

Plant/Unit	Line Number/Examination Area/Weld No.	Drawing Number	Sheet No.
FARLEY 1	Q1E11V009B	N/A	

Photos	Sketch	Resolution	Technique
___ Yes ___ B&W	___ Yes	✓ 1/32" Division (Scale)	✓ Direct
✓ No ___ Color	✓ No	___ 1/32" Line (Gray Card)	___ Video
			___ Remote

(WO)/WA 20001832	
Procedure No. FNP-0-NDE-100.23	
Revision No. 3	
Examiner/Initial Sig. SCOTT R. ERICKSON Scott R. Erickson	Level II
Examiner/Initial Sig. N/A	Level N/A
Date (Month-Day-Year) 4-3-00	

Equipment	Lighting	Tools		
✓ Mirror	___ Ambient	✓ Scale	___ Depth Gauge	___ Level
___ Magnifier	✓ Flashlight	___ Micrometer	___ Comparator	___
___ CCTV	___ Droplight	___ Caliper	___ Weld Gauge	___

N/A SNUBBERS VT-3	SAT	UN-SAT	N/A
Loose Bolt or Pin Connections	___	___	___
Shaft Seal	___	___	___
Fluid Leakage	___	___	___
Fluid Tubing Condition	___	___	___
Shaft Cleanliness	___	___	___
Spherical Bearings	___	___	___
Cotter & Clevis Pins Intact	___	___	___
Other**	___	___	___

* Provide details on unsat areas by use of supplemental data sheet.

** Provide details on other areas examined.

✓ COMP. INTERNALS & MAT'L SURFACE VT-3	SAT	UN-SAT	N/A
Pitting	✓	___	___
Corrosion	✓	___	___
Erosion	✓	___	___
Foreign Material	✓	___	___
Gouged Parts	✓	___	___
Wear	✓	___	___
Evidence of Leakage	✓	___	___
Other Cracks**	___	___	✓

N/A HANGER & SUPPORTS VT-3	SAT	UN-SAT	N/A
Setting:	___	___	___
Hot ___ Cold ___	___	___	___
Misalignment	___	___	___
Damaged Members	___	___	___
Gouges	___	___	___
Arc Strikes	___	___	___
Grind Marks	___	___	___
Freedom of Movement	___	___	___
Other**	___	___	___

Comments EXAMINED FLANGE & GASKET SEATING AREA. EXAMINED (16) STUDS & (32) NUTS AFTER REMOVAL FROM VALVE BODY. NO VISIBLE WASTAGE OF CROSS SECTIONAL AREA OR THREADED SURFACES NOTED AT TIME OF EXAM. SRE 4-3-00

FIGURE 1

VISUAL EXAMINATION RECORD - VT2

FARLEY NUCLEAR PLANT

SOUTHERN NUCLEAR OPERATING COMPANY

Plant/Unit FARLEY / 1	Data Package REF. 160. 3-1
WO/WA No. W00600211	Drawing Number * * SEE COMMENTS
Procedure No. FNP-0-NDE-100.22	SystemBoundaries
Revision No. 2	THE CVCS SEAL INJECTION PIPING WAS EXAMINED IN SERVICE UNDER NORMAL OPERATING CONDITIONS. SEE ATTACHED SHEETS FOR THE SYSTEM BOUNDARIES. THE EXAMINATION INCLUDED ALL VENTS, DRAINS, INSTRUMENT LINES AND TEST CONNECTIONS WITHIN THE SYSTEM BOUNDARIES. INSULATION WAS REMOVED FROM BOLTED CONNECTIONS TO ALLOW FOR EXAMINATIONS.
Examiner Scott R. Erichson — Level II	
Examiner [illegible] — Level II	
Date (Month-Day-Year) 3-2-00	
SKETCH	

Examination (Per Para. 7.5)

_____ Sat ✓ *Unsat

*Provide details on unsat areas (1) Q1E21V116C - HEAVY DRY BORON BUILD-UP ON BOLTING, GASKET AND STEM (2) Q1E21V489B - MODERATE DRY BORON BUILD-UP ON END CAP (3) Q1E21V540B - LIGHT DRY BORON BUILD-UP ON END CAP. THE REMAINDER OF THE SYSTEM WAS SAT.

Comments ** DRAWINGS: D-351115 SHT. 1; D-351116 SHT. 1; D-351116 SHT. 6.

MWO20003934 written to clean and repair endcap on Q1E21V489B as needed. MWO20003957 written to clean and repair end cap on Q1E21V540B as needed. These are not Code items, Reinspection is not required. Charles W Dean 5/15/00

SHARED

FIGURE 1

VISUAL EXAMINATION RECORED VT-1

FARLEY NUCLEAR PLANT

SOUTHERN NUCLEAR OPERATING COMPANY

Plant/Unit	Line Number/Examination Area/Weld No.	Drawing Number	Sheet No.
FARLEY Farley/1	Q1E21V 0116C	N/A	

Photos	Sketch	Resolution	Technique	
___ Yes ___ B&W	___ Yes	✓ 1/32" Division (Scale)	✓ Direct	___ Video
✓ No ___ Color	✓ No	___ 1/32" Line (Gray Card)	___ Remote	

WO/WA	20001485
Procedure No.	FNP-0-NDE-100.21
Revision No.	1
Examiner/Initial Sig.	M. GREEN Manfred Green
Level	II
Examiner/Initial Sig.	N/A
Level	
Date (Month-Day-Year)	3-28-00

Equipment	Lighting	Tools		
✓ Mirror	___ Ambient	✓ Scale	___ Depth Gauge	___ Level
___ Magnifier	✓ Flashlight	___ Micrometer	___ Comparator	___
___ CCTV	___ Droplight	___ Caliper	___ Weld Gauge	___

N/A WELDS & BASE MATERIAL VT-1	SAT	UN-SAT	N/A
Ground Blend Material	___	___	___
Undercut	___	___	___
Corrosion build-Up	___	___	___
Gouges	___	___	___
Evidence of Leakage	___	___	___
Arc Strikes	___	___	___
Cracks	___	___	___
Other **	___	___	___

* Provide details on unsat areas by use of supplemental data sheet.

** Provide details on other areas examined

✓ BOLTS, STUDS, AND WASHERS VT-1	SAT	UN-SAT	N/A
Loose Members	___	___	✓
Cracks	✓	___	___
Corrosion	✓	___	___
Gouges	✓	___	___
Thread Damage	* ✓	___	___
Deformation	✓	___	___
Protective Coating	✓	___	___
Evidence of Leakage	✓	___	___
Other**	___	___	✓

* minor tool mark noted

examined 6 STUDS (1) removed (5) Inplace

Comments no visible Wastage of cross sectional area or threaded surfaces noted @ time of exam MM 3/28/00

FIGURE 1

SUPPORT EXAMINATION RECORD VT-3

FARLEY NUCLEAR PLANT

SOUTHERN NUCLEAR OPERATING COMPANY

Plant/Unit	Line Number/Examination Area/Weld No.	Drawing Number	Sheet No.
FARLEY/1	Q1E2N0116 C	N/A	

Photos	Sketch	Resolution	Technique
___ Yes ___ B&W	___ Yes	✓ 1/32" Division (Scale)	✓ Direct
✓ No ___ Color	✓ No	___ 1/32" Line (Gray Card)	___ Video
			___ Remote

WO/WA	20001485
Procedure No.	FNP-O-NDE-100.23
Revision No.	3
Examiner/Initial Sig.	M.GRELL Manfal Grell — Level II
Examiner/Initial Sig.	N/A — Level
Date (Month-Day-Year)	3·28·00

Equipment	Lighting	Tools		
✓ Mirror	___ Ambient	✓ Scale	___ Depth Gauge	___ Level
___ Magnifier	✓ Flashlight	___ Micrometer	___ Comparator	___
___ CCTV	___ Droplight	___ Caliper	___ Weld Gauge	___

N/A SNUBBERS VT-3	SAT	UN-SAT	N/A
Loose Bolt or Pin Connections	___	___	___
Shaft Seal	___	___	___
Fluid Leakage	___	___	___
Fluid Tubing Condition	___	___	___
Shaft Cleanliness	___	___	___
Spherical Bearings	___	___	___
Cotter & Clevis Pins Intact	___	___	___
Other**	___	___	___

* Provide details on unsat areas by use of supplemental data sheet.

** Provide details on other areas examined.

✓ COMP. INTERNALS & MAT'L SURFACE VT-3	SAT	UN-SAT	N/A
Pitting	✓	___	___
Corrosion	✓	___	___
Erosion	✓	___	___
Foreign Material	✓	___	___
Gouged Parts	✓	___	___
Wear	* ✓	___	___
Evidence of Leakage	✓	___	___
Other Cracks**	___	___	✓

* minor tool marks noted on studs

___ HANGER & SUPPORTS VT-3	SAT	UN-SAT	N/A
Setting:	___	___	___
Hot ___ Cold ___	___	___	___
Misalignment	___	___	___
Damaged Members	___	___	___
Gouges	___	___	___
Arc Strikes	___	___	___
Grind Marks	___	___	___
Freedom of Movement	___	___	___
Other**	___	___	___

Comments examined 6 STUDS and nuts. 5 STUDS I/P 1 STUD removed from Valve body. examined Gasket Seating Surfaces. no abnormalities noted @ time of exam. MG 3/28-00

FIGURE 1

VISUAL EXAMINATION RECORD - VT2

FARLEY NUCLEAR PLANT

SOUTHERN NUCLEAR OPERATING COMPANY

Plant/Unit FARLEY /1	Data Package REF. 160.9-1	Drawing Number ** SEE COMMENTS
WO/WA No. W00600211	SystemBoundaries	
Procedure No.FNP-0-NDE-100.22		
Revision No. 2	THE CVCS CHARGING PUMP SUCTION PIPING WAS	
Examiner Scott R. Erickson Level II	EXAMINED IN SERVICE UNDER NORMAL OPERATING CONDITIONS.	
Examiner [illegible] Level II	SEE ATTACHED SHEETS FOR THE SYSTEM BOUNDARIES. THE	
Date (Month-Day-Year) 3-1-00	EXAMINATION INCLUDED ALL VENTS, DRAINS, INSTRUMENT	
SKETCH	LINES AND TEST CONNECTIONS WITHIN THE SYSTEM	
	BOUNDARIES. INSULATION WAS REMOVED FROM BOLTED	
	CONNECTIONS TO ALLOW FOR EXAMINATION.	
	N/A	

Examination (Per Para. 7.5)

_____ Sat ✓ *Unsat

*Provide details on unsat areas ① QV182A- LIGHT DRY BORON BUILD-UP ON GASKET ② QV336A- LIGHT DRY BORON BUILD-UP ON VALVE STEM ③ N1E21F009A - UPSTREAM FLANGE HAS LIGHT DRY BORON BUILD-UP ON GASKET, DOWNSTREAM SIDE HAS MODERATE DRY BORON BUILD-UP ON GASKET AND BOLTING ④ Q1E21P002A - MODERATE DRY BORON BUILD-UP ON SEALS. (1 DROP/SECOND LEAK WITH PUMP OFF) M-101 PREVIOUSLY WRITTEN FOR THIS CONDITION. THE REMAINDER OF THE SYSTEM WAS SAT.

Comments ** DRAWINGS: D-351116 SHT 2; D-351116 SHT. 6; D-351118 SHT. 1

MW02000143 2 written to clean valve stem and check packing on Q1E21V336A. Not a Code item, reinspection not required. Charles W. Dean 5/15/00 Q1E21P002A has moderate dry boron build up on seals and a 1 drop/sec leak. An FNP-0-M-101 Report has been submitted to the Borated Water Leakage Assessment Program for evaluation. Not a Code item, reinspection not required. Charles W. Dean 6/15/00.

SHARED

FIGURE 1

VISUAL EXAMINATION RECORED VT-1

FARLEY NUCLEAR PLANT

SOUTHERN NUCLEAR OPERATING COMPANY

Plant/Unit FARLEY / 1	Line Number/Examination Area/Weld No. Q1E21V0182A	Drawing Number NA	Sheet No. NA

Photos	Sketch	Resolution	Technique
___ Yes ___ B&W	___ Yes	X 1/32" Division (Scale)	X Direct
X No ___ Color	X No	___ 1/32" Line (Gray Card)	___ Video
			___ Remote

WO/WA	20001468
Procedure No.	FNP-0-NDE-100.21
Revision No.	1
Examiner/Initial Sig.	Tim Alexander / T. Alexander — Level II
Examiner/Initial Sig.	NA — Level
Date (Month-Day-Year)	3-26-00

Equipment	Lighting	Tools		
X Mirror	___ Ambient	X Scale	___ Depth Gauge	___ Level
___ Magnifier	X Flashlight	___ Micrometer	___ Comparator	___
___ CCTV	___ Droplight	___ Caliper	___ Weld Gauge	___

NA WELDS & BASE MATERIAL VT-1	SAT	UN-SAT	N/A
Ground Blend Material	___	___	___
Undercut	___	___	___
Corrosion build-Up	___	___	___
Gouges	___	___	___
Evidence of Leakage	___	___	___
Arc Strikes	___	___	___
Cracks	___	___	___
Other **	___	___	

* Provide details on unsat areas by use of supplemental data sheet.

** Provide details on other areas examined

X BOLTS, STUDS, AND WASHERS VT-1	SAT	UN-SAT	N/A
Loose Members	___	___	X
Cracks	X	___	___
Corrosion	X	___	___
Gouges	X	___	___
Thread Damage	X	___	___
Deformation	X	___	___
Protective Coating	X	___	___
Evidence of Leakage	___	___	X
Other**	___	___	X

Comments Valve was disassembled, Examined (12) studs and (24) nuts Sat. Examined gasket sealing surfaces and flange ligaments Sat. 29 3-26-00

SHARED

FIGURE 1

SUPPORT EXAMINATION RECORD VT-3

FARLEY NUCLEAR PLANT

SOUTHERN NUCLEAR OPERATING COMPANY

Plant/Unit	Line Number/Examination Area/Weld No.	Drawing Number	Sheet No.
Farley/ 1	Q1E21V0182A	NA	

Photos	Sketch	Resolution	Technique
___ Yes ___ B&W X No ___ Color	___ Yes X No	X 1/32" Division (Scale) ___ 1/32" Line (Gray Card)	X Direct ___ Video ___ Remote

WO/WA M 2000 1468

Procedure No. FNP-0-NDE-100.23

Revision No. 3

Examiner/Initial Sig. Tim Alexander / T. Alexander — Level II

Examiner/Initial Sig. NA — Level NA

Date (Month-Day-Year) 3-26-00

Equipment	Lighting	Tools		
X Mirror	___ Ambient	X Scale	___ Depth Gauge	___ Level
___ Magnifier	X Flashlight	___ Micrometer	___ Comparator	___
___ CCTV	___ Droplight	___ Caliper	___ Weld Gauge	___

NA SNUBBERS VT-3	SAT	UN-SAT	N/A
Loose Bolt or Pin Connections	___	___	___
Shaft Seal	___	___	___
Fluid Leakage	___	___	___
Fluid Tubing Condition	___	___	___
Shaft Cleanliness	___	___	___
Spherical Bearings	___	___	___
Cotter & Clevis Pins Intact	___	___	___
Other**	___	___	___

* Provide details on unsat areas by use of supplemental data sheet.

** Provide details on other areas examined.

X COMP. INTERNALS & MAT'L SURFACE VT-3	SAT	UN-SAT	N/A
Pitting	X	___	___
Corrosion	X	___	___
Erosion	X	___	___
Foreign Material	X	___	___
Gouged Parts	X	___	___
Wear	X	___	___
Evidence of Leakage	___	___	X
Other Cracks**	___	___	X

NA HANGER & SUPPORTS VT-3	SAT	UN-SAT	N/A
Setting:	___	___	___
Hot ___ Cold ___	___	___	___
Misalignment	___	___	___
Damaged Members	___	___	___
Gouges	___	___	___
Arc Strikes	___	___	___
Grind Marks	___	___	___
Freedom of Movement	___	___	___
Other**	___	___	___

Comments Examined valve flanges + gasket seating surfaces Sat. Examined (12) studs + (24) nuts. Found no obvious sign of degradation. J.A. 3-26-00

SHARED

FIGURE 1

SUPPORT EXAMINATION RECORD VT-3

FARLEY NUCLEAR PLANT

SOUTHERN NUCLEAR OPERATING COMPANY

Plant/Unit	Line Number/Examination Area/Weld No.	Drawing Number	Sheet No.
FARLEY / 1	N1E21 F 0009A	N/A	

Photos	Sketch	Resolution	Technique
___ Yes ___ B&W	___ Yes	✓ 1/32" Division (Scale)	✓ Direct
✓ No ___ Color	✓ No	___ 1/32" Line (Gray Card)	___ Video
			___ Remote

WO/WA	WO# 20001477
Procedure No.	FNP-0-NDE-10023
Revision No.	3
Examiner/Initial Sig.	M. GRELL Manfd Grell — Level II
Examiner/Initial Sig.	N/A — Level
Date (Month-Day-Year)	3·23·00

Equipment	Lighting	Tools		
✓ Mirror	___ Ambient	✓ Scale	___ Depth Gauge	___ Level
___ Magnifier	✓ Flashlight	___ Micrometer	___ Comparator	___
___ CCTV	___ Droplight	___ Caliper	___ Weld Gauge	___

N/A SNUBBERS VT-3	SAT	UN-SAT	N/A
Loose Bolt or Pin Connections	___	___	___
Shaft Seal	___	___	___
Fluid Leakage	___	___	___
Fluid Tubing Condition	___	___	___
Shaft Cleanliness	___	___	___
Spherical Bearings	___	___	___
Cotter & Clevis Pins Intact	___	___	___
Other**	___	___	___

* Provide details on unsat areas by use of supplemental data sheet.

** Provide details on other areas examined.

✓ COMP. INTERNALS & MAT'L SURFACE VT-3	SAT	UN-SAT	N/A
Pitting	✓	___	___
Corrosion	___	✓	___
Erosion	___	✓	___
Foreign Material	✓	___	___
Gouged Parts	✓	___	___
Wear	___	✓	___
Evidence of Leakage	___	✓	___
Other Cracks**	___	___	✓

Examined 16 STUDS & 32 NUTS

N/A HANGER & SUPPORTS VT-3	SAT	UN-SAT	N/A
Setting: Hot ___ Cold ___	___	___	___
Misalignment	___	___	___
Damaged Members	___	___	___
Gouges	___	___	___
Arc Strikes	___	___	___
Grind Marks	___	___	___
Freedom of Movement	___	___	___
Other**	___	___	___

Comments STUDS exhibited loss of material in threaded area and several had severe tool marks & upset threads. Nuts also had excessive corrosion

SHARED

FIGURE 1

VISUAL EXAMINATION RECORED VT-1

FARLEY NUCLEAR PLANT

SOUTHERN NUCLEAR OPERATING COMPANY

Plant/Unit	Line Number/Examination Area/Weld No.	Drawing Number	Sheet No.
FARLEY 1	N1E21 F009A	N/A	

Photos	Sketch	Resolution	Technique
___ Yes ___ B&W	___ Yes	✓ 1/32" Division (Scale)	✓ Direct
✓ No ___ Color	✓ No	___ 1/32" Line (Gray Card)	___ Video
			___ Remote

WO/WA	20001477
Procedure No.	FNP-0-NDE-100.21
Revision No.	1
Examiner/Initial Sig.	M. GRELL Marvin Grell
Level	II
Examiner/Initial Sig.	N/A
Level	
Date (Month-Day-Year)	3-23-00

Equipment	Lighting	Tools		
✓ Mirror	___ Ambient	✓ Scale	___ Depth Gauge	___ Level
___ Magnifier	✓ Flashlight	___ Micrometer	___ Comparator	___
___ CCTV	___ Droplight	___ Caliper	___ Weld Gauge	___

N/A WELDS & BASE MATERIAL VT-1	SAT	UN-SAT	N/A
Ground Blend Material	___	___	___
Undercut	___	___	___
Corrosion build-Up	___	___	___
Gouges	___	___	___
Evidence of Leakage	___	___	___
Arc Strikes	___	___	___
Cracks	___	___	___
Other **	___	___	___

* Provide details on unsat areas by use of supplemental data sheet.

** Provide details on other areas examined

✓ BOLTS, STUDS, AND WASHERS VT-1	SAT	UN-SAT	N/A
Loose Members	___	___	✓
Cracks	✓	___	___
Corrosion	✓	___	___
Gouges	✓	___	___
Thread Damage	✓	___	___
Deformation	✓	___	___
Protective Coating	✓	___	___
Evidence of Leakage	N/A	___	✓
Other**	N/A	___	✓

Comments examined 16 STUDS & 32 NUTS, all items new from warehouse to replace items previously rejected

MWG 3-23-00

SHARED

FIGURE 1

SUPPORT EXAMINATION RECORD VT-3

FARLEY NUCLEAR PLANT

SOUTHERN NUCLEAR OPERATING COMPANY

Plant/Unit	Line Number/Examination Area/Weld No.	Drawing Number	Sheet No.
FARLEY 1	N1E21 F009A	N/A	

Photos	Sketch	Resolution	Technique
___ Yes ___ B&W	___ Yes	✓ 1/32" Division (Scale)	✓ Direct
✓ No ___ Color	✓ No	___ 1/32" Line (Gray Card)	___ Video
			___ Remote

WO/WA	2000 1477
Procedure No.	FNP-0-NDE-100.23
Revision No.	3
Examiner/Initial Sig.	M. GRELL Manfred Grell — Level II
Examiner/Initial Sig.	N/A — Level
Date (Month-Day-Year)	3/23/00

Equipment	Lighting	Tools		
✓ Mirror	___ Ambient	✓ Scale	___ Depth Gauge	___ Level
___ Magnifier	✓ Flashlight	___ Micrometer	___ Comparator	___
___ CCTV	___ Droplight	___ Caliper	___ Weld Gauge	___

___ SNUBBERS VT-3	SAT	UN-SAT	N/A
Loose Bolt or Pin Connections	___	___	___
Shaft Seal	___	___	___
Fluid Leakage	___	___	___
Fluid Tubing Condition	___	___	___
Shaft Cleanliness	___	___	___
Spherical Bearings	___	___	___
Cotter & Clevis Pins Intact	___	___	___
Other**	___	___	___

* Provide details on unsat areas by use of supplemental data sheet.

** Provide details on other areas examined.

✓ COMP. INTERNALS & MAT'L SURFACE VT-3	SAT	UN-SAT	N/A
Pitting	✓	___	___
Corrosion	✓	___	___
Erosion	✓	___	___
Foreign Material	✓	___	___
Gouged Parts	✓	___	___
Wear	✓	___	___
Evidence of Leakage	___	___	✓
Other Cracks**	___	___	✓

___ HANGER & SUPPORTS VT-3	SAT	UN-SAT	N/A
Setting:	___	___	___
Hot ___ Cold ___	___	___	___
Misalignment	___	___	___
Damaged Members	___	___	___
Gouges	___	___	___
Arc Strikes	___	___	___
Grind Marks	___	___	___
Freedom of Movement	___	___	___
Other**	___	___	___

Comments Examined flanges on spool piece and existing pipe - Gasked mating surfaces showed no wear or surface pitting, scratches, tool marks etc. MG 3-23-00

FIGURE 1

VISUAL EXAMINATION RECORD - VT2

FARLEY NUCLEAR PLANT

SOUTHERN NUCLEAR OPERATING COMPANY

Plant/Unit FARLEY 1/1	Data Package REF. 160.6-1	Drawing Number D-351107 SHT. 1, D-351115 SHT. 2, D-351118 SHT. 1
WO/WA No. W00600211	SystemBoundaries	
Procedure No. FNP-0-NDE-100.22		
Revision No. 2	THE RHR 'A' TRAIN PIPING WAS EXAMINED IN SERVICE UNDER NORMAL OPERATING CONDITIONS. SEE ATTACHED SHEETS FOR THE SYSTEM BOUNDARIES. THE EXAMINATION INCLUDED ALL VENTS, DRAINS, INSTRUMENT LINES AND TEST CONNECTIONS WITHIN THE SYSTEM BOUNDARIES. INSULATION WAS REMOVED FROM BOLTED CONNECTIONS TO ALLOW FOR EXAMINATION.	
Examiner [signature] Level II		
Examiner N/A Level N/A		
Date (Month-Day-Year) 3-9-00		
SKETCH	N/A	

Examination (Per Para. 7.5)

_____ Sat ✓ *Unsat

*Provide details on unsat areas (1) QV079A - MODERATE DRY BORON BUILD-UP ON END CAP (2) QV066C - LIGHT DRY BORON BUILD-UP ON END CAP (3) QV037A - HEAVY DRY BORON BUILD-UP ON VALVE STEM (4) QV047D - LIGHT DRY BORON BUILD-UP ON END CAP (5) QV024A - HEAVY MOIST BORON ON GASKET, FLANGE AND BOLTING (6) QV044 - MODERATE DRY BORON BUILD-UP ON GASKET (7) QV032A - LIGHT DRY BORON BUILD-UP ON STEM AND GASKET (8) QV033A - MODERATE DRY BORON BUILD-UP ON STEM, GASKET AND BOLTING (9) 2 FLANGES U/S OF PUMP - LIGHT DRY BORON BUILD-UP ON GASKETS, (10) H001A-A - LIGHT DRY BORON BUILD-UP LOWER 1/3 OF FLANGE. THE REMAINDER OF THE SYSTEM WAS SAT.

~~Comments~~ SRL 3-15-00

MWO 20001706 written to clean and check Q1E11V0044 Gasket buildup of BORON & BORON not in contact with bolting. MWO 20001713 written to clean and check end cap on Q1E11V0079A, MWO 20001714 written to clean and check end cap on Q1E11V0066C, MWO 20001715 written to clean valve stem and adjust packing on Q1E11V0037A, and MWO 20001716 written to clean and check end cap on Q1E11V0047D. These are all non-Code items and do not require re-inspection. Charles W. Dean 6/15/00

Component	Pressure Test	ISI Bdry Dwg No.	Coord	Loc Dwg	Evaluation/ Insulation/ Notes	Remarks
RESIDUAL HEAT EXCHANGER NO 1						
Q1E11H001A-A	160.6-1	D-351118-1	B-9	D-175063	2A/N	TUBE SIDE
RESIDUAL HEAT REMOVAL PUMP NO 1						
Q1E11P001A-A	160.6-1	D-351118-1	G-7	D-175063	2A/N	
3/8" ECB-18 (SS)	160.6-1	D-351107-1	D-3	E2601	2A/Y/7	FROM REDUCER
¾" ECB-18	160.6-1	D-351118-1	B-8	E2601	2A/Y/7	
>	160.6-1	D-351107-1	D-2	E2601	2A/Y/7	TO REDUCER
3" ECB-30	160.6-1	D-351118-1	F-5	EG038,EG042	2A/Y/7	CROSSOVER LINE BETWEEN RHR NO. 1 PUMP & RHR NO. 1 HEAT EXCHANGERS.
2" ECB-30	160.6-1	D-351118-1	E-5	E314	2A/Y/7	BETWEEN REDUCERS (QV037A)
10" ECB-2	160.6-1	D-351115-2	F-4	EG517	2A/Y/7	CROSSOVER LINE BETWEEN RHR NO 1 HX & RHR NO 2 HX TO V024B
8" ECB-29	160.6-1	D-351115-2	F-4	EG518	2A/Y/7	TESTED TO QV041 (E-4)
10" ECB-28	160.6-1	D-351115-2	G-3	EG517,EG518	2A/Y/7	TESTED TO QV044 (F-3)
10" ECB-2 (RHR 1)	160.6-1	D-351115-2	F-3	EG038	2A/Y/7	TESTED TO VALVE QV023B (F-3)
10" ECB-16	160.6-1	D-351118-1	G-9	EG037,EG042	2A/Y/7	FROM RHR PUMP NO. 1 TO HX. NO. 1
¾" ECB-16	160.6-1	D-351118-1	F-10	EG042	2A/Y/7	TESTED TO VALVES QV004A, QV006A
	160.6-1	D-351118-1	G-9	EG042	2A/Y/7	TESTED TO VALVES QV007A
8" ECB-16	160.6-1	D-351118-1	G-8	EG042	2A/Y/7	FROM RHR PUMP NO. 1 TO REDUCER
10" ECB-18	160.6-1	D-351118-1	B-7	EG037,EG038	2A/Y/7	FROM HX. NO. 1
>	160.6-1	D-351115-2	F-4	EG517	2A/Y/7	TO CROSSOVER (10" ECB-2)
¾" ECB-18	160.6-1	D-351118-1	B-4	E3712	2A/Y/7	TESTED TO QV011A, QV012A
2" ECB-21	160.6-1	D-351118-1	B-7	E052	2A/Y/7	TESTED TO VALVE QV013A
8" ECB-24	160.6-1	D-351118-1	B-8	E2601	2A/Y/7	TESTED TO QV009A
8" ECB-29	160.6-1	D-351118-1	B-7	EG038	2A/Y/7	BYPASS AROUND HX. NO. 1
12" ECB-14	160.6-1	D-351118-1	G-3	EG041,EG042, EG040,EG690	2A/Y/7	TESTED FROM CTMT. WALL. PEN. (NO. 16) TO REDUCER

J. M. Farley Nuclear Plant - Unit 1, Class 2

Component	Pressure Test	ISI Bdry Dwg No.	Coord	Loc Dwg	Evaluation/ Insulation/ Notes	Remarks
14" ECB-5 (L1)	160.6-1	D-351115-2	F-8	EG394	2A/Y/7	TESTED TO VALVE QV027A (F-10)
14" ECB-7	160.6-1	D-351115-2	J-6	EG394	2A/Y/7	TESTED TO VALVE QV025A (H-5)
14" ECB-14	160.6-1	D-351118-1	G-6	EG042	2A/Y/7	FROM REDUCER TO RHR PUMP NO. 1

FIGURE 1

SUPPORT EXAMINATION RECORD VT-3

FARLEY NUCLEAR PLANT

SOUTHERN NUCLEAR OPERATING COMPANY

Plant/Unit	Line Number/Examination Area/Weld No.	Drawing Number	Sheet No.
FARLEY/1	Q1E11V024A	N/A	

Photos	Sketch	Resolution	Technique
___ Yes ___ B&W	___ Yes	✓ 1/32" Division (Scale)	✓ Direct
✓ No ___ Color	✓ No	___ 1/32" Line (Gray Card)	___ Video
			___ Remote

(WO)/WA 20001703	
Procedure No. FNP-0-NDE-100.23	
Revision No. 3	
Examiner/Initial Sig. [signature]	Level II
Examiner/Initial Sig. N/A	Level N/A
Date (Month-Day-Year) 3-31-00	

Equipment	Lighting	Tools		
✓ Mirror	___ Ambient	✓ Scale	___ Depth Gauge	___ Level
___ Magnifier	✓ Flashlight	___ Micrometer	___ Comparator	___
___ CCTV	___ Droplight	___ Caliper	___ Weld Gauge	___

N/A SNUBBERS VT-3	SAT	UN-SAT	N/A
Loose Bolt or Pin Connections	___	___	___
Shaft Seal	___	___	___
Fluid Leakage	___	___	___
Fluid Tubing Condition	___	___	___
Shaft Cleanliness	___	___	___
Spherical Bearings	___	___	___
Cotter & Clevis Pins Intact	___	___	___
Other**	___	___	___

* Provide details on unsat areas by use of supplemental data sheet.

** Provide details on other areas examined.

✓ COMP. INTERNALS & MAT'L SURFACE VT-3	SAT	UN-SAT	N/A
Pitting	✓	___	___
Corrosion	✓	___	___
Erosion	✓	___	___
Foreign Material	✓	___	___
Gouged Parts	✓	___	___
Wear	✓	___	___
Evidence of Leakage	✓	___	___
Other Cracks**	___	___	✓

N/A HANGER & SUPPORTS VT-3	SAT	UN-SAT	N/A
Setting:	___	___	___
Hot ___ Cold ___	___	___	___
Misalignment	___	___	___
Damaged Members	___	___	___
Gouges	___	___	___
Arc Strikes	___	___	___
Grind Marks	___	___	___
Freedom of Movement	___	___	___
Other**	___	___	___

Comments EXAMINED FLANGE & GASKET SEATING SURFACE. EXAMINED (20) STUDS & (40) NUTS AFTER REMOVAL FROM VALVE BODY. NO VISIBLE WASTAGE OF CROSS SECTIONAL AREA OR THREADED SURFACES NOTED AT TIME OF EXAM

SHARED

FIGURE 1

VISUAL EXAMINATION RECORED VT-1

FARLEY NUCLEAR PLANT

SOUTHERN NUCLEAR OPERATING COMPANY

Plant/Unit	Line Number/Examination Area/Weld No.	Drawing Number	Sheet No.
FARLEY 1/1	Q1E11V024A	N/A	

Photos	Sketch	Resolution	Technique
___ Yes ___ B&W	___ Yes	✓ 1/32" Division (Scale)	✓ Direct
✓ No ___ Color	✓ No	___ 1/32" Line (Gray Card)	___ Video
			___ Remote

WO/WA 20001703

Procedure No. FNP-0-NDE-100.21

Revision No. 1

Examiner/Initial Sig. [signature] Level II

Examiner/Initial Sig. N/A Level N/A

Date (Month-Day-Year) 3-31-00

Equipment	Lighting	Tools		
✓ Mirror	___ Ambient	✓ Scale	___ Depth Gauge	___ Level
___ Magnifier	✓ Flashlight	___ Micrometer	___ Comparator	___
___ CCTV	___ Droplight	___ Caliper	___ Weld Gauge	___

N/A **WELDS & BASE MATERIAL VT-1**

	SAT	UN-SAT	N/A
Ground Blend Material	___	___	___
Undercut	___	___	___
Corrosion build-Up	___	___	___
Gouges	___	___	___
Evidence of Leakage	___	___	___
Arc Strikes	___	___	___
Cracks	___	___	___
Other **	___	___	

* Provide details on unsat areas by use of supplemental data sheet.

** Provide details on other areas examined

✓ **BOLTS, STUDS, AND WASHERS VT-1**

	SAT	UN-SAT	N/A
Loose Members	___	___	✓
Cracks	✓	___	___
Corrosion	✓	___	___
Gouges	✓	___	___
Thread Damage	✓	___	___
Deformation	✓	___	___
Protective Coating	✓	___	___
Evidence of Leakage	___	___	✓
Other**	___	___	✓

Comments EXAMINED (20) STUDS & (40) NUTS AFTER REMOVAL FROM VALVE BODY. NO VISIBLE WASTAGE OF CROSS SECTIONAL AREA OR THREADED SURFACES NOTED AT TIME OF EXAM

SHARED

FIGURE 1

SUPPORT EXAMINATION RECORD VT-3

FARLEY NUCLEAR PLANT

SOUTHERN NUCLEAR OPERATING COMPANY

Plant/Unit	Line Number/Examination Area/Weld No.	Drawing Number	Sheet No.
Farley/1	Q1E11V0032A	N/A	

Photos	Sketch	Resolution	Technique
___ Yes ___ B&W	___ Yes	✓ 1/32" Division (Scale)	✓ Direct
✓ No ___ Color	✓ No	___ 1/32" Line (Gray Card)	___ Video
			___ Remote

WO/WA	20001829
Procedure No.	FNP-0-NDE-100.23
Revision No.	3
Examiner/Initial Sig.	M. GRELL Manfred Grell — Level II
Examiner/Initial Sig.	N/A — Level
Date (Month-Day-Year)	3-31-00

Equipment	Lighting	Tools		
✓ Mirror	___ Ambient	✓ Scale	___ Depth Gauge	___ Level
___ Magnifier	✓ Flashlight	___ Micrometer	___ Comparator	
___ CCTV	___ Droplight	___ Caliper	___ Weld Gauge	

N/A SNUBBERS VT-3	SAT	UN-SAT	N/A
Loose Bolt or Pin Connections			
Shaft Seal			
Fluid Leakage			
Fluid Tubing Condition			
Shaft Cleanliness			
Spherical Bearings			
Cotter & Clevis Pins Intact			
Other**			

* Provide details on unsat areas by use of supplemental data sheet.

** Provide details on other areas examined.

✓ COMP. INTERNALS & MAT'L SURFACE VT-3	SAT	UN-SAT	N/A
Pitting	✓		
Corrosion	✓		
Erosion	✓		
Foreign Material	✓		
Gouged Parts	✓		
Wear	✓		
Evidence of Leakage	✓		
Other Cracks**			✓

N/A HANGER & SUPPORTS VT-3	SAT	UN-SAT	N/A
Setting:			
Hot ___ Cold ___			
Misalignment			
Damaged Members			
Gouges			
Arc Strikes			
Grind Marks			
Freedom of Movement			
Other**			

Comments examined gasket seating surfaces on both flanges and both seating surface on valve. no abnormalities noted @ time of exam MD 3-31-00

SHARED

FIGURE 1

VISUAL EXAMINATION RECORED VT-1

FARLEY NUCLEAR PLANT

SOUTHERN NUCLEAR OPERATING COMPANY

Plant/Unit	Line Number/Examination Area/Weld No.	Drawing Number	Sheet No.
FARLEY / 1	Q1E11V0032A	N/A	

Photos	Sketch	Resolution	Technique
___ Yes ___ B&W	___ Yes	✓ 1/32" Division (Scale)	✓ Direct
✓ No ___ Color	✓ No	___ 1/32" Line (Gray Card)	___ Video
			___ Remote

WO/WA	20001829
Procedure No.	FNP-0-NDE-100.21
Revision No.	1
Examiner/Initial Sig.	M. GREYL Manfd Grell
Level	II
Examiner/Initial Sig.	N/A
Level	
Date (Month-Day-Year)	3-31-00

Equipment	Lighting	Tools		
✓ Mirror	___ Ambient	✓ Scale	___ Depth Gauge	___ Level
___ Magnifier	✓ Flashlight	___ Micrometer	___ Comparator	___
___ CCTV	___ Droplight	___ Caliper	___ Weld Gauge	___

N/A WELDS & BASE MATERIAL VT-1	SAT	UN-SAT	N/A
Ground Blend Material	___	___	___
Undercut	___	___	___
Corrosion build-Up	___	___	___
Gouges	___	___	___
Evidence of Leakage	___	___	___
Arc Strikes	___	___	___
Cracks	___	___	___
Other **	___	___	___

* Provide details on unsat areas by use of supplemental data sheet.

** Provide details on other areas examined

✓ BOLTS, STUDS, AND WASHERS VT-1	SAT	UN-SAT	N/A
Loose Members	✓	___	___
Cracks	✓	___	___
Corrosion	✓	___	___
Gouges	✓	___	___
Thread Damage *	✓	___	___
Deformation	✓	___	___
Protective Coating	✓	___	___
Evidence of Leakage	✓	___	___
Other**	___	___	✓

* only minor tool marks noted

Comments examined 9 long & 6 Short studs after flanges disassembled. no visible wastage of cross sectional area or threaded surfaces noted. MS 3-31-00

SHARED

FIGURE 1

VISUAL EXAMINATION RECORED VT-1

FARLEY NUCLEAR PLANT

SOUTHERN NUCLEAR OPERATING COMPANY

Plant/Unit	Line Number/Examination Area/Weld No.	Drawing Number	Sheet No.
FARLEY / 1	Q1E11V0032A	N/A	

Photos	Sketch	Resolution	Technique
___ Yes ___ B&W	___ Yes	✓ 1/32" Division (Scale)	✓ Direct
✓ No ___ Color	✓ No	___ 1/32" Line (Gray Card)	___ Video
			___ Remote

WO/WA	2000 1829
Procedure No.	FNP-0-NDE-100.21
Revision No.	1
Examiner/Initial Sig.	M. GRELL Manfred Grell
Level	II
Examiner/Initial Sig.	N/A
Level	
Date (Month-Day-Year)	3-31-00

Equipment	Lighting	Tools		
✓ Mirror	___ Ambient	✓ Scale	___ Depth Gauge	___ Level
___ Magnifier	✓ Flashlight	___ Micrometer	___ Comparator	___
___ CCTV	___ Droplight	___ Caliper	___ Weld Gauge	___

N/A WELDS & BASE MATERIAL VT-1	SAT	UN-SAT	N/A
Ground Blend Material	___	___	___
Undercut	___	___	___
Corrosion build-Up	___	___	___
Gouges	___	___	___
Evidence of Leakage	___	___	___
Arc Strikes	___	___	___
Cracks	___	___	___
Other **	___	___	___

* Provide details on unsat areas by use of supplemental data sheet.

** Provide details on other areas examined

✓ BOLTS, STUDS, AND WASHERS VT-1	SAT	UN-SAT	N/A
Loose Members	✓	___	___
Cracks	✓	___	___
Corrosion	✓	___	___
Gouges	___	___	✓
Thread Damage	___	___	✓
Deformation	✓	___	___
Protective Coating	✓	___	___
Evidence of Leakage	✓	___	___
Other**	___	___	✓

Comments (2) short studs rejected due to thread damage also (3) long studs rejected by maintainance during removal of those studs MJ 3/31/00

SHARED

FIGURE 1

VISUAL EXAMINATION RECORED VT-1

FARLEY NUCLEAR PLANT

SOUTHERN NUCLEAR OPERATING COMPANY

Plant/Unit	Line Number/Examination Area/Weld No.	Drawing Number	Sheet No.
FARLEY 1	Q1E11V0032A	N/A	

Photos	Sketch	Resolution	Technique
___ Yes ___ B&W	___ Yes	✓ 1/32" Division (Scale)	✓ Direct
✓ No ___ Color	✓ No	___ 1/32" Line (Gray Card)	___ Video
			___ Remote

WO/WA	20001829
Procedure No.	FNP-0-NDE-100.21
Revision No.	1
Examiner/Initial Sig.	SCOTT R. ERICKSON / Scott R. Erickson
Level	II
Examiner/Initial Sig.	N/A
Level	N/A
Date (Month-Day-Year)	3-31-00

Equipment	Lighting	Tools		
✓ Mirror	___ Ambient	✓ Scale	___ Depth Gauge	___ Level
___ Magnifier	✓ Flashlight	___ Micrometer	___ Comparator	___
___ CCTV	___ Droplight	___ Caliper	___ Weld Gauge	___

N/A WELDS & BASE MATERIAL VT-1	SAT	UN-SAT	N/A
Ground Blend Material	___	___	___
Undercut	___	___	___
Corrosion build-Up	___	___	___
Gouges	___	___	___
Evidence of Leakage	___	___	___
Arc Strikes	___	___	___
Cracks	___	___	___
Other **	___	___	___

* Provide details on unsat areas by use of supplemental data sheet.

** Provide details on other areas examined

✓ BOLTS, STUDS, AND WASHERS VT-1	SAT	UN-SAT	N/A
Loose Members	___	___	✓
Cracks	✓	___	___
Corrosion	✓	___	___
Gouges	✓	___	___
Thread Damage	✓	___	___
Deformation	✓	___	___
Protective Coating	___	___	✓
Evidence of Leakage	___	___	✓
Other**	___	___	✓

Comments EXAMINED (2) NEW SHORT STUDS, (3) NEW LONG STUDS, & (10) NEW NUTS PRIOR TO INSTALLATION INTO VALVE BODY - SAT SRE 3-31-00

FIGURE 1

SUPPORT EXAMINATION RECORD VT-3

FARLEY NUCLEAR PLANT

SOUTHERN NUCLEAR OPERATING COMPANY

Plant/Unit	Line Number/Examination Area/Weld No.	Drawing Number	Sheet No.
FARLEY 1/1	Q1E11 V033A	N/A	

Photos	Sketch	Resolution	Technique
___ Yes ___ B&W	___ Yes	✓ 1/32" Division (Scale)	✓ Direct
✓ No ___ Color	✓ No	___ 1/32" Line (Gray Card)	___ Video
			___ Remote

(WO)/WA	20001830
Procedure No.	FNP-0-NDE-100.23
Revision No.	3
Examiner/Initial Sig.	SCOTT R. ERICKSON / Scott R. Erickson — Level II
Examiner/Initial Sig.	N/A — Level N/A
Date (Month-Day-Year)	4-4-00

Equipment	Lighting	Tools		
✓ Mirror	___ Ambient	✓ Scale	___ Depth Gauge	___ Level
___ Magnifier	✓ Flashlight	___ Micrometer	___ Comparator	___
___ CCTV	___ Droplight	___ Caliper	___ Weld Gauge	___

N/A SNUBBERS VT-3	SAT	UN-SAT	N/A
Loose Bolt or Pin Connections	___	___	___
Shaft Seal	___	___	___
Fluid Leakage	___	___	___
Fluid Tubing Condition	___	___	___
Shaft Cleanliness	___	___	___
Spherical Bearings	___	___	___
Cotter & Clevis Pins Intact	___	___	___
Other**	___	___	___

* Provide details on unsat areas by use of supplemental data sheet.

** Provide details on other areas examined.

✓ COMP. INTERNALS & MAT'L SURFACE VT-3	SAT	UN-SAT	N/A
Pitting	✓	___	___
Corrosion	✓	___	___
Erosion	✓	___	___
Foreign Material	✓	___	___
Gouged Parts	✓	___	___
Wear	✓	___	___
Evidence of Leakage	___	___	✓
Other Cracks**	___	___	✓

N/A HANGER & SUPPORTS VT-3	SAT	UN-SAT	N/A
Setting:	___	___	___
Hot ___ Cold ___	___	___	___
Misalignment	___	___	___
Damaged Members	___	___	___
Gouges	___	___	___
Arc Strikes	___	___	___
Grind Marks	___	___	___
Freedom of Movement	___	___	___
Other**	___	___	___

Comments EXAMINED FLANGE & GASKET SEATING AREA. MM REJECTED STUDS, VT-1 ON (12) NEW STUDS & (24) NEW NUTS. EXAMINED (6) GLAND STUDS & (6) NUTS AFTER REMOVAL. NO VISIBLE WASTAGE OF CROSS SECTIONAL AREA OR THREADED SURFACES NOTED AT TIME OF EXAM. SRE 4-4-00

SHARED

FIGURE 1

VISUAL EXAMINATION RECORED VT-1

FARLEY NUCLEAR PLANT

SOUTHERN NUCLEAR OPERATING COMPANY

Plant/Unit	Line Number/Examination Area/Weld No.	Drawing Number	Sheet No.
FARLEY /1	Q1E11V033A	N/A	

Photos	Sketch	Resolution	Technique
___ Yes ___ B&W	___ Yes	✓ 1/32" Division (Scale)	✓ Direct
✓ No ___ Color	✓ No	___ 1/32" Line (Gray Card)	___ Video
			___ Remote

WO/WA 20001830

Procedure No. FNP-0-NDE-100.21

Revision No. 1

Examiner/Initial Sig. SCOTT R. ERICKSON / Scott R. Erickson — Level II

Examiner/Initial Sig. N/A — Level N/A

Date (Month-Day-Year) 4-4-00

Equipment	Lighting	Tools		
✓ Mirror	___ Ambient	✓ Scale	___ Depth Gauge	___ Level
___ Magnifier	✓ Flashlight	___ Micrometer	___ Comparator	___
___ CCTV	___ Droplight	___ Caliper	___ Weld Gauge	___

N/A WELDS & BASE MATERIAL VT-1	SAT	UN-SAT	N/A
Ground Blend Material	___	___	___
Undercut	___	___	___
Corrosion build-Up	___	___	___
Gouges	___	___	___
Evidence of Leakage	___	___	___
Arc Strikes	___	___	___
Cracks	___	___	___
Other **	___	___	___

* Provide details on unsat areas by use of supplemental data sheet.

** Provide details on other areas examined

✓ BOLTS, STUDS, AND WASHERS VT-1	SAT	UN-SAT	N/A
Loose Members	___	___	✓
Cracks	✓	___	___
Corrosion	✓	___	___
Gouges	✓	___	___
Thread Damage	✓	___	___
Deformation	✓	___	___
Protective Coating	___	___	✓
Evidence of Leakage	___	___	✓
Other**	___	___	✓

Comments EXAMINED (12) NEW STUDS & (24) NEW NUTS (MM REJECTED OLD STUDS). EXAMINED (6) GLAND STUDS & (6) NUTS AFTER REMOVAL. NO VISIBLE WASTAGE OF CROSS SECTIONAL AREA OR THREADED SURFACES NOTED AT TIME OF EXAM. SRE 4-4-00

FIGURE 1

SUPPORT EXAMINATION RECORD VT-3

FARLEY NUCLEAR PLANT

SOUTHERN NUCLEAR OPERATING COMPANY

Plant/Unit	Line Number/Examination Area/Weld No.	Drawing Number	Sheet No.
FARLEY 1	Q1E11P001A 2 U.S. Flanges	N/A	

Photos	Sketch	Resolution	Technique
___ Yes ___ B&W	___ Yes	✓ 1/32" Division (Scale)	✓ Direct
✓ No ___ Color	✓ No	___ 1/32" Line (Gray Card)	___ Video
			___ Remote

WO/WA	20001834
Procedure No.	FNP-0-NDE-10023
Revision No.	3
Examiner/Initial Sig.	M. GRELL Manfred Grell
Level	II
Examiner/Initial Sig.	N/A
Level	
Date (Month-Day-Year)	3·28·00

Equipment	Lighting	Tools		
✓ Mirror	___ Ambient	✓ Scale	___ Depth Gauge	___ Level
___ Magnifier	✓ Flashlight	___ Micrometer	___ Comparator	
___ CCTV	___ Droplight	___ Caliper	___ Weld Gauge	

N/A SNUBBERS VT-3	SAT	UN-SAT	N/A
Loose Bolt or Pin Connections			
Shaft Seal			
Fluid Leakage			
Fluid Tubing Condition			
Shaft Cleanliness			
Spherical Bearings			
Cotter & Clevis Pins Intact			
Other**			

* Provide details on unsat areas by use of supplemental data sheet.

** Provide details on other areas examined.

✓ COMP. INTERNALS & MAT'L SURFACE VT-3	SAT	UN-SAT	N/A
Pitting	✓		
Corrosion	* ✓		
Erosion	✓		
Foreign Material	✓		
Gouged Parts	✓		
Wear	* ✓		
Evidence of Leakage	✓		
Other Cracks**			✓

examined 20 studs & 40 Nuts after flanges disassembled * minor surface corrosion & tool marks noted on studs

N/A HANGER & SUPPORTS VT-3	SAT	UN-SAT	N/A
Setting:			
Hot ___ Cold ___			
Misalignment			
Damaged Members			
Gouges			
Arc Strikes			
Grind Marks			
Freedom of Movement			
Other**			

Comments examined studs - Nuts and all gasket mating surfaces while flanges disassembled - No visible Wastage of cross sectional area noted. No abnormalities noted @ time of exam. MMS 3-28-00

SHARED

FIGURE 1

VISUAL EXAMINATION RECORED VT-1

FARLEY NUCLEAR PLANT

SOUTHERN NUCLEAR OPERATING COMPANY

Plant/Unit	Line Number/Examination Area/Weld No.	Drawing Number	Sheet No.
FARLEY Farley 1	Q1E11P0001A 2 U.S. Flange	N/A	

Photos	Sketch	Resolution	Technique	
___ Yes ___ B&W	___ Yes	✓ 1/32" Division (Scale)	✓ Direct	WO/WA 20001834
✓ No ___ Color	✓ No	___ 1/32" Line (Gray Card)	___ Video	Procedure No. FNP-0-NDE-100.21
			___ Remote	Revision No. 1
				Examiner/Initial Sig. M. GREEN Level II
				Examiner/Initial Sig. N/A Level
				Date (Month-Day-Year) 3.28.00

Equipment	Lighting	Tools		
✓ Mirror	___ Ambient	✓ Scale	___ Depth Gauge	___ Level
___ Magnifier	✓ Flashlight	___ Micrometer	___ Comparator	___
___ CCTV	___ Droplight	___ Caliper	___ Weld Gauge	___

N/A WELDS & BASE MATERIAL VT-1	SAT	UN-SAT	N/A
Ground Blend Material	___	___	___
Undercut	___	___	___
Corrosion build-Up	___	___	___
Gouges	___	___	___
Evidence of Leakage	___	___	___
Arc Strikes	___	___	___
Cracks	___	___	___
Other **	___	___	___

* Provide details on unsat areas by use of supplemental data sheet.

** Provide details on other areas examined

✓ BOLTS, STUDS, AND WASHERS VT-1	SAT	UN-SAT	N/A
Loose Members	___	___	✓
Cracks	✓	___	___
Corrosion	*✓	___	___
Gouges	✓	___	___
Thread Damage	*✓	___	___
Deformation	✓	___	___
Protective Coating	✓	___	___
Evidence of Leakage	✓	___	___
Other**	___	___	✓

* minor surface corrosion & toolmarks noted.

Comments examined 20 STUDS and 40 NUTS after flange disassembly examined studs and nuts, noted no visible wastage of cross sectional area or threaded surface 3-28-00

SHARED

FIGURE 1

VISUAL EXAMINATION RECORED VT-1

FARLEY NUCLEAR PLANT

SOUTHERN NUCLEAR OPERATING COMPANY

Plant/Unit	Line Number/Examination Area/Weld No.	Drawing Number	Sheet No.
FARLEY 1	Q1E11H0001A	N/A	

Photos	Sketch	Resolution	Technique	
___ Yes ___ B&W	___ Yes	✓ 1/32" Division (Scale)	✓ Direct	WO/WA M20001763
✓ No ___ Color	✓ No	___ 1/32" Line (Gray Card)	___ Video	Procedure No. FNP-0-NDE-100.21
			___ Remote	Revision No. 1
				Examiner/Initial Sig. M. GRELL Manfd Grell — Level II

Equipment	Lighting	Tools			Examiner/Initial Sig. N/A — Level
✓ Mirror	___ Ambient	✓ Scale	___ Depth Gauge	___ Level	Date (Month-Day-Year)
___ Magnifier	✓ Flashlight	___ Micrometer	___ Comparator	___	3/17/00
___ CCTV	___ Droplight	___ Caliper	___ Weld Gauge	___	

N/A **WELDS & BASE MATERIAL VT-1**

	SAT	UN-SAT	N/A
Ground Blend Material	___	___	___
Undercut	___	___	___
Corrosion build-Up	___	___	___
Gouges	___	___	___
Evidence of Leakage	___	___	___
Arc Strikes	___	___	___
Cracks	___	___	___
Other **	___	___	___

* Provide details on unsat areas by use of supplemental data sheet.

** Provide details on other areas examined

✓ **BOLTS, STUDS, AND WASHERS VT-1**

	SAT	UN-SAT	N/A
Loose Members	___	___	✓
Cracks	✓	___	___
Corrosion	✓*	___	___
Gouges	✓*	___	___
Thread Damage	✓*	___	___
Deformation	✓	___	___
Protective Coating	✓	___	___
Evidence of Leakage	___	___	✓
Other**	___	___	✓

* minor surface corrosion & tool marks noted. MO 3/17/00

Comments examined (1) STUD after removal for inspection. no visible wastage of cross sectional area or threaded surfaces noted @ time of exam. MG 3/17/00

FIGURE 1

SUPPORT EXAMINATION RECORD VT-3

FARLEY NUCLEAR PLANT

SOUTHERN NUCLEAR OPERATING COMPANY

Plant/Unit	Line Number/Examination Area/Weld No.	Drawing Number	Sheet No.
FARLEY 1	Q1E11H0001A	N/A	

Photos	Sketch	Resolution	Technique
___ Yes ___ B&W	___ Yes	✓ 1/32" Division (Scale)	✓ Direct
✓ No ___ Color	✓ No	___ 1/32" Line (Gray Card)	___ Video
			___ Remote

WO/WA	M 20001763
Procedure No.	FNP-0-NDE-100.23
Revision No.	3
Examiner/Initial Sig.	M. GRELL / Manfd. Grell — Level II
Examiner/Initial Sig.	N/A — Level
Date (Month-Day-Year)	3/17/00

Equipment	Lighting	Tools		
✓ Mirror	___ Ambient	✓ Scale	___ Depth Gauge	___ Level
___ Magnifier	✓ Flashlight	___ Micrometer	___ Comparator	___
___ CCTV	___ Droplight	___ Caliper	___ Weld Gauge	___

N/A SNUBBERS VT-3	SAT	UN-SAT	N/A
Loose Bolt or Pin Connections			
Shaft Seal			
Fluid Leakage			
Fluid Tubing Condition			
Shaft Cleanliness			
Spherical Bearings			
Cotter & Clevis Pins Intact			
Other**			

* Provide details on unsat areas by use of supplemental data sheet.

** Provide details on other areas examined.

✓ COMP. INTERNALS & MAT'L SURFACE VT-3	SAT	UN-SAT	N/A
Pitting	✓		
Corrosion	✓		
Erosion	✓		
Foreign Material	✓		
Gouged Parts	✓		
Wear	✓		
Evidence of Leakage			✓
Other Cracks**			✓

N/A HANGER & SUPPORTS VT-3	SAT	UN-SAT	N/A
Setting:			
Hot ___ Cold ___			
Misalignment			
Damaged Members			
Gouges			
Arc Strikes			
Grind Marks			
Freedom of Movement			
Other**			

Comments minor surface corrosion and tool marks noted on the (1) STUD removed for inspection no visible wastage of cross sectional area or threaded surfaces noted @ time of exam. MWJ 3/17/00

RHR HEAT EXCHANGER Q1E11H0001A
PRESSURE TEST AND BOLTED CONNECTION INSPECTION

The ASME Code required Pressure Test was accomplished during the 1R16 refueling outage. A slight amount of boron buildup was noted in the lower quadrant around the heat exchanger head-to-tubesheet gasket. The boron buildup was dry and no evidence of an active leak was noted. The area around the gasket and bolting was cleaned, and as much of the boron buildup as possible was removed without disassembly of the heat exchanger. A small amount of boron residue could not be removed with the heat exchanger intact. The stud in the vicinity of maximum boron buildup was removed and VT-3/VT-1 examined for evidence of corrosion. No evidence of wastage or any other corrosion mechanism was observed during the visual examination. The stud was reinstalled in the heat exchanger.

The head-to-tubesheet bolting for Heat Exchanger Q1E11H001A will be given the Code required visual examination for evidence of corrosion in conjunction with the next Code required Pressure Test in approximately 40 months during the next ISI Period.

Charles W. Dean

Prepared by: Charles W. Dean
May 15, 2000

David Hartline

Approved by: David B. Hartline
May 15, 2000

FIGURE 1

VISUAL EXAMINATION RECORD - VT2

FARLEY NUCLEAR PLANT

SOUTHERN NUCLEAR OPERATING COMPANY

Plant/Unit FARLEY / 1		Data Package REF. 160.7-1	Drawing Number D-351107 SHT. 1, D-351115 SHT. 2, D-351118 SHT. 1
WO/WA No. W00600211		SystemBoundaries	
Procedure No. FNP-0-NDE-100.22			
Revision No. 2		THE RHR 'B' TRAIN PIPING WAS EXAMINED IN SERVICE UNDER NORMAL OPERATING CONDITIONS. SEE ATTACHED SHEET FOR THE SYSTEM BOUNDARIES. THE EXAMINATION INCLUDED ALL VENTS, DRAINS, INSTRUMENT LINES AND TEST CONNECTIONS WITHIN THE SYSTEM BOUNDARIES. INSULATION WAS REMOVED FROM BOLTED CONNECTIONS TO ALLOW FOR EXAMINATION.	
Examiner [signature]	Level II		
Examiner N/A	Level N/A		
Date (Month-Day-Year) 3-9-00			
SKETCH		N/A	

Examination (Per Para. 7.5)

_____ Sat ✓ *Unsat

*Provide details on unsat areas (1) QV026B - HEAVY DRY BORON BUILD-UP ON BOLTS, FLANGE AND GASKET (2) 1SE FLANGE U/S OF PUMP - LIGHT DRY BORON BUILD-UP ON FLANGE, BOLTS AND GASKET (3) QV033B - MODERATE DRY BORON BUILD-UP ON GASKET & BOLTING (4) QV032B - MODERATE DRY BORON BUILD-UP ON GASKET AND BOLTING (5) QV083B - MODERATE DRY BORON BUILD-UP ON END CAP (6) QV068D - MODERATE DRY BORON BUILD-UP ON END CAP (7) QV065B - MODERATE DRY BORON BUILD-UP ON END CAP (8) QV079B - MODERATE DRY BORON BUILD-UP ON END CAP (9) QV070D - MODERATE DRY BORON BUILD-UP ON END CAP (10) QV024B - HEAVY MOIST BORON BUILD-UP ON GASKET, FLANGE AND BOLTING (11) H001B - LIGHT DRY BORON BUILDUP ON LOWER 1/4 OF FLANGE.

~~Comments~~ SEE 3-16-00

THE REMAINDER OF THE SYSTEM WAS SAT.

Sheet 1 of 3

CWD w/st00 Revision 2

J. M. Farley Nuclear Plant - Unit 1, Class 2

Component	Pressure Test	ISI Bdry Dwg No.	Coord	Loc Dwg	Evaluation/ Insulation/ Notes	Remarks
RESIDUAL HEAT EXCHANGER NO 2						
Q1E11H001B-B	160.7-1	D-351118-1	C-9	D-175063	2A/N	TUBE SIDE
RESIDUAL HEAT REMOVAL PUMP NO 2						
Q1E11P001B-B	160.7-1	D-351118-1	E-7	D-175063	2A/N	
¾" ECB-17 (SS)	160.7-1	D-351107-1	F-3	E2602	2A/Y/7	FROM REDUCER
¾" ECB-17	160.7-1	D-351118-1	D-8		2A/Y/7	
>	160.7-1	D-351107-1	E-2		2A/Y/7	TO REDUCER
2" ECB-22	160.7-1	D-351118-1	C-7	E0052	2A/Y/7	TESTED TO VALVE QV013B (A-7)
3" ECB-28	160.7-1	D-351118-1	D-5	EG043, EG045,E0306	2A/Y/7	CROSSOVER LINE BETWEEN RHR PUMP NO. 2 & RHR NO. 2 HEAT EXCHANGER
2" ECB-28	160.7-1	D-351118-1	D-5	E0306	2A/Y/7	BETWEEN REDUCERS (QV037B)
10" ECB-2 (RHR 2)	160.7-1	D-351115-2	G-3	EG517	2A/Y/7	TESTED TO VALVE QV023A (G-3)
10" ECB-15	160.7-1	D-351118-1	E-8	EG046,EG043	2A/Y/7	FROM RHR PUMP NO. 2 TO HX. NO. 2
3/4" ECB-15	160.7-1	D-351118-1	E-9	EG046	2A/Y/7	TESTED TO VALVES QV004B, QV006B
	160.7-1	D-351118-1	E-8	EG046	2A/Y/7	TESTED TO VALVES QV010B
8" ECB-15	160.7-1	D-351118-1	E-7	EG046	2A/Y/7	FROM RHR PUMP NO. 2 TO REDUCER
10" ECB-17	160.7-1	D-351118-1	C-7	EG043,EG044	2A/Y/7	FROM HX. NO. 2
>	160.7-1	D-351115-2	G-4	EG517,EG044	2A/Y/7	TO CROSSOVER (10" ECB-2) INCL. VALVE QV024B
3/4" ECB-17	160.7-1	D-351118-1	C-4	E4096	2A/Y/7	TESTED TO VALVES QV011B, QV012B
8" ECB-25	160.7-1	D-351118-1	C-8	EG043	2A/Y/7	TESTED TO VALVE QV009B (C-7)
8" ECB-31	160.7-1	D-351118-1	D-8	EG043	2A/Y/7	BYPASS AROUND HX. NO. 2
12" ECB-13	160.7-1	D-351118-1	E-3	EG045,EG690	2A/Y/7	PENETRATION (NO. 18) TESTED FROM CTMT WALL TO REDUCER
14" ECB-5 (L2)	160.7-1	D-351115-2	G-8	EG394	2A/Y/7	TESTED TO VALVE QV027B (G-10)
14" ECB-6	160.7-1	D-351115-2	H-5	EG394	2A/Y/7	TESTED TO VALVE ~~QV025B (H-5)~~ QV026B
14" ECB-13	160.7-1	D-351118-1	E-6	EG046	2A/Y/7	FROM REDUCER TO RHR PUMP NO. 2

VISUAL EXAMINATION RECORD - VT2

Continued

DATA PACKAGE: Ref. 160.7-1

Work order 20001709 written to clean and check end cap on Q1E11V0083B.
Work order 20001710 written to clean and check end cap on Q1E11V0068D.
Work order 20001654 written to clean and check end cap on Q1E11V0065D.
Work order 20001711 written to clean and check end cap on Q1E11V0079B.
Work order 20001707 written to clean and check end cap on Q1E11V0070D.
These 5 items are Non-Code items and do not require reinspection.

Charles W. Dean 6/15/00

FIGURE 1

SUPPORT EXAMINATION RECORD VT-3

FARLEY NUCLEAR PLANT

SOUTHERN NUCLEAR OPERATING COMPANY

Plant/Unit	Line Number/Examination Area/Weld No.	Drawing Number	Sheet No.
FARLEY/1	Q1E11V024B	N/A	

Photos	Sketch	Resolution	Technique
___ Yes ___ B&W	___ Yes	✓ 1/32" Division (Scale)	✓ Direct
✓ No ___ Color	✓ No	___ 1/32" Line (Gray Card)	___ Video
			___ Remote

WO/WA 20001704

Procedure No. FNP-0-NDE-100.23

Revision No. 3

Examiner/Initial Sig. SCOTT R. ERICKSON / Scott R. Erickson — Level II

Examiner/Initial Sig. N/A — Level N/A

Date (Month-Day-Year) 4-1-00

Equipment	Lighting	Tools		
✓ Mirror	___ Ambient	✓ Scale	___ Depth Gauge	___ Level
___ Magnifier	✓ Flashlight	___ Micrometer	___ Comparator	___
___ CCTV	___ Droplight	___ Caliper	___ Weld Gauge	___

N/A SNUBBERS VT-3	SAT	UN-SAT	N/A
Loose Bolt or Pin Connections	___	___	___
Shaft Seal	___	___	___
Fluid Leakage	___	___	___
Fluid Tubing Condition	___	___	___
Shaft Cleanliness	___	___	___
Spherical Bearings	___	___	___
Cotter & Clevis Pins Intact	___	___	___
Other**	___	___	___

* Provide details on unsat areas by use of supplemental data sheet.

** Provide details on other areas examined.

✓ COMP. INTERNALS & MAT'L SURFACE VT-3	SAT	UN-SAT	N/A
Pitting	✓	___	___
Corrosion	✓	___	___
Erosion	✓	___	___
Foreign Material	✓	___	___
Gouged Parts	✓	___	___
Wear	✓	___	___
Evidence of Leakage	✓	___	___
Other Cracks**	___	___	✓

N/A HANGER & SUPPORTS VT-3	SAT	UN-SAT	N/A
Setting:	___	___	___
Hot ___ Cold ___	___	___	___
Misalignment	___	___	___
Damaged Members	___	___	___
Gouges	___	___	___
Arc Strikes	___	___	___
Grind Marks	___	___	___
Freedom of Movement	___	___	___
Other**	___	___	___

Comments EXAMINED FLANGE & GASKET SEATING SURFACE. EXAMINED (20) STUDS & (40) NUTS AFTER REMOVAL FROM VALVE BODY. NO VISIBLE WASTAGE OF CROSS SECTIONAL AREA OR THREADED SURFACES NOTED AT TIME OF EXAM. SRE 4-1-00

FIGURE 1

VISUAL EXAMINATION RECORED VT-1

FARLEY NUCLEAR PLANT

SOUTHERN NUCLEAR OPERATING COMPANY

Plant/Unit	Line Number/Examination Area/Weld No.	Drawing Number	Sheet No.
FARLEY 1/1	Q1E11V024B	N/A	

Photos	Sketch	Resolution	Technique
___ Yes ___ B&W	___ Yes	✓ 1/32" Division (Scale)	✓ Direct
✓ No ___ Color	✓ No	___ 1/32" Line (Gray Card)	___ Video
			___ Remote

WO/WA 20001704

Procedure No. FNP-0-NDE-100.21

Revision No. 1

Examiner/Initial SCOTT R. ERICKSON Sig. Scott R. Erickson Level II

Examiner/Initial Sig. N/A Level N/A

Date (Month-Day-Year) 4-1-00

Equipment	Lighting	Tools		
✓ Mirror	___ Ambient	✓ Scale	___ Depth Gauge	___ Level
___ Magnifier	✓ Flashlight	___ Micrometer	___ Comparator	___
___ CCTV	___ Droplight	___ Caliper	___ Weld Gauge	___

N/A WELDS & BASE MATERIAL VT-1	SAT	UN-SAT	N/A
Ground Blend Material	___	___	___
Undercut	___	___	___
Corrosion build-Up	___	___	___
Gouges	___	___	___
Evidence of Leakage	___	___	___
Arc Strikes	___	___	___
Cracks	___	___	___
Other **	___	___	

* Provide details on unsat areas by use of supplemental data sheet.

** Provide details on other areas examined

✓ BOLTS, STUDS, AND WASHERS VT-1	SAT	UN-SAT	N/A
Loose Members	___	___	✓
Cracks	✓	___	___
Corrosion	✓	___	___
Gouges	✓	___	___
Thread Damage	✓	___	___
Deformation	✓	___	___
Protective Coating	✓	___	___
Evidence of Leakage	___	___	✓
Other**	___	___	✓

Comments EXAMINED (20) STUDS & (40) NUTS AFTER REMOVAL FROM VALVE BODY. NO VISIBLE WASTAGE OF CROSS SECTIONAL AREA OR THREADED SURFACES NOTED AT TIME OF EXAM. SRE 4-1-00

FIGURE 1

SUPPORT EXAMINATION RECORD VT-3

FARLEY NUCLEAR PLANT

SOUTHERN NUCLEAR OPERATING COMPANY

Plant/Unit	Line Number/Examination Area/Weld No.	Drawing Number	Sheet No.
FARLEY / 1	Q1E11V026B	N/A	

Photos	Sketch	Resolution	Technique
___ Yes ___ B&W	___ Yes	✓ 1/32" Division (Scale)	✓ Direct
✓ No ___ Color	✓ No	___ 1/32" Line (Gray Card)	___ Video
			___ Remote

WO/WA	20001828
Procedure No.	FNP-0-NDE-100.23
Revision No.	3
Examiner/Initial Sig.	Scott R. Erickson / Scott R. Erickson
Level	II
Examiner/Initial Sig.	N/A
Level	N/A
Date (Month-Day-Year)	3-30-00

Equipment	Lighting	Tools		
✓ Mirror	___ Ambient	✓ Scale	___ Depth Gauge	___ Level
___ Magnifier	✓ Flashlight	___ Micrometer	___ Comparator	___
___ CCTV	___ Droplight	___ Caliper	___ Weld Gauge	___

N/A SNUBBERS VT-3	SAT	UN-SAT	N/A
Loose Bolt or Pin Connections	___	___	___
Shaft Seal	___	___	___
Fluid Leakage	___	___	___
Fluid Tubing Condition	___	___	___
Shaft Cleanliness	___	___	___
Spherical Bearings	___	___	___
Cotter & Clevis Pins Intact	___	___	___
Other**	___	___	___

* Provide details on unsat areas by use of supplemental data sheet.

** Provide details on other areas examined.

✓ COMP. INTERNALS & MAT'L SURFACE VT-3	SAT	UN-SAT	N/A
Pitting	✓	___	___
Corrosion	✓	___	___
Erosion	✓	___	___
Foreign Material	✓	___	___
Gouged Parts	✓	___	___
Wear	✓	___	___
Evidence of Leakage	✓	___	___
Other Cracks**	___	___	✓

MINOR SURFACE CORROSION NOTED ON NUTS. SRE 3-30-00

N/A HANGER & SUPPORTS VT-3	SAT	UN-SAT	N/A
Setting:	___	___	___
Hot ___ Cold ___	___	___	___
Misalignment	___	___	___
Damaged Members	___	___	___
Gouges	___	___	___
Arc Strikes	___	___	___
Grind Marks	___	___	___
Freedom of Movement	___	___	___
Other**	___	___	___

Comments EXAMINED FLANGE & GASKET SEATING SURFACE. EXAMINED (24) STUDS & (48) NUTS AFTER REMOVAL FROM VALVE BODY. NO VISIBLE WASTAGE OF CROSS SECTIONAL AREA OR THREADED SURFACES NOTED AT TIME OF EXAM SRE 3-30-00

SHARED

FIGURE 1

VISUAL EXAMINATION RECORED VT-1

FARLEY NUCLEAR PLANT

SOUTHERN NUCLEAR OPERATING COMPANY

Plant/Unit	Line Number/Examination Area/Weld No.	Drawing Number	Sheet No.
FARLEY 1	Q1E11V026B	N/A	

Photos	Sketch	Resolution	Technique
___ Yes ___ B&W	___ Yes	✓ 1/32" Division (Scale)	✓ Direct
✓ No ___ Color	✓ No	___ 1/32" Line (Gray Card)	___ Video
			___ Remote

WO/WA	20001828
Procedure No.	FNP-0-NDE-100.21
Revision No.	1
Examiner/Initial Sig.	SCOTT R. ERICKSON / Scott R. Erickson
Level	II
Examiner/Initial Sig.	N/A
Level	N/A
Date (Month-Day-Year)	3-30-00

Equipment	Lighting	Tools		
✓ Mirror	___ Ambient	✓ Scale	___ Depth Gauge	___ Level
___ Magnifier	✓ Flashlight	___ Micrometer	___ Comparator	___
___ CCTV	___ Droplight	___ Caliper	___ Weld Gauge	___

N/A WELDS & BASE MATERIAL VT-1	SAT	UN-SAT	N/A
Ground Blend Material	___	___	___
Undercut	___	___	___
Corrosion build-Up	___	___	___
Gouges	___	___	___
Evidence of Leakage	___	___	___
Arc Strikes	___	___	___
Cracks	___	___	___
Other **	___	___	___

* Provide details on unsat areas by use of supplemental data sheet.

** Provide details on other areas examined

✓ BOLTS, STUDS, AND WASHERS VT-1	SAT	UN-SAT	N/A
Loose Members	___	___	✓
Cracks	✓	___	___
Corrosion	✓	___	___
Gouges	✓	___	___
Thread Damage	✓	___	___
Deformation	✓	___	___
Protective Coating	___	___	✓
Evidence of Leakage	___	___	✓
Other**	___	___	✓

MINOR SURFACE CORROSION NOTED ON NUTS. SRE 3-30-00

Comments EXAMINED (24) STUDS & (48) NUTS AFTER REMOVAL FROM VALVE BODY. NO VISIBLE WASTAGE OF CROSS SECTIONAL AREA OR THREADED SURFACES NOTED AT TIME OF EXAM. SRE 3-30-00

FIGURE 1

SUPPORT EXAMINATION RECORD VT-3

FARLEY NUCLEAR PLANT

SOUTHERN NUCLEAR OPERATING COMPANY

Plant/Unit	Line Number/Examination Area/Weld No.	Drawing Number	Sheet No.
FARLEY 1	Q1E11V033B	N/A	

Photos	Sketch	Resolution	Technique
___ Yes ___ B&W	___ Yes	✓ 1/32" Division (Scale)	✓ Direct
✓ No ___ Color	✓ No	___ 1/32" Line (Gray Card)	___ Video
			___ Remote

WO/WA	20001831
Procedure No.	FNP-0-NDE-100.23
Revision No.	3
Examiner/Initial Sig.	SCOTT R. ERICKSON / Scott R. Erickson — Level II
Examiner/Initial Sig.	PAUL DILALLO / Paul Dilallo — Level II
Date (Month-Day-Year)	3-30-00

Equipment	Lighting	Tools		
✓ Mirror	___ Ambient	✓ Scale	___ Depth Gauge	___ Level
___ Magnifier	✓ Flashlight	___ Micrometer	___ Comparator	___
___ CCTV	___ Droplight	___ Caliper	___ Weld Gauge	___

N/A SNUBBERS VT-3	SAT	UN-SAT	N/A
Loose Bolt or Pin Connections	___	___	___
Shaft Seal	___	___	___
Fluid Leakage	___	___	___
Fluid Tubing Condition	___	___	___
Shaft Cleanliness	___	___	___
Spherical Bearings	___	___	___
Cotter & Clevis Pins Intact	___	___	___
Other**	___	___	___

* Provide details on unsat areas by use of supplemental data sheet.

** Provide details on other areas examined.

✓ COMP. INTERNALS & MAT'L SURFACE VT-3	SAT	UN-SAT	N/A
Pitting	✓	___	___
Corrosion	✓	___	___
Erosion	✓	___	___
Foreign Material	✓	___	___
Gouged Parts	✓	___	___
Wear	✓	___	___
Evidence of Leakage	___	___	✓
Other Cracks**	___	___	✓

MINOR TOOL MARKS ON STUDS & NUTS NOTED AT TIME OF EXAM SRE 3-30-00

N/A HANGER & SUPPORTS VT-3	SAT	UN-SAT	N/A
Setting:	___	___	___
Hot ___ Cold ___	___	___	___
Misalignment	___	___	___
Damaged Members	___	___	___
Gouges	___	___	___
Arc Strikes	___	___	___
Grind Marks	___	___	___
Freedom of Movement	___	___	___
Other**	___	___	___

Comments EXAMINED FLANGE & GASKET SEATING SURFACE. EXAMINED (12) STUDS & (24) NUTS AFTER REMOVAL FROM VALVE BODY. NO VISIBLE WASTAGE OF CROSS SECTIONAL AREA OR THREADED SURFACES NOTED AT TIME OF EXAM SRE 3-30-00

SHARED

FIGURE 1

VISUAL EXAMINATION RECORED VT-1

FARLEY NUCLEAR PLANT

SOUTHERN NUCLEAR OPERATING COMPANY

Plant/Unit	Line Number/Examination Area/Weld No.	Drawing Number	Sheet No.
FARLEY 1	Q1E11V033B	N/A	

Photos	Sketch	Resolution	Technique
___ Yes ___ B&W	___ Yes	✓ 1/32" Division (Scale)	✓ Direct
✓ No ___ Color	✓ No	___ 1/32" Line (Gray Card)	___ Video
			___ Remote

WO/WA	20001831
Procedure No.	FNP-0-NDE-100.21
Revision No.	1
Examiner/Initial Sig.	SCOTT R. ERICKSON Scott R. Erickson
Level	II
Examiner/Initial Sig.	N/A
Level	N/A
Date (Month-Day-Year)	3-30-00

Equipment	Lighting	Tools		
✓ Mirror	___ Ambient	✓ Scale	___ Depth Gauge	___ Level
___ Magnifier	✓ Flashlight	___ Micrometer	___ Comparator	___
___ CCTV	___ Droplight	___ Caliper	___ Weld Gauge	___

N/A WELDS & BASE MATERIAL VT-1	SAT	UN-SAT	N/A
Ground Blend Material	___	___	___
Undercut	___	___	___
Corrosion build-Up	___	___	___
Gouges	___	___	___
Evidence of Leakage	___	___	___
Arc Strikes	___	___	___
Cracks	___	___	___
Other **	___	___	___

* Provide details on unsat areas by use of supplemental data sheet.

** Provide details on other areas examined

✓ BOLTS, STUDS, AND WASHERS VT-1	SAT	UN-SAT	N/A
Loose Members	___	___	✓
Cracks	✓	___	___
Corrosion	✓	___	___
Gouges	✓	___	___
Thread Damage	✓	___	___
Deformation	✓	___	___
Protective Coating	___	___	✓
Evidence of Leakage	___	___	✓
Other**	___	___	✓

MINOR TOOL MARKS NOTED ON STUDS & NUTS
SRE 3-30-00

Comments EXAMINED (12) STUDS & (24) NUTS AFTER REMOVAL FROM VALVE BODY. NO VISIBLE WASTAGE OF CROSS SECTIONAL AREA OR THREADED SURFACES NOTED AT TIME OF EXAM. SRE 3-30-00

SHARED

FIGURE 1

VISUAL EXAMINATION RECORED VT-1

FARLEY NUCLEAR PLANT

SOUTHERN NUCLEAR OPERATING COMPANY

Plant/Unit	Line Number/Examination Area/Weld No.	Drawing Number	Sheet No.
FARLEY 1	Q1E11V032B	N/A	

Photos	Sketch	Resolution	Technique
___ Yes ___ B&W	___ Yes	✓ 1/32" Division (Scale)	✓ Direct
✓ No ___ Color	✓ No	___ 1/32" Line (Gray Card)	___ Video
			___ Remote

WO/WA 20001833

Procedure No. FNP-0-NDE-100.21

Revision No. 1

Examiner/Initial Sig. SCOTT R. ERICKSON / Scott R. Erickson — Level II

Examiner/Initial Sig. N/A — Level N/A

Date (Month-Day-Year) 3-22-00

Equipment	Lighting	Tools		
✓ Mirror	___ Ambient	✓ Scale	___ Depth Gauge	___ Level
___ Magnifier	✓ Flashlight	___ Micrometer	___ Comparator	___
___ CCTV	___ Droplight	___ Caliper	___ Weld Gauge	___

N/A WELDS & BASE MATERIAL VT-1	SAT	UN-SAT	N/A
Ground Blend Material	___	___	___
Undercut	___	___	___
Corrosion build-Up	___	___	___
Gouges	___	___	___
Evidence of Leakage	___	___	___
Arc Strikes	___	___	___
Cracks	___	___	___
Other **	___	___	___

* Provide details on unsat areas by use of supplemental data sheet.

** Provide details on other areas examined

✓ BOLTS, STUDS, AND WASHERS VT-1	SAT	UN-SAT	N/A
Loose Members	___	___	✓
Cracks	✓	___	___
Corrosion	✓*	___	___
Gouges	✓	___	___
Thread Damage	✓	___	___
Deformation	✓	___	___
Protective Coating	✓	___	___
Evidence of Leakage	___	___	✓
Other**	___	___	✓

* MINOR SURFACE CORROSION ON STUD SRE 3-22-00

Comments EXAMINED (2) STUDS & (4) NUTS (ALL BOLTING AFFECTED BY LEAKAGE) AFTER REMOVAL (ONE AT A TIME) FOR INSPECTION. NO VISIBLE WASTAGE OF CROSS SECTIONAL AREA OR THREAD SURFACES NOTED AT TIME OF EXAM. SRE 3-22-00

FIGURE 1

SUPPORT EXAMINATION RECORD VT-3

FARLEY NUCLEAR PLANT

SOUTHERN NUCLEAR OPERATING COMPANY

Plant/Unit	Line Number/Examination Area/Weld No.	Drawing Number	Sheet No.
FARLEY 1	Q1E11V032B	N/A	

Photos	Sketch	Resolution	Technique
___ Yes ___ B&W	___ Yes	✓ 1/32" Division (Scale)	✓ Direct
✓ No ___ Color	✓ No	___ 1/32" Line (Gray Card)	___ Video
			___ Remote

WO/WA 20001833	
Procedure No. FNP-0-NDE-100.23	
Revision No. 3	
Examiner/Initial Sig. SCOTT R. ERICKSON Scott R. Erickson	Level II
Examiner/Initial Sig. N/A	Level N/A
Date (Month-Day-Year) 3-22-00	

Equipment	Lighting	Tools		
✓ Mirror	___ Ambient	✓ Scale	___ Depth Gauge	___ Level
___ Magnifier	✓ Flashlight	___ Micrometer	___ Comparator	___
___ CCTV	___ Droplight	___ Caliper	___ Weld Gauge	___

N/A SNUBBERS VT-3	SAT	UN-SAT	N/A
Loose Bolt or Pin Connections	___	___	___
Shaft Seal	___	___	___
Fluid Leakage	___	___	___
Fluid Tubing Condition	___	___	___
Shaft Cleanliness	___	___	___
Spherical Bearings	___	___	___
Cotter & Clevis Pins Intact	___	___	___
Other**	___	___	___

* Provide details on unsat areas by use of supplemental data sheet.

** Provide details on other areas examined.

✓ COMP. INTERNALS & MAT'L SURFACE VT-3	SAT	UN-SAT	N/A
Pitting	✓	___	___
Corrosion	✓*	___	___
Erosion	✓	___	___
Foreign Material	✓	___	___
Gouged Parts	✓	___	___
Wear	✓	___	___
Evidence of Leakage	___	___	✓
Other Cracks**	___	___	✓

* MINOR SURFACE CORROSION ON STUDS SRE-3-22-00

N/A HANGER & SUPPORTS VT-3	SAT	UN-SAT	N/A
Setting:	___	___	___
Hot ___ Cold ___	___	___	___
Misalignment	___	___	___
Damaged Members	___	___	___
Gouges	___	___	___
Arc Strikes	___	___	___
Grind Marks	___	___	___
Freedom of Movement	___	___	___
Other**	___	___	___

Comments EXAMINED (2) STUDS & (4) NUTS (ALL BOLTING AFFECTED BY LEAKAGE) AFTER REMOVAL (ONE AT A TIME) FOR INSPECTION. NO VISIBLE WASTAGE OF CROSS SECTIONAL AREA OR THREAD SURFACES AT THE TIME OF EXAM. SRE 3-22-00

FIGURE 1

SUPPORT EXAMINATION RECORD VT-3

FARLEY NUCLEAR PLANT

SOUTHERN NUCLEAR OPERATING COMPANY

Plant/Unit	Line Number/Examination Area/Weld No.	Drawing Number	Sheet No.
FARLEY / 1	FLANGED SPOOL PIECE U/S OF 01E11P001B	N/A	

Photos	Sketch	Resolution	Technique
___ Yes ___ B&W	___ Yes	✓ 1/32" Division (Scale)	✓ Direct
✓ No ___ Color	✓ No	___ 1/32" Line (Gray Card)	___ Video
			___ Remote

WO/WA 20001835

Procedure No. FNP-0-NDE-100.23

Revision No. 3

Examiner/Initial Sig. SCOTT R. ERICKSON Scott R. Erickson — Level II

Examiner/Initial Sig. N/A — Level N/A

Date (Month-Day-Year) 3-28-00

Equipment	Lighting	Tools		
✓ Mirror	___ Ambient	✓ Scale	___ Depth Gauge	___ Level
___ Magnifier	✓ Flashlight	___ Micrometer	___ Comparator	___
___ CCTV	___ Droplight	___ Caliper	___ Weld Gauge	___

N/A SNUBBERS VT-3	SAT	UN-SAT	N/A
Loose Bolt or Pin Connections	___	___	___
Shaft Seal	___	___	___
Fluid Leakage	___	___	___
Fluid Tubing Condition	___	___	___
Shaft Cleanliness	___	___	___
Spherical Bearings	___	___	___
Cotter & Clevis Pins Intact	___	___	___
Other**	___	___	___

* Provide details on unsat areas by use of supplemental data sheet.

** Provide details on other areas examined.

✓ COMP. INTERNALS & MAT'L SURFACE VT-3	SAT	UN-SAT	N/A
Pitting	✓	___	___
Corrosion	✓	___	___
Erosion	✓	___	___
Foreign Material	✓	___	___
Gouged Parts	___	✓	___
Wear	✓	___	___
Evidence of Leakage	✓	___	___
Other Cracks**	___	___	✓

MINOR SURFACE CORROSION & TOOL MARKS ON STUDS & NUTS. SRE 3-28-00

N/A HANGER & SUPPORTS VT-3	SAT	UN-SAT	N/A
Setting:	___	___	___
Hot ___ Cold ___	___	___	___
Misalignment	___	___	___
Damaged Members	___	___	___
Gouges	___	___	___
Arc Strikes	___	___	___
Grind Marks	___	___	___
Freedom of Movement	___	___	___
Other**	___	___	___

Comments EXAMINED FLANGE & GASKET SEATING AREA- SEE PAGE 2 FOR UNSAT CONDITION, EXAMINED (40) STUDS & (88) NUTS AFTER REMOVAL FROM FLANGES. NO VISIBLE WASTAGE OF CROSS SECTIONAL AREA OR THREADED SURFACES NOTED AT TIME OF EXAM. SRE 3-28-00

FIGURE 3

VISUAL EXAMINATION SUPPLEMENTAL DATA SHEET

FARLEY NUCLEAR PLANT

SOUTHERN NUCLEAR OPERATING COMPANY

Plant/Unit	Line Number/Examination Area/Weld No.	Drawing Number	Sheet No.
FARLEY 1/1	2ND FLANGE U/S OF Q1E11P001B	N/A	

WO/WA No. 20001835	Date (Month-Day-Year)	Examiner	Level	Location
Procedure No. FNP-0-NDE-100.23				
Revision No. 3	3-28-00	Scott R. Erickson	II	A/B 77' ELEV. Rm 129

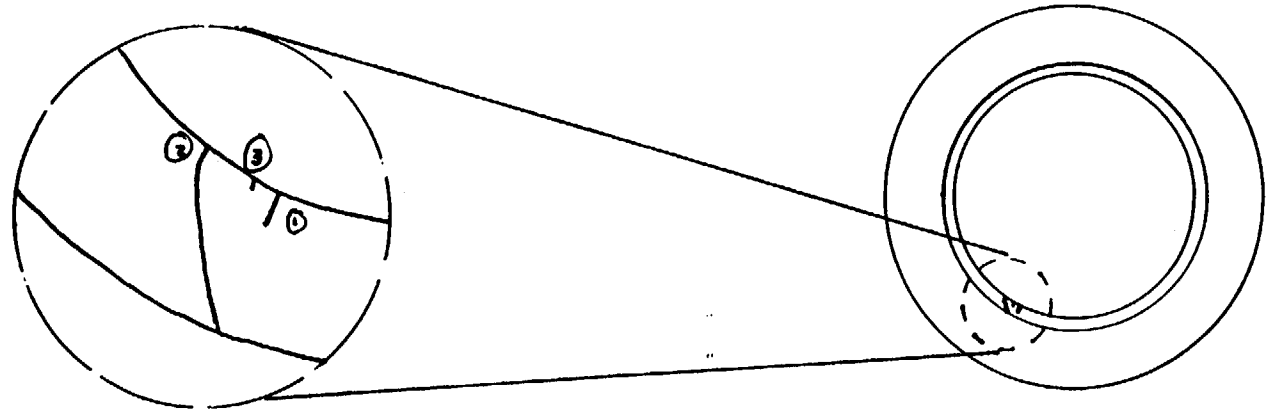

Comments: #1 - .5" LONG GOUGE APPROXIMATELY 1/16" DEEP

#2 - 2.6" LONG GOUGE APPROXIMATELY 1/32" DEEP TO 1/64" DEEP

#3 - .3" LONG GOUGE APPROXIMATELY 1/16" DEEP

Page 2 of 2

SHARED

FIGURE 1

VISUAL EXAMINATION RECORED VT-1

FARLEY NUCLEAR PLANT

SOUTHERN NUCLEAR OPERATING COMPANY

Plant/Unit	Line Number/Examination Area/Weld No.	Drawing Number	Sheet No.
FARLEY /1	FLANGED SPOOL PIECE U/S OF Q1E11P001B	N/A	

Photos	Sketch	Resolution	Technique
___ Yes ___ B&W	___ Yes	✓ 1/32" Division (Scale)	✓ Direct
✓ No ___ Color	✓ No	___ 1/32" Line (Gray Card)	___ Video
			___ Remote

WO/WA	20001835
Procedure No.	FNP-0-NDE-100.21
Revision No.	1
Examiner/Initial Sig.	SCOTT R. ERICKSON / Scott R. Erickson
Level	II
Examiner/Initial Sig.	N/A
Level	N/A
Date (Month-Day-Year)	3-28-00

Equipment	Lighting	Tools		
✓ Mirror	___ Ambient	✓ Scale	___ Depth Gauge	___ Level
___ Magnifier	✓ Flashlight	___ Micrometer	___ Comparator	___
___ CCTV	___ Droplight	___ Caliper	___ Weld Gauge	___

N/A **WELDS & BASE MATERIAL VT-1**

	SAT	UN-SAT	N/A
Ground Blend Material	___	___	___
Undercut	___	___	___
Corrosion build-Up	___	___	___
Gouges	___	___	___
Evidence of Leakage	___	___	___
Arc Strikes	___	___	___
Cracks	___	___	___
Other **	___	___	___

* Provide details on unsat areas by use of supplemental data sheet.

** Provide details on other areas examined

✓ **BOLTS, STUDS, AND WASHERS VT-1**

	SAT	UN-SAT	N/A
Loose Members	___	___	✓
Cracks	✓	___	___
Corrosion	✓*	___	___
Gouges	✓	___	___
Thread Damage	✓*	___	___
Deformation	✓	___	___
Protective Coating	✓	___	___
Evidence of Leakage	___	___	✓
Other**	___	___	✓

* MINOR SURFACE CORROSION & TOOL MARKS ON STUDS AND NUTS SRE 3-28-00

Comments EXAMINED (40) STUDS & (80) NUTS AFTER REMOVAL FROM FLANGES. NO VISIBLE WASTAGE OF CROSS SECTIONAL AREA OR THREADED SURFACES NOTED AT TIME OF EXAM. SRE 3-28-00

FIGURE 1

SUPPORT EXAMINATION RECORD VT-3

FARLEY NUCLEAR PLANT

SOUTHERN NUCLEAR OPERATING COMPANY

Plant/Unit	Line Number/Examination Area/Weld No.	Drawing Number	Sheet No.
FARLEY 1/1	FLANGE U/S OF Q1E11P001B	N/A	

Photos	Sketch	Resolution	Technique
___ Yes ___ B&W	___ Yes	✓ 1/32" Division (Scale)	✓ Direct
✓ No ___ Color	✓ No	___ 1/32" Line (Gray Card)	___ Video
			___ Remote

WO/WA	20001835
Procedure No.	FNP-0-NDE-100.23
Revision No.	3
Examiner/Initial Sig.	[signature] Level II
Examiner/Initial Sig.	N/A Level N/A
Date (Month-Day-Year)	4-6-00

Equipment	Lighting	Tools		
✓ Mirror	___ Ambient	✓ Scale	___ Depth Gauge	___ Level
___ Magnifier	✓ Flashlight	___ Micrometer	___ Comparator	___
___ CCTV	___ Droplight	___ Caliper	___ Weld Gauge	___

N/A SNUBBERS VT-3	SAT	UN-SAT	N/A
Loose Bolt or Pin Connections	___	___	___
Shaft Seal	___	___	___
Fluid Leakage	___	___	___
Fluid Tubing Condition	___	___	___
Shaft Cleanliness	___	___	___
Spherical Bearings	___	___	___
Cotter & Clevis Pins Intact	___	___	___
Other**	___	___	___

* Provide details on unsat areas by use of supplemental data sheet.

** Provide details on other areas examined.

X COMP. INTERNALS & MAT'L SURFACE VT-3	SAT	UN-SAT	N/A
Pitting	✓	___	___
Corrosion	✓	___	___
Erosion	✓	___	___
Foreign Material	✓	___	___
Gouged Parts	✓	___	___
Wear	✓	___	___
Evidence of Leakage	___	___	✓
Other Cracks**	___	___	✓

N/A HANGER & SUPPORTS VT-3	SAT	UN-SAT	N/A
Setting:	___	___	___
Hot ___ Cold ___	___	___	___
Misalignment	___	___	___
Damaged Members	___	___	___
Gouges	___	___	___
Arc Strikes	___	___	___
Grind Marks	___	___	___
Freedom of Movement	___	___	___
Other**	___	___	___

Comments EXAMINED FLANGE & GASKET SEATING AREA AFTER MACHINING OF SURFACE

SHARED

FIGURE 1

VISUAL EXAMINATION RECORED VT-1

FARLEY NUCLEAR PLANT

SOUTHERN NUCLEAR OPERATING COMPANY

Plant/Unit	Line Number/Examination Area/Weld No.	Drawing Number	Sheet No.
FARLEY /1	Q1E11 H0001B	N/A	

Photos	Sketch	Resolution	Technique
___ Yes ___ B&W ✓ No ___ Color	___ Yes ✓ No	✓ 1/32" Division (Scale) ___ 1/32" Line (Gray Card)	✓ Direct ___ Video ___ Remote

WO/WA	M20001765
Procedure No.	FNP-0-NDE-100.21
Revision No.	1
Examiner/Initial Sig.	M. GRELL / Manuel Grell
Level	II
Examiner/Initial Sig.	N/A
Level	
Date (Month-Day-Year)	3/17/00

Equipment	Lighting	Tools		
✓ Mirror	___ Ambient	✓ Scale	___ Depth Gauge	___ Level
___ Magnifier	✓ Flashlight	___ Micrometer	___ Comparator	
___ CCTV	___ Droplight	___ Caliper	___ Weld Gauge	

N/A WELDS & BASE MATERIAL VT-1	SAT	UN-SAT	N/A
Ground Blend Material	___	___	___
Undercut	___	___	___
Corrosion build-Up	___	___	___
Gouges	___	___	___
Evidence of Leakage	___	___	___
Arc Strikes	___	___	___
Cracks	___	___	___
Other **	___	___	___

* Provide details on unsat areas by use of supplemental data sheet.

** Provide details on other areas examined

✓ BOLTS, STUDS, AND WASHERS VT-1	SAT	UN-SAT	N/A
Loose Members	___	___	✓
Cracks	✓	___	___
Corrosion	✓*	___	___
Gouges	✓*	___	___
Thread Damage	✓*	___	___
Deformation	✓	___	___
Protective Coating	✓	___	___
Evidence of Leakage	___	___	✓
Other**	___	___	✓

* minor surface corrosion & tool marks noted MS 3-17-00

Comments examined (1) Stud after removal for inspection. No Visible wastage of cross sectional area or threaded surfaces noted @ time of exam. MS 3/17/00

FIGURE 1

SUPPORT EXAMINATION RECORD VT-3

FARLEY NUCLEAR PLANT

SOUTHERN NUCLEAR OPERATING COMPANY

Plant/Unit	Line Number/Examination Area/Weld No.	Drawing Number	Sheet No.
FARLEY/1	Q1E11H0001B	N/A	

Photos	Sketch	Resolution	Technique
___ Yes ___ B&W	___ Yes	✓ 1/32" Division (Scale)	✓ Direct
✓ No ___ Color	✓ No	___ 1/32" Line (Gray Card)	___ Video
			___ Remote

WO/WA	M 2000 1765
Procedure No.	FNP-0-NDE-100.23
Revision No.	3
Examiner/Initial Sig.	M. GRELL Manfred Grell — Level II
Examiner/Initial Sig.	N/A — Level
Date (Month-Day-Year)	3/17/00

Equipment	Lighting	Tools		
✓ Mirror	___ Ambient	✓ Scale	___ Depth Gauge	___ Level
___ Magnifier	✓ Flashlight	___ Micrometer	___ Comparator	___
___ CCTV	___ Droplight	___ Caliper	___ Weld Gauge	___

N/A SNUBBERS VT-3	SAT	UN-SAT	N/A
Loose Bolt or Pin Connections	___	___	___
Shaft Seal	___	___	___
Fluid Leakage	___	___	___
Fluid Tubing Condition	___	___	___
Shaft Cleanliness	___	___	___
Spherical Bearings	___	___	___
Cotter & Clevis Pins Intact	___	___	___
Other**	___	___	___

* Provide details on unsat areas by use of supplemental data sheet.

** Provide details on other areas examined.

✓ COMP. INTERNALS & MAT'L SURFACE VT-3	SAT	UN-SAT	N/A
Pitting	✓	___	___
Corrosion	✓	___	___
Erosion	✓	___	___
Foreign Material	✓	___	___
Gouged Parts	✓	___	___
Wear	✓	___	___
Evidence of Leakage	___	___	✓
Other Cracks**	___	___	✓

N/A HANGER & SUPPORTS VT-3	SAT	UN-SAT	N/A
Setting:	___	___	___
Hot ___ Cold ___	___	___	___
Misalignment	___	___	___
Damaged Members	___	___	___
Gouges	___	___	___
Arc Strikes	___	___	___
Grind Marks	___	___	___
Freedom of Movement	___	___	___
Other**	___	___	___

Comments minor surface corrosion and tool marks noted on the (1) STud removed for inspection no visible wastage of cross sectional area or threaded surfaces noted @ time of exam MG 3/17/00

RHR HEAT EXCHANGER Q1E11H0001B
PRESSURE TEST AND BOLTED CONNECTION INSPECTION

The ASME Code required Pressure Test was accomplished during the 1R16 refueling outage. A slight amount of boron buildup was noted in the lower quadrant around the heat exchanger head-to-tubesheet gasket. The boron buildup was dry and no evidence of an active leak was noted. The area around the gasket and bolting was cleaned, and as much of the boron buildup as possible was removed without disassembly of the heat exchanger. A small amount of boron residue could not be removed with the heat exchanger intact. The stud in the vicinity of maximum boron buildup was removed and VT-3/VT-1 examined for evidence of corrosion. No evidence of wastage or any other corrosion mechanism was observed during the visual examination. The stud was reinstalled in the heat exchanger.

The head-to-tubesheet bolting for Heat Exchanger Q1E11H001B will be given the Code required visual examination for evidence of corrosion in conjunction with the next Code required Pressure Test in approximately 40 months during the next ISI Period.

Prepared by: Charles W. Dean
May 15, 2000

Approved by: David B. Hartline
May 15, 2000

FIGURE 1

VISUAL EXAMINATION RECORD - VT2

FARLEY NUCLEAR PLANT

SOUTHERN NUCLEAR OPERATING COMPANY

Plant/Unit FARLEY /1	Data Package REF. 160.8-5	Drawing Number D-351116 SHT. 1
WO(WA) No. W00600211	SystemBoundaries	
Procedure No.FNP-0-NDE-100.22		
Revision No. 2	THE CVCS RETURN TO LETDOWN HEAT EXCHANGER PIPING WAS EXAMINED IN SERVICE UNDER NORMAL OPERATING CONDITIONS. SEE ATTACHED SHEET FOR THE SYSTEM BOUNDARIES. THE EXAMINATION INCLUDED ALL VENTS, DRAINS, INSTRUMENT LINES AND TEST CONNECTIONS WITHIN THE SYSTEM BOUNDARIES. INSULATION WAS REMOVED TO ALLOW FOR EXAMINATION OF BOLTED CONNECTIONS.	
Examiner Scott R. Erickson — Level II		
Examiner N/A — Level N/A		
Date (Month-Day-Year) 3-4-00		
SKETCH	N/A	

Examination (Per Para. 7.5)

_____ Sat ✓ *Unsat

*Provide details on unsat areas 01E21V565B - LIGHT DRY BORON BUILD-UP ON GASKET AREA. THE REMAINDER OF THE SYSTEM WAS SAT.

Comments

SHARED

FIGURE 1

VISUAL EXAMINATION RECORED VT-1

FARLEY NUCLEAR PLANT

SOUTHERN NUCLEAR OPERATING COMPANY

Plant/Unit FARLEY 1	Line Number/Examination Area/Weld No. Q1E21Y0565B	Drawing Number N/A	Sheet No.

Photos	Sketch	Resolution	Technique
___ Yes ___ B&W	___ Yes	✓ 1/32" Division (Scale)	✓ Direct
✓ No ___ Color	✓ No	___ 1/32" Line (Gray Card)	___ Video
			___ Remote

WO/WA	M20001663
Procedure No.	FNP-0-NDE-100.21
Revision No.	1
Examiner/Initial Sig.	M. Grell / Maurice Grell
Level	II
Examiner/Initial Sig.	N/A
Level	
Date (Month-Day-Year)	3-19-00

Equipment	Lighting	Tools		
✓ Mirror	___ Ambient	✓ Scale	___ Depth Gauge	___ Level
___ Magnifier	✓ Flashlight	___ Micrometer	___ Comparator	
___ CCTV	___ Droplight	___ Caliper	___ Weld Gauge	

N/A WELDS & BASE MATERIAL VT-1	SAT	UN-SAT	N/A
Ground Blend Material	___	___	___
Undercut	___	___	___
Corrosion build-Up	___	___	___
Gouges	___	___	___
Evidence of Leakage	___	___	___
Arc Strikes	___	___	___
Cracks	___	___	___
Other **	___	___	___

* Provide details on unsat areas by use of supplemental data sheet.

** Provide details on other areas examined

✓ BOLTS, STUDS, AND WASHERS VT-1	SAT	UN-SAT	N/A
Loose Members	___	___	✓
Cracks	✓	___	___
Corrosion	✓	___	___
Gouges	✓	___	___
Thread Damage	✓	___	___
Deformation	✓	___	___
Protective Coating	✓	___	___
Evidence of Leakage	___	___	✓
Other**	___	___	✓

Note minor tool marks on studs & Nuts

Comments Examined 8 Studs after removal from Valve Body - STUDS SAT REJECTED (1) NUT (7) SAT
examined (1) New Nut to replace rejected Nut. New Nut SAT MWS 3-19-00

FIGURE 1

SUPPORT EXAMINATION RECORD VT-3

FARLEY NUCLEAR PLANT

SOUTHERN NUCLEAR OPERATING COMPANY

Plant/Unit	Line Number/Examination Area/Weld No.	Drawing Number	Sheet No.
FARLEY 1	Q1E 21V 0565B	N/A	

Photos	Sketch	Resolution	Technique
___ Yes ___ B&W	___ Yes	✓ 1/32" Division (Scale)	✓ Direct
✓ No ___ Color	✓ No	___ 1/32" Line (Gray Card)	___ Video
			___ Remote

WO/WA	M 2000 1663
Procedure No.	FNP-0-NDE-100.23
Revision No.	3
Examiner/Initial Sig.	M. GRELL Manfred Grell
Level	II
Examiner/Initial Sig.	
Level	
Date (Month-Day-Year)	3-19-00

Equipment	Lighting	Tools		
✓ Mirror	___ Ambient	✓ Scale	___ Depth Gauge	___ Level
___ Magnifier	✓ Flashlight	___ Micrometer	___ Comparator	
___ CCTV	___ Droplight	___ Caliper	___ Weld Gauge	

N/A SNUBBERS VT-3	SAT	UN-SAT	N/A
Loose Bolt or Pin Connections			
Shaft Seal			
Fluid Leakage			
Fluid Tubing Condition			
Shaft Cleanliness			
Spherical Bearings			
Cotter & Clevis Pins Intact			
Other**			

* Provide details on unsat areas by use of supplemental data sheet.

** Provide details on other areas examined.

✓ COMP. INTERNALS & MAT'L SURFACE VT-3	SAT	UN-SAT	N/A
Pitting	✓		
Corrosion	✓		
Erosion	✓		
Foreign Material	✓		
Gouged Parts	✓		
Wear	✓		
Evidence of Leakage	✓		
Other Cracks**			✓

minor tool mark noted on all existing Nuts & Studs

N/A HANGER & SUPPORTS VT-3	SAT	UN-SAT	N/A
Setting:			
Hot ___ Cold ___			
Misalignment			
Damaged Members			
Gouges			
Arc Strikes			
Grind Marks			
Freedom of Movement			
Other**			

Comments: examined all bolting in decon room 8 Studs sat 7 nuts Sat - Unsat nut replaced New NUT examined prior to installation also sat MG 3-19-00

SHARED

FIGURE 1

VISUAL EXAMINATION RECORD - VT2

FARLEY NUCLEAR PLANT

SOUTHERN NUCLEAR OPERATING COMPANY

Plant/Unit FARLEY/1		Data Package REF. 160.2-2	Drawing Number D-351116 SHT. 1
WO(WA) No. W006002 11		SystemBoundaries	
Procedure No.FNP-0-NDE-100.22			
Revision No. 2		THE CVCS CHARGING PIPING WAS EXAMINED IN SERVICE UNDER NORMAL OPERATING CONDITIONS. SEE ATTACHED SHEET FOR THE SYSTEM BOUNDARIES. THE EXAMINATION INCLUDED ALL VENTS, DRAINS, INSTRUMENT LINES AND TEST CONNECTIONS WITHIN THE SYSTEM BOUNDARIES. INSULATION WAS REMOVED FROM BOLTED CONNECTIONS TO ALLOW FOR INSPECTIONS.	
Examiner Scott R. Erickson	Level II		
Examiner N/A	Level N/A		
Date (Month-Day-Year) 3-4-00			
SKETCH		N A	

Examination (Per Para. 7.5)

_____ Sat ✓ *Unsat

*Provide details on unsat areas Q1E21V119 - LIGHT DRY BORON BUILD-UP ON GASKET AREA. THE REMAINDER OF THE SYSTEM WAS SAT.

Comments

SHEET 1 of 2

FIGURE 1

SUPPORT EXAMINATION RECORD VT-3

FARLEY NUCLEAR PLANT

SOUTHERN NUCLEAR OPERATING COMPANY

Plant/Unit	Line Number/Examination Area/Weld No.	Drawing Number	Sheet No.
FARLEY 1	Q1E21V119	N/A	

Photos	Sketch	Resolution	Technique
___ Yes ___ B&W	___ Yes	✓ 1/32" Division (Scale)	✓ Direct
✓ No ___ Color	✓ No	___ 1/32" Line (Gray Card)	___ Video
			___ Remote

(WO)/WA	2000 1664
Procedure No.	FNP-0-NDE-100.23
Revision No.	3
Examiner/Initial Sig.	SCOTT R. ERICKSON / Scott R. Erickson
Level	II
Examiner/Initial Sig.	N/A
Level	N/A
Date (Month-Day-Year)	3-18-00

Equipment	Lighting	Tools		
✓ Mirror	___ Ambient	✓ Scale	___ Depth Gauge	___ Level
___ Magnifier	✓ Flashlight	___ Micrometer	___ Comparator	___
___ CCTV	___ Droplight	___ Caliper	___ Weld Gauge	___

N/A SNUBBERS VT-3	SAT	UN-SAT	N/A
Loose Bolt or Pin Connections	___	___	___
Shaft Seal	___	___	___
Fluid Leakage	___	___	___
Fluid Tubing Condition	___	___	___
Shaft Cleanliness	___	___	___
Spherical Bearings	___	___	___
Cotter & Clevis Pins Intact	___	___	___
Other**	___	___	___

* Provide details on unsat areas by use of supplemental data sheet.

** Provide details on other areas examined.

✓ COMP. INTERNALS & MAT'L SURFACE VT-3	SAT	UN-SAT	N/A
Pitting	✓	___	___
Corrosion	✓	___	___
Erosion	✓	___	___
Foreign Material	✓	___	___
Gouged Parts	✓	___	___
Wear	✓	___	___
Evidence of Leakage	✓	___	___
Other Cracks**	✓	___	___

NOTE: NO VISIBLE WASTAGE OF CROSS SECTIONAL AREA OR THREAD SURFACES NOTED. SRE 3-18-00

N/A HANGER & SUPPORTS VT-3	SAT	UN-SAT	N/A
Setting:	___	___	___
Hot ___ Cold ___	___	___	___
Misalignment	___	___	___
Damaged Members	___	___	___
Gouges	___	___	___
Arc Strikes	___	___	___
Grind Marks	___	___	___
Freedom of Movement	___	___	___
Other**	___	___	___

Comments EXAMINED GASKET MATING SURFACES AND ASSOCIATED STUDS (12). 11 IN PLACE, 1 REMOVED FROM VALVE BODY. NO ABNORMALITIES NOTED AT TIME OF EXAM. SRE 3-18-00

SHARED

FNP-0-NDE-100.21
RTYPE: L1.09

FIGURE 1

VISUAL EXAMINATION RECORED VT-1

FARLEY NUCLEAR PLANT

SOUTHERN NUCLEAR OPERATING COMPANY

Plant/Unit	Line Number/Examination Area/Weld No.	Drawing Number	Sheet No.
FARLEY/1	Q1E21V119	N/A	

Photos	Sketch	Resolution	Technique
___ Yes ___ B&W	___ Yes	✓ 1/32" Division (Scale)	✓ Direct
✓ No ___ Color	✓ No	___ 1/32" Line (Gray Card)	___ Video
			___ Remote

WO/WA 20001664
Procedure No. FNP-0-NDE-100.21
Revision No. 1
Examiner/Initial Sig. SCOTT R. ERICKSON Scott R. Erickson — Level II
Examiner/Initial Sig. N/A — Level N/A
Date (Month-Day-Year) 3-18-00

Equipment	Lighting	Tools		
✓ Mirror	___ Ambient	✓ Scale	___ Depth Gauge	___ Level
___ Magnifier	✓ Flashlight	___ Micrometer	___ Comparator	___
___ CCTV	___ Droplight	___ Caliper	___ Weld Gauge	___

N/A **WELDS & BASE MATERIAL VT-1**

	SAT	UN-SAT	N/A
Ground Blend Material	___	___	___
Undercut	___	___	___
Corrosion build-Up	___	___	___
Gouges	___	___	___
Evidence of Leakage	___	___	___
Arc Strikes	___	___	___
Cracks	___	___	___
Other **	___	___	___

* Provide details on unsat areas by use of supplemental data sheet.
** Provide details on other areas examined

✓ **BOLTS, STUDS, AND WASHERS VT-1**

	SAT	UN-SAT	N/A
Loose Members	___	___	✓
Cracks	✓	___	___
Corrosion	✓*	___	___
Gouges	✓*	___	___
Thread Damage	✓*	___	___
Deformation	✓	___	___
Protective Coating	✓	___	___
Evidence of Leakage	___	___	✓
Other**	___	___	✓

* MINOR SURFACE CORROSION AND TOOL MARKS NOTED. SRE 3-18-00

Comments EXAMINED (12) STUDS TOTAL (11) IN PLACE, (1) REMOVED FROM VALVE BODY. NO ABNORMALITIES OR VISIBLE WASTAGE OF CROSS SECTIONAL AREA OR THREADED SURFACES NOTED AT TIME OF EXAM. SRE 3-18-00

SHARED

FIGURE 1

VISUAL EXAMINATION RECORD - VT2

FARLEY NUCLEAR PLANT

SOUTHERN NUCLEAR OPERATING COMPANY

Plant/Unit FARLEY /1	Data Package REF. 160.5-1 / Drawing Number D-351116 SHT. 1
WO/WA No. W006002211	SystemBoundaries
Procedure No.FNP-0-NDE-100.22	
Revision No. 2	THE NORMAL LETDOWN PIPING WAS EXAMINED
Examiner Scott R. Erickson / Level II	IN SERVICE UNDER NORMAL OPERATING CONDITIONS.
Examiner N/A / Level N/A	SEE ATTACHED SHEET FOR THE SYSTEM BOUNDARIES.
Date (Month-Day-Year) 3-4-00	THE EXAMINATION INCLUDED ALL VENTS, DRAINS, INSTR-
SKETCH	UMENT LINES AND TEST CONNECTIONS WITHIN THE
	SYSTEM BOUNDARIES. INSULATION WAS REMOVED FROM
	BOLTED CONNECTIONS TO ALLOW FOR INSPECTIONS.
	N/A

Examination (Per Para. 7.5)

____ Sat ✓ *Unsat

*Provide details on unsat areas (1) Q1E21V253A - LIGHT DRY BORON BUILD-UP ON GASKET (2) Q1E21V253B - LIGHT DRY BORON BUILD-UP ON STEM (3) Q1E21V253C - MODERATE DRY BORON BUILD-UP ON GASKET. THE REMAINDER OF THE SYSTEM WAS SAT.

Comments MW02000633 written to clean valve stem and adjust packing for Q1E21V253B. Not a Code item. Reinspection not required. Charles W. Dean 5/15/00

SHARED

FIGURE 1

VISUAL EXAMINATION RECORED VT-1

FARLEY NUCLEAR PLANT

SOUTHERN NUCLEAR OPERATING COMPANY

Plant/Unit	Line Number/Examination Area/Weld No.	Drawing Number	Sheet No.
FARLEY Farley 1	Q1E21V0253A	N/A	

Photos	Sketch	Resolution	Technique
___ Yes ___ B&W ✓ No ___ Color	___ Yes ✓ No	✓ 1/32" Division (Scale) ___ 1/32" Line (Gray Card)	✓ Direct ___ Video ___ Remote

WO/WA	20001665
Procedure No.	FNP-0-NDE-100.21
Revision No.	1
Examiner/Initial Sig.	M. GRELL Manfred Grell
Level	II
Examiner/Initial Sig.	N/A
Level	
Date (Month-Day-Year)	3/17/00

Equipment	Lighting	Tools		
✓ Mirror	___ Ambient	✓ Scale	___ Depth Gauge	___ Level
___ Magnifier	✓ Flashlight	___ Micrometer	___ Comparator	___
___ CCTV	___ Droplight	___ Caliper	___ Weld Gauge	___

N/A **WELDS & BASE MATERIAL VT-1**

	SAT	UN-SAT	N/A
Ground Blend Material	___	___	___
Undercut	___	___	___
Corrosion build-Up	___	___	___
Gouges	___	___	___
Evidence of Leakage	___	___	___
Arc Strikes	___	___	___
Cracks	___	___	___
Other **	___	___	___

* Provide details on unsat areas by use of supplemental data sheet.

** Provide details on other areas examined

✓ **BOLTS, STUDS, AND WASHERS VT-1**

	SAT	UN-SAT	N/A
Loose Members	___	___	✓
Cracks	✓	___	___
Corrosion	✓	___	___
Gouges	✓	___	___
Thread Damage	✓	___	___
Deformation	✓	___	___
Protective Coating	✓	___	___
Evidence of Leakage	___	___	✓
Other**	___	___	___

Note:
STUD Selected for removal was STUD most directly in Boration flowpath

Comments examined (1) STUD after removal from Valve body. examined (5) STUDS 1/P. no visible wastage of cross sectional area or threaded surfaces noted @ time of exam. MG 3/17/00

FIGURE 1

SUPPORT EXAMINATION RECORD VT-3

FARLEY NUCLEAR PLANT

SOUTHERN NUCLEAR OPERATING COMPANY

Plant/Unit	Line Number/Examination Area/Weld No.	Drawing Number	Sheet No.
FARLEY 1	Q1E21V0253A	N/A	

Photos	Sketch	Resolution	Technique
___ Yes ___ B&W	___ Yes	✓ 1/32" Division (Scale)	✓ Direct
✓ No ___ Color	✓ No	___ 1/32" Line (Gray Card)	___ Video
			___ Remote

WO/WA	20001665
Procedure No.	FNP-0-NDE-100.23
Revision No.	1
Examiner/Initial Sig.	M. GRELL / Mark-d Grell — Level II
Examiner/Initial Sig.	N/A — Level
Date (Month-Day-Year)	3/17/00

Equipment	Lighting	Tools		
✓ Mirror	___ Ambient	✓ Scale	___ Depth Gauge	___ Level
___ Magnifier	✓ Flashlight	___ Micrometer	___ Comparator	___
___ CCTV	___ Droplight	___ Caliper	___ Weld Gauge	___

N/A SNUBBERS VT-3	SAT	UN-SAT	N/A
Loose Bolt or Pin Connections	___	___	___
Shaft Seal	___	___	___
Fluid Leakage	___	___	___
Fluid Tubing Condition	___	___	___
Shaft Cleanliness	___	___	___
Spherical Bearings	___	___	___
Cotter & Clevis Pins Intact	___	___	___
Other**	___	___	___

* Provide details on unsat areas by use of supplemental data sheet.

** Provide details on other areas examined.

✓ COMP. INTERNALS & MAT'L SURFACE VT-3	SAT	UN-SAT	N/A
Pitting	✓	___	___
Corrosion	✓*	___	___
Erosion	✓	___	___
Foreign Material	✓	___	___
Gouged Parts	✓	___	___
Wear	✓	___	___
Evidence of Leakage	✓	___	___
Other Cracks**	___	___	✓

___ HANGER & SUPPORTS VT-3	SAT	UN-SAT	N/A
Setting:	___	___	___
Hot ___ Cold ___	___	___	___
Misalignment	___	___	___
Damaged Members	___	___	___
Gouges	___	___	___
Arc Strikes	___	___	___
Grind Marks	___	___	___
Freedom of Movement	___	___	___
Other**	___	___	___

Comments: Only minor surface corrosion and tool marks noted on value bolting - examined Gasket Seating surfaces and (5) Bolts inplace. examined (1) Bolt after removal from Value Body. Bolt selected was bolt most directly in boration flow path. no visible wastage of cross sectional area or threaded surfaces noted. MJD 3/17/00

SHARED

FIGURE 1

SUPPORT EXAMINATION RECORD VT-3

FARLEY NUCLEAR PLANT

SOUTHERN NUCLEAR OPERATING COMPANY

Plant/Unit	Line Number/Examination Area/Weld No.	Drawing Number	Sheet No.
FARLEY 1	Q1E21V0253C	N/A	

Photos	Sketch	Resolution	Technique
___ Yes ___ B&W ✓ No ___ Color	___ Yes ✓ No	✓ 1/32" Division (Scale) ___ 1/32" Line (Gray Card)	✓ Direct ___ Video ___ Remote

WO/WA	20001666
Procedure No.	FNP-0-NDE-100.23
Revision No.	3
Examiner/Initial Sig.	M. GRELL Mark d Grell — Level II
Examiner/Initial Sig.	N/A — Level
Date (Month-Day-Year)	3-18-00

Equipment	Lighting	Tools		
✓ Mirror	___ Ambient	✓ Scale	___ Depth Gauge	___ Level
___ Magnifier	✓ Flashlight	___ Micrometer	___ Comparator	
___ CCTV	___ Droplight	___ Caliper	___ Weld Gauge	

N/A SNUBBERS VT-3	SAT	UN-SAT	N/A
Loose Bolt or Pin Connections			
Shaft Seal			
Fluid Leakage			
Fluid Tubing Condition			
Shaft Cleanliness			
Spherical Bearings			
Cotter & Clevis Pins Intact			
Other**			

* Provide details on unsat areas by use of supplemental data sheet.

** Provide details on other areas examined.

✓ COMP. INTERNALS & MAT'L SURFACE VT-3	SAT	UN-SAT	N/A
Pitting	✓		
Corrosion	✓		
Erosion	✓		
Foreign Material	✓		
Gouged Parts	✓		
Wear	✓		
Evidence of Leakage	✓		
Other Cracks**	✓		

Note No Visible wastage of cross sectional area or thread surfaces noted. MD 3/18/00

N/A HANGER & SUPPORTS VT-3	SAT	UN-SAT	N/A
Setting:			
Hot ___ Cold ___			
Misalignment			
Damaged Members			
Gouges			
Arc Strikes			
Grind Marks			
Freedom of Movement			
Other**			

Comments examined Gasket mating surfaces and associated STUDS (6). 2 in place 4 removed from Value Body. No Abnormalities noted @ time of exam. MY 3/18/00

SHARED

FIGURE 1

VISUAL EXAMINATION RECORED VT-1

FARLEY NUCLEAR PLANT

SOUTHERN NUCLEAR OPERATING COMPANY

Plant/Unit	Line Number/Examination Area/Weld No.	Drawing Number	Sheet No.
FARLEY 1	Q1E21V0253C	N/A	

Photos	Sketch	Resolution	Technique
___ Yes ___ B&W	___ Yes	✓ 1/32" Division (Scale)	✓ Direct
✓ No ___ Color	✓ No	___ 1/32" Line (Gray Card)	___ Video
			___ Remote

WO/WA	20001666
Procedure No.	FNP-0-NDE-100.21
Revision No.	1
Examiner/Initial Sig.	M. GRELL Manfred Grell — Level II
Examiner/Initial Sig.	N/A — Level
Date (Month-Day-Year)	3-18-00

Equipment	Lighting	Tools		
✓ Mirror	___ Ambient	✓ Scale	___ Depth Gauge	___ Level
___ Magnifier	✓ Flashlight	___ Micrometer	___ Comparator	
___ CCTV	___ Droplight	___ Caliper	___ Weld Gauge	

N/A WELDS & BASE MATERIAL VT-1	SAT	UN-SAT	N/A
Ground Blend Material	___	___	___
Undercut	___	___	___
Corrosion build-Up	___	___	___
Gouges	___	___	___
Evidence of Leakage	___	___	___
Arc Strikes	___	___	___
Cracks	___	___	___
Other **	___	___	___

* Provide details on unsat areas by use of supplemental data sheet.

** Provide details on other areas examined

✓ BOLTS, STUDS, AND WASHERS VT-1	SAT	UN-SAT	N/A
Loose Members	___	___	✓
Cracks	✓	___	___
Corrosion	✓ *	___	___
Gouges	✓	___	___
Thread Damage	✓ *	___	___
Deformation	✓	___	___
Protective Coating	✓	___	___
Evidence of Leakage	___	___	✓
Other**	___	___	✓

* minor surface corrosion and tool marks noted. MY 3-18-00

Comments examined (6) STUDS total (2) L/P (4) removed from Valve Body. No Abnormalities or visible wastage of cross sectional area or threaded surfaces noted @ time of exam. MY 3/18/00

FIGURE 1

VISUAL EXAMINATION RECORD - VT2

FARLEY NUCLEAR PLANT

SOUTHERN NUCLEAR OPERATING COMPANY

Plant/Unit FARLEY / 1	Data Package TPNS Q1E21V243	Drawing Number D-351116 SHT. 1
WO/WA No. W00600211	SystemBoundaries	
Procedure No. FNP-0-NDE-100.22		
Revision No. 2	RCS ALTERNATE CHARGING LINE	
Examiner Scott R. Erichson / Level II	ISOLATION VALVE BODY TO BONNET JOINT.	
Examiner N/A / Level N/A		
Date (Month-Day-Year) 3-4-00		
SKETCH	N/A	

Examination (Per Para. 7.5) ____ Sat ✓ *Unsat

*Provide details on unsat areas SEE FIGURE 2 - PAGE 2 OF 2

Comments REF. RR-27

FIGURE 2

VISUAL EXAMINATION SUPPLEMENTAL DATA SHEET

FARLEY NUCLEAR PLANT

SOUTHERN NUCLEAR OPERATING COMPANY

Plant/Unit	Line Number/Examination Area/Weld No.		Drawing Number	
FARLEY /1	Q1E21V243		D-351116 SHT. 1	
WO/WA No. W00600211	Date (Month-Day-Year)	Examiner	Level	Location
Procedure No. FNP-0-NDE-100.22				
Revision No. 2	3-4-00	Scott R. Erickson	II	CTMT OMB 107' EL.

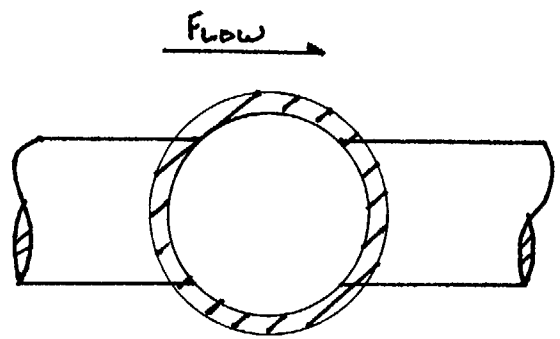

Comments: MODERATE DRY BORON BUILD-UP ON GASKET AREA.

Page 2 of 2

SHARED

FIGURE 1

VISUAL EXAMINATION RECORED VT-1

FARLEY NUCLEAR PLANT

SOUTHERN NUCLEAR OPERATING COMPANY

Plant/Unit	Line Number/Examination Area/Weld No.	Drawing Number	Sheet No.
FARLEY / 1	Q1E21V0243	N/A	

Photos	Sketch	Resolution	Technique
___ Yes ___ B&W ✓ No ___ Color	___ Yes ✓ No	✓ 1/32" Division (Scale) ___ 1/32" Line (Gray Card)	✓ Direct ___ Video ___ Remote

WO/WA	20001668
Procedure No.	FNP-0-NDE-100.21
Revision No.	1
Examiner/Initial Sig.	M. GRELL Manfred Grell
Level	II
Examiner/Initial Sig.	N/A
Level	
Date (Month-Day-Year)	3-29-00

Equipment	Lighting	Tools		
✓ Mirror	___ Ambient	✓ Scale	___ Depth Gauge	___ Level
___ Magnifier	✓ Flashlight	___ Micrometer	___ Comparator	___
___ CCTV	___ Droplight	___ Caliper	___ Weld Gauge	___

N/A WELDS & BASE MATERIAL VT-1	SAT	UN-SAT	N/A
Ground Blend Material	___	___	___
Undercut	___	___	___
Corrosion build-Up	___	___	___
Gouges	___	___	___
Evidence of Leakage	___	___	___
Arc Strikes	___	___	___
Cracks	___	___	___
Other **	___	___	___

* Provide details on unsat areas by use of supplemental data sheet.

** Provide details on other areas examined

✓ BOLTS, STUDS, AND WASHERS VT-1	SAT	UN-SAT	N/A
Loose Members	___	___	✓
Cracks	✓	___	___
Corrosion	✓	___	___
Gouges	✓	___	___
Thread Damage	✓	___	___
Deformation	✓	___	___
Protective Coating	✓	___	___
Evidence of Leakage	✓	___	___
Other**	___	___	✓

examined (1) STUD ~~imp~~ removed from Valve(s) STUDS examined (1/P)

Comments examined studs and nuts, No visible wastage of cross sectional area or threaded surfaces noted @ time of exam. MWS 3-29-00

FIGURE 1

SUPPORT EXAMINATION RECORD VT-3

FARLEY NUCLEAR PLANT — SOUTHERN NUCLEAR OPERATING COMPANY

Plant/Unit	Line Number/Examination Area/Weld No.	Drawing Number	Sheet No.
FARLEY 1	Q1E21V0243	N/A	

Photos	Sketch	Resolution	Technique
___ Yes ___ B&W	___ Yes	✓ 1/32" Division (Scale)	✓ Direct
✓ No ___ Color	✓ No	___ 1/32" Line (Gray Card)	___ Video
			___ Remote

WO/WA	20001668
Procedure No.	FNP-0-NDE-100.23
Revision No.	3
Examiner/Initial Sig.	M. GRELL Manfred Grell — Level II
Examiner/Initial Sig.	N/A — Level
Date (Month-Day-Year)	3-29-00

Equipment	Lighting	Tools		
✓ Mirror	___ Ambient	✓ Scale	___ Depth Gauge	___ Level
___ Magnifier	✓ Flashlight	___ Micrometer	___ Comparator	___
___ CCTV	___ Droplight	___ Caliper	___ Weld Gauge	___

N/A SNUBBERS VT-3	SAT	UN-SAT	N/A
Loose Bolt or Pin Connections			
Shaft Seal			
Fluid Leakage			
Fluid Tubing Condition			
Shaft Cleanliness			
Spherical Bearings			
Cotter & Clevis Pins Intact			
Other**			

* Provide details on unsat areas by use of supplemental data sheet.

** Provide details on other areas examined.

✓ COMP. INTERNALS & MAT'L SURFACE VT-3	SAT	UN-SAT	N/A
Pitting	✓		
Corrosion	✓		
Erosion	✓		
Foreign Material	✓		
Gouged Parts	✓		
Wear *	✓		
Evidence of Leakage	✓		
Other Cracks**			✓

* minor tool marks noted

examined 1 stud removed & 5 in place

N/A HANGER & SUPPORTS VT-3	SAT	UN-SAT	N/A
Setting:			
Hot ___ Cold ___			
Misalignment			
Damaged Members			
Gouges			
Arc Strikes			
Grind Marks			
Freedom of Movement			
Other**			

Comments: examined studs and nuts as well as gasket areas. no abnormalities noted @ time of exam.

FIGURE 1

VISUAL EXAMINATION RECORD - VT2

FARLEY NUCLEAR PLANT

SOUTHERN NUCLEAR OPERATING COMPANY

Plant/Unit FARLEY 1/1	Data Package TPNS Q1E11V043A	Drawing Number D-351115 SHT. 2
WO/WA No. W00600211	SystemBoundaries	
Procedure No.FNP-0-NDE-100.22		
Revision No. 2	SAFETY INJECTION TO RCS COLD LEGS	
Examiner Scott R. Erickson / Level II	ISOLATION VALVE BODY TO BONNET JOINT.	
Examiner N/A / Level N/A		
Date (Month-Day-Year) 3-4-00		
SKETCH	N/A	

Examination (Per Para. 7.5) _____ Sat ✓ *Unsat

*Provide details on unsat areas SEE FIGURE 2 - PAGE 2 OF 2

Comments REF. RR-27

FIGURE 2

VISUAL EXAMINATION SUPPLEMENTAL DATA SHEET

FARLEY NUCLEAR PLANT

SOUTHERN NUCLEAR OPERATING COMPANY

Plant/Unit	Line Number/Examination Area/Weld No.	Drawing Number	
FARLEY 1/1	Q1E11V043A	D-351115 SHT. 2	

WO/WA No. W006002 11	Date (Month-Day-Year)	Examiner	Level	Location
Procedure No. FNP-0-NDE-100.22				
Revision No. 2	3-4-00	Scott R. Erichson	II	CTMT OMB 110'EL.

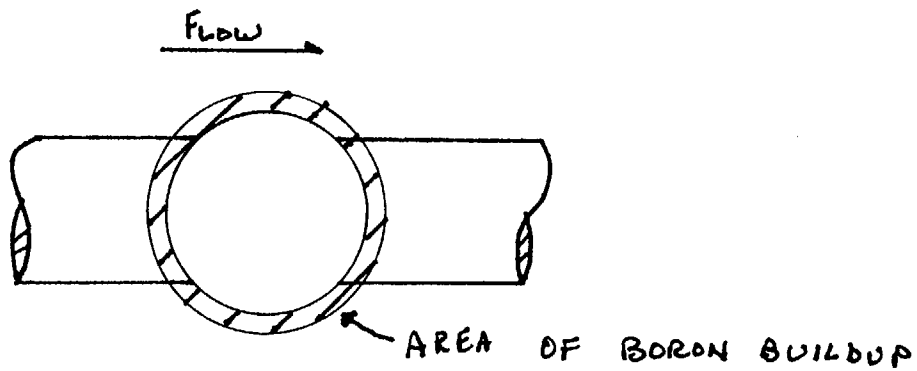

Comments: LIGHT DRY BORON BUILD-UP ON GASKET AREA.

Page 2 of 2

FIGURE 1

SUPPORT EXAMINATION RECORD VT-3

FARLEY NUCLEAR PLANT

SOUTHERN NUCLEAR OPERATING COMPANY

Plant/Unit	Line Number/Examination Area/Weld No.	Drawing Number	Sheet No.
Farley 1	Q1E11V043A	N/A	

Photos	Sketch	Resolution	Technique
___ Yes ___ B&W	___ Yes	✓ 1/32" Division (Scale)	✓ Direct
✓ No ___ Color	✓ No	___ 1/32" Line (Gray Card)	___ Video
			___ Remote

WO/WA	2000 1670
Procedure No.	FNP-0-NDE-100.23
Revision No.	3
Examiner/Initial Sig.	M. GRELL Manford Grell
Level	II
Examiner/Initial Sig.	N/A
Level	
Date (Month-Day-Year)	3-22-00

Equipment	Lighting	Tools		
✓ Mirror	___ Ambient	✓ Scale	___ Depth Gauge	___ Level
___ Magnifier	✓ Flashlight	___ Micrometer	___ Comparator	___
___ CCTV	___ Droplight	___ Caliper	___ Weld Gauge	___

N/A SNUBBERS VT-3	SAT	UN-SAT	N/A
Loose Bolt or Pin Connections	___	___	___
Shaft Seal	___	___	___
Fluid Leakage	___	___	___
Fluid Tubing Condition	___	___	___
Shaft Cleanliness	___	___	___
Spherical Bearings	___	___	___
Cotter & Clevis Pins Intact	___	___	___
Other**	___	___	___

* Provide details on unsat areas by use of supplemental data sheet.

** Provide details on other areas examined.

✓ COMP. INTERNALS & MAT'L SURFACE VT-3	SAT	UN-SAT	N/A
Pitting	✓	___	___
Corrosion	✓	___	___
Erosion	✓	___	___
Foreign Material	✓	___	___
Gouged Parts	✓	___	___
Wear	✓	___	___
Evidence of Leakage	___	___	✓
Other Cracks**	___	___	✓

examined 11 STUDS after removal from Value body (1) STUD examined (I/P)

N/A HANGER & SUPPORTS VT-3	SAT	UN-SAT	N/A
Setting:	___	___	___
Hot ___ Cold ___	___	___	___
Misalignment	___	___	___
Damaged Members	___	___	___
Gouges	___	___	___
Arc Strikes	___	___	___
Grind Marks	___	___	___
Freedom of Movement	___	___	___
Other**	___	___	___

Comments examined 12 STUDS Total 12 NUTS TOTAL minor corrosion & tool marks noted. examined new gasket and gasket seating surfaces. no abnormalities noted @ Time of exam. MG 3-22-00

SHARED

FIGURE 1

VISUAL EXAMINATION RECORED VT-1

FARLEY NUCLEAR PLANT

SOUTHERN NUCLEAR OPERATING COMPANY

Plant/Unit	Line Number/Examination Area/Weld No.	Drawing Number	Sheet No.
FARLEY / 1	Q1E11V043A	N/A	

Photos	Sketch	Resolution	Technique
___ Yes ___ B&W ✓ No ___ Color	___ Yes ✓ No	✓ 1/32" Division (Scale) ___ 1/32" Line (Gray Card)	✓ Direct ___ Video ___ Remote

WO/WA	20001670
Procedure No.	FNP-0-NDE-100.21
Revision No.	1
Examiner/Initial Sig.	M. GRELL Manfred Grell
Level	II
Examiner/Initial Sig.	N/A
Level	
Date (Month-Day-Year)	3.22.00

Equipment	Lighting	Tools		
✓ Mirror	___ Ambient	✓ Scale	___ Depth Gauge	___ Level
___ Magnifier	✓ Flashlight	___ Micrometer	___ Comparator	___
___ CCTV	___ Droplight	___ Caliper	___ Weld Gauge	___

N/A WELDS & BASE MATERIAL VT-1	SAT	UN-SAT	N/A
Ground Blend Material	___	___	___
Undercut	___	___	___
Corrosion build-Up	___	___	___
Gouges	___	___	___
Evidence of Leakage	___	___	___
Arc Strikes	___	___	___
Cracks	___	___	___
Other **	___	___	___

* Provide details on unsat areas by use of supplemental data sheet.

** Provide details on other areas examined

✓ BOLTS, STUDS, AND WASHERS VT-1	SAT	UN-SAT	N/A
Loose Members	___	___	✓
Cracks	✓	___	___
Corrosion	✓	___	___
Gouges	✓	___	___
Thread Damage	✓	___	___
Deformation	✓	___	___
Protective Coating	✓	___	___
Evidence of Leakage	✓	___	___
Other**	___	___	✓

minor surface corrosion & tool marks noted on studs & Nuts MM 3-22-00

Comments examined 11 studs removed from Valve body (1) STUD I/P examined 12 Nuts. No Visible Wastage of cross sectional area or threaded surfaces noted @ time of exam MM 3-22-00

SHARED

FIGURE 1

VISUAL EXAMINATION RECORD - VT2

FARLEY NUCLEAR PLANT

SOUTHERN NUCLEAR OPERATING COMPANY

Plant/Unit FARLEY /1	Data Package REF. 160.6-1
WO/WA No. W00600211	Drawing Number D-351107 SHT.1 D-351115 SHT.2 D-351118 SHT.1
Procedure No. FNP-0-NDE-100.22	SystemBoundaries
Revision No. 2	THE RHR 'A' TRAIN PIPING WAS EXAMINED IN SERVICE UNDER NORMAL OPERATING CONDITIONS. SEE ATTACHED SHEETS FOR THE SYSTEM BOUNDARIES. THE EXAMINATION INCLUDED ALL VENTS, DRAINS, INSTRUMENT LINES AND TEST CONNECTIONS WITHIN THE SYSTEM BOUNDARIES. INSULATION WAS REMOVED FROM BOLTED CONNECTIONS TO ALLOW FOR EXAMINATION.
Examiner [signature] Level II	
Examiner N/A Level	
Date (Month-Day-Year) 05-16-00	
SKETCH	N/A

Examination (Per Para. 7.5)

_____ Sat ✓ *Unsat

*Provide details on unsat areas THE FOLLOWING UNSATS: QIE11V027A LIGHT DRY BORON BUILDUP @ GASKET 360°; QE11V065C MODERAT DRY BORON ON ENDCAP, QIE11V037A HEAVY DRY BORON BUILDUP AROUND STEM & STEM SEAL, AND LIGHT DRY BORON INTERMITTANT LOWER ½ OF RHR HX FLANGE GASKET AREA. MWO 20004078 written to clean and repair endcap QIE11V065C (H001A-A) AS necessary. MWO 20004079 written to clean valve stem and check packing on QIE11V037A. MWO 20004077 written to clean and repair gasket for valve QIE11V0027A AS necessary (boron is not in contact with bolting). These are not Code items, Reinspection is not Required.

Comments

Charles W. Dean 5/16/00

SHARED

FIGURE 1

VISUAL EXAMINATION RECORED VT-1

FARLEY NUCLEAR PLANT

SOUTHERN NUCLEAR OPERATING COMPANY

Plant/Unit	Line Number/Examination Area/Weld No.	Drawing Number	Sheet No.
FARLEY 1	Q1E11H0001A	N/A	

Photos	Sketch	Resolution	Technique
___ Yes ___ B&W ✓ No ___ Color	___ Yes ✓ No	✓ 1/32" Division (Scale) ___ 1/32" Line (Gray Card)	✓ Direct ___ Video ___ Remote

WO/WA	M20001763
Procedure No.	FNP-0-NDE-100.21
Revision No.	1
Examiner/Initial Sig.	M. GRELL Manfred Grell
Level	II
Examiner/Initial Sig.	N/A
Level	
Date (Month-Day-Year)	3/17/00

Equipment	Lighting	Tools		
✓ Mirror	___ Ambient	✓ Scale	___ Depth Gauge	___ Level
___ Magnifier	✓ Flashlight	___ Micrometer	___ Comparator	___
___ CCTV	___ Droplight	___ Caliper	___ Weld Gauge	___

N/A WELDS & BASE MATERIAL VT-1	SAT	UN-SAT	N/A
Ground Blend Material	___	___	___
Undercut	___	___	___
Corrosion build-Up	___	___	___
Gouges	___	___	___
Evidence of Leakage	___	___	___
Arc Strikes	___	___	___
Cracks	___	___	___
Other **	___	___	___

* Provide details on unsat areas by use of supplemental data sheet.

** Provide details on other areas examined

✓ BOLTS, STUDS, AND WASHERS VT-1	SAT	UN-SAT	N/A
Loose Members	___	___	✓
Cracks	✓	___	___
Corrosion	✓*	___	___
Gouges	✓*	___	___
Thread Damage	✓*	___	___
Deformation	✓	___	___
Protective Coating	✓	___	___
Evidence of Leakage	___	___	✓
Other**	___	___	✓

* minor surface corrosion & tool marks noted. MG 3/17/00

Comments examined (1) STUD after removal for inspection. no visible wastage of cross sectional area or threaded surfaces noted @ time of exam. MG 3/17/00

FIGURE 1

SUPPORT EXAMINATION RECORD VT-3

FARLEY NUCLEAR PLANT

SOUTHERN NUCLEAR OPERATING COMPANY

Plant/Unit	Line Number/Examination Area/Weld No.	Drawing Number	Sheet No.
FARLEY 1	Q1E11H0001A	N/A	

Photos	Sketch	Resolution	Technique
___ Yes ___ B&W	___ Yes	✓ 1/32" Division (Scale)	✓ Direct
✓ No ___ Color	✓ No	___ 1/32" Line (Gray Card)	___ Video
			___ Remote

WO/WA	M 20001763
Procedure No.	FNP-0-NDE-100.23
Revision No.	3
Examiner/Initial Sig.	M. GRELL Manfred Grell
Level	II
Examiner/Initial Sig.	N/A
Level	
Date (Month-Day-Year)	3/17/00

Equipment	Lighting	Tools		
✓ Mirror	___ Ambient	✓ Scale	___ Depth Gauge	___ Level
___ Magnifier	✓ Flashlight	___ Micrometer	___ Comparator	___
___ CCTV	___ Droplight	___ Caliper	___ Weld Gauge	___

N/A SNUBBERS VT-3	SAT	UN-SAT	N/A
Loose Bolt or Pin Connections			
Shaft Seal			
Fluid Leakage			
Fluid Tubing Condition			
Shaft Cleanliness			
Spherical Bearings			
Cotter & Clevis Pins Intact			
Other**			

* Provide details on unsat areas by use of supplemental data sheet.

** Provide details on other areas examined.

✓ COMP. INTERNALS & MAT'L SURFACE VT-3	SAT	UN-SAT	N/A
Pitting	✓		
Corrosion	✓		
Erosion	✓		
Foreign Material	✓		
Gouged Parts	✓		
Wear	✓		
Evidence of Leakage			✓
Other Cracks**			✓

N/A HANGER & SUPPORTS VT-3	SAT	UN-SAT	N/A
Setting:			
Hot ___ Cold ___			
Misalignment			
Damaged Members			
Gouges			
Arc Strikes			
Grind Marks			
Freedom of Movement			
Other**			

Comments minor surface corrosion and tool marks noted on the (1) STUD removed for inspection no visible wastage of cross sectional area or threaded surfaces noted @ time of exam. MG
MG 3/17/00

RHR HEAT EXCHANGER Q1E11H0001A
PRESSURE TEST AND BOLTED CONNECTION INSPECTION

The ASME Code required Pressure Test was accomplished during the 1R16 refueling outage. A slight amount of boron buildup was noted in the lower quadrant around the heat exchanger head-to-tubesheet gasket. The boron buildup was dry and no evidence of an active leak was noted. The area around the gasket and bolting was cleaned, and as much of the boron buildup as possible was removed without disassembly of the heat exchanger. A small amount of boron residue could not be removed with the heat exchanger intact. The stud in the vicinity of maximum boron buildup was removed and VT-3/VT-1 examined for evidence of corrosion. No evidence of wastage or any other corrosion mechanism was observed during the visual examination. The stud was reinstalled in the heat exchanger.

The head-to-tubesheet bolting for Heat Exchanger Q1E11H001A will be given the Code required visual examination for evidence of corrosion in conjunction with the next Code required Pressure Test in approximately 40 months during the next ISI Period.

Charles W. Dean

Prepared by: Charles W. Dean
May 15, 2000

David Hartline

Approved by: David B. Hartline
May 15, 2000

FIGURE 1

VISUAL EXAMINATION RECORD - VT2

FARLEY NUCLEAR PLANT

SOUTHERN NUCLEAR OPERATING COMPANY

Plant/Unit FARLEY / 1		Data Package REF. 160.7-1	Drawing Number D-351107 SHT. 1, D-351115 SHT. 2, D-35111B SHT. 1
WO/WA No. W00600211		SystemBoundaries	
Procedure No. FNP-0-NDE-100.22		THE RHR 'B' TRAIN PIPING WAS EXAMINED IN SERVICE UNDER NORMAL OPERATING CONDITIONS. SEE ATTACHED SHEET FOR THE SYSTEM BOUNDARIES. THE EXAMINATION INCLUDED ALL VENTS, DRAINS, INSTRUMENT LINES AND TEST CONNECTIONS WITHIN THE SYSTEM BOUNDARIES. INSULATION WAS REMOVED FROM BOLTED CONNECTIONS TO ALLOW FOR EXAMINATION.	
Revision No. 2			
Examiner [signature]	Level II		
Examiner N/A	Level		
Date (Month-Day-Year) 05-16-00			
SKETCH		N A	

Examination (Per Para. 7.5)

____ Sat ✓ *Unsat

*Provide details on unsat areas THE FOLLOWING UNSATS: Q1E11V070D HEAVY DRY BORON BUILDUP ON ENDCAP, ~~Q1E11V069D~~ Q1E11V069D AB HEAVY DRY BORON ON END CAP, RHR HX FLANGE LOWER 2/3 LIGHT DRY BORON @ GASKET JOINT, POOLA-B MODERATE

Comments BORON BUILDUP ON SHAFT SEAL, Q1E11V067D ACTIVE LEAK 2.D.P.M. ON END CAP, Q1E11V032B LIGHT DRY BORON ON STEM SEAL, AND Q1E11V023A LIGHT DRY BORON ON STEM SEAL. MWO 20004080 written to clean and repair end cap on Q1E11V0070D. MWO 20004130 written to clean and repair end cap on Q1E11V0069D. MWO 20004107 written to clean and repair shaft seal on Q1E11P001B. MWO written to repair end cap on Q1E11V0067D. MWO 20004102 written to clean and check packing on Q1E11V0032B. MWO 20004104 written to clean and repair Q1E11V0023A as necessary. ~~The~~ These are all non-Code items, and reinspection is not required. Charles W. Dean 5/17/00

RHR HEAT EXCHANGER Q1E11H0001B
PRESSURE TEST AND BOLTED CONNECTION INSPECTION

The ASME Code required Pressure Test was accomplished during the 1R16 refueling outage. A slight amount of boron buildup was noted in the lower quadrant around the heat exchanger head-to-tubesheet gasket. The boron buildup was dry and no evidence of an active leak was noted. The area around the gasket and bolting was cleaned, and as much of the boron buildup as possible was removed without disassembly of the heat exchanger. A small amount of boron residue could not be removed with the heat exchanger intact. The stud in the vicinity of maximum boron buildup was removed and VT-3/VT-1 examined for evidence of corrosion. No evidence of wastage or any other corrosion mechanism was observed during the visual examination. The stud was reinstalled in the heat exchanger.

The head-to-tubesheet bolting for Heat Exchanger Q1E11H001B will be given the Code required visual examination for evidence of corrosion in conjunction with the next Code required Pressure Test in approximately 40 months during the next ISI Period.

Prepared by: Charles W. Dean
May 15, 2000

Approved by: David B. Hartline
May 15, 2000

SHARED

FIGURE 1

VISUAL EXAMINATION RECORED VT-1

FARLEY NUCLEAR PLANT

SOUTHERN NUCLEAR OPERATING COMPANY

Plant/Unit	Line Number/Examination Area/Weld No.	Drawing Number	Sheet No.
FARLEY /1	Q1E11 H0001B	N/A	

Photos	Sketch	Resolution	Technique
___ Yes ___ B&W	___ Yes	✓ 1/32" Division (Scale)	✓ Direct
✓ No ___ Color	✓ No	___ 1/32" Line (Gray Card)	___ Video
			___ Remote

WO/WA	M20001765
Procedure No.	FNP-0-NDE-100.21
Revision No.	1
Examiner/Initial Sig.	M. GRELL Mark Grell
Level	II
Examiner/Initial Sig.	N/A
Level	
Date (Month-Day-Year)	3/17/00

Equipment	Lighting	Tools		
✓ Mirror	___ Ambient	✓ Scale	___ Depth Gauge	___ Level
___ Magnifier	✓ Flashlight	___ Micrometer	___ Comparator	___
___ CCTV	___ Droplight	___ Caliper	___ Weld Gauge	___

N/A **WELDS & BASE MATERIAL VT-1**

	SAT	UN-SAT	N/A
Ground Blend Material	___	___	___
Undercut	___	___	___
Corrosion build-Up	___	___	___
Gouges	___	___	___
Evidence of Leakage	___	___	___
Arc Strikes	___	___	___
Cracks	___	___	___
Other **	___	___	___

* Provide details on unsat areas by use of supplemental data sheet.

** Provide details on other areas examined

✓ **BOLTS, STUDS, AND WASHERS VT-1**

	SAT	UN-SAT	N/A
Loose Members	___	___	✓
Cracks	✓	___	___
Corrosion	✓*	___	___
Gouges	✓*	___	___
Thread Damage	✓*	___	___
Deformation	✓	___	___
Protective Coating	✓	___	___
Evidence of Leakage	___	___	✓
Other**	___	___	✓

* minor surface corrosion & tool marks noted MS 3-17-00

Comments examined (1) Stud after removal for inspection. No Visible wastage of cross sectional area or threaded surfaces noted @ time of exam. MS 3/17/00

FIGURE 1

SUPPORT EXAMINATION RECORD VT-3

FARLEY NUCLEAR PLANT

SOUTHERN NUCLEAR OPERATING COMPANY

Plant/Unit	Line Number/Examination Area/Weld No.	Drawing Number	Sheet No.
FARLEY/1	Q1E11H0001B	N/A	

Photos	Sketch	Resolution	Technique
___ Yes ___ B&W	___ Yes	✓ 1/32" Division (Scale)	✓ Direct
✓ No ___ Color	✓ No	___ 1/32" Line (Gray Card)	___ Video
			___ Remote

WO/WA	M 2000 1765
Procedure No.	FNP-0-NDE-100.23
Revision No.	3
Examiner/Initial Sig.	M. GRELY Manfred Grely — Level II
Examiner/Initial Sig.	N/A — Level
Date (Month-Day-Year)	3/17/00

Equipment	Lighting	Tools		
✓ Mirror	___ Ambient	✓ Scale	___ Depth Gauge	___ Level
___ Magnifier	✓ Flashlight	___ Micrometer	___ Comparator	___
___ CCTV	___ Droplight	___ Caliper	___ Weld Gauge	___

N/A SNUBBERS VT-3	SAT	UN-SAT	N/A
Loose Bolt or Pin Connections	___	___	___
Shaft Seal	___	___	___
Fluid Leakage	___	___	___
Fluid Tubing Condition	___	___	___
Shaft Cleanliness	___	___	___
Spherical Bearings	___	___	___
Cotter & Clevis Pins Intact	___	___	___
Other**	___	___	___

* Provide details on unsat areas by use of supplemental data sheet.

** Provide details on other areas examined.

✓ COMP. INTERNALS & MAT'L SURFACE VT-3	SAT	UN-SAT	N/A
Pitting	✓	___	___
Corrosion	✓	___	___
Erosion	✓	___	___
Foreign Material	✓	___	___
Gouged Parts	✓	___	___
Wear	✓	___	___
Evidence of Leakage	___	___	✓
Other Cracks**	___	___	✓

N/A HANGER & SUPPORTS VT-3	SAT	UN-SAT	N/A
Setting:	___	___	___
Hot ___ Cold ___	___	___	___
Misalignment	___	___	___
Damaged Members	___	___	___
Gouges	___	___	___
Arc Strikes	___	___	___
Grind Marks	___	___	___
Freedom of Movement	___	___	___
Other**	___	___	___

Comments minor surface corrosion and tool marks noted on the (1) STud removed for inspection no visible wastage of cross sectional area or threaded surfaces noted @ time of exam MG 3/17/00

FIGURE 1

VISUAL EXAMINATION RECORD - VT2

FARLEY NUCLEAR PLANT

SOUTHERN NUCLEAR OPERATING COMPANY

Plant/Unit FARLEY /		Data Package TPNS Q1E21V049	Drawing Number D-351115 SHT. 2
WO/WA No. W00600211		SystemBoundaries	
Procedure No.FNP-0-NDE-100.22			
Revision No. 2		ACCUMULATOR TANKS TO RWST CONTAINMENT	
Examiner Scott R. Erickson	Level II	ISOLATION VALVE (PENETRATION 29) BODY TO BONNET	
Examiner N/A	Level N/A	JOINT.	
Date (Month-Day-Year) 3-4-00			
SKETCH		N A	
Examination (Per Para. 7.5) ____ Sat ✓ *Unsat			
*Provide details on unsat areas SEE FIGURE 2 - PAGE 2 OF 2			
Comments			

FIGURE 2

VISUAL EXAMINATION SUPPLEMENTAL DATA SHEET

FARLEY NUCLEAR PLANT

SOUTHERN NUCLEAR OPERATING COMPANY

Plant/Unit	Line Number/Examination Area/Weld No.	Drawing Number	
FARLEY 1/1	Q1E21V049	D-351115 SHT. 2	

WO/WA No. W00600211	Date (Month-Day-Year)	Examiner	Level	Location
Procedure No. FNP-0-NDE-100.22				
Revision No. 2	3-4-00	Scott R. Erickson	II	CTMT 134' EL.

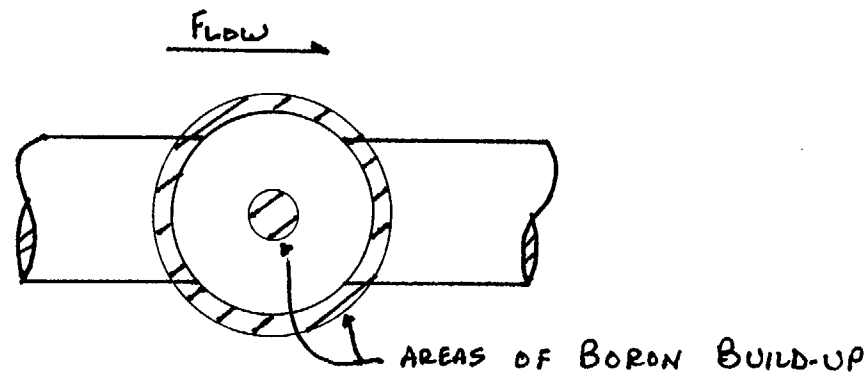

Comments: MODERATE DRY BORON BUILD-UP ON STEM AND GASKET AREA

Page 2 of 2

FIGURE 1

VISUAL EXAMINATION RECORED VT-1

FARLEY NUCLEAR PLANT

SOUTHERN NUCLEAR OPERATING COMPANY

Plant/Unit	Line Number/Examination Area/Weld No.	Drawing Number	Sheet No.
FARLEY 1	Q1E21V049	N/A	

Photos	Sketch	Resolution	Technique
___ Yes ___ B&W	___ Yes	✓ 1/32" Division (Scale)	✓ Direct
✓ No ___ Color	✓ No	___ 1/32" Line (Gray Card)	___ Video
			___ Remote

WO/WA 20002026	
Procedure No. FNP-0-NDE-100.21	
Revision No. 1	
Examiner/Initial Sig. SCOTT R. ERICKSON Scott R. Erickson	Level II
Examiner/Initial Sig. N/A	Level N/A
Date (Month-Day-Year) 3-28-00	

Equipment	Lighting	Tools		
✓ Mirror	___ Ambient	✓ Scale	___ Depth Gauge	___ Level
___ Magnifier	✓ Flashlight	___ Micrometer	___ Comparator	___
___ CCTV	___ Droplight	___ Caliper	___ Weld Gauge	___

N/A WELDS & BASE MATERIAL VT-1	SAT	UN-SAT	N/A
Ground Blend Material	___	___	___
Undercut	___	___	___
Corrosion build-Up	___	___	___
Gouges	___	___	___
Evidence of Leakage	___	___	___
Arc Strikes	___	___	___
Cracks	___	___	___
Other **	___	___	___

* Provide details on unsat areas by use of supplemental data sheet.

** Provide details on other areas examined

✓ BOLTS, STUDS, AND WASHERS VT-1	SAT	UN-SAT	N/A
Loose Members	___	___	✓
Cracks	✓	___	___
Corrosion	✓	___	___
Gouges	✓	___	___
Thread Damage	✓	___	___
Deformation	✓	___	___
Protective Coating	✓	___	___
Evidence of Leakage	___	___	✓
Other**	___	___	✓

Comments EXAMINED (6) STUDS AFTER REMOVAL FROM VALVE BODY. NO VISIBLE WASTAGE OF CROSS SECTIONAL AREA OR THREADED SURFACES NOTED AT TIME OF EXAM. SRE 3-28-00

FIGURE 1

SUPPORT EXAMINATION RECORD VT-3

FARLEY NUCLEAR PLANT

SOUTHERN NUCLEAR OPERATING COMPANY

Plant/Unit	Line Number/Examination Area/Weld No.	Drawing Number	Sheet No.
FARLEY / 1	Q1E21V049	N/A	

Photos	Sketch	Resolution	Technique
___ Yes ___ B&W	___ Yes	✓ 1/32" Division (Scale)	✓ Direct
✓ No ___ Color	✓ No	___ 1/32" Line (Gray Card)	___ Video
			___ Remote

WO/WA	20002026
Procedure No.	FNP-0-NDE-100.23
Revision No.	3
Examiner/Initial Sig.	SCOTT R. ERICKSON / Scott R. Erickson — Level II
Examiner/Initial Sig.	N/A — Level N/A
Date (Month-Day-Year)	3-28-00

Equipment	Lighting	Tools		
✓ Mirror	___ Ambient	✓ Scale	___ Depth Gauge	___ Level
___ Magnifier	✓ Flashlight	___ Micrometer	___ Comparator	___
___ CCTV	___ Droplight	___ Caliper	___ Weld Gauge	___

N/A SNUBBERS VT-3	SAT	UN-SAT	N/A
Loose Bolt or Pin Connections	___	___	___
Shaft Seal	___	___	___
Fluid Leakage	___	___	___
Fluid Tubing Condition	___	___	___
Shaft Cleanliness	___	___	___
Spherical Bearings	___	___	___
Cotter & Clevis Pins Intact	___	___	___
Other**	___	___	___

* Provide details on unsat areas by use of supplemental data sheet.

** Provide details on other areas examined.

✓ COMP. INTERNALS & MAT'L SURFACE VT-3	SAT	UN-SAT	N/A
Pitting	✓	___	___
Corrosion	✓	___	___
Erosion	✓	___	___
Foreign Material	✓	___	___
Gouged Parts	✓	___	___
Wear	✓	___	___
Evidence of Leakage	✓	___	___
Other Cracks**	___	___	✓

N/A HANGER & SUPPORTS VT-3	SAT	UN-SAT	N/A
Setting:	___	___	___
Hot ___ Cold ___	___	___	___
Misalignment	___	___	___
Damaged Members	___	___	___
Gouges	___	___	___
Arc Strikes	___	___	___
Grind Marks	___	___	___
Freedom of Movement	___	___	___
Other**	___	___	___

Comments EXAMINED FLANGE & GASKET SEATING AREA. EXAMINED (6) STUDS AFTER REMOVAL FROM VALVE BODY. NO VISIBLE WASTAGE OF CROSS SECTIONAL AREA OR THREADED SURFACES NOTED AT TIME OF EXAM. SRE 3-28-00

FIGURE 1

VISUAL EXAMINATION RECORD - VT2

FARLEY NUCLEAR PLANT

SOUTHERN NUCLEAR OPERATING COMPANY

Plant/Unit FARLEY 1		Data Package TPNS Q1E21V050	Drawing Number D-351115 SHT. 2
WO/WA No. W00600211		SystemBoundaries	
Procedure No.FNP-0-NDE-100.22			
Revision No. 2		ACCUMULATOR TANKS TO RWST ISOLATION	
Examiner [signature]	Level II	VALVE (PENETRATION 29) BODY TO BONNET JOINT	
Examiner N/A	Level N/A		
Date (Month-Day-Year) 3-4-00			
SKETCH		N/A	

Examination (Per Para. 7.5) ____ Sat ✓ *Unsat

*Provide details on unsat areas SEE FIGURE 2 - PAGE 2 OF 2

Comments

FIGURE 2

VISUAL EXAMINATION SUPPLEMENTAL DATA SHEET

FARLEY NUCLEAR PLANT

SOUTHERN NUCLEAR OPERATING COMPANY

Plant/Unit	Line Number/Examination Area/Weld No.		Drawing Number		
FARLEY 1	Q1E21V050		D-351115 SHT. 2		
WO/WA No. W00600211	Date (Month-Day-Year)	Examiner		Level	Location
Procedure No. FNP-0-NDE-100.22					
Revision No. 2	3-4-00				AUX BLDG. 121' Rm 223

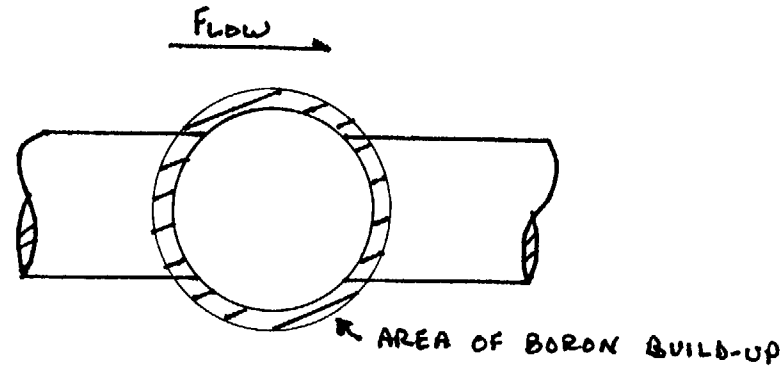

Comments: MODERATE DRY BORON BUILD-UP ON GASKET AREA

Page 2 of 2

FIGURE 1

VISUAL EXAMINATION RECORED VT-1

FARLEY NUCLEAR PLANT

SOUTHERN NUCLEAR OPERATING COMPANY

Plant/Unit	Line Number/Examination Area/Weld No.	Drawing Number	Sheet No.
FARLEY 1	Q1E21V050	N/A	

Photos	Sketch	Resolution	Technique
___ Yes ___ B&W	___ Yes	✓ 1/32" Division (Scale)	✓ Direct
✓ No ___ Color	✓ No	___ 1/32" Line (Gray Card)	___ Video
			___ Remote

WO/WA 20002027

Procedure No. FNP-0-NDE-100.21

Revision No. 1

Examiner/Initial Sig. SCOTT R. ERICKSON Scott R. Erickson — Level II

Examiner/Initial Sig. N/A — Level N/A

Date (Month-Day-Year) 3-25-00

Equipment	Lighting	Tools		
✓ Mirror	___ Ambient	✓ Scale	___ Depth Gauge	___ Level
___ Magnifier	✓ Flashlight	___ Micrometer	___ Comparator	___
___ CCTV	___ Droplight	___ Caliper	___ Weld Gauge	___

N/A WELDS & BASE MATERIAL VT-1	SAT	UN-SAT	N/A
Ground Blend Material	___	___	___
Undercut	___	___	___
Corrosion build-Up	___	___	___
Gouges	___	___	___
Evidence of Leakage	___	___	___
Arc Strikes	___	___	___
Cracks	___	___	___
Other **	___	___	___

* Provide details on unsat areas by use of supplemental data sheet.

** Provide details on other areas examined

✓ BOLTS, STUDS, AND WASHERS VT-1	SAT	UN-SAT	N/A
Loose Members	___	___	✓
Cracks	✓	___	___
Corrosion	✓	___	___
Gouges	✓	___	___
Thread Damage	✓	___	___
Deformation	✓	___	___
Protective Coating	✓	___	___
Evidence of Leakage	___	___	✓
Other**	___	___	✓

MINOR TOOL MARKS ON STUDS & MINOR SURFACE CORROSION ON NUTS. SRE 3-25-00

Comments EXAMINED (6) STUDS & (6) NUTS AFTER REMOVAL FROM VALVE BODY. NO VISIBLE WASTAGE OF CROSS SECTIONAL AREA OR THREADED SURFACES NOTED AT TIME OF EXAM. SRE 3-25-00

FIGURE 1

SUPPORT EXAMINATION RECORD VT-3

FARLEY NUCLEAR PLANT — SOUTHERN NUCLEAR OPERATING COMPANY

Plant/Unit	Line Number/Examination Area/Weld No.	Drawing Number	Sheet No.
FARLEY 1	Q1E21V050	N/A	

Photos	Sketch	Resolution	Technique
___ Yes ___ B&W	___ Yes	✓ 1/32" Division (Scale)	✓ Direct
✓ No ___ Color	✓ No	___ 1/32" Line (Gray Card)	___ Video
			___ Remote

(WO)/WA	20002027
Procedure No.	FNP-0-NDE-100.23
Revision No.	3
Examiner/Initial Sig.	SCOTT R. ERICKSON / Scott R. Erickson
Level	II
Examiner/Initial Sig.	N/A
Level	N/A
Date (Month-Day-Year)	3-25-00

Equipment	Lighting	Tools		
✓ Mirror	___ Ambient	✓ Scale	___ Depth Gauge	___ Level
___ Magnifier	✓ Flashlight	___ Micrometer	___ Comparator	___
___ CCTV	___ Droplight	___ Caliper	___ Weld Gauge	___

N/A SNUBBERS VT-3	SAT	UN-SAT	N/A
Loose Bolt or Pin Connections	___	___	___
Shaft Seal	___	___	___
Fluid Leakage	___	___	___
Fluid Tubing Condition	___	___	___
Shaft Cleanliness	___	___	___
Spherical Bearings	___	___	___
Cotter & Clevis Pins Intact	___	___	___
Other**	___	___	___

* Provide details on unsat areas by use of supplemental data sheet.

** Provide details on other areas examined.

✓ COMP. INTERNALS & MAT'L SURFACE VT-3	SAT	UN-SAT	N/A
Pitting	✓	___	___
Corrosion	✓	___	___
Erosion	✓	___	___
Foreign Material	✓	___	___
Gouged Parts	✓	___	___
Wear	✓	___	___
Evidence of Leakage	✓	___	___
Other Cracks**	___	___	✓

MINOR TOOL MARKS ON STUDS & MINOR SURFACE CORROSION ON NUTS. SRE 3-25-00

N/A HANGER & SUPPORTS VT-3	SAT	UN-SAT	N/A
Setting:	___	___	___
Hot ___ Cold ___	___	___	___
Misalignment	___	___	___
Damaged Members	___	___	___
Gouges	___	___	___
Arc Strikes	___	___	___
Grind Marks	___	___	___
Freedom of Movement	___	___	___
Other**	___	___	___

Comments EXAMINED FLANGE & GASKET SEATING SURFACE. EXAMINED (6) STUDS & (6) NUTS AFTER REMOVAL FROM VALVE BODY. NO VISIBLE WASTAGE OF CROSS SECTIONAL AREA OR THREADED SURFACES NOTED AT TIME OF EXAM SRE 3-25-00

FIGURE 1

VISUAL EXAMINATION RECORD - VT2

FARLEY NUCLEAR PLANT

SOUTHERN NUCLEAR OPERATING COMPANY

Plant/Unit FARLEY /1		Data Package TPNS Q1E21V091	Drawing Number D-351115 SHT. 2
WO/WA No. W00600211		SystemBoundaries	
Procedure No.FNP-0-NDE-100.22			
Revision No. 2		ACCUMULATOR FILL LINE ISOLATION	
Examiner [signature]	Level II	VALVE (PENETRATION 49) BODY TO BONNET JOINT.	
Examiner N/A	Level N/A		
Date (Month-Day-Year) 3-4-00			
SKETCH		N/A	

Examination (Per Para. 7.5)

_____ Sat ✓ *Unsat

*Provide details on unsat areas SEE FIGURE 2 - PAGE 2 OF 2

Comments

FIGURE 2

VISUAL EXAMINATION SUPPLEMENTAL DATA SHEET

FARLEY NUCLEAR PLANT

SOUTHERN NUCLEAR OPERATING COMPANY

Plant/Unit	Line Number/Examination Area/Weld No.	Drawing Number	
FARLEY 1	Q1E21V091	D-351115 SHT-2	

WO/WA No. W00600211	Date (Month-Day-Year)	Examiner	Level	Location
Procedure No. FNP-0-NDE-100.22				
Revision No. 2	3-4-00	[signature]	II	AUX BLDG 121' EL. RM 223

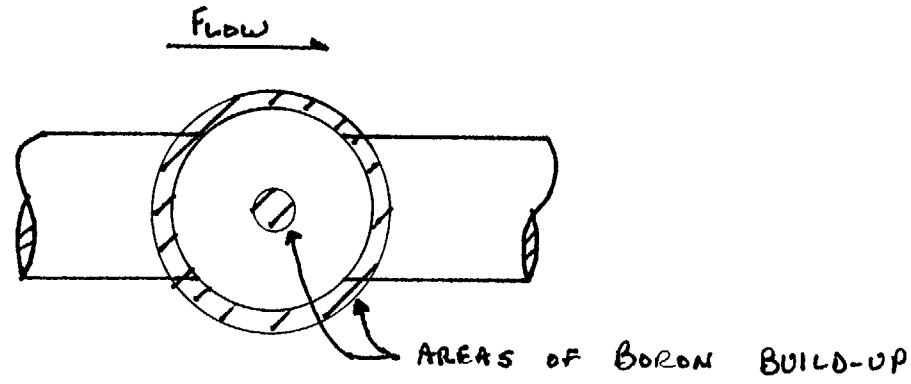

Comments: MODERATE DRY BORON BUILD-UP ON STEM AND GASKET AREA

Page 2 of 2

03/18/00 13:55:19

SHARED

FIGURE 1

VISUAL EXAMINATION RECORED VT-1

FNP-0-NDE-100.21
RTYPE: L1.09

FARLEY NUCLEAR PLANT

SOUTHERN NUCLEAR OPERATING COMPANY

Plant/Unit	Line Number/Examination Area/Weld No.	Drawing Number	Sheet No.
FARLEY 1	Q1E21V091	N/A	

Photos	Sketch	Resolution	Technique
___ Yes ___ B&W	___ Yes	✓ 1/32" Division (Scale)	✓ Direct
✓ No ___ Color	✓ No	___ 1/32" Line (Gray Card)	___ Video
			___ Remote

WO/WA 20002512
Procedure No. FNP-0-NDE-100.21
Revision No. 1
Examiner/Initial Sig. SCOTT R. ERICKSON Scott R. Erickson — Level II
Examiner/Initial Sig. N/A — Level N/A
Date (Month-Day-Year) 4-4-00

Equipment	Lighting	Tools		
✓ Mirror	___ Ambient	✓ Scale	___ Depth Gauge	___ Level
___ Magnifier	✓ Flashlight	___ Micrometer	___ Comparator	___
___ CCTV	___ Droplight	___ Caliper	___ Weld Gauge	___

N/A **WELDS & BASE MATERIAL VT-1**

	SAT	UN-SAT	N/A
Ground Blend Material	___	___	___
Undercut	___	___	___
Corrosion build-Up	___	___	___
Gouges	___	___	___
Evidence of Leakage	___	___	___
Arc Strikes	___	___	___
Cracks	___	___	___
Other **	___	___	___

* Provide details on unsat areas by use of supplemental data sheet.
** Provide details on other areas examined

✓ **BOLTS, STUDS, AND WASHERS VT-1**

	SAT	UN-SAT	N/A
Loose Members	___	___	✓
Cracks	✓	___	___
Corrosion	✓	___	___
Gouges	✓	___	___
Thread Damage	✓	___	___
Deformation	✓	___	___
Protective Coating	___	___	✓
Evidence of Leakage	___	___	✓
Other**	___	___	✓

Comments EXAMINED (6) STUDS & (6) NUTS AFTER REMOVAL FROM VALVE BODY. NO VISIBLE WASTAGE OF CROSS SECTIONAL AREA OR THREADED SURFACES NOTED AT TIME OF EXAM. SRE 4-4-00

FIGURE 1

SUPPORT EXAMINATION RECORD VT-3

FARLEY NUCLEAR PLANT

SOUTHERN NUCLEAR OPERATING COMPANY

Plant/Unit	Line Number/Examination Area/Weld No.	Drawing Number	Sheet No.
FARLEY / 1	Q1E21V091	N/A	

Photos	Sketch	Resolution	Technique
___ Yes ___ B&W	___ Yes	✓ 1/32" Division (Scale)	✓ Direct
✓ No ___ Color	✓ No	___ 1/32" Line (Gray Card)	___ Video
			___ Remote

(WO)/WA 20002512	
Procedure No. FNP-0-NDE-100.23	
Revision No. 3	
Examiner/Initial Sig. SCOTT R. ERICKSON Scott R. Erickson	Level II
Examiner/Initial Sig. N/A	Level N/A
Date (Month-Day-Year) 4-4-00	

Equipment	Lighting	Tools		
✓ Mirror	___ Ambient	✓ Scale	___ Depth Gauge	___ Level
___ Magnifier	✓ Flashlight	___ Micrometer	___ Comparator	___
___ CCTV	___ Droplight	___ Caliper	___ Weld Gauge	___

N/A SNUBBERS VT-3	SAT	UN-SAT	N/A
Loose Bolt or Pin Connections	___	___	___
Shaft Seal	___	___	___
Fluid Leakage	___	___	___
Fluid Tubing Condition	___	___	___
Shaft Cleanliness	___	___	___
Spherical Bearings	___	___	___
Cotter & Clevis Pins Intact	___	___	___
Other**	___	___	___

* Provide details on unsat areas by use of supplemental data sheet.

** Provide details on other areas examined.

✓ COMP. INTERNALS & MAT'L SURFACE VT-3	SAT	UN-SAT	N/A
Pitting	✓	___	___
Corrosion	✓	___	___
Erosion	✓	___	___
Foreign Material	✓	___	___
Gouged Parts	✓	___	___
Wear	✓	___	___
Evidence of Leakage	✓	___	___
Other Cracks**	___	___	✓

N/A HANGER & SUPPORTS VT-3	SAT	UN-SAT	N/A
Setting:	___	___	___
Hot ___ Cold ___	___	___	___
Misalignment	___	___	___
Damaged Members	___	___	___
Gouges	___	___	___
Arc Strikes	___	___	___
Grind Marks	___	___	___
Freedom of Movement	___	___	___
Other**	___	___	___

Comments EXAMINED FLANGE & GASKET SEATING AREA. EXAMINED (6) STUDS & (6) NUTS AFTER REMOVAL FROM VALVE BODY. NO VISIBLE WASTAGE OF CROSS SECTIONAL AREA OR THREADED SURFACES NOTED AT TIME OF EXAM SRE 4-4-00

SHARED

FIGURE 1

VISUAL EXAMINATION RECORD - VT2

FARLEY NUCLEAR PLANT

SOUTHERN NUCLEAR OPERATING COMPAN

Plant/Unit FARLEY /1	Data Package REF. 160. 17-1
WO/WA No. W00600211	Drawing Number D-351115 SHT. 3
Procedure No. FNP-0-NDE-100.22	SystemBoundaries
Revision No. 2	THE 'B' TRAIN CONTAINMENT SPRAY PIPING WAS EXAMINED IN SERVICE UNDER NORMAL OPERATING CONDITIONS. SEE ATTACHED SHEET FOR THE SYSTEM BOUNDARIES. THE EXAMINATION INCLUDED ALL VENTS, DRAINS, INSTRUMENT LINES AND TEST CONNECTIONS WITHIN THE SYSTEM BOUNDARIES.
Examiner Scott R. Erickson — Level II	
Examiner [illegible] — Level II	
Date (Month-Day-Year) 5-1-00	
SKETCH	

Examination (Per Para. 7.5)

____ Sat ✓ *Unsat

*Provide details on unsat areas (1) Q1E13V012B - LIGHT DRY BUILD-UP ON STEM (2) Q1E13V005B - LIGHT DRY BUILD-UP ON STEM GASKET (3) Q1E13P001B: LIGHT DRY BUILD-UP ON OUTBOARD SEAL; 1 DROP/MIN ACTIVE LEAK ON INBOARD SEAL.

~~Comments~~ SRE 5-1-00 THE REMAINDER OF THE SYSTEM WAS SAT.

MWO 20002653 WRITTEN TO CLEAN VALVE STEM AND ADJUST PACKING ON Q1E13V012B. ~~NOT A~~ CWD 5/15/00 MWO 20003599 written to REPAIR Q1E13P001B AS NECESSARY. Both are Not Code; items, and Reinspection is not required

Charles W Deem 5/16/00

FIGURE 1

SUPPORT EXAMINATION RECORD VT-3

FARLEY NUCLEAR PLANT

SOUTHERN NUCLEAR OPERATING COMPANY

Plant/Unit	Line Number/Examination Area/Weld No.	Drawing Number	Sheet No.
FARLEY/1	Q1E13V005B	N/A	

Photos	Sketch	Resolution	Technique
___ Yes ___ B&W	___ Yes	✓ 1/32" Division (Scale)	✓ Direct
✓ No ___ Color	✓ No	___ 1/32" Line (Gray Card)	___ Video
			___ Remote

WO/WA	20003609
Procedure No.	FNP-0-NDE-100.23
Revision No.	3
Examiner/Initial Sig.	Scott R. Erickson — Level II
Examiner/Initial Sig.	N/A — Level N/A
Date (Month-Day-Year)	5-4-00

Equipment	Lighting	Tools		
✓ Mirror	___ Ambient	✓ Scale	___ Depth Gauge	___ Level
___ Magnifier	✓ Flashlight	___ Micrometer	___ Comparator	___
___ CCTV	___ Droplight	___ Caliper	___ Weld Gauge	___

N/A SNUBBERS VT-3	SAT	UN-SAT	N/A
Loose Bolt or Pin Connections	___	___	___
Shaft Seal	___	___	___
Fluid Leakage	___	___	___
Fluid Tubing Condition	___	___	___
Shaft Cleanliness	___	___	___
Spherical Bearings	___	___	___
Cotter & Clevis Pins Intact	___	___	___
Other**	___	___	___

* Provide details on unsat areas by use of supplemental data sheet.

** Provide details on other areas examined.

✓ COMP. INTERNALS & MAT'L SURFACE VT-3	SAT	UN-SAT	N/A
Pitting	✓	___	___
Corrosion	✓	___	___
Erosion	✓	___	___
Foreign Material	✓	___	___
Gouged Parts	✓	___	___
Wear	✓	___	___
Evidence of Leakage	___	___	✓
Other Cracks**	___	___	✓

N/A HANGER & SUPPORTS VT-3	SAT	UN-SAT	N/A
Setting:	___	___	___
Hot ___ Cold ___	___	___	___
Misalignment	___	___	___
Damaged Members	___	___	___
Gouges	___	___	___
Arc Strikes	___	___	___
Grind Marks	___	___	___
Freedom of Movement	___	___	___
Other**	___	___	___

Comments EXAMINED (1) STUD & (2) NUTS AFTER REMOVAL FROM VALVE BODY. NO VISIBLE WASTAGE OF CROSS-SECTIONAL AREA OR THREADED SURFACES NOTED AT TIME OF EXAM. SRE 5-4-00

SHARED

FIGURE 1

VISUAL EXAMINATION RECORED VT-1

FARLEY NUCLEAR PLANT

SOUTHERN NUCLEAR OPERATING COMPANY

Plant/Unit	Line Number/Examination Area/Weld No.	Drawing Number	Sheet No.
FARLEY /1	Q1E13 V005 B	N/A	

Photos	Sketch	Resolution	Technique
___ Yes ___ B&W	___ Yes	✓ 1/32" Division (Scale)	✓ Direct
✓ No ___ Color	✓ No	___ 1/32" Line (Gray Card)	___ Video
			___ Remote

WO/WA 20003609
Procedure No. FNP-0-NDE-100.21
Revision No. 1
Examiner/Initial Sig. Scott R. Erickson — Level II
Examiner/Initial Sig. N/A — Level N/A
Date (Month-Day-Year) 5-4-00

Equipment	Lighting	Tools		
✓ Mirror	___ Ambient	✓ Scale	___ Depth Gauge	___ Level
___ Magnifier	✓ Flashlight	___ Micrometer	___ Comparator	___
___ CCTV	___ Droplight	___ Caliper	___ Weld Gauge	___

N/A **WELDS & BASE MATERIAL VT-1**

	SAT	UN-SAT	N/A
Ground Blend Material	___	___	___
Undercut	___	___	___
Corrosion build-Up	___	___	___
Gouges	___	___	___
Evidence of Leakage	___	___	___
Arc Strikes	___	___	___
Cracks	___	___	___
Other **	___	___	___

* Provide details on unsat areas by use of supplemental data sheet.
** Provide details on other areas examined

✓ **BOLTS, STUDS, AND WASHERS VT-1**

	SAT	UN-SAT	N/A
Loose Members	___	___	✓
Cracks	✓	___	___
Corrosion	✓	___	___
Gouges	✓	___	___
Thread Damage	✓	___	___
Deformation	✓	___	___
Protective Coating	✓	___	___
Evidence of Leakage	___	___	✓
Other**	___	___	✓

Comments EXAMINED (1) STUD & (2) NUTS AFTER REMOVAL FROM VALVE BODY. NO VISIBLE WASTAGE OF CROSS-SECTIONAL AREAS OR THREADED SURFACES NOTED AT TIME OF EXAM. SRE 5-4-00

SHARED

FIGURE 1

VISUAL EXAMINATION RECORD - VT2

FARLEY NUCLEAR PLANT

SOUTHERN NUCLEAR OPERATING COMPANY

Plant/Unit FARLEY / 1		Data Package REF. 160.16-2	Drawing Number D-351115 SHT. 3
WO/WA No. W00600211		SystemBoundaries	
Procedure No.FNP-0-NDE-100.22		THE 'A' TRAIN CONTAINMENT SPRAY PIPING WAS EXAMINED AT NORMAL OPERATING PRESSURE. SEE ATTACHED SHEET FOR THE SYSTEM BOUNDARIES. THE EXAMINATION INCLUDED ALL VENTS, DRAINS, INSTRUMENT LINES AND TEST CONNECTIONS WITHIN THE SYSTEM BOUNDARIES.	
Revision No. 2			
Examiner Scott R. Erickson	Level II		
Examiner Paul Hulsebus	Level II		
Date (Month-Day-Year) 5-3-00			
SKETCH		N A	
Examination (Per Para. 7.5)			
____ Sat ✓ *Unsat			
*Provide details on unsat areas (1) N1E13 FE95BA SEE 5-17-00 ~~N1E13FE93BA~~ - LIGHT DRY BUILD-UP AT BDC OF FLANGE. (2) Q1E13V036A HAS 1/2 DROP/MIN ACTIVE LEAK AT END CAP (THREADED CONNECTION). THE REMAINDER OF THE SYSTEM WAS SAT.			
Comments MWO 20003662 WRITTEN TO REPAIR END CAP ON Q1E13V036A AS APPROPRIATE TO STOP LEAKAGE. NOT A CODE ITEM, REINSPECTION NOT REQUIRED.			

Charles W Dean 5/15/00

SHARED

FIGURE 1

VISUAL EXAMINATION RECORED VT-1

FARLEY NUCLEAR PLANT

SOUTHERN NUCLEAR OPERATING COMPANY

Plant/Unit	Line Number/Examination Area/Weld No.	Drawing Number	Sheet No.
FARLEY 1/1	N1E13FE958A	N/A	

Photos	Sketch	Resolution	Technique
___ Yes ___ B&W ✓ No ___ Color	___ Yes ✓ No	✓ 1/32" Division (Scale) ___ 1/32" Line (Gray Card)	✓ Direct ___ Video ___ Remote

(WO)/WA	20003663
Procedure No.	FNP-0-NDE-100.21
Revision No.	1
Examiner/Initial Sig.	Scott R. Erickson — Level II
Examiner/Initial Sig.	N/A — Level N/A
Date (Month-Day-Year)	5-8-00

Equipment	Lighting	Tools		
✓ Mirror	___ Ambient	✓ Scale	___ Depth Gauge	___ Level
___ Magnifier	✓ Flashlight	___ Micrometer	___ Comparator	___
___ CCTV	___ Droplight	___ Caliper	___ Weld Gauge	___

N/A **WELDS & BASE MATERIAL VT-1**

	SAT	UN-SAT	N/A
Ground Blend Material	___	___	___
Undercut	___	___	___
Corrosion build-Up	___	___	___
Gouges	___	___	___
Evidence of Leakage	___	___	___
Arc Strikes	___	___	___
Cracks	___	___	___
Other **	___	___	___

* Provide details on unsat areas by use of supplemental data sheet.

** Provide details on other areas examined

✓ **BOLTS, STUDS, AND WASHERS VT-1**

	SAT	UN-SAT	N/A
Loose Members	___	___	✓
Cracks	✓	___	___
Corrosion	✓*	___	___
Gouges	✓	___	___
Thread Damage	✓	___	___
Deformation	✓	___	___
Protective Coating	___	___	✓
Evidence of Leakage	___	___	✓
Other**	___	___	✓

* MINOR SURFACE CORROSION ON STUD

Comments EXAMINED (1) STUD & (2) NUTS AFTER REMOVAL FROM FLANGE. NO VISIBLE WASTAGE OF CROSS-SECTIONAL AREA OR THREADED SURFACES NOTED AT TIME OF EXAM. SRE 5-8-00

FIGURE 1

SUPPORT EXAMINATION RECORD VT-3

FARLEY NUCLEAR PLANT

SOUTHERN NUCLEAR OPERATING COMPANY

Plant/Unit	Line Number/Examination Area/Weld No.	Drawing Number	Sheet No.
FARLEY 1/1	N1E13FE958A	N/A	

Photos	Sketch	Resolution	Technique
___ Yes ___ B&W	___ Yes	✓ 1/32" Division (Scale)	✓ Direct
✓ No ___ Color	✓ No	___ 1/32" Line (Gray Card)	___ Video
			___ Remote

(WO)/WA	20003663
Procedure No.	FNP-0-NDE-100.23
Revision No.	3
Examiner/Initial Sig.	Scott R. Erickson — Level II
Examiner/Initial Sig.	N/A — Level N/A
Date (Month-Day-Year)	5-8-00

Equipment	Lighting	Tools		
✓ Mirror	___ Ambient	✓ Scale	___ Depth Gauge	___ Level
___ Magnifier	✓ Flashlight	___ Micrometer	___ Comparator	
___ CCTV	___ Droplight	___ Caliper	___ Weld Gauge	

N/A SNUBBERS VT-3	SAT	UN-SAT	N/A
Loose Bolt or Pin Connections	___	___	___
Shaft Seal	___	___	___
Fluid Leakage	___	___	___
Fluid Tubing Condition	___	___	___
Shaft Cleanliness	___	___	___
Spherical Bearings	___	___	___
Cotter & Clevis Pins Intact	___	___	___
Other**	___	___	___

* Provide details on unsat areas by use of supplemental data sheet.

** Provide details on other areas examined.

✓ COMP. INTERNALS & MAT'L SURFACE VT-3	SAT	UN-SAT	N/A
Pitting	✓	___	___
Corrosion	✓*	___	___
Erosion	✓	___	___
Foreign Material	✓	___	___
Gouged Parts	✓	___	___
Wear	✓	___	___
Evidence of Leakage	___	___	✓
Other Cracks**	___	___	✓

* MINOR SURFACE CORROSION ON STUD

N/A HANGER & SUPPORTS VT-3	SAT	UN-SAT	N/A
Setting:	___	___	___
Hot ___ Cold ___	___	___	___
Misalignment	___	___	___
Damaged Members	___	___	___
Gouges	___	___	___
Arc Strikes	___	___	___
Grind Marks	___	___	___
Freedom of Movement	___	___	___
Other**	___	___	___

Comments EXAMINED (1) STUD & (2) NUTS AFTER REMOVAL FROM FLANGE. NO VISIBLE WASTAGE OF CROSS-SECTIONAL AREA OR THREADED SURFACES NOTED AT TIME OF EXAM. SRE 5-8-00

SHARED

FIGURE 1

VISUAL EXAMINATION RECORD - VT2

FARLEY NUCLEAR PLANT

SOUTHERN NUCLEAR OPERATING COMPANY

Plant/Unit FARLEY 1/1	Data Package REF. 160.16.3
WO/WA No. W00600211	Drawing Number D-351115 SHT. 3
Procedure No. FNP-0-NDE-100.22	SystemBoundaries
Revision No. 2	THE CONTAINMENT SPRAY PIPING WAS EXAMINED IN SERVICE UNDER NORMAL OPERATING CONDITIONS. SEE ATTACHED SHEET FOR THE SYSTEM BOUNDARIES. THE EXAMINATION INCLUDED ALL VENTS, DRAINS, INSTRUMENT LINES AND TEST CONNECTIONS WITHIN THE SYSTEM BOUNDARIES.
Examiner Scott R. Erickson — Level II	
Examiner N/A — Level N/A	
Date (Month-Day-Year) 4-26-00	
SKETCH	N/A

Examination (Per Para. 7.5)

_____ Sat ✓ *Unsat

*Provide details on unsat areas Q1E13V004A HAS LIGHT DRY BUILD-UP ON GASKET AND VALVE STEM. THE REMAINDER OF THE SYSTEM WAS SAT.

Comments

FIGURE 1

SUPPORT EXAMINATION RECORD VT-3

FARLEY NUCLEAR PLANT

SOUTHERN NUCLEAR OPERATING COMPANY

Plant/Unit	Line Number/Examination Area/Weld No.	Drawing Number	Sheet No.
FARLEY/1	Q1E13V004A	N/A	

Photos	Sketch	Resolution	Technique
___ Yes ___ B&W	___ Yes	✓ 1/32" Division (Scale)	✓ Direct
✓ No ___ Color	✓ No	___ 1/32" Line (Gray Card)	___ Video
			___ Remote

WO/WA 20003445
Procedure No. FNP-0-NDE-100.23
Revision No. 3
Examiner/Initial Sig. Scott R. Erickson — Level II
Examiner/Initial Sig. N/A — Level N/A
Date (Month-Day-Year) 5-1-00

Equipment	Lighting	Tools		
✓ Mirror	___ Ambient	✓ Scale	___ Depth Gauge	___ Level
___ Magnifier	✓ Flashlight	___ Micrometer	___ Comparator	___
___ CCTV	___ Droplight	___ Caliper	___ Weld Gauge	___

N/A SNUBBERS VT-3	SAT	UN-SAT	N/A
Loose Bolt or Pin Connections	___	___	___
Shaft Seal	___	___	___
Fluid Leakage	___	___	___
Fluid Tubing Condition	___	___	___
Shaft Cleanliness	___	___	___
Spherical Bearings	___	___	___
Cotter & Clevis Pins Intact	___	___	___
Other**	___	___	___

* Provide details on unsat areas by use of supplemental data sheet.

** Provide details on other areas examined.

✓ COMP. INTERNALS & MAT'L SURFACE VT-3	SAT	UN-SAT	N/A
Pitting	✓	___	___
Corrosion	✓	___	___
Erosion	✓	___	___
Foreign Material	✓	___	___
Gouged Parts	✓	___	___
Wear	✓	___	___
Evidence of Leakage	___	___	✓
Other Cracks**	___	___	✓

N/A HANGER & SUPPORTS VT-3	SAT	UN-SAT	N/A
Setting:	___	___	___
Hot ___ Cold ___	___	___	___
Misalignment	___	___	___
Damaged Members	___	___	___
Gouges	___	___	___
Arc Strikes	___	___	___
Grind Marks	___	___	___
Freedom of Movement	___	___	___
Other**	___	___	___

Comments EXAMINED (1) STUD & (2) NUTS AFTER REMOVAL FROM VALVE BODY. NO VISIBLE WASTAGE OF CROSS-SECTIONAL AREA OR THREADED SURFACES NOTED AT TIME OF EXAM. SRE 5-1-00

SHARED

FIGURE 1

VISUAL EXAMINATION RECORED VT-1

FARLEY NUCLEAR PLANT

SOUTHERN NUCLEAR OPERATING COMPANY

Plant/Unit	Line Number/Examination Area/Weld No.	Drawing Number	Sheet No.
FARLEY 1	Q1E13V004A	N/A	

Photos	Sketch	Resolution	Technique
___ Yes ___ B&W	___ Yes	✓ 1/32" Division (Scale)	✓ Direct
✓ No ___ Color	✓ No	___ 1/32" Line (Gray Card)	___ Video
			___ Remote

WO/WA 20003445
Procedure No. FNP-0-NDE-100.21
Revision No. 1
Examiner/Initial Sig. Scott R. Erickson — Level II
Examiner/Initial Sig. N/A — Level N/A
Date (Month-Day-Year) 5-1-00

Equipment	Lighting	Tools		
✓ Mirror	___ Ambient	✓ Scale	___ Depth Gauge	___ Level
___ Magnifier	✓ Flashlight	___ Micrometer	___ Comparator	___
___ CCTV	___ Droplight	___ Caliper	___ Weld Gauge	___

N/A **WELDS & BASE MATERIAL VT-1**

	SAT	UN-SAT	N/A
Ground Blend Material	___	___	___
Undercut	___	___	___
Corrosion build-Up	___	___	___
Gouges	___	___	___
Evidence of Leakage	___	___	___
Arc Strikes	___	___	___
Cracks	___	___	___
Other **	___	___	___

* Provide details on unsat areas by use of supplemental data sheet.
** Provide details on other areas examined

✓ **BOLTS, STUDS, AND WASHERS VT-1**

	SAT	UN-SAT	N/A
Loose Members	___	___	✓
Cracks	✓	___	___
Corrosion	✓	___	___
Gouges	✓	___	___
Thread Damage	✓	___	___
Deformation	✓	___	___
Protective Coating	✓	___	___
Evidence of Leakage	___	___	✓
Other**	___	___	✓

Comments EXAMINED (1) STUD & (2) NUTS AFTER REMOVAL FROM VALVE BODY. NO VISIBLE WASTAGE OF CROSS SECTIONAL AREA OR THREADED SURFACES NOTED AT TIME OF EXAM. SRE 5-1-00

SHARED

FIGURE 1

VISUAL EXAMINATION RECORD - VT2

FARLEY NUCLEAR PLANT

SOUTHERN NUCLEAR OPERATING COMPANY

Plant/Unit FARLEY 1/1	Data Package REF. 160.17-3
WO/WA No. W00600211	Drawing Number D-351115 SHT. 3
Procedure No. FNP-0-NDE-100.22	SystemBoundaries
Revision No. 2	THE 'B' TRAIN CONTAINMENT SPRAY PIPING WAS EXAMINED IN SERVICE UNDER NORMAL OPERATING CONDITIONS. SEE ATTACHED SHEET FOR THE SYSTEM BOUNDARIES. THE EXAMINATION INCLUDED ALL VENTS, DRAINS, INSTRUMENT LINES AND TEST CONNECTIONS WITHIN THE SYSTEM BOUNDARIES.
Examiner [signature] Level II	
Examiner N/A Level N/A	
Date (Month-Day-Year) 4-26-00	
SKETCH	N/A

Examination (Per Para. 7.5)

____ Sat ✓ *Unsat

*Provide details on unsat areas ① Q1E13V040B - LIGHT DRY BUILD-UP ON END CAP ② Q1E13V004B - LIGHT DRY BUILD-UP ON GASKET (M-101 PREVIOUSLY WRITTEN). THE REMAINDER OF THE SYSTEM WAS SAT.

Comments MWO 20003450 written to clean and repair Q1E13V040B as appropriate. Not a Code item, reinspection not required. [signature]

5/16/00

SHARED

FIGURE 1

SUPPORT EXAMINATION RECORD VT-3

FARLEY NUCLEAR PLANT

SOUTHERN NUCLEAR OPERATING COMPANY

Plant/Unit	Line Number/Examination Area/Weld No.	Drawing Number	Sheet No.
FARLEY/1	Q1E13V004B	N/A	

Photos	Sketch	Resolution	Technique
___ Yes ___ B&W	___ Yes	✓ 1/32" Division (Scale)	✓ Direct
✓ No ___ Color	✓ No	___ 1/32" Line (Gray Card)	___ Video
			___ Remote

WO/WA	20003448
Procedure No.	FNP-0-NDE-100.23
Revision No.	3
Examiner/Initial Sig.	Scott R. Erickson — Level II
Examiner/Initial Sig.	N/A — Level N/A
Date (Month-Day-Year)	5-1-00

Equipment	Lighting	Tools		
✓ Mirror	___ Ambient	✓ Scale	___ Depth Gauge	___ Level
___ Magnifier	✓ Flashlight	___ Micrometer	___ Comparator	
___ CCTV	___ Droplight	___ Caliper	___ Weld Gauge	

N/A SNUBBERS VT-3	SAT	UN-SAT	N/A
Loose Bolt or Pin Connections	___	___	___
Shaft Seal	___	___	___
Fluid Leakage	___	___	___
Fluid Tubing Condition	___	___	___
Shaft Cleanliness	___	___	___
Spherical Bearings	___	___	___
Cotter & Clevis Pins Intact	___	___	___
Other**	___	___	___

* Provide details on unsat areas by use of supplemental data sheet.

** Provide details on other areas examined.

✓ COMP. INTERNALS & MAT'L SURFACE VT-3	SAT	UN-SAT	N/A
Pitting	✓	___	___
Corrosion	✓	___	___
Erosion	✓	___	___
Foreign Material	✓	___	___
Gouged Parts	✓	___	___
Wear	✓	___	___
Evidence of Leakage	___	___	✓
Other Cracks**	___	___	✓

N/A HANGER & SUPPORTS VT-3	SAT	UN-SAT	N/A
Setting:	___	___	___
Hot ___ Cold ___	___	___	___
Misalignment	___	___	___
Damaged Members	___	___	___
Gouges	___	___	___
Arc Strikes	___	___	___
Grind Marks	___	___	___
Freedom of Movement	___	___	___
Other**	___	___	___

Comments EXAMINED (1) STUD & (2) NUTS AFTER REMOVAL FROM VALVE BODY. NO VISIBLE WASTAGE OF CROSS SECTIONAL AREA OR THREADED SURFACES NOTED AT TIME OF EXAM. SRE 5-1-00

SHARED

FIGURE 1

VISUAL EXAMINATION RECORED VT-1

FARLEY NUCLEAR PLANT

SOUTHERN NUCLEAR OPERATING COMPANY

Plant/Unit	Line Number/Examination Area/Weld No.	Drawing Number	Sheet No.
FARLEY 1 1	Q1E13V004B	N/A	

Photos	Sketch	Resolution	Technique
___ Yes ___ B&W ✓ No ___ Color	___ Yes ✓ No	✓ 1/32" Division (Scale) ___ 1/32" Line (Gray Card)	✓ Direct ___ Video ___ Remote

WO/WA	20003448
Procedure No.	FNP-0-NDE-100.21
Revision No.	1
Examiner/Initial Sig.	Scott R. Erickson
Level	II
Examiner/Initial Sig.	N/A
Level	N/A
Date (Month-Day-Year)	5-1-00

Equipment	Lighting	Tools		
✓ Mirror	___ Ambient	✓ Scale	___ Depth Gauge	___ Level
___ Magnifier	✓ Flashlight	___ Micrometer	___ Comparator	___
___ CCTV	___ Droplight	___ Caliper	___ Weld Gauge	___

N/A **WELDS & BASE MATERIAL VT-1**

	SAT	UN-SAT	N/A
Ground Blend Material	___	___	___
Undercut	___	___	___
Corrosion build-Up	___	___	___
Gouges	___	___	___
Evidence of Leakage	___	___	___
Arc Strikes	___	___	___
Cracks	___	___	___
Other **	___	___	___

* Provide details on unsat areas by use of supplemental data sheet.

** Provide details on other areas examined

✓ **BOLTS, STUDS, AND WASHERS VT-1**

	SAT	UN-SAT	N/A
Loose Members	___	___	✓
Cracks	✓	___	___
Corrosion	✓	___	___
Gouges	✓	___	___
Thread Damage	✓	___	___
Deformation	✓	___	___
Protective Coating	✓	___	___
Evidence of Leakage	___	___	✓
Other**	___	___	✓

Comments EXAMINED (1) STUD & (2) NUTS AFTER REMOVAL FROM VALVE BODY. NO VISIBLE WASTAGE OF CROSS SECTIONAL AREA OR THREADED SURFACES NOTED AT TIME OF EXAM. SRE 5-1-00

FIGURE C-1

NDE INDICATION EVALUATION REPORT
Farley Nuclear Plant

3 10 year Interval 1 40 Month Period 2 Outage Unit 1 / IER No. **012** Date **3/29/00**

PART I FINDINGS

Sketch Ref: **ALA2-4500** NDE Method: **UT** Procedure/Rev. **FNP-0-NDE-100.31 Rev. 7**
Item No. **2L1**
Component Inspected: **Pipe Long Seam Weld (Main Steam)**
Description of Indication

During ultrasonic inspection of weld ALA2-4500-2L1 (Long Seam), a reflector was recorded per procedure with a peak amplitude of 58% DAC.

Prepared By **Danny Cordes SNC L/III** DRC Date **03/29/2000**

PART II SNC NDE INSPECTOR ASSESSMENT

Code References: **1989 ASME Section XI**

Evaluation: ID Geometry

Bases: **Evaluated as geometry per ASME Article III-4512.**

Typical ultrasonic reflectors resulting from ID geometry (reference the ultrasonic data report S00F1U197).

Review of Previous Examinations: **Data compares with 1988 examination report.**

NDE Inspector **Danny Cordes** DRC Certification Level **III** Date **03/29/00**

FIGURE C-1

PART III SNC EVALUATION AND DISPOSITION

Cause of Indication: **Geometric reflector from piping geometry.**

Action Required to Correct Indication: **None Required**

MSR Number: **N/A**

LER Yes _____ No **X** 10CFR 21 Yes _____ No **X**

Corrective Action Taken:

None Required

Corrective Action Initiated to Prevent Recurrence:

None Required

Prepared By [signature] Date 3-30-00

Approved By [signature] Date 3/30/00

ANII REVIEW: [signature] 3/30/00

SHARED

FARLEY NUCLEAR PLANT
Ultrasonic Calibration and Examination Record

FNP-0-NDE-100.31
Southern Nuclear Operating Company

Unit	Sketch/Component No.	Date	Sheet No.	Page
1	ALA2-4500-2L1	3/25/00	S00F1U197	1 of 2

Procedure/Rev./TCN	Couplant/Batch No.	Thermometer SN/Cal Due Date	Linearity Sheet No.
FNP-0-NDE-100.31 / 7 / N/A	SONOTRACE 40 / 94243	38081 / 8/27/2000	S00F1L003

Instrument			Search Unit		Calibration Block	
Instrument	STAVELEY		Transducer Mfg.	KBA	Cal. Blk. No.	ALA-24
Serial No.	136-898K		Serial No.	009KTR	Thickness	1.20"
	Ax. dB	Circ. dB	Size	.50	Cal. Temp.	67°
Ref.	28.6	31.8	Frequency/Mode	2.25 / S	Cal. In	0840
Scan	38.6	41.8	"A" Dimension	0.5"	Cal. Chk.	0950
Reject	OFF		Nominal Angle	45	Cal. Out	1110
Frequency	2.25		Measured Angle	45	Ref. Blk. No.	796484
Mode	P/E		Cable Type	RG174	Reflector	HOLE
Damping	500 OHM		Cable Length	15'	Amplitude/Sweep	25%/1.2

Axial Scan Calibration				Circ. Scan Calibration			
Cal. Refl.	Signal Amp.	Sweep Div.	Wmax	Cal. Refl.	Signal Amp.	Sweep Div.	Wmax
1T	80	2.0	1.2	1T	80	2.1	1.3
2T	40	4.0	2.3	2T	40	4.2	2.6
3T	20	6.0	3.5				
4T	15	8.0	4.6				

Calibration Remarks:
NONE

Comp. Temp.: 60° °F Configuration: PIPE LONG SEAM Wo Location WELD CL Lo Location INT WELD 3

Scan Dir.	Results NI	NRI	RI	Ind. No.	% DAC	Length L1	Lmax	L2	Reference Measurement W1	Wmax	W2	Sweep Position S1	Smax	S2	Thickness 1"< --	C/L	-- >1"	Notes:
2			●	1	58%	82.5	83.0	83.5		1.25			2.5		1.32	1.62	1.32	
5	●			N/A														
7	●			N/A														
8	●			N/A														

Examination/Limitation Remarks: MS-R119 (WS) LIMITS SCAN AREA

Total Length of Weld	Crown Width	Total Length of Weld Examined	Extent of Perpendicular Scans (W)	Extent of Parallel Scans (L)
109.25"	2.1"	5 (L) 91.25" 2 (L) 91.25" 7 & 8 (W) 91.25"	5 - from 1.25" to NL 2 - from 1.25" to NL	From (5) NL to (2) NL

Primary Examiner	Level	Assistant Examiner	Level	Non-Technical Review	Date
JOSEPH D. FUNYAK	II	N/A	N/A	J. Eric Aycock	3-29-00

SNC NDE Level II/III Review	Date	Percentage of Code Coverage	ANI Review	Date
Gary Cooke L/III	3-29-00	N/A %		3/30/00

Figure 1

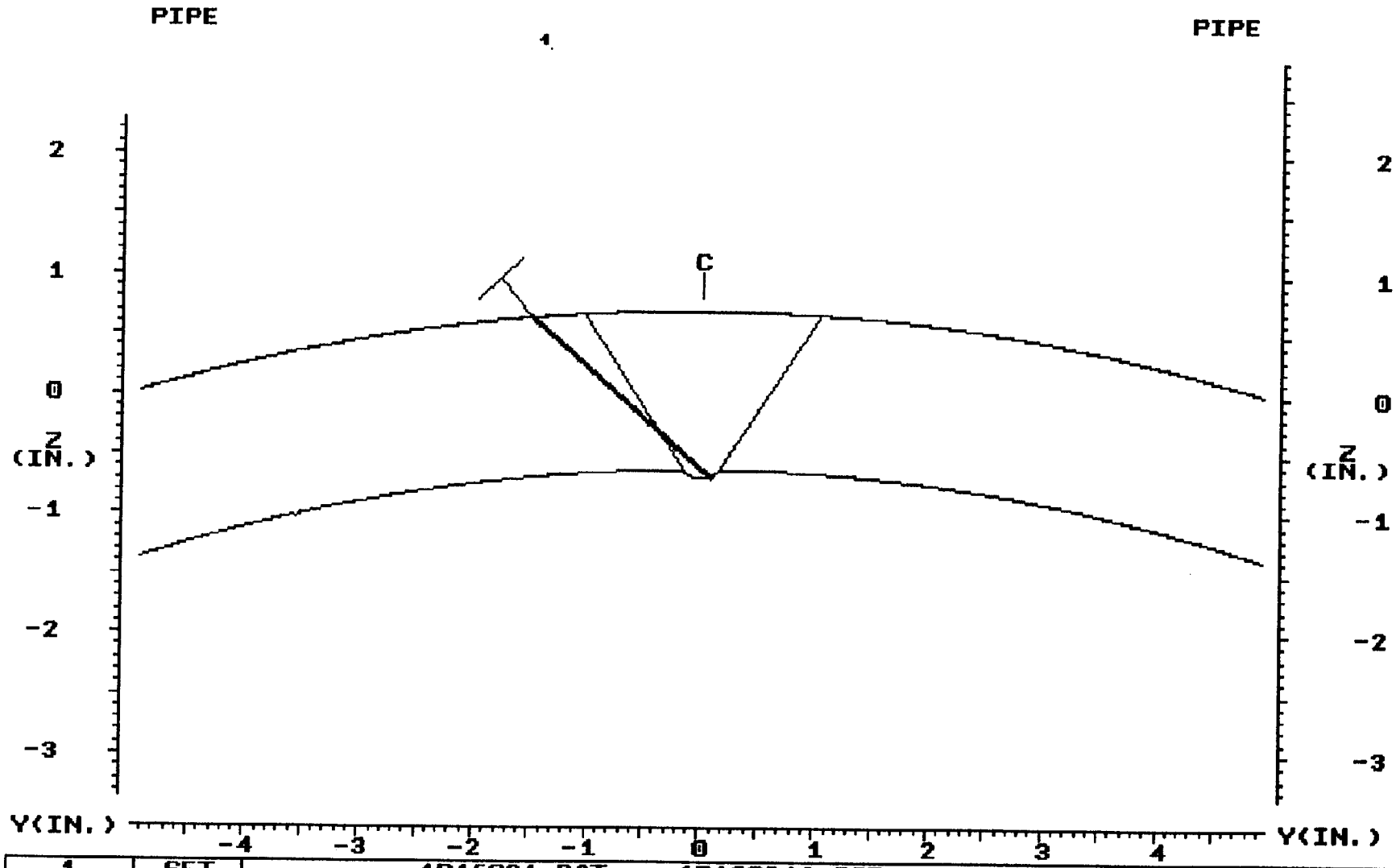

1	SET	1R16021.DAT 1R16021A.SCR							SET
1.50	DEP								DEP
2.12	MP	45 IN # 1 - ID GEOMETRY / SEE IER 1R16 012							MP
41.90	TOF								TOF
	ARC	COMPARES WITH 1988 DATA							FAN
	GATE								GATE
0.050	STEP	DR CORDES L/III DRC							STEP
	EXIT	MAKERAY	UTILITY	LEFT	RIGHT	TOP	PRINT	EXIT	EXIT

PLANT: FARLEY 1
SYSTEM: MAIN STEAM
COMPONENT: ALA2-4500-2L1

3/29/00
9:16

CIRC. POS.: 83" ALONG LS
ANALYST: DR CORDES L/III
CAL. SHEET: S00F1U197

2 OF 2

FIGURE C-1

NDE INDICATION EVALUATION REPORT
Farley Nuclear Plant

3 10 year Interval 1 40 Month Period 2 Outage Unit 1 / IER No. 013 Date 4/20/00

PART I FINDINGS

Sketch Ref: **ALA1-4200** NDE Method: **UT** Procedure/Rev. **FNP-0-NDE-100.41 Rev. 2 TCN 2A**
Item No. **5R**
Component Inspected: **RC LOOP B SAFE END TO ELBOW**
Description of Indication

During the preservice ultrasonic inspection of weld ALA1-4200-5R (Safe end to Elbow), a reflector was recorded. The indication was evaluated as an ID surface geometry.

Prepared By **J. Eric Aycock SNC L/III** J. Eric Aycock L/III Date **04/20/00**

PART II SNC NDE INSPECTOR ASSESSMENT

Code References: **1989 ASME Section XI**

Evaluation: **ASME Code acceptable geometric indication**

Bases: Indication is from ID geometry caused by grinding of the ID surface.* A surface creeping wave transducer was used to scan the weld from the I.D. surface. No indication was observed. ID surface profile taken in area of concern, and the indication plots as a geometric reflector. The ID surface had a PT exam performed per Section III, no indications. Conservatively, the indication was evaluated to Table IWB-3514-2, as a surface planar flaw with a depth of .1", length of .15", t=3.0". a/l=.50, a/t=3.3% Code allowable for a PSI surface indication is 8.9%. Therefore the indication would be acceptable.

* Signal was dampened from the I.D. surface. GRL 4-21-00

Review of Previous Examinations:

No previous examination. This was the preservice examination during the SGRP.

NDE Inspector **Gary Lofthus** Gary L. Lofthus Certification Level **III** Date **04/20/00**

FIGURE C-1

PART III SNC EVALUATION AND DISPOSITION

Cause of Indication: **ID surface geometry due to grinding.**

Action Required to Correct Indication: **None Required**

MSR Number: **N/A**

LER Yes _____ No **X** 10CFR 21 Yes _____ No **X**

Corrective Action Taken:

None Required

Corrective Action Initiated to Prevent Recurrence:

None Required

Prepared By [signature] Date 4-20-00

Approved By [signature] Date 4/21/00

SNII REVIEW: [signature] 4/21/00

SHaRED

FARLEY NUCLEAR PLANT
Ultrasonic Calibration and Examination Record

FNP-0-NDE-100.41
Southern Nuclear Operating Company

Unit	Sketch/Component No.	Date	Sheet No.
1	ALA1-4200-5R	4/20/00	S00F1U267

Page 1 of 2

Procedure/Rev./TCN	Couplant/Batch No.	Thermometer SN/Cal Due Date	Linearity Sheet No.
FNP-0-NDE-100.41 / 2 / 2A	Ultragel II / 00125	38193 / 8/27/2000	S00F1L001

Instrument		Search Unit		Calibration Block	
Instrument	STAVELEY	Transducer Mfg.	KBA	Cal. Blk. No.	ALA/APR-33
Serial No.	136-896K	Serial No.	D20267/D20268	Thickness	2.45"
	Ax. dB / Circ. dB	Size	2 (1.0")	Cal. Temp.	80
Ref.	58 / NA	Frequency/Mode	1.0 / L	Cal. In	1130
Scan	64 / NA	"A" Dimension	.82"	Cal. Chk.	N/A
Reject	OFF	Nominal Angle	45	Cal. Out	1350
Frequency	1.0 MHZ	Measured Angle	45	Ref. Blk. No.	NA
Mode	DUAL	Cable Type	RG 174	Reflector	NA
Damping	500 Ohms	Cable Length	15"	Amplitude/Sweep	NA

Axial Scan Calibration				Circ. Scan Calibration			
Cal. Refl.	Signal Amp.	Sweep Div.	Wmax	Cal. Refl.	Signal Amp.	Sweep Div.	Wmax
1/4	30	1.5	.62	NA	NA	NA	NA
1/2	80	3.0	1.2	NA	NA	NA	NA
3/4	45	4.5	1.85	NA	NA	NA	NA
ID	25	6.1	2.5	NA	NA	NA	NA
				NA	NA	NA	NA

Calibration Remarks:
NO ADDITIONAL DB NEEDED TO RAISE ID NOTCH TO DAC.

Comp. Temp.: 80 °F Configuration: SAFE-END TO ELBOW Wo Location V-STAMP Lo Location TDC

Scan Dir.	Results NI	NRI	RI	Ind. No.	% DAC	Length L1	Lmax	L2	Reference Measurement W1	Wmax	W2	Sweep Position S1	Smax	S2	Thickness 1"<--	C/L	--->1"	Notes:
2			●	1	100%	33.95	34	34.1	2.87	3.0	3.125	3.92	4.38	4.7	3.4	3.0	3.2	SEE IER-13 GGA 4-20-00

ELBOW GGA 4-20-00

Examination/Limitation Remarks: EXAMINED FROM ~~SAFE-END~~ SIDE. INDICATION CAN BE SEEN AT LOW AMPUITUDE AT VARIOUS LOCATIONS AROUND THE WELD.

* COMBINED CODE COVERAGE FROM ALL SCANS. GGA 4-20-00

Total Length of Weld	Crown Width	Total Length of Weld Examined	Extent of Perpendicular Scans (W)	Extent of Parallel Scans (L)
106.5	2.2	5 (L) NA 2 (L) NL 7 & 8 (W) NA	5 - from NA to NA 2 - from NL to .9"	From (5) NA to (2) NA

Primary Examiner	Level	Assistant Examiner	Level	Non-Technical Review	Date
JOHN W. BELL John W Bell	II	GEORGE A. MORINI	II	Terry Styron	4-20-00

SNC NDE Level II/III Review	Date	Percentage of Code Coverage	ANII Review	Date
J. Eric Clyborne 2-III	4-20-00	* 73.8 %	CGWard	4/21/00

Figure 1

Revision 7

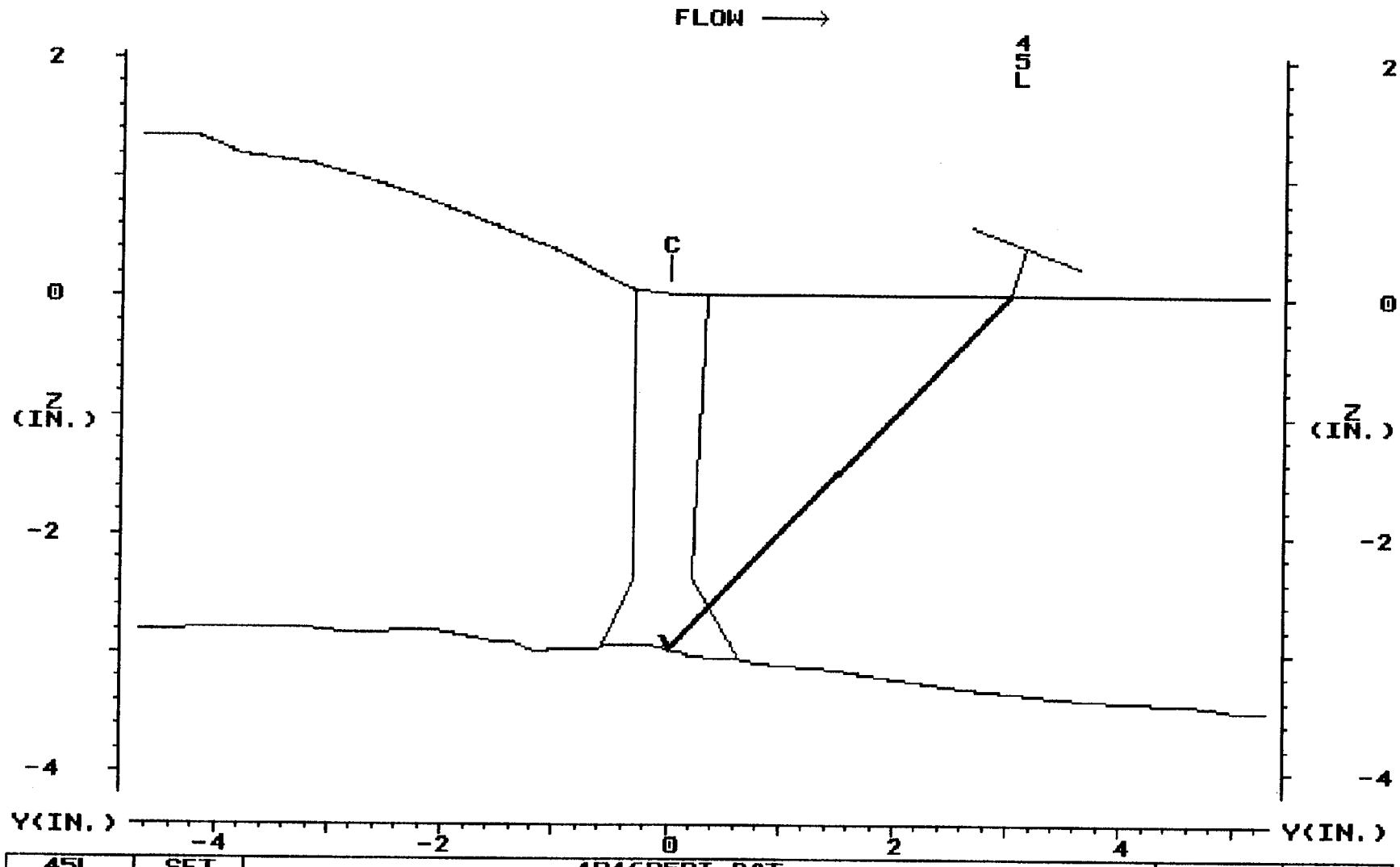

45L	SET	1R16B5RI.DAT							SET
3.10	DEP								DEP
4.38	MP	INDICATION IS FROM ID GEOMETRY CAUSED BY GRINDING OF							MP
46.58	TOF	WELD. ACTUAL ID PROFILE IS SHOWN. SURFACE CREEPING							TOF
	ARC	WAVE TRANSDUCER USED TO SCAN THE WELD FROM THE I.D.							FAN
	GATE	SURFACE. NO PLANAR INDICATIONS FOUND. SEE IER-13.							GATE
0.010	STEP	JEA 4-20-00							STEP
	EXIT	MAKERAY	UTILITY	LEFT	RIGHT	TOP	PRINT	EXIT	EXIT

PLANT: FARLEY UNIT 1 1R16 4/20/00 CIRC. POS.: 34"
SYSTEM: RSG-B RCS COLD LEG ANALYST: J.ERIC AYCOCK L/III
COMPONENT: ALA1-4200-5R CAL. SHEET: S00F1U267

FIGURE C-1

NDE INDICATION EVALUATION REPORT
Farley Nuclear Plant

3 10 year Interval 1 40 Month Period 2 Outage Unit 1 / IER No. **014** Date **5/07/00**

PART I FINDINGS

Sketch Ref: **ALA2-4150** NDE Method: **UT** Procedure/Rev. **FNP-0-NDE-100.31 Rev. 7**
Item No. **21R**
Component Inspected: **Elbow to Reducer**
Description of Indication

During ultrasonic inspection of weld ALA2-4150 -21R (elbow to reducer), 4 reflectors were recorded per procedure with a peak amplitude of 65% DAC.

Prepared By **Gary Lofthus SNC L/III** Date **05/07/2000**

PART II SNC NDE INSPECTOR ASSESSMENT

Code References: **1989 ASME Section XI**

Evaluation: ID Root Geometry

Bases: **Evaluated as geometry per ASME Article III-4512.**

Typical ultrasonic reflectors resulting from the root of the weld (reference the ultrasonic data report S00F1U274). Can be seen from both sides of the weld. Review of the RT film shows a root that is intermittent, consistent with the Ultrasonic data.

Review of Previous Examinations: **Preservice Examination during SGRP 1R16 outage. No previous Data.**

NDE Inspector **Gary Lofthus** Certification Level **III** Date **05/07/00**

FIGURE C-1

PART III SNC EVALUATION AND DISPOSITION

Cause of Indication: **Geometric reflector from root of the weld.**

Action Required to Correct Indication: **None Required**

MSR Number: **N/A**

LER Yes _____ No **X** 10CFR 21 Yes _____ No **X**

Corrective Action Taken:

None Required

Corrective Action Initiated to Prevent Recurrence:

None Required

Prepared By Gary R. Roffler Date 5-7-00

Approved By David Hartline Date 5/10/00

ANII Review: C G Wand 5/12/00

SHARED

FARLEY NUCLEAR PLANT
Ultrasonic Calibration and Examination Record

FNP-0-NDE-100.31
Southern Nuclear Operating Company

Unit	Sketch/Component No.	Date	Sheet No.
1	ALA2-4150-21R	5/6/00	S00F1U274

Page 1 of 3

Procedure/Rev./TCN	Couplant/Batch No.	Thermometer SN/Cal Due Date	Linearity Sheet No.
FNP-0-NDE-100.31 / 7 / N/A	ULTRAGEL II / 00125	38193 / 8/27/2000	S00F1L019

Instrument		Search Unit		Calibration Block	
Instrument	PANAMETRICS	Transducer Mfg.	KBA	Cal. Blk. No.	ALA-25
Serial No.	91060212	Serial No.	41016	Thickness	.750"
	Ax. dB / Circ. dB	Size	.50	Cal. Temp.	75
Ref.	29 / 33.1	Frequency/Mode	2.25 / S	Cal. In	2000
Scan	35 / 39.1	"A" Dimension	.35	Cal. Chk.	2137
Reject	0	Nominal Angle	45	Cal. Out	2338
Frequency	2.25	Measured Angle	45	Ref. Blk. No.	86-4333
Mode	PE	Cable Type	RG-174	Reflector	SDH@35 db
Damping	50	Cable Length	6'	Amplitude/Sweep	36%/2.7 div.

Axial Scan Calibration				Circ. Scan Calibration			
Cal. Refl.	Signal Amp.	Sweep Div.	Wmax	Cal. Refl.	Signal Amp.	Sweep Div.	Wmax
1T	80	3.0	.7	1T	80	4.0	.8
2T	45	6.0	1.45	2T	60	8.0	1.6
3T	30	9.0	2.2				

Calibration Remarks:

0° MSEB 4mHz Serial No. 06605 used for lamination Scan.

Comp. Temp.: 83 °F Configuration: ELBOW TO REDUCER

Wo Location V-STAMP Lo Location TDC

Scan Dir.	Results NI	NRI	RI	Ind. No.	% DAC	Length L1	Lmax	L2	Reference Measurement W1	Wmax	W2	Sweep Position S1	Smax	S2	Thickness 1"<--	C/L	-->1"	Notes:
5			●	1	65	42.5"	4.3"	6.0"		1.0"			1.37"					Intermittent 360
2			●	2	50	37"	41.2"	43.5"		.75"			1.37"					
2			●	3	35	29"	31"	32"		.75"			1.37"					
2			●	4	50	24.75"	25"	25.25"		.75			1.37"					

Examination/Limitation Remarks: LAM SCAN PERFORMED IN BASE MATERIAL OF INTEREST PRIOR TO ANGLE BEAM EXAMINATION. LAM SCAN AMPLITUDE MAINTAIN 50 TO 80 PERCENT OF FULL SCREEN HEIGHT.

Total Length of Weld	Crown Width	Total Length of Weld Examined	Extent of Perpendicular Scans (W)	Extent of Parallel Scans (L)
44"	1.1"	5 (L) 44" 2 (L) 44" 7 & 8 (W) 44"	5 - from NL to NL 2 - from NL to NL	From (5) NL to (2) NL

Primary Examiner	Level	Assistant Examiner	Level	Non-Technical Review	Date
GARY A. LOFTHUS	III	J. ERIC AYCOCK	III		5-7-00
SNC NDE Level II/III Review		**Date**	**Percentage of Code Coverage**	**ANII Review**	**Date**
		5-7-00	100 %		5/12/00

Figure 1

Revision 7

FARLEY NUCLEAR PLANT
Ultrasonic Examination Continuation Record

FNP-0-NDE-100.31
Southern Nuclear Operating Company

Unit	Sketch/Component No.	Date	Sheet No.
1	ALA2-4150-21R	5/6/00	S00F1U274

Page 2 of 3

Procedure/Rev./TCN: FNP-0-NDE-100.31 / 7 / N/A

Appendix III Exams. D1 = N/A D2 = N/A Measured Angle = 45 °

Configuration: ELBOW TO REDUCER

Scan Dir.	Crown Width	Results NI	Results NRI	Results RI	Ref No	% DAC	Length L1	Length Lmax	Length L2	Reference Measurement W1	Reference Measurement Wmax	Reference Measurement W2	Sweep Position S1	Sweep Position Smax	Sweep Position S2	Thickness 1"<--	Thickness C/L	Thickness -->1"	Notes:
7		●		N/A															Results: NRI
8		●		N/A															Results: NRI

Examination/Limitation Remarks: **LAM SCAN PERFORMED IN BASE MATERIAL OF INTEREST PRIOR TO ANGLE BEAM EXAMINATION. LAM SCAN AMPLITUDE MAINTAIN 50 TO 80 PERCENT OF FULL SCREEN HEIGHT.**

Total Length of Weld	Crown Width	Total Length of Weld Examined	Extent of Perpendicular Scans (W)	Extent of Parallel Scans (L)
44"	1.1"	5 (L) 44" 2 (L) 44" 7 & 8 (W) 44"	5 - from NL to NL 2 - from NL to NL	From (5) NL to (2) NL

Primary Examiner	Level	Assistant Examiner	Level	Non-Technical Review	Date
GARY A. LOFTHUS	III	J. ERIC AYCOCK	III		5-7-00

SNC NDE Level II/III Review	Date	Percentage of Code Coverage	ANII Review	Date
	5-16-00	100 %		5/16/00

Figure 1

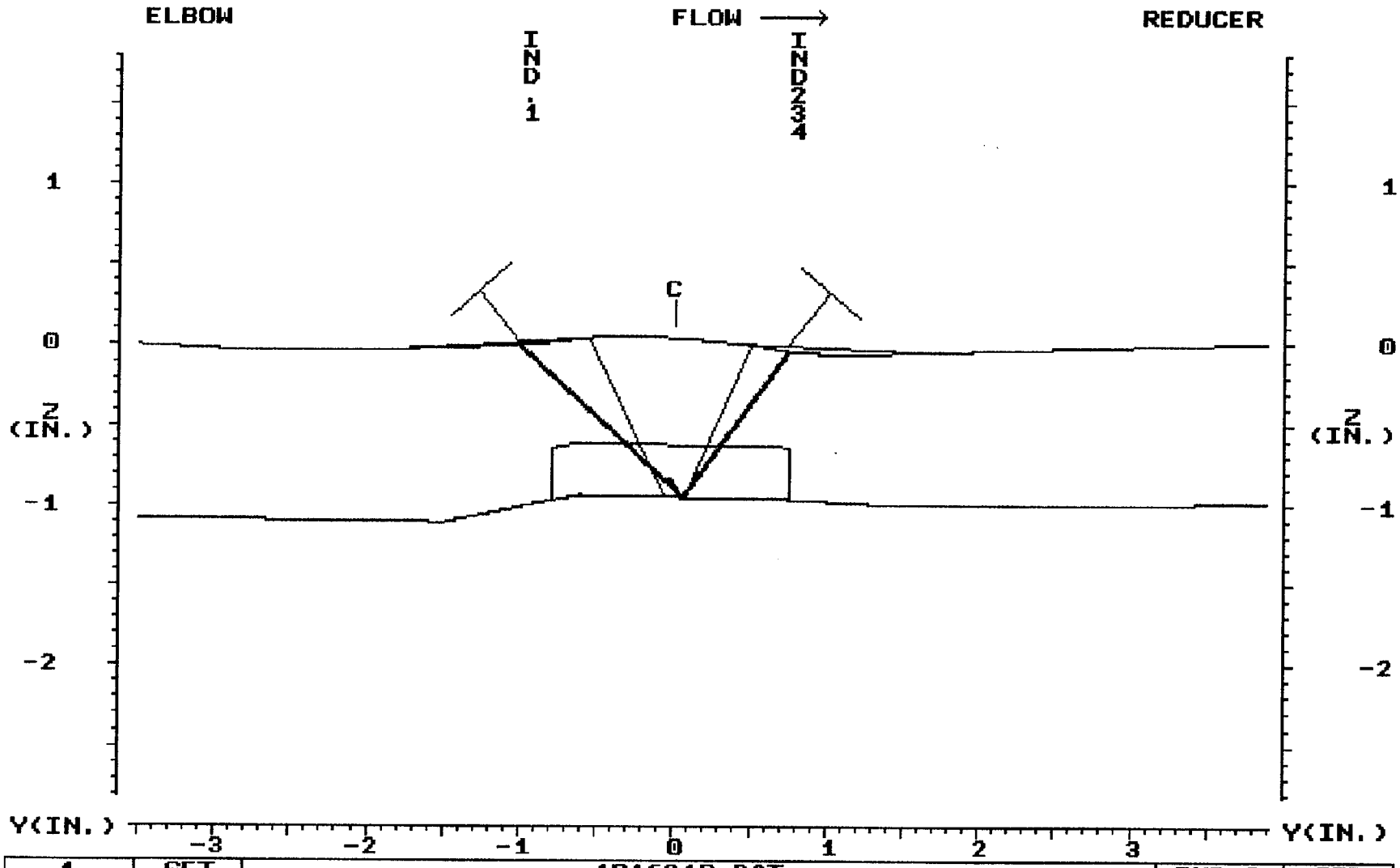

1	SET	1R1621R.DAT							IND.2	SET
0.97	DEP								0.97	DEP
1.37	MP	INDICATION 1,2,3,4 ALL EVALUATED AS ID ROOT GEOMETRY							1.37	MP
29.89	TOF								29.89	TOF
	ARC									ARC
	GATE									GATE
0.010	STEP								0.010	STEP
	EXIT	MAKERAY	UTILITY	LEFT	RIGHT	TOP	PRINT	EXIT		EXIT

JEA 5-7-00

PLANT: PLANT FARLEY UNIT 1 5/6/00 CIRC. POS.: 90 DEGREES
SYSTEM: FEEDWATER SG 'A' ANALYST: J. ERIC AYCOCK L/III
COMPONENT: ALA2-4150-21R 23:36 CAL. SHEET: S00F1U274

Sheet 3 of 3

Ultrasonic Thickness and Contour Examination Record

Southern Nuclear Operating Company

Unit	Weld Number	Sheet No.	Date
1	ALA2-4150-21R	S00F1U280 1 of 2	5/6/00

D/Drawing Number	Couplant/Batch Number	Instrument Manufacturer
ALA2-4150	ULTRAGEL II / 00125	PANAMETRICS

Material Type	Calibration Standard/ Serial No.	Model Number	Serial Number
☒ C/S ☐ S/S Other	CS STEP / 86-4257	EPOCH II	91060212

Examiner	SNT Level	Transducer Manufacturer	Type	Size
GARY A. LOFTHUS	III	KBA	MSEB	3.5X10MM

Examiner	SNT Level	Serial Number	Frequency
J. ERIC AYCOCK	III	06605	4 MHz

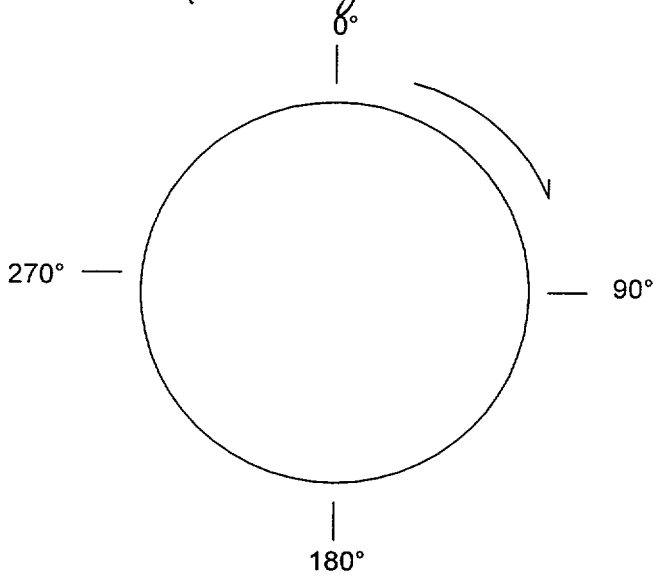

Location	0°	90 °	180°	270°
A	0.942"	1.013"	1.042"	0.964"
B	0.947"	0.940"	1.032"	0.956"
C	1.042"	0.964"	0.973"	0.952"
D	0.981"	0.964"	0.960"	0.986"
E	1.088"	1.083"	1.117"	1.189"

(thicker ⟶)

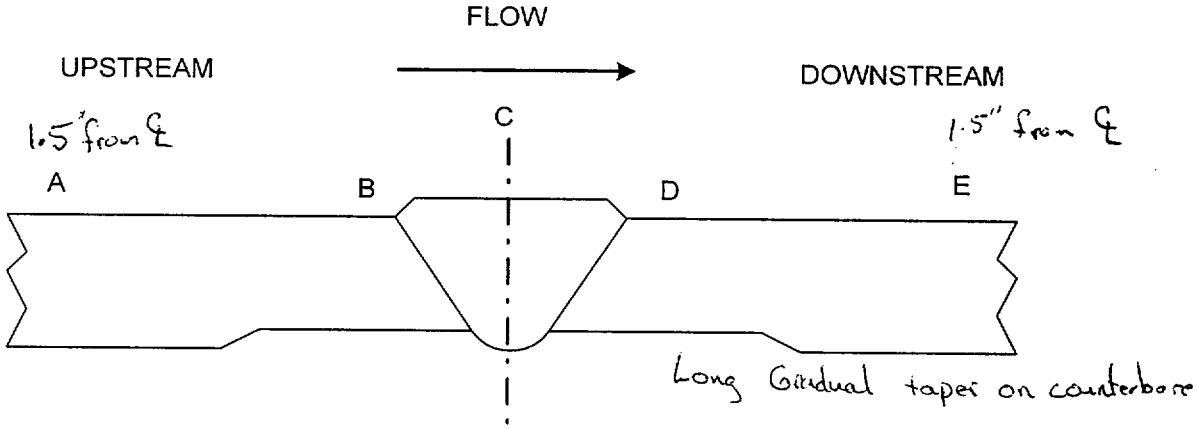

COUNTERBORE

Elbow — UPSTREAM

Reducer — DOWNSTREAM

REMARKS:

See Sheet 2 for Weld Profiles.

E Level II/III Review	Level	Date	Non-Technical Review	Date
J. Eric Aycock	III	5-7-00	Gary A. Lofthus	5-7-00

ALA2-4150-21R

0°

RED

ELBOW

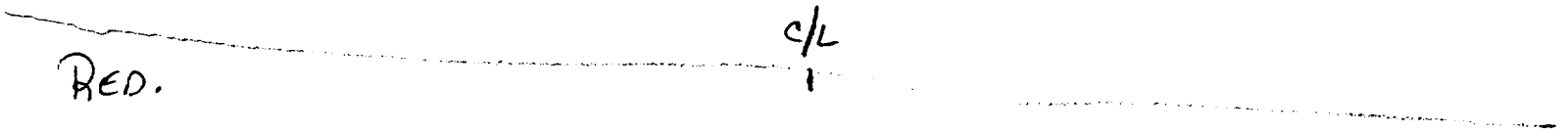

RED.

ELBOW

90°

RED.

ELBOW

180°

ELBOW

RED.

270°

BECHTEL

WPIR #	NONDESTRUCTIVE EXAMINATION REPORT MAGNETIC PARTICLE EXAMINATION		REPORT #
P-FWA-005			MT-00-113
JOB # 23734	JOB NAME FARLEY UNIT 1 SGR	SURFACE CONDITION ☒ GROUND ☐ AS WELDED	DATE 5/6/00
ISO / DWG # FSK-M-012	ITEM / COMP ID Feedwater	TIME OF EXAM ☐ N/A ☐ PRE-PWHT ☒ POST-PWHT	COMPONENT TEMP Ambient
CODE / WELD CLASS ASME XI CL 2	COMPONENT CONFIGURATION Elbow to Reducer	MATL TYPE ☒ CARBON STEEL	PROCEDURE & REVISION MT-ASME III / XI REV. 2

EQUIPMENT ☒ YOKE ☒ AC
☒ CALIBRATION VERIFIED DA400/SN 10004
☐ 10 LBS cal. due 8/17/00

EXAM MEDIUM ☒ DRY ☒ VISIBLE
MFR MAGNAFLUX DESIG/COLOR 8A-RED BATCH 99H114

INDICATION CODE: NI=NO INDICATIONS NRI=NO RECORDABLE INDICATIONS C=CRACK
ROUND=ROUNDED INDICATION LINEAR=LINEAR INDICATION

PART OR WELD #	ACC (√)	REJ (√)	IND CODE	REMARKS
FW19C1SG	✓		NI	None

SKETCH / COMMENTS

Lift Plate # 1058

FNP ISI # ALA2-4150-21R

M&TE NO. N/A

CAL. DUE DATE: N/A

EXAMINER	LEVEL	DATE
Wade A. Selby	II	5/6/00
REVIEW		**DATE**
Tony R Marette		5/6/00

Lv III 5-7-00

Daniel Lifsher

ANII REVIEW: C G Wand 5/12/00

FIGURE C-1

NDE INDICATION EVALUATION REPORT
Farley Nuclear Plant

3 10 year Interval 1 40 Month Period 2 Outage Unit 1 / IER No. **015** Date **5/07/00**

PART I FINDINGS

Sketch Ref: **ALA2-4150** NDE Method: **UT** Procedure/Rev. **FNP-0-NDE-100.31 Rev. 7**
Item No. **22R**
Component Inspected: **Reducer to Nozzle**
Description of Indication

During ultrasonic inspection of weld ALA2-4150-22R (reducer to nozzle), 2 reflectors were recorded per procedure with a peak amplitude of 35% DAC.

Prepared By **Gary Lofthus SNC L/III** Date **05/07/2000**

PART II SNC NDE INSPECTOR ASSESSMENT

Code References: **1989 ASME Section XI**

Evaluation: Ind. 1 - Code Acceptable Slag. Ind. 2 - ID Root Geometry

Bases: **Ind. 1 evaluated as code acceptable slag confirmed by review of RT film. The indication was evaluated to ASME Section XI Table IWB-3514-1, acceptable subsurface indication. Actual a/t=2.8%, allowable a/t=10.15%, see attached evaluation worksheet.**
Ind. 2 was evaluated as geometry per ASME Article III-4512. Typical ultrasonic reflectors resulting from the root of the weld (reference the ultrasonic data report S00F1U276).
Review of the RT film shows a root that is intermittent, consistent with the Ultrasonic data.

Review of Previous Examinations: **Preservice Examination during SGRP 1R16 outage. No previous Data.**

NDE Inspector **Gary Lofthus** Certification Level **III** Date **05/07/00**

FIGURE C-1

PART III SNC EVALUATION AND DISPOSITION

Cause of Indication: **Ind. 1 is a weld defect, slag, (code acceptable).**
Ind. 2 is a geometric reflector from root of the weld.

Action Required to Correct Indication: **None Required**

MSR Number: **N/A**

LER Yes _____ No **X** 10CFR 21 Yes _____ No **X**

Corrective Action Taken:

None Required

Corrective Action Initiated to Prevent Recurrence:

None Required

Prepared By [signature] Date 5-7-00

Approved By [signature] Date 5/10/00

ANII REVIEW: [signature] 5/12/00

SHARED

FARLEY NUCLEAR PLANT
Ultrasonic Calibration and Examination Record

FNP-0-NDE-100.31
Southern Nuclear Operating Company

Unit	Sketch/Component No.	Date	Sheet No.	
1	ALA2-4150-22R	5/6/00	S00F1U276	Page 1 of 3

Procedure/Rev./TCN	Couplant/Batch No.	Thermometer SN/Cal Due Date	Linearity Sheet No.
FNP-0-NDE-100.31 / 7 / N/A	ULTRAGEL II / 00125	38193 / 8/27/2000	S00F1L019

Instrument		Search Unit		Calibration Block	
Instrument	PANAMETRICS	Transducer Mfg.	KBA	Cal. Blk. No.	ALA-51
Serial No.	91060212	Serial No.	41016	Thickness	.79"
	Ax. dB / Circ. dB	Size	.50	Cal. Temp.	75
Ref.	27.1 / 32.1	Frequency/Mode	2.25 / S	Cal. In	1945
Scan	33.1 / 38.1	"A" Dimension	.35	Cal. Chk.	2220
Reject	0	Nominal Angle	45	Cal. Out	2336
Frequency	2.25	Measured Angle	45	Ref. Blk. No.	86-4333
Mode	PE	Cable Type	RG-174	Reflector	SDH@35 db
Damping	HI/400	Cable Length	6'	Amplitude/Sweep	36%/2.8

Axial Scan Calibration				Circ. Scan Calibration			
Cal. Refl.	Signal Amp.	Sweep Div.	Wmax	Cal. Refl.	Signal Amp.	Sweep Div.	Wmax
1T	80	3.0	0.8	1T	80	4.0	0.8
2T	65	6.0	1.5	2T	60	8.0	1.6
3T	40	9.0	2.3				

Calibration Remarks:
Ax. Cal. stored in location A0.
Circ. Cal. stored in location A1.
0 deg. Cal. stored in location B0.
0° MSEB Serial No. 06605 used for lamination scan.

Comp. Temp.: 83 °F Configuration: REDUCER TO NOZZLE Wo Location V-STAMP Lo Location TDC

Scan Dir.	Results NI	NRI	RI	Ind. No.	% DAC	Length L1	Lmax	L2	Reference Measurement W1	Wmax	W2	Sweep Position S1	Smax	S2	Thickness 1"< --	C/L	--> 1"	Notes:
2			●	1	25	31.4"	31.5"	31.6"	*	.85"	*	*	1.1"	*				*Spot ind. Butted at toe
5			●	2	35	2.9"	13"	17"	.55"	.7"	.9"	1.1"	1.21"	1.32"				Riding on toe / intermittent
7		●		N/A														Low level root/ verified by RT 15% DAC
8		●		N/A														

Examination/Limitation Remarks: LAM SCAN PERFORMED IN BASE MATERIAL OF INTEREST PRIOR TO ANGLE BEAM EXAMINATION. LAM SCAN AMPLITUDE MAINTAIN 50 TO 80 PERCENT OF FULL SCREEN HEIGHT.

Total Length of Weld	Crown Width	Total Length of Weld Examined	Extent of Perpendicular Scans (W)	Extent of Parallel Scans (L)
50.25"	1.25"	5 (L) 50.25 2 (L) 50.25 7 & 8 (W) 50.25	5 - from NL to NL 2 - from NL to NL	From (5) NL to (2) NL

Primary Examiner	Level	Assistant Examiner	Level	Non-Technical Review	Date
GARY A. LOFTHUS	III	J. ERIC AYCOCK	III		5-7-00
SNC NDE Level II/III Review		Date	Percentage of Code Coverage	ANII Review	Date
	III	5-7-00	100 %		5/12/00

Figure 1

Revision 7

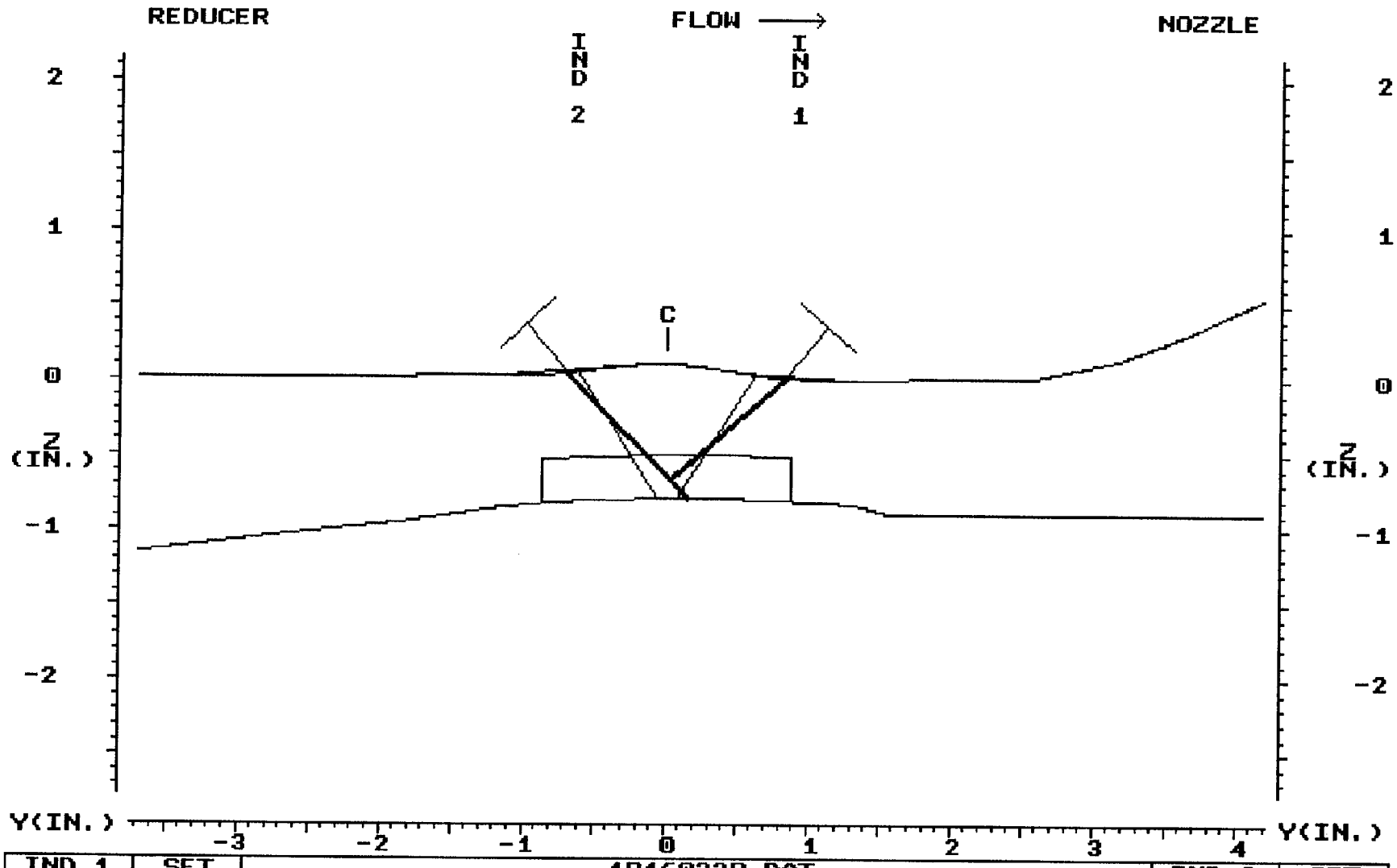

IND 1									IND 2	
0.78	SET	1R16022R.DAT							0.86	SET
1.10	DEP								1.21	DEP
25.55	MP	INDICATION 1 - CODE ACCEPTABLE SLAG CONFIRMED ON RT							27.37	MP
	TOF	FILM. SEE ATTACHED SHEET FOR TABLE CALCULATION.								TOF
	ARC									ARC
	GATE	INDICATION 2 - ROOT GEOMETRY								GATE
0.025	STEP								0.010	STEP
	EXIT	MAKERAY	UTILITY	LEFT	RIGHT	TOP	PRINT	EXIT		EXIT

JEA 5-7-00 Hal 5-7-00

PLANT: PLANT FARLEY UNIT 1 5/6/00 CIRC. POS.: 80 DEGREES
SYSTEM: FEEDWATER 'A' ANALYST: J. ERIC AYCOCK L/III
COMPONENT: ALA2-4150-22R 0:08 CAL. SHEET: S00F1U276

INDICATION EVALUATION WORKSHEET TABLE IWB-3514-1 (CLASS 1 PRESERVICE INSPECTION CARBON S

WELD NUMBER ALA2-4150-22R DATE 05/07/00 SHEET NO. S00F1U276 ANGLE 45 SHEAR Page 3 of 3

SURFACE CONNECTED FLAW=1; SUBSURFACE=0 0

Y=S/a, if S is less than .4d, then it is a surface flaw

IF S<.4d THE FLAW INDICATION IS CLASSIFIED AS A SURFACE INDI

IF Y>1.0, USE Y=1.0

INDICATION NUMBER	LENGTH L	THICKNESS "t" excluding clad	NEAR DEPTH	FAR DEPTH	Surface a value	Subsurface a value	(LIGAMENT) S	a/l	a/t	Y(S/a)
1	0.20	0.89	0.71	0.76	0.05	0.03	0.13	0.13	2.81	5.20

1.00

CLASS 1 TABLE FOR ALLOWABLE a/t%

ASPECT RATIO	SURFACE	SUBSURFACE	*Y=			SURFACE TABLE IF not exact t	IF exact t	SUBSURFACE TABLE IF not exact t	IF exact t
0.000	6.812	8.528				6.812	0.000	8.528	0.000
0.050	7.312	8.844				7.312	0.000	8.844	0.000
0.100	8.028	9.644				8.028	0.000	9.644	0.000
0.125	8.478	10.152	10.15	——>	ACCEPTABLE	SUBSURFACE DEFECT			
0.150	8.928	10.660				8.928	0.000	10.660	0.000
0.200	9.852	11.752				9.852	0.000	11.752	0.000
0.250	9.852	11.500				9.852	0.000	11.500	0.000
0.300	9.852	11.500				9.852	0.000	11.500	0.000
0.350	9.852	11.500				9.852	0.000	11.500	0.000
0.400	9.852	11.500				9.852	0.000	11.500	0.000
0.450	9.852	11.500				9.852	0.000	11.500	0.000
0.500	9.852	11.500				9.852	0.000	11.500	0.000

PRESERVICE TABLE IWB-3514-1 (ALLOWABLE a/t % VALUES)

Aspect Ratio	<= 0.312"	INTERPOLATED THICKNESS 0.89	1"	INTERPOLATED THICKNESS not used	2"	INTERPOLATED THICKNESS not used	3"	INTERPOLATED THICKNESS not used
a/l	SURFACE		SURFACE		SURFACE		SURFACE	
0	7.4	6.81	6.7	7.70	5.7	7.70	4.7	7.70
0.05	7.9	7.31	7.2	8.20	6.2	8.60	5.0	8.00
0.10	8.7	8.03	7.9	9.00	6.8	9.40	5.5	9.10
0.15	9.6	8.93	8.8	10.10	7.5	10.30	6.1	10.00
0.20	9.6	9.85	9.9	11.40	8.4	11.40	6.9	11.40
0.25	9.6	9.85	9.9	10.30	9.5	12.90	7.8	12.90
0.30	9.6	9.85	9.9	10.30	9.5	10.90	8.8	14.50
0.35	9.6	9.85	9.9	10.30	9.5	10.90	8.8	14.50
0.40	9.6	9.85	9.9	10.30	9.5	10.90	8.8	14.50
0.45	9.6	9.85	9.9	10.30	9.5	10.90	8.8	14.50
0.50	9.6	9.85	9.9	10.30	9.5	10.90	8.8	14.50
	SUBSURFACE (ALL *Y)		SUBSURFACE (ALL *Y)		SUBSURFACE (ALL *Y)		SUBSURFACE (ALL *Y)	
0	9.2	8.53	8.4	9.60	7.2	10.00	5.8	9.40
0.05	9.6	8.84	8.7	9.90	7.5	10.30	6.1	10.00
0.10	10.4	9.64	9.5	10.90	8.1	11.10	6.6	10.80
0.15	11.5	10.66	10.5	12.00	9.0	12.40	7.3	11.80
0.20	11.5	11.75	11.8	13.50	10.1	13.90	8.2	13.30
0.25	11.5	11.50	11.5	11.60	11.4	15.60	9.3	15.30
0.30	11.5	11.50	11.5	11.60	11.4	13.20	10.5	17.40
0.35	11.5	11.50	11.5	11.60	11.4	10.60	11.8	19.30
0.40	11.5	11.50	11.5	11.60	11.4	10.60	11.8	16.00
0.45	11.5	11.50	11.5	11.60	11.4	10.60	11.8	12.40
0.50	11.5	11.50	11.5	11.60	11.4	10.60	11.8	12.40

Ultrasonic Thickness and Contour Examination Record

Southern Nuclear Operating Company

Unit	Weld Number	Sheet No.	Date
1	ALA2-4150-22R	S00F1U281	5/6/00

D/Drawing Number	Couplant/Batch Number	Instrument Manufacturer
ALA2-4150	ULTRAGEL II / 00125	PANAMETRICS

Material Type	Calibration Standard/ Serial No.	Model Number	Serial Number
☒ C/S ☐ S/S Other	CS STEP / 86-4257	EPOCH II	91060212

Examiner	SNT Level	Transducer Manufacturer	Type	Size
GARY A. LOFTHUS [signature]	III	KBA	MSEB	3.5X10MM

Examiner	SNT Level	Serial Number	Frequency
J. ERIC AYCOCK [signature]	III	06605	4 MHz

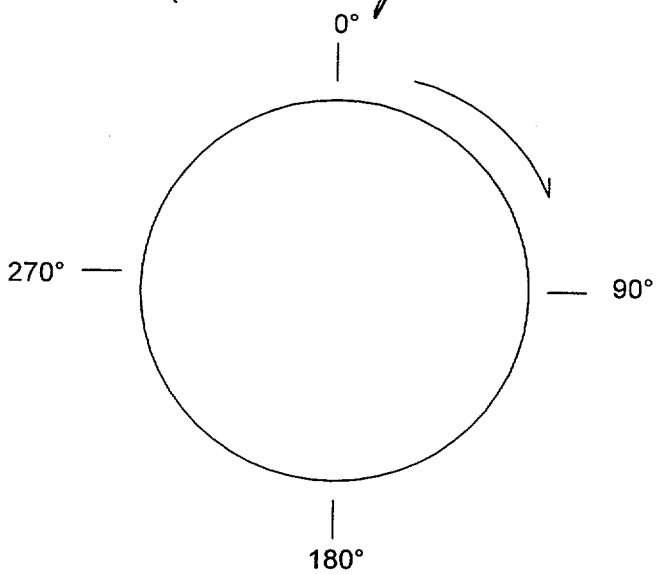

Location	0°	90 °	180°	270°
A	1.134"	1.170"	1.198"	1.153"
B	0.895"	0.846"	0.952"	0.973"
C	0.902"	0.881"	0.852"	0.902"
D	0.837"	0.837"	0.822"	0.846"
E	0.865"	0.902"	0.862"	0.865"

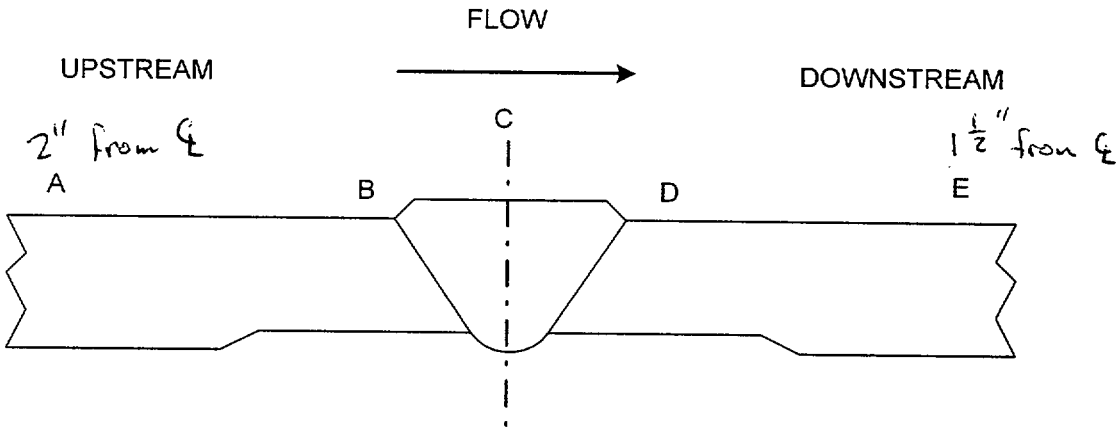

COUNTERBORE

Reducer — UPSTREAM

Nozzle — DOWNSTREAM

REMARKS:

QEA 5-7-00

~~NONE~~ See Page 2 for weld profiles.

DE Level II/III Review	Level	Date	Non-Technical Review	Date
Gary A. Lofthus	III	5-7-00	J. Eric Aycock	5-7-00

0°

RED

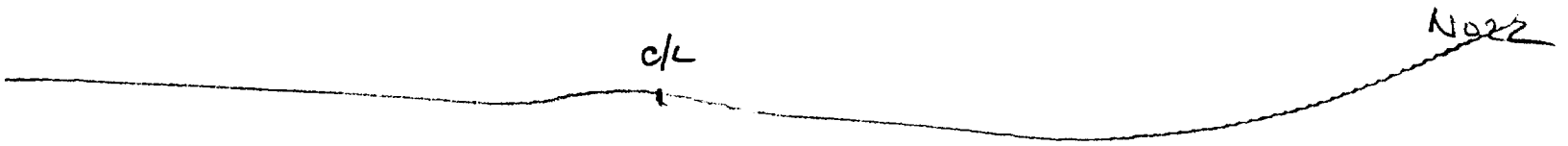

90°

RED

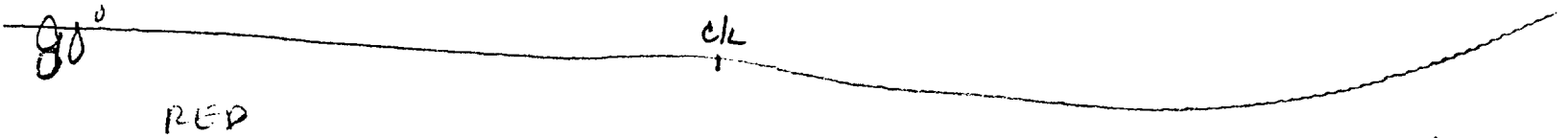

N022

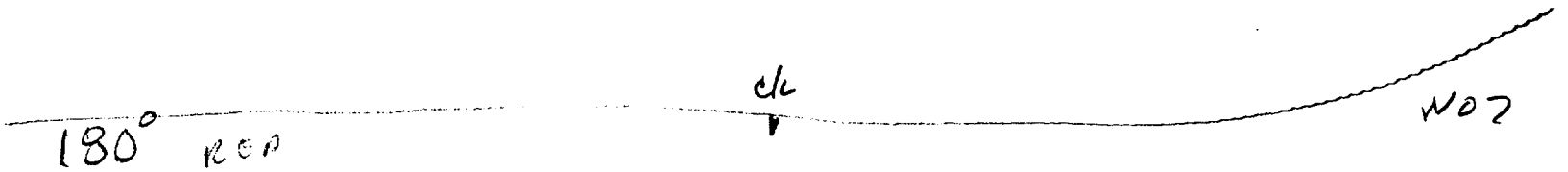

180° RED

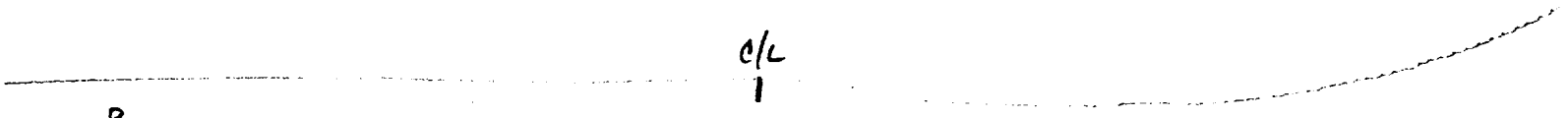

270° RED

N022

BECHTEL

WPIR #	NONDESTRUCTIVE EXAMINATION REPORT MAGNETIC PARTICLE EXAMINATION		REPORT #
P-FWA-005			MT-00-111
JOB # 23734	JOB NAME FARLEY UNIT 1 SGR	SURFACE CONDITION ☒ GROUND ☐ AS WELDED	DATE 5/6/00
ISO / DWG # FSK-M-012	ITEM / COMP ID Feedwater	TIME OF EXAM ☐ N/A ☐ PRE-PWHT ☒ POST-PWHT	COMPONENT TEMP Ambient
CODE / WELD CLASS ASME XI CL.2	COMPONENT CONFIGURATION Reducer to Nozzle	MATL TYPE ☒ CARBON STEEL	PROCEDURE & REVISION MT-ASME III / XI REV. 2
EQUIPMENT ☒ YOKE ☒ AC ☒ CALIBRATION VERIFIED DA400/SN 10004 ☐ 10 LBS cal. due 8/17/00	EXAM MEDIUM ☒ DRY ☒ VISIBLE MFR MAGNAFLUX DESIG/COLOR 8A-RED BATCH 99H114		

INDICATION CODE: NI=NO INDICATIONS NRI=NO RECORDABLE INDICATIONS C=CRACK
ROUND=ROUNDED INDICATION LINEAR=LINEAR INDICATION

PART OR WELD #	ACC (√)	REJ (√)	IND CODE	REMARKS
FW 20 R1/SG	✓		NI	None

SKETCH / COMMENTS

Lift Plate # 1058

FNP ISI # ALA2-4150-22R

M&TE NO. N/A

CAL. DUE DATE: N/A

EXAMINER	LEVEL	DATE
Wade A. Selby	II	5/6/00
REVIEW		**DATE**
Larry R. Martin	II	5/6/00

Lv. III 5-7-00

Joseph R. Rotches
Addl Review: CG Wand 5/12/00

FIGURE C-1

NDE INDICATION EVALUATION REPORT
Farley Nuclear Plant

3 10 year Interval 1 40 Month Period 2 Outage Unit 1 / IER No. **016** Date **5/11/00**

PART I FINDINGS

Sketch Ref: **ALA2-4350** NDE Method: **UT** Procedure/Rev. **FNP-0-NDE-100.31 Rev. 7**
Item No. **24R**
Component Inspected: **Reducer to Nozzle**
Description of Indication

During ultrasonic inspection of weld ALA2-4350-24R (reducer to nozzle), 4 reflectors were recorded per procedure with a peak amplitude of 25% DAC.

Prepared By **J. Eric Aycock SNC L/III** J. Eric Aycock Date **05/11/2000**

PART II SNC NDE INSPECTOR ASSESSMENT

Code References: **1989 ASME Section XI**

Evaluation: ID Root Geometry

Bases:
Indications 1-4 were evaluated as geometry per ASME Article III-4512. Typical ultrasonic reflectors resulting from the root of the weld (reference the ultrasonic data report S00F1U287).
Review of the RT film shows a root that is pushed through (convexity) in these areas, consistent with the Ultrasonic data.

Review of Previous Examinations: **Preservice Examination during SGRP 1R16 outage. No previous Data.**

NDE Inspector **J. Eric Aycock** J. Eric Aycock Certification Level **III** Date **05/11/00**

FIGURE C-1

PART III SNC EVALUATION AND DISPOSITION

Cause of Indication: **Indications are geometric reflectors from the root of the weld.**

Action Required to Correct Indication: **None Required**

MSR Number: **N/A**

LER Yes ____ No **X** 10CFR 21 Yes ____ No **X**

Corrective Action Taken: None Required

Corrective Action Initiated to Prevent Recurrence: None Required

Prepared By J. Eric Aycock L-III Date 5-11-00

Approved By David Hastlins Date 5/12/00

on III Reviewing Ward 5/12/00

SHARED

FARLEY NUCLEAR PLANT
Ultrasonic Calibration and Examination Record

FNP-0-NDE-100.31
Southern Nuclear Operating Company

Unit	Sketch/Component No.	Date	Sheet No.	
1	ALA2-4350-24R	5/11/00	S00F1U287	Page 1 of 2

Procedure/Rev./TCN	Couplant/Batch No.	Thermometer SN/Cal Due Date	Linearity Sheet No.
FNP-0-NDE-100.31 / 7 / N/A	ULTRAGEL II / 00125	38193 / 8/27/2000	S00F1L019

Instrument			Search Unit		Calibration Block	
Instrument	PANAMETRICS		Transducer Mfg.	KBA	Cal. Blk. No.	ALA-51
Serial No.	91060212		Serial No.	41016	Thickness	.79
	Ax. dB	Circ. dB	Size	.50	Cal. Temp.	75
Ref.	27.1	33.3	Frequency/Mode	2.25 / S	Cal. In	09:10 hrs
Scan	33.1	39.3	"A" Dimension	.35	Cal. Chk.	N/A
Reject	0		Nominal Angle	45	Cal. Out	12:30 hrs
Frequency	2.25		Measured Angle	45	Ref. Blk. No.	N/A
Mode	PE		Cable Type	RG-174	Reflector	N/A
Damping	HI / 400		Cable Length	6'	Amplitude/Sweep	N/A

Axial Scan Calibration				Circ. Scan Calibration			
Cal. Refl.	Signal Amp.	Sweep Div.	Wmax	Cal. Refl.	Signal Amp.	Sweep Div.	Wmax
1T	80	3.0	.7	1T	80	4.0	.8
2T	45	6.0	1.45	2T	60	8.0	1.6
3T	30	9.0	2.2				

Calibration Remarks:
06605 MSEB 0 deg. was used to perform lamination scan.

Comp. Temp.: 84 °F Configuration: **REDUCER TO NOZZLE** Wo Location **V- Stamp** Lo Location **TDC**

Scan Dir.	Results NI	NRI	RI	Ind. No.	% DAC	Length L1	Lmax	L2	Reference Measurement W1	Wmax	W2	Sweep Position S1	Smax	S2	Thickness 1"<--	C/L	-->1"	Notes:
2			●	1	17	*	41.65	*	*	.8	*		1.28		1.04	0.850	0.937	* - SPOT
5			●	2	10	42	42.05	42.1	*	.9	*		1.33		1.04	0.850	0.937	
7			●	3	25	*	40.75	*	*	0	*		1.68		1.04	0.850	0.937	
8			●	4	20	*	42.75	*	*	0	*		1.49		1.04	0.850	0.937	

Examination/Limitation Remarks: **LAMINATION SCAN PERFORMED IN BASE MATERIAL OF INTEREST PRIOR TO ANGLE BEAM EXAM; MAINTAINED AMPLITUDE OF 50 TO 80 PERCENT FSH.**

LOW LEVEL (LESS THAN 20%) ROOT SIGNALS SEEN INTERMITTENTLY.

Total Length of Weld	Crown Width	Total Length of Weld Examined	Extent of Perpendicular Scans (W)	Extent of Parallel Scans (L)
50.25	1.2"	5 (L) NL 2 (L) NL 7 & 8 (W) NL	5 - from NL to NL 2 - from NL to NL	From (5) NL to (2) NL

Primary Examiner	Level	Assistant Examiner	Level	Non-Technical Review	Date
PAUL DiVALERIO	II	SCOTT R. ERICKSON	II		5-12-00

SNC NDE Level II/III Review	Date	Percentage of Code Coverage	ANII Review	Date
	5-12-00	100 %		5/12/00

Figure 1

Revision 7

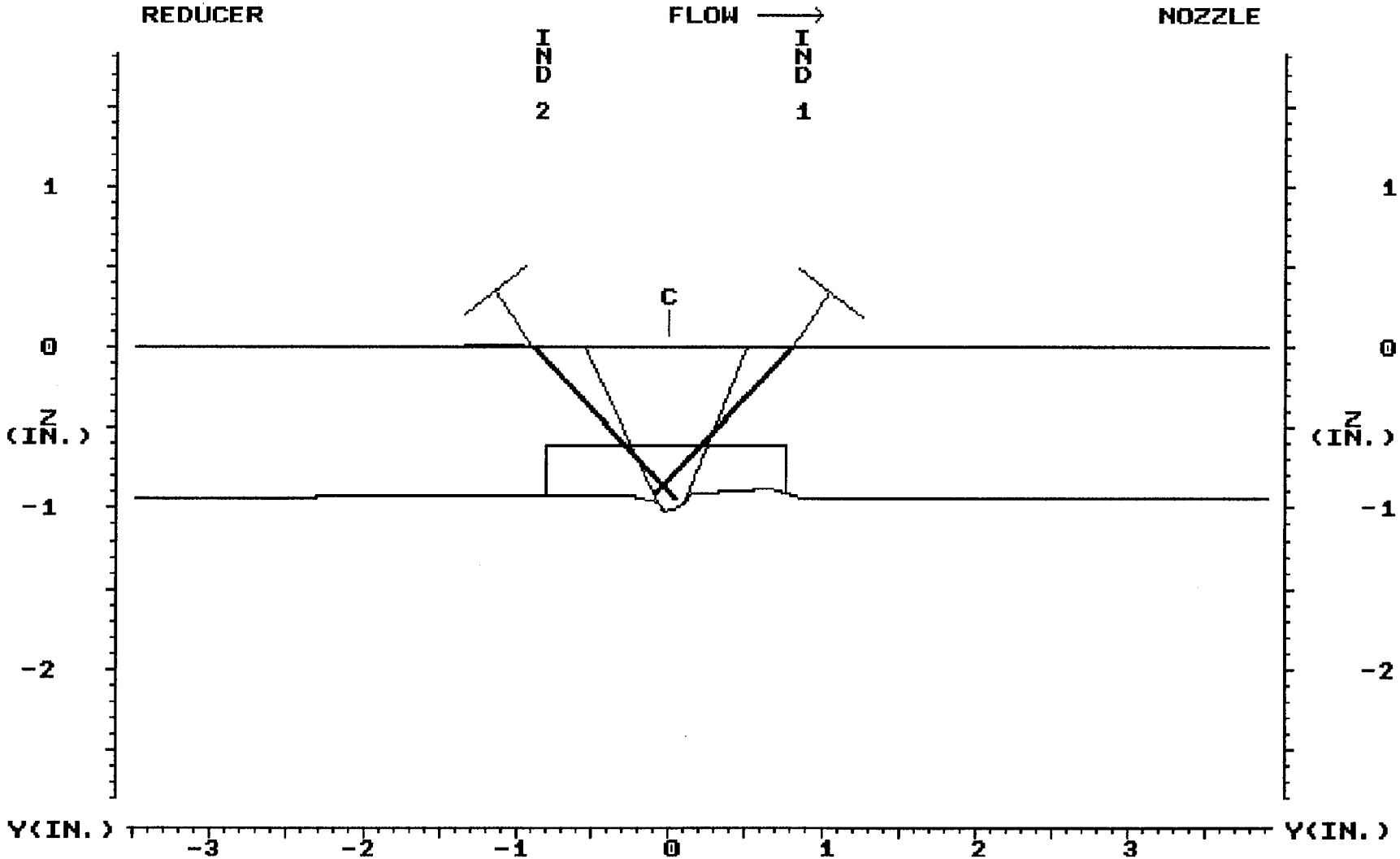

IND 1	SET	1R16024R.DAT						IND 2	SET
0.90	DEP	INDICATION 1,2,3,4 ALL ARE REFLECTED FROM ROOT						0.94	DEP
1.28	MP	GEOMETRY (ROOT CONVEXITY) THAT WAS CONFIRMED ON THE						1.33	MP
28.44	TOF	RT FILM. INDICATIONS 3 AND 4 ARE NOT SHOWN ABOVE AS						29.28	TOF
	ARC	THEY ARE FROM CIRCUMFERENTIAL SCANS. THESE ARE ALL							ARC
	GATE	LOW AMPLITUDE (FROM 10 TO 25% DAC) WITH THE TWO CIRC							GATE
0.010	STEP	REFLECTORS JUST ABOVE THE RECORDABLE CRITERIA. JEA						0.010	STEP
	EXIT	MAKERAY	UTILITY	LEFT	RIGHT	TOP	PRINT	EXIT	EXIT

PLANT: PLANT FARLEY UNIT 1 5/11/00 CIRC. POS.: 0 DEGREES
SYSTEM: FEEDWATER SG 'C' 14:49 ANALYST: J. ERIC AYCOCK L/III
COMPONENT: ALA2-4350-24R CAL. SHEET: S00F1U287

Ultrasonic Thickness and Contour Examination Record

Southern Nuclear Operating Company

Unit	Weld Number	Sheet No.	Date
1	ALA2-4350-24R	S00F1U284 1 of 2	5/11/00

,O/Drawing Number	Couplant/Batch Number	Instrument Manufacturer
ALA2-4350	ULTRAGEL II / 00125	PANAMETRICS

Material Type	Calibration Standard/ Serial No.	Model Number	Serial Number
☒ C/S ☐ S/S Other	CS STEP / 86-4257	EPOCH II	91060212

Examiner	SNT Level	Transducer Manufacturer	Type	Size
PAUL DiVALERIO Paul DiValerio	II	KBA	MSEB	3.5X10MM

Examiner	SNT Level	Serial Number	Frequency
SCOTT R. ERICKSON Scott R. Erickson	II	06605	4 MHz

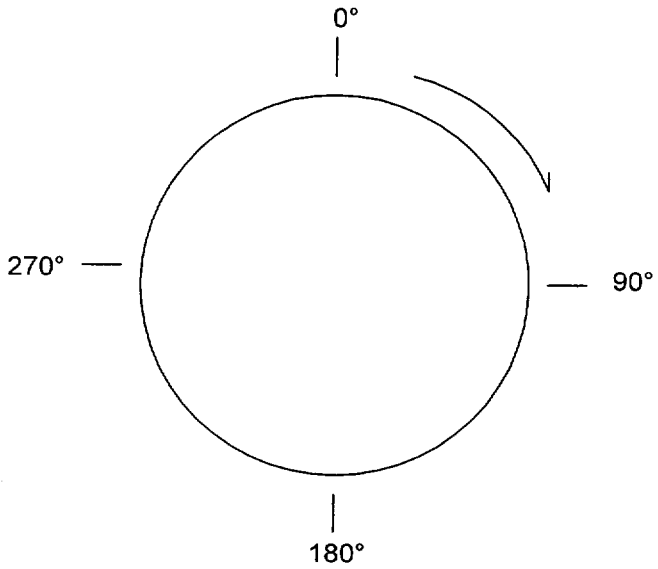

Location	0°	90 °	180°	270°
A	1.04	1.19	1.218	1.21
B	.922	.941	.850	.941
C	.850	.839	.803	.886
D	.889	.876	.876	.876
E	.937	.958	.966	.949

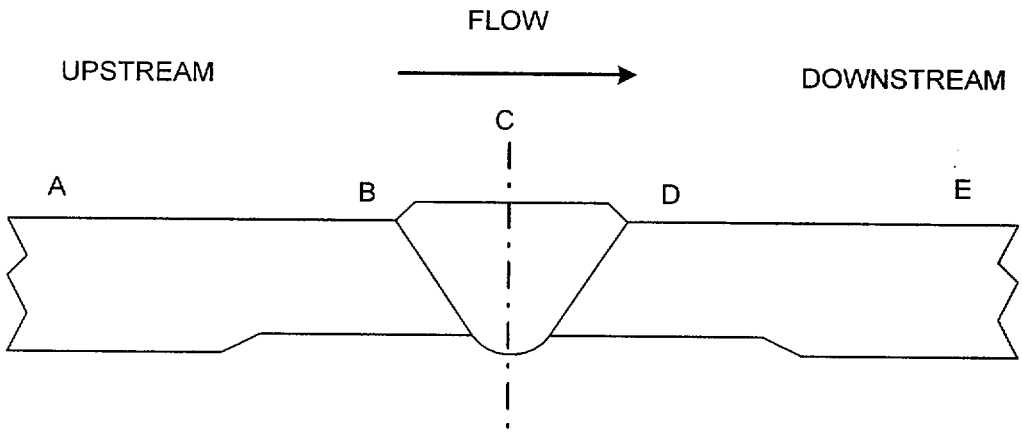

COUNTERBORE

Reducer — UPSTREAM

Nozzle — DOWNSTREAM

REMARKS: N/A

,E Level II/III Review	Level	Date	Non-Technical Review	Date
J. Eric Aycock	III	5-11-00	[illegible]	5-12-00

ALA2-4350-24R

Sheet No.
S00F1U28~~0~~4 2of2
4GN 5-11-00

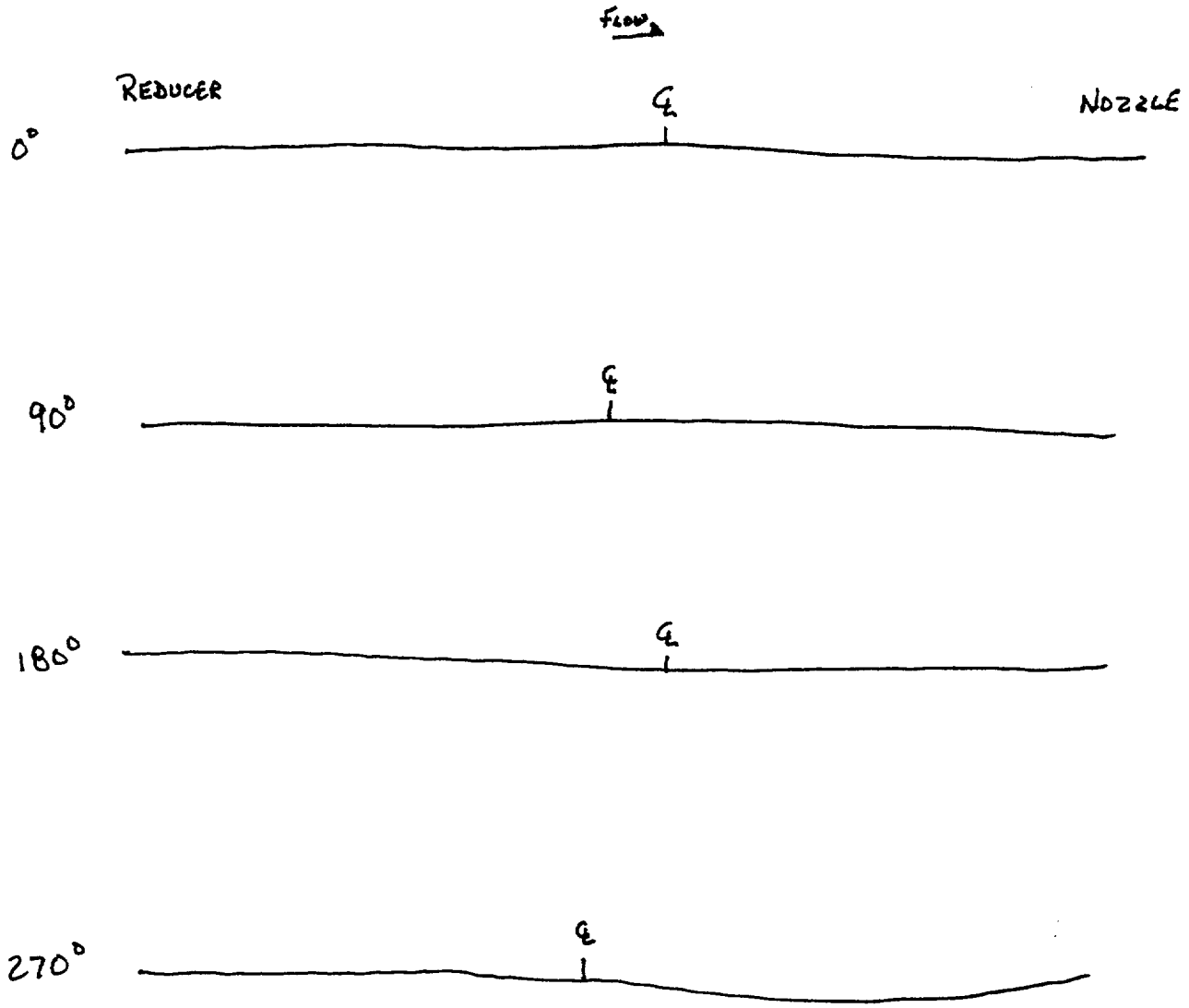

BECHTEL

WP&IR #	NONDESTRUCTIVE EXAMINATION REPORT MAGNETIC PARTICLE EXAMINATION		REPORT #
P-FWC-068			MT-00-137
JOB # 23734	JOB NAME Farley Unit 1 SGRP	SURFACE CONDITION ☒ GROUND ☐ AS WELDED	DATE 5/10/00
ISO / DWG # FSK-M-150	ITEM / COMP ID FW	TIME OF EXAM ☐ N/A ☐ PRE-PWHT ☒ POST-PWHT	COMPONENT TEMP AMBIENT
CODE / WELD CLASS ASME XI / CL 2	COMPONENT CONFIGURATION REDUCER To NOZZLE	MATL TYPE ☒ CARBON STEEL	PROCEDURE & REVISION MT-ASME III/XI R/2

EQUIPMENT ☒ YOKE ☒ AC DA-400
☒ CALIBRATION VERIFIED SN-10004
☐ 10 LBS Cal Due 8-17-00

EXAM MEDIUM ☒ DRY ☒ VISIBLE BATCH # 99H114
MANUFACTURER MAGNAFLUX DESIG / COLOR BA RED

INDICATION CODE: NI=NO INDICATIONS NRI=NO RECORDABLE INDICATIONS C=CRACK
ROUND=ROUNDED INDICATION LINEAR=LINEAR INDICATION

PART OR WELD #	ACC (√)	REJ (√)	IND CODE	REMARKS
FW 23-SG R1	✓		NI	NONE

SKETCH / COMMENTS LIFT PLATE # 1058

FNP ISI # ALA2-4350-24R

M&TE NO. N/A
CAL. DUE DATE: N/A

EXAMINER	LEVEL	DATE
Sam E. Griffin	II	5/10/00
REVIEW		**DATE**
[illegible]	III	5/11/00

J. Ervin Aycock L-III 5-11-00

ANI REVIEW: CG Ward 5/12/00

FIGURE C-1

NDE INDICATION EVALUATION REPORT
Farley Nuclear Plant

3 10 year Interval 1 40 Month Period 2 Outage Unit 1 / IER No. 017 Dat 5/12/00

PART I FINDINGS

Sketch Ref: ALA2-4250 NDE Method: UT Procedure/Rev. FNP-0-NDE-100.31 Rev. 7
Item No. 16R
Component Inspected: Reducer to Nozzle
Description of Indication

During ultrasonic inspection of weld ALA2-4250-16R (reducer to nozzle), 4 reflectors were recorded per procedure with a peak amplitude of 30% DAC.

Prepared By Gary A. Lofthus SNC L/III Date 05/12/2000

PART II SNC NDE INSPECTOR ASSESSMENT

Code References: 1989 ASME Section XI

Evaluation: ID Root Geometry

Bases:
Indications 1-4 were evaluated as geometry per ASME Article III-4512. Typical ultrasonic reflectors resulting from the root of the weld (reference the ultrasonic data report S00F1U278).
Indications 3 and 4 are ID geometry in a repaired area that plot to the same place in the center of the weld.

Review of Previous Examinations: Preservice Examination during SGRP 1R16 outage. No previous Data.

NDE Inspector Gary A. Lofthus Certification Level III Date 05/12/00

FIGURE C-1

PART III SNC EVALUATION AND DISPOSITION

Cause of Indication: **Indications are ID geometric reflectors.**

Action Required to Correct Indication: **None Required**

MSR Number: **N/A**

LER Yes _____ No **X** 10CFR 21 Yes _____ No **X**

Corrective Action Taken: None Required

Corrective Action Initiated to Prevent Recurrence: None Required

Prepared By [signature] Date 5-12-00

Approved By David Hartley Date 5/12/00

ANII REVIEW: CGWard 5/12/00

SHARED

FARLEY NUCLEAR PLANT
Ultrasonic Calibration and Examination Record

FNP-NDE-100.31
Southern Nuclear Operating Company

Unit	Sketch/Component No.	Date	Sheet No.	
1	ALA2-4250-16R	5/12/00	S00F1U278	Page 1 of 4

Procedure/Rev./TCN	Couplant/Batch No.	Thermometer SN/Cal Due Date	Linearity Sheet No.
FNP-NDE-100.31 / 7 / N/A	ULTRAGEL II / 00125	38193 / 8/27/2000	S00F1L019

Instrument		Search Unit		Calibration Block	
Instrument	PANAMETRICS	Transducer Mfg.	KBA	Cal. Blk. No.	ALA-51
Serial No.	91060212	Serial No.	41016	Thickness	.79
	Ax dB / Circ. dB	Size	.50	Cal. Temp.	70
Ref.	27.1 / 32.1	Frequency/Mode	2.25 / S	Cal. In	0119
Scan	33.1 / 38.1	"A" Dimension	.35	Cal. Chk.	0205
Reject	0	Nominal Angle	45	Cal. Out	0403
Frequency	2.25	Measured Angle	45	Ref. Blk. No.	86-4333
Mode	PE	Cable Type	RG-174	Reflector	SDH@35db
Damping	HIGH/400	Cable Length	6'	Amplitude/Sweep	36%/2.8 DIV

Axial Scan Calibration				Circ. Scan Calibration			
Cal. Refl.	Signal Amp.	Sweep Div.	Wmax	Cal. Refl.	Signal Amp.	Sweep Div.	Wmax
1T	80	3.0	.7	1T	80	4.0	.8
2T	65	6.0	1.45	2T	50	8.0	1.6
3T	40	9.0	2.2				

Calibration Remarks:
MSEB 4mHz 06605 was used to perform the lamination scan. Aga 5-12-00

Comp. Temp.: 92 °F Configuration: REDUCER TO NOZZLE Wo Location V-STAMP Lo Location TDC

Scan Dir.	Results NI	NRI	RI	Ind. No.	% DAC	Length L1	Lmax	L2	Reference Measurement W1	Wmax	W2	Sweep Position S1	Smax	S2	Thickness 1"<--	C/L	-->1"	Notes:
5		●		N/A														
2			●	1	25	17.65"	18.25"	18.75"	-	.78"	-	-	1.22"	-	.82"	.868"	.82"	LOW AMP. SIGNAL ON 5 SIDE
2			●	2	30	23.65"	23.75	23.85"	-	.85"	-	-	1.26"	-	-	-	-	
7			●	3	20	.4"	.5"	.625"	*	0	*	1.12"	1.09"	1.06"	-	.750"	-	.1" LENGTH

Examination/Limitation Remarks: LAM SCAN PERFORMED IN BASE MATERIAL OF INTEREST PRIOR TO ANGLE BEAM EXAMINATION. LAM SCAN AMPLITUDE MAINTAIN 50 TO 80 PERCENT OF FULL SCREEN HEIGHT.

Total Length of Weld	Crown Width	Total Length of Weld Examined	Extent of Perpendicular Scans (W)	Extent of Parallel Scans (L)
51"	1.2"	5 (L) 51 2 (L) 51 7 & 8 (W) 51	5 - from NL to NL 2 - from NL to NL	From (5) NL to (2) NL

Primary Examiner	Level	Assistant Examiner	Level	Non-Technical Review	Date
GARY A. LOFTHUS	III	J. ERIC AYCOCK	III	J. Eric Aycock	5-12-00
SNC NDE Level II/III Review		Date	Percentage of Code Coverage	ANII Review	Date
Gary A. Lofthus	III	5-12-00	100 %	C G Ward	5/12/00

Figure 1

Revision 7

FARLEY NUCLEAR PLANT
Ultrasonic Examination Continuation Record

FNP-NDE-100.31
Southern Nuclear Operating Company

Unit	Sketch/Component No.	Date	Sheet No.
1	ALA2-4250-16R	5/12/00	S00F1U278

Page 2 of 4

Procedure/Rev./TCN: FNP-NDE-100.31 / 7 / N/A

Appendix III Exams. D1 = NA D2 = NA Measured Angle = 45 °

Configuration: REDUCER TO NOZZLE

Scan Dir.	Crown Width	Results NI	Results NRI	Results RI	Ref No	% DAC	Length L1	Length Lmax	Length L2	Reference Measurement W1	Reference Measurement Wmax	Reference Measurement W2	Sweep Position S1	Sweep Position Smax	Sweep Position S2	Thickness 1"<--	Thickness C/L	Thickness -->1"	Notes:
8			●	4	20	2.5"	2.375"	2.25"	*	0	*	1.18"	1.12"	1.06"	-	.750"	-	.1" LENGTH

Examination/Limitation Remarks: **LAM SCAN PERFORMED IN BASE MATERIAL OF INTEREST PRIOR TO ANGLE BEAM EXAMINATION. LAM SCAN AMPLITUDE MAINTAIN 50 TO 80 PERCENT OF FULL SCREEN HEIGHT.**

Total Length of Weld	Crown Width	Total Length of Weld Examined	Extent of Perpendicular Scans (W)	Extent of Parallel Scans (L)
51"	1.2"	5 (L) 51 2 (L) 51 7 & 8 (W) 51	5 - from NL to NL 2 - from NL to NL	From (5) NL to (2) NL

Primary Examiner	Level	Assistant Examiner	Level	Non-Technical Review	Date
GARY A. LOFTHUS	III	J. ERIC AYCOCK	III		5-12-00

SNC NDE Level II/III Review		Date	Percentage of Code Coverage	ANII Review	Date
	III	5-12-00	100 %		5/12/00

Figure 1

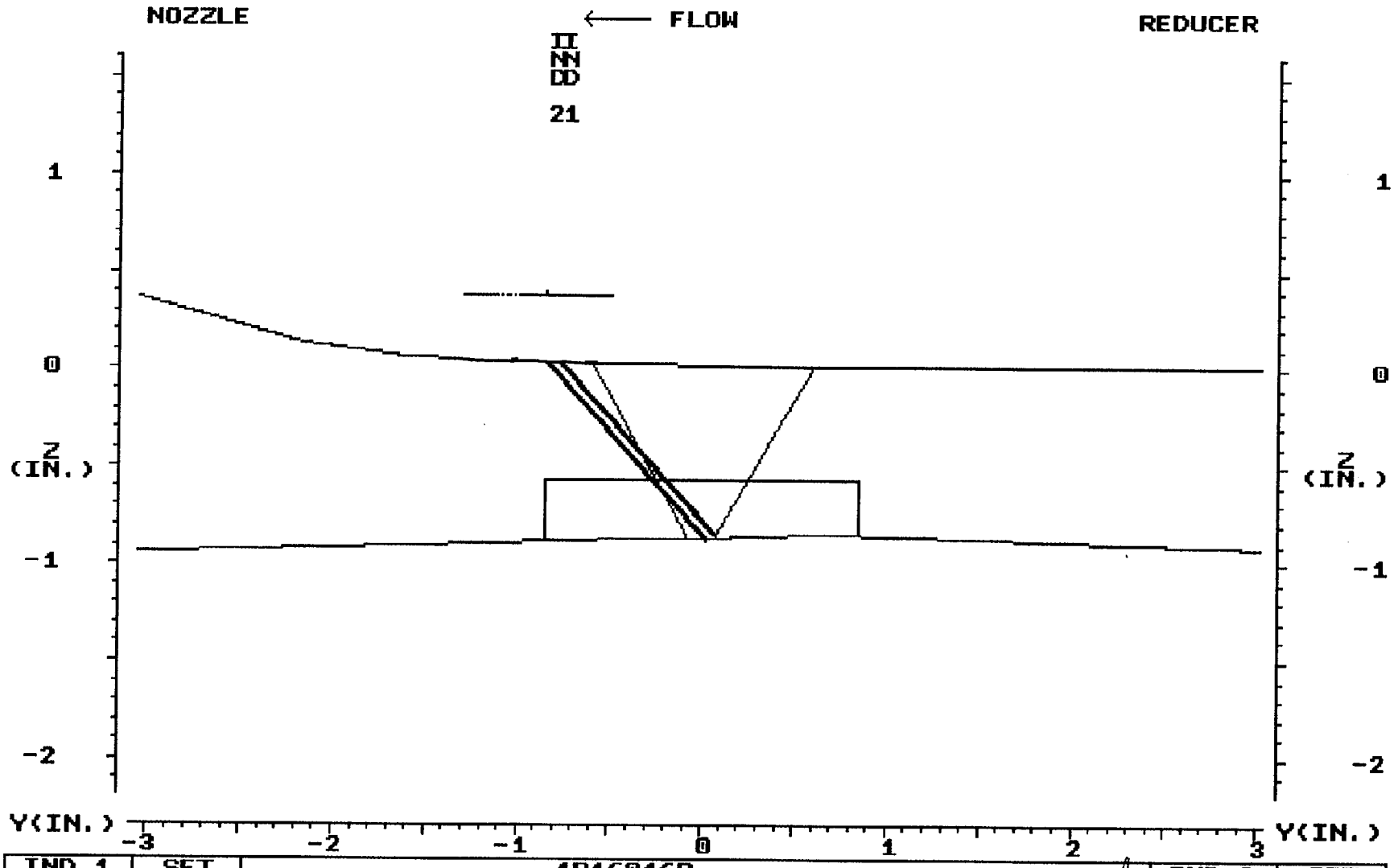

IND 1	SET	1R16016R						IND 2	SET
0.86	DEP							0.00	DEP
1.22	MP							0.00	MP
27.51	TOF	INDICATION 1 AND 2 ARE ROOT GEOMETRY.						8.00	TOF
	ARC	INDICATION 3 AND 4 ARE ID GEOMETRY IN REPAIRED AREA							FAN
	GATE	AND PLOT TO THE SAME PLACE IN THE CENTER OF THE WELD							GATE
0.010	STEP	SEE SHEET 3 FOR INDICATIONS 3 AND 4 (CIRC)						1.000	STEP
	EXIT	MAKERAY	UTILITY	LEFT	RIGHT	TOP	PRINT	EXIT	EXIT

PLANT: PLANT FARLEY UNIT 1 — 5/12/00 — CIRC. POS.: 0 DEGREE
SYSTEM: FEEDWATER 'B' — 3:05 — ANALYST: J. ERIC AYCOCK L/III
COMPONENT: ALA2-4250-16R — CAL. SHEET: S00F1U278

Page 3 of 4

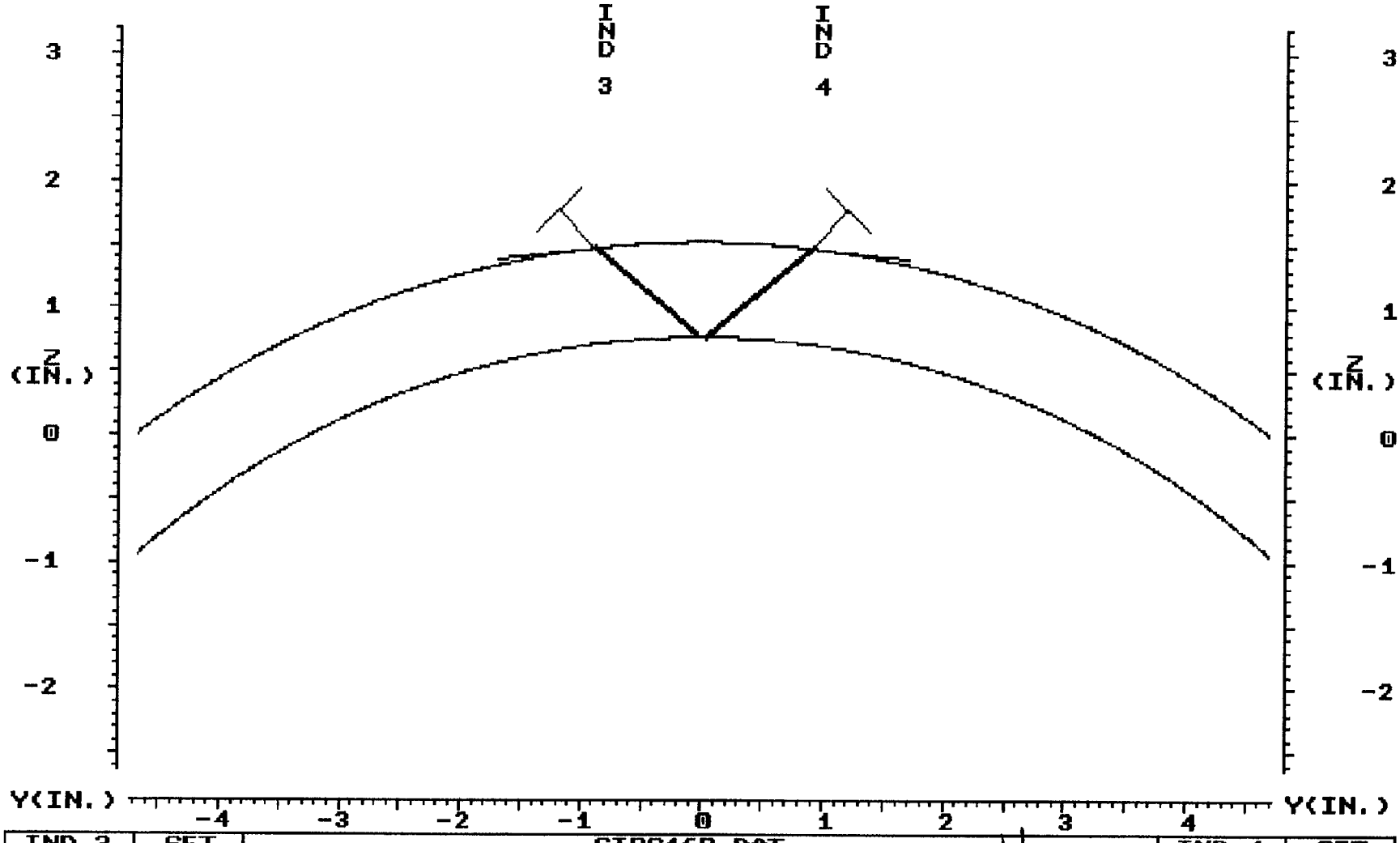

IND 3	SET	CIRC16R.DAT	IND 4	SET
0.77	DEP		0.79	DEP
1.09	MP	INDICATION 3 AND 4 ARE ID GEOMETRY IN REPAIRED AREA	1.12	MP
25.49	TOF	AND PLOT TO THE SAME PLACE IN THE CENTER OF THE WELD	25.91	TOF
	ARC			ARC
	GATE			GATE
0.010	STEP		0.010	STEP
	EXIT	MAKERAY UTILITY LEFT RIGHT TOP PRINT EXIT		EXIT

Dal 5-12-00

JEA

PLANT: FARLEY UNIT 1 5/12/00 CIRC. POS.: 1.4"
SYSTEM: FEEDWATER 'B' ANALYST: J.ERIC AYCOCK L/III
COMPONENT: ALA2-4250-16R CAL. SHEET: S00F1U278 PAGE 4OF4

Ultrasonic Thickness and Contour Examination Record — **Southern Nuclear Operating Company**

Unit	Weld Number	Sheet No.	Date
1	ALA2-4250-16R	1 of 2 S00F1U282	5/12/00

O/Drawing Number	Couplant/Batch Number	Instrument Manufacturer
ALA2-4250	ULTRAGEL II / 00125	PANAMETRICS

Material Type	Calibration Standard/ Serial No.	Model Number	Serial Number
☒ C/S ☐ S/S Other	CS STEP / 86-4263	EPOCH II	91060212

Examiner		SNT Level	Transducer Manufacturer	Type	Size
GARY A. LOFTHUS	Gal	III	KBA	MSEB	3.5X10MM

Examiner		SNT Level	Serial Number	Frequency
J. ERIC AYCOCK	J. Eric Aycock	III	06605	4 MHz

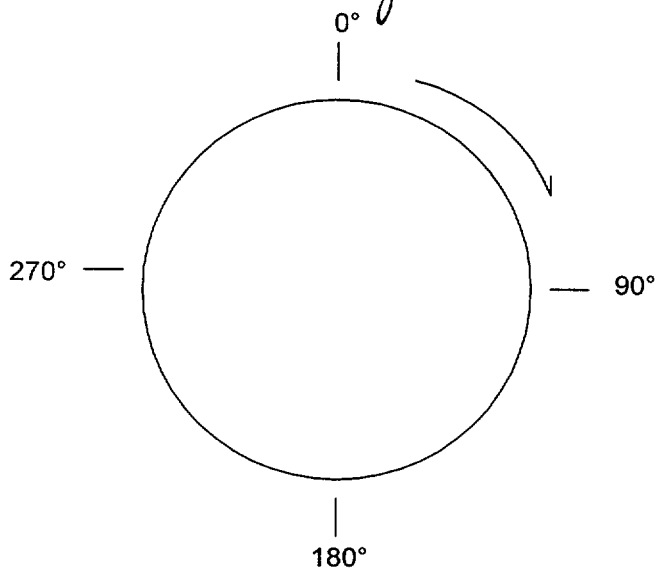

Location	0°	90 °	180°	270°
A	.928	.918	.909	.879
B	.850	.860	.839	.829
C	.808	.888	.860	.839
D	.860	.888	.900	.860
E	.900	.900	.888	.888

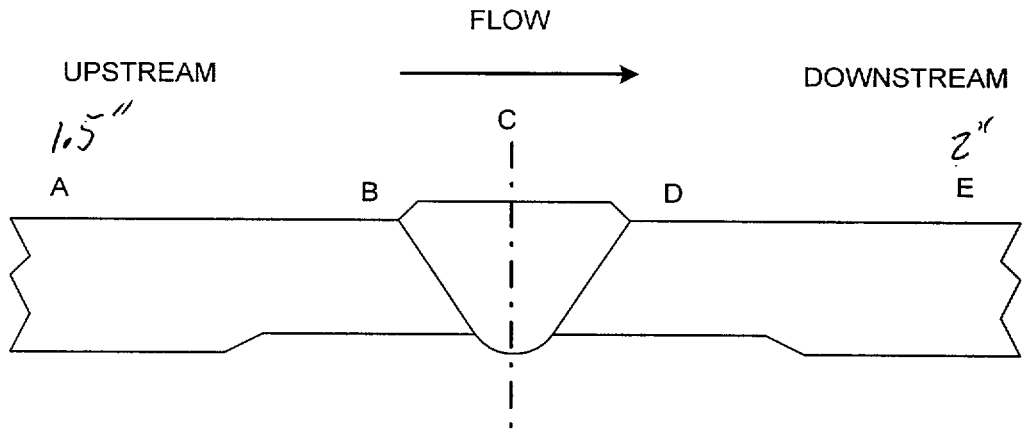

COUNTERBORE

Reducer	Nozzle
UPSTREAM	DOWNSTREAM

REMARKS: Center of weld at 1" is ground flush and reading .750".

E Level II/III Review	Level	Date	Non-Technical Review	Date
Gary A. Lofthus	III	5-12-00	J. Eric Aycock	5-12-00

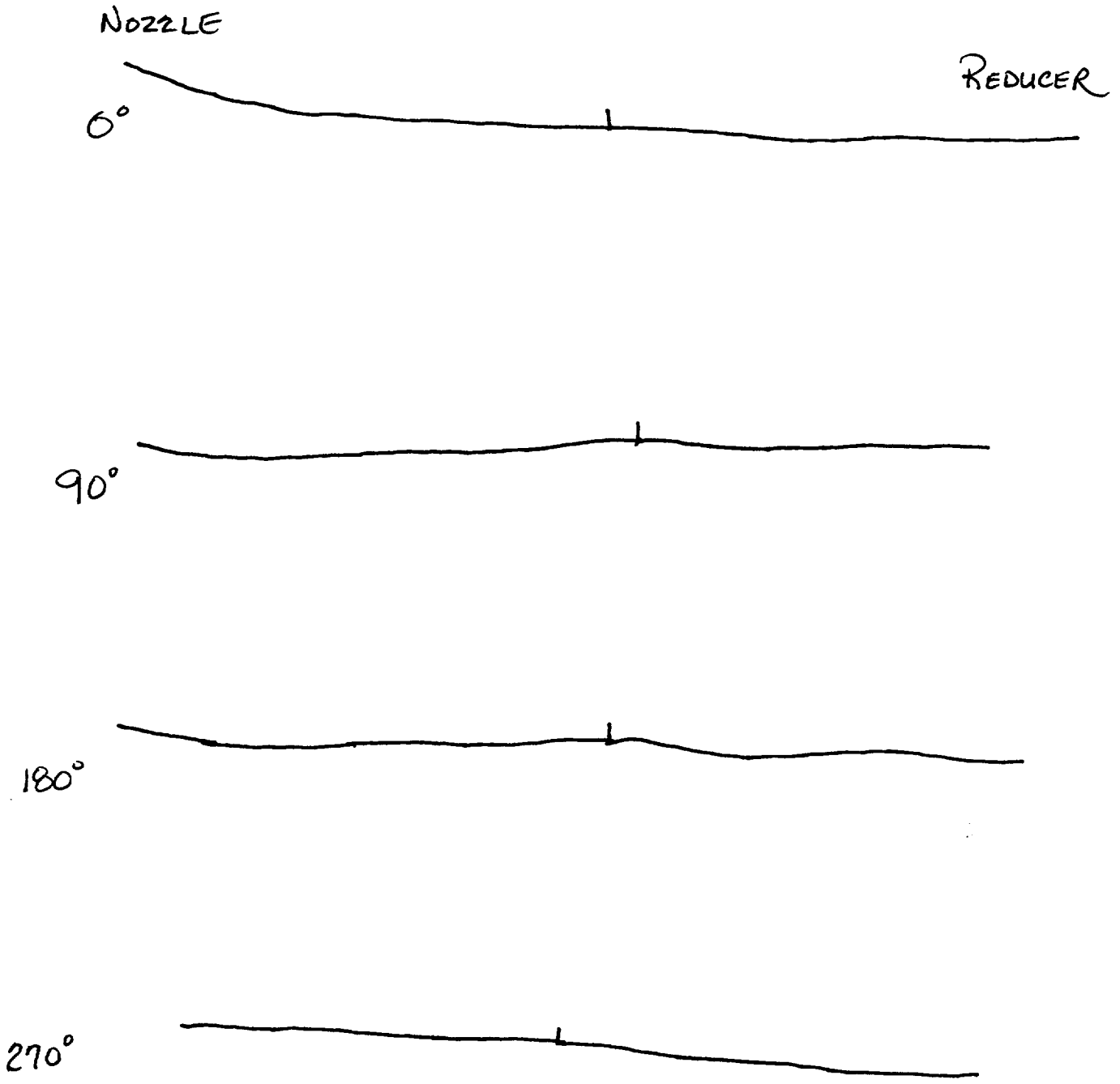
NOZZLE
REDUCER
0°
90°
180°
270°

BECHTEL

WPIR #	NONDESTRUCTIVE EXAMINATION REPORT MAGNETIC PARTICLE EXAMINATION	REPORT #
P-FWB-067		MT-00-149

JOB #	JOB NAME	SURFACE CONDITION	DATE
23734	FARLEY UNIT 1 SGR	☒ GROUND ☐ AS WELDED	5/11/00

ISO / DWG #	ITEM / COMP ID	TIME OF EXAM	COMPONENT TEMP
FSK-M-148	FW	☐ N/A ☐ PRE-PWHT ☒ POST-PWHT	AMBIENT

CODE / WELD CLASS	COMPONENT CONFIGURATION	MATL TYPE	PROCEDURE & REVISION
ASME XI / CL 2	REDUCER TO NOZZLE	☒ CARBON STEEL	MT-ASME III / XI REV. 2

EQUIPMENT ☒ YOKE ☒ AC DA-400
☒ CALIBRATION VERIFIED SN-10004
☐ 10 LBS Cal. Due 8-17-00

EXAM MEDIUM ☒ DRY ☒ VISIBLE
MFR MAGNAFLUX DESIG/COLOR 8A-RED BATCH 99H114

INDICATION CODE: NI=NO INDICATIONS NRI=NO RECORDABLE INDICATIONS C=CRACK
ROUND=ROUNDED INDICATION LINEAR=LINEAR INDICATION

PART OR WELD #	ACC (√)	REJ (√)	IND CODE	REMARKS
FW 14-SG-R1	✓		NI	NONE

SKETCH / COMMENTS Lift Plate #1058

FNP ISI # ALA2-4250-16R

M&TE NO. N/A

CAL. DUE DATE: N/A

EXAMINER	LEVEL	DATE
Sam E. Dryden	II	5/11/00
REVIEW		**DATE**
[illegible]	III	5/11/00

J. Eric Aycock SNC Level III 5-12-00 ANII Review: [illegible] 5/12/00

FIGURE C-1

NDE INDICATION EVALUATION REPORT
Farley Nuclear Plant

3 10 year Interval 1 40 Month Period 2 Outage Unit 1 / IER No. **4304-7** Date **3/14/00**

PART I FINDINGS

Sketch Ref: **ALA1-4304** NDE Method: **VT** Procedure/Rev. **FNP-0-NDE-100.21 Rev. 1**
Item No. **7**
Component Inspected: **Valve to pipe weld on 6" Safety Injection System**
Description of Indication
During the PT examination of weld 7, 3 gouges were reported on the base metal. A VT-1 was Performed to document the length and depth. Eight gouges were reported with lengths from ¼" to 3 7/8" with depths from 1/64" to 1/16". Base material thickness was .68" See attached Sheets for location, length and depth measurements.

Prepared By **Gary Lofthus SNC L/III** Date **03/17/00**

PART II SNC NDE INSPECTOR ASSESSMENT

Code References: **1989 ASME Section XI**

Evaluation: Remove as much of indications without violating minimum "T" requirements

Bases: Although the indications individually would be acceptable to section XI ut evaluation standards / table IWB-3514-2, we need to write MWO to remove indications as much as possible without violating minimum wall requirements

Letters attached.

Review of Previous Examinations: None previously recorded.

NDE Inspector [signature] Certification Level III Date 4-26-00

FIGURE C-1

PART III SNC EVALUATION AND DISPOSITION

Cause of Indication: **Unknown, scratches were identified during 1R16 outage, when performing NDE examinations looking for thermal stratification cracking.**

Action Required to Correct Indication: Write MWO to polish the surface and remove scratches as much as possible. Maintain minimum wall thickness of at least .628"
Per letter from An N. Nguyen 3-29-2000, Service condition for the pipe is 2235 psi @ 550°F. Design condition is 2485 psi @ 650°F. Allowable stress at 650°F is 16.1 Ksi, so minimum wall thickness required 0.481 inch plus corrosion allowance. Tolerance on the pipe is 12.5% of nominal wall. The minimum wall thickness is 0.628"

MSR Number: 2000 2516

LER Yes ____ No X 10CFR 21 Yes ____ No X

Corrective Action Taken: 20002516 written to remove scratches. Seven scratches removed by polishing. Portion of 1 scratch remaining has a length of 1.6", with 1/64" depth, with a base material thickness of .655". This indication is acceptable per table IWB 3514.2 (allowable 11.23%, actual 4.89%)
An N. Nguyen, letter 4-10-00, agrees that the indication is acceptable and recommend to leave scratch as is. Data Sheets and letter attached.

Corrective Action Initiated to Prevent Recurrence: None

Prepared By [signature] Date 4-26-00

Approved By [signature] Date 4/27/00

ANII Review: CG Ward 5/6/00

SHARED

FARLEY NUCLEAR PLANT
Ultrasonic Calibration and Examination Record

FNP-0-NDE-100.31
Southern Nuclear Operating Company

Unit	Sketch/Component No.	Date	Sheet No.	Page
1	ALA1-4304-7	3/12/00	S00F1U029	1 of 1

Procedure/Rev./TCN	Couplant/Batch No.	Thermometer SN/Cal Due Date	Linearity Sheet No.
FNP-0-NDE-100.31 / 7 / N/A	SONATRACE 40 / 94243	38081 / 8/27/2000	S00F1L003

4600 46.00

Instrument		Search Unit		Calibration Block	
Instrument	STAVELEY	Transducer Mfg.	KBA	Cal. Blk. No.	ALA-6
Serial No.	136-898K	Serial No.	031279	Thickness	.719"
	Ax. dB / Circ. dB	Size	.375	Cal. Temp.	72
Ref.	29.0 / 40.2	Frequency/Mode	2.25 / S	Cal. In	0900
Scan	41.0 / 52.0	"A" Dimension	.3	Cal. Chk.	1040
Reject	OFF	Nominal Angle	45	Cal. Out	1340
Frequency	2.25	Measured Angle	45	Ref. Blk. No.	4976
Mode	P/E	Cable Type	RG174	Reflector	HOLE
Damping	500 OHMS	Cable Length	15'	Amplitude/Sweep	18% / 2.0

Axial Scan Calibration				Circ. Scan Calibration			
Cal. Refl.	Signal Amp.	Sweep Div.	Wmax	Cal. Refl.	Signal Amp.	Sweep Div.	Wmax
1T	80	2.0	.73	1T	80	2.2	.89
2T	50	4.0	1.4	2T	60	4.4	1.9
3T	25	6.0	2.1				
4T	18	8.0	2.83				

Calibration Remarks:
N/A

Comp. Temp.: 70 °F Configuration: VALVE TO PIPE

Wo Location C/L Lo Location TDC

Scan Dir.	Results NI	NRI	RI	Ind. No.	% DAC	Length L1	Lmax	L2	Reference Measurement W1	Wmax	W2	Sweep Position S1	Smax	S2	Thickness 1"<--	C/L	-->1"	Notes:
2	●			N/A														
7	●			N/A														
8	●			N/A														

Examination/Limitation Remarks:

VALVE RESTRICTS 5 SCAN. EXTENDED VOLUME PER 97-19-1. LAMINATION SCAN PERFORMED WITH TRANSDUCER D15618 80% FSH WITH 24.2db
REFERENCE IER 4304-7 FOR SURFACE GOUGE RESOLUTION. JRC

Total Length of Weld	Crown Width	Total Length of Weld Examined	Extent of Perpendicular Scans (W)	Extent of Parallel Scans (L)
21"	.7"	5 (L) N/A 2 (L) NL 7 & 8 (W) NL	5 - from N/A to N/A 2 - from .65 to NL	From (5) +.35 to (2) NL

Primary Examiner	Level	Assistant Examiner	Level	Non-Technical Review	Date
JOSEPH D. FUNYAK JC Funyak	II	N/A	N/A	Lynda Duke	3-13-00

SNC NDE Level II/III Review	Date	Percentage of Code Coverage	ANII Review	Date
Gary Cordes L III	3-14-00	N/A %	[illegible]	5/6/00

Figure 1

SHARED

FARLEY NUCLEAR PLANT
Ultrasonic Calibration and Examination Record

FNP-0-NDE-100.31
Southern Nuclear Operating Company

Unit	Sketch/Component No.	Date	Sheet No.	
1	ALA1-4304-7	3/12/00	S00F1U030	Page 1 of 1

Procedure/Rev./TCN	Couplant/Batch No.	Thermometer SN/Cal Due Date	Linearity Sheet No.
FNP-0-NDE-100.31 / 7 / N/A	SONATRACE 40 / 94243	38081 / 8/27/2000	S00F1L003

Instrument		Search Unit		Calibration Block	
Instrument	STAVELEY	Transducer Mfg.	KBA	Cal. Blk. No.	ALA-6
Serial No.	136-898K	Serial No.	031273	Thickness	.719"
	Ax. dB / Circ. dB	Size	.375	Cal. Temp.	72
Ref.	46.4 / N/A	Frequency/Mode	2.25 / S	Cal. In	0905
Scan	58.4 / N/A	"A" Dimension	.5	Cal. Chk.	1050
Reject	OFF	Nominal Angle	60	Cal. Out	1345
Frequency	2.25	Measured Angle	53	Ref. Blk. No.	4976
Mode	P/E	Cable Type	RG174	Reflector	HOLE
Damping	500 OHMS	Cable Length	15'	Amplitude/Sweep	65% / 4.4

Axial Scan Calibration				Circ. Scan Calibration			
Cal. Refl.	Signal Amp.	Sweep Div.	Wmax	Cal. Refl.	Signal Amp.	Sweep Div.	Wmax
1T	80	4.0	.95	N/A	N/A	N/A	N/A
2T	30	8.0	1.93	N/A	N/A	N/A	N/A

Calibration Remarks:
N/A

Comp. Temp.: 70 °F Configuration: VALVE TO PIPE

Wo Location C/L Lo Location TDC

Scan Dir.	Results NI	NRI	RI	Ind. No.	% DAC	Length L1	Lmax	L2	Reference Measurement W1	Wmax	W2	Sweep Position S1	Smax	S2	Thickness 1"<--	C/L	-->1"	Notes:
2	●			N/A														

Examination/Limitation Remarks:

VALVE RESTRICTS 5 SCAN. EXTENDED VOLUME PER 97-19-1.
REFERENCE IER 4304-7 FOR SURFACE GOUGE RESOLUTION. DRC

Total Length of Weld	Crown Width	Total Length of Weld Examined	Extent of Perpendicular Scans (W)	Extent of Parallel Scans (L)
21"	.7"	5 (L) N/A 2 (L) NL 7 & 8 (W) N/A	5 - from N/A to N/A 2 - from .85 to NL	From (5) N/A to (2) N/A

Primary Examiner	Level	Assistant Examiner	Level	Non-Technical Review	Date
JOSEPH D. FUNYAK J D Funyak	II	N/A	N/A	Lynda Duke	3-13-00

SNC NDE Level II/III Review	Date	Percentage of Code Coverage	ANII Review	Date
Nancy Cardo L III	3-14-00	N/A %	C Gwinnell	5/6/00

Figure 1

Revision 7

SHARED

Ultrasonic Weld Profile Record — **FNP-0-NDE-100.35**

Southern Nuclear Operating Company

Unit: 1	Weld Number: ALA1-4304-7	Sheet Number: S00F1U031	Date: 3/12/00
ISO/Drawing Number: ALA1-4304	Couplant/Batch Number: SONATRACE 40 / 94243	Instrument Manufacturer: STAVELEY	
Material Type: SS	Calibration Standard/Serial Number: SS STEP / 800887	Model Number: SONIC 136	Serial Number: 136-898K
Examiner: JOSEPH D. FUNYAK	SNT Level: II	Search Unit Manufacturer: KBA	Size: .375
Examiner: N/A	SNT Level: N/A	Serial Number: D15618	Frequency: 2.25 MHz
Weld Examination Record No.: N/A	Indication No.: N/A	Component Configuration/Flow: VALVE TO PIPE	
Location: LMAX TDC WMAX C/L		Component Temp °F: 70	Thermometer S/N: PTC 38081

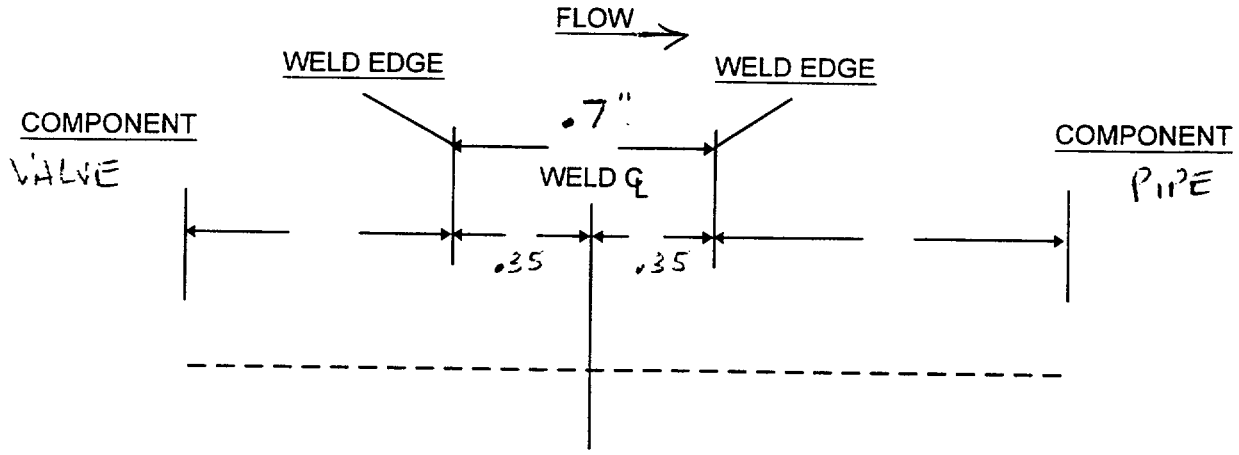

T. MEASUREMENTS

O.D. PROFILE

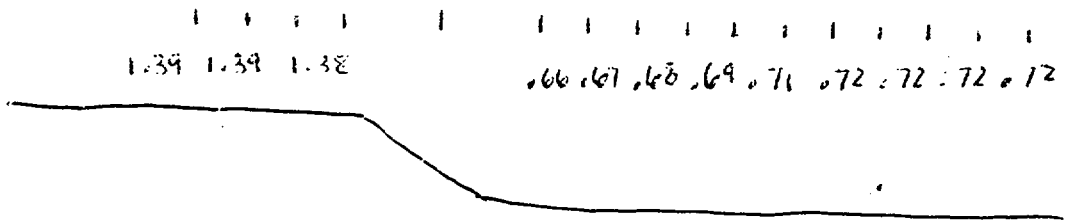

T. MEASUREMENT EACH .25 IN.

REMARKS:

NDE LII/III Review	Level	Date	Non-Technical Review	Date
Gary Cordes	III	3-14-00	Lynda Duke	3-13-00

Revision 1

SHARED

FNP-0-NDE-100.5
PT-F-Form 001
Southern Nuclear Operating Company

Farley Nuclear Plant
Liquid Penetrant Examination Record

Unit	Component Number	Procedure/Rev./TCN	Sheet No.
1	ALA1-4304-7	FNP-0-NDE-100.5 / 6 / N/A	S00F1P003 Page 1 of 2

Thermometer

Mfg. / Ser. No.	PTC / 38081
Cal. Due Date	8/27/2000
Surface Temp.	75 °F

Penetrant Materials

Manufacturer	MAGNAFLUX	Type	Batch
Cleaner/Remover		SKC-S	96J05K
Penetrant		SKL-SP	93D12K
Developer		SKD-S2	93J02P

Component Configuration	% of Length Coverage	% of Area Coverage	Date
VALVE TO PIPE	100	100	3/12/00

Ind. No.	Results	Indication Desc. / Exam Limitations / etc.	Remarks
N/A	NRI		

See Sheet 2 of 2 for photo GEW 3/14/00

DAL 3-14-00
REFERENCE IER 4304-7 FOR GOUGE RESOLUTION.

Remarks: 3 GOUGES (1) 4"CCW TO 2CW" (1/8 TO 9/16 FROM TOE) (2)4 1/2" CW TO 5" CW (3/8 FROM TOE) (3)7"CW TO 8"CW (1/4 TO 1/2 FROM TOE)

Primary Examiner	ASNT Level	Initials	Assistant Examiner	ASNT Level	Initials	Non-Technical Review	Date
JOHN W. BELL	II	JWB	N/A	N/A		Lynda Duke	3-17-00

SNC NDE Level II/III Review	Date	Percentage of Code Coverage	ANII Review	Date
Danny Condra L/III	3-14-00	100 %	[illegible]	5/6/00

Figure 1

Revision 6

S00FIP003 2 of 2

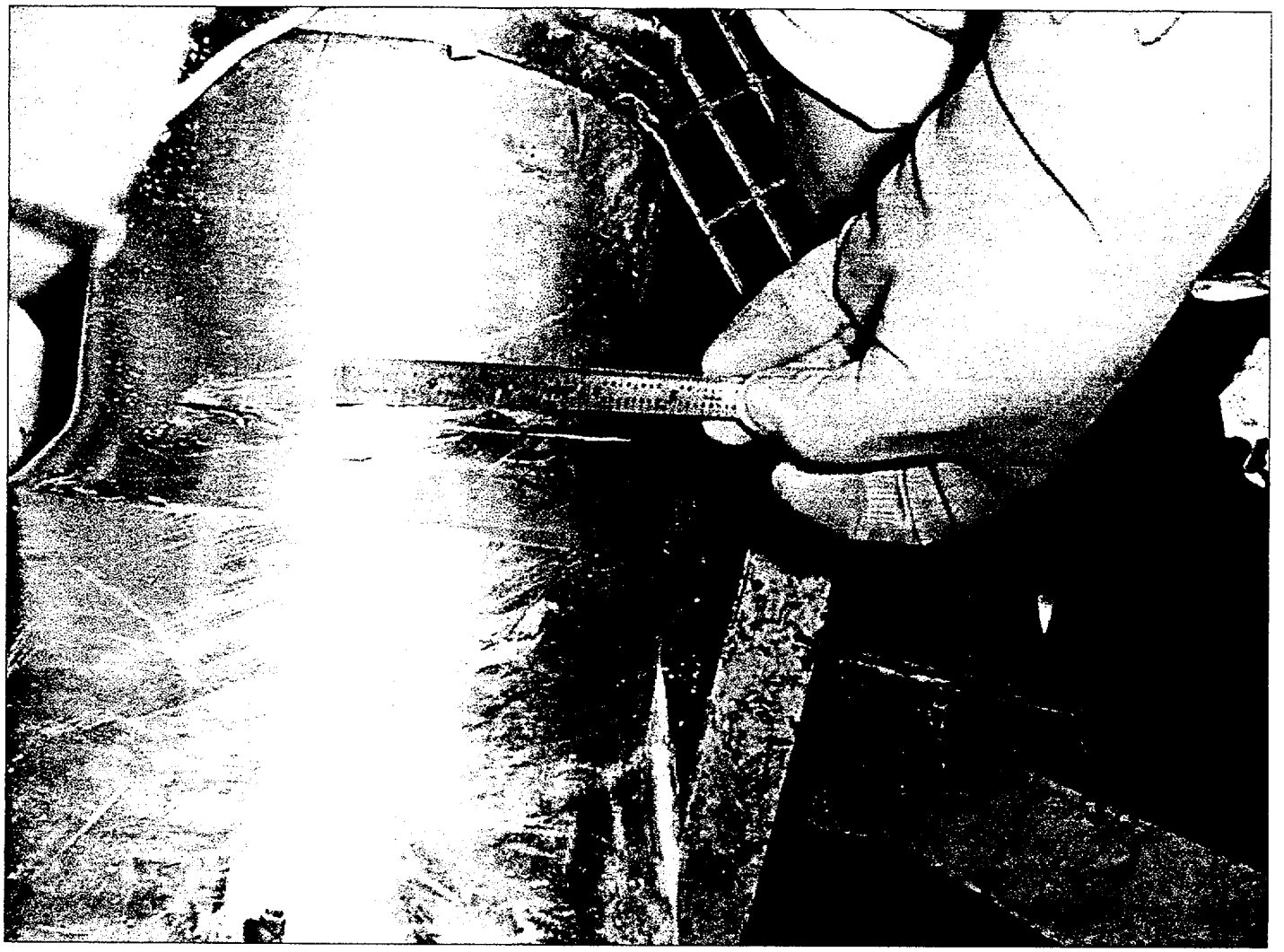

Name: 14304-7b.jpg
Dimensions: 1024 x 768 pixels

ALA 1-4304-7

SHARED

FIGURE 1

VISUAL EXAMINATION RECORED VT-1

FARLEY NUCLEAR PLANT

SOUTHERN NUCLEAR OPERATING COMPANY

Plant/Unit	Line Number/Examination Area/Weld No.	Drawing Number	Sheet No.
FARLEY /	ALA1-4304-7	ALA1-4304	

Photos	Sketch	Resolution	Technique	
___ Yes ___ B&W	✓ Yes	✓ 1/32" Division (Scale)	✓ Direct	WO/WA
✓ No ___ Color	___ No	___ 1/32" Line (Gray Card)	___ Video	Procedure No. FNP-0-NDE-100.21
			___ Remote	Revision No. /
				Examiner/Initial Sig. [signature] Level II
				Examiner/Initial Sig. Level
				Date (Month-Day-Year) 03-15-00

Equipment	Lighting	Tools		
___ Mirror	___ Ambient	✓ Scale	✓ Depth Gauge	___ Level
___ Magnifier	✓ Flashlight	___ Micrometer	___ Comparator	___
___ CCTV	___ Droplight	___ Caliper	___ Weld Gauge	___

✓ WELDS & BASE MATERIAL VT-1	SAT	UN-SAT	N/A
Ground Blend Material	___	___	___
Undercut	___	___	✓
Corrosion build-Up	___	___	✓
Gouges	___	✓	___
Evidence of Leakage	___	___	✓
Arc Strikes	___	___	✓
Cracks	___	___	✓
Other **	___	___	

* Provide details on unsat areas by use of supplemental data sheet.

** Provide details on other areas examined

___ BOLTS, STUDS, AND WASHERS VT-1	SAT	UN-SAT	N/A
Loose Members	___	___	___
Cracks	___	___	___
Corrosion	___	___	___
Gouges	___	___	___
Thread Damage	___	___	___
Deformation	___	___	___
Protective Coating	___	___	___
Evidence of Leakage	___	___	___
Other**	___	___	___

Comments SEE ATTACHED

[signature] LV. III 5-5-00

ANII REVIEW: CGN 5/6/00

Page 1 of 2

FIGURE 2

VISUAL EXAMINATION SUPPLEMENTAL DATA SHEET

FARLEY NUCLEAR PLANT

SOUTHERN NUCLEAR OPERATING COMPANY

Plant/Unit	Line Number/Examination Area/Weld No.	Drawing Number	Sheet No.
FARLEY 1	ALA1-4304 - 7	ALA 1-4304	

WO/WA No.	Date (Month-Day-Year)	Examiner	Level	Location
Procedure No. FNP-0-NDE-100.21	03-15-00	Paul Nicholson	II	OFF COLD LEG RCP "C" PLATFORM
Revision No. 1				

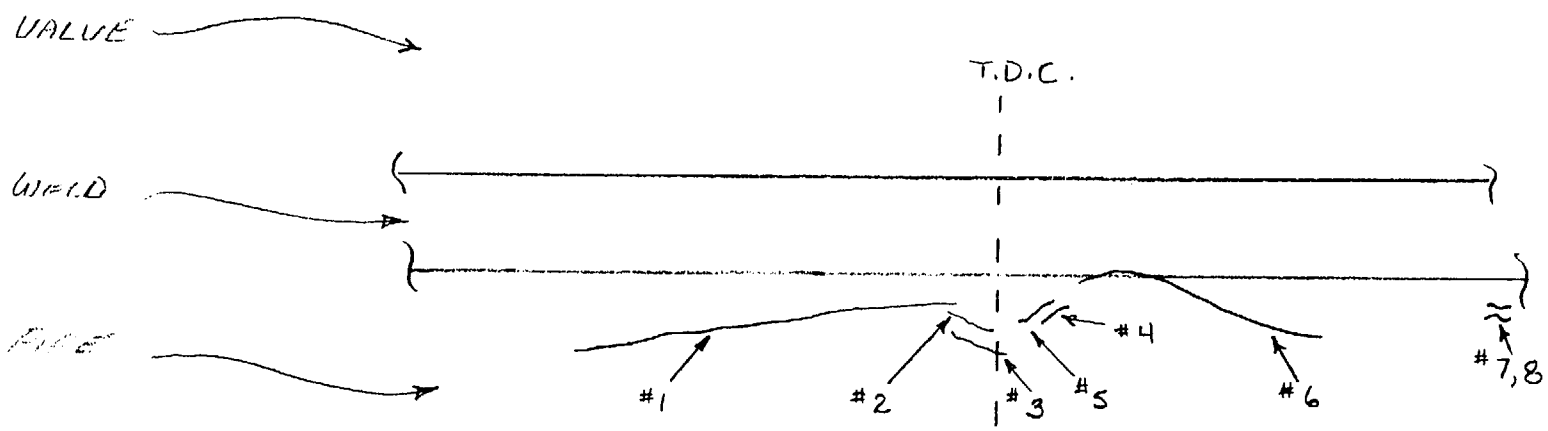

Comments:

#1	3 7/8" LONG	1/64" - 1/32" DEEP	#5	1/4" LONG	1/64" - 1/32" DEEP
#2	3/8" LONG	1/32" DEEP	#6	2" LONG	1/64" - 1/32" DEEP
#3	3/8" LONG	1/16" - 3/32" DEEP	#7	1" LONG	1/64" DEEP
#4	1/4" LONG	1/32" - 1/64" DEEP	#8	1" LONG	1/64" DEEP

Page 2 of 2

ALA1-4304-7
B-J B9.11 Table IWB-3514-2 Volumetric
T=.68"

Ind.	Depth a	Length l	T	a/l	a/t	Allowable a/t	Comments
1	.031"	3.875"	.68"	.008	4.56%	11.1%	Acceptable
2	.031"	.375"	.68"	.083	4.56%	11.5%	Acceptable
3	.063"	.375"	.68"	.168	9.26%	11.8%	Acceptable
4	.031"	.25"	.68"	.124	4.56%	11.6%	Acceptable
5	.031"	.25"	.68"	.124	4.56%	11.6%	Acceptable
6	.031"	2"	.68"	.016	4.56%	11.1%	Acceptable
7	.016"	1"	.68"	.016	2.35%	11.1%	Acceptable
8	.016"	1"	.68"	.016	2.35%	11.1%	Acceptable

Surface Method- length=.227" for thickness = .68" Acceptance Criteria

*Per IWB-3514.3(b), utilizing Allowable flaw standards for Volumetric examination.

All indications would be acceptable per Section XI, Table IWB-3514-2, Austenitic Steel / Volumetric Exam. Method.

Gary Lofthus Date: 5-5-00
Lv. III - UT

Lofthus, Gary A.
From: Nguyen, An N.
Sent: Wednesday, March 29, 2000 5:15 PM
To: Lofthus, Gary A.
Cc: Taufique, Ashfaq
Subject: FW: IER-4304-7

Gary,

I have looked at the pipe specs for this pipe. The 6 inch CCA-22 class is schedule 160, SA-312 Type 304 material. The nominal thickness of the pipe 0.718 inch. Your pipe wall measurement is 0.68 inch. I guessed that is because of the countered bore for the weld.

Service condition for the pipe is 2235 psi @ 550F. Design condition is 2485 psi @650F. Allowable stress at 650F is 16.1 ksi. So the minimum wall thickness required 0.481 inch plus corrosion allowance.

The tolerance on the pipe is 12.5% of the nominal wall. The manufactured minimum wall thickness is 0.628 inch. So, you can remove .051 inch without any need for reconciliation.

Please let me know if that would be enough. I will call you tomorrow.

An Nguyen
☎:205-992-7307
Fax: 205-992-0324

-----Original Message-----
From: Nguyen, An N.
Sent: Friday, March 24, 2000 3:22 PM
To: Taufique, Ashfaq
Cc: Smith, Jimmy
Subject: FW: IER-4304-7

If I understood the E mail correctly, the flaw met the acceptance criteria of IWB 3514.3. This paragraph says that the l/a ratio must meet the requirement of Table IWB-3514-2. I don't think we have to do anything.

An Nguyen
☎:205-992-7307
Fax: 205-992-0324

-----Original Message-----
From: Patko, Andrew J.
Sent: Friday, March 24, 2000 3:00 PM
To: Smith, Jimmy
Cc: Nguyen, An N.; Taufique, Ashfaq; Agold, James M.; Lofthus, Gary A.; Aycock, J. Eric; Monk, Robert L. (Bob); Mayfield, Susan O.; Johnson, J. Randy
Subject: FW: IER-4304-7

ITS has confirmed that the gouges are acceptable per the ASME Section XI criteria. I understand from conversation with Ashfaq and An that SCS can evaluate this condition and will make any needed recommendations for repair. Please target to have this completed by end of the day Wednesday, March/29. Please advise if this will not be possible.

The preliminary thought from SCS was that it will be recommended that the gouges be ground out.

Andy Patko
8-992-5295
Beeper 5294

-----Original Message-----
From: Patko, Andrew J.
Sent: Friday, March 24, 2000 1:37 PM
To: Smith, Jimmy
Cc: Taufique, Ashfaq; Nguyen, An N.; Mayfield, Susan O.; Jones, David H.
Subject: FW: IER-4304-7

Please review this issue and let me know if this evaluation should be done by Westinghouse or if SCS has the analysis on this section of piping. The weld is on the upstream (SI) side of valve QV051A on the 6"safety injection to the cold leg loop 3.

Andy Patko
8-992-5295
Beeper 5294

-----Original Message-----
From: Lofthus, Gary A.
Sent: Thursday, March 23, 2000 3:39 PM
To: Patko, Andrew J.
Cc: Dean, Charles W.; Aycock, J. Eric; Hartline, David B.; Monk, Robert L. (Bob); Agold, James M.
Subject: IER-4304-7

Andy, An IER was written on 8 scratches / gouges in the 6" safety Injection line, Loop C, weld 7. This weld was examined per commitment IN 97-19. This weld had not been previously examined by the ISI program.
We need an evaluation on the gouges and a recommendation on what to do.
Since we are concerned with the thermal stratification, will leaving this "marks" be acceptable? Should they be ground out? What is minimum wall thickness? Will we be getting into a code repair?

Please have SCS review and provide comments. Ricky Allen is on site.
Attached is the IER and pictures of the 'marks". I will send a hard copy in the mail.

ala1-4304-7a.jpg

ala1-4304-7b.jpg

ala1-4304-7c.jpg

IER 1R1643047.doc

Gary A Lofthus
galofthu@southernco.com
205-992-5785 office
205-992-5793 fax

03/30/00 FARLEY NUCLEAR PLANT INFORMATION MANAGEMENT SYSTEM FPAD1501
WORK REQUEST SCREEN

#: 20002516 ORIGINATOR: Gary Lofthus PHONE: 3512
DATE: 3/30/00 TIME: 14:05

FAILURE TRENDING STATUS:
DETECT:
SEVERITY:
SYSTM EFFECT:
PLANT EFFECT:

TPNS#: q1e21 SAFETY CLASS: CRIT COMP:
NAME:
ENV QUAL: REL EQ: CTMT INT: MOVATS: LLRT:
LOC: ASME: ASME REL: INSRV PLAN:
NPRD:

REPORTED CONDITION/DEFICIENCY:
During the ISI examination of ALA1-4304-7, Scratches identified. Remove by polishing. During polishing, monitor metal removed by UT thickness. A max imum of .031" maybe removed. Document final surface condition and final th ickness. Contact Gary Lofthus 3512 prior to starting work. WPC to support polishing surface. This weld is a 6" SI on C loop, cold leg, upstream of valve QV051A, REF. D-175038 sheet 1

PF2 TO SUBMIT/CHANGE REQUEST
PF3 TO QUIT
PF9 TO LIST A FAILURE TRENDING CODE
PF10 TO RETURN TO MENU ; PF11 TO RETURN TO MAIN MENU
ENTER TO DISPLAY TPNS INFORMATION IN BOX
PF21 TO DISPLAY ALL TPNS INFORMATION

NEXT WR#:

03/18/00 13:55:19

SHARED

FNP-0-NDE-100.21
RTYPE: L1.09

FIGURE 1

VISUAL EXAMINATION RECORED VT-1

FARLEY NUCLEAR PLANT

SOUTHERN NUCLEAR OPERATING COMPANY

Plant/Unit	Line Number/Examination Area/Weld No.	Drawing Number	Sheet No.
FARLEY /	ALA1 - 43C4 - 7	ALA1 - 43C4	

Photos	Sketch	Resolution	Technique
✓ Yes ___ B&W	✓ Yes	✓ 1/32" Division (Scale)	✓ Direct
___ No ___ Color	___ No	___ 1/32" Line (Gray Card)	___ Video
			___ Remote

WO/WA	WO # 2000251C IER # 430
Procedure No.	FNP-0-NDE-100.21
Revision No.	1
Examiner/Initial Sig.	[illegible]
Level	II
Examiner/Initial Sig.	N/A
Level	
Date (Month-Day-Year)	04-05-00

Equipment	Lighting	Tools		
✓ Mirror	___ Ambient	✓ Scale	___ Depth Gauge	___ Level
___ Magnifier	✓ Flashlight	___ Micrometer	___ Comparator	✓ CAMBRIDGE GAUGE
___ CCTV	___ Droplight	___ Caliper	___ Weld Gauge	

✓ WELDS & BASE MATERIAL VT-1	SAT	UN-SAT	N/A
Ground Blend Material	___	___	___
Undercut	___	___	✓
Corrosion build-Up	___	___	✓
Gouges	___	✓	___
Evidence of Leakage	___	___	✓
Arc Strikes	___	___	✓
Cracks	___	___	✓
Other **	___	___	___

* Provide details on unsat areas by use of supplemental data sheet.

** Provide details on other areas examined

___ BOLTS, STUDS, AND WASHERS VT-1	SAT	UN-SAT	N/A
Loose Members	___	___	___
Cracks	___	___	___
Corrosion	___	___	___
Gouges	___	___	___
Thread Damage	___	___	___
Deformation	___	___	___
Protective Coating	___	___	___
Evidence of Leakage	___	___	___
Other**	___	___	___

Comments SEE ATTACHED

Larry R. Lofties Lv III · 5-5-00

ANII REVIEW: [illegible] 5/4/00

FIGURE 2

VISUAL EXAMINATION SUPPLEMENTAL DATA SHEET

FARLEY NUCLEAR PLANT

SOUTHERN NUCLEAR OPERATING COMPANY

Plant/Unit	Line Number/Examination Area/Weld No.	Drawing Number	Sheet No.
FARLEY 1	ALA1-4304-7	ALA1-4304	

WO/WA No. ICR #430	Date (Month-Day-Year)	Examiner	Level	Location
Procedure No. FNP-0-NDE-100.21	04-05-00	[illegible]	II	OFF COLD LEG RCP "C" PLATFORM
Revision No. 1				

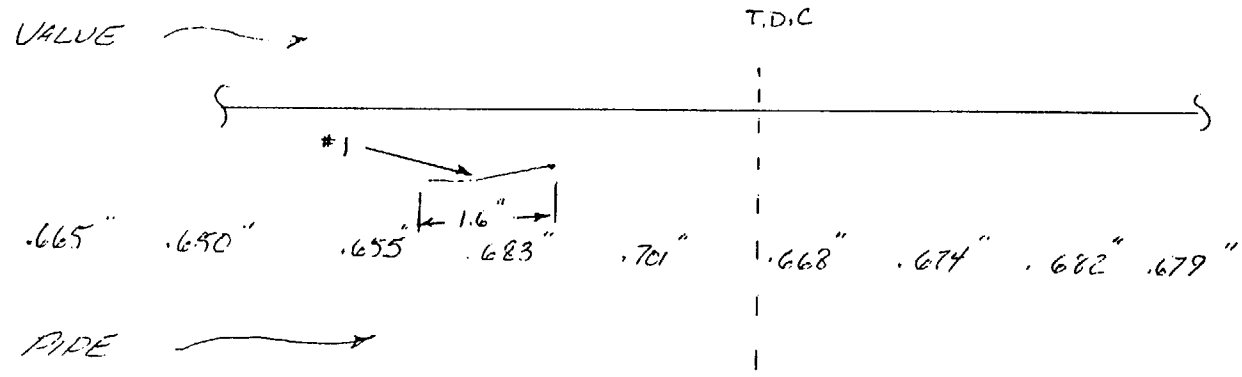

Comments: #1 GOUGE 1/64" DEPTH AND 1.6" LONG

NOTE: PREVIOUS GOUGES #1 THROUGH #8 BUFFED. #1 WHICH WAS 5 7/8" LONG IS NOW 1.6" LONG. ALL OTHER GOUGES WERE COMPLETELY REMOVED. THICKNESS READINGS WERE TAKEN EVERY INCH ALONG BUFFED AREA. MINIMUM THICKNESS OBSERVED WAS RECORDED.

REF WO 20000516

Page ____ of ____

INSERVICE INDICATION EVALUATION WORKSHEET TABLE IWB-35

WELD NUMBER ALA1-4304-7 DATE 04/06/00 SHEET NO. 1

ANGLE N/A

SURFACE CONNECTED FLAW=1; SUBSURFACE=0 1

INDICATION NUMBER	LENGTH L	THICKNESS "t" excluding clad	NEAR DEPTH	FAR DEPTH	Surface a value	Subsurface a value	(LIGAMENT) S	a/l	a/t	Y(S/a)
1	1.60	0.66	0.00	0.03	0.03	0.02	0.00	0.02	4.89	0.00

Y=S/a, if S is less than .4d, then it is a surface fla

IF S<.4d THE FLAW INDICATION IS CLASSIFIED AS A SURFACE INDIC

IF Y>1.0, USE Y=1.0

0.00

CLASS 1 TABLE FOR ALLOWABLE a/t%

ASPECT RATIO	SURFACE	SUBSURFACE	*Y=
0.000	11.152	11.152	
0.020	11.232	11.232	0.00
0.050	11.352	11.352	
0.100	11.602	11.602	
0.150	11.752	11.752	
0.200	11.952	11.952	
0.250	12.001	12.001	
0.300	12.101	12.101	
0.350	12.201	12.201	
0.400	12.301	12.301	
0.450	12.350	12.350	
0.500	12.500	12.500	

----------> ACCEPTABLE SURFACE DEFECT

INSERVICE TABLE IWB-3514-2 **(ALLOWABLE a/t % VALUES)**

Aspect Ratio	<= 0.312"	INTERPOLATED THICKNESS 0.655	1"	INTERPOLATED THICKNESS not used	2"	INTERPOLATED THICKNESS not used	>= 3"
a/l	SURFACE		SURFACE		SURFACE		SURFACE
0	11.7	11.15	10.6	11.20	10.0	11.00	9.5
0.05	12	11.35	10.7	11.20	10.2	11.40	9.6
0.10	12.2	11.60	11.0	11.60	10.4	11.80	9.7
0.15	12.4	11.75	11.1	11.70	10.5	11.70	9.9
0.20	12.5	11.95	11.4	12.10	10.7	11.90	10.1
0.25	12.5	12.00	11.5	12.10	10.9	12.30	10.2
0.30	12.5	12.10	11.7	12.30	11.1	12.50	10.4
0.35	12.5	12.20	11.9	12.60	11.2	12.40	10.6
0.40	12.5	12.30	12.1	12.80	11.4	12.80	10.7
0.45	12.5	12.35	12.2	12.80	11.6	13.00	10.9
0.50	12.5	12.50	12.5	13.30	11.7	12.90	11.1
	SUBSURFACE (ALL *Y)		SUBSURFACE (ALL *Y)		SUBSURFACE (ALL *Y)		SUBSURFACE (ALL *Y)
0	11.7	11.15	10.6	11.20	10.0	11.00	9.5
0.05	12	11.35	10.7	11.20	10.2	11.40	9.6
0.10	12.2	11.60	11.0	11.60	10.4	11.80	9.7
0.15	12.4	11.75	11.1	11.70	10.5	11.70	9.9
0.20	12.5	11.95	11.4	12.10	10.7	11.90	10.1
0.25	12.5	12.00	11.5	12.10	10.9	12.30	10.2
0.30	12.5	12.10	11.7	12.30	11.1	12.50	10.4
0.35	12.5	12.20	11.9	12.60	11.2	12.40	10.6
0.40	12.5	12.30	12.1	12.80	11.4	12.80	10.7
0.45	12.5	12.35	12.2	12.80	11.6	13.00	10.9
0.50	12.5	12.50	12.5	13.30	11.7	12.90	11.1

Lofthus, Gary A.
From: Patko, Andrew J.
Sent: Monday, April 10, 2000 11:38 AM
To: Lofthus, Gary A.
Cc: Taufique, Ashfaq; Nguyen, An N.; Smith, Jimmy; Pappas, Jim B.; Kuhn, Kevin B.
Subject: RE: ALA-4304-7 scratches / gouges

Gary please let us know if you need anything else on this.

Andy Patko
8-992-5295
Beeper 5294

-----Original Message-----
From: Nguyen, An N.
Sent: Monday, April 10, 2000 7:55 AM
To: Patko, Andrew J.; Smith, Jimmy
Cc: Taufique, Ashfaq
Subject: RE: ALA-4304-7 scratches / gouges

I concur with Gary Lofthus' recommendation. The aspect ratio of the remaining indication is approximately 1%, and the depth to thickness ratio is approximately 2.5%. These parameters are well within the limit of the acceptance criteria of Table IWB-3514-2 for in-service volumetric examination. The remaining wall thickness is well above the required minimum manufactured thickness of 0.628.

Based upon the above information, we recommend to leave the scratch as-is.

If you have any questions, please advise.
An Nguyen
Phone: 205-992-7307
Fax: 205-992-0324

-----Original Message-----
From: Patko, Andrew J.
Sent: Friday, April 07, 2000 7:21 AM
To: Smith, Jimmy
Cc: Nguyen, An N.; Taufique, Ashfaq
Subject: FW: ALA-4304-7 scratches / gouges

Jimmy,
The site removed as much of the gouges as possible and would like to leave one as detailed below. Gary would like the SCS letter to reflect that this one gouge remains in the weld and that it is acceptable.

Andy Patko
8-992-5295
Beeper 5294

-----Original Message-----
From: Lofthus, Gary A.

Sent: Thursday, April 06, 2000 5:32 PM
To: Patko, Andrew J.
Cc: Hartline, David B.; Aycock, J. Eric; Agold, James M.
Subject: ALA-4304-7 scratches / gouges

Andy, MWO-20002516 was performed to polish the surface and remove the scratches in the 6" Safety Injection line, Loop C, weld 7. This weld was examined per commitment IN 97-19. This weld had not been previously examined by the ISI program.
Seven scratches were removed, with one scratch remaining. The final dimensions are as follows. Previously listed as Indication 1.) 1.6" length, 1/64" depth with a base material thickness of .655". The work was stopped due to the dose levels, encroaching on the minimum thickness, and not wanting to get into a code weld repair.

An NDE evaluation was performed on the indication in accordance with ASME Section XI acceptance standards for a Class 1 weld, Table IWB-3514-2, and it was acceptable.

We would like a letter / response from SCS Engineering on the acceptability of the weld as-is. This can be sent to David Hartline / Gary Lofthus.

Thank you for your assistance. We look forward to hearing from you.

Gary A Lofthus
galofthu@southernco.com
205-992-5785 office
205-992-5793 fax