Indiana Michigan
Power Company
Cook Nuclear Plant
One Cook Place
Bridgman, MI 49106
616-465-5901

INDIANA MICHIGAN POWER

August 18, 2000

C0800-03
10 CFR 50.90

Docket Nos.: 50-315
50-316

U.S. Nuclear Regulatory Commission
ATTN: Document Control Desk
Mail Stop O-P1-17
Washington, DC 20555-0001

Donald C. Cook Nuclear Plant Units 1 and 2
TECHNICAL SPECIFICATION CHANGE REQUEST
ESSENTIAL SERVICE WATER SYSTEM

References: 1) Letter from J. F. Stang, Jr. (NRC), to R. P. Powers (I&M), "Donald C. Cook-Summary of May 16, 2000, Public Meeting Regarding the Essential Service Water System Configuration," dated May 31, 2000

2) Letter from Robert C. Godley (I&M) to the Document Control Desk (NRC), "Proposed Schedule to Revise Technical Specifications for the Essential Service Water System," dated May 19, 2000

Pursuant to 10 CFR 50.90, Indiana Michigan Power Company (I&M), the Licensee for Donald C. Cook Nuclear Plant Units 1 and 2, proposes to amend Appendix A, "Technical Specifications" (T/S), to DPR-58 and DPR-74. I&M proposes to change T/S 3/4.7.4, "Essential Service Water [ESW] System," and the associated Bases to add requirements that would support cross-connection to the opposite unit. I&M also proposes to delete a provision for a 60-day allowed outage time when an ESW flowpath is not available to support the opposite unit's shutdown functions. Administrative and editorial changes are also made to provide consistency between units, correct typographical errors, improve readability, and improve page layout.

A001

Printed on recycled paper

I&M is submitting this request in accordance with Nuclear Regulatory Commission (NRC) Administrative Letter 98-10, "Dispositioning of Technical Specifications that are Insufficient to Assure Plant Safety," because the current requirements are nonconservative. I&M has determined that an operable ESW pump may be adversely affected by inoperability of an opposite unit ESW pump sharing the same header. With open crosstie valves on the header, an inoperable pump can permit flow to be diverted from the operable ESW pump to the loads on the opposite unit. This could be safety significant when the operable pump is supplying accident loads.

This request satisfies I&M's commitment to submit a license amendment request for ESW operation by August 18, 2000, which was made in Reference 2. No additional commitments are made in this submittal.

Attachment 1 provides a detailed description and safety analysis to support the proposed changes, including an evaluation of the effect of this change on I&M's previous response to Generic Letter 91-13 "Request for Information Related to the Resolution of Generic Issue 130, 'Essential Service Water System Failures at Multi-Unit Sites,' Pursuant to 10 CFR 50.54(f)". Attachments 2A and 2B provide marked up T/S pages for Unit 1 and Unit 2, respectively. Attachments 3A and 3B provide the proposed T/S pages with the changes incorporated for Unit 1 and Unit 2, respectively. Attachment 4 describes the evaluation performed in accordance with 10 CFR 50.92(c), which concludes that no significant hazard is involved. Attachment 5 provides the environmental assessment.

No previous submittals affect T/S pages that are included in this request. If any future submittals affect these T/S pages, then I&M will coordinate changes to the pages with the NRC Project Manager to ensure proper T/S page control when the associated license amendment requests are approved.

Copies of this letter and its attachments are being transmitted to the Michigan Public Service Commission and Michigan Department of Environmental Quality, in accordance with the requirements of 10 CFR 50.91.

Should you have any questions, please contact Mr. Wayne J. Kropp, Director of Regulatory Affairs, at (616) 466-2447.

Sincerely,

R. P. Powers
Vice President

\dmb

Attachments

c: J. E. Dyer
MDEQ - DW & RPD
NRC Resident Inspector
R. Whale

AFFIRMATION

I, Robert P. Powers, being duly sworn, state that I am Vice President of Indiana Michigan Power Company (I&M), that I am authorized to sign and file this Request with the Nuclear Regulatory Commission on behalf of I&M, and that the statements made and the matters set forth herein pertaining to I&M are true and correct to the best of my knowledge, information, and belief.

Indiana Michigan Power Company

Robert P. Powers
Vice President

SWORN TO AND SUBSCRIBED BEFORE ME

THIS 18th DAY OF August, 2000

Pamela J. Schmaltz
Notary Public

PAMELA J. SCHMALTZ
Notary Public, Berrien County, MI
My Commission Expires Oct 2, 2004

My Commission Expires 10-2-04

ATTACHMENT 1 TO C0800-03

DESCRIPTION AND SAFETY ANALYSIS FOR THE PROPOSED CHANGES

A. Summary of Proposed Changes

Indiana Michigan Power Company (I&M), the Licensee for Donald C. Cook Nuclear Plant (CNP) Units 1 and 2, proposes to amend Appendix A, "Technical Specifications" (T/S), to DPR-58 and DPR-74. I&M proposes to change T/S 3/4.7.4, "Essential Service Water [ESW] System," and the associated Bases to add requirements that would apply when the ESW system is cross-connected to the opposite unit. I&M also proposes to delete a provision for a 60-day allowed outage time when an ESW flowpath is not available to support the opposite unit's shutdown functions. Administrative and editorial changes are also made to provide consistency between units, correct typographical errors, improve readability, and improve page layout.

The proposed changes are described in detail in Section E of this attachment. T/S pages that are marked to show the proposed changes are provided in Attachments 2A and 2B for Unit 1 and Unit 2, respectively. Note that these changes may reflect formatting that differs slightly from the current pages. These format changes are intended to improve appearance and are not intended to introduce other changes. The proposed T/S pages, with the changes incorporated, are provided in Attachments 3A and 3B for Unit 1 and Unit 2, respectively.

B. Description of the Current Requirements

T/S 3/4.7.1 requires two operable independent ESW loops in Modes 1-4. An allowed outage time (AOT) of 72 hours is permitted for one inoperable loop. The specification also requires an available ESW flowpath to support the opposite unit whenever the opposite unit is in Modes 1-4. An AOT of 7 days is permitted if this flowpath is inoperable. The AOT may be extended up to 60 days if equivalent shutdown capability is provided.

Surveillance requirements verify positions of unlocked and unsealed valves every 31 days and verify operation of valves that actuate automatically on a safety injection signal every 18 months.

For Unit 1 only, the surveillance requirements specify ESW pump testing per T/S 4.0.5. Although not explicitly stated, the same requirement applies to Unit 2.

C. Bases for the Current Requirements

The requirement that two independent ESW loops in each unit be operable ensures that the ESW requirements for accident mitigation in an operating unit, including single failure considerations, will be met taking credit for only the ESW pumps associated with the operating unit. The

requirement that an available ESW flowpath be maintained in each unit whenever the opposite unit is in Modes 1-4 is based on 10 CFR 50, Appendix R safe shutdown considerations for the opposite unit. In response to Generic Letter (GL) 91-13, "Request for Information Related to the Resolution of Generic Issue 130, 'Essential Service Water System Failures at Multi-Unit Sites,' Pursuant to 10 CFR 50.54(f)," I&M indicated that the 10 CFR 50, Appendix R shutdown flowpath to the opposite unit also satisfied the intent of the GL by ensuring an ESW supply was available to the opposite unit in the event both ESW pumps were lost.

D. Need for Revision of the Requirements

I&M has determined that an operable ESW pump may be adversely affected by inoperability of an opposite unit ESW pump sharing the same header. With open crosstie valves on the header, an inoperable pump can permit flow to be diverted from the operable ESW pump to the loads on the opposite unit. Flow diversion could be safety significant when the operable pump is supplying accident loads during the containment sump recirculation phase of accident mitigation concurrently with operation of the containment spray system (CTS). Under these accident conditions, the amount of ESW required for the CTS heat exchanger and other accident loads in the accident unit, combined with the flow diverted to cooling loads in the non-accident unit, would exceed the capacity of a single ESW pump. I&M confirmed that T/S 3.7.4.1 is deficient in that it does not preclude the system alignment that would result in loss of flow. The deficiency can be eliminated by requiring at least one crosstie valve to be closed whenever an ESW pump on a header is not operable and the opposite unit is in Modes 1-4. Figure 1 is a simplified drawing that shows the ESW pumps for each unit and their crosstie capability.

In accordance with the guidance in Administrative Letter 98-10, "Dispositioning of Technical Specifications that are Insufficient to Assure Plant Safety," administrative controls were implemented as a compensatory measure for the nonconservative T/S requirements. Although these controls are appropriate as a short term action, a timely license amendment request is required for the permanent resolution. I&M also reviewed the condition for reportability and submitted Licensee Event Report 316-2000-002-00, "Operation Outside Design Bases and Entry Into [T/S] 3.0.3 Due to Nonconservative [T/S]."

At a public meeting held on May 16, 2000, at Nuclear Regulatory Commission (NRC) headquarters in Rockville, Maryland, I&M described the concern and the administrative controls for the shared ESW system to ensure the safety of CNP Unit 2 operation with Unit 1 remaining shutdown. At the May 16, 2000, public meeting, I&M also committed to eliminate the additional 60-day AOT if there is no ESW flow path available to the opposite unit. Reference 1 in the cover letter is a summary of that meeting. Following that meeting, I&M submitted a letter (Reference 2 in the cover letter) to the NRC with a commitment to submit a license amendment request for ESW operation by August 18, 2000. This submittal satisfies the commitment made in Reference 2.

E. Description of the Proposed Changes

I&M proposes to revise the applicability for T/S 3.7.4.1.a so that two ESW loops are also required to be operable when the opposite unit is Modes 1, 2, 3, and 4. I&M proposes to add a new action statement to address crosstie valve closure when two ESW pumps on one unit are not maintained operable when the opposite unit is in Modes 1-4. For clarity, the action statements are presented on the basis of which unit is in Modes 1-4, rather than the previous criteria of "When Specification 3.7.4.1.a is applicable:" or "When Specification 3.7.4.1.b is applicable:" The proposed action statement specifies that when the limiting condition for operation (LCO) is not met for the opposite unit, at least one crosstie valve must be closed within one hour or action a of Specification 3.7.4.1 must be entered for the opposite unit's ESW pump (sharing the same header with the inoperable ESW pump).

I&M proposes to add a new Surveillance Requirement to ensure that a closed crosstie valve in the shutdown flowpath for the opposite unit can be opened from the control room. Changes are proposed to the Bases to clarify the relationship between ESW headers and ESW loops and describe the potential for ESW pump flow diversion that is precluded by the new requirements for ESW pump operability. The impact of a closed crosstie valve on the alternate shutdown flowpath is also described in the Bases to ensure the impact is understood.

I&M proposes to delete the provision for an extension of the AOT of up to 60 days for an inoperable Appendix R flowpath from the action for Specification 3.7.4.1.b. I&M would retain the 7-day AOT. The Bases are similarly modified in the paragraph that provides a combined discussion of Specifications 3/4.7.3 for component cooling water and 3/4.7.4 for ESW.

I&M proposes to make administrative and editorial changes as follows:

For both units the Bases for T/S 3/4.7.4 are revised to delete the words "...conditions within acceptable limits." and substitute the word "...analyses."

For Unit 2 only, a surveillance requirement to verify pump performance in accordance with T/S 4.0.5 is added.

For Unit 1 T/S page 3/4 7-17 and Bases page B 3/4 7-4, and for Unit 2 Bases page B 3/4 7-4, format revisions are made to include appropriate headers and footers.

For Unit 1 only, the missing word "to" is added to the Action for T/S 3.7.4.1.b.

For Unit 1 only, a typographical error in the word "single" is corrected in the Bases for T/S 3/4.7.4.

Attachments 2A and 2B show the T/S pages marked to show the proposed changes.

F. Bases for the Proposed Changes

The ESW system at CNP Unit 1 and Unit 2 consists of two independent headers shared between the two units. Figure 1 of this attachment shows the basic configuration. Each unit has two ESW pumps, one connected to each header. The portion of a header associated with a single unit and that unit's ESW pump and cooling loads is considered a loop. T/S 3/4.7.4.1 requires the operability of two independent loops in each unit. Each header may be split by one of two crosstie valves, with one valve located in each unit. Although each header is physically shared between units and CNP typically operates with the crosstie valves open, credit is not taken for the opposite unit's pumps in meeting LCOs 3.7.4.1.a or single-failure criteria for either unit. With one ESW pump not operable, the associated unit is in a 72-hour action statement. Based on the preceding discussion, it is concluded that operation of CNP with a closed crosstie valve is within the current design and licensing basis and maintains the single-failure design objectives of the system. By closing a crosstie valve when necessary to isolate an operable ESW pump from an inoperable pump in the opposite unit, unacceptable flow diversions during accident conditions cannot occur and the single-failure design of the system is preserved.

For 10 CFR 50, Appendix R fire safe shutdown considerations in each unit, reliance is placed on the availability of an ESW flow path from the opposite unit. The closure of a crosstie valve does not render the Appendix R flowpath unavailable since the valves are equipped with local manual operators. The proposed change to the Bases adds text regarding the role of this alternate flowpath in addressing GL 91-13 issues. The proposed text indicates that a closed crosstie valve does not render the flow path unavailable as long as the crosstie valve can be opened from the control room. The proposed surveillance requirements ensure the opening capability is maintained. The 92-day surveillance interval selected is equivalent to the surveillance interval for the crosstie valves conducted under the CNP Inservice Test (IST) program. The surveillance interval is also consistent with the draft T/S provided in GL 91-13. The crosstie valves are described in the program as having a safety function in both the open and closed positions. They are subject to quarterly full stroke exercising to confirm operability. Additional discussion of the GL is provided in the discussion of risk in Section G.

The proposed change to delete the provision allowing the Appendix R flowpath to be inoperable for an additional 60 days (total of 67 days) is considered a prudent change because, based on past operating experience, this additional time has not been necessary. The proposed change ensures the shutdown flow path will not be unavailable for more than 7 days.

The administrative and editorial changes provide consistency between units, correct typographical errors, improve readability and improve page layout. The changes improve readability and are not intended to alter the meaning.

The addition of the surveillance requirement invoking T/S 4.0.5 for Unit 2 is based on ensuring consistency between the Unit 1 and Unit 2 requirements. In Amendment 164 to DPR-58 and

Amendment 149 to DPR-74, the NRC approved changes requiring that all safety-related pumps in the T/S be tested at a frequency specified in T/S 4.0.5. T/S 4.0.5 includes inservice testing of pumps in accordance with ASME Code, Section XI, unless written relief has been granted. The proposed change to add this requirement is consistent with the changes approved in amendments 164 and 149. Furthermore, the Unit 2 ESW pumps are already tested as required in the IST program.

G. Discussion of Risk

Implementation of the prescribed T/S changes maintains the design and licensing basis of the CNP ESW system by preserving the single failure capability of an operating unit when the opposite unit has one or more inoperable ESW pumps. Therefore, the accident analyses presented in Chapter 14 of the CNP Updated Final Safety Analysis Report remain valid and bounding and the design and licensing basis is preserved by the proposed T/S change. The risk associated with the original design and licensing basis is not changed.

On September 16, 1991, the NRC issued GL 91-13 to multi-unit sites that have only two ESW pumps per plant with crosstie capabilities. I&M responded in letter from E. E. Fitzpatrick to Dr. T. E. Murley, dated March 13, 1992. I&M concluded that the CNP T/S and plant procedures met the intent of the GL with no changes necessary. The NRC accepted this position, as documented in their letter from J. F. Stang, Jr., to E. E. Fitzpatrick dated September 6, 1992.

Operation of CNP with closed ESW header crosstie valves is consistent with the objectives of the staff in issuing GL 91-13. The GL described Generic Issue (GI) 130 that was concerned with the potential for a complete loss of ESW to initiate a loss-of-coolant accident via failed seals in the reactor coolant pumps. The scenario postulated in the GL was loss of an operating ESW pump while already in the T/S action on the other pump. Based on a generic probabilistic risk assessment (PRA) using a representative model, the staff concluded that maintaining the capability to supply ESW to an operating plant from an opposite shutdown unit resulted in a major reduction in risk. However, the potential unavailability of the ESW pumps in a shutdown unit (pumps not required by T/S) would preclude use of this option. Under the backfit rule of 10 CFR 50.109, the staff sought to have the affected utilities adopt T/S changes that would ensure a shut down unit in Modes 5 and 6 maintained the capability to supply ESW to an operating unit.

At the time that GL 91-13 was issued, the staff's objectives had already been met by the CNP T/Ss and no additional actions were identified as necessary in the I&M response. This position was accepted by the staff. As previously discussed, the CNP T/Ss for ESW require that each unit maintain at least one ESW pump available for the opposite unit whenever the opposite unit was in Modes 1-4 (Appendix R safe shutdown capability). This was a major reason I&M concluded that the staff's objectives were already met. I&M also noted that the normal operating practice at CNP was to maintain the ESW header crosstie valves open, even when a unit was shutdown.

I&M believed that this practice reduced the possibility that the valves could not be opened if required. At the time of I&M's original assessment, the potential need to operate with closed crosstie valves, as described in this submittal, was not recognized. As discussed in the GL, the staff did not request that the crosstie valves be open during normal operation as long as they could be opened when necessary. As described in the frequency estimate for GI 130, the staff also indicated that:

> Improvement in valve realignments (crosstie) procedures were not believed to contribute significantly to core-melt frequency, but the resolution of this issue should reexamine the need for T/S or procedures for these crosstie operations.

In summary, the proposed changes will require plant operation with a closed crosstie valve(s) to preclude flow diversion from an operable pump. The proposed surveillance requirement when a crosstie valve is closed in the available shutdown flowpath provides assurance that the flowpath can be restored when needed. The proposed deletion of the 60-day extended AOT option from the Action for T/S 3.7.4.1.b ensures the shutdown flowpath will not be unavailable for more than 7 days.

Based on the above, I&M has concluded that this proposed amendment request is consistent with the reduction in risk sought by the staff under GL 91-13. No additional actions are proposed for GL 91-13 as a result of this amendment request.

H. Schedule Requirements

I&M requests NRC approval of this submittal in a timely manner. No specific date is requested for NRC approval. As previously described, I&M has implemented appropriate administrative controls that will ensure conservative operation of CNP while this submittal is under staff review. The administrative controls will be cancelled after the proposed changes are approved and implemented.

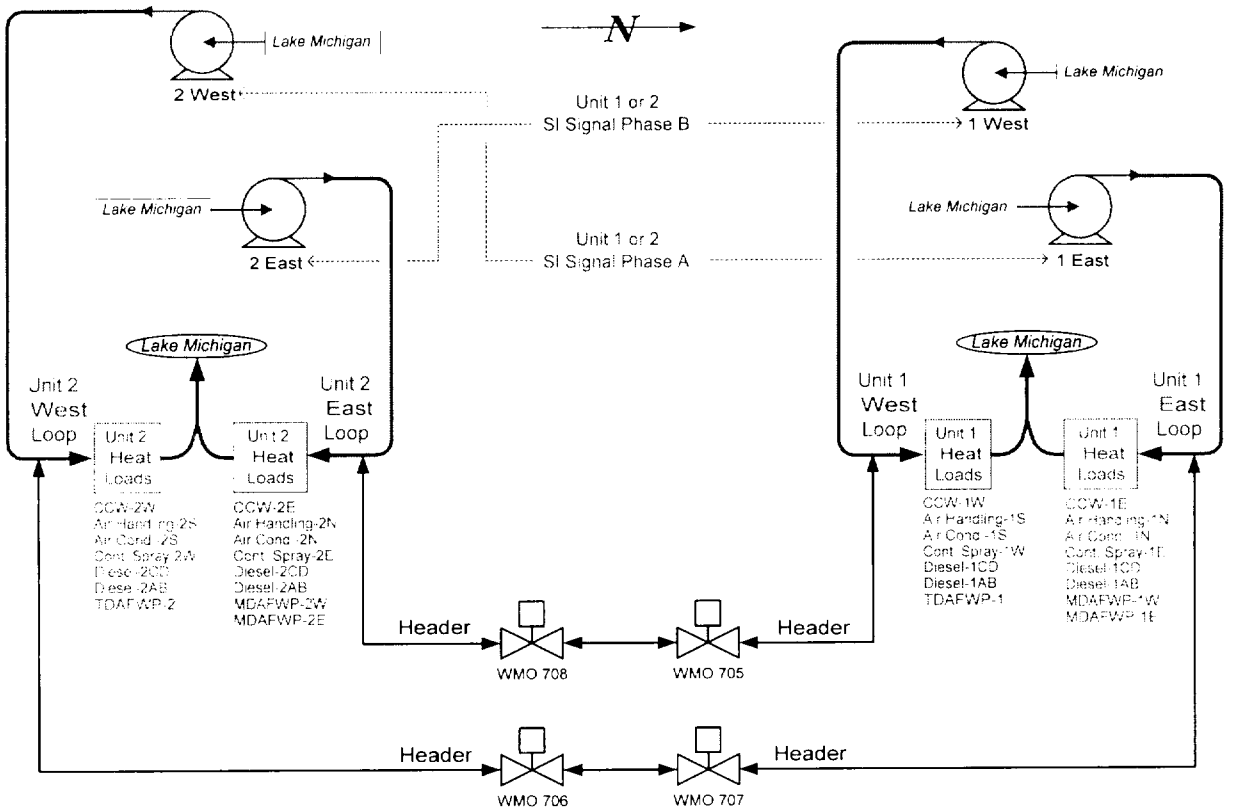

Donald C. Cook Nuclear Plant Simplified Schematic of the Essential Service Water System
Figure 1

ATTACHMENT 2A TO C0800-03

TECHNICAL SPECIFICATIONS PAGES
MARKED TO SHOW PROPOSED CHANGES

REVISED PAGES
UNIT 1

3/4 7-17

B 3/4 7-4

3/4.7.4 ESSENTIAL SERVICE WATER SYSTEM

LIMITING CONDITION FOR OPERATION

3.7.4.1 a. At least two independent essential service water loops shall be OPERABLE.

b. At least one essential service water flowpath associated with support of Unit 2 shutdown functions shall be available.

APPLICABILITY: Specification 3.7.4.1.a – **Either Unit in** MODES 1, 2, 3, and 4.
Specification 3.7.4.1.b - At all times when Unit 2 is in MODES 1, 2, 3 or 4.

ACTION:

a. When ~~Specification 3.7.4.1.a is applicable~~ **Unit 1 is in MODES 1, 2, 3, and 4**:

With only one essential service water loop OPERABLE, restore at least two loops to OPERABLE status within 72 hours, or be in at least HOT STANDBY within the next 6 hours and in COLD SHUTDOWN within the following 30 hours.

b. When ~~Specification 3.7.4.1.b is applicable~~ **Unit 2 is in MODES 1, 2, 3 and 4**:

1. **With any Unit 1 essential service water pump not OPERABLE, within one hour close at least one crosstie valve on the associated header or have Unit 2 enter ACTION a for Unit 2 Specification 3.7.4.1 for the Unit 2 essential service water pump sharing the same header with the inoperable Unit 1 essential service water pump.**

2. With no essential service water flow path available in support of Unit 2 shutdown functions, return at least one flow path **to** available status within 7 days ~~or provide equivalent shutdown capability in Unit 2 and return the equipment to available status within the next 60 days~~, or have Unit 2 in HOT STANDBY within the next 12 hours and HOT SHUTDOWN within the following 24 hours. The requirements of Specification 3.0.4 are not applicable.

SURVEILLANCE REQUIREMENTS

4.7.4.1 At least two essential service water loops shall be demonstrated OPERABLE:

a. At least once per 31 days by verifying that each valve (manual, power operated or automatic) servicing safety related equipment that is not locked, sealed, or otherwise secured in position, is in its correct position.

b. At least once per 18 months during shutdown, by verifying that each automatic valve servicing safety related equipment actuates to its correct position on a Safety Injection test signal.

c. By verifying pump performance pursuant to Specification 4.0.5.

d. At least once per 92 days by verifying that each closed crosstie valve, in the available essential service water flowpath associated with support of Unit 2 shutdown functions, can be cycled from the control room.

3/4.7.2 STEAM GENERATOR PRESSURE/TEMPERATURE LIMITATION

The limitation on steam generator pressure and temperature ensures that the pressure induced stresses in the steam generators do not exceed the maximum allowable fracture toughness stress limits. The limitations of 70°F and 200 psig are based on average steam generator impact values taken at +10°F and are sufficient to prevent brittle fracture.

3/4.7.3 COMPONENT COOLING WATER SYSTEM

The OPERABILITY of the component cooling water system ensures that sufficient cooling capacity is available for continued operation of safety related equipment during normal and accident conditions. The redundant cooling capacity of this system, assuming a single failure, is consistent with the assumptions used in the accident analyses.

3/4.7.4 ESSENTIAL SERVICE WATER SYSTEM

The OPERABILITY of the essential service water **(ESW)** system ensures that sufficient cooling capacity is available for continued operation of safety related equipment during normal and accident conditions. The redundant cooling capacity of this system, assuming a ~~signal~~ **single** failure, is consistent with the assumptions used in the accident ~~conditions within acceptable limits~~ **analyses**.

The ESW system consists of two independent headers shared between the two units. Each unit has two ESW pumps, one connected to each header. The portion of the header associated with each unit is designated as a loop and consists of that unit's ESW pump and associated cooling loads. Each header may be split into the two independent loops by closing one of two crosstie valves.

Limiting Condition for Operation 3.7.4.1.a also ensures that an inoperable Unit 1 ESW pump does not result in flow being diverted from an OPERABLE Unit 2 ESW pump sharing the same header. To be considered OPERABLE for supporting Unit 2 operation in MODES 1, 2, 3, and 4, the Unit 1 ESW pump must meet the OPERABILITY requirements for MODES 1, 2, 3, and 4. A Unit 1 ESW pump that is not OPERABLE, but is available to be started manually, may be considered part of the shutdown flowpath required by Specification 3.7.4.1.b provided at least one crosstie valve in the shutdown flowpath is closed and capable of being opened from the control room.

Limiting Condition for Operation 3.7.4.1.b ensures a shutdown cooling flow path from Unit 1 is maintained available for Unit 2. The available shutdown cooling flow path is necessary to support Unit 2 in the event of a complete loss of ESW in Unit 2 or a 10 CFR 50 Appendix R fire. The available flowpath may have a closed crosstie valve(s) when required by Action b.1. Specification 4.7.4.1.d ensures a closed crosstie valve can be opened from the control room to support the shutdown flow path during a complete loss of ESW in Unit 2. For 10 CFR 50 Appendix R, it is assumed that the valve can be opened by local manual operation.

3/4.7.3 and 3/4.7.4

The OPERABILITY of the Unit 1 flowpaths which support Unit 2 shutdown functions ensures the availability of cooling functions on Unit 2 and addresses the requirements of 10 CFR 50 Appendix R. The required flowpath consists of a pump and associated water supplies and delivery systems. Fire watches posted in the affected opposite unit areas (i.e., Unit 2 areas requiring use of the Unit 1 component cooling water system ~~or essential service water system~~ in the event of a fire) may serve as the equivalent shutdown capability specified in the action statements of Specifications 3.7.3.1 ~~and 3.7.4.1~~. In the affected areas, either establish continuous fire watches or verify the OPERABILITY of fire detectors per Specification 4.3.3.7 and establish hourly fire watch patrols. The required opposite unit equipment along with the surveillance requirements necessary to ensure that this equipment is capable of fulfilling its intended Appendix R alternate safe shutdown functions have been established and are included in a plant procedure. An additional plant procedure details how the above noted fire watches will be implemented.

ATTACHMENT 2B TO C0800-03

TECHNICAL SPECIFICATIONS PAGES
MARKED TO SHOW PROPOSED CHANGES

REVISED PAGES
UNIT 2

3/4 7-13

B 3/4 7-4

3/4.7.4 ESSENTIAL SERVICE WATER SYSTEM

LIMITING CONDITION FOR OPERATION

3.7.4.1 a. At least two independent essential service water loops shall be OPERABLE.

b. At least one essential service water flowpath associated with support of Unit 1 shutdown functions shall be available.

APPLICABILITY: Specification 3.7.4.1.a - **Either Unit in** MODES 1, 2, 3, and 4.
Specification 3.7.4.1.b - At all times when Unit 1 is in MODES 1, 2, 3, or 4.

ACTION:

a. When ~~Specification 3.7.4.1.a is applicable~~ **Unit 2 is in MODES 1, 2, 3, and 4**:

With only one essential service water loop OPERABLE, restore at least two loops to OPERABLE status within 72 hours or be in at least HOT STANDBY within the next 6 hours and in COLD SHUTDOWN within the following 30 hours.

b. When ~~Specification 3.7.4.1.b is applicable~~ **Unit 1 is in MODES 1, 2, 3 and 4**:

1. **With any Unit 2 essential service water pump not OPERABLE, within one hour close at least one crosstie valve on the associated header or have Unit 1 enter ACTION a for Unit 1 Specification 3.7.4.1 for the Unit 1 essential service water pump sharing the same header with the inoperable Unit 2 essential service water pump.**

2. With no essential service water flow path available in support of Unit 1 shutdown functions, return at least one flow path to available status within 7 days ~~or provide equivalent shutdown capability in Unit 1 and return the equipment to service within the next 60 days~~, or have Unit 1 in HOT STANDBY within the next 12 hours and HOT SHUTDOWN within the following 24 hours. The requirements of Specification 3.0.4 are not applicable.

SURVEILLANCE REQUIREMENTS

4.7.4.1 At least two essential service water loops shall be demonstrated OPERABLE:

a. At least once per 31 days by verifying that each valve (manual, power operated or automatic) servicing safety related equipment that is not locked, sealed, or otherwise secured in position, is in its correct position.

b. At least once per 18 months during shutdown, by verifying that each automatic valve servicing safety related equipment actuates to its correct position on a Safety Injection test signal.

c. By verifying pump performance pursuant to Specification 4.0.5.

d. At least once per 92 days by verifying that each closed crosstie valve, in the available essential service water flowpath associated with support of Unit 1 shutdown functions, can be cycled from the control room.

3/4.7.2 STEAM GENERATOR PRESSURE/TEMPERATURE LIMITATION

The limitation on steam generator pressure and temperature ensures that the pressure induced stresses in the steam generators do not exceed the maximum allowable fracture toughness stress limits. The limitations of 70°F and 200 psig are based on average steam generator impact values taken at -10°F and are sufficient to prevent brittle fracture.

3/4.7.3 COMPONENT COOLING WATER SYSTEM

The OPERABILITY of the component cooling water system ensures that sufficient cooling capacity is available for continued operation of safety related equipment during normal and accident conditions. The redundant cooling capacity of this system, assuming a single failure, is consistent with the assumptions used in the accident analyses.

3/4.7.4 ESSENTIAL SERVICE WATER SYSTEM

The OPERABILITY of the essential service water **(ESW)** system ensures that sufficient cooling capacity is available for continued operation of safety related equipment during normal and accident conditions. The redundant cooling capacity of this system, assuming a single failure, is consistent with the assumptions used in the accident ~~conditions within acceptable limits~~ **analyses**.

The ESW system consists of two independent headers shared between the two units. Each unit has two ESW pumps, one connected to each header. The portion of the header associated with each unit is designated as a loop and consists of that unit's ESW pump and associated cooling loads. Each header may be split into the two independent loops by closing one of two crosstie valves.

Limiting Condition for Operation 3.7.4.1.a also ensures that an inoperable Unit 2 ESW pump does not result in flow being diverted from an OPERABLE Unit 1 ESW pump sharing the same header. To be considered OPERABLE for supporting Unit 1 operation in MODES 1, 2, 3, and 4, the Unit 2 ESW pump must meet the OPERABILITY requirements for MODES 1, 2, 3, and 4. A Unit 2 ESW pump that is not OPERABLE, but is available to be started manually, may be considered part of the shutdown flowpath required by Specification 3.7.4.1.b provided at least one crosstie valve in the shutdown flowpath is closed and capable of being opened from the control room.

Limiting Condition for Operation 3.7.4.1.b ensures a shutdown cooling flow path from Unit 2 is maintained available for Unit 1. The available shutdown cooling flow path is necessary to support Unit 1 in the event of a complete loss of ESW in Unit 1 or a 10 CFR 50 Appendix R fire. The available flowpath may have a closed crosstie valve(s) when required by Action b.1. Specification 4.7.4.1.d ensures a closed crosstie valve can be opened from the control room to support the shutdown flow path during a complete loss of ESW in Unit 1. For 10 CFR 50 Appendix R, it is assumed that the valve can be opened by local manual operation.

3/4.7.3 and 3/4.7.4

The OPERABILITY of the Unit 2 flowpaths which support Unit 1 shutdown functions ensures the availability of cooling functions on Unit 1 and addresses the requirements of 10 CFR 50 Appendix R. The required flowpath consists of a pump and associated water supplies and delivery systems. Fire watches posted in the affected opposite unit areas (i.e., Unit 1 areas requiring use of the Unit 2 component cooling water system ~~or essential service water system~~ in the event of a fire) may serve as the equivalent shutdown capability specified in the action statements of Specifications 3.7.3.1 ~~and 3.7.4.1~~. In the affected areas, either establish continuous fire watches or verify the OPERABILITY of fire detectors per Specification 4.3.3.7 and establish hourly fire watch patrols. The required opposite unit equipment along with the surveillance requirements necessary to ensure that this equipment is capable of fulfilling its intended Appendix R alternate safe shutdown function have been established and are included in a plant procedure. An additional plant procedure details how the above noted fire watches will be implemented.

ATTACHMENT 3A TO C0800-03

PROPOSED TECHNICAL SPECIFICATIONS PAGES

REVISED PAGES
UNIT 1

3/4 7-17

B 3/4 7-4

3/4.7.4 ESSENTIAL SERVICE WATER SYSTEM

LIMITING CONDITION FOR OPERATION

3.7.4.1 a. At least two independent essential service water loops shall be OPERABLE.

b. At least one essential service water flowpath associated with support of Unit 2 shutdown functions shall be available.

APPLICABILITY: Specification 3.7.4.1.a – Either Unit in MODES 1, 2, 3, and 4.
Specification 3.7.4.1.b - At all times when Unit 2 is in MODES 1, 2, 3 or 4.

ACTION:

a. When Unit 1 is in MODES 1, 2, 3, and 4:

With only one essential service water loop OPERABLE, restore at least two loops to OPERABLE status within 72 hours, or be in at least HOT STANDBY within the next 6 hours and in COLD SHUTDOWN within the following 30 hours.

b. When Unit 2 is in MODES 1, 2, 3 and 4:

1. With any Unit 1 essential service water pump not OPERABLE, within one hour close at least one crosstie valve on the associated header or have Unit 2 enter ACTION a for Unit 2 Specification 3.7.4.1 for the Unit 2 essential service water pump sharing the same header with the inoperable Unit 1 essential service water pump.

2. With no essential service water flow path available in support of Unit 2 shutdown functions, return at least one flow path to available status within 7 days, or have Unit 2 in HOT STANDBY within the next 12 hours and HOT SHUTDOWN within the following 24 hours. The requirements of Specification 3.0.4 are not applicable.

SURVEILLANCE REQUIREMENTS

4.7.4.1 At least two essential service water loops shall be demonstrated OPERABLE:

a. At least once per 31 days by verifying that each valve (manual, power operated or automatic) servicing safety related equipment that is not locked, sealed, or otherwise secured in position, is in its correct position.

b. At least once per 18 months during shutdown, by verifying that each automatic valve servicing safety related equipment actuates to its correct position on a Safety Injection test signal.

c. By verifying pump performance pursuant to Specification 4.0.5.

d. At least once per 92 days by verifying that each closed crosstie valve, in the available essential service water flowpath associated with support of Unit 2 shutdown functions, can be cycled from the control room.

3/4.7.2 STEAM GENERATOR PRESSURE/TEMPERATURE LIMITATION

The limitation on steam generator pressure and temperature ensures that the pressure induced stresses in the steam generators do not exceed the maximum allowable fracture toughness stress limits. The limitations of 70°F and 200 psig are based on average steam generator impact values taken at +10°F and are sufficient to prevent brittle fracture.

3/4.7.3 COMPONENT COOLING WATER SYSTEM

The OPERABILITY of the component cooling water system ensures that sufficient cooling capacity is available for continued operation of safety related equipment during normal and accident conditions. The redundant cooling capacity of this system, assuming a single failure, is consistent with the assumptions used in the accident analyses.

3/4.7.4 ESSENTIAL SERVICE WATER SYSTEM

The OPERABILITY of the essential service water (ESW) system ensures that sufficient cooling capacity is available for continued operation of safety related equipment during normal and accident conditions. The redundant cooling capacity of this system, assuming a single failure, is consistent with the assumptions used in the analyses.

The ESW system consists of two independent headers shared between the two units. Each unit has two ESW pumps, one connected to each header. The portion of the header associated with each unit is designated as a loop and consists of that unit's ESW pump and associated cooling loads. Each header may be split into the two independent loops by closing one of two crosstie valves.

Limiting Condition for Operation 3.7.4.1.a also ensures that an inoperable Unit 1 ESW pump does not result in flow being diverted from an OPERABLE Unit 2 ESW pump sharing the same header. To be considered OPERABLE for supporting Unit 2 operation in MODES 1, 2, 3, and 4, the Unit 1 ESW pump must meet the OPERABILITY requirements for MODES 1, 2, 3, and 4. A Unit 1 ESW pump that is not OPERABLE, but is available to be started manually, may be considered part of the shutdown flowpath required by Specification 3.7.4.1.b provided at least one crosstie valve in the shutdown flowpath is closed and capable of being opened from the control room.

Limiting Condition for Operation 3.7.4.1.b ensures a shutdown cooling flow path from Unit 1 is maintained available for Unit 2. The available shutdown cooling flow path is necessary to support Unit 2 in the event of a complete loss of ESW in Unit 2 or a 10 CFR 50 Appendix R fire. The available flowpath may have a closed crosstie valve(s) when required by Action b.1. Specification 4.7.4.1.d ensures a closed crosstie valve can be opened from the control room to support the shutdown flow path during a complete loss of ESW in Unit 2. For 10 CFR 50 Appendix R, it is assumed that the valve can be opened by local manual operation.

3/4.7.3 and 3/4.7.4

The OPERABILITY of the Unit 1 flowpaths which support Unit 2 shutdown functions ensures the availability of cooling functions on Unit 2 and addresses the requirements of 10 CFR 50 Appendix R. The required flowpath consists of a pump and associated water supplies and delivery systems. Fire watches posted in the affected opposite unit areas (i.e., Unit 2 areas requiring use of the Unit 1 component cooling water system in the event of a fire) may serve as the equivalent shutdown capability specified in the action statement of Specification 3.7.3.1. In the affected areas, either establish continuous fire watches or verify the OPERABILITY of fire detectors per Specification 4.3.3.7 and establish hourly fire watch patrols. The required opposite unit equipment along with the surveillance requirements necessary to ensure that this equipment is capable of fulfilling its intended Appendix R alternate safe shutdown functions have been established and are included in a plant procedure. An additional plant procedure details how the above noted fire watches will be implemented.

ATTACHMENT 3B TO C0800-03

PROPOSED TECHNICAL SPECIFICATIONS PAGES

REVISED PAGES
UNIT 2

3/4 7-13

B 3/4 7-4

3/4.7.4 ESSENTIAL SERVICE WATER SYSTEM

LIMITING CONDITION FOR OPERATION

3.7.4.1 a. At least two independent essential service water loops shall be OPERABLE.

b. At least one essential service water flowpath associated with support of Unit 1 shutdown functions shall be available.

APPLICABILITY: Specification 3.7.4.1.a - Either Unit in MODES 1, 2, 3, and 4.
Specification 3.7.4.1.b - At all times when Unit 1 is in MODES 1, 2, 3, or 4.

ACTION:

a. When Unit 2 is in MODES 1, 2, 3, and 4:

With only one essential service water loop OPERABLE, restore at least two loops to OPERABLE status within 72 hours or be in at least HOT STANDBY within the next 6 hours and in COLD SHUTDOWN within the following 30 hours.

b. When Unit 1 is in MODES 1, 2, 3 and 4:

1. With any Unit 2 essential service water pump not OPERABLE, within one hour close at least one crosstie valve on the associated header or have Unit 1 enter ACTION a for Unit 1 Specification 3.7.4.1 for the Unit 1 essential service water pump sharing the same header with the inoperable Unit 2 essential service water pump.

2. With no essential service water flow path available in support of Unit 1 shutdown functions, return at least one flow path to available status within 7 days, or have Unit 1 in HOT STANDBY within the next 12 hours and HOT SHUTDOWN within the following 24 hours. The requirements of Specification 3.0.4 are not applicable.

SURVEILLANCE REQUIREMENTS

4.7.4.1 At least two essential service water loops shall be demonstrated OPERABLE:

a. At least once per 31 days by verifying that each valve (manual, power operated or automatic) servicing safety related equipment that is not locked, sealed, or otherwise secured in position, is in its correct position.

b. At least once per 18 months during shutdown, by verifying that each automatic valve servicing safety related equipment actuates to its correct position on a Safety Injection test signal.

c. By verifying pump performance pursuant to Specification 4.0.5.

d. At least once per 92 days by verifying that each closed crosstie valve, in the available essential service water flowpath associated with support of Unit 1 shutdown functions, can be cycled from the control room.

3/4.7.2 STEAM GENERATOR PRESSURE/TEMPERATURE LIMITATION

The limitation on steam generator pressure and temperature ensures that the pressure induced stresses in the steam generators do not exceed the maximum allowable fracture toughness stress limits. The limitations of 70°F and 200 psig are based on average steam generator impact values taken at +10°F and are sufficient to prevent brittle fracture.

3/4.7.3 COMPONENT COOLING WATER SYSTEM

The OPERABILITY of the component cooling water system ensures that sufficient cooling capacity is available for continued operation of safety related equipment during normal and accident conditions. The redundant cooling capacity of this system, assuming a single failure, is consistent with the assumptions used in the accident analyses.

3/4.7.4 ESSENTIAL SERVICE WATER SYSTEM

The OPERABILITY of the essential service water (ESW) system ensures that sufficient cooling capacity is available for continued operation of safety related equipment during normal and accident conditions. The redundant cooling capacity of this system, assuming a single failure, is consistent with the assumptions used in the accident analyses.

The ESW system consists of two independent headers shared between the two units. Each unit has two ESW pumps, one connected to each header. The portion of the header associated with each unit is designated as a loop and consists of that unit's ESW pump and associated cooling loads. Each header may be split into the two independent loops by closing one of two crosstie valves.

Limiting Condition for Operation 3.7.4.1.a also ensures that an inoperable Unit 2 ESW pump does not result in flow being diverted from an OPERABLE Unit 1 ESW pump sharing the same header. To be considered OPERABLE for supporting Unit 1 operation in MODES 1, 2, 3, and 4, the Unit 2 ESW pump must meet the OPERABILITY requirements for MODES 1, 2, 3, and 4. A Unit 2 ESW pump that is not OPERABLE, but is available to be started manually, may be considered part of the shutdown flowpath required by Specification 3.7.4.1.b provided at least one crosstie valve in the shutdown flowpath is closed and capable of being opened from the control room.

Limiting Condition for Operation 3.7.4.1.b ensures a shutdown cooling flow path from Unit 2 is maintained available for Unit 1. The available shutdown cooling flow path is necessary to support Unit 1 in the event of a complete loss of ESW in Unit 1 or a 10 CFR 50 Appendix R fire. The available flowpath may have a closed crosstie valve(s) when required by Action b.1. Specification 4.7.4.1.d ensures a closed crosstie valve can be opened from the control room to support the shutdown flow path during a complete loss of ESW in Unit 1. For 10 CFR 50 Appendix R, it is assumed that the valve can be opened by local manual operation.

3/4.7.3 and 3/4.7.4

The OPERABILITY of the Unit 2 flowpaths which support Unit 1 shutdown functions ensures the availability of cooling functions on Unit 1 and addresses the requirements of 10 CFR 50 Appendix R. The required flowpath consists of a pump and associated water supplies and delivery systems. Fire watches posted in the affected opposite unit areas (i.e., Unit 1 areas requiring use of the Unit 2 component cooling water system in the event of a fire) may serve as the equivalent shutdown capability specified in the action statement of Specification 3.7.3.1. In the affected areas, either establish continuous fire watches or verify the OPERABILITY of fire detectors per Specification 4.3.3.7 and establish hourly fire watch patrols. The required opposite unit equipment along with the surveillance requirements necessary to ensure that this equipment is capable of fulfilling its intended Appendix R alternate safe shutdown function have been established and are included in a plant procedure. An additional plant procedure details how the above noted fire watches will be implemented.

ATTACHMENT 4 TO C0800-03

NO SIGNIFICANT HAZARDS CONSIDERATION EVALUATION

Indiana Michigan Power Company (I&M) has evaluated this proposed amendment and determined that it does not involve a significant hazard. According to 10 CFR 50.92(c), a proposed amendment to an operating license does not involve a significant hazard if operation of the facility in accordance with the proposed amendment would not:

1. involve a significant increase in the probability of occurrence or consequences of an accident previously evaluated;

2. create the possibility of a new or different kind of accident from any previously evaluated; or

3. involve a significant reduction in a margin of safety.

I&M proposes to change Technical Specification (T/S) 3/4.7.4, "Essential Service Water [ESW] System," and the associated Bases to add requirements that would apply when the ESW system is cross-connected to the opposite unit. I&M also proposes to delete a provision for a 60-day allowed outage time when an ESW flowpath is not available to support the opposite unit's shutdown functions. Administrative and editorial changes are also made to provide consistency between units, correct typographical errors, improve readability, and improve page layout.

The determination that the criteria set forth in 10 CFR 50.92 are met for this amendment request is indicated below.

1. Does the change involve a significant increase in the probability of occurrence or consequences of an accident previously evaluated?

The accidents previously evaluated in Chapter 14 of the Updated Final Safety Analysis Report (UFSAR) that are affected by operation of the essential service water system are:

1. Loss-of-Coolant Accident (LOCA),
2. Main Steam Line Break,
3. Feedwater Line Break,
4. Loss of Feedwater,
5. Combinations of the above accidents with loss of offsite power,
6. Appendix R fire, and
7. Flooding.

The closing of an ESW unit crosstie valve to isolate an operating ESW pump from an inoperable loop will not increase the probability of occurrence of the affected accidents. Closing these valves will not affect the initiators of any previously analyzed accidents. It prevents flow in an

operating loop from being reduced below design basis by flow diversion to an inoperable loop. This action will not affect the initiating frequency of any LOCAs, main steam line or feedwater line breaks, or loss of feedwater events, nor will it cause or increase the frequency of an Appendix R fire.

With respect to flooding, closing the ESW unit crosstie valves may reduce the extent of flooding should a break occur in the ESW system. It does not contribute to the probability of an ESW system pipe break occurring. Therefore, closing the unit crosstie valve(s) as directed by the revised T/S requirements is a conservative change relative to flooding.

Closing an ESW unit crosstie valve to isolate an operating ESW pump from an inoperable loop will not increase the consequences of any accident previously evaluated in the UFSAR. This configuration does not prevent the ESW system from meeting its design basis flow requirements because these flows are set with the crosstie valves closed.

As long as the ESW design basis flow requirements are met, this proposed change is bounded by the current analysis of record with respect to consequences. No new release paths are created and the frequency of release is not increased by closing the unit crosstie valve when required by the revised requirements. Preventing the diversion of flow from an operating to an inoperable loop will reduce the probability of equipment malfunction that could lead to an increase in the consequences of an accident. Loss of offsite power in conjunction with any of the affected accidents will not be impacted by closure of the crosstie valve(s) because the valves receive emergency power.

The change to delete the additional 60-day allowed outage time (AOT) of the shutdown flowpath to the opposite unit is a conservative change that only increases the availability of the shutdown flowpath.

The change to add T/S 4.0.5 to the Unit 2 surveillance is a conservative change that corrects an editorial oversight. Surveillance testing under T/S 4.0.5 has been previously evaluated and approved.

The remaining changes are administrative in nature and are not intended to change the meaning of the T/S or associated Bases.

Therefore, these changes cannot increase the consequences or probability of occurrence of an accident previously evaluated.

2. Does the change create the possibility of a new or different kind of accident from any accident previously evaluated?

Closing an ESW unit crosstie valve to isolate an operating ESW pump from an inoperable loop will not create the possibility of an accident of a new or different type than any previously evaluated. Operation with closed crosstie valves is not the normal operating lineup but it is not precluded and applicable procedures recognize they may be closed. Therefore, no system/component interfaces are affected, nor are new ones created that would contribute toward a new or different accident. As described in question 1 above, operation with closed crosstie valves is bounded by the current analysis for affected accidents, even if these are combined with a loss of offsite power. Other single failures in conjunction with this change, such as the loss of one train of emergency diesel generators on one unit, will not create an accident that is not bounded by the current analysis of record.

The change to delete the additional 60-day AOT of the shutdown flowpath to the opposite unit is a conservative change that only increases the availability of the shutdown flowpath.

The change to add T/S 4.0.5 to the Unit 2 surveillance is a conservative change that corrects an editorial oversight. Surveillance testing under T/S 4.0.5 has been previously evaluated and approved and is included in the Unit 1 surveillance requirements.

The remaining changes are administrative/editorial in nature and are not intended to change the meaning of the T/S or associated Bases.

Therefore, this proposed change does not increase the possibility of a new or different kind of accident than previously evaluated.

3. Does the change involve a significant reduction in a margin of safety?

Closing an ESW unit crosstie valve to isolate an operating ESW pump from an inoperable loop ensures the single-failure design of the ESW system will be maintained. In this manner, the system will continue to perform its required function and ensure that margins of safety is maintained.

The change to delete the additional 60-day AOT of the shutdown flowpath to the opposite unit is a conservative change that assures the availability of the shutdown flowpath.

The change to add T/S 4.0.5 to the Unit 2 surveillance is a conservative change that corrects an editorial oversight. Surveillance testing under T/S 4.0.5 has been previously evaluated and approved and is included in the Unit 1 surveillance requirements.

The remaining changes are administrative in nature and are not intended to change the meaning of the T/S or associated Bases.

Therefore, these changes do not involve a significant reduction in the margin of safety.

In summary, based upon the above evaluation, I&M has concluded that these changes involve no significant hazards consideration.

ATTACHMENT 5 TO C0800-03

ENVIRONMENTAL ASSESSMENT

Indiana Michigan Power Company has evaluated this license amendment request against the criteria for identification of licensing and regulatory actions requiring environmental assessment in accordance with 10 CFR 51.21. I&M has determined that this license amendment request meets the criteria for a categorical exclusion set forth in 10 CFR 51.22(c)(9). This determination is based on the fact that this change is being proposed as an amendment to a license issued pursuant to 10 CFR 50 that changes a requirement with respect to installation or use of a facility component located within the restricted area, as defined in 10 CFR 20, or that changes an inspection or a surveillance requirement, and the amendment meets the following specific criteria.

(i) The amendment involves no significant hazards consideration.

As demonstrated in Attachment 4, this proposed amendment does not involve significant hazards consideration.

(ii) There is no significant change in the types or significant increase in the amounts of any effluent that may be released offsite.

The proposed amendment involves a revision to the Technical Specifications affecting requirements for the essential service water (ESW) system. The ESW system may interface directly with radioactive systems via the containment spray heat exchangers and indirectly via the component cooling water system. These are known and previously evaluated interfaces that are not directly or indirectly impacted by the revision. The proposed revision does not result in the generation of any additional radioactive or nonradioactive effluents. Therefore, there is no significant change in the types or significant increase in the amounts of any effluents released offsite.

(iii) There is no significant increase in individual or cumulative occupational radiation exposure.

The proposed changes may result in additional use of the ESW crosstie valves during normal operation. However, these valves are remotely operated from the control room and the increase in the operation of the valves due to the proposed changes are small in comparison to current operation for routine surveillance and maintenance. Therefore, there is no significant increase in individual or cumulative occupational radiation exposure resulting from this change.