9801290037

AMETEC APERTURE CARD

D-30

9801290037

ALL DIMENSIONS ARE SHOWN IN MILLIMETERS UNLESS OTHERWISE NOTED

GRAPHIC SCALE 1 : 20

0 200 400 800 1200 1600 mm

REV	DESCRIPTION	DATE	DRAN.	CHKD.	APD.	MFR.	K.S.C.	O.R.	D.M.
00	ISSUED FOR DOE DELIV FY97 RP120WE	5.14.97			N/A	RSS	N/A		

APPROVALS	INITIAL/DATE
DESIGN W COLLIEN	
ORIGINATOR W TAYLOR	
CHECKER J HILTON	
VERIFICATION N/A	
LEAD DESIGN ENGINEER R SAUNDERS	
QUALITY ASSURANCE N/A	
OPERATIONS MANAGER K BATTACHARYYA	

U.S. DEPARTMENT OF ENERGY
Yucca Mountain Site Characterization Project
M&O Civilian Radioactive Waste Management System
MANAGEMENT & OPERATING CONTRACTOR

REPOSITORY DESIGN

EMPLACEMENT DRIFT CONCRETE INVERT PLAN, ELEV, SECT

SIZE D | DOCUMENT IDENTIFIER: BBDC00000-01717-2700-82002 | REV 00

SCALE AS NOTED | DA N/A | CAD FILE 1.2.4 | CAD FILE RISTRUSS:82002

RECORD DESIGNATOR DA: N/A

/rebt/rep04/ertu/ogn/82002.ogn

NOTES:

1. THIS DRAWING DEPICTS PRELIMINARY DESIGN AND IS PRESENTED FOR INFORMATION ONLY. THE INFORMATION IS NOT INTENDED FOR PROCUREMENT, FABRICATION OR CONSTRUCTION.
2. PRECAST CONCRETE INVERT SEGMENTS WILL BE STEEL REINFORCED. STEEL REINFORCEMENT WILL BE REQUIRED FOR TENSILE STRESSES DEVELOPED DURING CONSTRUCTION HANDLING.
3. THE CONCRETE INVERT WILL BE PRECAST IN SEGMENTS.
4. THE DESIGN CONFIGURATIONS SHOWN DEPICT TWO SIZES OF PRECAST INVERT WITH THE ALTERNATE BEING THE SMALLER WITH LESS SUSPENDED ARC AND LOWER GANTRY RAIL.
5. SEE EMPLACEMENT DRIFT INVERT STRUCTURAL DESIGN ANALYSIS, CRWMS/M&O DOC. NO. BBDC00000-01717-0200-00001, REV 00.

REFERENCE:
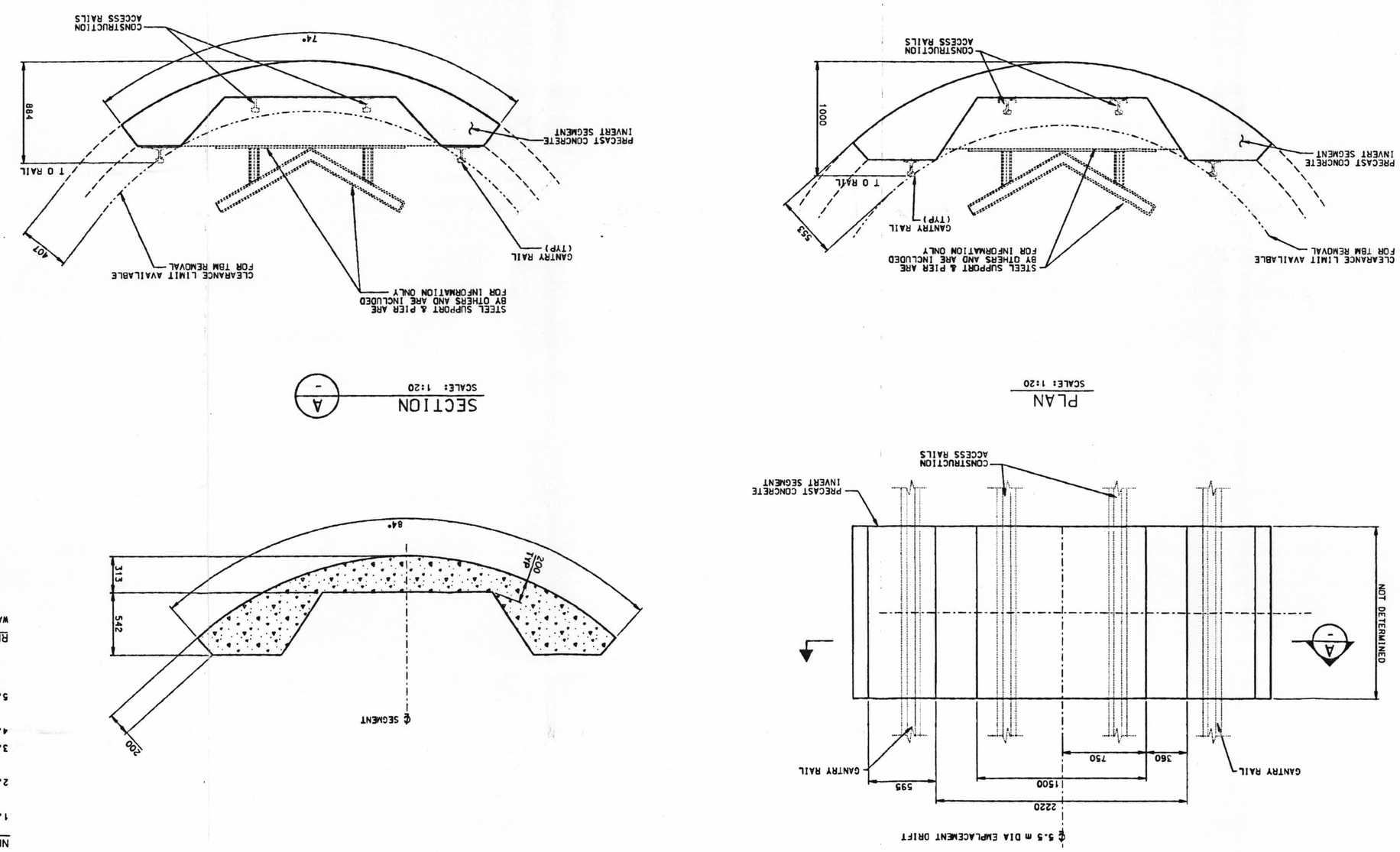
WASTE PACKAGE SUPPORT LAYOUT - SK0004 REV 04
IOC LV.MP.SNB.01/97-013-B