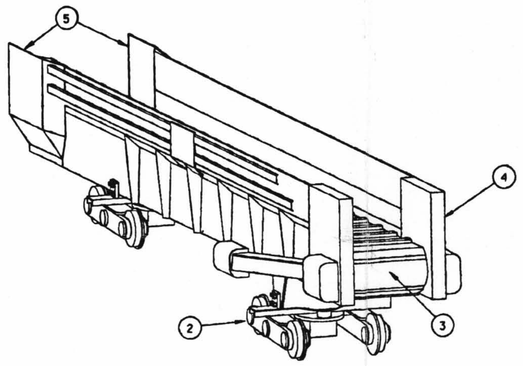

① MAIN HAULAGE SHUTTLECAR

① THE SHUTTLECAR CONCEPT IS BASED UPON THE ROCK-MACHINES SWEDEN AB SHUTTLECAR.™ MODEL 1158/C. THIS EQUIPMENT IS NOT SELF-PROPELLED AND IS EITHER TOWED OR PUSHED. (COUPLINGS ARE NOT SHOWN)

② THE SHUTTLECAR IS MOUNTED ON BOGIES WITH FLANGED, STEEL WHEELS FOR TRACK OPERATION. THE GAUGE OF THE WHEELS WILL BE SET TO MATCH THE TRACK GAUGE OF THE MAIN DRIFTS AND TURNOUTS.

③ BOTTOM-MOUNTED CONVEYOR IS PLACED IN THE STANDARD CAR BODY INCORPORATING DOUBLE CHAIN DRIVE FLIGHTS. (POWER UNIT FOR CONVEYOR IS NOT SHOWN)

④ CAR BODY IS INCLINED WITH THE FORWARD END RAISED ABOVE THE REAR END.

⑤ THE REAR END OF THE CAR IS FLARED TO RECEIVE THE FORWARD END OVERHANG OF ANOTHER SHUTTLECAR WHEN TWO SHUTTLECARS ARE COUPLED TOGETHER.

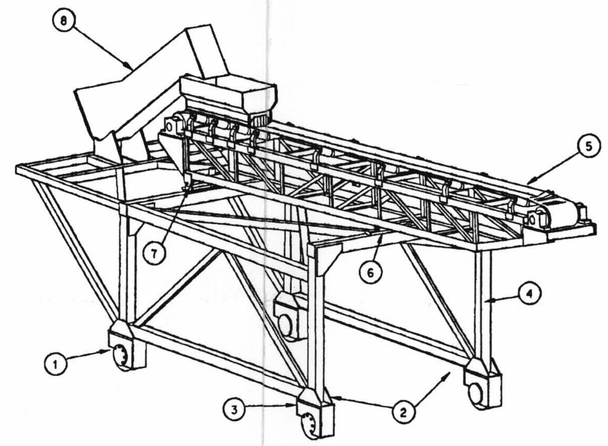

STOWER

① THE STOWER IS MOUNTED ON FLANGED, STEEL WHEELS FOR TRACK OPERATION.

② THE GAUGE OF THE WHEELS WILL BE SET TO MATCH THE TRACK GAUGE OF THE WASTE EMPLACEMENT DRIFT.

③ THIS EQUIPMENT IS SELF-PROPELLED. (POWER UNIT AND DRIVES ARE NOT SHOWN) COUPLING FOR ATTACHMENT TO A GANTRY SHUTTLECAR IS NOT SHOWN.

④ THE GANTRY FRAME IS SIZED TO CLEAR A 2.0 m DIAMETER WASTE PACKAGE.

⑤ A 0.46 m (18") WIDE CONVEYOR WITH SUPPORT IDLERS AND DRIVES (POWER UNIT AND DRIVES ARE NOT SHOWN) IS MOUNTED ON A TRUSS-FRAMED, CANTILEVERED STOWING BOOM.

⑥ THE STOWING BOOM IS ATTACHED TO ROLLERS (NOT SHOWN) NEAR THE MID-SECTION OF THE BOOM WHICH ARE GUIDED ACROSS THE FORWARD CROSS MEMBER OF THE GANTRY FRAME. THE DRAWING MECHANISM (POWER UNIT AND DRIVES ARE NOT SHOWN) WILL BE LOCATED ON THE INSIDE PORTION OF THE UPPER GANTRY FRAME.

⑦ THE REAR OF THE STOWING BOOM IS ATTACHED TO A FIXED SWIVEL WHICH ALLOWS THE FORWARD END OF THE BOOM TO SWING IN AN ARC.

⑧ MATERIAL FROM A GANTRY SHUTTLECAR IS DUMPED ONTO AN ELEVATING BELT FEEDER (POWER UNIT AND DRIVES ARE NOT SHOWN) WHICH DUMPS THE MATERIAL ONTO THE STOWING BOOM BELT CONVEYOR.

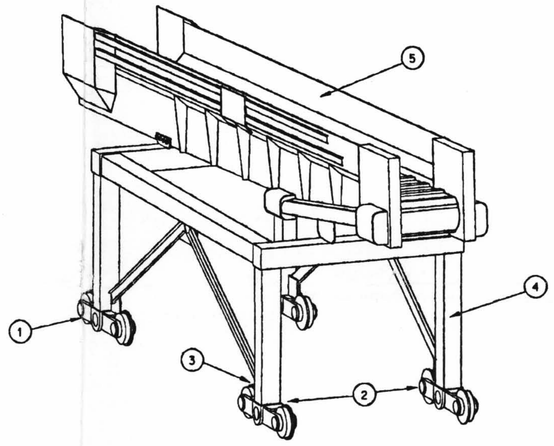

GANTRY SHUTTLECAR

① THE MOBILE BELT CONVEYOR UNIT IS MOUNTED ON WHEEL ASSEMBLIES WHICH INCLUDE FLANGED, STEEL WHEELS FOR TRACK OPERATION.

② THE GAUGE OF THE WHEELS WILL BE SET TO MATCH THE TRACK GAUGE OF THE WASTE EMPLACEMENT DRIFT.

③ THIS EQUIPMENT IS SELF-PROPELLED. (POWER UNITS AND DRIVES ARE NOT SHOWN) COUPLINGS FOR ATTACHMENT TO OTHER GANTRY SHUTTLECARS AND THE STOWER ARE NOT SHOWN.

④ THE GANTRY FRAME IS SIZED TO CLEAR A 2.0 m DIAMETER WASTE PACKAGE.

⑤ THE CAR BODY CONFORMS TO THE DESIGN OF THE MAIN HAULAGE SHUTTLECAR BODY.

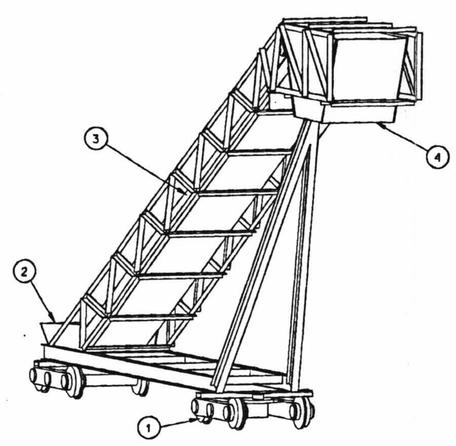

MOBILE BELT CONVEYOR UNIT

① THE MOBILE BELT CONVEYOR UNIT IS MOUNTED ON WHEEL ASSEMBLIES WHICH INCLUDE FLANGED, STEEL WHEELS FOR TRACK OPERATION. THE GAUGE OF THE WHEELS WILL BE SET TO MATCH THE TRACK GAUGE OF THE MAIN DRIFTS AND TURNOUTS.

② THE FEED HOPPER IS SET BELOW THE DISCHARGE HEIGHT OF THE MAIN HAULAGE SHUTTLECAR.

③ THE INCLINED CONVEYOR INCLUDES A CLEATED (FLIGHT) CONTINUOUS BELT AND POWER UNIT. (NOT SHOWN)

④ THE DISCHARGE CHUTE OF THE EQUIPMENT IS RAISED SO THAT THE REAR END OF A GANTRY SHUTTLECAR CAN BE POSITIONED BENEATH.

NOTES:

1. DRAWING IS NOT TO SCALE.
2. ALL INFORMATION SHOWN ON THIS DRAWING IS FOR REFERENCE PURPOSES ONLY AND IS NOT TO BE USED FOR CONSTRUCTION.
3. SEE DRAWING 81019 FOR DIAGRAM OF THE REPOSITORY GENERAL ARRANGEMENT.
4. SEE BACKFILL STRATEGY AND PRELIMINARY DESIGN ANALYSIS, CRWMS M&O DOC. NO. BCA00000-01717-0200-00006, REV 00.

ANSTEC APERTURE CARD

REV	DESCRIPTION	DATE	DRW	CHK	VER	L.D.E.	S.A.	D.M.
00	ISSUE FOR DOE DELIV FY97 RP120M3E	2/28/97	WG	[illegible]	[illegible]	N/A	RSS	N/A	KJ

APPROVALS	INITIAL/DATE
DRAWN: W GOLIEN	2-20-97
ORIGINATOR: P PIERCE	2/20/97
CHECKED: J PETERS	2/20/97
VERIFICATION: N/A	
LEAD DESIGN ENGINEER: R SAUNDERS	RSS 2/22/97
QUALITY ASSURANCE: N/A	
DEPARTMENT MANAGER: R BHATTACHARYYA	KJ 2/28/97

U.S. DEPARTMENT OF ENERGY
Yucca Mountain Site Characterization Project
M&O Civilian Radioactive Waste Management System MANAGEMENT & OPERATING CONTRACTOR

REPOSITORY DESIGN

BACKFILL EQUIPMENT

SIZE	DOCUMENT IDENTIFIER	DRAWING NO.	REV
D	BCAH00000-01717-2700-81021		00

SCALE: NONE | QA CLASSIFICATION: N/A | W.B.S.: 1.2.4 | CAD FILE: R1MINE-81021

CAGE CODE:

RECORD DESIGNATOR QA:N/A

/rep1/repsa/mine/dgn/81021.dgn

28-FEB-1997 11:00

9801290045

D-17