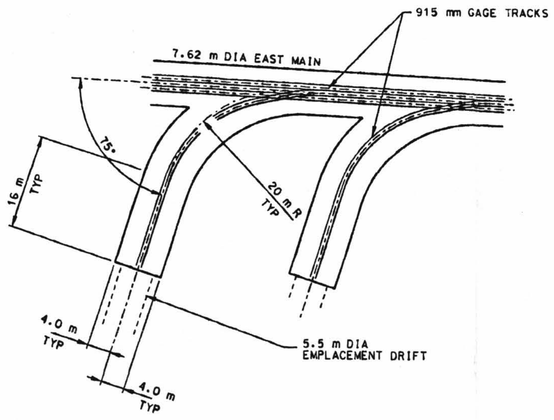

DETAIL 1 -
CONSTRUCTION/DEVELOPMENT MODES

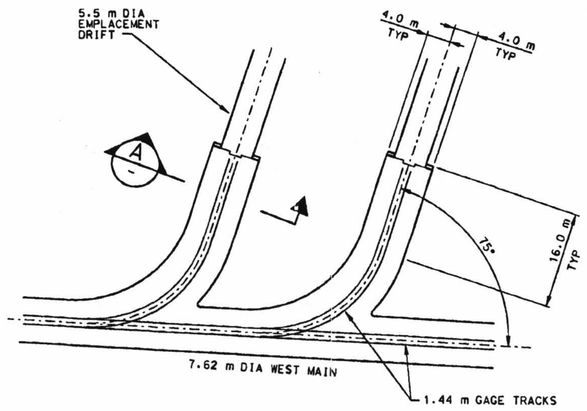

DETAIL 2 -
EMPLACEMENT MODE

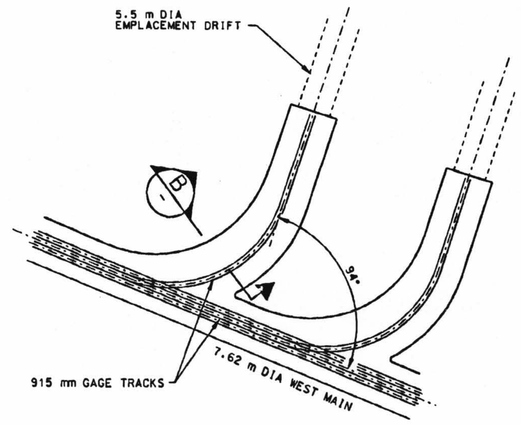

DETAIL 3 -
CONSTRUCTION/DEVELOPMENT MODES

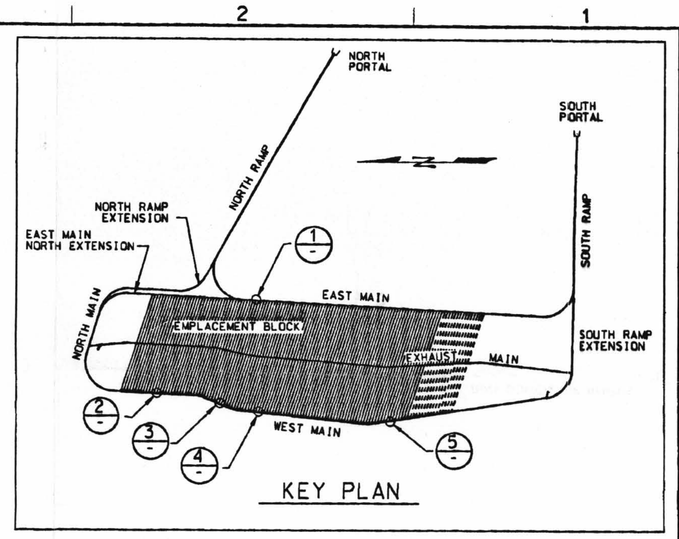

KEY PLAN

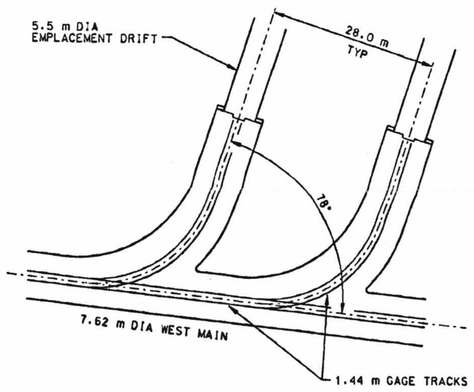

DETAIL 4 -
EMPLACEMENT MODE

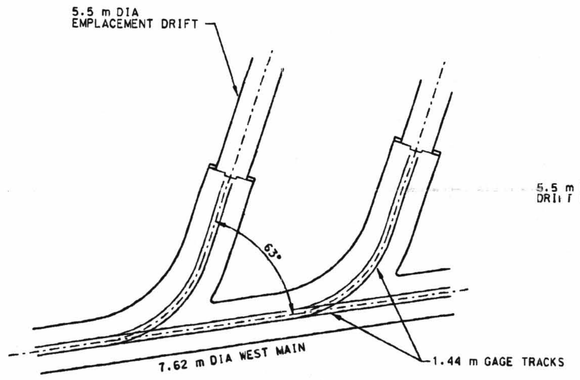

DETAIL 5 -
EMPLACEMENT MODE

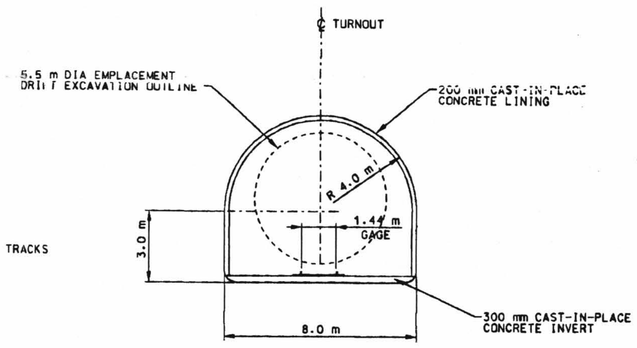

TYPICAL
SECTION A -

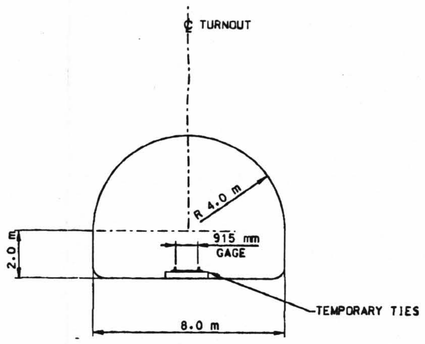

TYPICAL
SECTION B -

NOTES:

1. EXCAVATION RADII OF TURNOUT MAY BE DIFFERENT THAN CENTERLINE RADIUS TO ACCOMMODATE EQUIPMENT CLEARANCES.

ANSTEC APERTURE CARD

THIS DRAWING IS PRELIMINARY AND NOT INTENDED FOR CONSTRUCTION, PROCUREMENT OR FABRICATION.

DESIGN INPUTS
SEE DRAWING INPUTS LIST

REV	DESCRIPTION	DATE	DRN	CHK	VER	L.D.E.	D.A.	D.M.
00	INITIAL ISSUE	07/28/97	DGM	CRJ	JP	N/A	RSS	SD

APPROVALS	INITIAL/DATE
DRAWN W GOLIEN	DGM 7/28/97
ORIGINATOR C CORRELL	CRJ 07/28/97
CHECKED J PETERS	JP 7/28/97
VERIFICATION N/A	N/A
LEAD DESIGN ENGINEER R SAUNDERS	RSS 7/28/97
QUALITY ASSURANCE S DANA	SD 7/28/97
DEPARTMENT MANAGER K BHATTACHARYYA	KB 7/28/97

U.S. DEPARTMENT OF ENERGY
Yucca Mountain Site Characterization Project
M&O Civilian Radioactive Waste Management System MANAGEMENT & OPERATING CONTRACTOR

REPOSITORY DESIGN
EMPLACEMENT DRIFT
TURNOUTS
PLANS, SECTIONS

SIZE D | DOCUMENT IDENTIFIER: BCAA00000-01717-2700-81036-00 | REV
SCALE NONE | QA CLASSIFICATION 0 | W.B.S. 1.2.4 | CAD FILE R1MINE:81036
CAGE CODE:

9801280364

RECORD DESIGNATOR QA: L

9801280364

D-15

28-JUL-1997 11:13

MOL.19971024.0052

olsenj t:\repss\mine\dgn\81036.dgn