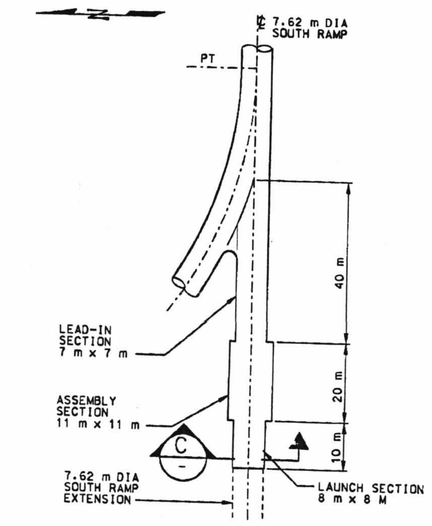

SOUTH RAMP EXTENSION
ASSEMBLY CHAMBER
DETAIL 1 / 81024
SCALE: NONE

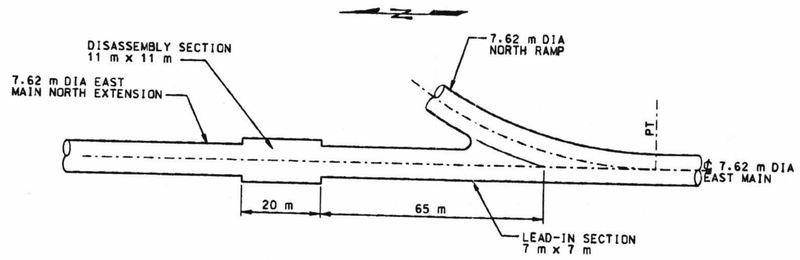

EAST MAIN NORTH EXTENSION
DISASSEMBLY CHAMBER
DETAIL 3 / 81024
SCALE: NONE

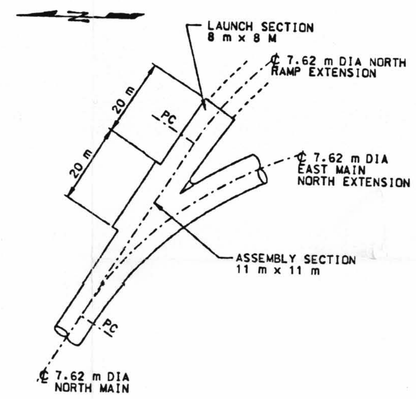

NORTH RAMP EXTENSION
ASSEMBLY CHAMBER
DETAIL 6 / 81024
SCALE: NONE

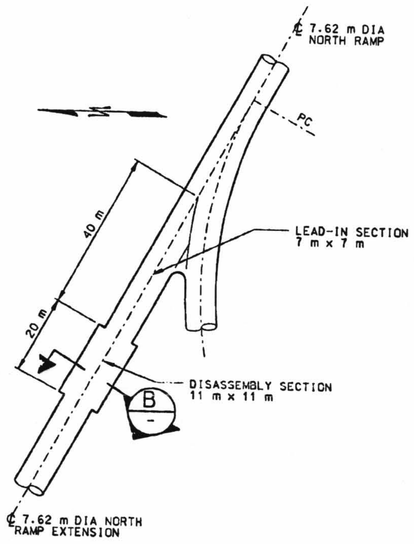

NORTH RAMP EXTENSION
DISASSEMBLY CHAMBER
DETAIL 4 / 81024
SCALE: NONE

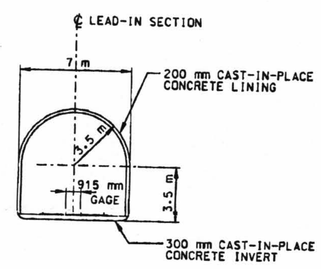

SECTION TYPICAL A / -

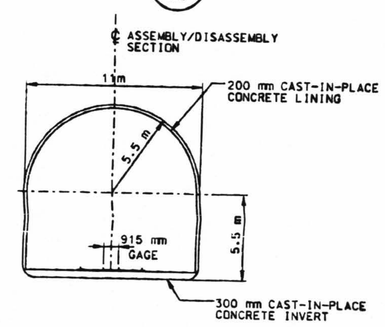

SECTION TYPICAL B / -

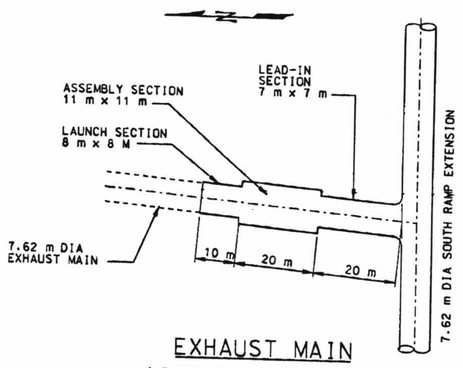

EXHAUST MAIN
ASSEMBLY CHAMBER
DETAIL 2 / 81024
SCALE: NONE

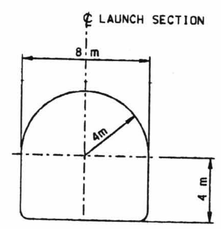

SECTION TYPICAL C / -

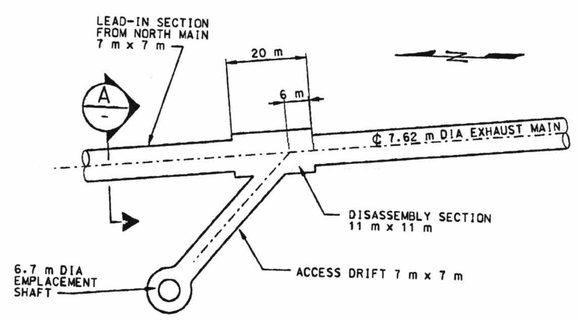

EXHAUST MAIN
DISASSEMBLY CHAMBER
DETAIL 5 / 81024
SCALE: NONE

ANSTEC APERTURE CARD

THIS DRAWING IS PRELIMINARY AND NOT INTENDED FOR CONSTRUCTION, PROCUREMENT OR FABRICATION.

DESIGN INPUTS
SEE DRAWING INPUTS LIST

APPROVALS	INITIAL/DATE
DRAWN D TRUJILLO	7/24/97
ORIGINATOR C GORRELL	07/24/97
CHECKED J PETERS	7/24/97
VERIFICATION N/A	N/A
LEAD DESIGN ENGINEER R SAUNDERS	RSS 7/24/97
QUALITY ASSURANCE S DANA	7/24/97
DEPARTMENT MANAGER K BHATTACHARYYA	7/25/97

U.S. DEPARTMENT OF ENERGY
Yucca Mountain Site Characterization Project
M&O Civilian Radioactive Waste Management System MANAGEMENT & OPERATING CONTRACTOR

REPOSITORY DESIGN
7.62 m TBM ASSEMBLY AND DISASSEMBLY CHAMBERS PLANS, SECTIONS

SIZE	DOCUMENT IDENTIFIER	DRAWING NO.	REV
D	BCAA00000-01717-2700-81033-00		00

SCALE	QA CLASSIFICATION	W.B.S.	CAD FILE
NONE	Q	1.2.4	R1MINE:81033

CADE CODE:

REV	DESCRIPTION	DATE	DRN	CKD	DES	CHK	VER	L.D.E.	Q.A.	D.M.
00	INITIAL ISSUE	07/28/97	DKM	CGG	VLA	N/A	RSS	SD	KB	

olsenj t:\r\pass\mine\dgn\81033.dgn

RECORD DESIGNATOR QA: L
9801280357 (D-12)

28-JUL-1997 11:10 RDM-1997102600.0049