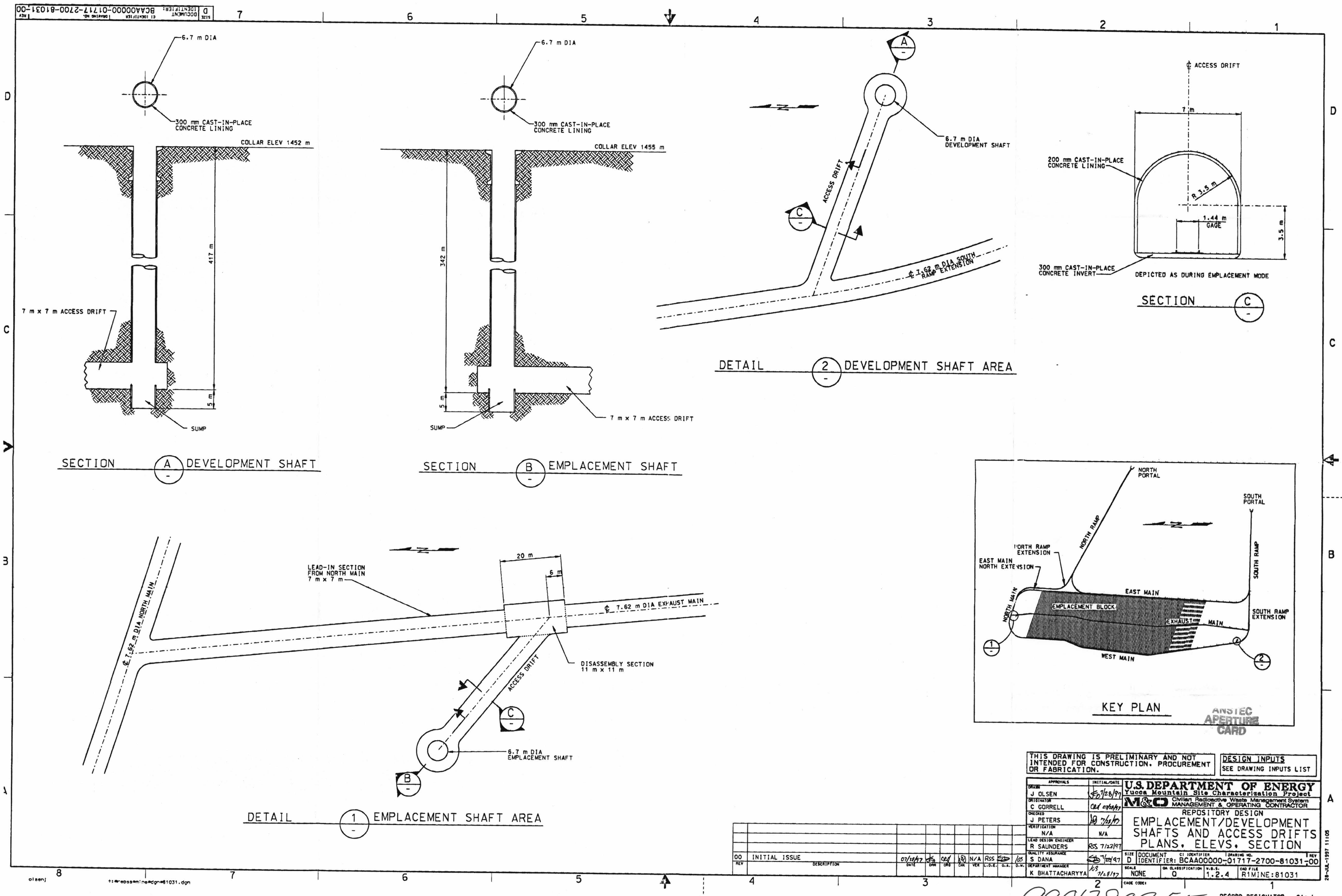

ANSTEC APERTURE CARD

THIS DRAWING IS PRELIMINARY AND NOT INTENDED FOR CONSTRUCTION, PROCUREMENT OR FABRICATION.

DESIGN INPUTS
SEE DRAWING INPUTS LIST

APPROVALS	INITIAL/DATE
DRAWN J OLSEN	7/28/97
ORIGINATOR C GORRELL	07/28/97
CHECKED J PETERS	7/28/97
VERIFICATION N/A	N/A
LEAD DESIGN ENGINEER R SAUNDERS	RSS 7/23/97
QUALITY ASSURANCE S DANA	7/29/97
DEPARTMENT MANAGER K BHATTACHARYYA	7/28/97

U.S. DEPARTMENT OF ENERGY
Yucca Mountain Site Characterization Project
M&O Civilian Radioactive Waste Management System MANAGEMENT & OPERATING CONTRACTOR

REPOSITORY DESIGN
EMPLACEMENT/DEVELOPMENT SHAFTS AND ACCESS DRIFTS PLANS, ELEVS, SECTION

SIZE	DOCUMENT IDENTIFIER	CI IDENTIFIER	DRAWING NO.	REV
D	BCAA00000	01717-2700-81031		00

SCALE	QA CLASSIFICATION	V.B.S.	CAD FILE
NONE	Q	1.2.4	R1MINE:81031

CAGE CODE:

REV	DESCRIPTION	DATE	DRN	CHK	VER	L.D.E.	Q.A.	D.M.
00	INITIAL ISSUE	07/28/97			N/A	RSS		

RECORD DESIGNATOR QA: L

9801280355

9801280355 D-10

28-JUL-1997 11:05

olsenj t:\repss\mine\dgn\81031.dgn