August 9, 2000

MEMORANDUM TO: File

FROM: David H. Jaffe, Senior Project Manager
Project Directorate IV-1
DLPM/NRR

SUBJECT: Conference Call with Entergy Operations, Inc.

On August 4, 2000, Jay Lee and D. H. Jaffe held a conference call with the River Bend Station (RBS) licensee to discuss the effect of the proposed 5% power uprate on offsite and control room, post accident, radiation doses. Enclosure 1 was the agenda for the conference call. The licensee provide Enclosure 2 to assist in the conference call. Enclosure 3 was prepared following the conference call and was received on August 8, 2000.

Docket No. 50-458

Enclosures: As stated

Enclosure 1

River Bend Discussion Items

(1) License Amendment Request (99-15), "Changes to Technical specifications for Power Uprate of River Bend station".

In Section 9.2, "Design Basis Accidents," of Enclosure 7 (Reference 1), you stated that plant-specific radiological analyses were performed at uprated conditions for bounding postulated accidents.

Provide the site boundaries (Exclusion Area Boundary and Low Population Zone) and the control room operator doses resulting from (1) the LOCA, (2) the fuel handling accident, and (3) the control rod drop accident, complete with the major parameters and assumptions used in the re-evaluation of the radiological consequences at uprated power.

Reference 1: GE Nuclear Energy, NEDC-32778P, "Safety Analysis Report for River Bend 5% Power Uprate", July 1999.

(2) License Amendment Request (2000-02), "Changes to Fuel Building and Fuel building Ventilation System Requirements."

In Attachment 4, you provided the current River Bend design basis LOCA dose analysis referencing the model you submitted to the NRC in the LAR 96-39. The staff issued Amendment No. 98 approving a part of LAR 96-39 request.. In your letter of July 31, 1997, you requested the deferral of review for the increase in the allowable MSIV leakage rate and deletion of the MS-PLCS.

Are your LOCA dose consequences provided in LAR 2000-02 based on with or without MS-PLCS leakage contribution?

How does LAR 2000-02 relate to LAR 99-15? What are the current River Bend licensing bases for the radiological consequences ?

Enclosure 2

THIS INFORMATION WAS PREPARE EXPLICITY FOR CALL ON 8/3/2000.

LOCA Doses

DRAFT - FOR INFO

File Legend:

- **CONTAIN.IN** - This file determines the dose consequences of air leakage from the primary and secondary containment buildings.
- **PVLCS** – This file determines the dose consequences due to the secondary containment bypass leakage term. This leakage is assumed to be released directly to the environment.
- **LIQUID.IN** – This file determines the dose consequences of liquid leakage of ESF systems into the auxiliary building.
- **IN91-56.IN** – This file models the gross failure of a passive component outside of secondary containment. This file is not impacted by secondary containment assumptions. Note that the power level previously assumed for this term was 3100 MWt so the impact of Power Uprate was already considered in the Amendment 111 submittal.

Calculation LOCA Doses for Power Uprate

	Thyroid	Whole Body	Skin
EAB			
• CONT_PU.OUT	4.014E+01	4.848E+00	
• PVLCS_PU.OUT	1.956E+01	4.893E-01	
• LIQ_PU.OUT	2.092E+01	8.546E-02	
• CASE50A.OUT	0.000E+00	0.000E+00	Note 1
Total	**80.6**	**5.4**	
Pre-Uprate Dose	*37.8*	*4.6*	
Regulatory Limit	***300.0***	***25.0***	
LPZ			
• CONT_PU.OUT	1.276E+01	2.708E+00	
• PVLCS_PU.OUT	3.804E+01	1.871E-01	
• LIQ_PU.OUT	6.867E+00	1.406E-02	
• CASE50A.OUT	6.394E+01	4.260E-02	Note 1
Total	**121.6**	**2.95**	
Pre-Uprate Dose	*115.1*	*2.81*	
Regulatory Limit	***300.0***	***25.0***	
Control Room			
• CONT_PU.OUT	2.872E+00	4.003E-01	8.380E+00
• PVLCS_PU.OUT	3.067E+00	5.834E-02	1.147E+00
• LIQ_PU.OUT	6.645E-01	9.845E-05	7.302E-04
• CASE50A.OUT	4.168E-01	1.038E-04	1.309E-04
Total	**7.02**	**0.46**	**9.53**
Pre-Uprate Dose	*6.33*	*0.42*	*8.82*
Regulatory Limit	***30.0***	***5.0***	***30.0***

Note 1: Skin dose calculations are not required for off-site, therefore, they are not included here.
Note 2: Doses taken from calculation G13.18.9.5*051-1A

Primary Changes in Assumptions for Power Uprate:

1. **Power Level:** The pre-uprate analysis assumed 3039 MWt which is 105% of the current licensed power level of 2894 MWt. The Power Uprate analysis assumed 3100 MWt which is the uprated power level (3039 MWt) with an additional 2% to account for instrument uncertainty in accordance with RG 1.78.
2. **Positive Pressure Period (PPP):** A PPP of 700 seconds was assumed for the power uprate LOCA dose analysis. Specifically, secondary containment was not credited for the Annulus from 24 to 724

NOT VERIFIED

There are three FHA cases evaluated for RBS. The first is the original design basis analysis which assumed an FHA occurs in the fuel building 24 hours after shutdown. The second evaluation was prepared to support Amendment 35 to the technical specifications. This analysis assumes that a FHA occurs in containment 80 hours after shutdown. The third analysis was prepared to support Amendment 85 to the technical specifications which allowed the containment personnel air locks to be opened during fuel movement. All three analyses were re-submitted to the NRC via LAR 99-29 in December, 1999. The NRC issued Amendment 110 to the RBS TS on March 3, 2000 approving the revised calculations.

As discussed in LAR 99-29, there were two major changes in FHA assumptions in the Power Uprate analysis. First, the source term was based on a power level of 3100 MWt which is 102% of the proposed core thermal power level. The second change was independent of Power Uprate. Specifically, RBS has determined that the maximum possible number of fuel rods damaged due to a postulated drop is 122 GE 9x9 rods. However, to conservatively bound future fuel designs the FHA analyses conservatively assumed that 150 rods were damaged. This is discussed in depth in LAR 99-29.

The resulting doses and assumptions are found in LAR 1999-29.

NOT VERIFIED

DRAFT - FOR INFO

seconds consistent with GE Task Report 31.2 assumptions. The auxiliary building and fuel building are not credited from 0 – 724 seconds. Note that RBS has since performed a GOTHIC analysis which indicates that the actual PPP using power uprated assumptions is <450 seconds.

CRDA

Dose (REM)	Case 1	Case 2	Current USAR Value
EAB			
• Whole Body	7.036E-01	7.715E-02	9.900E-01
• Thyroid	5.447E+00	1.280E+00	7.800E+00
LPZ			
• Whole Body	2.163E-01	2.396E-02	4.300E-01
• Thyroid	4.506E+00	1.068E+00	5.900E+00
Control Room			
• Whole Body	7.637E-02	8.203E-03	4.900E-01
• Skin	1.339E+00	1.465E-01	7.900E+00
• Thyroid	5.505E-01	1.305E-01	3.300E+00

Case 1: Assumed all 850 GE 8x8 fuel rods melted resulting in release of 50% of the halogens and 100% of the Noble Gases. This is consistent with the current analysis documented in the USAR.
Case 2: Assumed 0.77% of the fuel rods melted consistent with GESTAR II assumptions. The remaining fuel rods are assumed to only experience classing failure with the release of the gap activity (12% I-131, 10% remaining halogens, 30% for Kr-85, 10% remaining NG).

The following are the changes in assumptions:

- **Power Level:** A power level of 3100 MWt was assumed which is 102% of the Power Uprate power level.
- **Dose Conversion Factors:** The previous analysis used ICRP2 DCF. The Power Uprate analysis used ICRP30 DCFs.
- **Control Room Ventilation Model:** The revised analysis uses the current MCR ventilation model (~2000 cfm filtered intake & 2000 cfm filtered recirc.). The previous analysis used the previous model (4000 cfm filtered intake, no filtered recirculation). The model used is consistent with the current FHA and LOCA Main Control Room ventilation model.

FHA

There are three FHA cases evaluated for RBS. The first is the original design basis analysis which assumed an FHA occurs in the fuel building 24 hours after shutdown. The second evaluation was prepared to support Amendment 35 to the technical specifications. This analysis assumes that a FHA occurs in containment 80 hours after shutdown. The third analysis was prepared to support Amendment 85 to the technical specifications which allowed the containment personnel air locks to be opened during fuel movement. All three analyses were re-submitted to the NRC via LAR 99-29 in December, 1999. The NRC issued Amendment 110 to the RBS TS on March 3, 2000 approving the revised calculations.

As discussed in LAR 99-29, there were two major changes in FHA assumptions in the Power Uprate analysis. First, the source term was based on a power level of 3100 MWt which is 102% of the proposed core thermal power level. The second change was independent of Power Uprate. Specifically, RBS has determined that the maximum possible number of fuel rods damaged due to a postulated drop is 122 GE 9x9 rods. However, to conservatively bound future fuel designs the FHA analyses conservatively assumed that 150 rods were damaged. This is discussed in depth in LAR 99-29.

The resulting doses and assumptions are found in LAR 1999-29.

NOT VERIFIED

From LAR 1999-29 Amend 110 Page 1 of 2

To: David Jaffe

Table 1

FHA Input Assumptions

Parameter	Case I	Case II (Amendment 35)	Case III (Amendment 85)
Building	Fuel Building	Containment	Containment
Core Power Level[1]	3100 MWt	3100 MWt	3100 MWt
Number of Pins per Bundle	74	74	74
Number of Bundles in Core	624	624	624
Decay Time	24 hr.	80 hr.	11 days
Number of Damaged Pins	150 GE9x9	150 GE9x9	150 GE9x9
Release Rate[2]	Puff Release	87.4 vol %/day	6000 vol %/day
Building Filter Efficiency	99%	0%	0%
Pool Decontamination Factor			
Halogens	100	100	100
Noble Gases	1	1	1
Off-Site Atmospheric Dispersion Factors [χ/Q] (s/m³)			
EAB			
0 – 2 hours	8.58E-04	8.58E-04	8.58E-04
LPZ			
0 – 8 hours	1.13E-04	1.13E-04	1.13E-04
8 – 24 hours	7.89E-05	7.89E-05	7.89E-05
1 – 4 days	3.65E-05	3.65E-05	3.65E-05
4 – 30 days	1.21E-05	1.21E-05	1.21E-05
Control Room χ/Q (s/m³)[3]			
0 – 8 hours	1.62E-03	1.62E-03	1.62E-03
8 – 24 hours	1.20E-03	1.20E-03	1.20E-03
1 – 4 days	4.05E-04	4.05E-04	4.05E-04
4 – 30 days	6.48E-05	6.48E-05	6.48E-05
Gap Fractions			
Kr-85	0.30	0.30	0.30
All Other Noble Gases	0.10	0.10	0.10
I-131	0.12	0.12	0.12
All Other Halogens	0.10	0.10	0.10

Note 1: The assumed power level corresponds to a Power Uprated core thermal power level of 3039 MWt. An instrument uncertainty of 2% is assumed in accordance with Regulatory Guide 1.78 for a total core power level of 1.02x3039=3100 MWt. The current licensed power level is 2894 MWt.

Note 2: Case I represents the most conservative assumption in that all activity is instantaneously released to the environment. The Case II leakage rate corresponds to L_a (0.25 vol % per day) + 70.2 cfm and accounting for only 10% mixing (per the Amendment 35 SER). The Case III release rate used ensures that the Regulatory Guide 1.25 two hour release duration is met.

Note 3: The power uprate FHA analyses assumes an "operator action" at 20 minutes for Control Room personnel to manually select the most favorable air intake. Therefore, the χ/Q values presented in the Table are divided by four, beginning 20 minutes into the event, as allowed per SRP Section 6.4.

Table 2

Power Uprate Analyses - Summary of Results

Case I

Dose (REM)	Current USAR (Table 15.7-13)	Power Uprate Analysis	Regulatory Limits
EAB			
• Whole Body	0.3	0.5	6
• Thyroid	1.1	1.9	75
LPZ			
• Whole Body	0.1	0.1	6
• Thyroid	0.2	0.3	75
Main Control Room			
• Whole Body	0.1	0.1	5
• Skin	1.0	1.7	30
• Thyroid	2.0	3.3	30

Case II

Dose (REM)	Current USAR (Table 15.7-18)	Power Uprate Analysis	Regulatory Limits
EAB			
• Whole Body	0.1	0.1	6
• Thyroid	7.8	9.3	75
LPZ			
• Whole Body	0.1	0.1	6
• Thyroid	6.3	7.5	75
Main Control Room			
• Whole Body	0.1	0.1	5
• Skin	0.2	0.2	30
• Thyroid	0.3	0.4	30

Case III

Dose (REM)	Current USAR (Table 15.7-20)	Power Uprate Analysis	Regulatory Limits
EAB			
• Whole Body	0.1	0.2	6
• Thyroid	36*	67	75
LPZ			
• Whole Body	0.1	0.1	6
• Thyroid	7.2	8.8	75
Main Control Room			
• Whole Body	0.1	0.1	5
• Skin	0.2	0.4	30
• Thyroid	0.8	3.6	30

* Value of 46.6 REM thyroid originally reported in Reference 4 and approved in Reference 5.

Enclosure 3

*LOCA Dose Calculation (G13.18.9.5*051) Revision History*

The purpose of this write-up is to explain the changes in the RBS LOCA dose calculation since it was initially submitted to the NRC via LAR 96-39. While the revision history is discussed below, Table 2 provides a quantitative list of the changes.

LAR 96-39: Revision 0

Revision 0 to calculation G13.18.9.5*051 was initially prepared to support LAR 96-39. That LAR requested several items: (1) removal of the MS-PLCS system, (2) removal of the PVLCS system, and (3) relaxation of the allowable MSIV leakage rates.

LAR 96-39 Revision/Amendment 98: Addenda 0A

River Bend revised LAR 96-39 such that removal of only the PVLCS system was requested. Removal of the MS-PLCS system and changing the MSIV allowable leakage rate would be pursued at a later date. An addenda to the dose calculation was prepared to determine the dose consequences assuming that the MS-PLCS system remained operational. This analysis was consistent with what the NRC approved via Amendment 98 to the Technical Specifications.

Suppression Pool Volume Change: Addenda 0B

A site Condition Report documented the fact that the calculated suppression pool volume was non-conservative in that it did not take into account submerged objects. An addenda was prepared to determine the ESF doses based on the revised suppression pool volume. Note that this resulted in only a minor change to calculated doses as it only impacted the liquid dose term by ~2%, therefore, further discussion is not warranted (i.e., it will not be included in further discussions).

Information Notice 88-76/Amendment 111: Revision 1 (Current Licensing Basis Analysis)

Site Condition Report (CR) 96-1916 documented the impact that differential temperatures have on the calculated positive pressure period (PPP) [see Information Notice 88-76]. Revision 1 re-evaluated the dose impact of the IN using the PVLCS methodology. As such, Rev. 1 used a 195.5 sec. PPP rather than the 189.0 sec. PPP used in revision 0.

Several enhancements to the calculation were also made in Revision 1.

1. Modeled only the PVLCS leakage path (i.e., incorporated Addenda 0A). MS-PLCS is assumed to be operational, therefore, no leakage through the MSIVs is assumed to be released to the environment (as consistent with the Amendment 98 SER).
2. Revised the Suppression Pool Volume (i.e., incorporated Addenda 0B).
3. RBS re-reviewed Information Notice 91-56 and its applicability to River Bend Station. Specifically, it reviewed concerns with respect to liquid leakage potentially bypassing secondary containment. The paths explicitly evaluated were the RCIC/HPCS suction line, the HPCS test return line to the condensate storage tank (CST), and the RCIC test return line to the CST. Although it was determined that these specific leakage paths were outside of the current licensing basis, an additional water leakage term was included for conservatism.
4. In Revision 0, the ESF leakage file transferred 1 gpm to the auxiliary building. However, during the PPP this leakage should be directed to the environment since credit for secondary containment should not be taken while the auxiliary building is at a "positive" pressure.

Note that Revision 1 was ultimately submitted to the NRC via LAR 99-24 and was approved via Amendment 111. This revision to the calculation represents the "current" licensing basis analysis for RBS.

LAR 99-15 (Power Uprate): Addenda 1A

The purpose of this addenda is to determine the LOCA doses including the impact of Power Uprate. The two major changes due to Uprate are (1) an increased core thermal power (3100 MWt in lieu of 3039 MWt) and (2) an extended positive pressure period (24 to 724 seconds for annulus, 0 – 724 for the auxiliary and fuel buildings).

Parameter	Value
CR Ventilation Parameters • Ingress/egress • Intake (filtered) • Discharge • Recirculation (filtered)	 10 cfm 1947.6 cfm 1947.6+10=1957.6 cfm 1947.6 cfm
CR filter efficiency recirc (2" filter) intake (2-2" filters)	 99% 99%
CR filter actuation time	66 sec
Control Room χ/Q (Local Intake) – Containment Release 0-8 hrs. 8-24 hr. 24-96 hr. 96-720 hr.	 1.62×10^{-3} sec/m^3 1.20×10^{-3} sec/m^3 4.05×10^{-4} sec/m^3 6.48×10^{-5} sec/m^3
Limiting Control Room χ/Q values for secondary containment bypass (sec/m^3) 0-8 hr 8-24 hr 1-4 days 4-30 days	 4.04×10^{-3} 3.03×10^{-3} 9.29×10^{-4} 1.62×10^{-4}
Offsite Dispersion Factors (χ/Q) – Containment Release EAB 0-2 hr. LPZ 0-8 hr. 8-24 hr. 24-96 hr. 96-720 hr.	 8.58×10^{-4} sec/m^3 1.13×10^{-4} sec/m^3 7.89×10^{-5} sec/m^3 3.65×10^{-5} sec/m^3 1.21×10^{-5} sec/m^3
Limiting 0-2 hr EAB χ/Q value for secondary containment bypass (sec/m^3)	9.01×10^{-4}
Limiting LPZ χ/Q values for secondary containment bypass (sec/m^3) 0-8 hr 8-24 hr 1-4 days 4-30 days	 1.14×10^{-4} 8.00×10^{-5} 3.71×10^{-5} 1.23×10^{-5}
Breathing Rate (offsite) 0-8 hrs. 8-24 hrs. 24-720 hrs.	 3.47×10^{-4} m^3/sec 1.75×10^{-4} m^3/sec 2.32×10^{-4} m^3/sec
Breathing Rate (Control Room)	3.47×10^{-4}m^3/sec
Dose Conversion Factors	ICRP 30

Table 2
LOCA Input Assumptions – Variable

Parameter	LAR 96-39 MSPLCS&PVLCS G13.18.9.5*051-0	Amendment 98 PVLCS Only G13.18.9.5*051-0A	Amendment 111 LOCA Dose USQ G13.18.9.5*051-1	LAR 99-15 Power Uprate G13.18.9.5*051-1A	LAR 2000-02 Fuel Building G13.18.9.5*051-2
Power level	3039 MWt	3039 MWt	3039 MWt	3100 MWt	3100 MWt
MSIV Leakage Rate (One MSIV)	100 scfh	Not Considered	Not Considered	Not Considered	Not Considered
MSIV Total Leakage Rate (4 MSIVs)	200 scfh	Not Considered	Not Considered	Not Considered	Not Considered
Annulus bypass leakage • To Fuel Building • To Auxiliary Building • To Environment Total annulus bypass leakage	 6,750 cc/hr 6,750 cc/hr 0 cc/hr 13500 cc/hr	 6,750 cc/hr 6,750 cc/hr 0 cc/hr 13500 cc/hr	 6,750 cc/hr 6,750 cc/hr 0 cc/hr 13500 cc/hr	 6,750 cc/hr 6,750 cc/hr 0 cc/hr 13500 cc/hr	 0 cc/hr 0 cc/hr 13,500 cc/hr 13,500 cc/hr
Information Notice 91-56 Term • Flow Rate • Start Time • Duration	Not Considered	Not Considered	 50 gpm 24 hrs. 30 min.	 50 gpm 24 hrs. 30 min.	 50 gpm 24 hrs. 30 min.
Positive Pressure Period • Annulus Start Time (P > -0.25" w.g.) • Stop Time (P ≤ -0.25" w.g.) • Duration	 24 sec. 213 sec. 189 sec.	 24 sec. 213 sec. 189 sec.	 20.5 sec. 216 sec. 195.5 sec.	 24 sec. 724 sec. 700 sec.	 0 sec. 700 sec. 700 sec.
ESF Liquid Leakage Model (AB = Aux. Bldg.)	Held in AB during PPP, Processed by SGTS after PPP	Held in AB during PPP, Processed by SGTS after PPP	Release to Env. During PPP, Processed by SGTS after PPP	Release to Env. During PPP, Processed by SGTS after PPP	Release to Env. During PPP, Processed by SGTS after PPP
Suppression Pool Volume	124,726 ft^3	124,726 ft^3	120,000 ft^3	120,000 ft^3	120,000 ft^3

LOCA Computer Files' Descriptions

- **CONTAIN** - This file determines the dose consequences of air leakage from the primary and secondary containment buildings. Note that this file was "CASE1.IN" in Revision 0 to the calculation.
- **PVLCS** – This file determines the dose consequences due to the secondary containment bypass leakage term. This leakage is assumed to be released directly to the environment. Note that this file was "CASE1A.IN" in Revision 0 to the calculations and it included the MSIV leakage term (which was removed after NRC approval of Amendment 98).
- **LIQUID** – This file determines the dose consequences of liquid leakage of ESF systems into the auxiliary building.
- **IN91-56** – This file models the gross failure of a passive component outside of secondary containment. This file is not impacted by secondary containment assumptions. Note that the power level previously assumed for this term was 3100 MWt so the impact of Power Uprate was already considered in the Amendment 111 submittal.

Table 3 – Off-site LOCA Dose Results

Location	Dose	Contributor	LAR 96-39 MSPLCS&PVLCS G13.18.9.5*051-0	Amendment 98 PVLCS Only G13.18.9.5*051-0A	Amendment 111 LOCA Dose USQ G13.18.9.5*051-1	LAR 99-15 Power Uprate G13.18.9.5*051-1A	LAR 2000-02 Fuel Building G13.18.9.5*051-2
EAB	Whole Body	CONTAIN	4.116E+00	4.122E+00	4.127E+00	4.848E+00	4.910E+00
		PVLCS	5.661E-01	4.797E-01	4.797E-01	4.893E-01	4.893E-01
		LIQUID	3.288E-03	3.288E-03	2.398E-02	8.546E-02	8.546E-02
		IN91-56	N/A	N/A	0.000E+00	0.000E+00	0.000E+00
		Total	*4.69*	*4.60*	*4.63*	*5.42*	*5.48*
	Thyroid	CONTAIN	1.247E+01	1.247e+01	1.264E+01	4.014E+01	4.248E+01
		PVLCS	2.389E+01	1.918E+01	1.918E+01	1.956E+01	1.956E+01
		LIQUID	1.172E+00	1.172E+00	6.016E+00	2.092E+01	2.092E+01
		IN91-56	N/A	N/A	0.000E+00	0.000E+00	0.000E+00
		Total	*37.53*	*32.82*	*37.84*	*80.62*	*82.96*
LPZ	Whole Body	CONTAIN	2.572E+00	2.580E+00	2.581E+00	2.708E+00	2.718E+00
		PVLCS	2.406E-01	1.834E-01	1.834E-01	1.871E-01	1.871E-01
		LIQUID	3.085E-03	3.085E-03	5.913E-03	1.406E-02	1.406E-02
		IN91-56	N/A	N/A	4.260E-02	4.260E-02	4.260E-02
		Total	*2.82*	*2.77*	*2.81*	*2.95*	*2.96*
	Thyroid	CONTAIN	8.749E+00	8.977E+00	8.999E+00	1.276E+01	1.585E+01
		PVLCS	4.979E+01	3.730E+01	3.730E+01	3.804E+01	3.804E+01
		LIQUID	4.037E+00	4.037E+00	4.826E+00	6.867E+00	6.867E+00
		IN91-56	N/A	N/A	6.394E+01	6.394E+01	6.394E+01
		Total	*62.58*	*50.31*	*115.1*	*121.6*	*124.7*

Table 4 – Main Control Room LOCA Dose Results

Dose	Contributor	LAR 96-39 MSPLCS&PVLCS G13.18.9.5*051-0	Amendment 98 PVLCS Only G13.18.9.5*051-0A	Amendment 111 LOCA Dose USQ G13.18.9.5*051-1	LAR 99-15 Power Uprate G13.18.9.5*051-1A	LAR 2000-02 Fuel Building G13.18.9.5*051-2
Whole Body	CONTAIN	3.583E-01	3.593E-01	3.595E-01	4.003E-01	4.020E-01
	PVLCS	7.424E-02	5.719E-02	5.719E-02	5.834E-02	5.834E-02
	LIQUID	3.782E-06	3.782E-06	6.302E-05	9.845E-05	9.845E-05
	IN91-56	N/A	N/A	1.038E-05	1.038E-05	1.038E-05
	Total	*0.43*	*0.42*	*0.42*	*0.46*	*0.46*
Skin	CONTAIN	7.670E+00	7.693E+00	7.697E+00	8.380E+00	8.405E+00
	PVLCS	1.475E+00	1.122E+00	1.124E+00	1.147E+00	1.147E+00
	LIQUID	3.875E-05	3.875E-05	4.703E-04	7.302E-04	7.302E-04
	IN91-56	N/A	N/A	1.309E-04	1.309E-04	1.309E-04
	Total	*9.15*	*8.82*	*8.82*	*9.53*	*9.55*
Thyroid	CONTAIN	2.446E+00	2.451E+00	2.453E+00	2.872E+00	4.021E+00
	PVLCS	8.615E+00	3.006E+00	3.006E+00	3.067E+00	3.067E+00
	LIQUID	1.166E-01	1.166E-01	4.548E-01	6.645E-01	6.645E-01
	IN91-56	N/A	N/A	4.168E-01	4.168E-01	4.168E-01
	Total	*11.18*	*5.57*	*6.33*	*7.02*	*8.17*

Control Rod Drop Accident

Table 5 – CRDA Input Assumptions

Parameter	Current USAR Analysis (PR(c)-400-2)	Power Uprate Analysis (PR(c)-400-3)
Power Level	3039 MWt	3100 MWt
Rods Damaged (GE 8x8)	770	850
Radial Peaking Factor	1.5	1.65
Release Fractions • Noble Gases • Iodines	 1.00 0.50	 1.00 0.50
Coolant to Steam Dome Fractions • Noble Gases • Iodines	 1.00 0.10	 1.00 0.10
Plateout in Condenser/Turbine • Noble Gases • Iodines	 1.00 0.10	 1.00 0.10
Leakage Rate	1% per day	1% per day
Leakage Duration	24 hours	24 hours
Control Room (CR) Ventilation • Ingress/Egress • Filtered Intake • Discharge • Filtered Recirculation	 0 cfm 4,000 cfm 4,000 cfm 0 cfm	 10 cfm 1947.6 cfm 10 + 1947.6 = 1957.6 cfm 1947.6 cfm
CR Filter Start Time	66 sec.	66 sec.
EAB X/Q • 0-2 hours	 8.36×10^{-4} sec./m^3	 8.36×10^{-4} sec./m^3
LPZ X/Q • 0-8 hours • 8-24 hours • 1-4 days • 4-30 days	 1.12×10^{-4} sec./m^3 7.82×10^{-5} sec./m^3 3.61×10^{-5} sec./m^3 1.19×10^{-5} sec./m^3	 1.12×10^{-4} sec./m^3 7.82×10^{-5} sec./m^3 3.61×10^{-5} sec./m^3 1.19×10^{-5} sec./m^3
Main Control Room X/Q • 0-20 minutes • 20 minutes - 8 hours • 8-24 hours • 1-4 days • 4-30 days	 4.04E-03 sec/m^3 4.04E-03 sec/m^3 3.03E-03 sec/m^3 9.29E-04 sec/m^3 1.62E-04 sec/m^3	 4.04E-03 sec/m^3 9.65E-04 sec/m^3 7.56E-04 sec/m^3 2.32E-04 sec/m^3 4.05E-05 sec/m^3
Dose Conversion Factors	ICRP 2	ICRP 30

The following are the changes in assumptions:

- **Power Level:** A power level of 3100 MWt was assumed which is 102% of the Power Uprate power level.
- **Damaged Rods:** The number of damaged rods assumed in the initial analysis was based on a GE document. GESTAR II methodology dictates that an additional 10% be added to the number of damaged rods (770 x 1.1 = 847 ≈ 850). Use of GE 8 (8x8) fuel is slightly more conservative than use of GE11 (9x9 array) fuel.
- **Radial Peaking Factor:** The RPF assumed was conservatively increased from the 1.5 recommended in regulatory guidance to 1.65. This is consistent with the FHA analyses submitted to the NRC (Amendment 110).

- **Control Room Ventilation Model:** The revised analysis uses the current MCR ventilation model (~2000 cfm filtered intake & 2000 cfm filtered recirc.) The previous analysis used the previous model (4000 cfm filtered intake, no filtered recirculation).
- **Control Room X/Q:** The main control room X/Q were changed in order to credit SRP 6.4. Specifically, that document allows a factor of 4 reduction in MCR X/Q for plants with manual dual air intakes. This credit is also taken in the LOCA (Amendment 111) and FHA (Amendment 110) analyses.
- **Dose Conversion Factors:** The previous analysis used ICRP2 DCF. The Power Uprate analysis used ICRP30 DCFs.

Table 6 – CRDA Results

Dose (REM)	Power Uprate Analysis	Current USAR Value
EAB		
• Whole Body	7.036E-01	9.900E-01
• Thyroid	5.447E+00	7.800E+00
LPZ		
• Whole Body	2.163E-01	4.300E-01
• Thyroid	4.506E+00	5.900E+00
Control Room		
• Whole Body	7.637E-02	4.900E-01
• Skin	1.339E+00	7.900E+00
• Thyroid	5.505E-01	3.300E+00

Fuel Handling Accident

As discussed in the conference call between Echelon, River Bend Station, and the NRC on August 3, 2000 (1300 CDT), the Amendment 110 FHA analyses included the impact of Power Uprate. These analyses were approved by the NRC on March 3, 2000. Input assumptions are detailed in LAR 99-29, therefore, they are not included here.

AIR

①

LOCA DOSE MODEL - POWER UPRATE

0 - 24 SECONDS

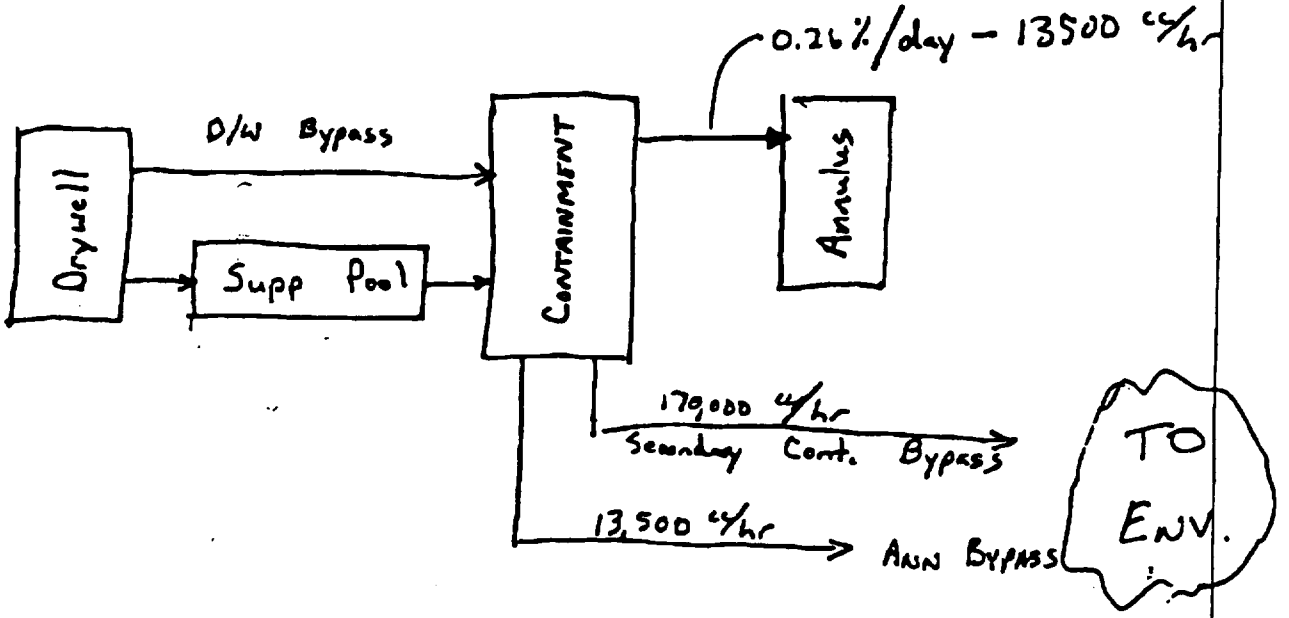

24 - 199 SEC.

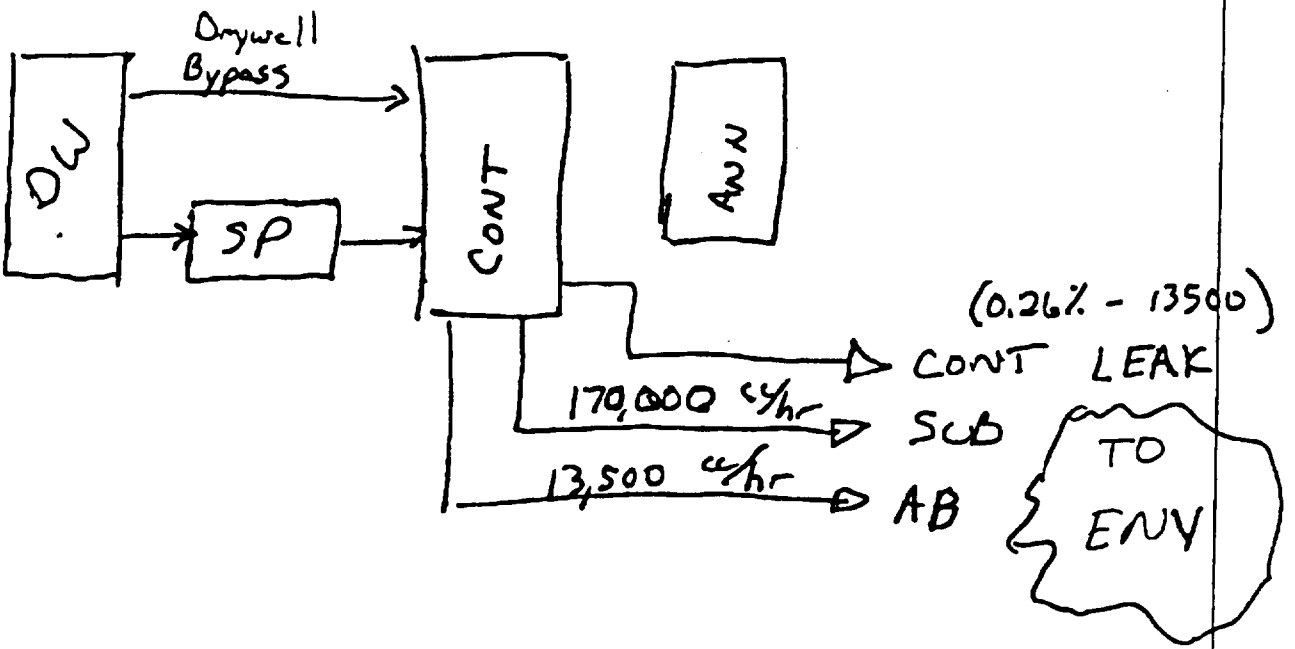

AIR

(2)

POWER UPRATE MODEL

199 - ~~700~~ 724 SEC

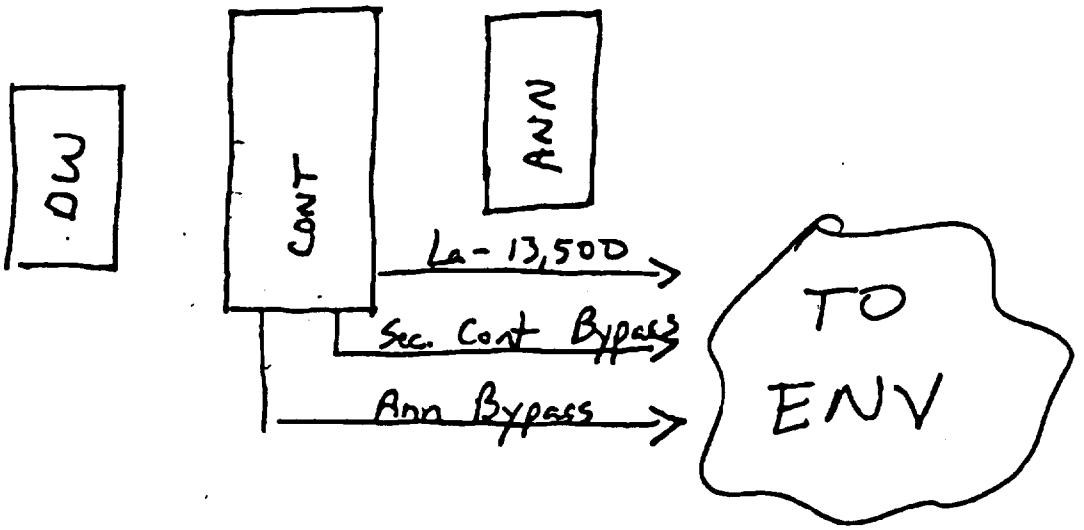

724 SEC - 30 DAYS

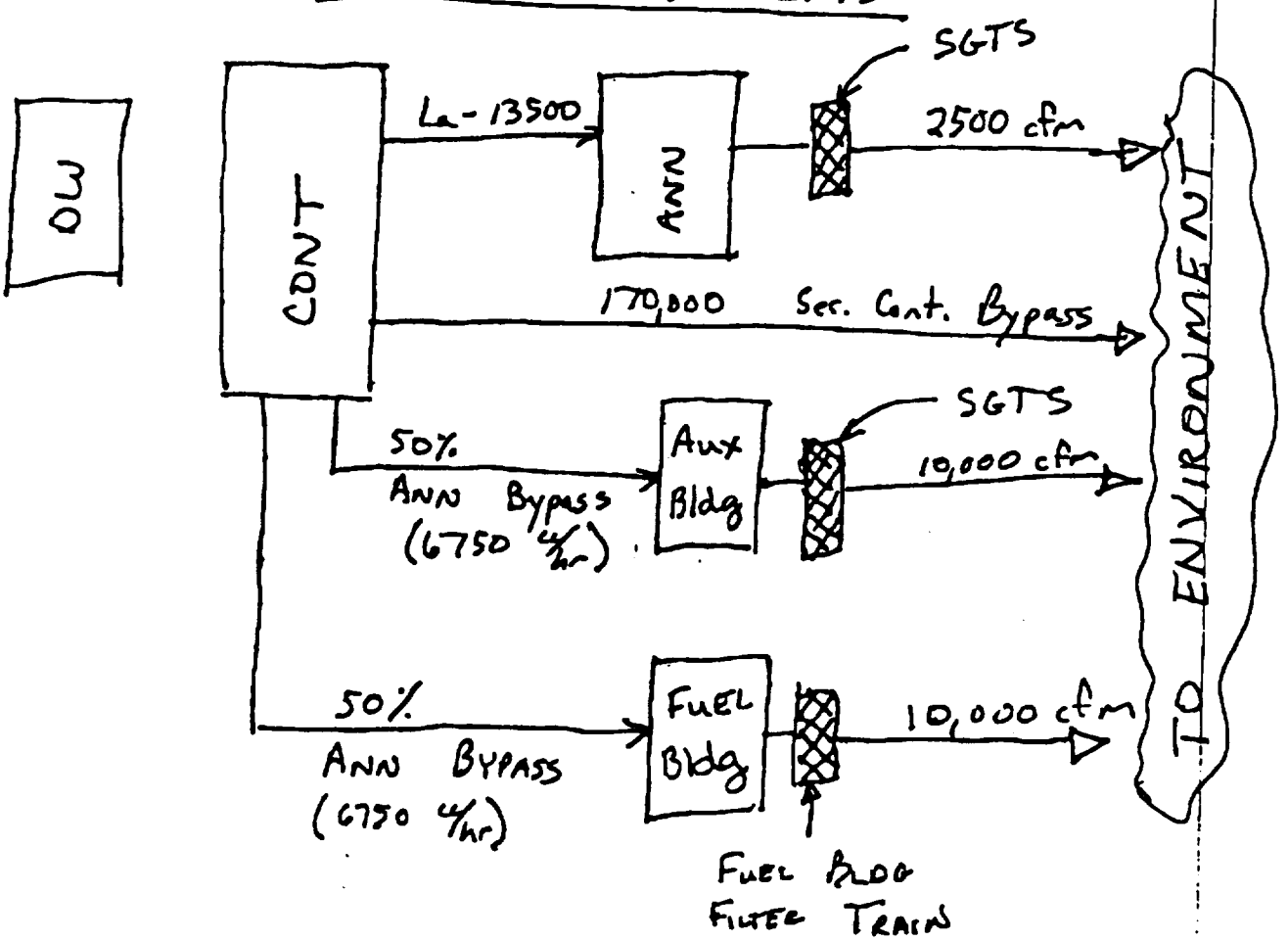

LIQUID

LOCA DOSE MODEL - POWER UPRATE

0-56 SEC

NO LEAKAGE

56 - 700 SEC

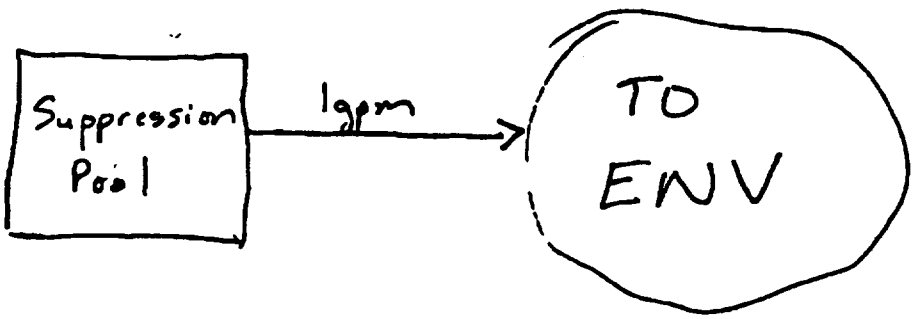
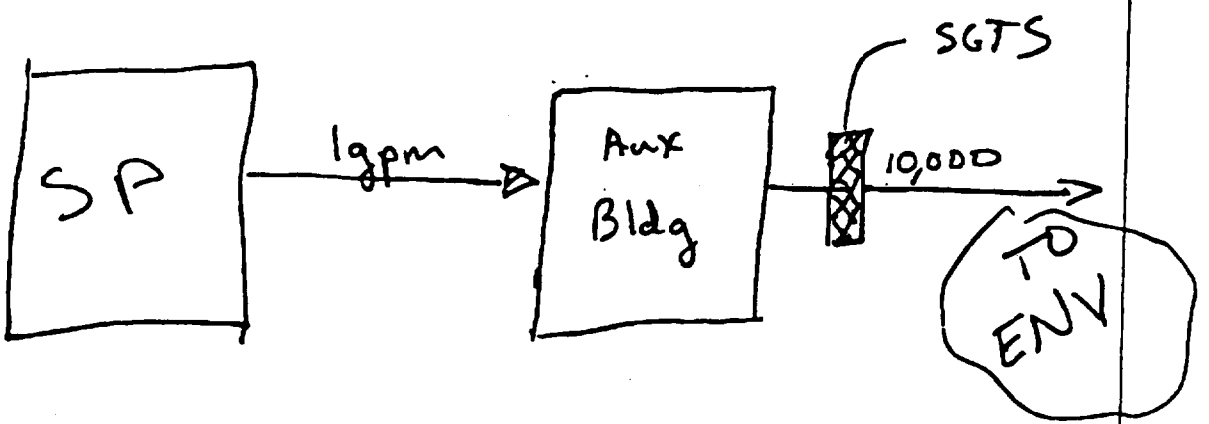
700 SEC - 30 DAYS