FRAMATOME
TECHNOLOGIES

July 31, 2000
FTI-00-1972

Document Control Desk
U. S. Nuclear Regulatory Commission
Washington, DC 20555-0001

Subject: Methodology Revision (Revision 4) to Framatome Technologies' RELAP5-Based, Large Break LOCA Evaluation Model—BAW-10168, Volume I for Non-B&W-Designed, Recirculating Steam Generator Plants.

Gentlemen:

Framatome Technologies, Inc. (FTI) has revised its large break LOCA (LBLOCA) evaluation model (EM)—BAW-10168P-A, Volume I, Revision 3, December 1996. The revised EM (BAW-10168, Revision 4), 15 sets of topical report change pages are attached hereto, is submitted for NRC review and approval.

Current LBLOCA calculations are performed using RELAP5 (BAW-10164P, Revision 4, September 1999), REFLOD3B (BAW-10171P-A, Revision 3, December 1995), and BEACH (BAW-10166P-A, Revision 4, February 1996) computations. Two computer codes and three computational phases are required. RELAP5 predicts blowdown system thermal-hydraulic behavior. REFLOD3B (using RELAP5-provided, end-of-blowdown conditions) predicts refill/reflood system thermal-hydraulic behavior. BEACH predicts the refill/reflood clad temperature response; it models only the core region using a standalone hot channel. BEACH does not provide system predictions; it is a transient boundary condition (from REFLOD3B)-driven set of subroutines within the RELAP5 computer code.

This EM revision streamlines and closely couples current LBLOCA calculation methods. It does so by eliminating REFLOD3B from the calculation. RELAP5—in a systems mode—is used to perform the entire prediction. During refill/reflood, BEACH heat transfer methods are applied, but the core and core channels are dynamically coupled to each other and to the reactor coolant system. The calculation is now a single-pass, dynamically coupled, systems prediction that uses only the RELAP5 computer code.

The revised EM does not require a change to the BEACH topical report, BAW-10166P-A, Revision 4, February 1996. A change to the RELAP5 topical report was necessary. The RELAP5 revision (BAW-10164, Revision 5) will be submitted separately. The EM change is discussed and evaluated in Appendix E, an addendum to Volume I of BAW-10168. The removal of REFLOD3B is not associated with SBLOCA methods discussed in BAW-10168, Volume II.

Note that a text change was made to the EM "Introduction" regarding its applicability to advanced cladding, specifically M5 cladding. This change was approved by the NRC in the SER (dated February 4, 2000) for the M5 topical report, BAW-10227.

3315 Old Forest Road, P.O. Box 10935, Lynchburg, VA 24506-0935
Telephone: 804-832-3000 Fax: 804-832-3663
Internet: http://www.framatech.com

T010 1/15

FTI intends to apply this revised EM in future LBLOCA analyses, likely beginning with the analysis of MOX lead test assemblies (LTAs) and batch fuel assemblies for insertion into Duke Energy's McGuire and Catawba units or with the North Anna fuel reload contract. To support FTI's needs, a completion date by the end of 2001 is requested.

The following attachment contains the EM revision pages to the LOCA topical report, BAW-10168. The material is considered non-proprietary to Framatome Technologies. If you require additional information, please contact me at 804/832-2964 or John Biller at 804/832-2600.

Sincerely,

J. J. Kelly, Manager
B&W Owners Group Services

Attachment

cc:	Stuart Bailey	-	Nuclear Regulatory Commission
	F. R. Orr	-	Nuclear Regulatory Commission
	J. R. Biller	-	Framatome Technologies/OF53
	J. A. Klingenfus	-	Framatome Technologies/OF53
	C. F. McPhatter	-	Framatome Cogema Fuels/OF12
	C. K. Nithianandan	-	Framatome Technologies/OF53
	R. N. Edwards	-	Framatome Technologies/MD82
	M. A. Schoppman	-	Framatome Technologies/MD82

Attachment

BAW-10168P

Revision 4
July 2000

- RSG LOCA -

BWNT Loss-of-Cooling Accident Evaluation Model for Recirculating Steam Generator Plants

Volume I – Large Break

Framatome Technologies
P. O. Box 10935
Lynchburg, Virginia 24506-0935

Framatome Technologies
Lynchburg, Virginia 24506-0935

Topical Report BAW-10168P
Revision 4

July 2000

- RSG LOCA -

BWNT Loss-of-Cooling Accident Evaluation Model for Recirculating Steam Generator Plants

Volume I – Large Break

Key Words: Large Break, LOCA, Transient, Water Reactors, Evaluation Model

ABSTRACT

This document presents the generic large and small break models used by B&W Nuclear Technologies for evaluating the performance of the emergency core cooling systems (ECCS) following a loss-of-coolant accident (LOCA) for Westinghouse and Combustion Engineering designed Pressurized Water Reactors (PWR). The large break model is discussed in Volume I and the small break model in Volume II. The Licensing Addendum provides a historical record of related correspondence including question responses, NRC Safety and Technical Evaluation Reports, and NRC approval letters. The models have been developed and compared with the required and acceptable features contained in Appendix K of the Code of Federal Regulations, 10CFR50. The evaluation models are shown to conform to Appendix K requirements.

Topical Revision Record

Volume I – Large Break

Documentation Revision	Description
0	Original Issue
1	Revised to incorporate the changes discussed in the responses to questions.
2	Revision of SBLOCA model Volume II only. Incorporate the Wilson phase separation model, the BWUMV critical heat flux correlation, and a CCFL correlation. Perform all required calculations (swell level, hot channel temperature) in RELAP5; thus, deleting the use of the FRAP-T6 and FOAM2 computer codes. Document selected modelling studies (time step, leak discharge coefficient, etc.) Creation of Licensing Addendum to record and maintain copies of SERs, NRC questions, BWNT responses, etc. in an orderly manner for all revisions of BAW-10168. Removal of requirement that the EM can only be applied to BWNT supplied fuel. Various additional non-technical changes.
3	Letter Report Addendum Revising LBLOCA Model Volume I only. FRAP-T6-B&W removed from code package. The revised RELAP5 code, with improved EM pin model described in BAW-10164, Revision 3, will be used for blowdown calculations. BEACH, BAW-10166, Revision 4 with its improved quench front model (NEWQUEN), will be used for refill/reflood hot channel calculations.

Topical Revision Record (Cont'd)

Volume I – Large Break

Documentation Revision	Description
4	Revision of LBLOCA model Volume I only. Remove REFLOD3B code from LBLOCA code package. Refill/reflood calculations performed by RELAP5 run in a systems configuration, i.e. the entire RCS will be modeled. BEACH routines within RELAP5 will continue to be used, but they will now be dynamically coupled to the entire RCS. This revision is documented in Appendix E. No BEACH topical report revisions were made. Needed BEACH changes were incorporated into the RELAP5 revision given in BAW-10164, Revision 5.

VOLUME I CONTENTS

Page

1. INTRODUCTION 1-1

2. COMPLIANCE TO 10CFR50.46 2-1

3. DEFINITION OF LBLOCA MODEL VERSUS INPUT 3-1

4. LARGE BREAK LOCA EVALUATION MODEL 4-1

   4.1. Model Applicability 4-1
   4.2. Transient Description and Computer Code Interfaces 4-1
   4.3. Features of Model 4-3
      4.3.1. System Noding 4-3
      4.3.2. Sources of Heat 4-5
      4.3.3. Swelling, Rupture, and Thermal Properties 4-11
      4.3.4. Blowdown Phenomena 4-15
      4.3.5. Single Failure 4-21
      4.3.6. Post-Blowdown Phenomena 4-22
   4.4. Compliance of Model 4-27

5. LOCAL CLADDING OXIDATION 5-1

6. MAXIMUM HYDROGEN GENERATION 6-1

7. COOLABLE GEOMETRY 7-1

8. LONG-TERM COOLING 8-1

   8.1. Establishment of Long-Term Cooling 8-1
   8.2. Boric Acid Concentration 8-2

9. REQUIRED DOCUMENTATION 9-1

10. REFERENCES 10-1

VOLUME I CONTENTS (Cont'd)

Page

APPENDIXES

A. Sensitivity Studies A-1
B. Assessment of Evaluation Model Revision 1 changes B-1
C. Justification of Appendix A Sensitivity Studies C-1
D. LBLOCA Letter Report Addendum D-1
E. RELAP5 Standalone Methodology - REFLOD3B Removal E-1

List of Tables

Table		Page
1-1.	Applicable PWR Plant Categories	1-3
9-1.	Additional Evaluation Model Guidelines Code Options used In Evaluation Model	9-5
9-2.	Additional Evaluation Model Guidelines Generic and Prescribed Inputs for the Evaluation Model	9-9
A-1.	Parameter Comparison for the Base and Reduced Time Step Cases	A-20
A-2.	Parameter Comparison for the Base and Loop Noding Cases	A-20
A-3.	Parameter Comparison for the Base and Break Noding Cases	A-21
A-4.	Parameter Comparison for the Base and Pressurizer in the Broken Loop Cases	A-21
A-5.	Parameter Comparison for the Base and Pump Degradation Cases	A-22
A-6.	Parameter Comparison for the Base and Cross Flow Cases	A-22
A-7.	Parameter Comparison for the Base and Core Noding Cases	A-23
A-8.	Parameter Comparison for the Spectrum Cases	A-24
A-9.	Initial Hot Fuel Rod Conditions	A-25
A-10.	Parameter Comparison for the Time-in-Life Study	A-26
A-11.	Most Severe Break Case-2A/G at PD with $C_D = 0.8$	A-27
E-1.	User-Inputs for the Revised LBLOCA EM	E-19
E-2.	Plant Parameters and Initial Conditions—9.7-ft Peak Power	E-20
E-3.	Sequence of Events—DECLG Break w/C_D = 1.0, 9.7-ft Peak Power	E-21
E-4.	LOCA Summary—DECLG Break w/C_D = 1.0, 9.7-ft Peak Power	E-22
E-5.	Plant Parameters and Initial Conditions—9.7-ft Peak Power	E-23
E-6.	Sequence of Events—DECLG Break w/C_D = 0.6, 9.7-ft Peak Power	E-24
E-7.	LOCA Summary—DECLG Break w/C_D = 1.0, 9.7-ft Peak Power	E-25

List of Figures

Figure		Page
4-1.	Large Break Analysis Code Interface	4-33
4-2.	RELAP5/MOD2-BWNT Noding Diagram – Loop	4-34
4-3.	RELAP5/MOD2-BWNT Noding Diagram – Reactor Vessel	4-35
4-4.	Decay Heat Curve	4-36
4-5.	Outside Weight Gain Oxidation Curves for Zircaloy-4	4-37
4-6.	Inside Weight Gain Oxidation for Zircaloy-4 in Water and Steam	4-38
4-7.	Inside Weight Gain Oxidation for Zircaloy-4 Resulting from Fissioning	4-39
4-8.	Rupture Temperature as a Function of Engineering Hoop Stress and Ramp Rate	4-39
4-9.	Circumferential Burst Strain as a Function of Rupture Temperature	4-40

List of Figures (Cont'd)

Figure		Page
E-1.	RELAP5 Loop Noding Diagram—Westinghouse 4-Loop Plant	E-26
E-2.	RELAP5 Core Noding Diagram—Westinghouse 4-Loop Plant	E-28
E-3.	Unruptured Node PCT, 10-ft Axial Peak	E-29
E-4.	Ruptured Node PCT, 10-ft Axial Peak	E-29
E-5.	RV Downcomer Level, 10-ft Axial Peak	E-30
E-6.	Core Collapsed Level, 10-ft Axial Peak	E-30
E-7.	Hot Channel Quench Front, 10-ft Axial Peak	E-31
E-8.	RV Upper Plenum Pressure, 10-ft Axial Peak	E-31
E-9.	Integrated Core Inlet Flow, 10-ft Axial Peak	E-32
E-10.	Integrated Core Outlet Flow, 10-ft Axial Peak	E-32
E-11.	Hot Channel Mass Flow, 10-ft Axial Peal	E-33
E-12.	Integrated CRF, 10-ft Axial Peak	E-33
E-13.	RELAP5 Core Noding Diagram—Westinghouse 3-Loop Plant	E-34
E-14.	RELAP5 Loop Noding Diagram—Westinghouse 3-Loop Plant	E-35
E-15.	Unruptured Node PCT, 10-ft Axial Peak	E-37
E-16.	Ruptured Node PCT, 10-ft Axial Peak	E-37
E-17.	RV Downcomer Level, 10-ft Axial Peak	E-38
E-18.	Core Collapsed Level, 10-ft Axial Peak	E-38
E-19.	Hot Channel Quench Front, 10-ft Axial Peak	E-39
E-20.	RV Upper Plenum Pressure, 10-ft Axial Peak	E-39
E-21.	Integrated Core Inlet Flow, 10-ft Axial Peak	E-40
E-22.	Integrated Core Outlet Flow, 10-ft Axial Peak	E-40
E-23.	Hot Channel Mass Flow, 10-ft Axial Peal	E-41
E-24.	Integrated CRF, 10-ft Axial Peak	E-41

1. INTRODUCTION

This report describes the features of the emergency core cooling system (ECCS) evaluation mode used by BWNT for application to Westinghouse (W) and Combustion Engineering (CE) designed PWR's. The evaluation model is applicable to the pressurized water reactors (PWR) categorized in Table 1-1. There are no significant system design differences for the nuclear steam system (NSS) and the ECCS within each category as these design features are the basis for the grouping.

For core designs employing the M5 alloy for fuel pin cladding, the material properties, inputs, methods, and correlations, described in BAW-10227 (References 18 and 19) shall supercede, as appropriate, those described within this volume.

Specific design information for each plant category is considered input to the evaluation model and is generated using the assumptions and techniques described herein.

The "Acceptance Criteria for Emergency Core Cooling Systems for Light Water Nuclear Power Reactors" (10CFR50.46) was issued by the NRC in January 1974. Appendix K of 10CFR50.46 defines the required and acceptable features of models to be used to evaluate the performance of the ECC systems. The information presented in this document defines the BWNT evaluation model and shows that the model conforms to Appendix K requirements.

The topical report is divided into two volumes. The first volume presents the large-break evaluation model. The second volume presents the small-break evaluation model. Each of the volumes contain the following seven sections which define the respective evaluation models:

1. Definition of model versus input (Section 3).

2. Features of the evaluation model and statements of conformity to Appendix K (Section 4).

3. The calculational technique used to evaluate the maximum local cladding oxidation (Section 5).

4. The calculational technique used to evaluate the maximum hydrogen generation (Section 6).

5. The technique used to evaluate conformance to the coolable geometry criterion (Section 7).

6. The technique for establishing conformance to the long-term cooling criterion (Section 8).

7. Required documentation necessary to meet 10CFR50.46 (Section 9).

Addition definition and background information for the evaluation models is provided in the addendum, which contains licensing data – responses to NRC questions, position papers, SERs, etc. – on previous and current revisions to the evaluation model.

17. M. G. Izenson and C. J. Crowley, "Scaling of Flashing Transient Behavior to Full Scale – Evaluation of UPTF Test 5A," Technical Memorandum TM-1277, CREARE Inc., Hanover, NH 03755, September 1988.

18. D. B. Mitchell and B. M. Dunn, "Evaluation of Advanced Cladding and Structural Material (M5) in PWR Reactor Fuel," BAW-10227P, September 1997, Framatome Cogema Fuels, Lynchburg, Virginia.

19. S. A. Richards, NRC, to T. A. Coleman, FCF, Revised Safety Evaluation (SE) for Topical Report BAW-10227P: "Evaluation of Advanced Cladding and Structural Material (M5) in PWR Reactor Fuel" (TAC No. M99903), February 4, 2000.

APPENDIX E

RELAP5 Standalone Methodology – REFLOD3B Removal

(This appendix was added in its entirety in Revision 4.)

E.1. Introduction

This appendix describes an update to Framatome Technologies' (FTI) recirculating steam generator (RSG) large break LOCA evaluation model (EM). No SBLOCA EM changes were made. The update is the culmination of an effort to improve predictive capabilities and to streamline calculation methods. The update is based on the current NRC-approved LBLOCA EM, Volume I of Reference 1 and Reference 6.

Current LBLOCA calculations are performed using RELAP5, Reference 2, REFLOD3B, Reference 3, and BEACH, Reference 4, computations. Two computer codes and three computational phases are required. RELAP5 predicts blowdown system thermal-hydraulic behavior. REFLOD3B (using RELAP5-provided, end-of-blowdown conditions) predicts refill/reflood system thermal-hydraulic behavior. BEACH predicts the refill/reflood clad temperature response; it models only the core region using a standalone hot channel. BEACH does not provide a system prediction; it is a transient boundary condition (from REFLOD3B)-driven set of subroutines within RELAP5.

This appendix describes the removal of REFLOD3B from the current LBLOCA code package. RELAP5—in full system mode—is now used to perform the entire large break transient prediction. The replacement of REFLOD3B with RELAP5 provides a single-pass, dynamically coupled, system transient calculation. The improvement is termed the "standalone" RELAP5 methodology.

The BEACH topical report was not revised; changes were incorporated into the RELAP5 topical report, BAW-10164, Revision 5. During refill/reflood, BEACH heat transfer methods are still applied, but the core channels are no longer boundary condition-driven. The core is now totally coupled both within, crossflow between channels, and without to the reactor coolant system. An update to the RELAP5 topical report was necessary. The revised RELAP5 report also provides benchmark cases supporting this EM change. The accompanying RELAP5 revision—BAW-10164P, Revision 5—will be submitted separately to the NRC for review.

The following sections describe the LBLOCA EM changes. The applicability of existing sensitivity studies is discussed. The results of calculations, based on typical plant application models, using current and revised techniques are compared.

E.2. LBLOCA Evaluation Model Improvements

Use of RELAP5 to perform transient, system refill/reflood calculations provides an opportunity to improve modeling. RELAP5 is fully capable of simulating important reflood phenomena—notably ECC bypass and steam binding. Code performance was developed and assured through a series of benchmark and plant application trials. RELAP5 was benchmarked against varied UPTF, SCTF, and REBEKA tests. The benchmark results are documented in Revision 5 of the RELAP5 topical report, BAW-10164. EM changes stem from and are supported by the benchmarks. EM upgrades—noding, methods, etc.—to provide proper benchmark or modeling predictions are discussed below.

The RELAP5/MOD2-B&W code is used to predict the reactor coolant system thermal-hydraulic system response from blowdown through reflood to core quench for an LBLOCA. A noding arrangement, representative of a 4-loop Westinghouse-designed plant, is shown in Figures E-1 and E-2. The differences between the current and the revised EM are located in the intact loops, the downcomer and lower head/plenum region, the steam generator inlet plenum, and the core region.

The intact loops (cold and hot legs) are no longer combined into a single loop; rather each loop is modeled individually. The downcomer and lower plenum regions are modeled in finer axial and azimuthal detail, providing for a better representation of the void distribution that affects ECC water bypass and the system hydrostatic head balance during reflooding. Axially the downcomer noding detail was increased by about 50 percent. The downcomer—previously a vertical set of single circumferential nodes—is divided into two circumferential nodes. The broken and its nearest unbroken cold legs are connected to one downcomer node, representing 75 percent of the downcomer in the case of a 4-loop plant. The remaining unbroken cold leg, the one furthest removed from the broken cold leg, is attached to the second downcomer node, representing 25 percent of the downcomer for a 4-loop plant. This arrangement is consistent with the configuration used in the UPTF benchmark analyses. A ⅓:⅔ circumferential downcomer noding split would be used for a 3-loop plant. A 3-loop plant representation is shown in Figures E-13 and E-14.

The downcomer and RV inlet nozzle connections are coupled via double junctions with equal flow areas. (Note that an analogous technique is used in the current approved EM at the RV outlet nozzles.) The representation provides a proper flow simulation across the nozzle belt and upper head venting through the spray nozzles. No abnormal flow patterns were noted using the dual junctions at the downcomer/RV inlet nozzle connections. A high k_{rev}, associated with mixing losses at the nozzle belt region, is used at the broken RV nozzle inlet junctions. The resistance was defined in the UPTF benchmarking by increasing its value until a reasonable data match was obtained. The UPTF value is 2.20 (with a junction area of 3.63 ft^2). It is converted to a plant value by equating k/A^2 from the plant with that from the UPTF benchmark and solving for the plant resistance.

An option to the Wilson bubble rise model was developed for use throughout the downcomer and lower head/plenum regions. Its overall purpose is to maintain an appropriate void distribution by accounting for, in an averaged sense, the region hydraulics—a liquid ECC plume falling into the downcomer through the downcomer. The option is based on the UPTF and SCTF benchmark discussed in Revision 5 of the RELAP5 topical report, BAW-10164. When the option is selected, the interphase drag in the downcomer, lower head, and lower plenum volumes is reduced by user-input multipliers (see Table E-1) applied to various flow regimes. The drag option is accompanied by increasing the interphase heat transfer in the regions by a factor of 1.1. User-inputs to the option are given in Table E-1 and in the RELAP5 topical report, Revision 5.

During normal plant operation, the accumulator tanks are pressurized with nitrogen gas above the ECC liquid. Nitrogen is dissolved in the ECC liquid according to the pressure and temperature of the system. As the injected ECC liquid reaches the lower pressure of the RCS, the dissolved nitrogen comes out of solution. The dissolution of nitrogen from accumulator liquid is modeled in this EM revision. The model, as described below, is based on BNL studies (Reference 7). The amount of nitrogen emerging from the accumulator water into the cold legs is estimated by

$$\dot{m}_{i,N_2} = \dot{m}_{A_i} \quad C_{N_2} \quad ,$$

where:

$\dot{m}_{A_i}$ is the mass flow rate of accumulator water into each accumulator line, and

C_{N_2} is the concentration of N_2 in solution, kg of N_2 / kg of solution.

The concentration of nitrogen in the accumulator water is related to the solubility by

$$C_{N_i} = \frac{X_{N_2}}{1 - X_{N_2}} \frac{M_{N_2}}{M_{H_2O}} \approx X_{N_2} \frac{M_{N_2}}{M_{H_2O}} \quad for \quad X_{N_2} << 1 \quad ,$$

where:

X_{N_2} is the mole fraction of N_2 in water (the solubility), moles of N_2 / mole of solution,

M_{N_2} is the molecular weight of nitrogen, 28.016 kg, and

M_{H_2O} is the molecular weight of water, 18.016 kg.

The solubility of nitrogen is related to the partial pressure of nitrogen in the gas phase by Henry's law

$$X_{N_2} = \frac{P_{N_2}}{H} ,$$

where:

P_{N_2} is the partial pressure of N_2 in the gas phase and

H is the coefficient for Henry's law (Reference 8).

The partial pressure of nitrogen is computed by

$$P_{N_2} = P_{NPP} - P_{H_2O}\big|_{sat} ,$$

where:

P_{NPP} is the accumulator fluid pressure obtained from the nuclear power plant (NPP) and

$P_{H_2O}\big|_{sat}$ is the saturation pressure for water corresponding to the water temperature in the NPP accumulator water.

The previous equation set is incorporated into the RELAP5 transient prediction using control variables. Once emptied, the accumulators are isolated from the transient calculation.

Nitrogen, representing air, is also modeled in the containment. This minimizes non-physical condensation behavior associated with brief periods of reverse break flow at the end of blowdown and during refill. The nitrogen quality is determined based on the transient containment backpressure curve, an assumed saturation temperature, a containment atmosphere at 100 percent relative humidity, and the ideal gas law. The calculation can be iterated to converge on the saturation temperature. Based on a user-input table of containment pressure and temperature, and nitrogen quality, RELAP5 determines the amount of non-condensable gas in the containment during the transient.

The upgraded downcomer-cold leg modeling eliminates the need for the current bypass model. The current model injects ECC fluid into the unbroken cold legs based on local system pressure, mixes the ECC with local system fluids, and then removes the ECC from the RCS. The fluid is not processed through the break; after mixing, it is spilled to the containment. The broken loop ECC is discharged, not through the break, but directly to the containment. The EM revision injects ECC into the intact cold legs and provides a means to mechanistically calculate the ECC water bypassed from the downcomer via the cold leg nozzle to the break. The broken loop ECC is still discharged directly to the containment.

The lower plenum noding detail was increased by 50 percent. The formerly lumped lower plenum heat structure is now accurately distributed within each node. The nodes at the bottom of the downcomer are extended downward 3 feet. Double junctions provide for appropriate flows between the downcomer and the lower plenum/lower head regions. This regional configuration was developed based on UPTF benchmark Test 27 (presented in Revision 5 of the RELAP5 topical report, BAW-10164). This allows for liquid flow into the lower head, while providing for steam flow into the downcomer. Again, no abnormal flow patterns were noted. For use during near end of blowdown, refill (and reflood), when the steam downflow from the downcomer to the lower plenum/lower head occurs, the downcomer/lower head junction non-condensable gas qualities and void fractions are multiplied by 10^{-3} (user-input) to prevent steam downflow into the lower head. This reduces the lower plenum, swell level and, conservatively, tends to increase the time until start of core recovery. A large k_{rev}, 10^6, is used to stop liquid backflow from the lower head to the downcomer. This mimics the blowdown modeling of the current EM that has no path connecting the downcomer and lower head. The junction also provides for proper liquid draining near the end of blowdown and during refill. The top, lower plenum, node height is set to 0.5 feet to reduce the potential for liquid carryover into the core as the transient nears the end of refill. Importantly, the modeling details—again developed and verified through the benchmarks reported in Revision 5 of the RELAP5 topical report—provide for a proper void distribution in the lower plenum and lower head regions.

Within the core region, inlet and exit unheated (non-nuclear) nodes were added to each core channel. This simplification brings the U-tube LOCA EM into accord with the approved EM for B&W-designed plants, Reference 5. Since a system transient is being computed, core channels are now crossflow-connected throughout the entire transient. Previously, BEACH core channels were not connected with crossflow junctions. The crossflow junctions are non-homogeneous. Forward and reverse resistances are set to 100 based on SCTF benchmarks, reported in Revision 5 of BAW-10164. At the start of refill-reflood, the core region is modeled as non-equilibrium and non-homogeneous, as it is in the current BEACH calculation. The core baffle and bypass representation is non-equilibrium/non-homogeneous, unchanged from the current EM.

After the reflood trip, core exit junctions use the CCFL correlation in RELAP5 to properly regulate backflow into the core, preventing non-physical draining and core cooling. The CCFL model is based on the configuration of the fuel assembly, upper end fitting and is consistent with the model used in the UPTF and SCTF benchmarks. The model is the same as that originally used in a comparable geometric situation at the steam generator, tube inlet for U-tube SBLOCA calculations. The coefficients used are m = 1.0 and c = 0.8.

The heat structures and the steady state volume-averaged, fuel temperature uncertainties in the hot and average fluid channels are unchanged from Reference 6. One structure is used to represent the average core. Two heat structures are used in the hot channel—one structure simulates the hot pin while the second structure represents the hot assembly (less the one hot pin). Each heat structure contains its own volume-averaged, fuel temperature uncertainty. The uncertainties are derived from the fuel code used; TACO3 in this instance. Use of multiple heat structures in the hot fluid channel allows for improved realism in modeling the energy distribution between the hot pin and the hot assembly. Determination of the linear heat rates for the hot pin is unchanged. It is based on the hottest pin in the core and it uses the limiting $F_{\Delta H}$. The hot bundle heat structure is based on the average radial peaking within the hot bundle—that is, the hot bundle is based on a cycle-specific, operational limit factor. BEACH calculation techniques, performed during refill/reflood, remain largely unchanged from approved methods.

Per the current EM, credit for rupture flow diversion is neglected; this was discussed (and accepted) extensively during the review of the current approved EM. Likewise, the form loss increase associated with clad rupture is neglected. While approved modeling techniques (rupture, droplet breakup, etc.) at the rupture location remain unchanged, their zone of application was expanded. A rupture zone of improved cooling was established consisting of three nodes—the rupture node and the node immediately above and the node immediately below the ruptured node. The improved cooling manifests itself through turbulence and rewet enhancements propagating from the location of rupture—the propagation of a second quench front. Details of the basic rupture model are discussed in Reference 4 Sections 2.1.3.7 and 2.1.3.8. Enhanced cooling is credited in the rupture node, and in the volumes immediately adjacent to the rupture node if the volumes are within 50 F of the rupture temperature. If an adjacent node is not within 50 F of the rupture temperature, then credit for improved cooling is not taken. Implementation is through application of a user-input multiplier of 1000 to the rupture volume, liquid velocity multiplier, VELMULT. The combined multiplier, 1000 x VELMULT, is applied to the liquid velocities of the rupture zone nodes. A user-input multiplier of 10 is also applied to the droplet surface area increase proportionality constant, C_{maxDB}. The combined multiplier, 10 x C_{maxDB}, is computed for the ruptured node. Its application to the other nodes in the rupture zone is adjusted to compensate for any node height differences. The upstream and downstream propagation of cooling benefits originating from the ruptured location was demonstrated in the REBEKA test program. This is well documented in the approved BEACH topical report (Reference 4, Appendices D, E, and G). A rerun of the REBEKA benchmark,

accounting for the extension of the rupture-cooling model, still shows ample conservatism in clad temperature predictions; the benchmark is documented in Revision 5 of the RELAP5 topical report.

The hot leg connection to the steam generator, inlet plenum was split from the centerline into two parallel volumes. The angle for the bottom volume is set at 14 degrees to allow for proper liquid drainback during reflood using the horizontal stratification model in RELAP5. Noding detail was added to the steam generator, inlet plenum; it was divided into two vertical volumes. The revision permits counter-current flow during the reflood portion of the transient. The height of the lower node, representing the froth region, is based on and set equal to the value used in the UPTF and SCTF benchmarks. The configuration is totally consistent with these benchmarks reported in Appendix M, Revision 5 of the RELAP5 topical report. The steam generator tube inlet junctions are switched to homogeneous at the start of refill/reflood. As demonstrated by the benchmarks, the overall arrangement provides for proper, but conservative, liquid carryover into the steam generator, tube region.

The majority of the current LBLOCA EM was not changed. Blowdown methods are mostly unchanged. Note the lack of trending difference during blowdown and the equivalency at the end of refill between the comparison cases shown in Section E.4. Upgrades were made to the refill/reflood portion of the transient. Those modifications were described in prior paragraphs. Of importance, items such as decay heat modeling is unchanged. RELAP5 kinetics are used during blowdown, while a tabular input is used during the refill/reflood calculation—the same as what is currently done in BEACH. The leak volume is still non-equilibrium. The 0.90 heat transfer, weighting factor is still used during blowdown, but not thereafter. The UPTF correlation to model end of bypass is no longer necessary; it is replaced by mechanistic models. The end-of-blowdown (EOB) criterion remains unchanged. In the RELAP5 LBLOCA calculation, an EOB trip is set. The trip is used to activate the reflood option, lock the pump rotor, invoke the decay heat table, etc. The NEWQUEN reflood heat transfer option is still used, although the option was upgraded (by an option that overrides default values—see Table E-1) to better predict (slows) quench front advancement for the SCTF benchmark cases (see Revision 5 of the RELAP5 topical report). For low pressure calculations ($0 <$ pressure $< 10^6$ Pa) with node void fractions less than 10^{-4} (user-input), the vapor temperature will closely approximate the saturation temperature. Under these conditions, U_g is set equal to $U_{g,sat}$ to prevent non-physical vapor superheat—unrealistically high vapor temperatures—due to poor RELAP5 energy partitioning at small void fractions.

The replacement of REFLOD3B by RELAP5 advances EM LBLOCA technology. Through mechanistic modeling of ECC bypass and steam binding and allowing crossflow during reflood, clad temperature predictions generally will be reduced. In Section E.4, note the agreement between REFLOD3B- and RELAP5-predicted parameters. Core flows and levels are examples. This is an indication of proper RELAP5 reflooding predictions. Margin gains to the contrary, substantial conservatism remains within the refill/reflood transient. Two clear examples are: the downcomer driving head is now reduced by several feet and the REBEKA benchmarks clearly show less than full credit was taken for rupture-induced core cooling mechanisms.

E.3. Sensitivity Study Impact

LOCA analysis requires that a number of sensitivity studies be performed with the evaluation model to establish model convergence and conservatism. The studies are grouped into three distinct categories: generic, confirmable, and plant-specific. This section addresses the studies and assesses their continued applicability. Obviously, FRAP-T6 studies are no longer of interest.

E.3.1. Generic Studies

Generic studies to determine solution convergence were performed and described herein, notably Volume I, Appendixes A, C, and D. Subsequent revisions to the base (Revision 0) EM showed the continued validity of existing studies or reestablished validity for the given evaluation model revision. Validation of the generic studies in this report will not be repeated for plant-specific applications of the EM update.

The generic studies are mainly blowdown studies—the portion of the EM that, excepting minor noding detail improvements, was unchanged. Accordingly, one would expect continued validity of these studies. With the removal of REFLOD3B, the blowdown EM detail is now continued through refill and reflood. Modeling appropriateness through these transient phases is validated using the same configuration in the UPTF and SCTF benchmarks, documented in Revision 5 of the RELAP5 topical report, BAW-10164. The following discussion indicates continued configuration applicability for the EM update.

RELAP5/MOD2-B&W Time Step Study

This study (Section A.2.1) verified that for light water reactor geometry the RELAP5 time step controller governs the code solution sufficiently to assure converge results in the thermal-hydraulic blowdown analysis. Alternate system designs within the group covered by the EM will not change that result. In this revision, RELAP5 is still used to predict system thermal-hydraulic blowdown behavior. Only additional nodes (in the lower plenum, downcomer, unheated core, and steam generator inlet plenum) and corresponding junctions were incorporated into the model. Experience dictates added

detail helps improve convergence, rather than causing divergence. Therefore, the sensitivity study remains applicable to the update and the previously approved blowdown time steps will be used (Reference 1, Volume III, page LA-420).

Beyond blowdown, the RELAP5 prediction will be continued through refill/reflood—the elimination of the REFLOD3B code (Reference 3). BEACH (Reference 4) routines will continue to be used in the analysis to predict clad thermal response. As such, the previous BEACH time step study should remain valid and steps no greater than 0.01 seconds (Reference 1, Volume III, page LA-421) will be used during refill/reflood.

RELAP5/MOD2-B&W Break Node Study

This study (Section A.3.1) verified that hydraulic stability is achieved by providing at least one control volume in the pipe between any adjacent component and the break node. The study is applicable to all plants covered by the evaluation model. EM changes increased the noding detail in regions buffered from the break. The RELAP5 model also provides substantially greater noding detail during the refill/reflood periods than did the previous REFLOD3B model. Therefore, it is concluded that the sensitivity study remains valid and the RELAP5 noding will be continued through refill/reflood. The UPTF and SCTF benchmark cases, reported in the revised RELAP5 topical report (BAW-10164, Revision 5), likewise, support this conclusion.

RELAP5/MOD2-B&W Pressurizer Location Study

This study (Section A.3.2) shows that there is little difference in results when the pressurizer is moved to the broken loop. This lack of sensitivity is expected to hold for all designs covered by the EM and this study will not be repeated. The node additions to the RELAP5 model are few and removed from the pressurizer location. Further, the RELAP5 model provides substantially greater noding detail during the refill/reflood periods (Note that the pressurizer plays not significant role during this phase of an LBLOCA transient.) than did the previous REFLOD3B model. It is concluded that the sensitivity study remains valid and the intact loop pressurizer location will be continued through refill/reflood. Finally, cases run during the development of the standalone RELAP5 EM showed the same outcome as the study in Section A.3.2—locating the pressurizer in an intact loop is limiting relative to a broken loop location.

RELAP5/MOD2-B&W Core Crossflow Study

This study (Section A.3.4) verified that crossflow in a light water reactor is limited and does not substantially alter the blowdown course of a LOCA transient. The study varied the approved base resistance, 75, by factors of 100 and 0.01 without meaningful change in results. EM updates—noding and junction additions, etc.—would not affect the continued validity of the study.

This EM revision is changing the resistance value to 100, a value still well within the range of the original blowdown study. The updated value, 100, will be used throughout an LBLOCA transient—blowdown, refill, and reflood. Use of the value during refill/reflood is supported by the SCTF benchmark reported in the RELAP5 topical report (BAW-10164, Revision 5). Accordingly, a crossflow resistance of 100 is well justified and will be used in the revised EM.

RELAP5/MOD2-B&W Core Noding Study

In conjunction with the crossflow study, this study (Section A.3.5) verifies that modeling a light water reactor core in six axial segments provides sufficient spatial detail. The heated core spatial detail was increased to 20 volumes in the Trojan (and subsequent) plant LOCA application (BAW-10177, Revision 0, October 1990). The original core noding sensitivity study illustrated that increasing the number of core axial nodes beyond six volumes does not alter the RELAP5 blowdown solution. Utilization of 20 axial core nodes is, therefore, considered an improvement in the model that is within the scope of the EM. Since the number of heated axial core nodes is unchanged the core noding sensitivity study remains applicable to this EM revision. The addition of an unheated node at a core channel inlet and exit does not affect the sufficiency of using a 20 node heated core. Use of a 20 node heated core with unheated core volumes was found acceptable in the once-through steam generator LOCA EM (Reference 5). Continuing the use of the blowdown configuration in refill and reflood is validated through the benchmarks documented in Revision 5 of the RELAP5 topical report.

REFLOD3B Primary Coolant Pump Rotor Resistance Study

Irrespective of the removal of the REFLOD3B computer code from the LBLOCA code package, this study (Section A.2.4) retains purpose. The study, along with similar studies by others, confirms that use of a locked-rotor assumption is conservative. That the increased loop resistance increases steam binding, reduces the core flooding rate, and increases the predicted PCT. Hence, the revised EM, based on a consistent history of results from this type of study, will continue to make use of the locked rotor assumption.

E.3.2. Confirmable Studies

Several EM studies are considered confirmable studies. Generally, the studies remain valid under most but not all circumstances. The following is a discussion of why (or why not) the studies remain valid for the current EM update.

REFLOD3B Loop Noding Study

With the removal of REFLOD3B, this study (Section A.2.3) is no longer applicable. The volume and junction configuration used during blowdown remains unchanged during refill/reflood. The use of a pressure drop penalty, accounting for losses due to steam-water interaction at ECC injection sites, is no longer necessary. RELAP5, unlike REFLOD3B, provides for mechanistic modeling of the phenomena. The adequacy and appropriateness of the configuration is demonstrated and verified by the UPTF and SCTF benchmarks documented in Revision 5 of the RELAP5 topical report, BAW-10164. The benchmark models use the same simulation configuration as the revised EM.

RELAP5/MOD2-B&W Pump Degradation Study

This study (Section A.3.3) established the limiting pump degradation multiplier by uniformly altering the pump effects on core flow. The study can be applied to all plants experiencing similar blowdown core flow histories. Only minor changes, mostly providing improved modeling detail, are proposed to the blowdown model. Because of EM updates, the magnitude of the blowdown core flow may be altered to some small extent relative to the original study. However, proposed blowdown EM changes would not affect core flow uniformity, alter the balance between hot and average channel core flows, or influence the blowdown transient differences observed in the study between the various pump degradation multiplier curves. Therefore, the sensitivity study remains applicable.

Time-in-Life Study

The time-in-life study (Section A.3.9) indicated that the initial fuel temperature is the dominant fuel burnup-related parameter affecting the LOCA transient. Section C.3 of the topical report concludes that, excepting blowdown rupture cases (unlikely and unseen to date), beginning-of-life conditions are limiting. The potential for a blowdown rupture is ruled out on a case-by-case basis via the examination of fuel conditions relative to the highest burnup to be considered in the evaluation. If a blowdown rupture cannot be ruled out, an independent time-in-life study is conducted to determine the limiting burnup for the analysis. EM revisions presented herein do not affect this position. The procedure for determining the limiting time in life remains unchanged in the application of this EM update.

Spectrum Analysis

Generally, break spectrum studies (Section A.3.8) are plant-specific in terms of applicability. The break location studies, however, that have typically been included among the break spectrum cases, can be considered generic. Three locations are normally considered for the LBLOCA: the hot leg piping, the cold leg pump suction piping, and the cold leg pump discharge piping. Varied cases using varied EMs (the Westinghouse RESAR for 3411 MWt plants, for example) consistently demonstrate that pump discharge breaks produce the limiting PCT. This conclusion is adequately supported and it will continue to be applied generically, independent of this EM update.

E.3.3. Plant-Specific Studies

Plant-specific sensitivity studies are those studies conducted to ensure that the base assumptions of an EM application are tenable and sufficiently conservative to envelop possible plant system configurations or operations. An example would be the choice of the number of ECCS trains assumed operable in a given application. The nature of these studies alone suggests that they be performed in a plant application and that they cannot be treated on a generic basis.

E.4. Representative Plant Applications

Comparisons of predictions between the approved EM, including the refinements in References 2 and 6, and the proposed EM are presented below. Representative applications are shown for both Westinghouse 3- and 4-loop plants based on current limiting PCT cases.

E.4.1. Westinghouse 4-Loop Plant

The currently approved EM consists of the RELAP5/MOD2-B&W, REFLOD3B, and BEACH computer codes as described in Revision 3 of BAW-10168P-A (Reference 1). The REFLOD3B model was used to calculate the refill and reflood portions of the LBLOCA transient and to provide boundary data for the BEACH core heatup calculation. The updated EM utilizes the RELAP5/MOD2-B&W code to evaluate the entire transient, including the refill and reflood phases.

The RELAP5/MOD2-B&W code is used to predict the reactor coolant system thermal-hydraulic conditions from blowdown through refill and reflood to core quench for the LBLOCA transient. The noding arrangement of the reactor coolant system used in the new RELAP5/MOD2-B&W analysis is shown in Figures E-1 and E-2. A comprehensive discussion of EM changes was presented in Section E.2. The revised plant model incorporates all EM changes. Major differences between the current and revised plant models are:

1) The intact loops are modeled individually, whereas previously the intact loops were lumped together. Loop noding is shown in Figure E-1.

2) Reactor vessel downcomer and lower plenum noding differs for the new EM. The revised noding is shown in Figure E-2. These two regions are represented in enhanced detail, providing a better representation of the void distribution that affects ECC water bypass during blowdown and the system hydrostatic balance during the refill and reflood portions of the transient. The revised downcomer noding provides a means to mechanistically calculate the ECC water bypass from the downcomer via the cold leg nozzle to the break. In addition to greater axial detail, the downcomer below the cold leg nozzle is divided azimuthally into ¾ and ¼ regions. Cold leg/downcomer connections are consistent with the configuration used in the UPTF benchmark analyses documented in Revision 5 of the RELAP5 topical report, BAW-10164.

3) The hot leg noding at the steam generator inlet and the steam generator, inlet plenum are updated. The noding in this region is revised to permit counter-current flow during the reflood portion of the transient. The hot leg pipe is split from the centerline into two parallel volumes, and the inlet plenum is divided into two vertical volumes. This noding is consistent with the UPTF benchmark model documented in BAW-10164, Revision 5.

4) The current EM consists of a hot channel containing the hottest fuel assembly and an average channel representing the remaining fuel assemblies. This two fluid channel representation remains unchanged. The modeling of the heat structures in the core is as described in Reference 6. Unchanged from the current EM, one heat structure is used to model the average core. In the hot fluid channel, two heat structures are used. One structure represents the hottest fuel rod in the hot bundle while the other structure models the remaining fuel rods in the hot bundle. Variable uncertainties are applied to the volume-averaged fuel temperatures. One intent of the standalone RELAP5 LBLOCA EM is to allow use of appropriate radial peaking in the hot channel. However, in this instance, the two hot channel heat structures are both configured using the limiting $F_{\Delta H}$, 1.633.

5) Core crossflow between the hot and average channels is permitted during the entire LBLOCA transient.

The RELAP5 model discussed above is based on a 3411 MWt Westinghouse 4-loop plant configured with "D" steam generators and using a total F_q of 2.5. A plant parameter list is provided in Table E-2. A double-ended guillotine break ($C_D = 1.0$) in the cold leg discharge piping with an axial peak power at the 9.7-ft elevation was selected for the LBLOCA

comparative analysis. This is the limiting PCT case. The model meets the requirements of Appendix K of 10CFR50.46. The following comparative analysis was performed to demonstrate the compatibility of the current and revised EMs.

Analysis predictions are summarized in Tables E-3 and E-4. Table E-3 presents the sequence of events during the LBLOCA. The results of the cladding temperature calculations are presented in Table E-4. In general, the predicted LOCA characteristics between the current and revised EM's are consistent. The PCT result is significantly lower for the new EM, partly because the difference between cases contains the reduced fuel temperature, uncertainty effect (Reference 6). The peak cladding temperatures for the unruptured and ruptured nodes are shown in Figures E-3 and E-4, respectively. It can be seen that the current and revised EMs both predict comparable temperatures near the end of refill. Thus, both EMs, although they have differences in noding and options used, calculate similar thermal responses at the time of core recovery.

Figure E-5 shows that the revised EM calculates a reduced downcomer level due to the mechanistic modeling of the region. This behavior is similar to that seen in UPTF Test 25 (Reference 9). Figure E-6 shows the core collapsed liquid level. Both EMs produce similar core levels through accumulator injection period, after which the revised EM, responding to a drop in downcomer level (see Figure E-5) and a higher integrated core inlet flow (see Figure E-9), predicts a higher level. Figure E-7 compares quench front advancement for the current and proposed EMs. The figure shows that core crossflow between the hot and average channels allows for a faster quench front advancement even though the new option within NEWQUEN tends to slow the quench front advancement. Figure E-8 shows the transient, primary system pressure. The RV side leak flow is increased above the current EM because of the mechanistic ECCS bypass model that allows the ECCS flow to be processed through the break. Integrated flow (from EOB) into and out of the core, as depicted in Figures E-9 and E-10, is increased due to the changes made for the new EM. From Figure E-9, it can be seen that both EMs predict the start of flow into the core at about the same time. Mass flow rates in the hot channel are generally similar to the current EM (Figure E-11), while Figure E-12 indicates that carryout is slightly higher with the new EM. Model performance is appropriate. Trends between the current and revised EM are comparable.

E.4.2. Westinghouse 3-Loop Plant

A Westinghouse 3-loop plant model was developed and used to assess the performance of the standalone RELAP5 EM. The noding description of the reactor coolant system is shown in Figures E-13 and E-14. The model is consistent with the 4-loop model and the various benchmarks presented in Revision 5 of the RELAP5 topical report. Plant model differences are the same as previously mentioned for the 4-loop plant model, excepting:

1. Core heat structures are configured per Reference 6. In both comparative cases, different radial peaking factors are applied to the two hot channel heat structures. The limiting $F_{\Delta H}$, 1.60, is used for the hot pin, while the hot assembly is based on a cycle-specific, operational limit, hot bundle factor of 1.45. Variable, initial fuel temperatures are applied to both cases.

The RELAP5 model is based on a 2893 MWt Westinghouse 3-loop plant configured with "51" steam generators and using a total F_q of 2.19. The representative model is a T_{HOT} type plant. A plant parameter list is provided in Table E-5. A double-ended guillotine break ($C_D = 0.6$) in the cold leg discharge piping with an axial peak power at the 9.7-ft elevation was selected for the LBLOCA comparative analysis. This is the limiting PCT case.

Figure E-13 shows core nodalization and Figure E-14 shows loop nodalization. The intact loops are individually represented. The downcomer below the cold leg nozzle is divided azimuthally into two-thirds and one-third regions (see Figure E-13). Loops 2 (intact) and 3 (broken) are connected to the two-thirds region, and loop 1 (intact) is connected to the one-third region. The arrangement is consistent with the four-loop configuration used in the UPTF benchmark analysis. The model meets the requirements of Appendix K and 10CFR50.46. The following comparative analysis was performed to demonstrate the compatibility of the current and revised EMs.

The results of the comparative analysis are summarized in Tables E-6 and E-7. Table E-6 presents time sequence of events during the LBLOCA, and the results of the cladding temperature calculations are presented in Table E-7. In general, the predicted LOCA characteristics between the two EM's are consistent. The PCTs for the unruptured and ruptured locations are presented in Figures E-15 and E-16, respectively. The PCT for the new EM is less than that for the current EM. Again, both cases predict similar temperatures near the end of refill, calculating, irrespective of noding and option differences, comparable thermal responses at the time of core recovery.

As in the 4-loop case, Figure E-17 shows the revised EM predicts a reduced downcomer level. Figure E-18 shows the core collapsed liquid level. Figure E-19 compares quench front advancement. Despite crossflow between the hot and average fluid channels, the progression of the quench front is slowed in the revised EM consistent with the new option within NEWQUEN. Figure 20 shows the transient, primary system pressure. The RV side leak flow is increased above the current EM because of the mechanistic ECCS bypass model that allows the ECCS flow to be processed through the break. Integrated flow (from EOB) into the core, as depicted in Figures E-21 is decreased; the integrated core outlet flows shown in Figure 22 are comparable. From Figure E-21, it can be seen

that both EMs predict the start of flow into the core at about the same time. Mass flow rates in the hot channel are generally similar to the current EM (Figure E-23), while Figure E-24 indicates that carryout is significantly higher with the revised EM.

The oscillatory behavior in the new EM caused a delay in the bottom-of-core recovery (BOCREC). The oscillatory phenomenon is also predicted in the UPTF benchmark in BAW-10164, Revision 5. The overall cladding temperature responses of the two EM's are compatible, and the results in Table E-7 demonstrate that both the new EM and the current EM are conservative and acceptable for LBLOCA applications. The unruptured PCT location is limiting and substantially below the 10CFR50.46 limit.

E.5. Summary

FTI has improved its LBLOCA EM. The REFLOD3B computer code was removed from the LBLOCA code package. The entire LBLOCA transient is now predicted using the RELAP5 computer code—a full system, dynamically coupled analysis is performed through reflood to core quench. The standalone RELAP5 EM was developed, perfected, and shown appropriate through UPTF, SCTF, and REBEKA benchmarks documented in Revision 5 of the RELAP5 topical report, BAW-10164. Details of the EM revisions are discussed in Section E.2. Table E-1 displays appropriate user-inputs for use with the new EM. Representative 3- and 4-loop licensing application cases were run and compared to the existing EM. Noding for the 3- and 4-loop application cases is self-consistent as well as consistent with the benchmark cases. The application cases demonstrate appropriate model performance. Trends between the current and revised EM are comparable. The model meets the requirements of Appendix K and 10CFR50.46, showing margin to the PCT criterion for limiting cases.

E.6. References

1. BAW-10168P-A, "RSG LOCA, BWNT Loss-of-Coolant Accident Evaluation Model for Recirculating Steam Generator Plants," Revision 3, December 1996.

2. BAW-10164P, "RELAP5/MOD2-B&W, An Advanced Computer Program for Light Water Reactor LOCA and Non-LOCA Transient Analysis," Revision 4, September 1999.

3. BAW-10171P-A, "REFLOD3B, Model for Multinode Core Reflooding Analysis," Revision 3, December 1995.

4. BAW-10166P-A, "BEACH, Best Estimate Analysis Core Heat Transfer, A Computer Program for Reflood Heat Transfer During LOCA," Revision 4, February 1996.

5. BAW-10192P-A, "BWNT LOCA, BWNT Loss-of-Cooling Accident Evaluation Model for Once-Through Steam Generator Plants," Revision 0, June 1998.

6. J. J. Kelly, FTI, to Document Control Desk, NRC, "Modeling Refinements to Framatome Technologies' RELAP5-Based, Large Break LOCA Evaluation Models—BAW-10168 for Non-B&W-Designed, Recirculating Steam Generator Plants and BAW-10192 for B&W-Designed, Once-Through Steam Generator Plants," FTI-00-551, February 29, 2000.

7. NUREG/CR-5254, "Bias in Peak Clad Temperature Predictions Due to Uncertainties in Modeling of ECC Bypass and Dissolved Non-Condensable Gas Phenomena, " Brookhaven National Laboratory, September 1990.

8. "Chemical Engineers Handbook," Perry and Green, 6th Edition, McGraw-Hill, 1984.

9. "Upper Plenum Test Facility—UPTF—Test No. 25 Downcomer/Cold Leg Steam/Water Interaction Test," Siemens AG, KWU, E 314/90/13, September 1990.

Table E-1: User-Inputs for the Revised LBLOCA EM

Parameter	Index	Value
Reflooding Phase of LOCA using RELAP5	Cl_{151}	> 1.5 (Yes)
Reverse Form Loss in Downcomer/Lower Head		10^6
Forward and Reverse Form Loss in Core Crossflow Junctions		100
Core Nodes after Reflood Trip Activates		Non-Equilibrium
Core Axial Junctions after Reflood Trip Activates		Non-Homogeneous
Steam Generator Tube Inlet Junctions after Reflood Trip Activates		Homogeneous
CCFL Coefficients after Reflood Trip Activates – Core Exit		m = 1.0, c = 0.8
Pump Rotor after Reflood Trip Activates		Locked
ECC Water-Steam Interaction ΔP Penalty		0 – Mechanistically Modeled
UPTF End-of-Bypass Correlation Option		No
Rupture Droplet Breakup Calculation		Yes
Rupture Form Loss		No
Closed Gap or Contact Calculation		Yes
One Lower and Upper Unheated Segment		Yes
Axial Expansion Model		Yes
Distributed Rupture Option	Cl_{160}	> 2.0 (Yes)
Rupture Blockage Multiplier	Cl_{161}	1.0
VELMULT Multiplier	Cl_{164}	1000
	Cl_{167}	1000
	Cl_{170}	1000
η_{max} Multiplier	Cl_{163}	1.0
	Cl_{166}	1.0
	Cl_{169}	1.0
C_{maxDB} Multiplier	Cl_{162}	10
	Cl_{165}	10
	Cl_{168}	10
Variation from Rupture Temperature	Cl_{171}	27.778 K (50 °F)
Interphase Heat Transfer Weighting Factor Before/After Reflood Trip		0.90 / 0.0
Multiplier on Interphase Heat Transfer Weighting	Cl_{173}	10^{-9}
Vapor Void Fraction and Quality Multiplier – Downcomer/Lower Plenum	Cl_{172}	10^{-3}
Minimum Void Fraction Limit to set U_g to $U_{g,sat}$	Cl_{174}	≥ 1.5 (Yes)
When $\alpha_g \leq Cl_{175}$ and 0 < Pressure < 10^6 Pa	Cl_{175}	10^{-4}
Wilson Drag Model Multipliers using Void Difference Threshold for Curve Smoothing at 0.5 – SG Inlet Plenum		Default (1.0)
Wilson Interphase Drag Multipliers – Downcomer/Lower Plenum		0.01 – Slug/Inverted Slug
		0.001 – Bubbly/Annular Mist
		1.0 – Slug Velocity
Wilson Interphase Heat Transfer Multipliers – Downcomer/Lower Plenum	Cl_{153}	1.1 – Bubbly
	Cl_{154}	1.1 – Slug
	Cl_{155}	1.1 – Annular Mist
	Cl_{156}	1.1 – Inverted Annular
	Cl_{157}	1.1 – Inverted Slug
	Cl_{158}	1.1 – Mist
Quench Front Enhancement (NEWQUEN) Option Modifications using Input Option MULTCHNG	C_{Q80}	2.00
	C_{Q81}	0.05
	C_{Q116}	0.50
	C_{Q117}	0.90

Table E-2: Plant Parameters and Initial Conditions—9.7-ft Peak Power.

Westinghouse 4-Loop Plant

Reactor Core Power (102%), MWt	3479.2
Peak Linear Power, kw/ft	13.51
Total Peaking Factor, F_q	2.5
K_Z	0.98
Hot Pin Radial Peaking Factor	1.633
Hot Assembly Radial Peaking Factor	1.633
Axial Peaking Factor	1.5
Axial Peak Power Elevation, ft	9.705
Fuel Assembly	17x17 Mark-BW, Zr_4 Clad
Number of Fuel Assemblies	193
Primary System Flow, gpm	385,000
Total Bypass Flow, %	7.5
Total Spray Nozzle Flow, %	4.38
RCS Average Temperature, F	582
Pressurizer Pressure, psia	2275
Pressurizer Level, %	60
Steam Generator Pressure, psia	897
Steam Generator Tube Plugging, %	10

Locations are measured from the bottom of the active core; the bottom of the active core is the zero elevation.

Table E-3: Sequence of Events—DECLG Break w/C_D = 1.0, 9.7-ft Peak Power.

Westinghouse 4-Loop Plant

	Time Sequence of Events, s	
	Current EM	**New EM**
Break Initiation	0.0	0.0
Accumulator Injection	11	~12
End of Blowdown	22.43	26.288
Bottom of Core Recovery	32.821	~38
Pumped ECCS Injection	39.4	39.5

Table E-4: LOCA Summary—DECLG Break w/C_D = 1.0, 9.7-ft Peak Power.

Westinghouse 4-Loop Plant

	Current EM [1]	New EM
Hot Bundle		
Rupture Volume Location, ft	9.705	9.705
Rupture Time, s	57.8	67.2
Rupture Volume PCT, F	1827	1630
Rupture Volume PCT Time, s	222	67.5
Unruptured Volume Location, ft	8.565	8.565
Unruptured Volume PCT, F	2174	1741
Unruptured Volume PCT Time, s	221	96
Maximum Local Oxidation, %	7.65	1.22
Maximum Local Oxidation Location, ft	8.565	8.565
Hot Pin		
Rupture Volume Location, ft	N/A	9.705
Rupture Time, s	N/A	65.8
Rupture Volume PCT, F	N/A	1637
Rupture Volume PCT Time, s	N/A	61.3
Unruptured Volume Location, ft	N/A	8.565
Unruptured Volume PCT, F	N/A	1753
Unruptured Volume PCT Time, s	N/A	95.7
Maximum Local Oxidation, %	N/A	1.27
Maximum Local Oxidation Location, ft	N/A	8.565
Average Core		
PCT Volume Location, ft	9.705	9.705
PCT, F	1603	1435
PCT Time, s	164	150

[1] The hot assembly is composed of all hot fuel pins; there is no hot pin heat structure.

Locations are measured from the bottom of the active core; the bottom of the active core is the zero elevation.

Table E-5: Plant Parameters and Initial Conditions—9.7-ft Peak Power.

Westinghouse 3-Loop Plant

Reactor Core Power (102%), MWt	2950.9
Peak Linear Power, kw/ft	12.99
Total Peaking Factor, F_q	2.19
K_Z	0.95
Hot Pin Radial Peaking Factor	1.6
Hot Assembly Radial Peaking Factor	1.45
Axial Peaking Factor	1.37
Axial Peak Power Elevation, ft	9.705
Fuel Assembly	17x17 Mark-BW, M5 Clad
Number of Fuel Assemblies	157
Primary System Flow, gpm	288,300
Total Bypass Flow, %	6.5
Total Spray Nozzle Flow, %	0.17
RCS Average Temperature, F	586
Pressurizer Pressure, psia	2250
Pressurizer Level, %	64.5
Steam Generator Pressure, psia	844
Steam Generator Tube Plugging, %	7

Locations are measured from the bottom of the active core; the bottom of the active core is the zero elevation.

Table E-6: Sequence of Events – DECLG Break w/C_D = 0.6, 9.7-ft Peak Power.

Westinghouse 3-Loop Plant

	Time Sequence of Events, s	
	Current EM	**New EM**
Break Initiation	0.0	0.0
Accumulator Injection	12.0	12.2
End of Blowdown	19.0	21.9
Bottom of Core Recovery	30.5	~34
Pumped ECCS Injection	30.2	30.2

Table E-7: LOCA Summary—DECLG Break w C_D = 0.6, 9.7-ft Peak Power.

Westinghouse 3-Loop Plant

	Current EM	New EM
Hot Bundle		
Rupture Volume Location, ft	8.565	9.705
Rupture Time, s	99	85
Rupture Volume PCT, F	1678	1699
Rupture Volume PCT Time, s	195	86
Unruptured Volume Location, ft	10.275	8.565
Unruptured Volume PCT, F	2140	1921
Unruptured Volume PCT Time, s	284	154
Maximum Local Oxidation, %	5.6	3.2
Maximum Local Oxidation Location, ft	10.275	8.565
Hot Pin		
Rupture Volume Location, ft	8.565	9.705
Rupture Time, s	85	65
Rupture Volume PCT, F	1709	1700
Rupture Volume PCT Time, s	195	66
Unruptured Volume Location, ft	10.275	8.565
Unruptured Volume PCT, F	2170	2019
Unruptured Volume PCT Time, s	284	154
Maximum Local Oxidation, %	6.1	4.5
Maximum Local Oxidation Location, ft	10.275	8.565
Average Core		
PCT Volume Location, ft	10.275	10.275
PCT, F	1430	1579
PCT Time, s	162	153

Locations are measured from the bottom of the active core; the bottom of the active core is the zero elevation.

FIGURE E-1. RELAP5 Loop Noding Diagram - Westinghouse 4 - Loop Plant.

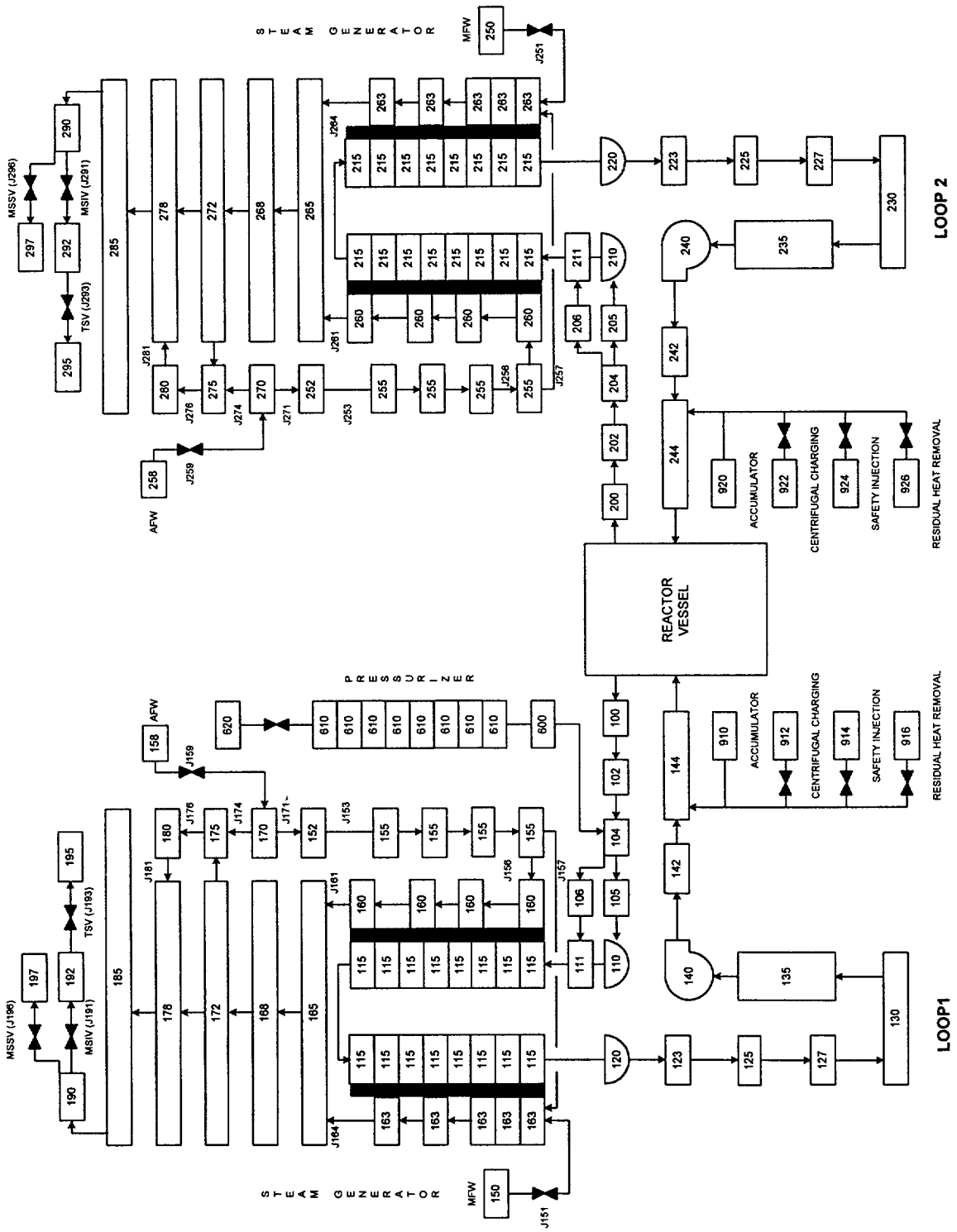

FIGURE E-1 (continued). RELAP5 Loop Noding Diagram - Westinghouse 4 - Loop Plant.

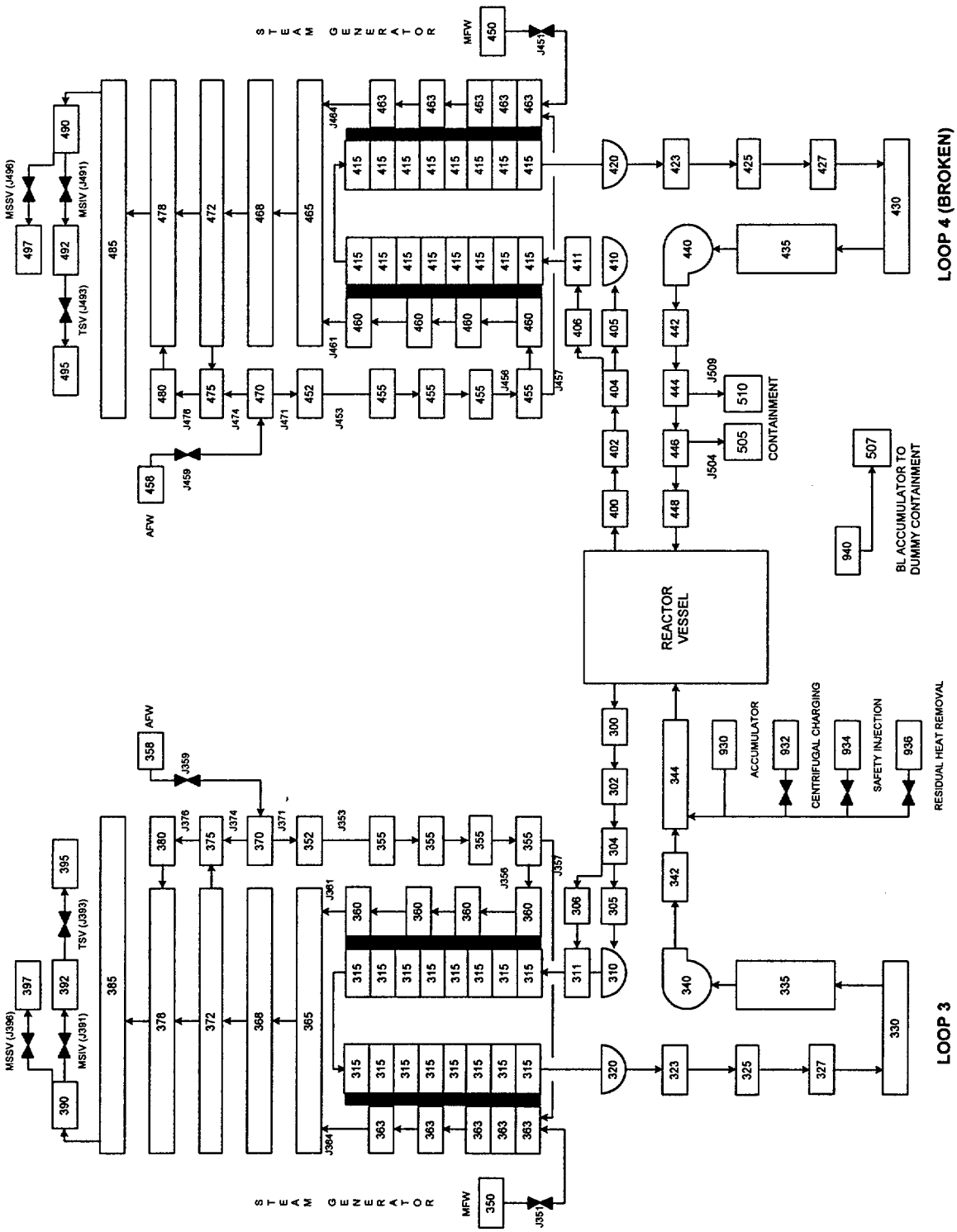

FIGURE E-2. RELAP5 Core Noding Diagram - Westinghouse 4 - Loop Plant.

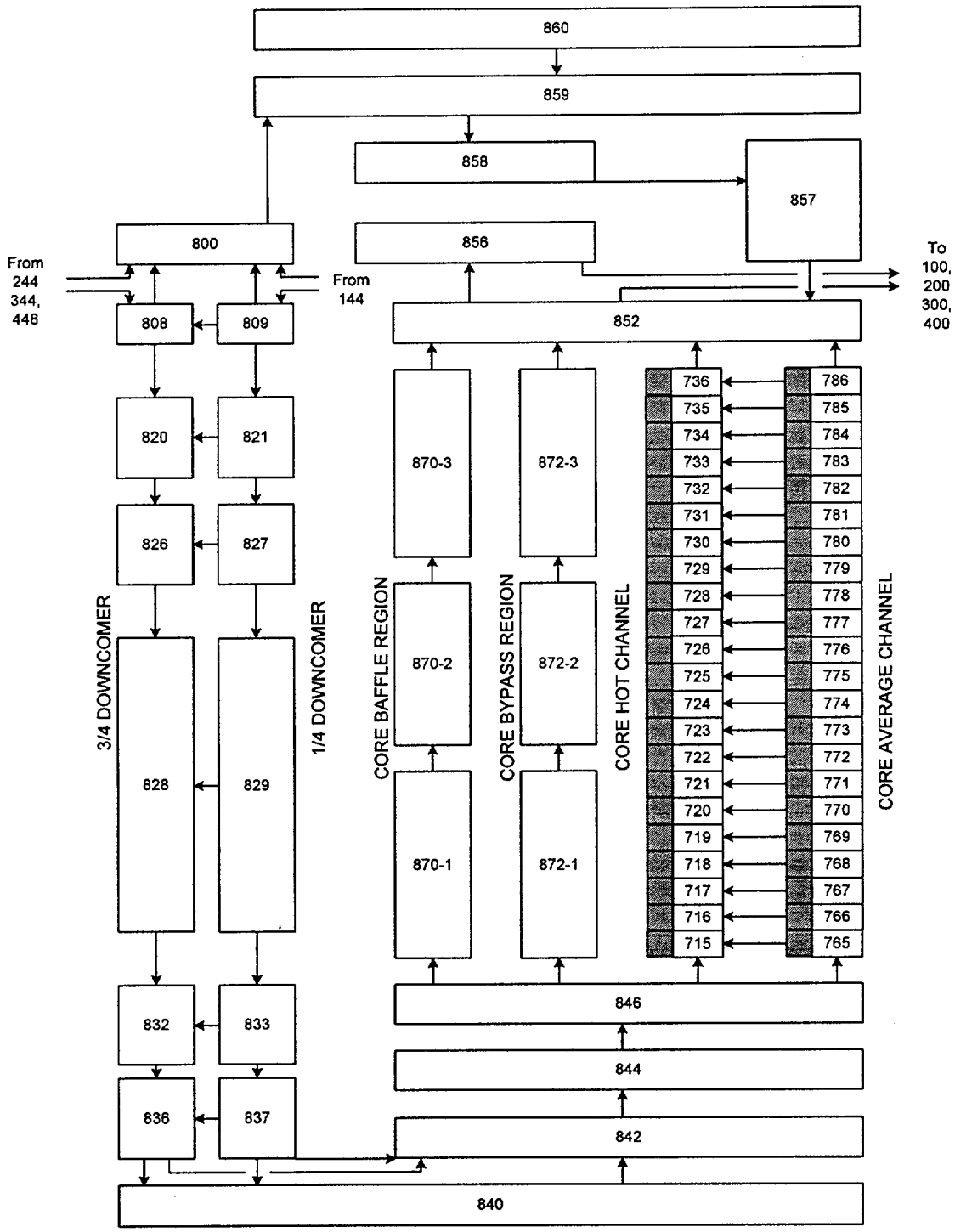

FIGURE E-3. Unruptured Node PCT
10-ft Axial Peak.

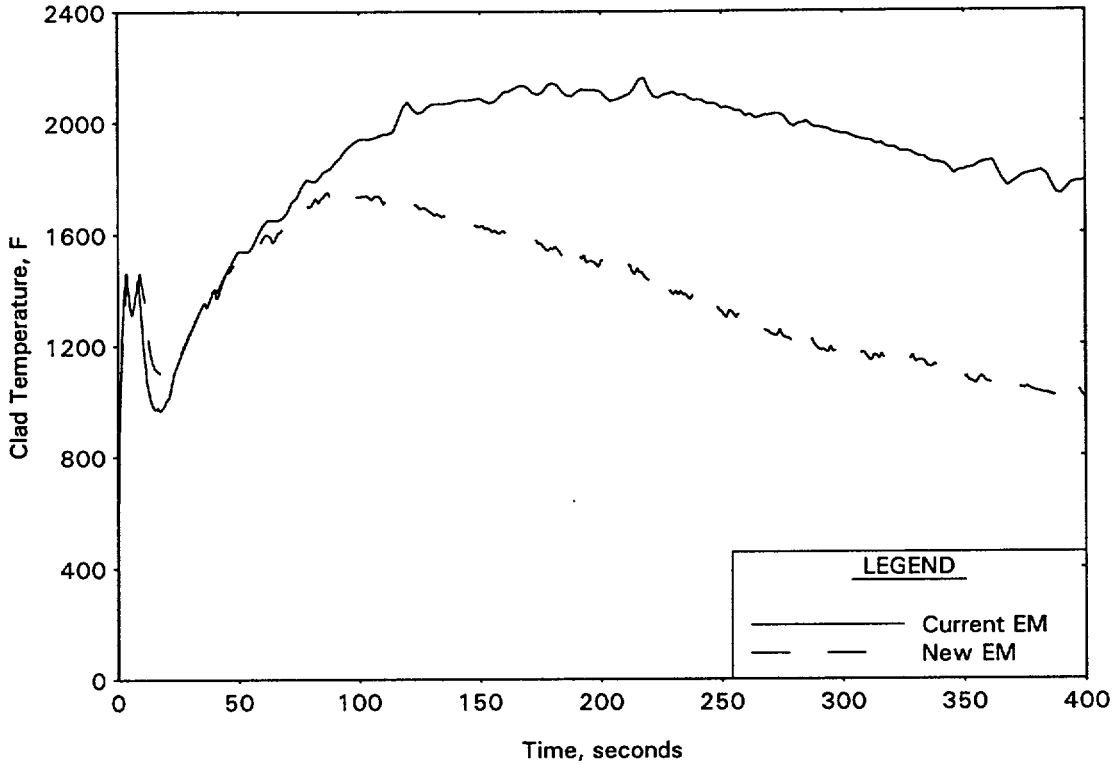

FIGURE E-4. Ruptured Node PCT
10-ft Axial Peak.

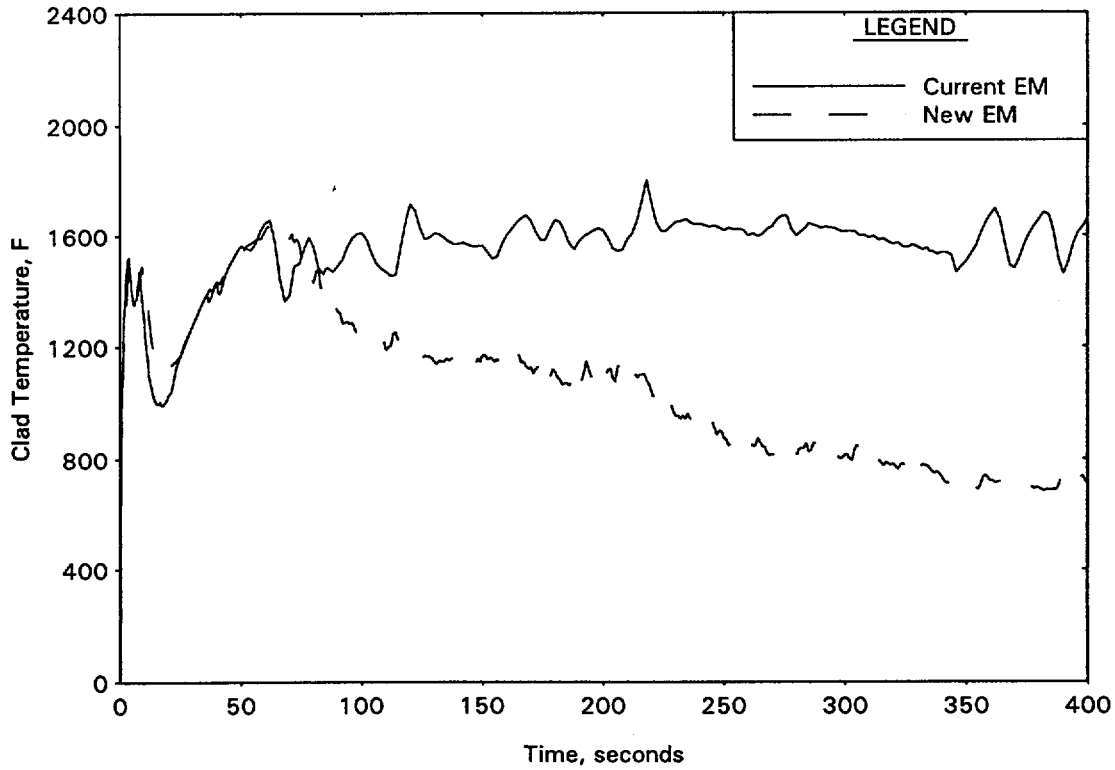

FIGURE E-5. RV Downcomer Level
10-ft Axial Peak.

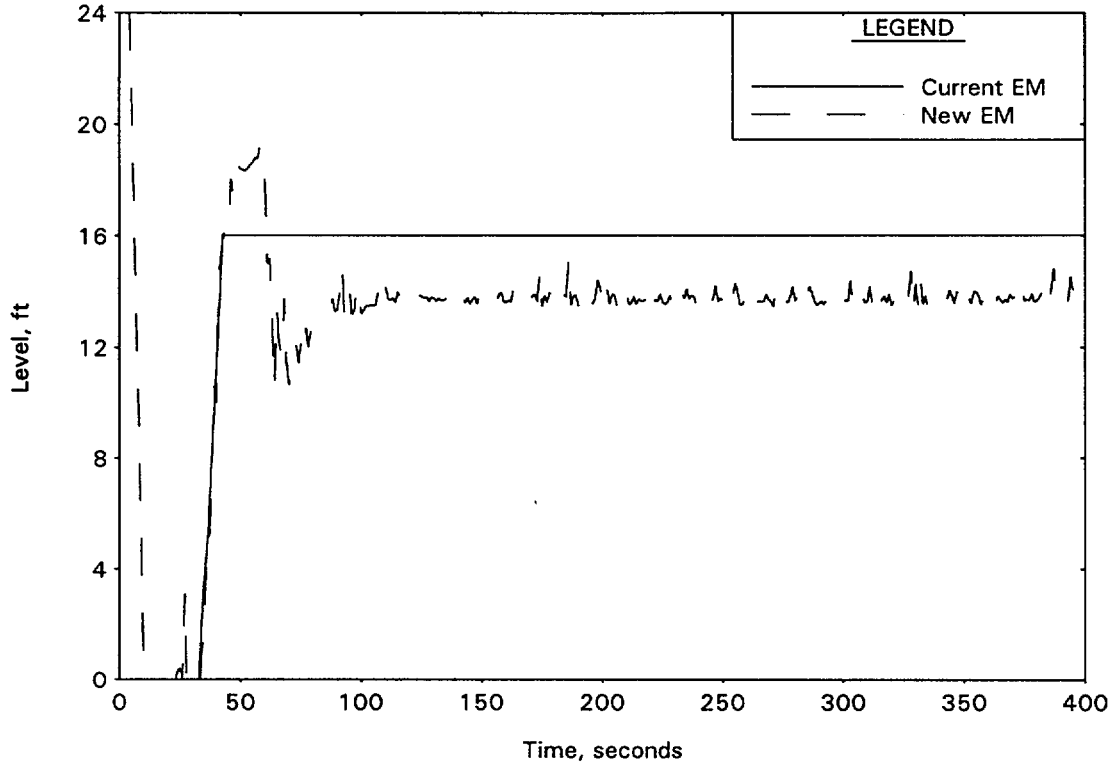

FIGURE E-6. Core Collapsed Level
10-ft Axial Peak.

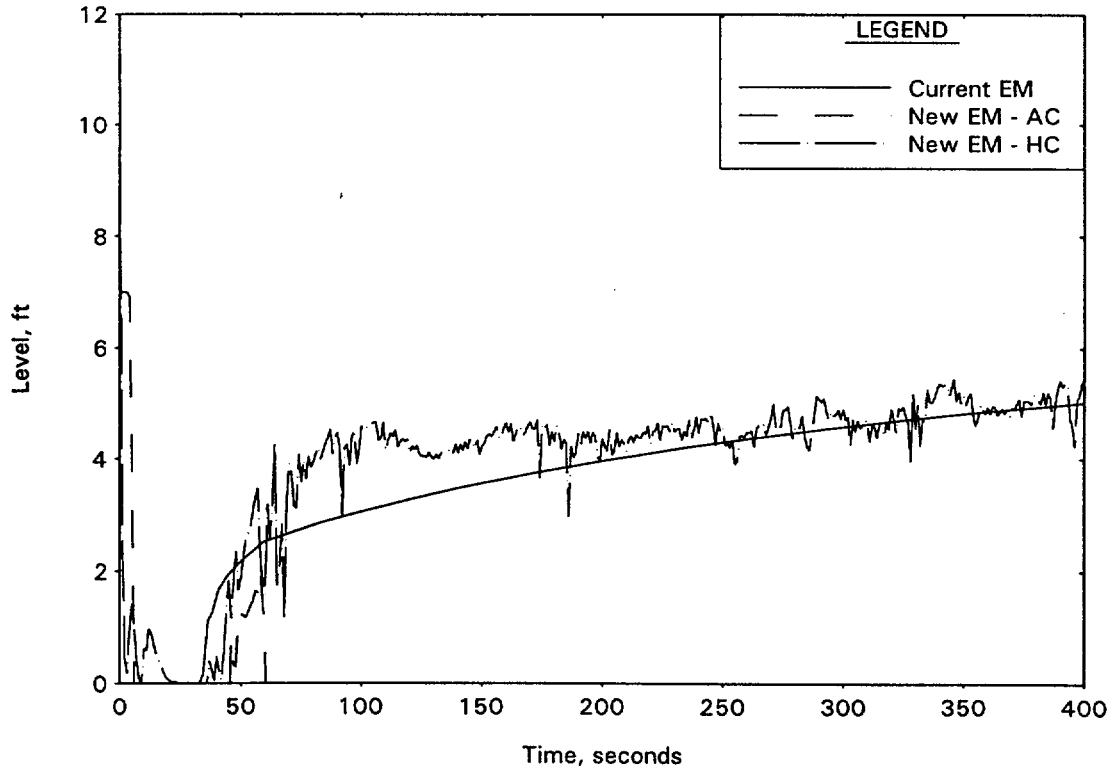

FIGURE E-7. Hot Channel Quench Front
10-ft Axial Peak.

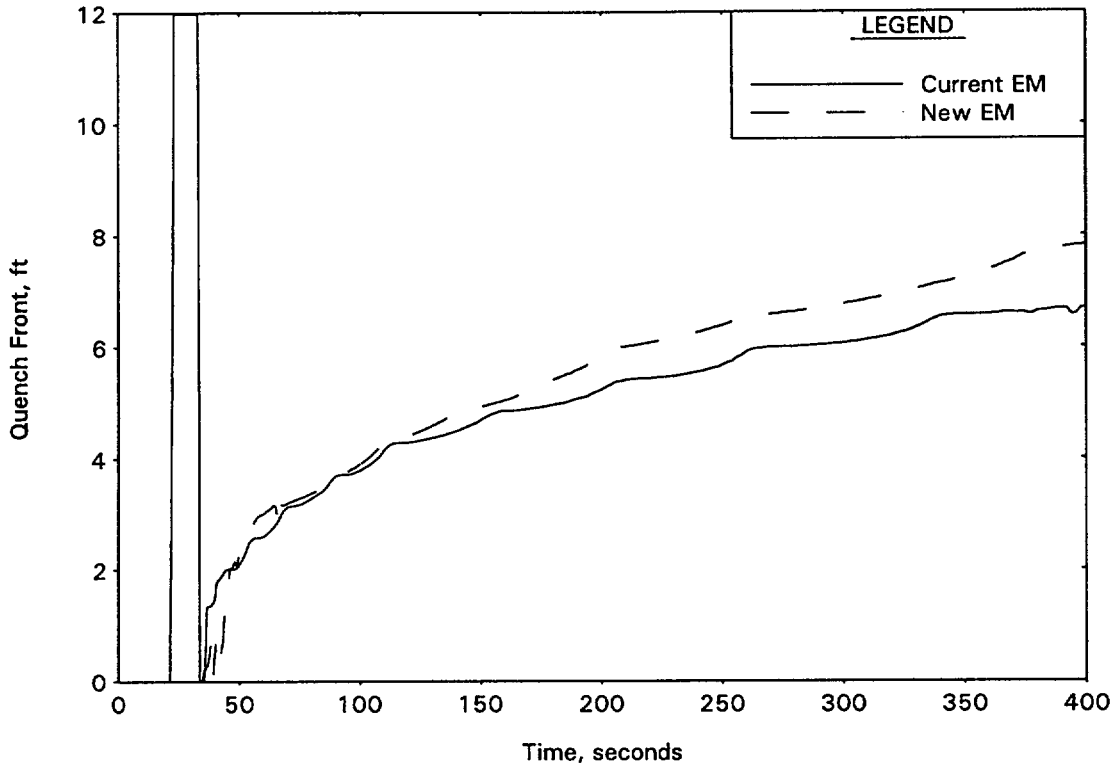

FIGURE E-8. RV Upper Plenum Pressure
10-ft Axial Peak.

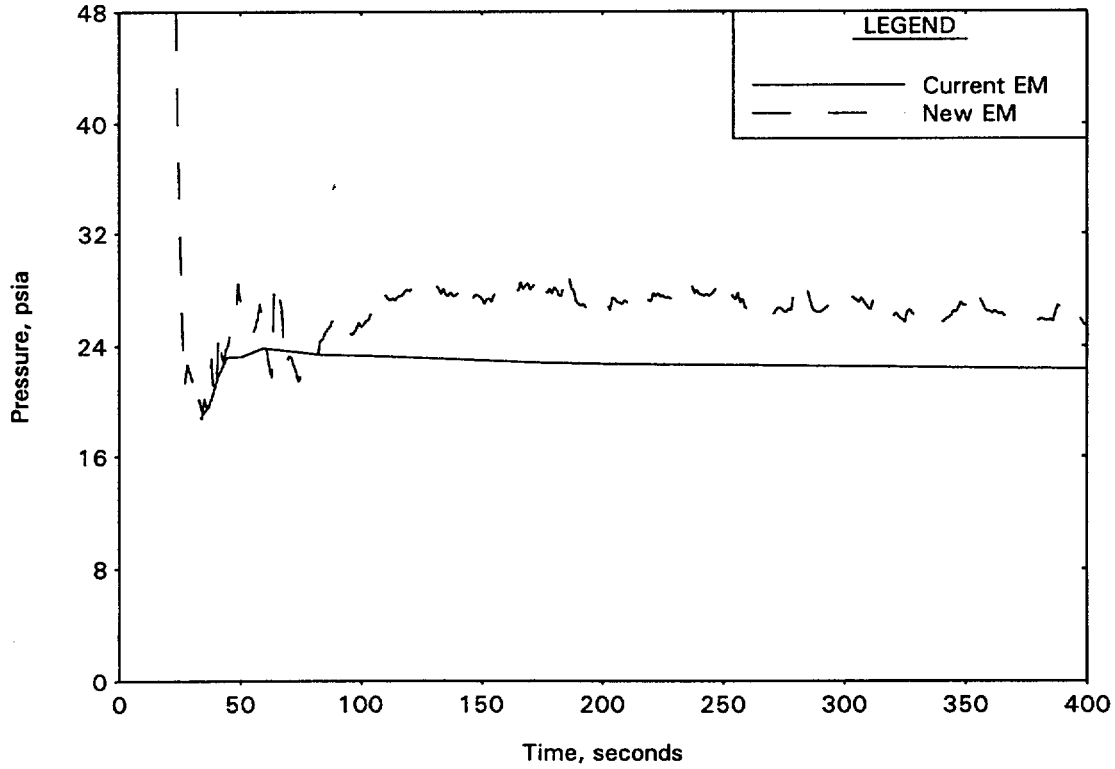

FIGURE E- 9. Integrated Core Inlet Flow
10-ft Axial Peak.

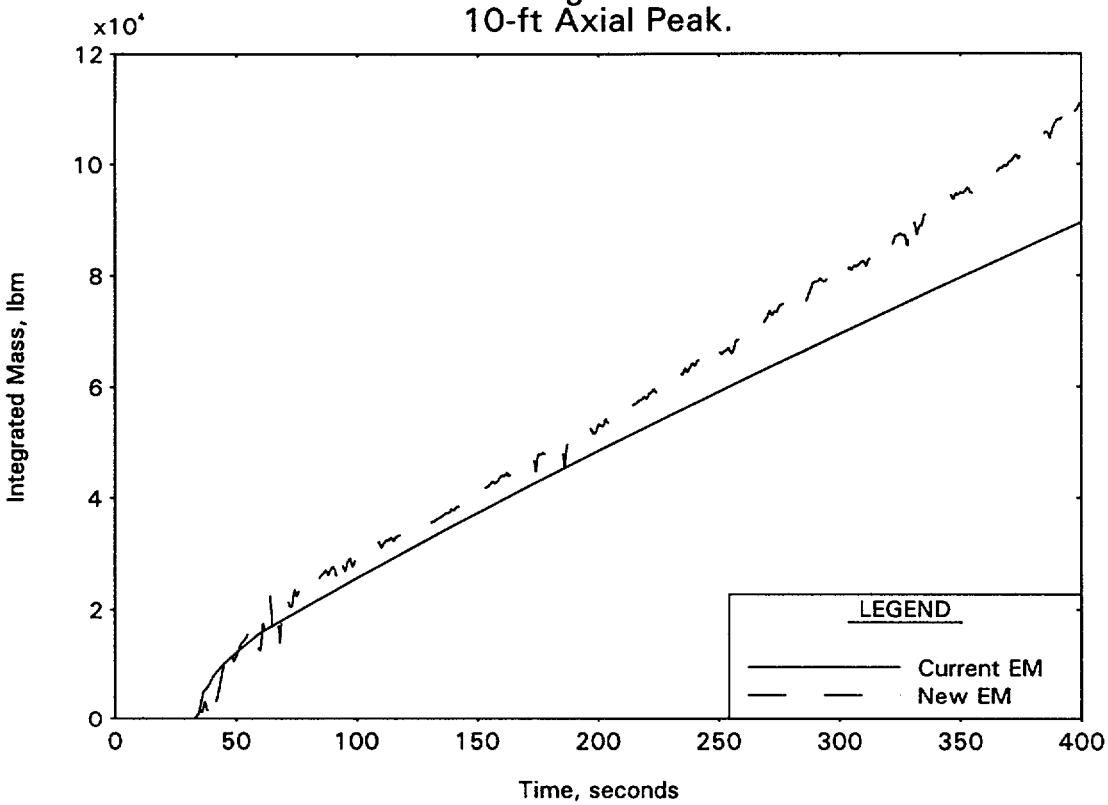

FIGURE E-10. Integrated Core Outlet Flow
10-ft Axial Peak.

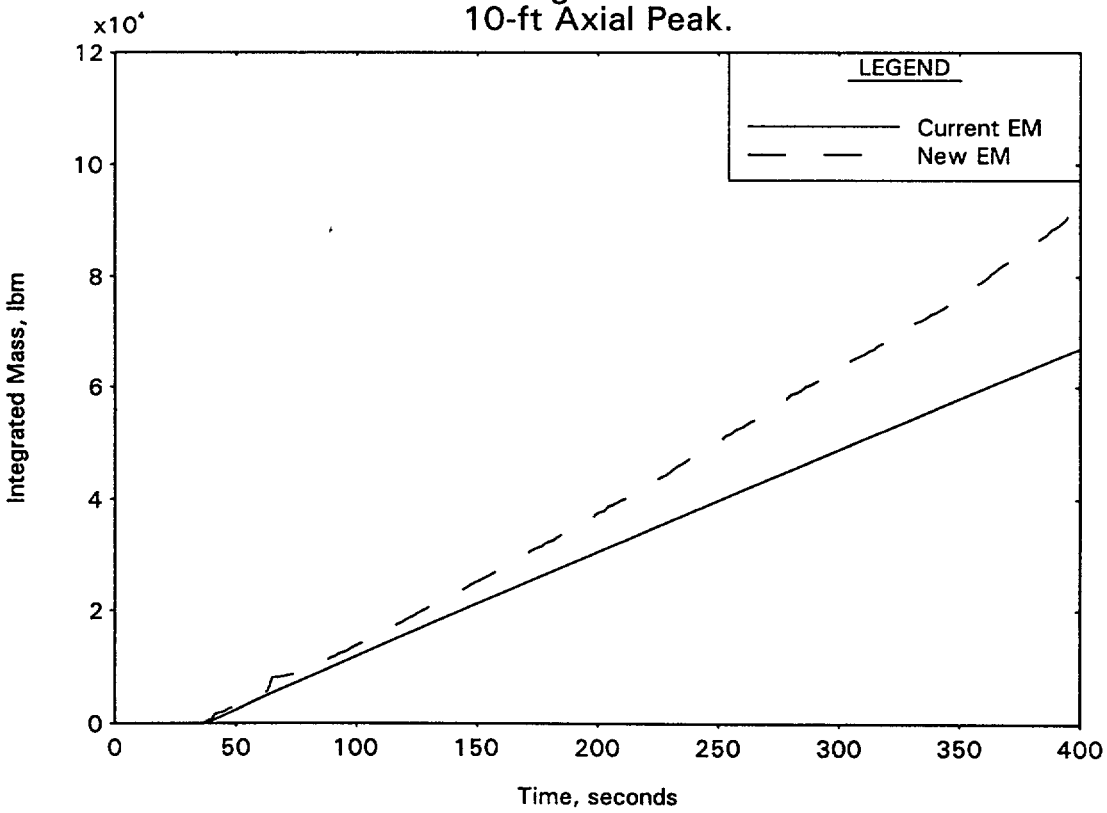

FIGURE E-11. Hot Channel Mass Flow
10-ft Axial Peak.

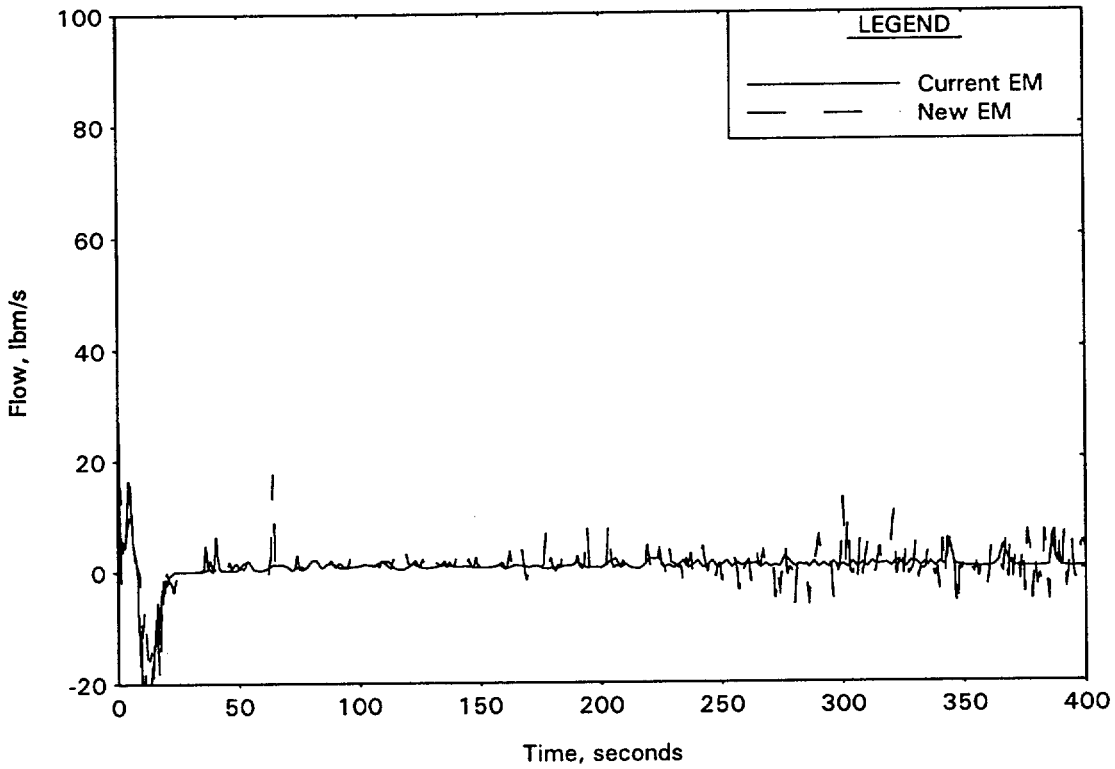

FIGURE E-12. Integrated CRF
10-ft Axial Peak.

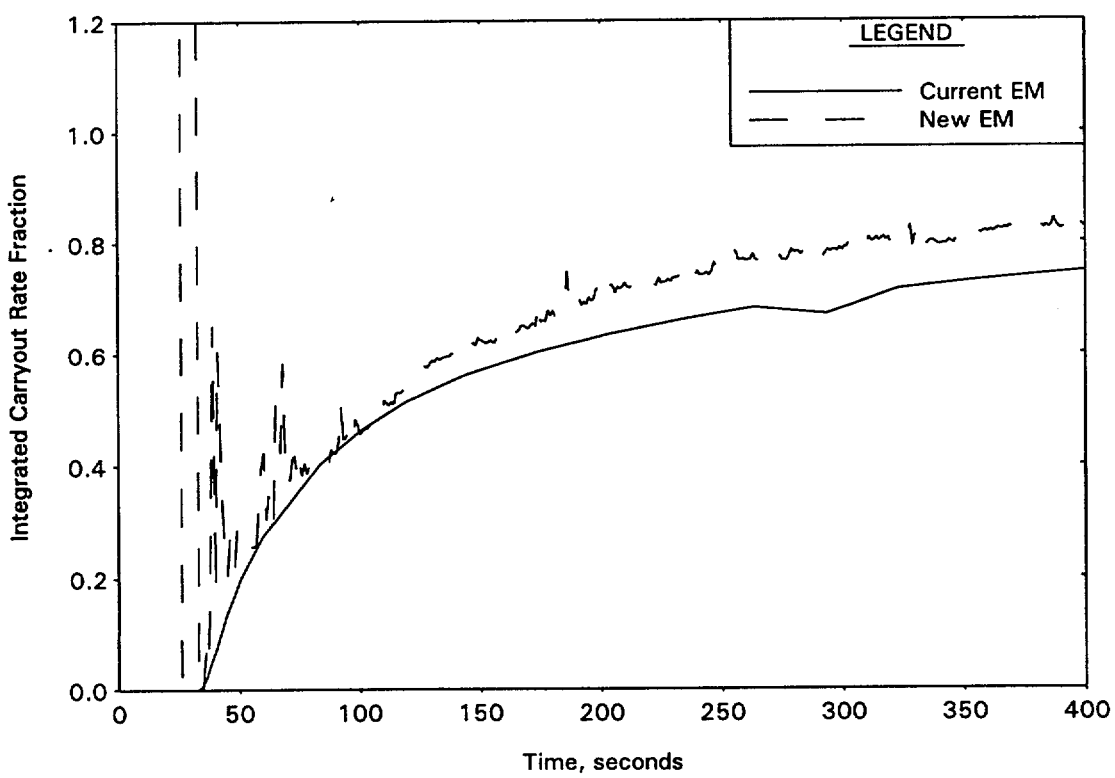

FIGURE E-13. RELAP5 Core Noding Diagram - Westinghouse 3 - Loop Plant.

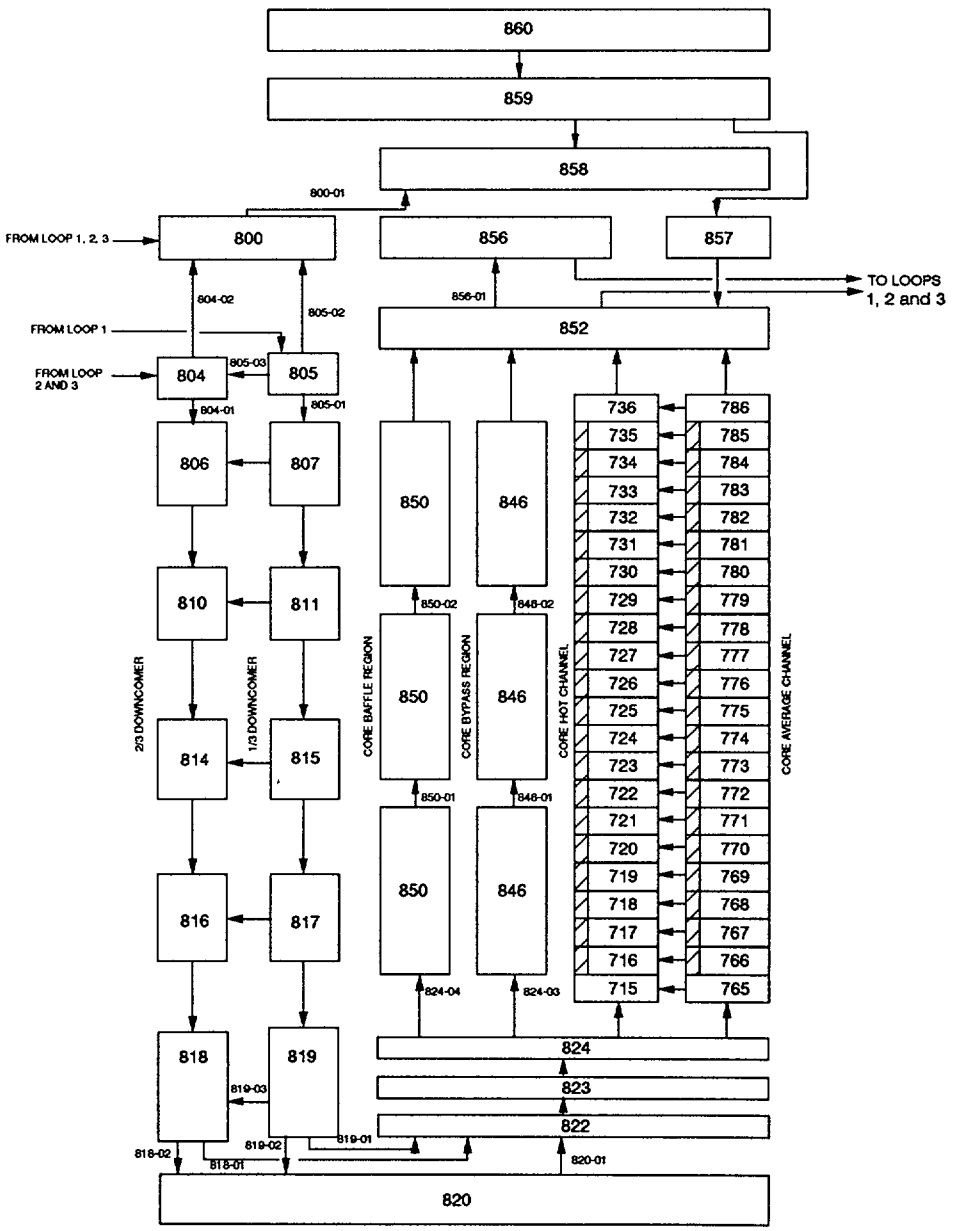

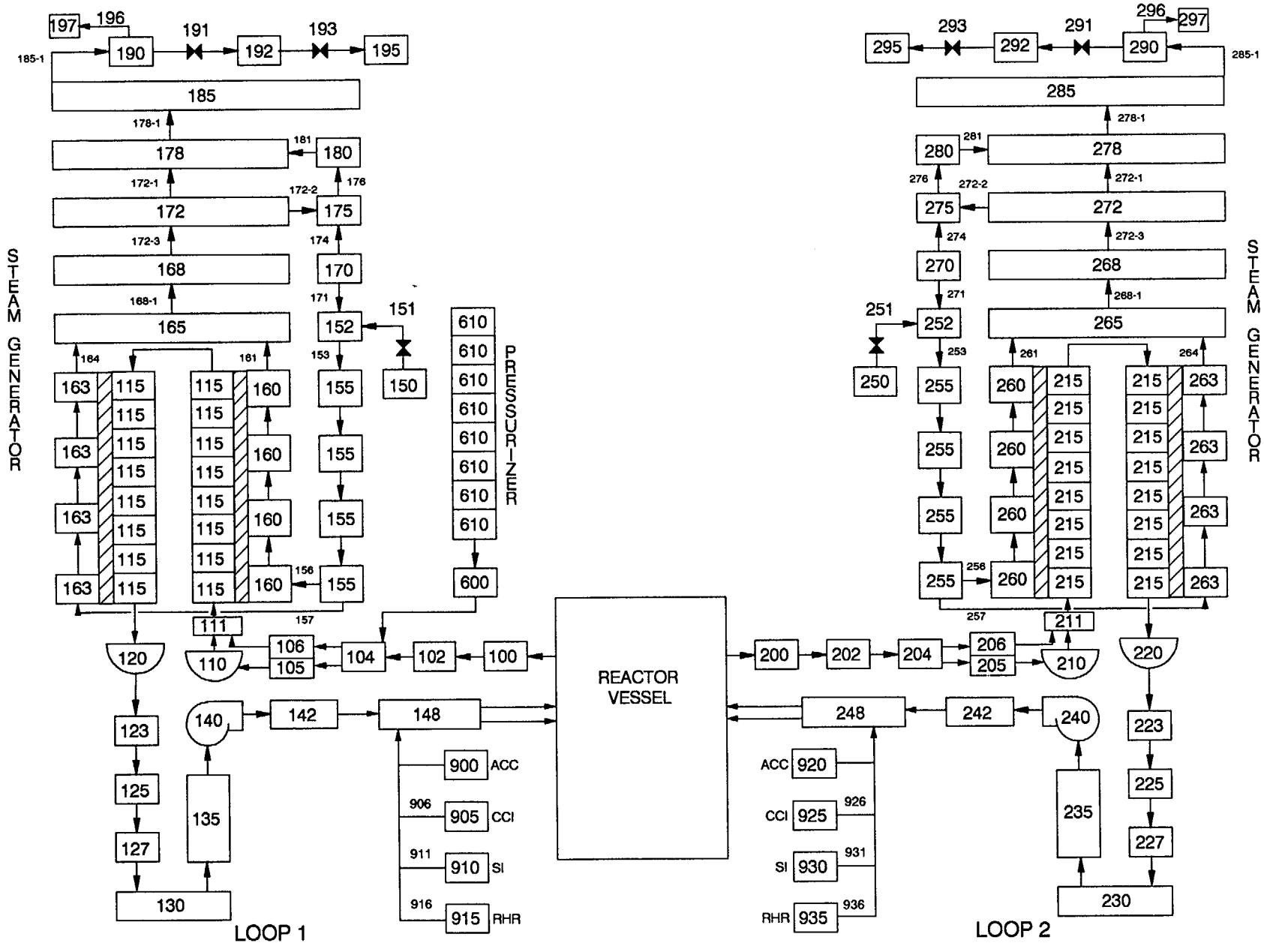

FIGURE E-14. RELAP5 Loop Noding Diagram - Westinghouse 3 - Loop Plant.

FIGURE E-14 (continued). RELAP5 Loop Noding Diagram - Westinghouse 3 - Loop Plant.

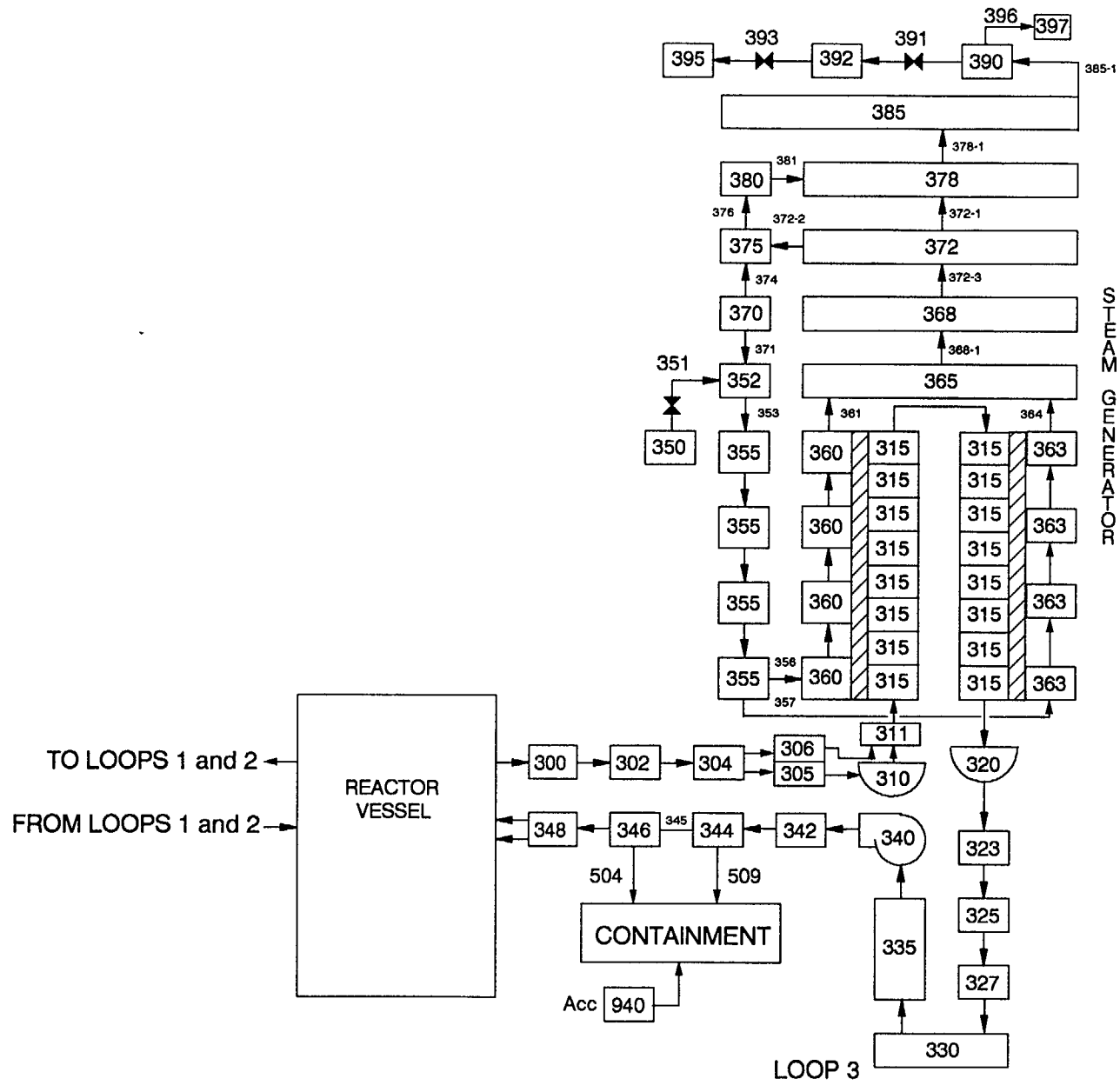

FIGURE E-15. Unruptured Node PCT
10-ft Axial Peak.

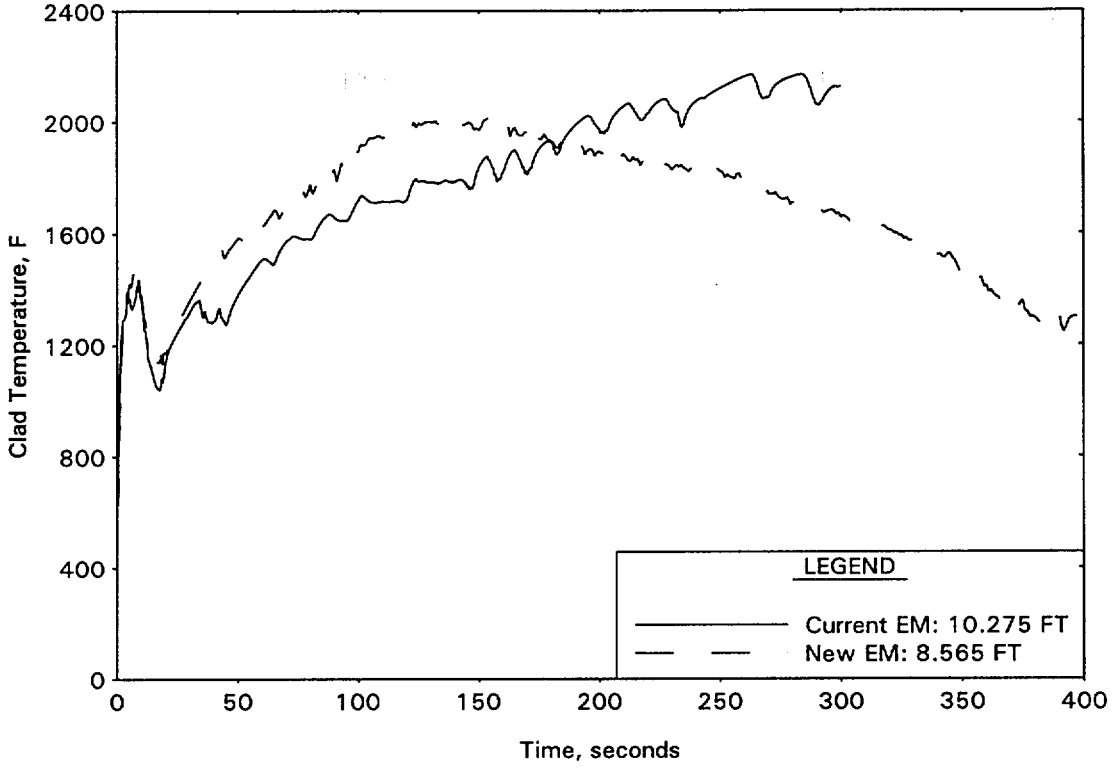

FIGURE E-16. Ruptured Node PCT
10-ft Axial Peak.

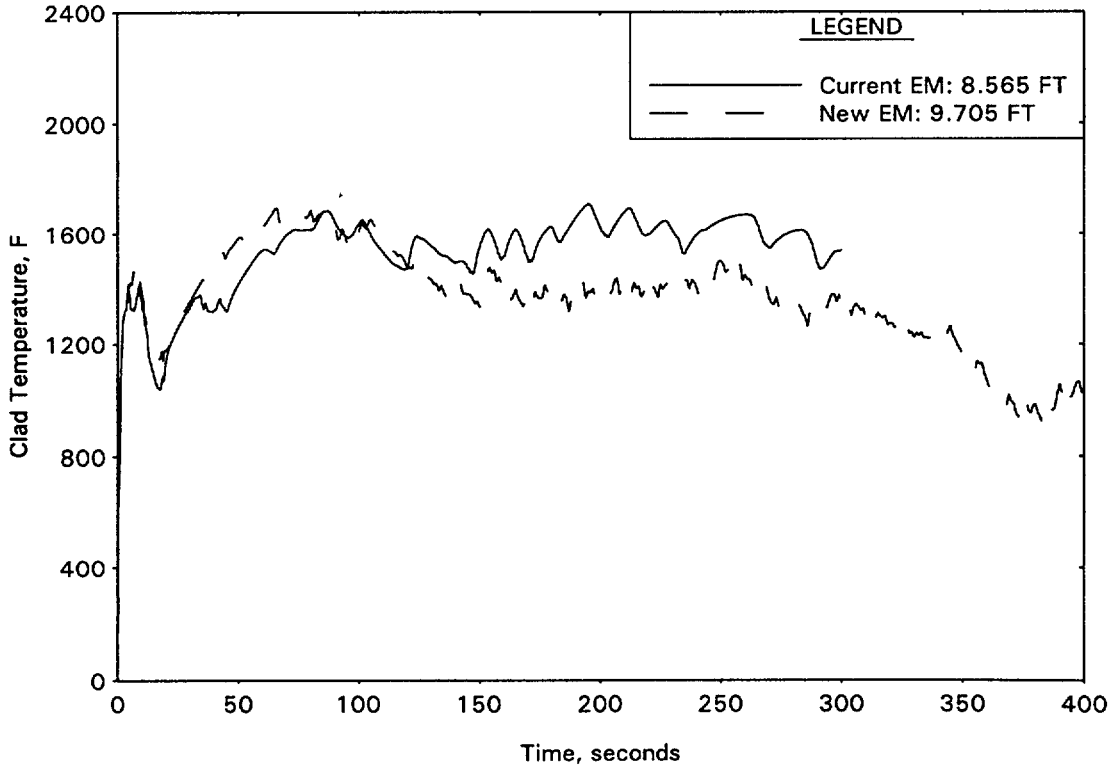

FIGURE E-17. RV Downcomer Level
10-ft Axial Peak.

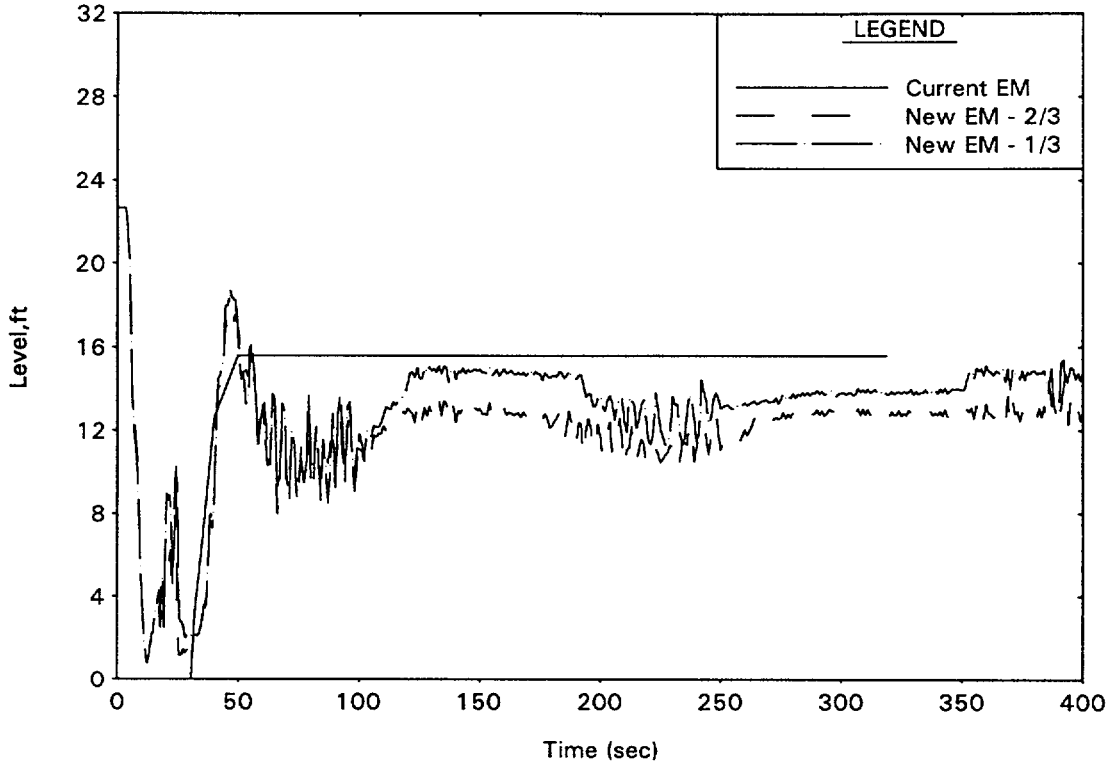

FIGURE E-18. Core Collapsed Level
10-ft Axial Peak.

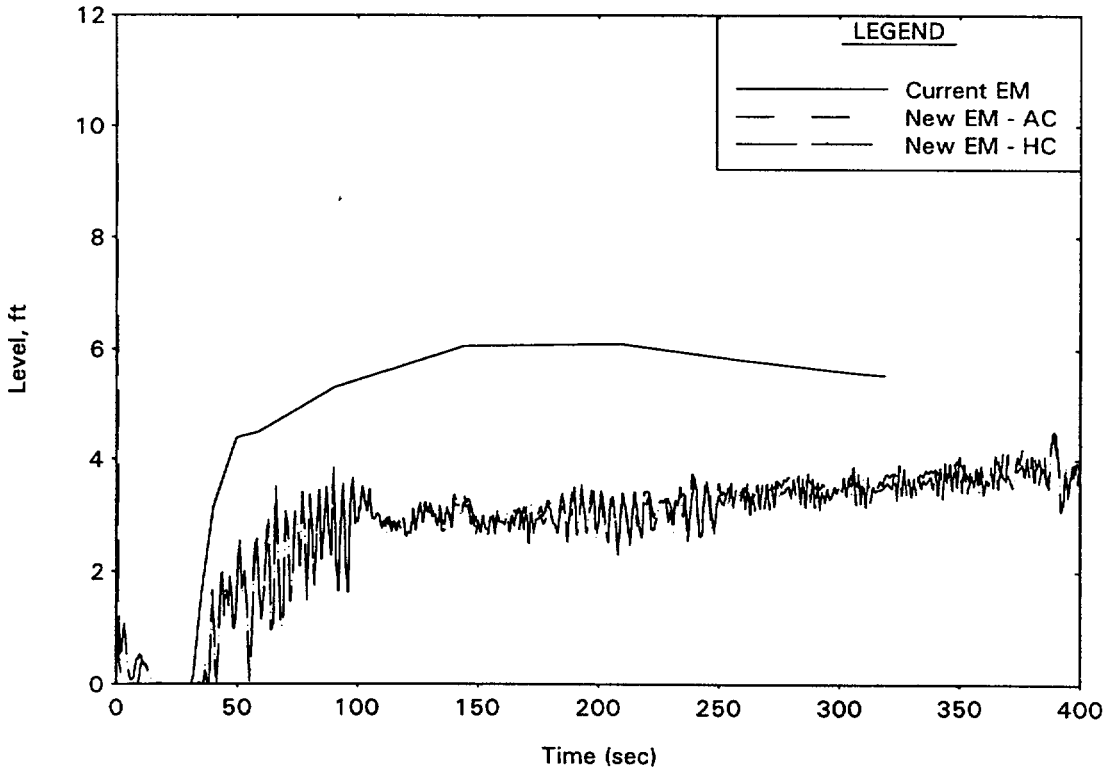

FIGURE E-19. Hot Channel Quench Front
10-ft Axial Peak.

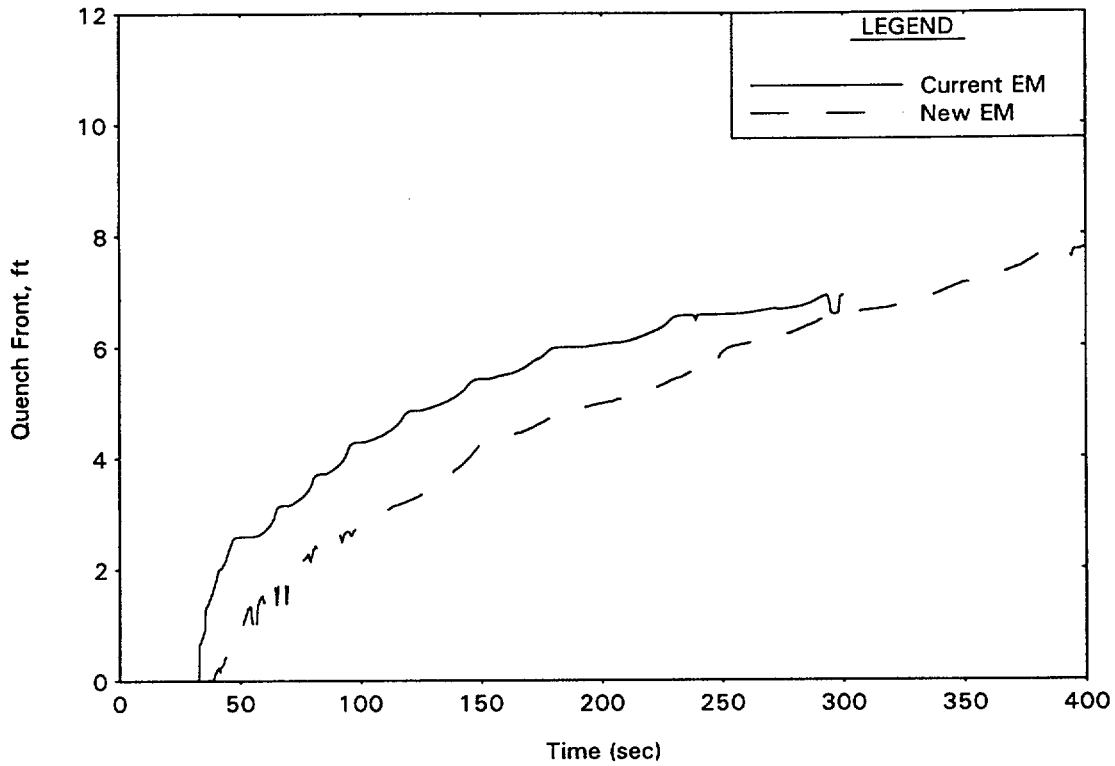

FIGURE E-20. RV Upper Plenum Pressure
10-ft Axial Peak.

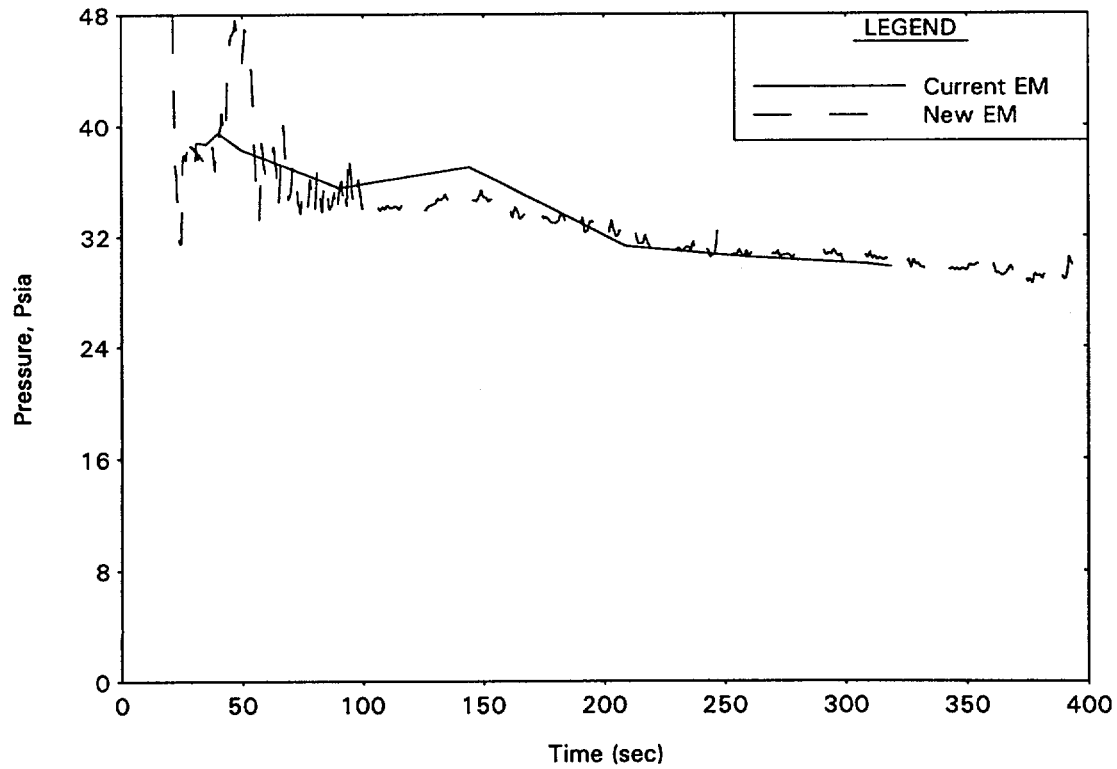

FIGURE E-21. Integrated Core Inlet Flow
10-ft Axial Peak.

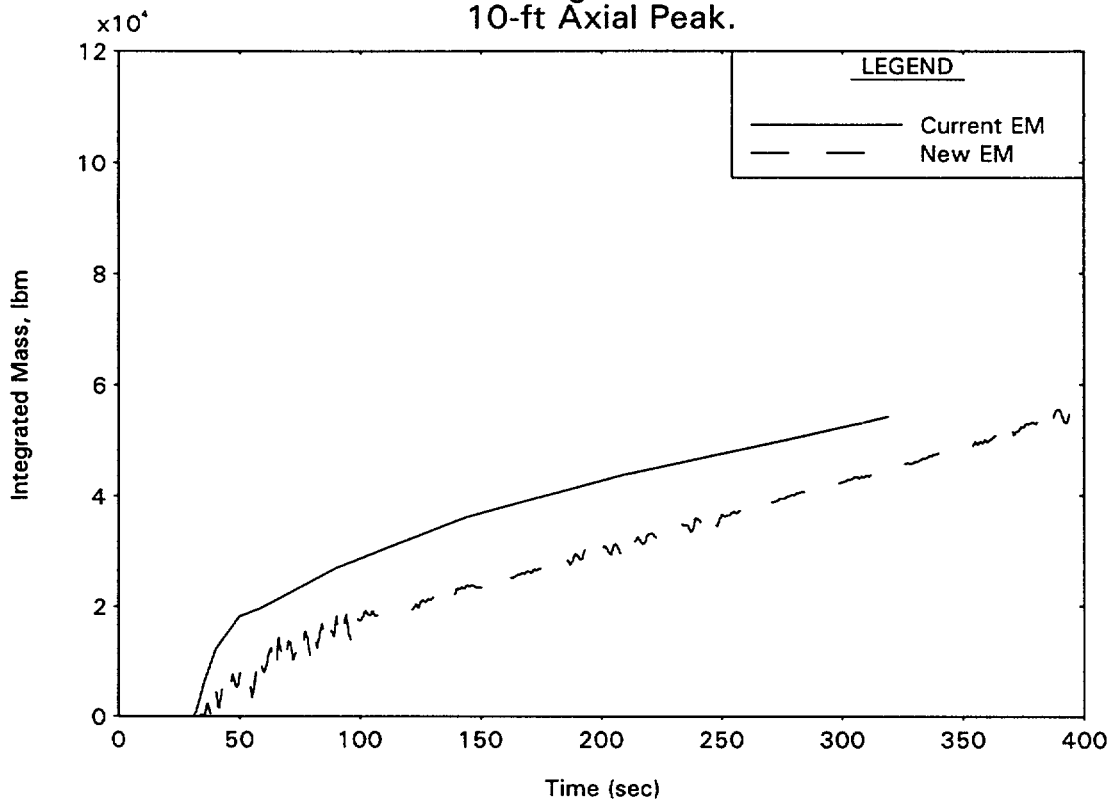

FIGURE E-22. Integrated Core Outlet Flow
10-ft Axial Peak.

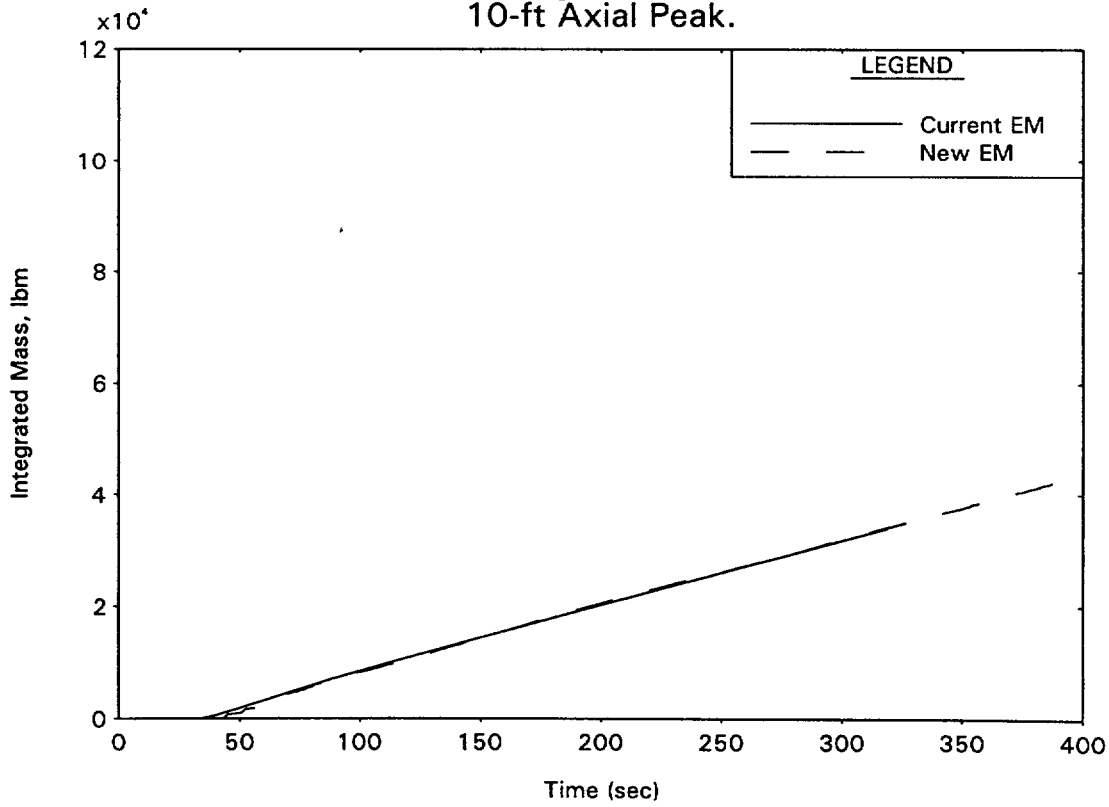

FIGURE E-23. Hot Channel Flow
10-ft Axial Peak.

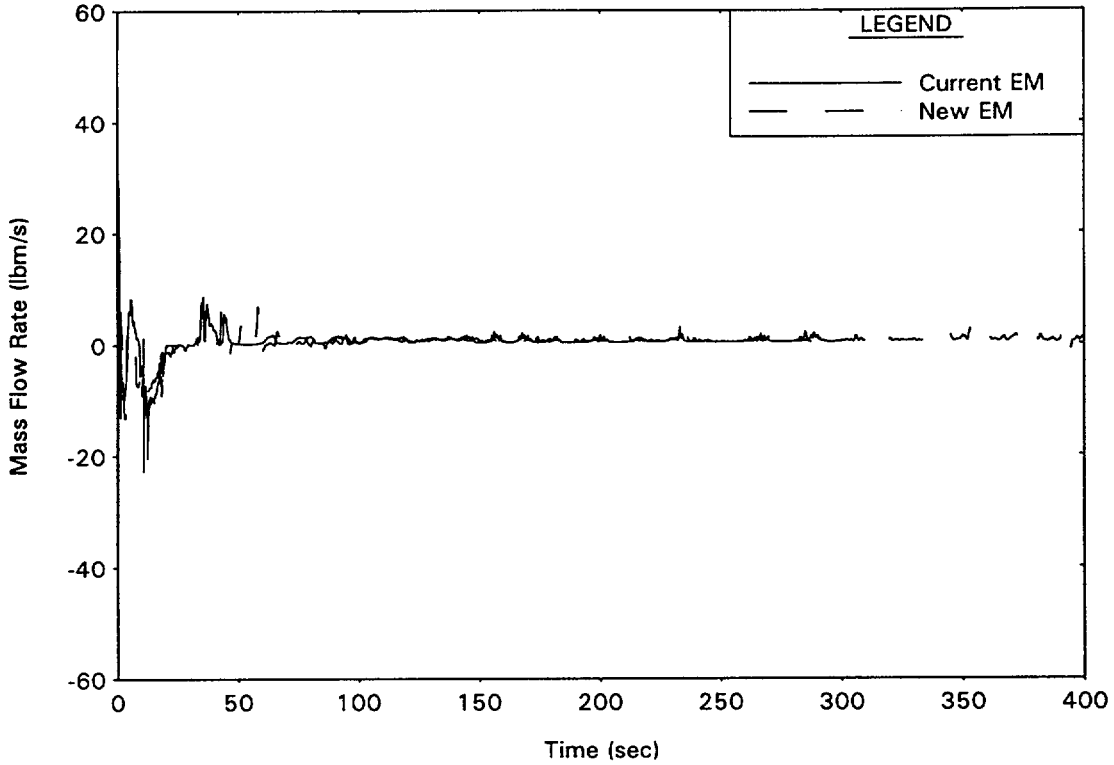

FIGURE E-24. Integrated CRF
10-ft Axial Peak.

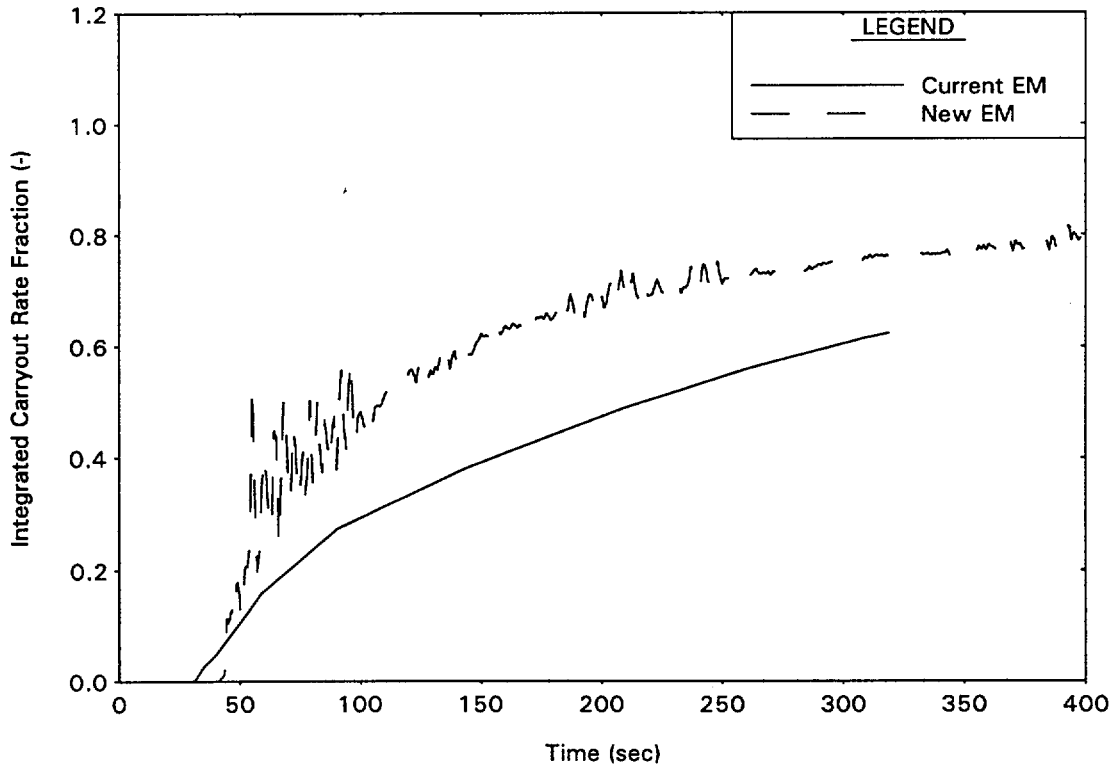

BAW-10168P

Revision 4
July 2000

- RSG LOCA -

BWNT Loss-of-Cooling Accident Evaluation Model for Recirculating Steam Generator Plants

Volume II – Small Break

Framatome Technologies
P. O. Box 10935
Lynchburg, Virginia 24506-0935

Framatome Technologies
Lynchburg, Virginia 24506-0935

Topical Report BAW-10168P
Revision 4

July 2000

- RSG LOCA -

BWNT Loss-of-Cooling Accident Evaluation Model for Recirculating Steam Generator Plants

Volume II – Small Break

Key Words: Large Break, LOCA, Transient, Water Reactors, Evaluation Model

ABSTRACT

This document presents the generic large and small break models used by B&W Nuclear Technologies for evaluating the performance of the emergency core cooling systems (ECCS) following a loss-of-coolant accident (LOCA) for Westinghouse and Combustion Engineering designed Pressurized Water Reactors (PWR). The large break model is discussed in Volume I and the small break model in Volume II. The Licensing Addendum provides a historical record of related correspondence including question responses, NRC Safety and Technical Evaluation Reports, and NRC approval letters. The models have been developed and compared with the required and acceptable features contained in Appendix K of the Code of Federal Regulations, 10CFR50. The evaluation models are shown to conform to Appendix K requirements.

ACKNOWLEDGEMENT

BWNT wishes to acknowledge the effort put forth by J. R. Biller, B. M. Dunn, R. J. Lowe, J. A. Klingenfus, M. L. Miller, K. C. Shieh, W. T. Sneed, C. K. Nithianandan, and C. R. Williamson in developing this report.

Topical Revision Record

Volume II – Small Break

Documentation Revision	Description
0	Original Issue
1	Revised to incorporate the changes discussed in the responses to questions.
2	Revision of SBLOCA model Volume II only. Incorporate the Wilson phase separation model, the BWUMV critical heat flux correlation, and a CCFL correlation. Perform all required calculations (swell level, hot channel temperature) in RELAP5; thus, deleting the use of the FRAP-T6 and FOAM2 computer codes. Document selected modelling studies (time step, leak discharge coefficient, etc.) Creation of Licensing Addendum to record and maintain copies of SERs, NRC questions, BWNT responses, etc. in an orderly manner for all revisions of BAW-10168. Removal of requirement that the EM can only be applied to BWNT supplied fuel. Various additional non-technical changes.
3	Letter Report Addendum Revising LBLOCA Model Volume I only. FRAP-T6-B&W removed from code package. The revised RELAP5 code, with improved EM pin model described in BAW-10164, Revision 3, will be used for blowdown calculations. BEACH, BAW-10166, Revision 4 with its improved quench front model (NEWQUEN), will be used for refill/reflood hot channel calculations.

Topical Revision Record (Cont'd)

Volume II – Small Break

Documentation Revision	Description
4	Revision of LBLOCA model Volume I only. Remove REFLOD3B code from LBLOCA code package. Refill/reflood calculations performed by RELAP5 run in a systems configuration, i.e. the entire RCS will be modeled. BEACH routines within RELAP5 will continue to be used, but they will now be dynamically coupled to the entire RCS. This revision is documented in Appendix E. No BEACH topical report revisions were made. Needed BEACH changes were incorporated into the RELAP5 revision given in BAW-10164, Revision 5.

1. INTRODUCTION

This report describes the features of the emergency core cooling system (ECCS) evaluation mode used by BWNT for application to Westinghouse (W) and Combustion Engineering (CE) designed PWR's. The evaluation model is applicable to the pressurized water reactors (PWR) categorized in Table 1-1. There are no significant system design differences for the nuclear steam system (NSS) and the ECCS within each category as these design features are the basis for the grouping.

For core designs employing the M5 alloy for fuel pin cladding, the material properties, inputs, methods, and correlations, described in BAW-10227 (References 6 and 7) shall supercede, as appropriate, those described within this volume.

Specific design information for each plant category is considered input to the evaluation model and is generated using the assumptions and techniques described herein.

The "Acceptance Criteria for Emergency Core Cooling Systems for Light Water Nuclear Power Reactors" (10CFR50.46) was issued by the NRC in January 1974. Appendix K of 10CFR50.46 defines the required and acceptable features of models to be used to evaluate the performance of the ECC systems. The information presented in this document defines the BWNT evaluation model and shows that the model conforms to Appendix K requirements.

The topical report is divided into two volumes. The first volume presents the large-break evaluation model. The second volume presents the small-break evaluation model. Each of the volumes contain the following seven sections which define the respective evaluation models:

1. Definition of model versus input (Section 3).

2. Features of the evaluation model and statements of conformity to Appendix K (Section 4).

3. The calculational technique used to evaluate the maximum local cladding oxidation (Section 5).

4. The calculational technique used to evaluate the maximum hydrogen generation (Section 6).

5. The technique used to evaluate conformance to the coolable geometry criterion (Section 7).

6. The technique for establishing conformance to the long-term cooling criterion (Section 8).

7. Required documentation necessary to meet 10CFR50.46 (Section 9).

Addition definition and background information for the evaluation models is provided in the addendum, which contains licensing data – responses to NRC questions, position papers, SERs, etc. – on previous and current revisions to the evaluation model.

10. REFERENCES

1. J. A. Klingenfus, et al., "RELAP5/MOD2-B&W – An Advanced Computer Program for Light Water Reactor LOCA and Non-LOCA Transient Analysis," BAW-10164 Rev. 2, August 1992, B&W Nuclear Technologies, Lynchburg, Virginia.

2. Y. H. Hsii, et al., "TACO2 Fuel Pin Performance Analysis," BAW-10141A, Babcock & Wilcox, Lynchburg, Virginia.

3. D. A. Wesley and K. J. Firth, "TACO3 – Fuel Pin Thermal Analysis Code," BAW-10162, Babcock & Wilcox, Lynchburg, Virginia.

4. B. M. Dunn, et al., "B&W's Evaluation Model Report with Specific Application to 177 FA Plants with Lowered Loop Arrangement," BAW-10091, Babcock & Wilcox, Lynchburg, Virginia.

5. P. R. McHugh and R. D. Hentzen, "Natural Circulation Cooling in U.S. Pressurized Water Reactors," NUREG/CR-5769, EGG-2653, January 1992, U.S. Nuclear Regulatory Commission, Washington D.C.

6. D. B. Mitchell and B. M. Dunn, "Evaluation of Advanced Cladding and Structural Material (M5) in PWR Reactor Fuel," BAW-10227P, September 1997, Framatome Cogema Fuels, Lynchburg, Virginia.

7. S. A. Richards, NRC, to T. A. Coleman, FCF, Revised Safety Evaluation (SE) for Topical Report BAW-10227P: "Evaluation of Advanced Cladding and Structural Material (M5) in PWR Reactor Fuel" (TAC No. M99903), February 4, 2000.

BAW-10168P

Revision 4
July 2000

- RSG LOCA -

BWNT Loss-of-Cooling Accident Evaluation Model for Recirculating Steam Generator Plants

Licensing Addendum

Framatome Technologies
P. O. Box 10935
Lynchburg, Virginia 24506-0935

Framatome Technologies
Lynchburg, Virginia 24506-0935

Topical Report BAW-10168P
Revision 4

July 2000

- RSG LOCA -

BWNT Loss-of-Cooling Accident Evaluation Model for Recirculating Steam Generator Plants

Licensing Addendum

Key Words: Large Break, LOCA, Transient, Water Reactors, Evaluation Model

ABSTRACT

This document presents the generic large and small break models used by B&W Nuclear Technologies for evaluating the performance of the emergency core cooling systems (ECCS) following a loss-of-coolant accident (LOCA) for Westinghouse and Combustion Engineering designed Pressurized Water Reactors (PWR). The large break model is discussed in Volume I and the small break model in Volume II. The Licensing Addendum provides a historical record of related correspondence including question responses, NRC Safety and Technical Evaluation Reports, and NRC approval letters. The models have been developed and compared with the required and acceptable features contained in Appendix K of the Code of Federal Regulations, 10CFR50. The evaluation models are shown to conform to Appendix K requirements.