NOTES
1. FOR NOTES AND REFERENCES SEE DWG. FM-20A.

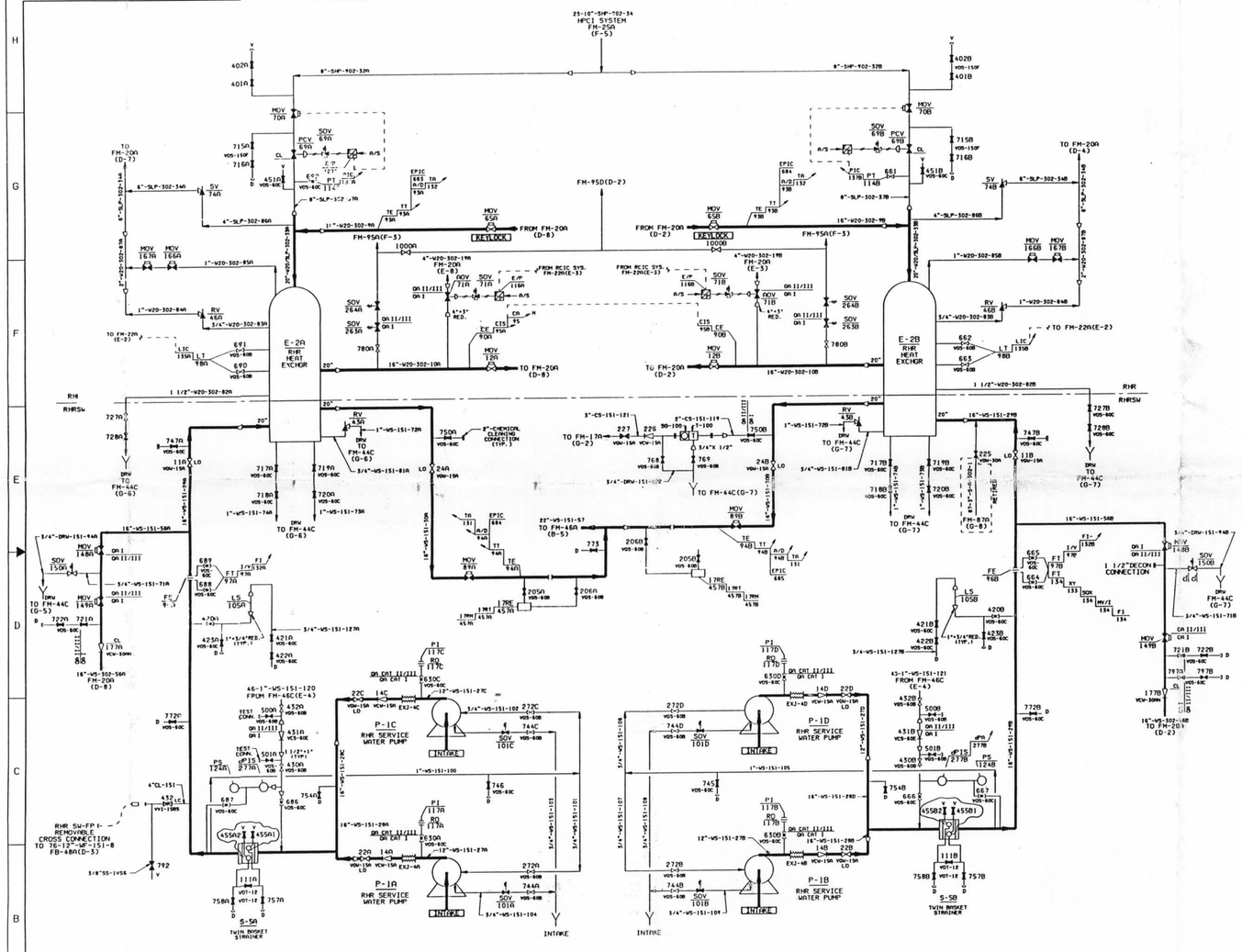

FOR INFORMATION ONLY

UNCONTROLLED DRAWING
Copy Date JUN 28 2000
CAUTION — Extended use of this drawing copy may result in its inaccuracy due to subsequent design changes and drawing updates

THE ORIGINAL TRACING FOR THIS DRAWING WAS PREPARED BY: STONE & WEBSTER CORP.

A RECORD OF THE ORIGINAL DOCUMENT WITH APPROVAL INITIALS/SIGNATURES WITH ALL CHANGES AND SUBSEQUENT REVISIONS THEREOF IS MAINTAINED IN THE FILES OF THE NEW YORK POWER AUTHORITY.

THIS DOCUMENT WAS ELECTRONICALLY STORED AT REVISION 29

QA CAT. I.II/III

NUCLEAR SAFETY RELATED

DWN	JAMES A. FITZPATRICK NUCLEAR POWER PLANT
CHK'D	
RESP. ENG.	
VERIFIED	FLOW DIAGRAM RESIDUAL HEAT REMOVAL SYSTEM 10
APPROVAL	
DATE	

NewYorkPower Authority

SCALE NONE
DWG NO FM-20B
REV 55
SHEET OF
REF: ISI-FM-20B

REVISIONS

REV	DATE	DESCRIPTION	DWN	CHK	RE	VF	APP
55	8/7/00	AS BUILT PER DCR-00-012	MJG	RVB			SKK
54	4/12/99	AS BUILT PER DCR-99-055 & DCR-98-506	PJD	RVB	--	RGF	SKK
53	1/5/98	AS BUILT PER MOD. NO. DI-98-024	KMB	RVB	--	KJ	SKK
52	5/15/97	AS BUILT PER DCR-98-060	KMB	RVB	--	KF	SKK

FOR INFORMATION ONLY

D-6