Tennessee Valley Authority, Post Office Box 2000, Decatur, Alabama 35609-2000

July 31, 2000

U.S. Nuclear Regulatory Commission
ATTN: Document Control Desk
Washington, D.C. 20555

Gentlemen:

In the Matter of	)	Docket Nos. 50-260
Tennessee Valley Authority	)	50-296

BROWNS FERRY NUCLEAR PLANT (BFN) - UNITS 2 AND 3 - AMERICAN SOCIETY OF MECHANICAL ENGINEERS (ASME) SECTION XI, INSERVICE INSPECTION AND REPAIR AND REPLACEMENTS PROGRAMS - SUMMARY REPORTS FOR Unit 3 CYCLE 9 OPERATION AND CORRECTED INSERVICE INSPECTION SUMMARY REPORT FOR UNIT 2 CYCLE 10 OPERATION

In accordance with paragraphs IWA-6220 and IWA-6230 of the American Society of Mechanical Engineers Boiler and Pressure Vessel Code, Section XI, TVA is submitting the BFN Unit 3 outage summary reports for NRC review. The summary reports are for inservice inspection (NIS-1 Report), and repair and replacement activities (NIS-2 Report) in accordance with ASME Section XI Code, 1989 Edition, no addenda for Unit 3 Cycle 9 operation.

Enclosure 1 contains the BFN Unit 3 Inservice Inspection Summary Report which includes the NIS-1 report for Code Class 1 and 2 pressure retaining components and their supports, containment inspections, reactor vessel internals inspection, and augmented inspections. Enclosure 2 contains the Repair and Replacements Summary Report (NIS-2) for Code Class 1 and 2 components and supports.

Printed on recycled paper

A047

TVA is also submitting corrected NIS-1 Summary Report data (Enclosure 1, Attachment 3) for ASME Section XI Code, Category D-B, examined during Unit 2 Cycle 10 operation. The Unit 2 Cycle 10 NIS-1 Summary Report was submitted to NRC by TVA letter dated August 6, 1999. TVA is revising the percentage completed for Code Category D-B from 100 to 94 percent. There are four remaining Integral Attachment-Component Supports/Restraints (Code Item D2.20) to be examined. These supports will be examined during the Unit 2 Cycle 11 refueling outage which will close the second inspection interval.

There are no commitments contained in this letter. If you have any questions regarding these reports, please contact me at (256) 729-2636.

Sincerely,

T. E. Abney
Manager of Licensing
and Industry Affairs

Enclosures
cc: (Enclosures):

Mr. Paul E. Fredrickson, Branch Chief
U.S. Nuclear Regulatory Commission
Region II
61 Forsyth Street, S.W.
Suite 23T85
Atlanta, Georgia 30303

NRC Resident Inspector
Browns Ferry Nuclear Plant
10833 Shaw Road
Athens, Alabama 35611

Mr. William O. Long, Senior Project Manager
U.S. Nuclear Regulatory Commission
One White Flint, North
11555 Rockville Pike
Rockville, Maryland 20852

ENCLOSURE 1

TENNESSEE VALLEY AUTHORITY
BROWNS FERRY NUCLEAR PLANT (BFN)
UNITS 2 AND 3
AMERICAN SOCIETY OF MECHANICAL ENGINEERS (ASME),
SECTION XI, INSERVICE INSPECTION (ISI), AND
AUGMENTED EXAMINATIONS PROGRAM

SUMMARY REPORT (NIS-1) FOR UNIT 3 CYCLE 9 OPERATION
AND CORRECTED SUMMARY REPORT (NIS-1) FOR
FOR UNIT 2 CYCLE 10 OPERATION

(SEE ATTACHED)

BROWNS FERRY

NUCLEAR PLANT

UNIT 3 CYCLE 9

ASME SECTION XI

NIS-1 DATA REPORT

OWNER: TENNESSEE VALLEY AUTHORITY OFFICE OF NUCLEAR POWER 1101 MARKET STREET CHATTANOOGA, TENNESSEE 37402	PLANT: BROWNS FERRY NUCLEAR PLANT PO BOX 2000 DECATUR, ALABAMA 35609-2000
UNIT: THREE	CERTIFICATE OF AUTHORIZATION: NOT REQUIRED.
COMMERCIAL SERVICE DATE: MARCH 1, 1977	
NATIONAL BOARD NUMBER FOR UNIT: NOT REQUIRED.	

INSERVICE INSPECTION SUMMARY REPORT UNIT 3 CYCLE 9

OWNER: TENNESSEE VALLEY AUTHORITY OFFICE OF NUCLEAR POWER 1101 MARKET STREET CHATTANOOGA, TENNESSEE 37402	PLANT: BROWNS FERRY NUCLEAR PLANT PO BOX 2000 DECATUR, ALABAMA 35609-2000

UNIT: THREE CERTIFICATE OF AUTHORIZATION: NOT REQUIRED.

COMMERCIAL SERVICE DATE: MARCH 1, 1977

NATIONAL BOARD NUMBER FOR UNIT: NOT REQUIRED.

TABLE OF CONTENTS

APPENDIX I	COVER SHEET
APPENDIX II	FORM NIS-1
APPENDIX III	SCOPE INTRODUCTION
APPENDIX IV	EXAMINATION SUMMARY ASME CODE CASES UNIT 3 INTERVAL STATUS PERSONNEL AND EQUIPMENT CERTIFICATIONS
APPENDIX V	METHOD FOR CALCULATING EXAM COVERAGE EXAMINATION LIMITATIONS
APPENDIX VI	EXAMINATION PLAN (SECTION XI) EXAMINATION PLAN FOR CLASS 1 AND 2 COMPONENTS COMPONENT ISOMETRIC DRAWINGS
APPENDIX VII	SUMMARY OF INDICATIONS ADDITIONAL SAMPLES
ATTACHMENT 1	EXAMINATION PLAN (AUGMENTED) AND SUMMARY
ATTACHMENT 2	APPENDIX IWE - BFN CONTAINMENT INSERVICE INSPECTION PROGRAM
ATTACHMENT 3	SUPPLEMENTAL SUBMITTAL - (Corrected Information BFN Unit 2, ISI Second Inspection Interval)
ATTACHMENT 4	BFN UNIT 3 CYCLE 9 SCAN PLAN (ALL EXAMS)

OWNER: TENNESSEE VALLEY AUTHORITY OFFICE OF NUCLEAR POWER 1101 MARKET STREET CHATTANOOGA, TENNESSEE 37402	PLANT: BROWNS FERRY NUCLEAR PLANT PO BOX 2000 DECATUR, ALABAMA 35609-2000
UNIT: THREE	CERTIFICATE OF AUTHORIZATION: NOT REQUIRED.
COMMERCIAL SERVICE DATE: MARCH 1, 1977	
NATIONAL BOARD NUMBER FOR UNIT: NOT REQUIRED.	

APPENDIX I

COVER SHEET

OWNER: TENNESSEE VALLEY AUTHORITY OFFICE OF NUCLEAR POWER 1101 MARKET STREET CHATTANOOGA, TENNESSEE 37402	PLANT: BROWNS FERRY NUCLEAR PLANT PO BOX 2000 DECATUR, ALABAMA 35609-2000
UNIT: THREE	CERTIFICATE OF AUTHORIZATION: NOT REQUIRED.
COMMERCIAL SERVICE DATE: MARCH 1, 1977	
NATIONAL BOARD NUMBER FOR UNIT: NOT REQUIRED.	

COVER SHEET

DATE OF DOCUMENT COMPLETION

May 3, 2000

NAME OF OWNER AND ADDRESS OF PRINCIPAL OFFICES

Tennessee Valley Authority
Office of Nuclear Power
1101 Market Street
Chattanooga, TN 37402-2801

NAME AND ADDRESS OF THE NUCLEAR GENERATING PLANT

Browns Ferry Nuclear Plant
PO Box 2000
Decatur, AL 35602

NAME OR NUMBER ASSIGNED TO THE NUCLEAR POWER UNIT BY TVA

Browns Ferry Nuclear Plant, Unit 3

COMMERCIAL OPERATION DATE OF UNIT

March 1, 1977

OWNER: TENNESSEE VALLEY AUTHORITY OFFICE OF NUCLEAR POWER 1101 MARKET STREET CHATTANOOGA, TENNESSEE 37402	PLANT: BROWNS FERRY NUCLEAR PLANT PO BOX 2000 DECATUR, ALABAMA 35609-2000
UNIT: THREE	CERTIFICATE OF AUTHORIZATION: NOT REQUIRED.
COMMERCIAL SERVICE DATE: MARCH 1, 1977	
NATIONAL BOARD NUMBER FOR UNIT: NOT REQUIRED.	

APPENDIX II

FORM NIS-1

FORM NIS-1 OWNERS' REPORT FOR INSERVICE INSPECTIONS
As required by the Provisions of the ASME Code Rules

1. Owner Tennessee Valley Authority, 1101 Market St. Chattanooga, TN. 37402
(Name and Address of Owner)

2. Plant Browns Ferry Nuclear Plant, PO Box 2000 Decatur, AL. 35609-2000
(Name and Address of Plant)

3. Plant Unit 3 4. Owner Certificate of Authorization Not Required

5. Commercial Service Date 03/01/77 6. National Board Number for Unit Not Required

7. Components Inspected:

Component or Appurtenance	Manufacturer or Installer	Manufacturer or Installer Serial No.	State or Province No.	National Board No.
Reactor Pressure Vessel	General Electric	Contract No. 66C31-90744	N/A	N/A
Various systems and components. (See Appendix VI)	TVA	N/A	N/A	N/A
The NIS-1 Owners Report for Inservice Inspections includes Appendices I, II, III, IV, V, VI, VII and attachment 2				

Total Pages 1 of 2

Note: Supplemental sheets in form of lists, sketches, or drawings may be used provided (1) size is 8.5 in. X 11 in., (2) information in items 1 through 6 on this data report is included on each sheet, and (3) each sheet is numbered and the number of sheets is recorded at the top of this form.

FORM NIS-1 (back)

8. Examination Dates 11/13/98 to 05/03/00

9. Inspection Interval from 11/19/96 to 11/18/05

10. Applicable Editions of Section XI 1989 Addenda N/A

11. Abstract of Examinations. Include a list of examinations and a statement concerning status of work required for current interval. See Appendix II, III, IV, V, VI, VII & Attachment 2. Examinations complete the first outage of the second period of the second inspection interval.

12. Abstract of Conditions Noted See Appendix II, III, IV, V, VI, VII, & Attachment 2.

13. Abstract of Corrective Measures Recommended and Taken. See Appendix VII

We certify that the statements made in this report are correct and the examinations and corrective measures taken conform to the rules of the ASME Code, Section XI.

Date 7-20, 2000 Signed Tennessee Valley Authority By
Owner

Certificate of Authorization No. Not Applicable Expiration Date Not Applicable

CERTIFICATE OF INSERVICE INSPECTION

I, The undersigned, holding a valid commission issued by the National Board of Boiler and Pressure Vessel Inspectors and/or the State or Province of Tennessee and employed by HSBI & I of Hartford, CT., have inspected the components described in this Owners' Data Report during the period 11/13/98 to 5/03/00, and state that to the best of my knowledge and belief, the Owner has performed examinations and taken corrective measures described in this Owners' Data Report in accordance with the requirements of the ASME Code Section XI.

By signing this certificate neither the Inspector nor his employer makes any warranty, expressed or implied, concerning the examinations and corrective measures described in this Owners' Data Report. Furthermore, neither the Inspector nor his employer shall be liable in any manner for any personal injury or property damage or a loss of any kind arising from or connected with this inspection.

Albert Tadel Commissions TN 3135 I B S NA
Inspectors Signature National Board, State, Province and No.

Date July 20 19 2000
7/20/00

OWNER: TENNESSEE VALLEY AUTHORITY OFFICE OF NUCLEAR POWER 1101 MARKET STREET CHATTANOOGA, TENNESSEE 37402	PLANT: BROWNS FERRY NUCLEAR PLANT PO BOX 2000 DECATUR, ALABAMA 35609-2000
UNIT: THREE	CERTIFICATE OF AUTHORIZATION: NOT REQUIRED.
COMMERCIAL SERVICE DATE: MARCH 1, 1977	
NATIONAL BOARD NUMBER FOR UNIT: NOT REQUIRED.	

APPENDIX III

SCOPE
INTRODUCTION

OWNER: TENNESSEE VALLEY AUTHORITY OFFICE OF NUCLEAR POWER 1101 MARKET STREET CHATTANOOGA, TENNESSEE 37402	PLANT: BROWNS FERRY NUCLEAR PLANT PO BOX 2000 DECATUR, ALABAMA 35609-2000
UNIT: THREE	CERTIFICATE OF AUTHORIZATION: NOT REQUIRED.
COMMERCIAL SERVICE DATE: MARCH 1, 1977	
NATIONAL BOARD NUMBER FOR UNIT: NOT REQUIRED.	

SCOPE

This appendix provides an overview of the Inservice inspections (ISI) performed during the unit 3 cycle 9 scheduled refueling outage on Class 1 and 2 components for ASME Section XI Code credit and other augmented examinations.

INTRODUCTION

The examinations were performed in accordance with implementing plant surveillance instruction 3-SI-4.6.G "Inservice Inspection and Risk Informed Inservice Inspection Program Unit 3". 3-SI-4.6.G is organized to comply with the ISI NDE requirements of the 1989 Edition of the American Society of Mechanical Engineers (ASME) Boiler and Pressure Vessel Code, Section XI, Division 1, Articles IWX-1000, IWX-2000, IWX-3000, and IWX-6000 in accordance with Title 10 Code of Federal Regulations (CFR) Part 50, 50.55a(g); to implement the Browns Ferry Nuclear Plant (BFN) Technical Requirements TR-3.4.3; and to fulfill the requirements of SPP-9.1, and ASME Section XI Inservice Inspection Program.

Beginning this refueling outage (second Period of the second Interval), surveillance instruction 3-SI-4.6.G initiated the NRC approved, BFN Risk-Informed Inservice Inspection Program to address all piping locations that are subject to service induced degradation. In accordance with Regulatory Guides 1.174 and 1.178 and Code Case N-577, this program provides an acceptable alternative approach to the existing Section XI requirements for scope and frequency of examinations for piping, and satisfies the criteria of 10CFR50.55a(a)(3)(i) providing an acceptable level of quality and safety.

3-SI-4.6.G reflects the built-in limitations of the original plant design, geometry, construction, component materials and the current technology or state-of-the-art nondestructive examination techniques. The Surveillance Instruction specifies the nondestructive methods to be used and provides schedule tables from which specific items were selected for examination during this outage. The nondestructive examinations were witnessed or otherwise verified by an Authorized Nuclear Inservice Inspector (ANII).

The examinations were performed by the TVA Inspection Services Organization (ISO) under the direction of Browns Ferry Component Engineering. Augmentation of personnel was provided by ABB Combustion Engineering Nuclear Power NDE Services and General Electric Services.
An overview of ISI activities consists of the following:

- ASME Section XI Class 1 and 2 Piping Examinations
- ASME Section XI Class 1 and 2 Support Examinations
- ASME Section XI Reactor Pressure In-Vessel Visual Examinations (IVVI)
- Augmented Inspection Activities

OWNER: TENNESSEE VALLEY AUTHORITY OFFICE OF NUCLEAR POWER 1101 MARKET STREET CHATTANOOGA, TENNESSEE 37402	PLANT: BROWNS FERRY NUCLEAR PLANT PO BOX 2000 DECATUR, ALABAMA 35609-2000
UNIT: THREE	CERTIFICATE OF AUTHORIZATION: NOT REQUIRED.
COMMERCIAL SERVICE DATE: MARCH 1, 1977	
NATIONAL BOARD NUMBER FOR UNIT: NOT REQUIRED.	

APPENDIX IV

EXAMINATION SUMMARY
ASME CODE CASES
UNIT 3 INTERVAL STATUS
PERSONNEL AND EQUIPMENT CERTIFICATIONS

OWNER: TENNESSEE VALLEY AUTHORITY OFFICE OF NUCLEAR POWER 1101 MARKET STREET CHATTANOOGA, TENNESSEE 37402	PLANT: BROWNS FERRY NUCLEAR PLANT PO BOX 2000 DECATUR, ALABAMA 35609-2000
UNIT: THREE	CERTIFICATE OF AUTHORIZATION: NOT REQUIRED.
COMMERCIAL SERVICE DATE: MARCH 1, 1977	
NATIONAL BOARD NUMBER FOR UNIT: NOT REQUIRED.	

EXAMINATION SUMMARY:

The cycle 9 ISI was the first scheduled refueling outage of the second inspection period of the second interval. There were 35 visuals (VT-1, VT-2, & VT-3), and 26 ultrasonic examinations performed in support of ASME Section XI Code credit, including baseline (PSI), (see Appendix VI, Examination Plan). Two Notification of Indications (NOI's) were issued to document unacceptable conditions identified during the performance of the examinations. The NOI's were evaluated and dispositioned by engineering (see Appendix VII, Summary of Indications).

Additional examinations were performed in accordance with BFN's augmented inspection program and are included for information in Attachment 1. These include visual examinations of selected snubbers and ultrasonic examination of piping welds on the CRD mixing tee which were performed in accordance with the augmented program (see Attachment 1).

Other examinations included the visual examination of the Reactor Pressure Vessel Internals Inspection (RPVII) and the In-Vessel Visual Inspection (IVVI).

OWNER: TENNESSEE VALLEY AUTHORITY OFFICE OF NUCLEAR POWER 1101 MARKET STREET CHATTANOOGA, TENNESSEE 37402	PLANT: BROWNS FERRY NUCLEAR PLANT PO BOX 2000 DECATUR, ALABAMA 35609-2000
UNIT: THREE	CERTIFICATE OF AUTHORIZATION: NOT REQUIRED.
COMMERCIAL SERVICE DATE: MARCH 1, 1977	
NATIONAL BOARD NUMBER FOR UNIT: NOT REQUIRED.	

ASME CODE CASES

The following code cases were utilized during the unit 3 cycle 9 outage:

N-307-1 Revised Ultrasonic Examination Volume for Class 1 Bolting, Table IWB-2500-1, Examination Category B-G-1, When the Examinations Are Conducted From the Center-Drilled Hole, Section XI, Division 1.

N-435-1 Alternative Examinations Requirements for Vessels With Wall Thickness 2 in. or Less, Section XI, Division 1.

N-445 Use of Later Editions of SNT-TC-1A for Qualification of Nondestructive Examination Personnel, Section XI, Division 1.

N-457 Qualification Specimen Notch Location for Ultrasonic Examination of Bolts and Studs, Section XI, Division 1.

N-460 Alternative Examination Coverage for Class 1 and Class 2 Welds, Section XI, Division 1.

N-461 Alternative Rules for Piping Calibration Block Thickness, Section XI, Division 1.

N-491 Alternative Rules for Examination of Class 1, 2, 3, and MC Component Supports of Light Water Cooled Power Plants, Section XI, Division 1.

N-524 Alternate Examination Requirements for Longitudinal Welds in Class 1 and 2 Piping - Section XI, Division 1.

N-577 Risk-Informed Requirements for Class 1, 2, and 3 Piping, Method A, Section XI, Division 1, with the more detailed provisions provided in WCAP-14572, Revision 1-NP-A

OWNER: TENNESSEE VALLEY AUTHORITY OFFICE OF NUCLEAR POWER 1101 MARKET STREET CHATTANOOGA, TENNESSEE 37402	PLANT: BROWNS FERRY NUCLEAR PLANT PO BOX 2000 DECATUR, ALABAMA 35609-2000
UNIT: THREE	CERTIFICATE OF AUTHORIZATION: NOT REQUIRED.
COMMERCIAL SERVICE DATE: MARCH 1, 1977	
NATIONAL BOARD NUMBER FOR UNIT: NOT REQUIRED.	

UNIT 3 INTERVAL STATUS

The BFN unit 3 cycle 9 ISI examinations were performed during the first scheduled refueling outage of the second period of the second interval. The component quantities examined were selected from 3-SI-4.6.G, Section 8.1 (Unit 2 Class 1 and 2 components) and from applicable BFN unit 3 relief requests.

Table 1 summarizes code credit examinations by category and percentage completed and demonstrates compliance with ASME Section XI percentage requirements.

TABLE 1

ASME SECTION XI EXAMINATION SUMMARY FOR THE SECOND PERIOD OF THE SECOND TEN-YEAR INSPECTION INTERVAL

CATEGORY	% COMPLETE	COMMENTS
B-A	33%	
B-B	N/A	
B-D	32%	
B-E		Deferred to system hydro
B-F	29%	
B-G-1	33%	
B-G-2	28%	
B-H	0%	
B-J	32%	
B-K-1	26%	
B-L-1	N/A	
B-L-2	100%	
B-M-1	N/A	
B-M-2		when disassembled
B-N-1	66%	each Period
B-N-2		Deferral permissible
B-O		Deferral permissible
B-P		Refer to pressure test program
B-Q	N/A	
C-A	25%	
C-B	33%	
C-C	27%	
C-D	N/A	
C-F-1	31%	
C-F-2	34%	
C-G	N/A	
C-H		Refer to pressure test program
D-B	29%	
F-A	34%	
R-A	19%*	

*Risked Informed was initiated this cycle (1st cycle, 2nd period, 2nd interval). Piping weld population was reduced.

OWNER: TENNESSEE VALLEY AUTHORITY OFFICE OF NUCLEAR POWER 1101 MARKET STREET CHATTANOOGA, TENNESSEE 37402	PLANT: BROWNS FERRY NUCLEAR PLANT PO BOX 2000 DECATUR, ALABAMA 35609-2000
UNIT: THREE	CERTIFICATE OF AUTHORIZATION: NOT REQUIRED.
COMMERCIAL SERVICE DATE: MARCH 1, 1977	
NATIONAL BOARD NUMBER FOR UNIT: NOT REQUIRED.	

PERSONNEL/EQUIPMENT CERTIFICATIONS

NDE personnel certification records for TVA and contractor employees are maintained by TVA Nuclear Engineering Corporate, Inspection Services Organization (ISO). These records are maintained as permanent QA records for the forty year plant life. Any details or specifics regarding NDE certification records should be directed to ISO at the Sequoyah Training Center in Soddy-Daisy, Tennessee at telephone number (423) 843-4026.

NDE equipment certification records are maintained by the TVA ISO staff. Details or specifics regarding NDE equipment certification records should be directed to ISO at the Sequoyah Training Center in Soddy Daisy, Tennessee at telephone number (423)843-4026.

OWNER: TENNESSEE VALLEY AUTHORITY OFFICE OF NUCLEAR POWER 1101 MARKET STREET CHATTANOOGA, TENNESSEE 37402	PLANT: BROWNS FERRY NUCLEAR PLANT PO BOX 2000 DECATUR, ALABAMA 35609-2000
UNIT: THREE	CERTIFICATE OF AUTHORIZATION: NOT REQUIRED.
COMMERCIAL SERVICE DATE: MARCH 1, 1977	
NATIONAL BOARD NUMBER FOR UNIT: NOT REQUIRED.	

APPENDIX V

METHOD FOR CALCULATION EXAM COVERAGE EXAMINATIONS

OWNER: TENNESSEE VALLEY AUTHORITY OFFICE OF NUCLEAR POWER 1101 MARKET STREET CHATTANOOGA, TENNESSEE 37402	PLANT: BROWNS FERRY NUCLEAR PLANT PO BOX 2000 DECATUR, ALABAMA 35609-2000
UNIT: THREE	CERTIFICATE OF AUTHORIZATION: NOT REQUIRED.
COMMERCIAL SERVICE DATE: MARCH 1, 1977	
NATIONAL BOARD NUMBER FOR UNIT: NOT REQUIRED.	

METHOD FOR CALCULATION OF LIMITATIONS

The ASME Section XI Code 1989 Edition, no Addenda, requires that "essentially 100%" of the examination area/volume be completed. Code Case N-460 establishes "essentially 100%" to be > 90% coverage; and further states "The applicable examination records shall identify both the cause and percentage of reduced examination coverage". To insure compliance with these requirements during the performance of the ISI examinations, the following guidelines are utilized.

The Code required surface examination areas or volumetric examination volumes for each type of weld (piping or vessel weld) are illustrated in the figures of IWB-2500 or IWC-2500.

Surface examination, as illustrated in the figures, are required on essentially 100% of the weld length surface plus a specified amount of base material adjacent to the weld. Surface areas are calculated in those instances where there may be interference and/or limitations causing a reduction in the examination coverage. The Code required surface examination area coverage is generally the weld surface plus ½-inch base material adjacent to the weld surface.

Volumetric examinations, as illustrated in the figures, are required for essentially 100% of the specified piping weld volume. The "weld-width" volume includes the weld plus ¼-inch on each side of the weld, and the "weld-thickness" volume generally includes the lower one-third of the weld/piping thickness for the full length of the weld. As illustrated for vessel welds, the "weld-width" volume generally includes the weld plus ½-t (ts/2) on each side of the weld while "weld-thickness" volume generally includes the entire component thickness (i.e. full volume). The volume changes with variations in weld configuration (e.g. transition between different pipe thickness or nozzle-to-vessel configuration). Therefore, it is necessary to determine the required volume for each weld to determine the correct scan paths and angles for manual ultrasonic examinations.

The 1989 Edition, Section XI, paragraph IWA-2232 requires that the ultrasonic examination of piping systems be conducted in accordance with Appendix I, Section XI. Appendix I requires that the ultrasonic examination of piping systems be conducted in accordance with Appendix III, Section XI and the vessel welds greater than 2-inch thick be conducted in accordance with Article 4 of ASME Section V, 1989 Edition, as supplemented by Appendix I, Section XI. Appendix III and Article 4 define, in part, the applicable examination methods (e.g. examination angles, scan directions) to be used during examination. Paragraphs IWA-2221 and IWA-2222 of Section XI require that surface examinations be conducted in accordance with Article 6 or 7, as applicable, of ASME Section V, 1989 Edition.

TVA developed procedure N-GP-28 to provide a standardized methodology for calculating percentage of code coverage in those instances where configuration or interference from other components restricts the access for examination and causes an examination limitation/reduction in examination coverage. Components/welds with limitations were evaluated in terms of the feasibility of other NDE techniques or methods to increase coverage or for Code Case N-460 applicability.

OWNER: TENNESSEE VALLEY AUTHORITY OFFICE OF NUCLEAR POWER 1101 MARKET STREET CHATTANOOGA, TENNESSEE 37402	PLANT: BROWNS FERRY NUCLEAR PLANT PO BOX 2000 DECATUR, ALABAMA 35609-2000

UNIT: THREE CERTIFICATE OF AUTHORIZATION: NOT REQUIRED.

COMMERCIAL SERVICE DATE: MARCH 1, 1977

NATIONAL BOARD NUMBER FOR UNIT: NOT REQUIRED.

EXAMINATION LIMITATIONS

A tabulation of NDE examination receiving less than the required essentially 100% examination coverage during the unit 3 cycle 9 Inservice Inspection is contained in this Appendix.

The following items/components had examination limitations causing examination coverage to be less than 100%. TVA elected to use Code Case N-460 which states that when the entire examination volume or area cannot be examined due to interference by another component or part geometry, a reduction in examination coverage for Class 1 or Class 2 welds may be accepted provided the reduction in coverage for that weld is less than 10%.

SYSTEM	COMPONENT ID	EXAMINATION METHOD & COVERAGE ACHIEVED		REPORT NO.
RECIRC	GR-3-54(OL)	UT	98%	R-038
RECIRC	GR-3-57(OL)	UT	98%	R-039

OWNER: TENNESSEE VALLEY AUTHORITY OFFICE OF NUCLEAR POWER 1101 MARKET STREET CHATTANOOGA, TENNESSEE 37402	PLANT: BROWNS FERRY NUCLEAR PLANT PO BOX 2000 DECATUR, ALABAMA 35609-2000
UNIT: THREE	CERTIFICATE OF AUTHORIZATION: NOT REQUIRED.
COMMERCIAL SERVICE DATE: MARCH 1, 1977	
NATIONAL BOARD NUMBER FOR UNIT: NOT REQUIRED.	

APPENDIX VI

EXAMINATION PLAN (SECTION XI)
EXAMINATION PLAN FOR CLASS 1 & CLASS 2 COMPONENTS
COMPONENT ISOMETRIC DRAWINGS

OWNER: TENNESSEE VALLEY AUTHORITY OFFICE OF NUCLEAR POWER 1101 MARKET STREET CHATTANOOGA, TENNESSEE 37402	PLANT: BROWNS FERRY NUCLEAR PLANT PO BOX 2000 DECATUR, ALABAMA 35609-2000
UNIT: THREE	CERTIFICATE OF AUTHORIZATION: NOT REQUIRED.
COMMERCIAL SERVICE DATE: MARCH 1, 1977	
NATIONAL BOARD NUMBER FOR UNIT: NOT REQUIRED.	

EXAMINATION PLAN (SECTION XI)

The following printout is an outage ISI report designed to meet the reporting requirements of the ASME Section XI Code, 1989 Edition, Article IWA-6000. The report contains unit 3 cycle 9 ISI data for Class 1 and Class 2 components selected for ASME Section XI credit.

April 13, 2000

Hal Hodges

Subject: BFN Unit 3 Cycle 9 Scan Plan

Attached for your review and approval is the Unit 3 Cycle 9 Scan Plan. The Scan Plan includes 15 weld examinations. Due to redirection in the FAC program the FAC examinations for Code credit under the new Risked Informed Inservice Inspection Program has now increased to 13 grids. Also included are other component examinations required by Code and the augmented examination program.

Fred Froscello F.W. Froscello Jr 4/13/00
ISI Supervisor concurrence

Hal Hodges 4-13-00
ISI Engineer concurrence

Roger Bentley 4-13-00
Level III concurrence

AL Ladd 4/17/00
ANII concurrence

Revision 000
04/13/2000
Total Examinations: 52

TENNESSEE VALLEY AUTHORITY
BROWNS FERRY NUCLEAR POWER PLANT - UNIT 3
EXAMS SCHEDULED FOR CYCLE 09

SYSTEM	WELDNO	ISONO	CYCLE	ITEMNO	CATEGORY	EXREQ	EXSCHD	NDEPROC	CALSTD	COMPDIA	NOMTHCK	COMPDESA	COMPDESB
CRDS	RCRD-3-44	ISI-0332-C 02	09	NU0619	7112	B01-02	UT	N-UT-18	BF-29	04.00		PC,RED	PC,PIPE
CRDS	RCRD-3-45	ISI-0332-C 02	09	NU0619	7112	B01-02	UT	N-UT-18	BF-29	04.00		PC,PIPE	PC,RED
CRDS	RCRDS-3-03	ISI-0332-C 02	09	NU0619	7112	B01-02	UT	N-UT-18	BF-29	08.00		PBCC,TR	PC,RED
CRDS	RCRDS-3-03	ISI-0332-C 02	09	NU0619	7112	B01-02	UT	N-UT-18	BF-35	08.00		PBCC,TR	PC,RED
FWS	3RFWA-17R		09	R1.18	R-A	89E-02	UT	N-UT-26	FAC				
FWS	3RFWA-20E		09	R1.18	R-A	89E-02	UT	N-UT-26	FAC				
FWS	3RFWA-36E		09	R1.18	R-A	89E-02	UT	N-UT-26	FAC				
FWS	3RFWA-39E		09	R1.18	R-A	89E-02	UT	N-UT-26	FAC				
~~FWS~~	~~3RFWA-44E~~		~~09~~	~~R1.18~~	~~R-A~~	~~89E-02~~	~~UT~~	~~N-UT-26~~	~~FAC~~				
FWS	3RFWA-6E		09	R1.18	R-A	89E-02	UT	N-UT-26	FAC				
FWS	3RFWB-20E		09	R1.18	R-A	89E-02	UT	N-UT-26	FAC				
FWS	3RFWB-33E		09	R1.18	R-A	89E-02	UT	N-UT-26	FAC				
FWS	3RFWB-39E		09	R1.18	R-A	89E-02	UT	N-UT-26	FAC				
FWS	3RFWB-44E		09	R1.18	R-A	89E-02	UT	N-UT-26	FAC				
HPCIS	3-47B455-626	CHM-2413-C 02	09	F1.20C	F-A	89E-02	VT-3	N-VT-1		10.00		HVS	
MSS	3MS1A-13T		09	R1.18	R-A	89E-02	UT	N-UT-26	FAC				
MSS	3MS1D-17E		09	R1.18	R-A	89E-02	UT	N-UT-26	FAC				
MSS	3MS2B-6T		09	R1.18	R-A	89E-02	UT	N-UT-26	FAC				
MSS	HPAS-3-H-02	ISI-0355-C 02	09	F1.20C	F-A	89E-02	VT-3	N-VT-1		06.00		HVS	
MSS	HPAS-3-H-07	ISI-0355-C 02	09	F1.20C	F-A	89E-02	VT-3	N-VT-1		06.00		HVS	
RECIR	GR-3-03(OL)	ISI-0328-C 01	09	R1.16E	R-A	89E-02	UT	N-UT-66	BF-83	28.00		PC,OVLY	
RECIR	GR-3-03(OL)	ISI-0328-C 01	09	NU0313	E	B02-02	UT	N-UT-66	BF-83	28.00		PC,OVLY	
RECIR	GR-3-27(OL)	ISI-0328-C 02	09	R1.16E	R-A	89E-02	UT	N-UT-66	BF-83	28.00		PC,OVLY	

Delete 4/25/00 Rev. 02

SYSTEM	WELDNO	ISONO	CYCLE	ITEMNO	CATEGORY	EXREQ	EXSCHD	NDEPROC	CALSTD	COMPDIA	NOMTHCK	COMPDESA	COMPDESB
RECIR	GR-3-27(OL)	ISI-0328-C 02	09	NU0313	E	B02-02	UT	N-UT-66	BF-83	28.00		PC,OVLY	
RECIR	GR-3-53(OL)	ISI-0328-C 01	09	R1.16E	R-A	89E-02	UT	N-UT-66	BF-83	28.00		PC,OVLY	
RECIR	GR-3-53(OL)	ISI-0328-C 01	09	NU0313	E	B02-02	UT	N-UT-66	BF-83	28.00		PC,OVLY	
RECIR	GR-3-54(OL)	ISI-0328-C 01	09	R1.16E	R-A	89E-02	UT	N-UT-66	BF-83	28.00		PC,OVLY	
RECIR	GR-3-54(OL)	ISI-0328-C 01	09	NU0313	E	B02-02	UT	N-UT-66	BF-83	28.00		PC,OVLY	
RECIR	GR-3-57(OL)	ISI-0328-C 01	09	R1.16E	R-A	89E-02	UT	N-UT-66	BF-83	28.00		PC,OVLY	
RECIR	GR-3-57(OL)	ISI-0328-C 01	09	NU0313	E	B02-02	UT	N-UT-66	BF-83	28.00		PC,OVLY	
RECIR	GR-3-59(OL)	ISI-0328-C 02	09	R1.16E	R-A	89E-02	UT	N-UT-66	BF-83	28.00		PC,OVLY	
RECIR	GR-3-59(OL)	ISI-0328-C 02	09	NU0313	E	B02-02	UT	N-UT-66	BF-83	28.00		PC,OVLY	
RECIR	GR-3-60(OL)	ISI-0328-C 02	09	R1.16E	R-A	89E-02	UT	N-UT-66	BF-83	28.00		PC,OVLY	
RECIR	GR-3-60(OL)	ISI-0328-C 02	09	NU0313	E	B02-02	UT	N-UT-66	BF-83	28.00		PC,OVLY	
RECIR	GR-3-63	ISI-0328-C 02	09	0313	E	S01-02	UT	N-UT-65	SIZING	28.00		PC,VLV	PC,PIPE
RECIR	GR-3-64(OL)	ISI-0328-C 02	09	R1.16E	R-A	89E-02	UT	N-UT-66	BF-83	28.00		PC,OVLY	
RECIR	GR-3-64(OL)	ISI-0328-C 02	09	NU0313	E	B02-02	UT	N-UT-66	BF-83	28.00		PC,OVLY	
RECIR	RWR-3-001-G012	ISI-0328-C 01	09	R1.16A	R-A	89E-02	UT	N-UT-64	BF-79	12.00	0.602	PC,EL	PC,SE
RECIR	RWR-3-001-G012	ISI-0328-C 01	09	NU0313	A	B02-02	UT	N-UT-64	BF-79	12.00	0.602	PC,EL	PC,SE
RECIR	RWR-3-001-G015	ISI-0328-C 01	09	R1.16A	R-A	89E-02	UT	N-UT-64	BF-79	12.00		PE,EL	PC,PIPE
RECIR	RWR-3-001-G015	ISI-0328-C 01	09	NU0313	A	B02-02	UT	N-UT-64	BF-79	12.00		PE,EL	PC,PIPE
RECIR	RWR-3-002-G018	ISI-0328-C 02	09	R1.16A	R-A	89E-02	UT	N-UT-64	BF-79	12.00		PBC,A	PC,PIPE
RECIR	RWR-3-002-G018	ISI-0328-C 02	09	NU0313	A	B02-02	UT	N-UT-64	BF-79	12.00		PBC,A	PC,PIPE
RECIR	RWR-3-002-G022	ISI-0328-C 02	09	R1.16A	R-A	89E-02	UT	N-UT-64	BF-79	12.00		PBC,A	PC,PIPE
RECIR	RWR-3-002-G022	ISI-0328-C 02	09	NU0313	A	B02-02	UT	N-UT-64	BF-79	12.00		PBC,A	PC,PIPE
RHRS	DRHR-3-03B	ISI-0330-C 01	09	R1.16G	R-A	89E-02	VT-2	N-VT-4		24.00	1.219	PC,PIPE	PP,PIPE
RHRS	DRHR-3-03B	ISI-0330-C 01	09	NU0313	G	B02-02	VT-2	N-VT-4		24.00	1.219	PC,PIPE	PP,PIPE
RHRS	DRHR-3-13B	ISI-0330-C 01	09	R1.16G	R-A	89E-02	VT-2	N-VT-4		24.00	1.219	PC,PIPE	PP,PIPE
RHRS	DRHR-3-13B	ISI-0330-C 01	09	NU0313	G	B02-02	VT-2	N-VT-4		24.00	1.219	PC,PIPE	PP,PIPE

SYSTEM	WELDNO	ISONO	CYCLE	ITEMNO	CATEGORY	EXREQ	EXSCHD	NDEPROC	CALSTD	COMPDIA	NOMTHCK	COMPDESA	COMPDESB
RHRS	DSRHR-3-11(OL)	ISI-0330-C 01	09	R1.16E	R-A	89E-02	UT	N-UT-66	BF-48	20.00	1.031	PC,OVLY	
RHRS	DSRHR-3-11(OL)	ISI-0330-C 01	09	NU0313	E	B02-02	UT	N-UT-66	BF-48	20.00	1.031	PC,OVLY	
RPV	INTERIOR	ISI-0220-C 02	09	B13.10	B-N-1	89E-02	VT	VENDOR					

SCAN PLAN REVISION LOG

UNIT/ CYCLE	SCAN PLAN REV	SYSTEM	COMPONENT IDENTIFIER	ASME XI	REVISION	REASON FOR REVISION	APPROVED BY ISI/NDE SIGN AND DATE	APPROVED BY NDE LEVEL III SIGN AND DATE	DATA BASE REVISED BY ISO. SIGN AND DATE	DATA BASE REVISION VERIFIED BY ISI/NDE SIGN AND DATE
U3C9	1	03	3RFWA-45P		Add FAC grid 3RFWA-45P	Original FAC list did not identify RI to FAC comparison identified.	[illegible] 4-24-00	[illegible] 4-25-00	[illegible] 6/29/00	[illegible] 6/29/00
U3C9	2	03	3RFWA-44E		Delete GRID 3-RFWA-44E FAC From Scan Plan & Scope	ORIGINAL FAC LIST identified GRID IN ERROR	[illegible] 4/25/00	[illegible] 4-27-00	[illegible] 6/29/00	[illegible] 6/29/00

OWNER: TENNESSEE VALLEY AUTHORITY
NUCLEAR POWER GROUP
1101 MARKET STREET
CHATTANOOGA, TENNESSEE 37402

PLANT: BROWNS FERRY NUCLEAR PLANT
P.O. BOX 2000
DECATUR, ALABAMA 35609-2000

ASME SECTION XI
REQUIREMENT 89E-02
P09-02

UNIT: THREE CYCLE: 9 COMMERCIAL SERVICE DATE: MARCH 1, 1977

CERTIFICATION OF AUTHORIZATION: NOT REQUIRED
NATIONAL BOARD NUMBER FOR UNIT: NOT REQUIRED

System	Component Number	ISO Drawing	Category	Item Number	Exam Scheduled	Calibration Standard	Exam Date	Exam Report	Exam Results	Comments
FWS	3RFWA-17R	3-003-RI-ISI-02	R-A	R1.18	UT	FAC	20000423	R-061	A	MIN. 1.288" SEG.# 3-003-036
FWS	3RFWA-20E	3-003-RI-ISI-02	R-A	R1.18	UT	FAC	20000422	R-053	A	MIN. 0.783" SEG.# 3-003-037
FWS	3RFWA-36E	3-003-RI-ISI-02	R-A	R1.18	UT	FAC	20000422	R-050	A	MIN. 0.892" SEG.# 3-003-038
FWS	3RFWA-39E	3-003-RI-ISI-02	R-A	R1.18	UT	FAC	20000422	R-054	A	MIN. 0.753" SEG.# 3-003-039
FWS	3RFWA-45P	3-003-RI-ISI-02	R-A	R1.18	UT	FAC	20000422	R-060	A	MIN. 0.750" SEG.# 3-003-039
FWS	3RFWA-6E	3-003-RI-ISI-02	R-A	R1.18	UT	FAC	20000423	R-059	A	MIN. 1.375" SEG.# 3-003-006
FWS	3RFWB-20E	3-003-RI-ISI-02	R-A	R1.18	UT	FAC	20000422	R-052	A	MIN. 0.738" SEG.# 3-003-041
FWS	3RFWB-33E	3-003-RI-ISI-02	R-A	R1.18	UT	FAC	20000423	R-058	A	MIN. 0.762" SEG.# 3-003-042
FWS	3RFWB-39E	3-003-RI-ISI-02	R-A	R1.18	UT	FAC	20000422	R-055	A	MIN. 0.788" SEG.# 3-003-043
FWS	3RFWB-44E	3-003-RI-ISI-02	R-A	R1.18	UT	FAC	20000422	R-051	A	MIN. 0.806" SEG.# 3-003-043
HPCIS	3-47B455-626	3-CHM-2413-C-02	F-A	F1.20C	VT-3		20000420	R-034	A	AS FOUND SETTING 4500#
HPCIS	3-47B455-635	3-CHM-2413-C-02	F-A	F1.20	VT-3		20000427	R-068	A	WP-T41160-001
MSS	3MS1A-13T	3-003-RI-ISI-01	R-A	R1.18	UT	FAC	20000423	R-062	A	MIN. 0.659" SEG.# 3-001-036
MSS	3MS1D-17E	3-003-RI-ISI-02	R-A	R1.18	UT	FAC	20000423	R-063	A	MIN. 1.055" SEG.# 3-001-039
MSS	3MS2B-6T	3-003-RI-ISI-02	R-A	R1.18	UT	FAC	20000423	R-064	A	MIN. 1.002" SEG.# 3-001-037
MSS	HPAS-3-H-02	ISI-0355-C-02	F-A	F1.20C	VT-3		20000420	R-035	A	ACCEPT AS IS
MSS	HPAS-3-H-07	ISI-0355-C-02	F-A	F1.20C	VT-3		20000421	R-037	A	ACCEPT AS IS
MSS	PCV1-3-018-PBC	3-ISI-0313-B-01	B-G-2	B7.50	VT-1		20000404	R-031	A	24 NUTS plus 1 spare, NEW
MSS	PCV1-3-023-PBC	ISI-0313-B-01	B-G-2	B7.50	VT-1		20000404	R-032	A	24 NUTS plus 1 spare, NEW
MSS	PCV1-3-030-PBC	ISI-0313-B-01	B-G-2	B7.50	VT-1		20000404	R-030	A	12 STUDS, 24 NUTS, NEW
MSS	PCV1-3-030-PBC	ISI-0313-B-01	B-G-2	B7.70	VT-1		19991021	R-023	A	12 STUDS, 24 NUTS,Item # 83, 107, 115
MSS	PCV1-3-041-PBC	ISI-0313-B-01	B-G-2	B7.50	VT-1		20000404	R-029	A	12 STUDS, 24 NUTS, NEW

OWNER: TENNESSEE VALLEY AUTHORITY
NUCLEAR POWER GROUP
1101 MARKET STREET
CHATTANOOGA, TENNESSEE 37402

PLANT: BROWNS FERRY NUCLEAR PLANT
P.O. BOX 2000
DECATUR, ALABAMA 35609-2000

ASME SECTION XI
REQUIREMENT 89E-02
P09-02

UNIT: THREE CYCLE: 9 COMMERCIAL SERVICE DATE: MARCH 1, 1977

CERTIFICATION OF AUTHORIZATION: NOT REQUIRED
NATIONAL BOARD NUMBER FOR UNIT: NOT REQUIRED

System	Component Number	ISO Drawing	Category	Item Number	Exam Scheduled	Calibration Standard	Exam Date	Exam Report	Exam Results	Comments
MSS	PCV1-3-041-VBC	ISI-0313-B-01	B-G-2	B7.70	VT-1		19991101	R-025	A	VALVE S/N 1031; 12 SPLINE NUTS
MSS	PCV1-3-179-PBC	3-ISI-0313-B-01	B-G-2	B7.50	VT-1		20000404	R-033	A	24 NUTS plus 1 spare, NEW
RCICS	3-47B456-097	CHM-2412-C-01	F-A	F1.20	VT-3		19990506	R-012	A	3-SNUB-071-5010
RCICS	3-47B456-097	CHM-2412-C-01	F-A	F1.20	VT-3		19990507	R-021	A	3-SNUB-071-5011
RECIR	GR-3-03(OL)	3-ISI-0328-C-01	R-A	R1.16E	UT	BF-83	20000422	R-048	A	
RECIR	GR-3-27(OL)	3-ISI-0328-C-02	R-A	R1.16E	UT	BF-83	20000423	R-049	A	
RECIR	GR-3-53(OL)	3-ISI-0328-C-01	R-A	R1.16E	UT	BF-83	20000422	R-047	A	
RECIR	GR-3-54(OL)	3-ISI-0328-C-01	R-A	R1.16E	UT	BF-83	20000422	R-038	A	
RECIR	GR-3-57(OL)	3-ISI-0328-C-01	R-A	R1.16E	UT	BF-83	20000422	R-039	A	
RECIR	GR-3-59(OL)	3-ISI-0328-C-02	R-A	R1.16E	UT	BF-83	20000421	R-044	A	
RECIR	GR-3-60(OL)	3-ISI-0328-C-02	R-A	R1.16E	UT	BF-83	20000421	R-040	A	
RECIR	GR-3-64(OL)	3-ISI-0328-C-02	R-A	R1.16E	UT	BF-83	20000423	R-046	A	
RECIR	RWR-3-001-G012	3-ISI-0328-C-01	R-A	R1.16A	UT	BF-79	20000421	R-042	A	
RECIR	RWR-3-001-G015	3-ISI-0328-C-01	R-A	R1.16A	UT	BF-79	20000422	R-043	A	
RECIR	RWR-3-002-G018	3-ISI-0328-C-02	R-A	R1.16A	UT	BF-79	20000423	R-057	A	
RECIR	RWR-3-002-G022	3-ISI-0328-C-02	R-A	R1.16A	UT	BF-79	20000422	R-056	A	
RHRS	3-47B452-129	ISI-0395-C-12	F-A	F1.20	VT-3		19990506	R-015	A	ADH-300-2040 & 2041
RHRS	3-47B452-130	ISI-0395-C-13	F-A	F1.20	VT-3		19990506	R-016	A	3-SNUB-074-5057
RHRS	3-47B452-130	ISI-0395-C-13	F-A	F1.20	VT-3		19990506	R-013	A	3-SNUB-074-5056
RHRS	DRHR-3-03B	3-ISI-0330-C-01	R-A	R1.16G	VT-2		20000502	R-070	A	
RHRS	DRHR-3-13B	3-ISI-0330-C-01	R-A	R1.16G	VT-2		20000502	R-070	A	
RHRS	DSRHR-3-11(OL)	3-ISI-0330-C-01	R-A	R1.16E	UT	BF-48	20000420	R-041	A	

OWNER: TENNESSEE VALLEY AUTHORITY
NUCLEAR POWER GROUP
1101 MARKET STREET
CHATTANOOGA, TENNESSEE 37402

PLANT: BROWNS FERRY NUCLEAR PLANT
P.O. BOX 2000
DECATUR, ALABAMA 35609-2000

ASME SECTION XI
REQUIREMENT 89E-02
P09-02

UNIT: THREE CYCLE: 9

COMMERCIAL SERVICE DATE: MARCH 1, 1977

CERTIFICATION OF AUTHORIZATION: NOT REQUIRED
NATIONAL BOARD NUMBER FOR UNIT: NOT REQUIRED

System	Component Number	ISO Drawing	Category	Item Number	Exam Scheduled	Calibration Standard	Exam Date	Exam Report	Exam Results	Comments
RHRS	FCV74-67	3-ISI-0330-C-01	B-M-2	B12.50	VT-3		20000420	R-036	P	WO#99-007688-002
RPV	3-SI-3.3.1.A		B-P	B15.10	VT-2		20000503	R-070	A	
RPV	3-SI-3.3.1.A		B-P	B15.50	VT-2		20000503	R-070	A	
RPV	3-SI-3.3.1.A		B-P	B15.60	VT-2		20000503	R-070	A	
RPV	3-SI-3.3.1.A		B-P	B15.70	VT-2		20000503	R-070	A	
RPV	3-SI-3.3.10		C-H	C7.30	VT-2		19990324	R-011	A	
RPV	3-SI-3.3.13		D-B	D2.10	VT-2		19990125	R-006	A	
RPV	3-SI-3.3.14.A		D-B	D2.10	VT-2		19990121	R-008	A	CB CHILLER 3A CONDENSER RETURN HD
RPV	3-SI-3.3.14.A		D-B	D2.10	VT-2		19990208	R-007	A	
RPV	3-SI-3.3.14.B		D-B	D2.10	VT-2		19990222	R-009	A	
RPV	3-SI-3.3.4		C-H	C7.30	VT-2		19990315	R-010	A	
RPV	3-SI-3.3.6		C-H	C7.30	VT-2		19990108	R-004	A	
RPV	3-SI-3.3.6		C-H	C7.30	VT-2		19990319	R-022	A	
RPV	3-SI-3.3.8.A		C-H	C7.30	VT-2		19981113	R-002	A	
RPV	3-SI-3.3.8.C		C-H	C7.30	VT-2		19981030	R-003	A	
RPV	3-SI-3.3.8.C		C-H	C7.30	VT-2		19991029	R-024	A	
RPV	3-SI-3.3.9		C-H	C7.30	VT-2		19990114	R-005	A	
RPV	3-SI-3.3.9		C-H	C7.30	VT-2		19991104	R-026	A	
RPV	3-SI-3.3.9		C-H	C7.30	VT-2		20000225	R-028	A	WO#99-010859-001
RPV	3-SI-3.3.9		C-H	C7.70	VT-2		19991217	R-027	A	WO#99-007818-000
RPV	INTERIOR	3-ISI-0220-C-02	B-N-1	B13.10	VT		20000423	R-069	A	

OWNER: TENNESSEE VALLEY AUTHORITY OFFICE OF NUCLEAR POWER 1101 MARKET STREET CHATTANOOGA, TENNESSEE 37402	PLANT: BROWNS FERRY NUCLEAR PLANT PO BOX 2000 DECATUR, ALABAMA 35609-2000

UNIT: THREE CERTIFICATE OF AUTHORIZATION: NOT REQUIRED.

COMMERCIAL SERVICE DATE: MARCH 1, 1977

NATIONAL BOARD NUMBER FOR UNIT: NOT REQUIRED.

EXAMINATION PLAN OF CLASS 1 & CLASS 2 COMPONENTS

LEGEND FOR EXAMINATION PLAN CODE CREDIT EXAMINATIONS

EXREQ	DEFINITION
89E-02	ASME SECTION XI, 1989 EDITION, SECOND INTERVAL
S01-02	SUCCESSIVE EXAMINATION PERFORMED ON COMPONENTS DUE TO PREVIOUS FINDINGS
P09-02	BASELINE OR PRESERVICE EXAMINATIONS

EXAMINATION RESULTS: A = ACCEPTED
P = PASS

OWNER: TENNESSEE VALLEY AUTHORITY OFFICE OF NUCLEAR POWER 1101 MARKET STREET CHATTANOOGA, TENNESSEE 37402	PLANT: BROWNS FERRY NUCLEAR PLANT PO BOX 2000 DECATUR, ALABAMA 35609-2000

UNIT: THREE CERTIFICATE OF AUTHORIZATION: NOT REQUIRED.

COMMERCIAL SERVICE DATE: MARCH 1, 1977

NATIONAL BOARD NUMBER FOR UNIT: NOT REQUIRED.

ISOMETRICS DRAWINGS SHOWING COMPONENT LOCATION

REFERENCE DRAWINGS
TVA 47W335-14
TVA 47W335-17
RWC-3-004 (TVA WELD MAP)
DRAVO E-2460-1C-49

NOTE:
THIS DRAWING SUPERSEDES CHM-2143-C AND CHM-2144-C (ALL SHEETS)

MATERIAL SPECIFICATIONS

4" X 0.337" NOM. WALL - CS SCH. 80 A-333, GR1 (SEAMLESS)

6" X 0.562 NOM. WALL - CS, SCH. 120

8" X 0.593 NOM. WALL - CS, SCH. 100

CRD CAP 4" X 0.674" NOM. WALL SS

NOTE: ALL FEILD WELDS WERE MADE BY TVA

ASME CC-1 (EQUIVALENT)

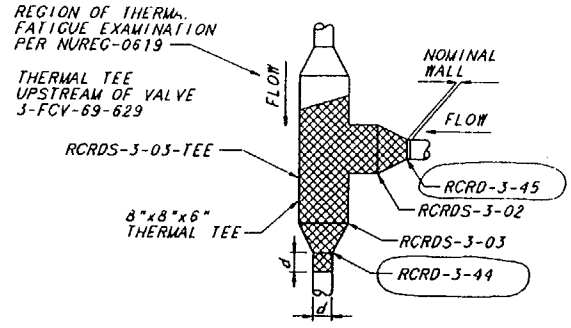

DET A

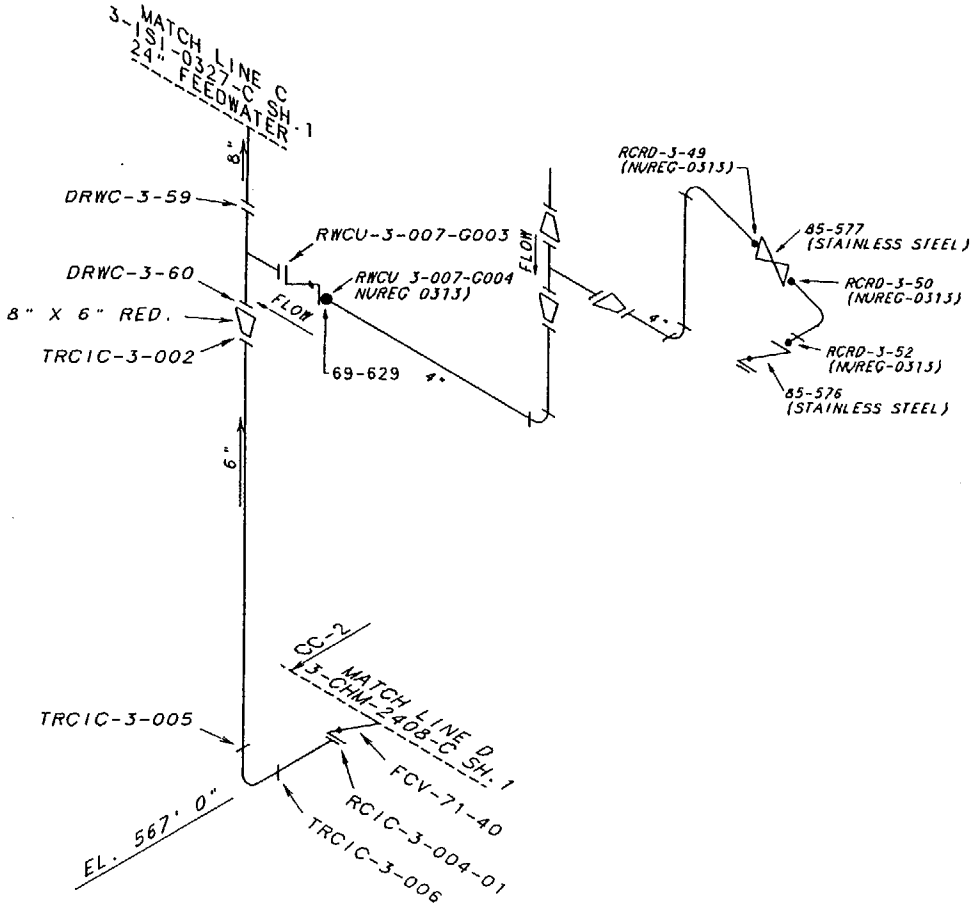

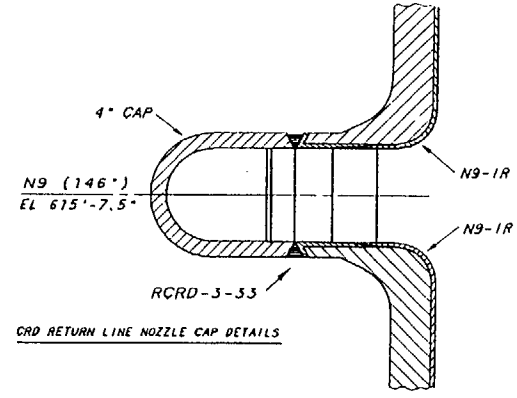

CRD RETURN LINE NOZZLE CAP DETAILS

REV	CHANGE REF	PREPARER	CHECKER	APPROVED	DATE
003	ADMIN	RGP	JT	RCG/H	2.5.93

REVISED PER RIMS MEMO R21 980202 001 AND REMOVED (DRAWING CLASSIFICATION (ADMINISTRATIVE REVISION)

TENNESSEE VALLEY AUTHORITY

BROWNS FERRY NUCLEAR PLANT
UNIT 3
REACTOR WATER CLEAN UP, RCIC, AND CRD
WELD IDENTIFICATION

DRAWN: PHB	DATE: 1-4-93	SCALE: NTS	CADAM/PCADAM
CHECKED: RPG	APPROVED: GLB	SHEET 02 OF 02	REV
SUBMITTED JES		3-1SI-0332 C	003
		CCD	

CADAM/PCADAM

ALL A/D HISTORY RESEARCHED • R000

REFERENCE DRAWINGS
0-47W400 SH 1 & 5
3P-336-2
3P-337-2
DRAWO E-2460-IC-56

LEGEND
RIGID SUPPORT
VARIABLE SUPPORT

ASME CC-2 (EQUIVALENT)

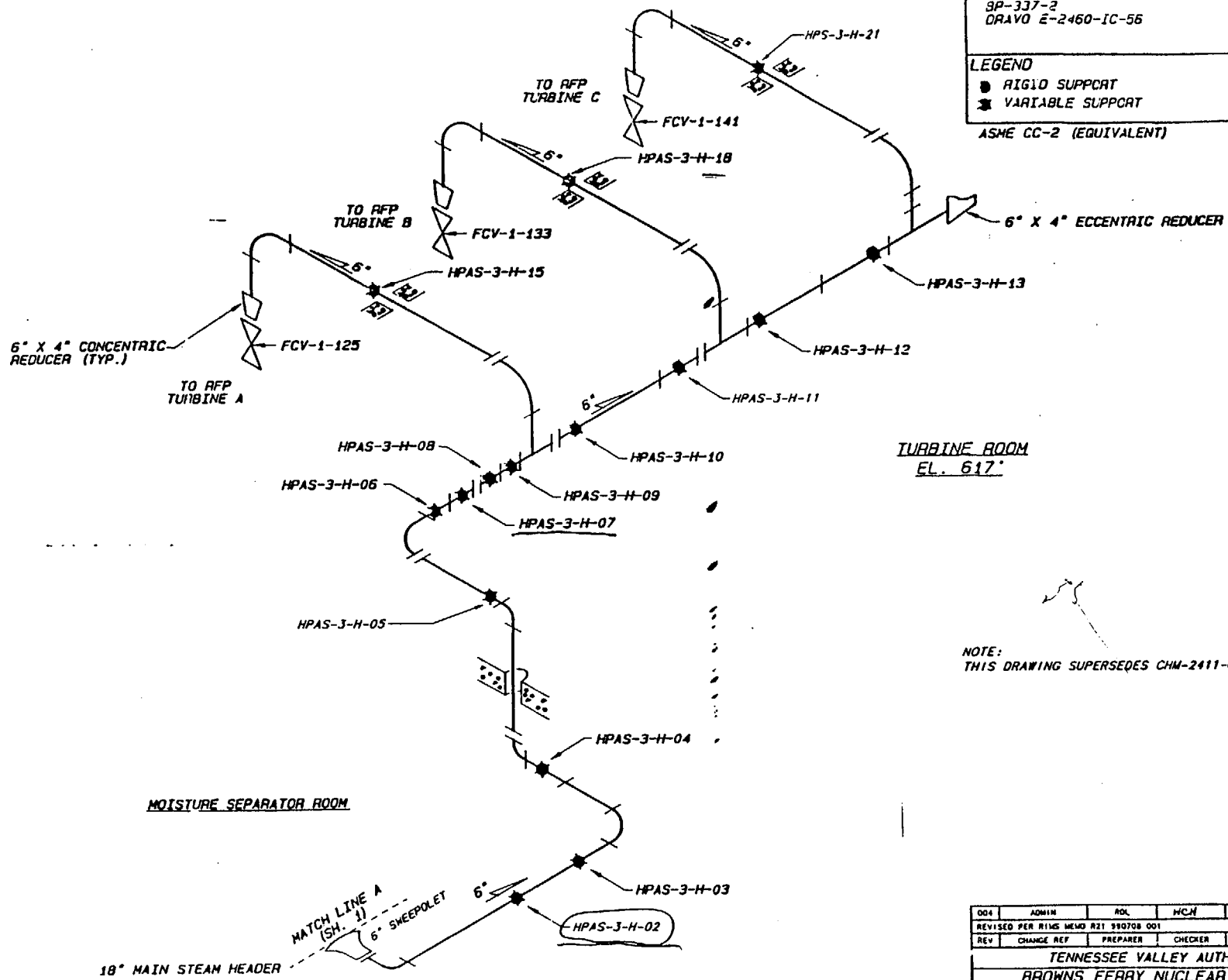

NOTE:
THIS DRAWING SUPERSEDES CHM-2411-C-2.

REV	CHANGE REF	PREPARER	CHECKER	APPROVED	DATE
004	ADMIN	ROL	WCH	ALO	7-13-89
REVISED PER RIMS MEMO R21 890708 001					

TENNESSEE VALLEY AUTHORITY
BROWNS FERRY NUCLEAR PLANT
UNIT #3
MAINSTEAM SYSTEM
SUPPORT LOCATIONS

DRAWN PHB DATE 4-20-89	SUBMITTED DATE 5/5/89	APPROVED DATE 5/11/89	SCALE NTS SHEET 2 OF 2 SHEET (S)
CHECKED DATE 5-4-89			DRAWING NO 3-1S1-0355-C REV 004
			CCD

HARDWARE	TEKTRONIX 4129
SOFTWARE	TEKNICAD 8.2
FLOPPY TAPE #	FLOPPY # BF-23

PROCAD

ALL A/D HISTORY RESEARCHED AT ROOO

ORIGINAL

REFERENCE DRAWINGS:
3-47E801-1
ADMIN

ASME CC-1 (EQUIVALENT)

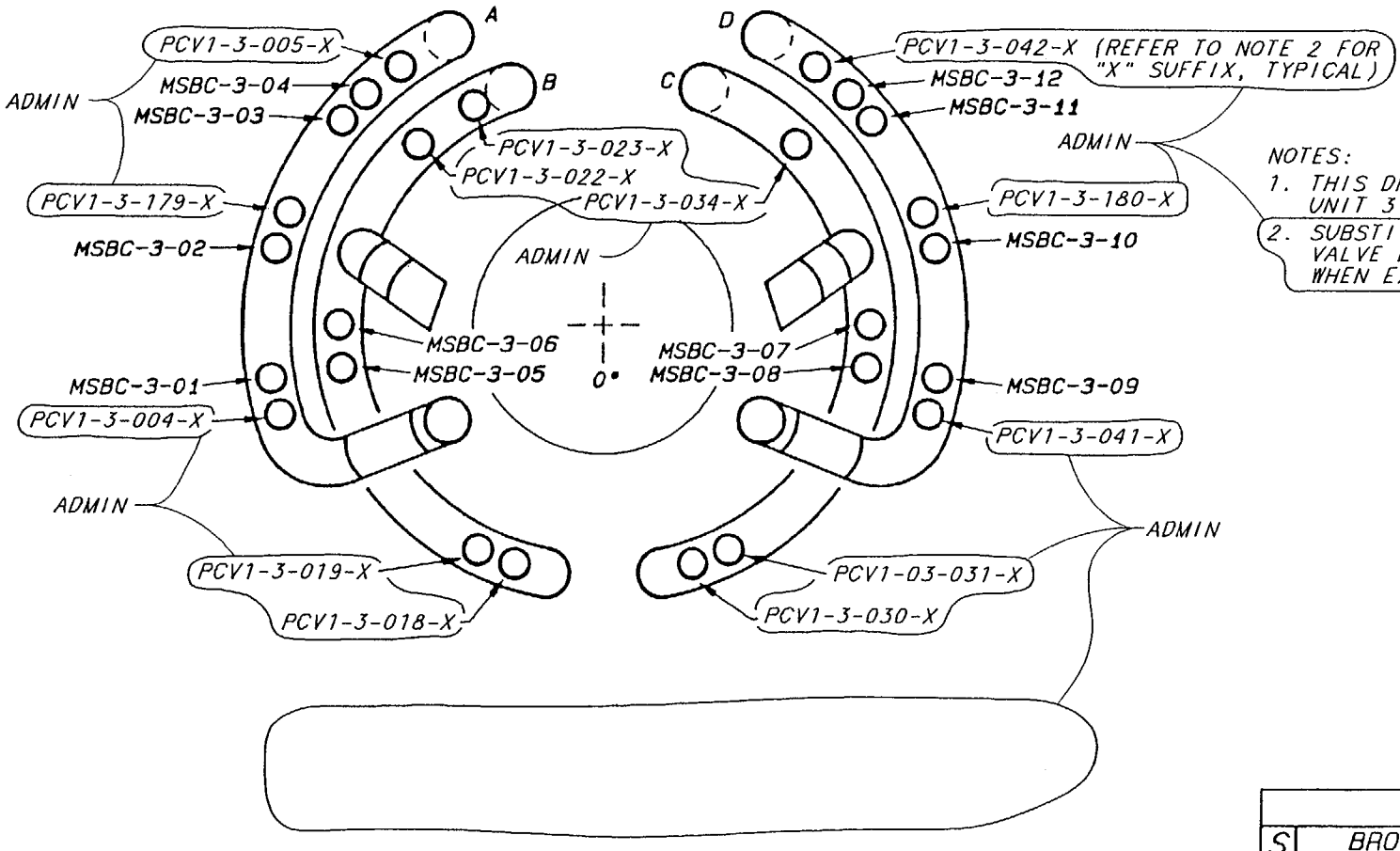

NOTES:
1. THIS DRAWING SUPERCEDES ISI-0022-A FOR UNIT 3 ONLY.
2. SUBSTITUTE "VBC" FOR "X" WHEN EXAMINING VALVE BODY BOLTING AND "PBC" FOR "X" WHEN EXAMINING VALVE TO PIPE BOLTING.

TENNESSEE VALLEY AUTHORITY

S BROWNS FERRY NUCLEAR PLANT
UNIT 3
MAINSTEAM SYSTEM
BOLTED CONNECTIONS

DRAWN: FHB	SUBMITTED	APPROVED	SCALE: NTS
DATE: 2-13-89	DATE: 5/8/89	DATE: 5/17/89	SHEET 1 OF 1 SHEET(S)
CHECKED:			DRAWING NO.
DATE: 5-8-89			3-ISI-0313-B

REV. 000

REV NO.	CHANGE REF	DATE	DFTR	CHKR	DSGN	RVWR	APPD	APPD	APPD	ISSD
000	CCD ADMIN		MLP		N/A		N/A	N/A		

ISSUED TO CREATE CCD, SUPERSEDES A/D ISI-0313-B-1 R1 AND TO DEPICT AS-CONSTRUCTED STATUS PER A/D R0; RIMS MEMO R92 960604 050 (ADMINISTRATIVE REVISION)

ALL A/D HISTORY RESEARCHED AT R000

HARDWARE	TEKTRONIX 4129
SOFTWARE	TEKNICAD 8.2
FLOPPY OR TAPE #	FLOPPY #BF4

PCADAM

CCD

REFERENCE DRAWINGS:
TVA 47K1544-3
GE 153F754
KELLOGG BF 2-180
NOTE: THIS DRAWING SUPERSEDES CHM-2139-C ALL SHEETS

MATERIAL SPECIFICATIONS:
A378, TP 304
4" X 0.337" NOM WALL THK. (SS)
28" X 1.138" NOM. WALL THK. (SS) SUCTION
28" X 1.322" NOM. WALL THK. (SS) DISCHARGE

SA403 WP316NG
12" X 0.602" MIN. WALL
22" INTEGRAL RED. TEE 0.980" MIN. WALL
28" X 22" CROSS 0.980" MIN. WALL
28" X 24" INTEGRAL TEE X 1.272" MIN. WALL

ASME CC-1 (EQUIVALENT)

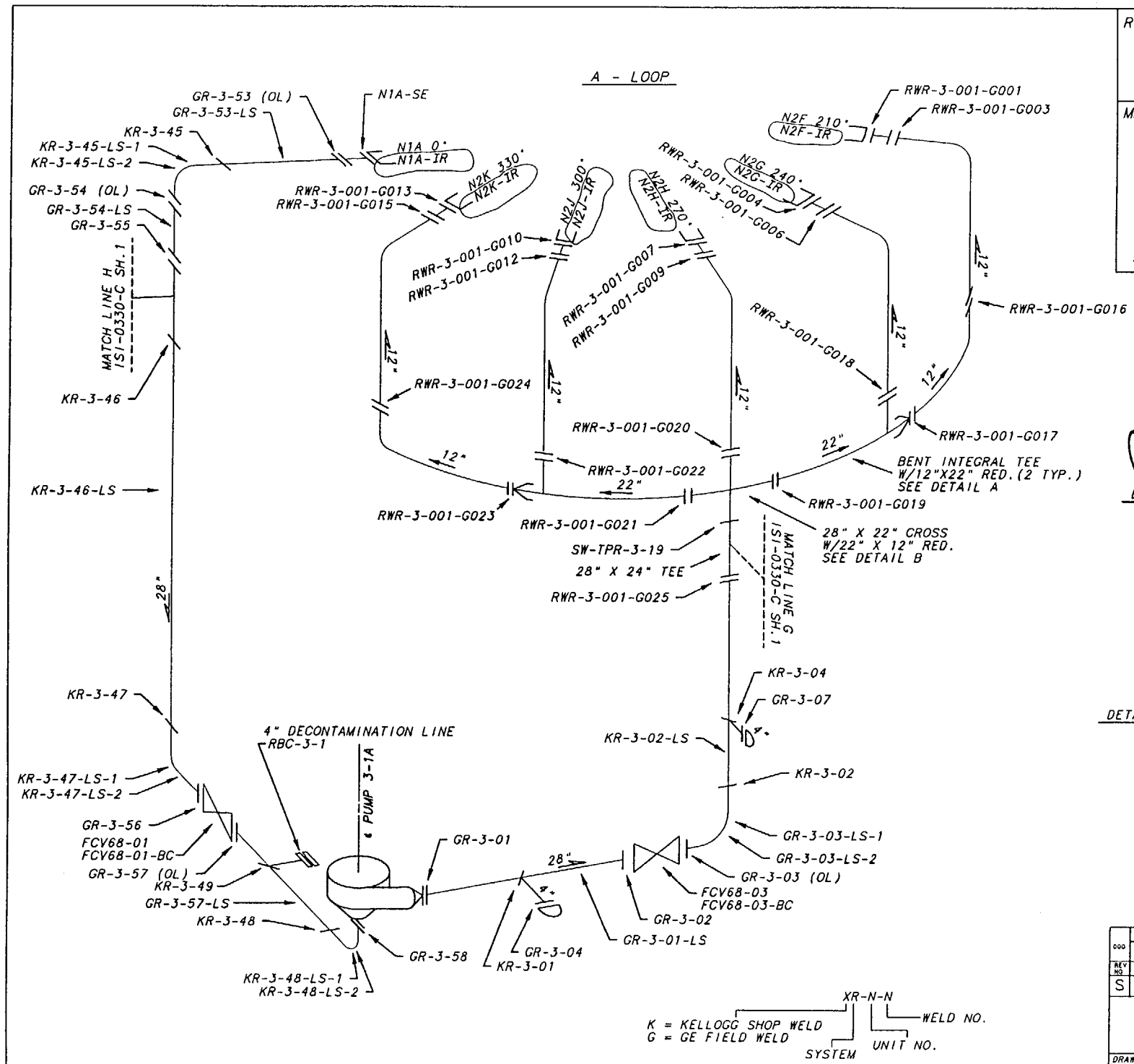

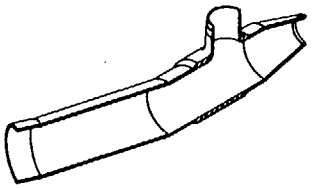

DETAIL A - ONE PEICE SPECIAL FORGING

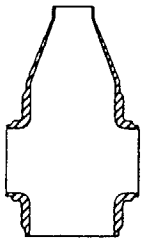

DETAIL B - ONE PEICE SPECIAL FORGING

REV NO	CHANGE REF	DATE	DFTN	CHKN	DSGN	RVWN	APPD	APPD	APPD	APPD
000	CCD ADMIN		ADL		N/A		N/A	N/A		
	ISSUED TO CREATE CCD. SUPERSEDES AS-DESIGNED 1S1-0328-C-1 A3 AND TO DEPICT AS CONSTRUCTED STATUS PER A1W5 W400 A14 970808 303; A/D AG-A1									

S TENNESSEE VALLEY AUTHORITY

BROWNS FERRY NUCLEAR PLANT
UNIT 3
RECIRCULATION SYSTEM
WELD LOCATIONS

DRAWN: PHB	SUBMITTED	APPROVED	SCALE NTS
DATE: 4-4-89	DATE: 5-18-89	DATE: 5-19-89	SHEET 1 OF 2 SHEET(S)
CHECKED: JES	EDC	GLB	DRAWING NO. 3-1S1-0328-C REV 000
DATE: 3-8-99			

CCD

PCADAM

ALL A/D HISTORY RESEARCHED AT R000

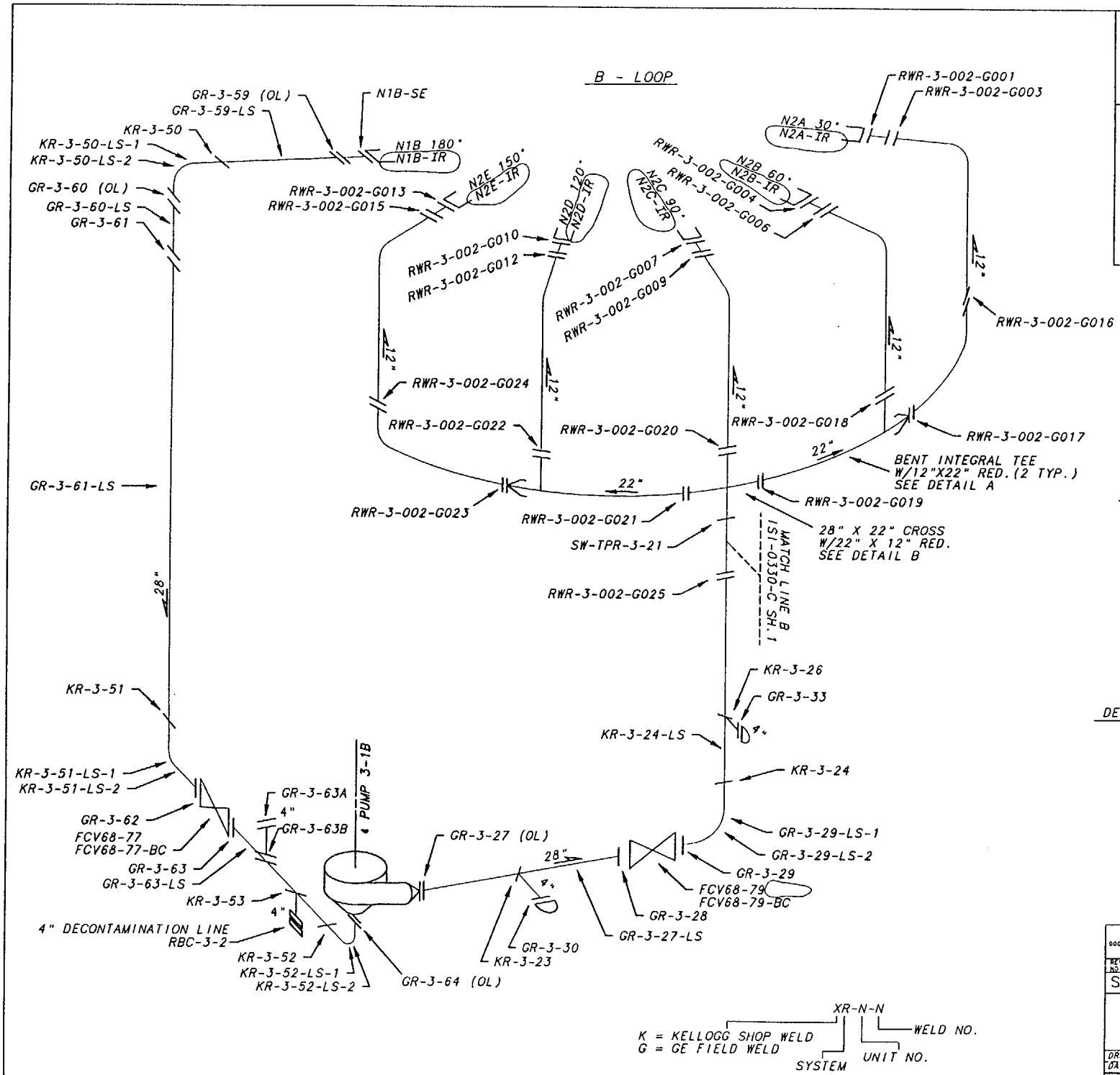

REFERENCE DRAWINGS:

TVA 47K1544-3
GE 153F754
KELLOGG 9F 2-180
NOTE: THIS DRAWING SUPERSEDES CHM-2139-C ALL SHEETS

MATERIAL SPECIFICATIONS:

A378, TP 304
4" X 0.337" NOM WALL THK. (SS)
28" X 1.138" NOM. WALL THK. (SS) SUCTION
28" X 1.322" NOM. WALL THK. (SS) DISCHARGE

SA403 WP316NG

12" X 0.602" MIN. WALL
22" INTEGRAL RED. TEE 0.980" MIN. WALL
28" X 22" CROSS 0.980" MIN. WALL
28" X 24" INEGRAL TEE X 1.272" MIN. WALL

ASME CC-1 (EQUIVALENT)

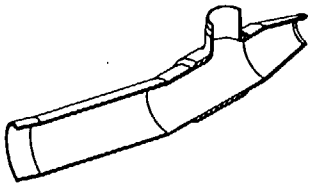

DETAIL A - ONE PEICE SPECIAL FORGING

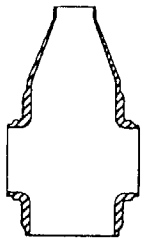

DETAIL B - ONE PEICE SPECIAL FORGING

REV NO.	CHANGE REF	DATE	DFTR	CHKR	DSGN	NVRM	1 APPD	2 APPL	3 APPD	
000	CCD ADMIN		RDL		N/A		N/A	N/A		
	ISSUED TO CREATE CCD. SUPERSEDES AS-DESIGNED, 1SI-0328-C-2 R4 AND TO DEPICT AS CONSTRUCTED STATUS PER R1W5 WEW3 R14 B73538 305, A/D R0-H3									

S — TENNESSEE VALLEY AUTHORITY

BROWNS FERRY NUCLEAR PLANT
UNIT 3
RECIRCULATION SYSTEM
WELD LOCATIONS

DRAWN: PHB	SUBMITTED	APPROVED	SCALE NTS
DATE: 4-4-89	DATE: 5-8-89	DATE 5-17-89	SHEET 2 OF 2 SHEET(S)
CHECKED: JES	LDC	GLB	DRAWING NO. 3-1SI-0328-C REV 000
DATE: 5-8-89			CCD

PCADAM

ALL A/D HISTORY RESEARCHED AT R000

REFERENCE DRAWINGS
47W452-H SERIES
47W3452 SERIES

THIS DRAWING SUPERSEDES A PORTION OF CHM-2410-C SH. 3

LEGEND
- MECHANICAL SNUBBER
- RIGID HANGER
- VARIABLE SUPPORT
- RIGID STRUT
- HYDRAULIC SNUBBER

CALCULATION BRANCH/PROJECT IDENTIFIER
CD-Q3074-921636

ASME CC-2 (EQUIVALENT)

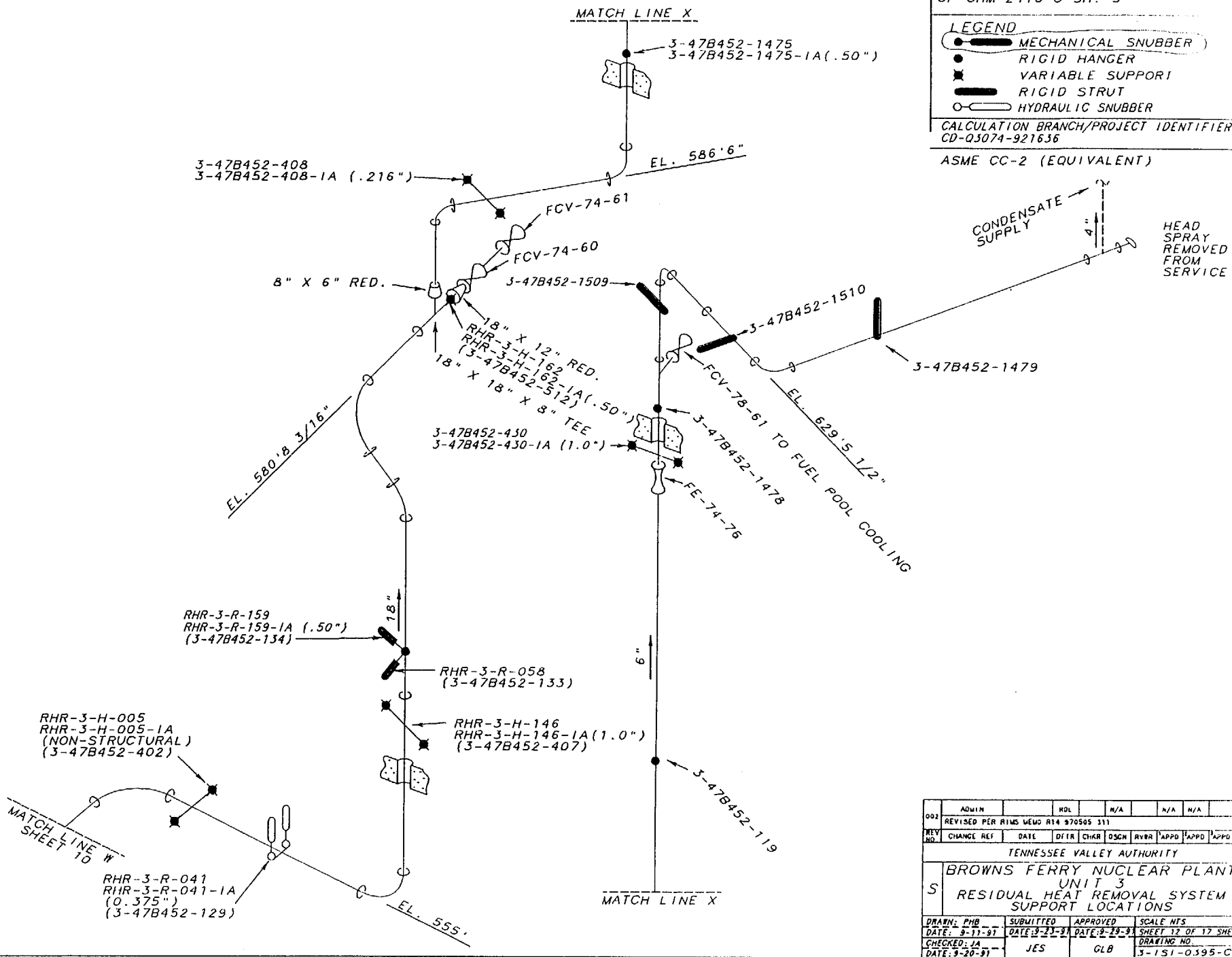

REV NO	CHANGE REF	DATE	DFTR	CHKR	DSGN	RVWR	1APPD	2APPD	3APPD	1SSU
002	ADMIN		KDL		N/A		N/A	N/A		
	REVISED PER RIMS MEMO R14 970505 311									

TENNESSEE VALLEY AUTHORITY

S — BROWNS FERRY NUCLEAR PLANT
UNIT 3
RESIDUAL HEAT REMOVAL SYSTEM
SUPPORT LOCATIONS

DRAWN: PHB	SUBMITTED	APPROVED	SCALE NTS
DATE: 9-11-91	DATE: 9-23-91	DATE: 9-29-91	SHEET 12 OF 17 SHEET(S)
CHECKED: JA	JES	GLB	DRAWING NO. 3-1S1-0395-C REV 002
DATE: 9-20-91			

THIS DRAWING IS UNDER CONFIGURATION CONTROL — CCD

PCADAM

ALL A/D HISTORY RESEARCHED • R000

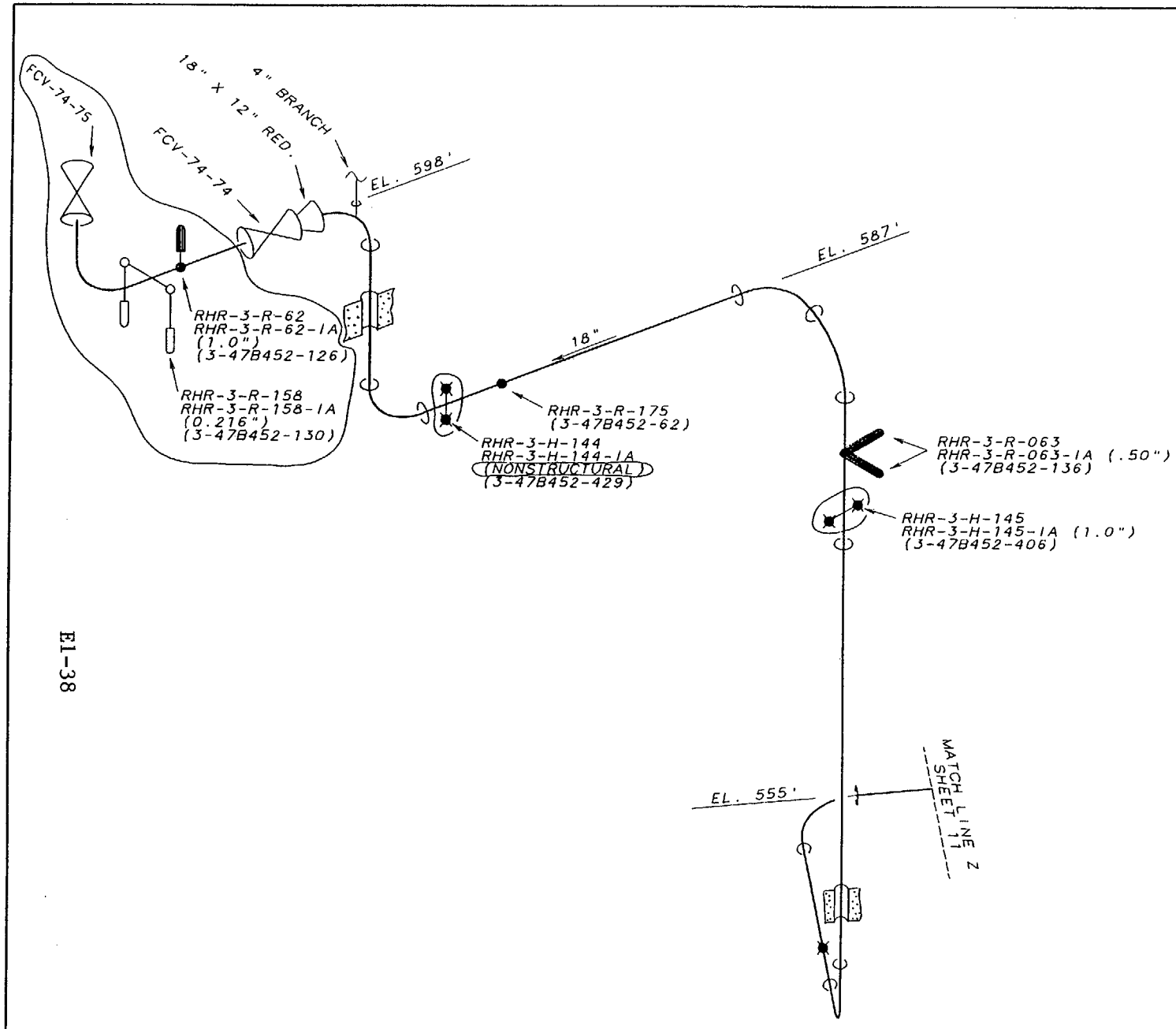

REFERENCE DRAWINGS
47W452-H SERIES
47W3452 SERIES
47W403-210
47W452-211

THIS DRAWING SUPERSEDES A PORTION OF CHM-2410-C SH. 4

LEGEND
- RIGID HANGER
- VARIABLE SUPPORT
- RIGID STRUT
- HYDRAULIC SNUBBER
- MECHANICAL SNUBBER

CALCULATION BRANCH/PROJECT IDENTIFIER: CD-Q3074-920008

ASME CC-2 (EQUIVALENT)

REV NO	CHANGE REF	DATE	DFTR	CHKR	DSGN	NVER	APPD	APPD	APPD	ISSU
001	ADMIN		VEM		N/A		N/A	N/A		
	REVISED SUPPORT TYPES, ADDED ADDITIONAL VALVE, PIPING, SUPPORTS AND LEGEND SYMBOLS PER RIMS MEMOS R92 960504 674 AND R92 960527 674									
	CCD/ADMIN	6-8-95	KED	N/A JK	N/A	JTL HLD/T	FBF	LRM	JEM/D	HLB SGD
000	ISSUED TO CREATE CCD. SUPERSEDES A/D 1S1-0395-C-13 R01 AND TO DEPICT A/C STATUS PER A/D R0 AND RIMS MEMO R92 950717 679 (ADMINISTRATIVE REVISION)									

TENNESSEE VALLEY AUTHORITY

S — BROWNS FERRY NUCLEAR PLANT
UNIT 3
RESIDUAL HEAT REMOVAL SYSTEM
SUPPORT LOCATIONS

DRAWN: PHB	SUBMITTED	APPROVED	SCALE NTS
DATE: 9-11-91	DATE: 9-23-91	DATE: 9-29-91	SHEET 13 OF 17 SHEET(S)
CHECKED: JH	JES	GLB	DRAWING NO: 3-1S1-0395-C
DATE: 9-20-91			REV 001

CCD

CADAM

ALL A/D HISTORY RESEARCHED AT R000

NOTE:

1. PIPE SEGMENTS CONTAINING TWO LONGITUDINAL SEAMS WILL BE IDENTIFIED AS:

   (BASE WELD NO.)-LS-1D (DOWNSTREAM)
   (BASE WELD NO.)-LS-2D (DOWNSTREAM)
   (BASE WELD NO.)-LS-1U (UPSTREAM)
   (BASE WELD NO.)-LS-2U (UPSTREAM)

   THE -LS-1 SEAM WILL BE NUMERICALLY CLOSEST TO 0° ON THE PIPE, AND THE -LS-2 SEAM WILL BE NUMERICALLY FARTHERMOST FROM 0° ON THE PIPE. (e.g. -LS-1 AT 130°, AND -LS-2 AT 310°)

2. PIPE SEGMENTS CONTAINING ONLY ONE LONGITUDINAL SEAM WILL BE IDENTIFIED AS

   (BASE WELD NO.)-LS-D (DOWNSTREAM)
   (BASE WELD NO.)-LS-U (UPSTREAM)

REFERENCE DRAWINGS:
47N1568
47W335-4 & 6
47W452 SERIES
DRAVO E-2460-IC-31, 32, & 33

NOTE: THIS DRAWING SUPERCEDES CHM-2141-C ALL SHEETS.

MATERIAL SPECIFICATION:
A-358 GR 304 CL.1, OR A-403WP304, OR A-106 GR.B, OR SA376 TP 316NC

24" X 1.219" NOM. WALL THK. SCH. 80 SS
20" X 1.031" NOM. WALL THK. SCH. 80 SS
20" X 1.031" NOM. WALL THK. SCH. 80 CS
6" X 0.432" NOM. WALL THK. SCH. 80S SS

ASME CC-1 (EQUIVALENT)

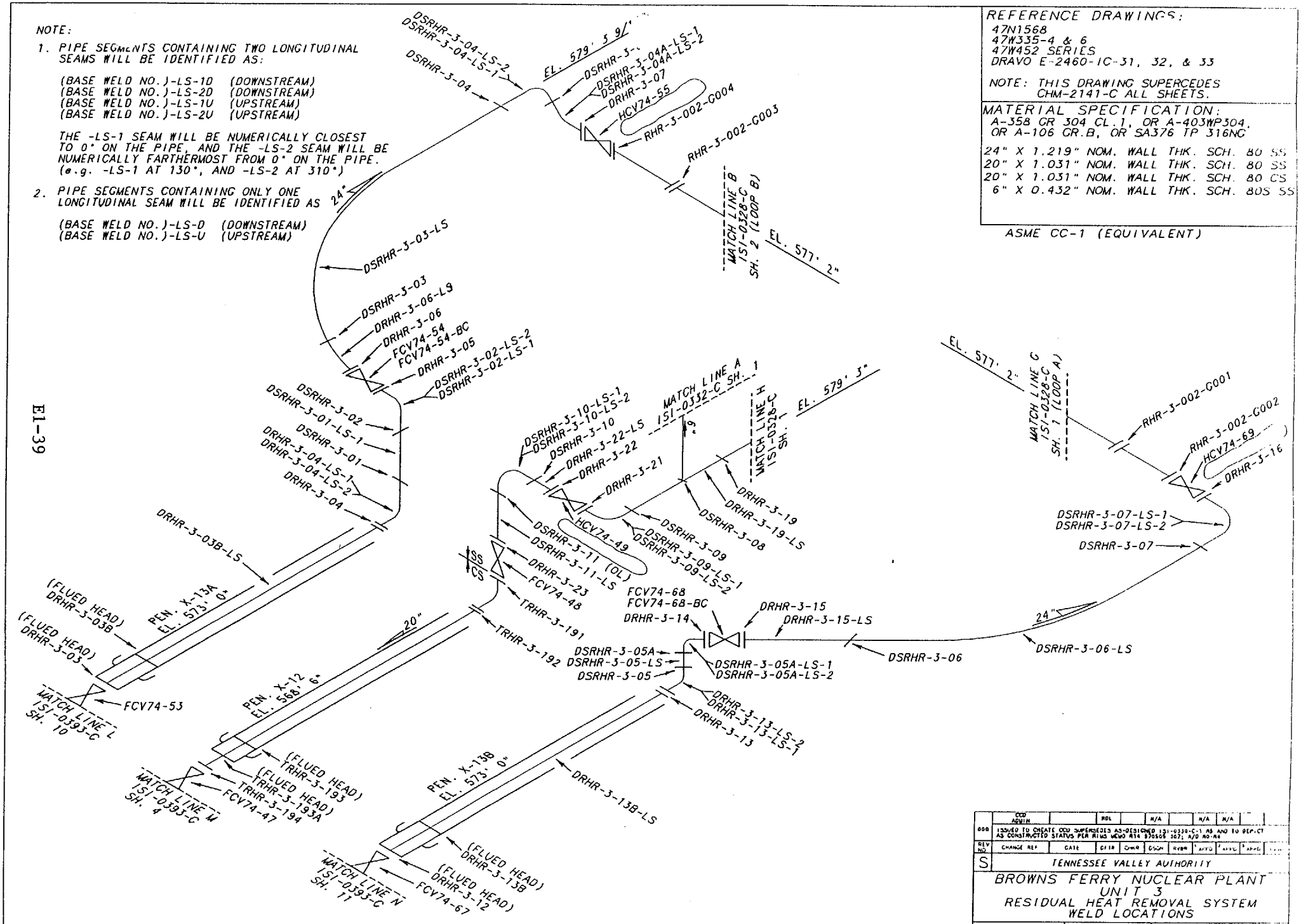

REV NO	CHANGE REF	DATE	DFTR	CHKR	DSGN	RVWR	APVD	APVD	APPD	
000	ISSUED TO CREATE CCU. SUPERSEDES AS-DESIGNED 1S1-0330-C-1 AS AND TO DEPICT AS CONSTRUCTED STATUS PER RIMS MEMO 414 870608 367; A/D A0-A4									
S	TENNESSEE VALLEY AUTHORITY									

BROWNS FERRY NUCLEAR PLANT
UNIT 3
RESIDUAL HEAT REMOVAL SYSTEM
WELD LOCATIONS

DRAWN: PHB	DATE: 5-17-89	SCALE: NTS	CADAM/SYSTEM
CHECKED: JES	APPROVED GLB	SHEET 01 OF 01	REV
SUBMITTED EDC		3-1S1-0330-C	000
		CCD	

PCADAM

ALL A/D HISTORY RESEARCHED AT R000

REFERENCE DR' 'GS
47W456-209
47W456-H SE1. _

LEGEND
- VARIABLE HANGER
- RIGID STRUT
- RIGID HANGER
- CONSTANT FORCE
- MECHANICAL SNUBBER
- HYDRAULIC SNUBBER
- ANCHOR

CALCULATION BRANCH/PROJECT IDENTIFIER
CD-Q3071-920917

CODE CLASS 2 EQUIVALENT

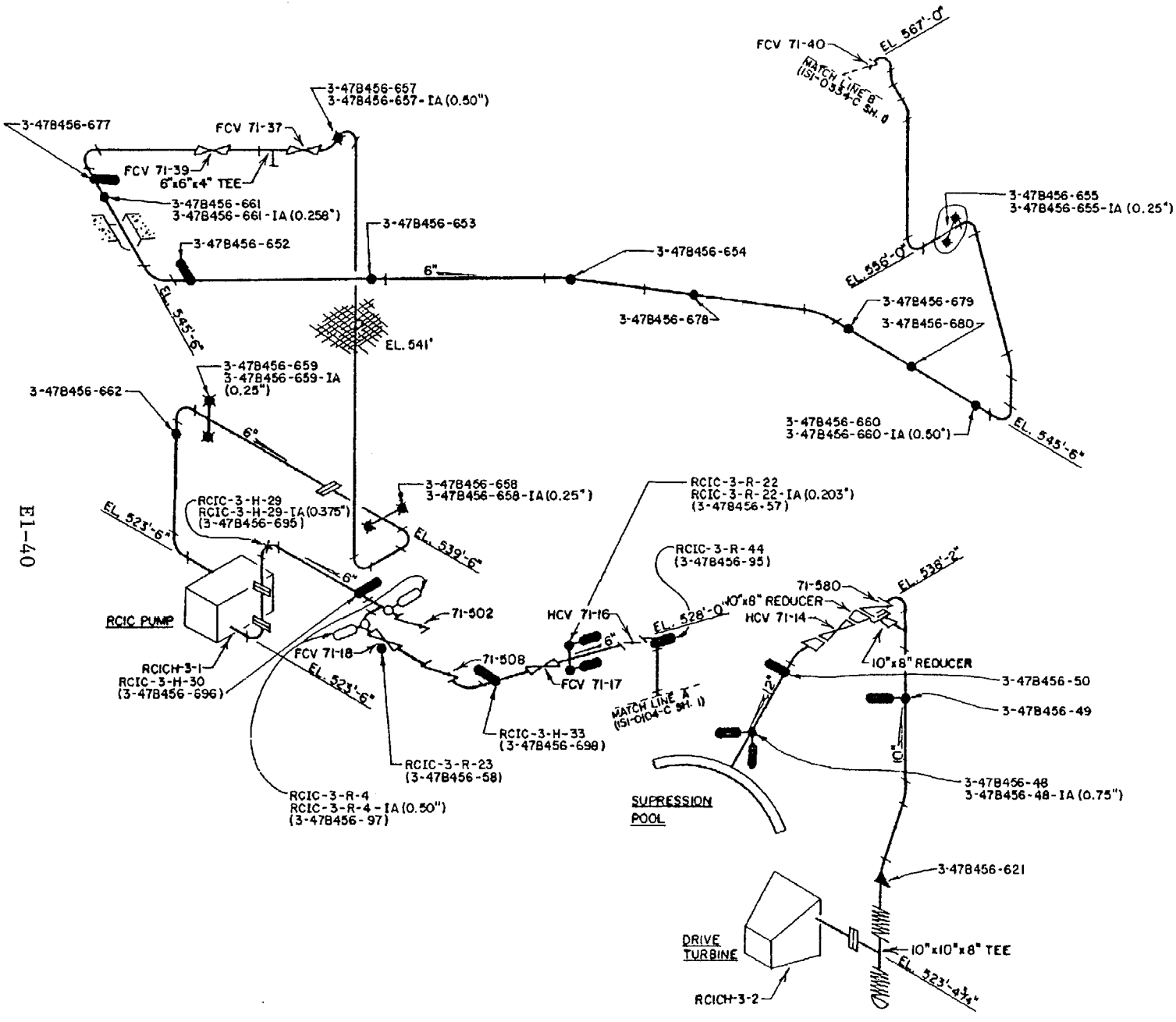

E1-40

REV NO.	CHANGE REF	DATE	DF IR	CHKR	DSGN	RVWR	APPD	APPD	APPD	ISSU
001	ADMIN		ROL		N/A		N/A	N/A		
	REVISED PER RIMS MEMO RDZ 860521 677									

TENNESSEE VALLEY AUTHORITY
DIVISION OF NUCLEAR POWER

S BROWNS FERRY NUCLEAR PLANT
UNIT #3
REACTOR CORE ISOLATION COOLING SYSTEM
HANGER LOCATIONS

DATE 7-14-83
3-CPM-2412 C
CCD R001

PCADAM

ALL A/D HISTORY RESEARCHED # ROCO

REFERENCE DRAW
47W455-H SERIES
CLASS 2

LEGEND
- ANCHOR
- RIGID HANGER
- VARIABLE HANGER
- RIGID STRUT
- MECHANICAL SNUBBER

CALCULATION BRANCH / PROJECT IDENTIFIER
CD-Q3073-910422
CD-Q3073-920475

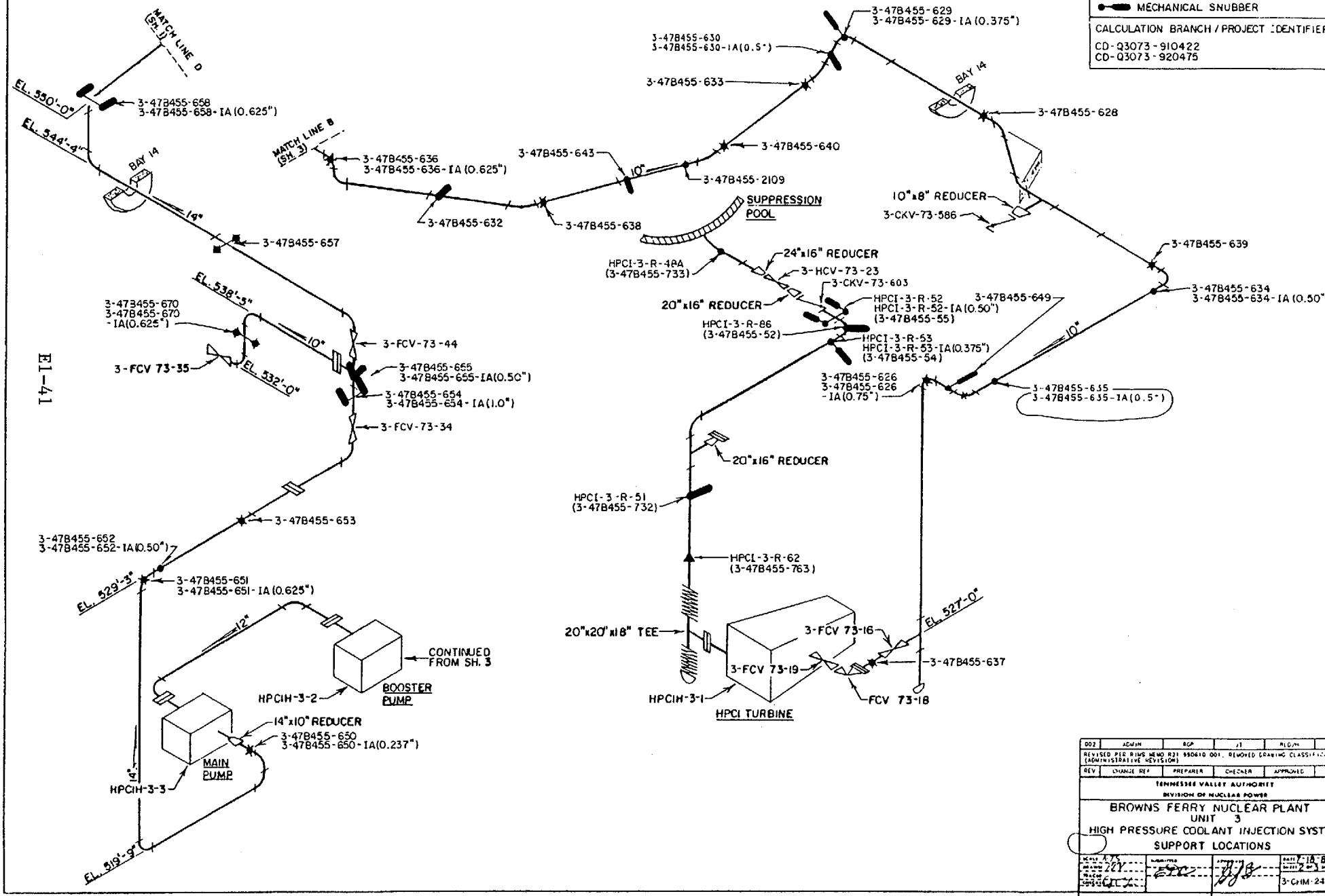

REV	CHANGE REF	PREPARER	CHECKER	APPROVED	DATE
002	ADMIN	RGP	JT	RLGM	
REVISED PER RIMS MEMO R21 890610 001. REMOVED DRAWING CLASSIFICATION (ADMINISTRATIVE REVISION)					

TENNESSEE VALLEY AUTHORITY
DIVISION OF NUCLEAR POWER

BROWNS FERRY NUCLEAR PLANT
UNIT 3
HIGH PRESSURE COOLANT INJECTION SYSTEM
SUPPORT LOCATIONS

DATE 7-18-83
SHEET 2 OF 3
3-CHM-2413-C
CCD R002

PCADAM

ALL A/D HISTORY RESEARCHED @ R000

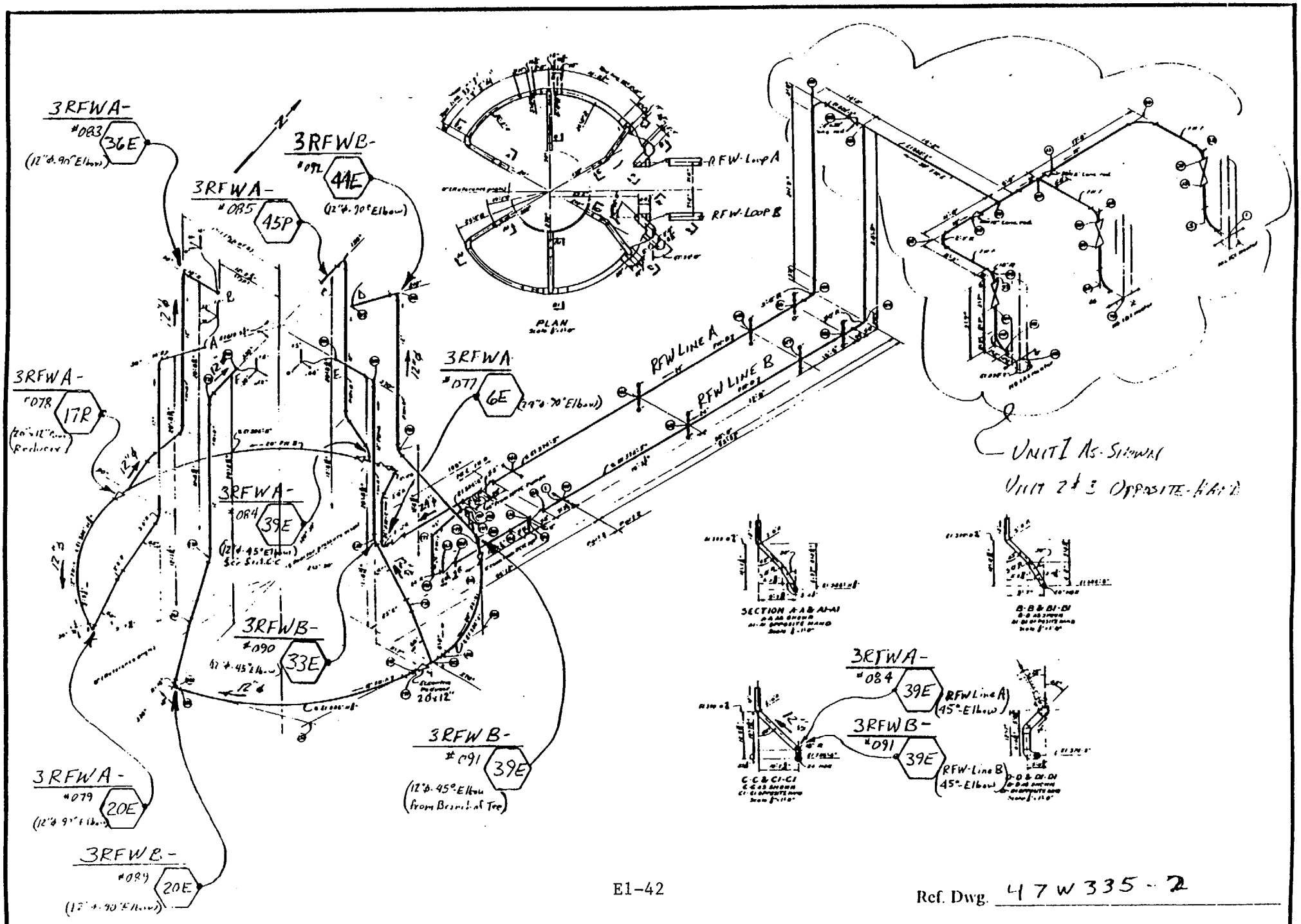

E1-42

Ref. Dwg. 47W335-2

System: RFW / 003

BFN U3C09 FAC SK # 03-07

REFERENCE DRAW
47W455-H SERIES
CLASS 2

LEGEND
- ANCHOR
- RIGID HANGER
- VARIABLE HANGER
- RIGID STRUT
- MECHANICAL SNUBBER

CALCULATION BRANCH / PROJECT IDENTIFIER
CD-Q3073-910422
CD-Q3073-920475

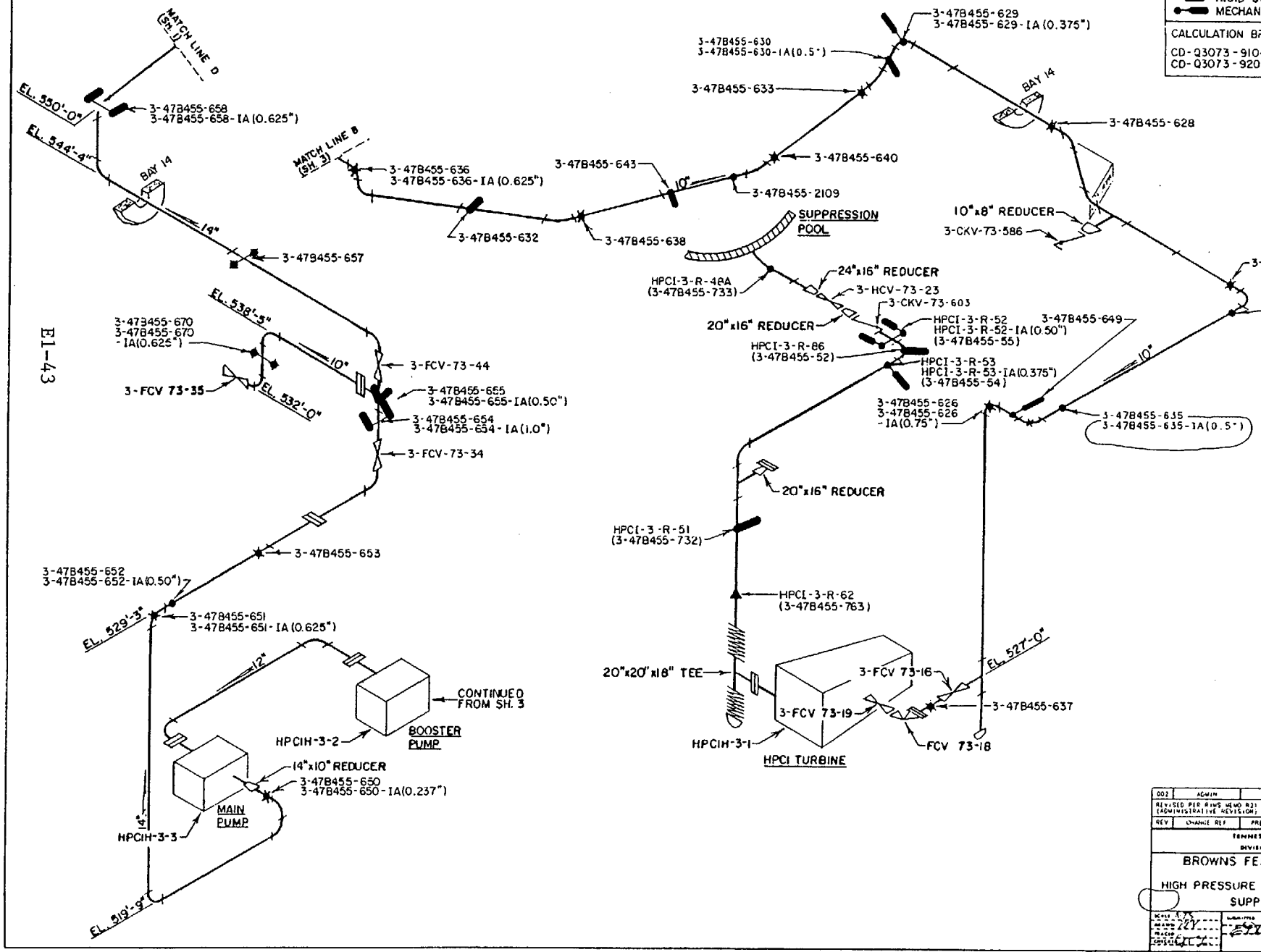

REV	CHANGE REF	PREPARER	CHECKER	APPROVED	DATE
002	ADMIN	RCP	JT	MEC,M	
REVISED PER RIMS MEMO R21 990610 001 REMOVED DRAWING CLASSIFICATION (ADMINISTRATIVE REVISION)					

TENNESSEE VALLEY AUTHORITY
DIVISION OF NUCLEAR POWER

BROWNS FERRY NUCLEAR PLANT
UNIT 3
HIGH PRESSURE COOLANT INJECTION SYSTEM
SUPPORT LOCATIONS

DATE 7-18-83
SHEET 2 OF 3 SHEETS
3-CHM-2413-C

CCD R002

PCADAM

ALL A/D HISTORY RESEARCHED @ R000

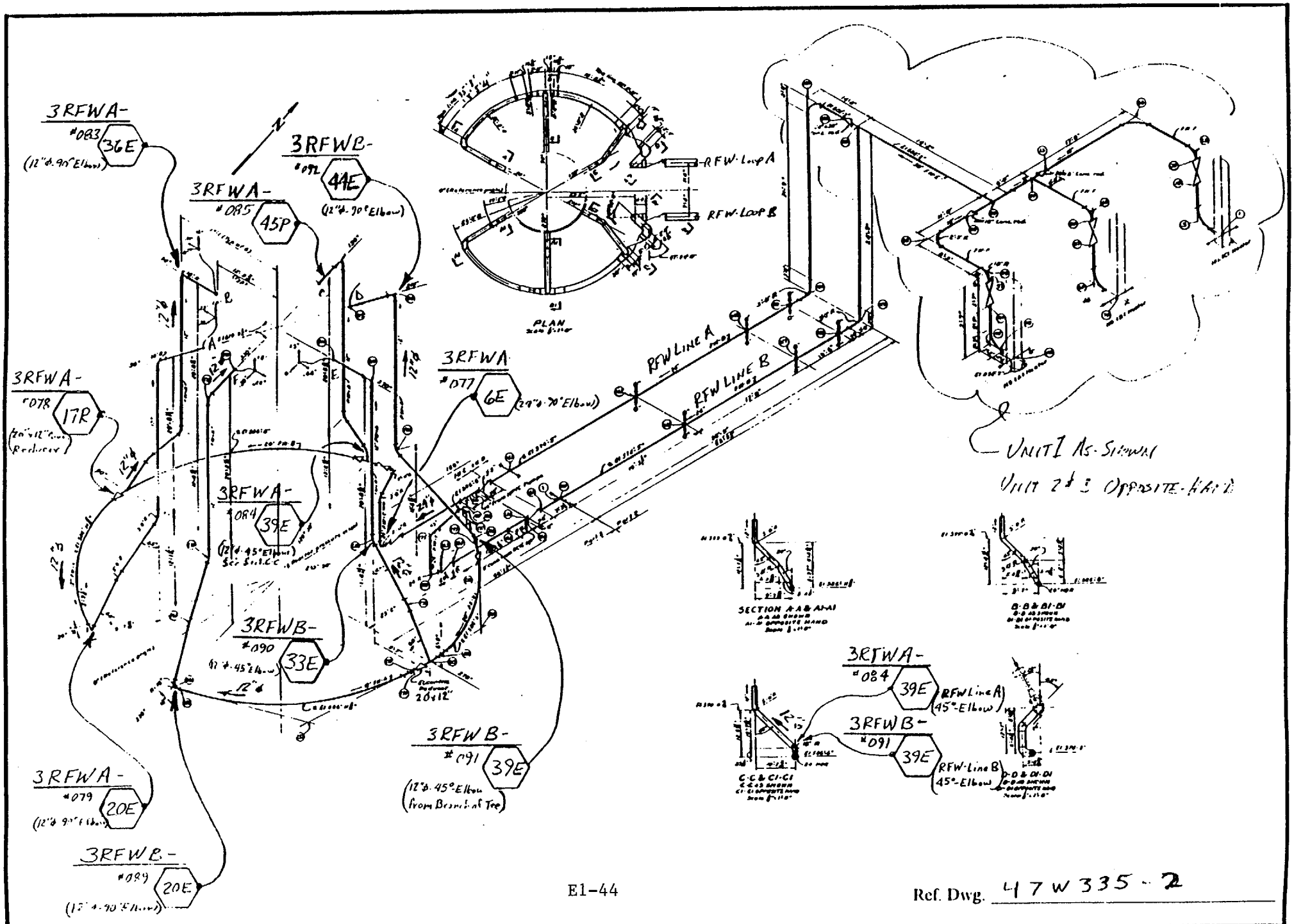

Ref. Dwg. 47W335-2

System: RFW / 003

BFN U3C09 FAC SK # 03-07

MAIN STEAM - RX VESSEL TO MANIFOLD

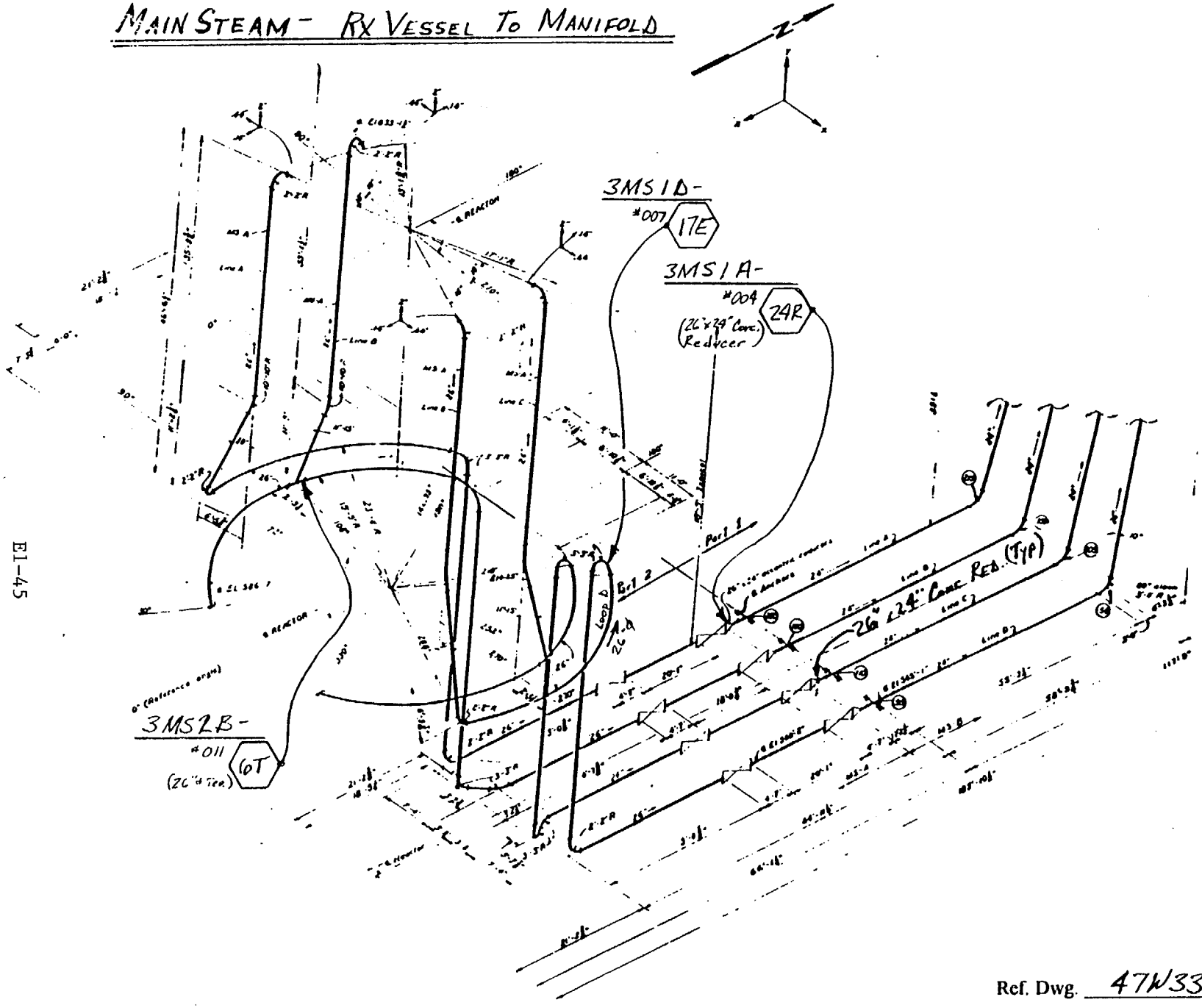

Ref. Dwg. 47W335-1

JMM 4-11-2000

System: MS / 001

BFN U3C09 FAC SK # 01-03a

B FAC SK 01-04

DRYWELL

3MS1A-

137

PLAN

SECTION A-A

SECTION C-C

SECTION D-D

SECTION E-E

SECTION F-F

SECTION G-G

SECTION H-H

SECTION B-B

TVA JUN 9 1975

APPROVED JUL 21 1975

01-04

NOT APPLICABLE FOR UNIT 2

OWNER: TENNESSEE VALLEY AUTHORITY OFFICE OF NUCLEAR POWER 1101 MARKET STREET CHATTANOOGA, TENNESSEE 37402	PLANT: BROWNS FERRY NUCLEAR PLANT PO BOX 2000 DECATUR, ALABAMA 35609-2000
UNIT: THREE	CERTIFICATE OF AUTHORIZATION: NOT REQUIRED.
COMMERCIAL SERVICE DATE: MARCH 1, 1977	
NATIONAL BOARD NUMBER FOR UNIT: NOT REQUIRED.	

APPENDIX VII

SUMMARY OF INDICATIONS
ADDITIONAL SAMPLES

OWNER: TENNESSEE VALLEY AUTHORITY OFFICE OF NUCLEAR POWER 1101 MARKET STREET CHATTANOOGA, TENNESSEE 37402	PLANT: BROWNS FERRY NUCLEAR PLANT PO BOX 2000 DECATUR, ALABAMA 35609-2000

UNIT: THREE CERTIFICATE OF AUTHORIZATION: NOT REQUIRED.

COMMERCIAL SERVICE DATE: MARCH 1, 1977

NATIONAL BOARD NUMBER FOR UNIT: NOT REQUIRED.

SUMMARY OF INDICATIONS

Indications detected during the performance of examinations for Browns Ferry Nuclear Plant unit 3 cycle 9 were evaluated in accordance with approved written procedures. Generally, examination results yield either No Recordable Indications (NRI) or Recordable Indications.

Recordable Indications were evaluated to determine their origin. Indications determined to be of a geometric, metallurgical, or similar origin were dispositioned as non-relevant. Indications determined to be of a non-geometric, non-metallurgical, or similar origin were dispositioned as relevant and required additional measures such as further evaluation in accordance with ASME Section XI acceptance standards, engineering analysis, repair, or replacement.

The following list is a summary of unacceptable indications detected and corrective measures taken during the unit 3 cycle 9 outage.

NOI NO.	CODE CAT.	COMPONENT IDENTIFIER	INDICATION DESCRIPTION	RESOLUTION	ADDITIONAL SAMPLES
U3C9-002	*F-A*	*HPAS-3-H-02*	*BENT ROD*	*EVALUATED ACCEPTABLE AS IS FOR CONT. SERVICE (No corrective measures required)*	*NOT REQUIRED*
U3C9-003	*F-A*	*HPAS-3-H-07*	*SETTING OUT OF RANGE*	*EVALUATED ACCEPTABLE AS IS FOR CONT. SERVICE (setting acceptable per calc. CD-Q2999-990049)*	*NOT REQUIRED*

OWNER: TENNESSEE VALLEY AUTHORITY OFFICE OF NUCLEAR POWER 1101 MARKET STREET CHATTANOOGA, TENNESSEE 37402	PLANT: BROWNS FERRY NUCLEAR PLANT PO BOX 2000 DECATUR, ALABAMA 35609-2000

UNIT: THREE CERTIFICATE OF AUTHORIZATION: NOT REQUIRED.

COMMERCIAL SERVICE DATE: MARCH 1, 1977

NATIONAL BOARD NUMBER FOR UNIT: NOT REQUIRED.

ADDITIONAL SAMPLES

No additional samples were required.

OWNER: TENNESSEE VALLEY AUTHORITY OFFICE OF NUCLEAR POWER 1101 MARKET STREET CHATTANOOGA, TENNESSEE 37402	PLANT: BROWNS FERRY NUCLEAR PLANT PO BOX 2000 DECATUR, ALABAMA 35609-2000

UNIT: THREE CERTIFICATE OF AUTHORIZATION: NOT REQUIRED.

COMMERCIAL SERVICE DATE: MARCH 1, 1977

NATIONAL BOARD NUMBER FOR UNIT: NOT REQUIRED.

ATTACHMENT 1

EXAMINATION PLAN (AUGMENTED) AND SUMMARY

OWNER: TENNESSEE VALLEY AUTHORITY OFFICE OF NUCLEAR POWER 1101 MARKET STREET CHATTANOOGA, TENNESSEE 37402	PLANT: BROWNS FERRY NUCLEAR PLANT PO BOX 2000 DECATUR, ALABAMA 35609-2000

UNIT: THREE CERTIFICATE OF AUTHORIZATION: NOT REQUIRED.

COMMERCIAL SERVICE DATE: MARCH 1, 1977

NATIONAL BOARD NUMBER FOR UNIT: NOT REQUIRED.

AUGMENTED EXAMINATION SUMMARY

This section includes information of the augmented examinations performed to comply with NRC or TVA self-imposed requirements. Typical sources include GE, Generic Letters, IE Bulletins, Technical Specifications, vendor recommendations, and industry experience. The following summarizes the augmented examinations performed during the unit 3 cycle 9 outage and references the corresponding paragraph in 3-SI-4.6.G. Additionally, the requirements for augmented examinations of the RPV are contained in Technical Instruction 0-TI-365

Paragraph 7.11.2 CRD Return Line Reroute (NUREG-0619)

Weld RCRD-3-45 shall be ultrasonically (UT) examined, including the base material on each side of the weld within one wall thickness. The pipe into which the CRD return flow is connected shall be UT examined to a distance of one pipe diameter downstream of the welded connection. Welds RCRDS-3-3 and RCRD-3-44 shall be UT examined along with the pipe on the downstream side.
These examinations revealed no evidence of cracking.

Paragraph 7.11.3 Augmented Examination of Austenitic Stainless Steel and Dissimilar Metal Welds Susceptible to IGSCC (Generic Letter 88-01 and NUREG-0313, Revision 2)

Austenitic stainless steel and dissimilar metal circumferential welds in piping four inches or larger NPS that contain reactor coolant at temperatures above 200 degrees F during power operation shall be examined in accordance with Generic Letter 88-01 and NUREG-0313, Revision 2.
There was no new IGSCC identified during cycle 9.

NUREG-0313 CATEGORY	TOTAL NUMBER OF WELDS	WELDS EXAMINED DURING U3/C9 Outage
A	46	4
B	N/A	N/A
C	80	0
D	2	0
E	10	10*
F	N/A	N/A
G	2	2 (VT-2)

*Category E weld GR-3-63 was examined in the flaw location only to determine flaw growth. The flaw remains essentially unchanged.

Paragraph 7.11.4

Technical Instruction 0-TI-365 REACTOR PRESSURE VESSEL INTERNALS INSPECTIONS (RPVII) UNITS 2 AND 3, Rev 02, required the following augmented examinations:

Downcomer Elbow	P4d	(enhanced VT-1)
Downcomer Sleeve	P8a	(enhanced VT-1)
	P8b	(enhanced VT-1)

OWNER: TENNESSEE VALLEY AUTHORITY OFFICE OF NUCLEAR POWER 1101 MARKET STREET CHATTANOOGA, TENNESSEE 37402	PLANT: BROWNS FERRY NUCLEAR PLANT PO BOX 2000 DECATUR, ALABAMA 35609-2000

UNIT: THREE CERTIFICATE OF AUTHORIZATION: NOT REQUIRED.

COMMERCIAL SERVICE DATE: MARCH 1, 1977

NATIONAL BOARD NUMBER FOR UNIT: NOT REQUIRED.

Spargers	S1	(enhanced VT-1)
	S2	(enhanced VT-1)
	S4	(enhanced VT-1)
	S3a	(VT-3)
	S3b	(VT-3)
	S3c	(VT-3)
	SB	(enhanced VT-1)
	PB	(enhanced VT-1)
Repairs & Indications	repair bracket & Arc strikes @ Loop A 120°	(VT-1)
	T-Box repair bracket @ 240°	(VT-1)
	linear indication @ 240°	(VT-1)
	linear indication @ 350°	(VT-1)
	arc strike/linear ind. @ 355°	(VT-1)
"C" Downcomer Lower section replacement	Repaired U3/C8	(VT-1)
Core Shroud Welds	H8	(enhanced VT-1)
	H9	(enhanced VT-1)
Jet Pump Holddown Beam and Bolt	bolt-hole region BB-1 and transition arm region BB-2	(VT-3)
Riser Pipe Welds	RS-1 (1 - 20)	(enhanced VT-1)
	RS-2 (1 - 20)	(enhanced VT-1)
	RS-3 (jet pumps 1-4, 7-10, 11-12, 13, 17-18, 19-20)	(enhanced VT-1)
Diffuser and Tailpipe	DF-2 (jet pumps 1-4, 7-10, 11-12, 13, 17-18, 19-20)	(enhanced VT-1)

OWNER: TENNESSEE VALLEY AUTHORITY OFFICE OF NUCLEAR POWER 1101 MARKET STREET CHATTANOOGA, TENNESSEE 37402	PLANT: BROWNS FERRY NUCLEAR PLANT PO BOX 2000 DECATUR, ALABAMA 35609-2000

UNIT: THREE CERTIFICATE OF AUTHORIZATION: NOT REQUIRED.

COMMERCIAL SERVICE DATE: MARCH 1, 1977

NATIONAL BOARD NUMBER FOR UNIT: NOT REQUIRED.

Adapter/Lower Ring	AD-1 (jet pumps 1-4, 7-10, 11-12, 13, 17-18, 19-20)	(enhanced VT-1)
	AD-2 (jet pumps 1-4, 7-10, 11-12, 13, 17-18, 19-20)	(enhanced VT-1)
	AD-3a & b (jet pumps 1-4, 7-10, 11-12, 13, 17-18, 19-20)	(enhanced VT-1)
Top Guide	Locations 1, 4, 6, 10, 12, 13, 15, 16 (baseline)	(enhanced VT-1)
	Locations 2 &3	(enhanced VT-1)
	Location 11	(enhanced VT-1)
Core Plate	Location 8	(enhanced VT-1)
	Location 9	(enhanced VT-1)
	Holddown bolts Location 10	(enhanced VT-1)

The examinations were completed with no new recordable indication identified. The previously recorded indications remain essentially unchanged.

OWNER: TENNESSEE VALLEY AUTHORITY OFFICE OF NUCLEAR POWER 1101 MARKET STREET CHATTANOOGA, TENNESSEE 37402	PLANT: BROWNS FERRY NUCLEAR PLANT PO BOX 2000 DECATUR, ALABAMA 35609-2000
UNIT: THREE	CERTIFICATE OF AUTHORIZATION: NOT REQUIRED.
COMMERCIAL SERVICE DATE: MARCH 1, 1977	
NATIONAL BOARD NUMBER FOR UNIT: NOT REQUIRED.	

ATTACHMENT 2

APPENDIX IWE - BFN CONTAINMENT INSERVICE INSPECTION

BROWNS FERRY NUCLEAR PLANT

CONTAINMENT INSERVICE INSPECTION PROGRAM

UNIT 3 CYCLE 9 SUMMARY REPORT

BFN CONTAINMENT INSERVICE INSPECTION PROGRAM
U3C9 SUMMARY REPORT

Unit:	BFN Unit 3
Refueling Outage:	U3C9
Period/Interval:	First Period of the First Interval
Code of Record:	ASME Section XI, 1992 Edition/1992 Addenda
Program Procedure:	0-TI-376, Revision 0

Summary of Examinations

The records contained within the Unit 3 Cycle 9 Plant Report comprise Containment Inservice examinations performed to implement the requirements of ASME Section XI Subsection IWE. The examinations are summarized as follows:

Table IWE-2500-1, Examination Category E-A, Containment Surfaces

In-service and pre-service examinations were conducted on areas identified for coating replacement. All examinations required by Category E-A for the First Period are complete. Visual examination of the drywell liner below the moisture seal barrier (MSB) was performed in areas where the MSB was excavated for replacement.

Table IWE-2500-1, Examination Category E-C, Containment Surfaces Requiring Augmented Examination

100% of the Pressure Suppression Chamber air/water interface area was examined U3C8. This is the only area currently identified as an augmented area for BFN Unit 3. All examinations required by Category E-C for the First Period are complete.

Table IWE-2500-1, Examination Category E-D, Seals, Gaskets, and Moisture Barriers

Four seals were examined U3C9. During the first period, 18 of 84 seals (21%) were examined. In addition, Pre-service examinations were performed on all seals replaced.

Table IWE-2500-1, Examination Category E-G, Pressure Retaining Bolting

One bolted connection was examined U3C9. This was the only bolted connection not previously inspected that was disassembled during the outage. During the first period, 8 of 25 bolted connections (32%) were examined. Pre-service examinations were performed on all bolting replaced.

Table IWE-2500-1, Examination Category E-P, All Pressure Retaining Components

Appendix J Type B testing was completed on the Drywell Personnel Airlock in accordance with the Containment Leak Rate Program and 3-SR-3.6.1.2.1.

Appendix J Type B testing was completed on the Containment seals and gaskets in accordance with the Containment Leak Rate Program and 3-SI-4.7.A.2.g-2/Fha.

VT-2 examinations were completed for bolting replaced on the drywell head.

TVA SELF-IMPOSED EXAMINATIONS

TVA Self-Imposed Examinations

UT thickness measurements were taken on the drywell liner in the area immediately below the drywell flange from elevation 640'4" to 637'4" at four locations (0°, 45°, 180°, and 270°) in accordance with 0-TI-376, Appendix 9.6 to obtain data for determination of Table IWE-2500-1 augmented examination requirements. The data indicated that the condition of the drywell steel liner plate in this area is good, and that this area should not be categorized for augmented examination. This information exam (WO 00-002221-000) is included in the Unit 3 Cycle 9 Plant Report.

U3C9 EXAMINATION REPORTS

UNIT 3 CY. . 9 IWE REPORTS

Report Number	Component ID	EXAM	NOI	Comments
CISI-39-001	DW FLG-3-X-1A/1B	PSI		Pre-Service Inspection O-rings
CISI-39-002	Bay 1, 2, 3, 4, 6, 8, 9, 10, 13, 14	In-Service	**NOI U3C9-001(COMPLETE)**	Coatings (WO-98-013911-000)
CISI-39-003	PEN 3-X-1AA/1AB/1BA/1BB	PSI		Pre-Service Inspection O-rings
CISI-39-004	DW LNR-3-3	In-Service	**NOI U3C9-006 (COMPLETE)**	Coatings (WO# 98-013912-000)
CISI-39-005	DW LNR-3-1B, 1C, 1D, 1E	Information Only		UT Flange Region (WO# 00-002221-
CISI-39-006	DW FLG-3-1A	In-Service	**NOI U3C9-005 (COMPLETE)**	In-Service Inspection O-rings
CISI-39-007	MSB-3-1, 2, 3	In-Service	**NOI U3C9-004 (COMPLETE)**	DW MSB (WO 00-001314-000)
CISI-39-008	DW FLG-3-1B	In-Service	**NOI U3C9-007(COMPLETE)**	In-Service Inspection O-rings
CISI-39-009	DW LNR-3-3	In-Service	**NOI U3C9-006 (COMPLETE)**	Coatings (WO# 98-013912-000)
CISI-39-010	DW LNR-3-3	In-Service	**NOI U3C9-006 (COMPLETE)**	Coatings (WO# 98-013912-000)
CISI-39-011	DW FLG-3-1	Pre-Service		New Bolting(WO#99-011184-000)
CISI-39-012	MSB-3-1, 2, 3	Pre-Service		DW MSB (WO 00-001314-000)
CISI-39-013	3-X-21 CAP	Pre-Service		DCN 50063 (WO#99-011145-001)
CISI-39-014	DW LNR-3-3	Pre-Service		Coatings (WO# 98-013912-000)
CISI-39-015	SHR LG-3-5A/5B	In-Service	**NOI U3C9-008 (COMPLETE)**	O-rings (WO#98-014761-000)
CISI-39-016	SHR LG-3-5A/5B	Pre-Service		O-rings (WO#98-014761-000)
CISI-39-017	SHR LG-3-5	In-Service		Bolting and Mating Surfaces
CISI-39-018	Bay 1, 2, 3, 4, 6, 8, 9, 10, 13, 14	Pre-Service		Coatings (WO-98-013911-000)
CISI-39-019	3-X-20 CAP	Pre-Service		DCN 50063 (WO#99-011145-002)
CISI-39-020	SL-3-X-200AA/SL-3-X-200AB	Pre-Service		O-rings (WO#99-011366-000)
CISI-39-021	SL-3-X-2A/SL-3-X-2B	Pre-Service		O-rings (WO#99-011203-000)
CISI-39-022	3-X-20 CAP	Pre-Service		VT-2
CISI-39-023	3-X-21 CAP	Pre-Service		VT-2
CISI-39-024	DW FLG-3-1	Pre-Service		VT-2 Replaced Bolts

OWNER: TENNESSEE VALLEY AUTHORITY OFFICE OF NUCLEAR POWER 1101 MARKET STREET CHATTANOOGA, TENNESSEE 37402	PLANT: BROWNS FERRY NUCLEAR PLANT PO BOX 2000 DECATUR, ALABAMA 35609-2000

UNIT: THREE CERTIFICATE OF AUTHORIZATION: NOT REQUIRED.

COMMERCIAL SERVICE DATE: MARCH 1, 1977

NATIONAL BOARD NUMBER FOR UNIT: NOT REQUIRED.

ATTACHMENT 3

SUPPLEMENTAL SUBMITTAL (CORRECTED INFORMATION BFN UNIT 2)

OWNER: TENNESSEE VALLEY AUTHORITY OFFICE OF NUCLEAR POWER 1101 MARKET STREET CHATTANOOGA, TENNESSEE 37402	PLANT: BROWNS FERRY NUCLEAR PLANT PO BOX 2000 DECATUR, ALABAMA 35609-2000
UNIT: THREE	CERTIFICATE OF AUTHORIZATION: NOT REQUIRED.
COMMERCIAL SERVICE DATE: MARCH 1, 1977	
NATIONAL BOARD NUMBER FOR UNIT: NOT REQUIRED.	

ATTACHMENT 3

SUPPLEMENTAL SUBMITTAL (CORRECTED INFORMATION - BFN UNIT 2 ISI SECOND INSPECTION INTERVAL (3rd PERIOD UNIT 2 CYCLE 10 REFUELING OUTAGE CONDUCTED IN APRIL/MAY 1999)

The Unit 2 Cycle 10 Refueling Outage Ninety Day Summary Report NIS-1 reported that ASME XI Code Category D-B was 100% complete. A review and update of the ASME XI ISI Unit 2 Second Inspection Interval revealed that there were four Integral Attachment-Component Supports/Restraints Item # D2.20 which had not been examined. This changed the percentage of completed components in Code Category D-B to 94%, which meets the requirements for percentages completed for the third period up to cycle 10. These components are scheduled to be examined during the Unit 2 Cycle 11 Refueling Outage which will close the Second Inspection Interval.

OWNER: TENNESSEE VALLEY AUTHORITY OFFICE OF NUCLEAR POWER 1101 MARKET STREET CHATTANOOGA, TENNESSEE 37402	PLANT: BROWNS FERRY NUCLEAR PLANT PO BOX 2000 DECATUR, ALABAMA 35609-2000
UNIT: THREE	CERTIFICATE OF AUTHORIZATION: NOT REQUIRED.
COMMERCIAL SERVICE DATE: MARCH 1, 1977	
NATIONAL BOARD NUMBER FOR UNIT: NOT REQUIRED.	

ATTACHMENT 4

BFN UNIT 3 CYCLE 9 SCAN PLAN (ALL EXAMS)

EXAM REQUIREMENTS
89E-02 B01-02
B02-02 P07-02
S01-02 V01-02

OWNER: TENNESSEE VALLEY AUTHORITY
NUCLEAR POWER GROUP
1101 MARKET STREET
CHATTANOOGA, TENNESSEE 37402

PLANT: BROWNS FERRY NUCLEAR PLANT
P.O. BOX 2000
DECATUR, ALABAMA 35609-2000

UNIT: THREE CYCLE: 9 COMMERCIAL SERVICE DATE: MARCH 1, 1977

CERTIFICATION OF AUTHORIZATION: NOT REQUIRED
NATIONAL BOARD NUMBER FOR UNIT: NOT REQUIRED

System	Component Number	ISO Drawing	Exam Requirement	Category	Item Number	Exam Scheduled	Calibration Standard	Exam Date	Exam Report	Exam Results	Comments
CRDS	RCRD-3-44	3-ISI-0332-C-02	B01-02	7112	NU0619	UT	BF-29	20000424	R-065	A	
CRDS	RCRD-3-45	3-ISI-0332-C-02	B01-02	7112	NU0619	UT	BF-29	20000424	R-066	A	
CRDS	RCRDS-3-03	3-ISI-0332-C-02	B01-02	7112	NU0619	UT	BF-29	20000424	R-067	A	
CRDS	RCRDS-3-03	3-ISI-0332-C-02	B01-02	7112	NU0619	UT	BF-35	20000424	R-067	A	
FWS	3RFWA-17R	3-003-RI-ISI-02	89E-02	R-A	R1.18	UT	FAC	20000423	R-061	A	MIN. 1.288" SEG.# 3-003-036
FWS	3RFWA-20E	3-003-RI-ISI-02	89E-02	R-A	R1.18	UT	FAC	20000422	R-053	A	MIN. 0.783" SEG.# 3-003-037
FWS	3RFWA-36E	3-003-RI-ISI-02	89E-02	R-A	R1.18	UT	FAC	20000422	R-050	A	MIN. 0.892" SEG.# 3-003-038
FWS	3RFWA-39E	3-003-RI-ISI-02	89E-02	R-A	R1.18	UT	FAC	20000422	R-054	A	MIN. 0.753" SEG.# 3-003-039
FWS	3RFWA-45P	3-003-RI-ISI-02	89E-02	R-A	R1.18	UT	FAC	20000422	R-060	A	MIN. 0.750" SEG.# 3-003-039
FWS	3RFWA-6E	3-003-RI-ISI-02	89E-02	R-A	R1.18	UT	FAC	20000423	R-059	A	MIN. 1.375" SEG.# 3-003-006
FWS	3RFWB-20E	3-003-RI-ISI-02	89E-02	R-A	R1.18	UT	FAC	20000422	R-052	A	MIN. 0.738" SEG.# 3-003-041
FWS	3RFWB-33E	3-003-RI-ISI-02	89E-02	R-A	R1.18	UT	FAC	20000423	R-058	A	MIN. 0.762" SEG.# 3-003-042
FWS	3RFWB-39E	3-003-RI-ISI-02	89E-02	R-A	R1.18	UT	FAC	20000422	R-055	A	MIN. 0.788" SEG.# 3-003-043
FWS	3RFWB-44E	3-003-RI-ISI-02	89E-02	R-A	R1.18	UT	FAC	20000422	R-051	A	MIN. 0.806" SEG.# 3-003-043
HPCIS	3-47B455-626	3-CHM-2413-C-02	89E-02	F-A	F1.20C	VT-3		20000420	R-034	A	AS FOUND SETTING 4500#
HPCIS	3-47B455-635	3-CHM-2413-C-02	89E-02	F-A	F1.20	VT-3		20000427	R-068	A	WP-T41160-001
MSS	3MS1A-13T	3-003-RI-ISI-01	89E-02	R-A	R1.18	UT	FAC	20000423	R-062	A	MIN. 0.659" SEG.# 3-001-036
MSS	3MS1D-17E	3-003-RI-ISI-02	89E-02	R-A	R1.18	UT	FAC	20000423	R-063	A	MIN. 1.055" SEG.# 3-001-039
MSS	3MS2B-6T	3-003-RI-ISI-02	89E-02	R-A	R1.18	UT	FAC	20000423	R-064	A	MIN. 1.002" SEG.# 3-001-037
MSS	HPAS-3-H-02	ISI-0355-C-02	89E-02	F-A	F1.20C	VT-3		20000420	R-035	A	ACCEPT AS IS
MSS	HPAS-3-H-07	ISI-0355-C-02	89E-02	F-A	F1.20C	VT-3		20000421	R-037	A	ACCEPT AS IS
MSS	PCV1-3-018-PBC	3-ISI-0313-B-01	P09-02	B-G-2	B7.50	VT-1		20000404	R-031	A	24 NUTS plus 1 spare, NEW

EXAM REQUIREMENTS
89E-02 B01-02
B02-02 P07-02
S01-02 V01-02

OWNER: TENNESSEE VALLEY AUTHORITY
NUCLEAR POWER GROUP
1101 MARKET STREET
CHATTANOOGA, TENNESSEE 37402

PLANT: BROWNS FERRY NUCLEAR PLANT
P.O. BOX 2000
DECATUR, ALABAMA 35609-2000

CERTIFICATION OF AUTHORIZATION: NOT REQUIRED
NATIONAL BOARD NUMBER FOR UNIT: NOT REQUIRED

UNIT: THREE CYCLE: 9 COMMERCIAL SERVICE DATE: MARCH 1, 1977

System	Component Number	ISO Drawing	Exam Requirement	Category	Item Number	Exam Scheduled	Calibration Standard	Exam Date	Exam Report	Exam Results	Comments
MSS	PCV1-3-023-PBC	ISI-0313-B-01	P09-02	B-G-2	B7.50	VT-1		20000404	R-032	A	24 NUTS plus 1 spare, NEW
MSS	PCV1-3-030-PBC	ISI-0313-B-01	P09-02	B-G-2	B7.50	VT-1		20000404	R-030	A	12 STUDS, 24 NUTS, NEW
MSS	PCV1-3-030-PBC	ISI-0313-B-01	P09-02	B-G-2	B7.70	VT-1		19991021	R-023	A	12 STUDS, 24 NUTS,Item # 83, 107, 115
MSS	PCV1-3-041-PBC	ISI-0313-B-01	P09-02	B-G-2	B7.50	VT-1		20000404	R-029	A	12 STUDS, 24 NUTS, NEW
MSS	PCV1-3-041-VBC	ISI-0313-B-01	P09-02	B-G-2	B7.70	VT-1		19991101	R-025	A	VALVE S/N 1031; 12 SPLINE NUTS
MSS	PCV1-3-179-PBC	3-ISI-0313-B-01	P09-02	B-G-2	B7.50	VT-1		20000404	R-033	A	24 NUTS plus 1 spare, NEW
RCICS	3-47B456-097	CHM-2412-C-01	P09-02	F-A	F1.20	VT-3		19990506	R-012	A	3-SNUB-071-5010
RCICS	3-47B456-097	CHM-2412-C-01	P09-02	F-A	F1.20	VT-3		19990507	R-021	A	3-SNUB-071-5011
RCICS	RCIC-3-R-05	BP-1806-4	V01-02	F-A	F1.20	VT-3		19990506	R-014	A	3-SNUB-071-5013
RCICS	RCIC-3-R-05	BP-1806-4	V01-02	F-A	F1.20	VT-3		19990506	R-017	A	3-SNUB-071-5012
RCICS	RCIC-3-R-07	BP-1808-5	V01-02	F-A	F1.20	VT-3		19990507	R-020	A	3-SNUB-071-5014
RCICS	RCIC-3-R-07	BP-1808-5	V01-02	F-A	F1.20	VT-3		19990506	R-019	A	3-SNUB-071-5015
RECIR	GR-3-03(OL)	3-ISI-0328-C-01	B02-02	E	NU0313	UT	BF-83	20000422	R-048	A	
RECIR	GR-3-03(OL)	3-ISI-0328-C-01	89E-02	R-A	R1.16E	UT	BF-83	20000422	R-048	A	
RECIR	GR-3-27(OL)	3-ISI-0328-C-02	B02-02	E	NU0313	UT	BF-83	20000423	R-049	A	
RECIR	GR-3-27(OL)	3-ISI-0328-C-02	89E-02	R-A	R1.16E	UT	BF-83	20000423	R-049	A	
RECIR	GR-3-53(OL)	3-ISI-0328-C-01	B02-02	E	NU0313	UT	BF-83	20000422	R-047	A	
RECIR	GR-3-53(OL)	3-ISI-0328-C-01	89E-02	R-A	R1.16E	UT	BF-83	20000422	R-047	A	
RECIR	GR-3-54(OL)	3-ISI-0328-C-01	B02-02	E	NU0313	UT	BF-83	20000422	R-038	A	
RECIR	GR-3-54(OL)	3-ISI-0328-C-01	89E-02	R-A	R1.16E	UT	BF-83	20000422	R-038	A	
RECIR	GR-3-57(OL)	3-ISI-0328-C-01	B02-02	E	NU0313	UT	BF-83	20000422	R-039	A	
RECIR	GR-3-57(OL)	3-ISI-0328-C-01	89E-02	R-A	R1.16E	UT	BF-83	20000422	R-039	A	

EXAM REQUIREMENTS
89E-02 B01-02
B02-02 P07-02
S01-02 V01-02

OWNER: TENNESSEE VALLEY AUTHORITY
NUCLEAR POWER GROUP
1101 MARKET STREET
CHATTANOOGA, TENNESSEE 37402

PLANT: BROWNS FERRY NUCLEAR PLANT
P.O. BOX 2000
DECATUR, ALABAMA 35609-2000

CERTIFICATION OF AUTHORIZATION: NOT REQUIRED
NATIONAL BOARD NUMBER FOR UNIT: NOT REQUIRED

UNIT: THREE CYCLE: 9 COMMERCIAL SERVICE DATE: MARCH 1, 1977

System	Component Number	ISO Drawing	Exam Requirement	Category	Item Number	Exam Scheduled	Calibration Standard	Exam Date	Exam Report	Exam Results	Comments
RECIR	GR-3-59(OL)	3-ISI-0328-C-02	B02-02	E	NU0313	UT	BF-83	20000421	R-044	A	
RECIR	GR-3-59(OL)	3-ISI-0328-C-02	89E-02	R-A	R1.16E	UT	BF-83	20000421	R-044	A	
RECIR	GR-3-60(OL)	3-ISI-0328-C-02	B02-02	E	NU0313	UT	BF-83	20000421	R-040	A	
RECIR	GR-3-60(OL)	3-ISI-0328-C-02	89E-02	R-A	R1.16E	UT	BF-83	20000421	R-040	A	
RECIR	GR-3-63	3-ISI-0328-C-02	S01-02	E	0313	UT	SIZING	20000421	R-045	A	1st SUCCESSIVE EXAMINATION
RECIR	GR-3-64(OL)	3-ISI-0328-C-02	B02-02	E	NU0313	UT	BF-83	20000423	R-046	A	28-INCH OVERLAID
RECIR	GR-3-64(OL)	3-ISI-0328-C-02	89E-02	R-A	R1.16E	UT	BF-83	20000423	R-046	A	
RECIR	RWR-3-001-G012	3-ISI-0328-C-01	B02-02	A	NU0313	UT	BF-79	20000421	R-042	A	
RECIR	RWR-3-001-G012	3-ISI-0328-C-01	89E-02	R-A	R1.16A	UT	BF-79	20000421	R-042	A	
RECIR	RWR-3-001-G015	3-ISI-0328-C-01	B02-02	A	NU0313	UT	BF-79	20000422	R-043	A	
RECIR	RWR-3-001-G015	3-ISI-0328-C-01	89E-02	R-A	R1.16A	UT	BF-79	20000422	R-043	A	
RECIR	RWR-3-002-G018	3-ISI-0328-C-02	B02-02	A	NU0313	UT	BF-79	20000423	R-057	A	
RECIR	RWR-3-002-G018	3-ISI-0328-C-02	89E-02	R-A	R1.16A	UT	BF-79	20000423	R-057	A	
RECIR	RWR-3-002-G022	3-ISI-0328-C-02	B02-02	A	NU0313	UT	BF-79	20000422	R-056	A	
RECIR	RWR-3-002-G022	3-ISI-0328-C-02	89E-02	R-A	R1.16A	UT	BF-79	20000422	R-056	A	
RHRS	3-47B452-129	ISI-0395-C-12	P09-02	F-A	F1.20	VT-3		19990506	R-015	A	ADH-300-2040 & 2041
RHRS	3-47B452-130	ISI-0395-C-13	P09-02	F-A	F1.20	VT-3		19990506	R-013	A	3-SNUB-074-5056
RHRS	3-47B452-130	ISI-0395-C-13	P09-02	F-A	F1.20	VT-3		19990506	R-016	A	3-SNUB-074-5057
RHRS	DRHR-3-03B	3-ISI-0330-C-01	B02-02	G	NU0313	VT-2		20000502	R-70	A	
RHRS	DRHR-3-03B	3-ISI-0330-C-01	89E-02	R-A	R1.16G	VT-2		20000502	R-070	A	
RHRS	DRHR-3-13B	3-ISI-0330-C-01	B02-02	G	NU0313	VT-2		20000502	R-070	A	
RHRS	DRHR-3-13B	3-ISI-0330-C-01	89E-02	R-A	R1.16G	VT-2		20000502	R-070	A	

EXAM REQUIREMENTS
89E-02 B01-02
B02-02 P07-02
S01-02 V01-02

OWNER: TENNESSEE VALLEY AUTHORITY
NUCLEAR POWER GROUP
1101 MARKET STREET
CHATTANOOGA, TENNESSEE 37402

PLANT: BROWNS FERRY NUCLEAR PLANT
P.O. BOX 2000
DECATUR, ALABAMA 35609-2000

UNIT: THREE CYCLE: 9 COMMERCIAL SERVICE DATE: MARCH 1, 1977

CERTIFICATION OF AUTHORIZATION: NOT REQUIRED
NATIONAL BOARD NUMBER FOR UNIT: NOT REQUIRED

System	Component Number	ISO Drawing	Exam Requirement	Category	Item Number	Exam Scheduled	Calibration Standard	Exam Date	Exam Report	Exam Results	Comments
RHRS	DSRHR-3-11(OL)	3-ISI-0330-C-01	B02-02	E	NU0313	UT	BF-48	20000420	R-041	A	
RHRS	DSRHR-3-11(OL)	3-ISI-0330-C-01	89E-02	R-A	R1.16E	UT	BF-48	20000420	R-041	A	
RHRS	FCV74-67	3-ISI-0330-C-01	89E-02	B-M-2	B12.50	VT-3		20000420	R-036	P	WO#99-007688-002
RPV	3-SI-3.3.1.A		89E-02	B-P	B15.10	VT-2		20000503	R-070	A	
RPV	3-SI-3.3.1.A		89E-02	B-P	B15.50	VT-2		20000503	R-070	A	
RPV	3-SI-3.3.1.A		89E-02	B-P	B15.60	VT-2		20000503	R-070	A	
RPV	3-SI-3.3.1.A		89E-02	B-P	B15.70	VT-2		20000503	R-070	A	
RPV	3-SI-3.3.10		89E-02	C-H	C7.30	VT-2		19990324	R-011	A	
RPV	3-SI-3.3.13		89E-02	D-B	D2.10	VT-2		19990125	R-006	A	
RPV	3-SI-3.3.14.A		89E-02	D-B	D2.10	VT-2		19990121	R-008	A	CB CHILLER 3A CONDENSER RETURN HD
RPV	3-SI-3.3.14.A		89E-02	D-B	D2.10	VT-2		19990208	R-007	A	
RPV	3-SI-3.3.14.B		89E-02	D-B	D2.10	VT-2		19990222	R-009	A	
RPV	3-SI-3.3.4		89E-02	C-H	C7.30	VT-2		19990315	R-010	A	
RPV	3-SI-3.3.6		89E-02	C-H	C7.30	VT-2		19990319	R-022	A	
RPV	3-SI-3.3.6		89E-02	C-H	C7.30	VT-2		19990108	R-004	A	
RPV	3-SI-3.3.8.A		89E-02	C-H	C7.30	VT-2		19981113	R-002	A	
RPV	3-SI-3.3.8.C		89E-02	C-H	C7.30	VT-2		19981030	R-003	A	
RPV	3-SI-3.3.8.C		89E-02	C-H	C7.30	VT-2		19991029	R-024	A	
RPV	3-SI-3.3.9		89E-02	C-H	C7.30	VT-2		19990114	R-005	A	
RPV	3-SI-3.3.9		89E-02	C-H	C7.30	VT-2		19991104	R-026	A	
RPV	3-SI-3.3.9		89E-02	C-H	C7.30	VT-2		20000225	R-028	A	WO#99-010859-001
RPV	3-SI-3.3.9		89E-02	C-H	C7.70	VT-2		19991217	R-027	A	WO#99-007818-000

EXAM REQUIREMENTS
89E-02 B01-02
B02-02 P07-02
S01-02 V01-02

OWNER: TENNESSEE VALLEY AUTHORITY
NUCLEAR POWER GROUP
1101 MARKET STREET
CHATTANOOGA, TENNESSEE 37402

PLANT: BROWNS FERRY NUCLEAR PLANT
P.O. BOX 2000
DECATUR, ALABAMA 35609-2000

CERTIFICATION OF AUTHORIZATION: NOT REQUIRED

UNIT: THREE CYCLE: 9 COMMERCIAL SERVICE DATE: MARCH 1, 1977

NATIONAL BOARD NUMBER FOR UNIT: NOT REQUIRED

System	Component Number	ISO Drawing	Exam Requirement	Category	Item Number	Exam Scheduled	Calibration Standard	Exam Date	Exam Report	Exam Results	Comments
RPV	INTERIOR	3-ISI-0220-C-02	89E-02	B-N-1	B13.10	VT		20000423	R-069	A	
SLCS	3-47B462-027	3-47B462-27	V01-02	F-A	F1.20	VT		19990506	R-018	A	3-SNUB-063-5001

OWNER: TENNESSEE VALLEY AUTHORITY OFFICE OF NUCLEAR POWER 1101 MARKET STREET CHATTANOOGA, TENNESSEE 37402	PLANT: BROWNS FERRY NUCLEAR PLANT PO BOX 2000 DECATUR, ALABAMA 35609-2000

UNIT: THREE CERTIFICATE OF AUTHORIZATION: NOT REQUIRED.

COMMERCIAL SERVICE DATE: MARCH 1, 1977

NATIONAL BOARD NUMBER FOR UNIT: NOT REQUIRED.

BFN UNIT 3 CYCLE 9 SCAN PLAN (ALL EXAMS)

LEGEND FOR EXAMINATION PLAN

EXREQ	DEFINITION
89E-02	ASME SECTION XI, 1989 EDITION, SECOND INTERVAL
S01-02	SUCCESSIVE EXAMINATION PERFORMED ON COMPONENTS DUE TO PREVIOUS FINDINGS
P09-02	BASELINE OR PRESERVICE EXAMINATIONS
B01-02	NOZZLE EXAMINATIONS PER NUREG-0619
B02-02	AUGMENTED EXAMINATIONS PER NUREG-0313
V01-02	VOLUNTARY EXAMINATIONS, NO CODE CREDIT

EXAMINATION RESULTS: A = ACCEPTED
P = PASS

OWNER: TENNESSEE VALLEY AUTHORITY OFFICE OF NUCLEAR POWER 1101 MARKET STREET CHATTANOOGA, TENNESSEE 37402	PLANT: BROWNS FERRY NUCLEAR PLANT PO BOX 2000 DECATUR, ALABAMA 35609-2000

UNIT: THREE CERTIFICATE OF AUTHORIZATION: NOT REQUIRED.

COMMERCIAL SERVICE DATE: MARCH 1, 1977

NATIONAL BOARD NUMBER FOR UNIT: NOT REQUIRED.

BFN UNIT 3 CYCLE 9 SCAN PLAN (ALL EXAMS)

LEGEND FOR EXAMINATION PLAN

EXREQ	DEFINITION
89E-02	ASME SECTION XI, 1989 EDITION, SECOND INTERVAL
S01-02	SUCCESSIVE EXAMINATION PERFORMED ON COMPONENTS DUE TO PREVIOUS FINDINGS
P09-02	BASELINE OR PRESERVICE EXAMINATIONS
B01-02	NOZZLE EXAMINATIONS PER NUREG-0619
B02-02	AUGMENTED EXAMINATIONS PER NUREG-0313

EXAMINATION RESULTS: A = ACCEPTED
P = PASS

ENCLOSURE 2

TENNESSEE VALLEY AUTHORITY
BROWNS FERRY NUCLEAR PLANT (BFN)
UNIT 3
AMERICAN SOCIETY OF MECHANICAL ENGINEERS (ASME),
SECTION XI, REPAIR AND REPLACEMENTS PROGRAM

SUMMARY REPORT (NIS-2) FOR CYCLE 9 OPERATION

(SEE ATTACHED)

BROWNS FERRY

NUCLEAR PLANT

UNIT 3 CYCLE 9

ASME SECTION XI

NIS-2 DATA REPORT

OWNER'S REPORT FOR REPAIRS OR REPLACEMENTS

APPENDIX I _____ **Summary of Repair and Replacement Activities**

APPENDIX II _____ **Form NIS-2 Owner's Report For Repairs or Replacements**

Owner: TENNESSEE VALLEY AUTHORITY 1101 Market Street Chattanooga, TN 37402-2801	Plant: Browns Ferry Nuclear Plant P. O. Box 2000 Decatur, AL 35609-2000
Unit: Three	Certificate of Authorization: Not Required
Commercial Service Date: March 1, 1977	
National Board Number for Unit: Not Required	

APPENDIX I

SUMMARY OF REPAIR AND REPLACEMENT ACTIVITIES

Owner: TENNESSEE VALLEY AUTHORITY 1101 Market Street Chattanooga, TN 37402-2801	Plant: Browns Ferry Nuclear Plant P. O. Box 2000 Decatur, AL 35609-2000
Unit: Three	Certificate of Authorization: Not Required
Commercial Service Date: March 1, 1977	
National Board Number for Unit: Not Required	

WID	SYS	ORG	CLASS	ACTIVITY
99-003436-019	71	MAINT	2	REPLACEMENT
99-003436-020			2	
99-003436-021			2	
99-003436-022			2	
99-003436-025			2	
99-003436-026			2	
99-003436-023	74	MAINT	2	REPLACEMENT
99-003436-024			2	
99-003436-029			2	
99-003436-030			2	
99-003436-033	63	MAINT	2	REPLACEMENT
50099A	63	TVA	1	REPLACEMENT
99-010911-000				
98-013558-000	1	MAINT	1	REPLACEMENT
98-013625-000			1	
99-006555-000			1	
99-006556-000			1	
99-006987-000	1	MAINT	1	REPLACEMENT
99-006988-000			1	
99-006989-000			1	
99-008267-000	1	MAINT	1	REPLACEMENT
00-003937-000			1	
00-004010-000			1	
00-004023-000			1	
00-004024-000			1	
99-008142-000	3	MAINT	1	REPLACEMENT
99-008216-000			1	
99-008262-000			1	
99-008263-000			1	
99-008265-000			1	
99-008266-000			1	
99-008222-000	69	MAINT	1	REPLACEMENT

Owner: TENNESSEE VALLEY AUTHORITY
1101 Market Street
Chattanooga, TN 37402-2801

Plant: Browns Ferry Nuclear Plant
P. O. Box 2000
Decatur, AL 35609-2000

Unit: Three

Certificate of Authorization: Not Required

Commercial Service Date: March 1, 1977

National Board Number for Unit: Not Required

WID	SYS	ORG	CLASS	ACTIVITY
99-003436-027 99-003436-028 99-008048-000	71	MAINT	2 2 2	REPLACEMENT
99-008218-000 99-008261-000 00-003932-000	74	MAINT	2 2 1	REPLACEMENT
00-000580-000	74	MAINT	2	REPLACEMENT
99-008042-000 99-008047-000 99-008259-000	75	MAINT	2 2 2	REPLACEMENT
T40079A 98-000036-000	74	TVA	1	REPLACEMENT
50097A 99-011842-000	75	TVA	2	REPLACEMENT
T39254A 99-012889-000	71	TVA	2	REPLACEMENT
T40713A 99-012995-000	71	TVA	1	REPLACEMENT
T41019A 99-013762-000	1	TVA	2	REPLACEMENT
T41160A	73	TVA	2	REPAIR

Owner: TENNESSEE VALLEY AUTHORITY 1101 Market Street Chattanooga, TN 37402-2801	Plant: Browns Ferry Nuclear Plant P. O. Box 2000 Decatur, AL 35609-2000
Unit: Three	Certificate of Authorization: Not Required
Commercial Service Date: March 1, 1977	
National Board Number for Unit: Not Required	

LEGEND

WID - Work Implementing Document
Example: A99999A or 50000A refers to a Design Change Notice
99-999999-999 refers to a Work Order

SYS- System

1 - Main Steam
3 - Reactor Feedwater
8 - Turbine Drains
10 - Reactor Drains, Vents and Blowdown
12 - Auxiliary Boiler
63 - Standby Liquid Control
68 - Reactor Water Recirculation
69 - Reactor Water Cleanup
71 - Reactor Core Isolation Cooling
73 - High Pressure Coolant Injection
74 - Residual Heat Removal
75 - Core Spray
85 - Control Rod Drive
92 - Neutron Monitoring

ORG - Organization which performed the WID
MAINT - TVA's Maintenance Organization
GE - General Electric Company
TVA - Work performed by Stone and Webster Engineering Corporation utilizing TVA's Quality Assurance Program and procedures

CLASS - Refers to ASME Code Class 1 or 2

ACTIVITY - Classifies work activity as being repair or replacement as denoted on NIS-2 Form

Owner: TENNESSEE VALLEY AUTHORITY 1101 Market Street Chattanooga, TN 37402-2801	Plant: Browns Ferry Nuclear Plant P. O. Box 2000 Decatur, AL 35609-2000
Unit: Three	Certificate of Authorization: Not Required
Commercial Service Date: March 1, 1977	
National Board Number for Unit: Not Required	

APPENDIX II

FORM NIS-2 OWNER'S REPORT FOR REPAIRS OR REPLACEMENTS

FORM NIS-2 OWNER'S REPORT FOR REPAIRS OR REPLACEMENTS
As Required by the Provisions of the ASME Code Section XI

1. Owner Tennessee Valley Authority (TVA) (Name)
   1101 Market Street
   Chattanooga, TN 37402-2801 (Address)

   Date July 15.1999

   Sheet 1 of 2

2. Plant Browns Ferry Nuclear Plant (BFN) (Name)
   P. O. Box 2000, Decatur, AL 35609-2000 (Address)

   Unit 3

   Work Orders (WO) 99-003436-019, 99-003436-020, 99-003436-021, 99-003436-022, 99-003436-025, and 99-003436-026
   (Repair Organization P.O. No., Job No., etc.)

3. Work Performed by TVA-BFN (Name)
   P. O. Box 2000, Decatur, AL 35609-2000 (Address)

   Type Code Symbol Stamp N/A
   Authorization No. N/A
   Expiration Date N/A

4. Identification of System System 071, Reactor Core Isolation Cooling (RCIC) System

5. (a) Applicable Construction Code USAS B31.1.0 19 67 * Edition, N/A Addenda, N/A Code Case

   (b) Applicable Edition of Section XI Utilized for Repairs or Replacements 19 89

6. Identification of Components Repaired or Replaced and Replacement Components

Name of Component	Name of Manufacturer	Manufacturer Serial No.	National Board No.	Other Identification	Year Built	Repaired, Replaced, or Replacement	ASME Code Stamped (Yes or No)
Support (Snubber) 3-47B456-97	Bergen-Paterson	TVA Serial No. M0025	N/A	3-SNUB-071-5010	N/A	Replaced	No
Support (Snubber) 3-47B456-97	Anchor/Darling	ADH-300-2042	N/A	3-SNUB-071-5010	N/A	Replacement	No
Support (Snubber) 3-47B456-97	Bergen-Paterson	TVA Serial No. M0033	N/A	3-SNUB-071-5011	N/A	Replaced	No
Support (Snubber) 3-47B456-97	Bergen-Paterson	TVA Serial No. M004	N/A	3-SNUB-071-5011	N/A	Replacement	No
Component listing continued on Sheet 2							

7. Description of Work Replaced snubbers with like-for-like; these snubbers are ASME Code Class 2 equivalent components.

8. Tests Conducted: Hydrostatic ☐ Pneumatic ☐ Nominal Operating Pressure ☐ ** See Remarks

   Other ☒** Pressure N/A psi Test Temp. N/A °F

NOTE: Supplemental Sheets in form of lists, sketches, or drawings may be used, provided (1) size is 8½ in. X 11 in., (2) information in items 1 through 6 on this report is included on each sheet, and (3) each sheet is numbered and the number of sheets is recorded at the top of this form.

*as amended by additional quality assurance requirements found in Contract 68C37-91602 and Design Criteria BFN-50-7071 and BFN-50-C-7105.

FORM NIS-2 (Back)

9. Remarks WO 99-003436-019 (3-SNUB-071-5010)

Applicable Manufacturer's Data Reports to be attached

The original snubber (TVA Serial No. M0025) was removed and stored in the snubber room as a spare.

The newly installed snubber (Serial No. ADH-300-2042) was purchased under contract P-99N2D-252831-000.

The new snubber (Serial No. ADH-300-2042) was functionally tested by the manufacturer and found acceptable, prior to installation at 3-SNUB-071-5010.

WO WO 99-003436-020 (3-SNUB-071-5011)

The original snubber (TVA Serial No. M0033) was removed and stored in the snubber room as a spare.

The newly installed snubber (TVA Serial No. M004) was previously located in Unit 3 as Reactor Core Isolation Cooling RCIC R7 Lower UNID 3-SNUB-071-5015. The newly installed snubber (TVA Serial No.M004) was functionally tested per 2-SI-4.6.H-2B, Functional Testing of Bergen-Paterson Hydraulic Snubbers, prior to installation at 3-SNUB-071-5011.

CERTIFICATE OF COMPLIANCE

We certify that the statements made in the report are correct and this replacement (repair or replacement) conforms to the rules of the ASME Code Section XI.

Type Code Symbol Stamp N/A

Certificate of Authorization No. N/A Expiration Date N/A

Signed [signature], System Engineer (Owner or Owner's Designee, Title) Date 7-21, 1999

CERTIFICATE OF INSERVICE INSPECTION

I, the undersigned, holding a valid commission issued by the National Board of Boiler and Pressure Vessel Inspectors and the State or Province of TENNESSEE and employed by HSBI & I of HARTFORD, CT have inspected the components described in this Owner's Report during the period 5-5-99 to 5-7-99, and state that to the best of my knowledge and belief, the Owner has performed examinations and taken corrective measures described in this Owner's Report in accordance with the requirements of the ASME Code, Section XI.

By signing this certificate neither the Inspector nor his employer makes any warranty, expressed or implied, concerning the examinations and corrective measures described in this Owner's Report. Furthermore, neither the Inspector nor his employer shall be liable in any manner for any personal injury or property damage or a loss of any kind arising from or connected with this inspection.

[signature] (Inspector's Signature) Commissions TN3135 IB SNA (National Board, State, Province, and Endorsements)

Date July 29 19 99

FORM NIS-2 OWNER'S REPORT FOR REPAIRS OR REPLACEMENTS
SUPPLEMENTAL SHEET

1. Owner Tennessee Valley Authority (TVA) (Name)
1101 Market Street
Chattanooga, TN 37402-2801 (Address)

Date July 15, 1999

Sheet 2 of 2

2. Plant Browns Ferry Nuclear Plant (BFN) (Name)
P. O. Box 2000, Decatur, AL 35609-2000 (Address)

Unit 3

Work Orders (WO) 99-003436-019, 99-003436-020, 99-003436-021, 99-003436-022, 99-003436-025, and 99-003436-026 (Repair Organization P.O. No., Job No., etc.)

3. Work Performed by TVA-BFN (Name)
P. O. Box 2000, Decatur, AL 35609-2000 (Address)

Type Code Symbol Stamp N/A

Authorization No. N/A

Expiration Date N/A

4. Identification of System System 071, Reactor Core Isolation Cooling (RCIC) System

5. (a) Applicable Construction Code USAS B31.1.0 19 67 * Edition, N/A Addenda, N/A Code Case
(b) Applicable Edition of Section XI Utilized for Repairs or Replacements 19 89

6. Identification of Components Repaired or Replaced and Replacement Components

Name of Component	Name of Manufacturer	Manufacturer Serial No.	National Board No.	Other Identification	Year Built	Repaired, Replaced, or Replacement	ASME Code Stamped (Yes or No)
Support (Snubber) RCIC R5 EAST	Bergen-Paterson	TVA Serial No. M0098	N/A	3-SNUB-071-5012	N/A	Replaced	No
Support (Snubber) RCIC R5 EAST	Anchor/Darling	ADH-300-2043	N/A	3-SNUB-071-5012	N/A	Replacement	No
Support (Snubber) RCIC R5 SOUTH	Bergen-Paterson	TVA Serial No. M0209	N/A	3-SNUB-071-5013	N/A	Replaced	No
Support (Snubber) RCIC R5 SOUTH	Bergen-Paterson	TVA Serial No. M0235	N/A	3-SNUB-071-5013	N/A	Replacement	No
Support (Snubber) RCIC R 7 UPPER	Bergen-Paterson	TVA Serial No. M0075	N/A	3-SNUB-071-5014	N/A	Replaced	No
Support (Snubber) RCIC R 7 UPPER	Bergen-Paterson	TVA Serial No. M0209	N/A	3-SNUB-071-5014	N/A	Replacement	No
Support (Snubber) RCIC R 7 LOWER	Bergen-Paterson	TVA Serial No. M004	N/A	3-SNUB-071-5015	N/A	Replaced	No
Support (Snubber) RCIC R 7 LOWER	Bergen-Paterson	TVA Serial No. M0090	N/A	3-SNUB-071-5015	N/A	Replacement	No

FORM NIS-2, SUPPLEMENTAL SHEET (Back)

9. Remarks WO 99-003436-021 (3-SNUB-071-5012)

Applicable Manufacturer's Data Reports to be attached

The original snubber (TVA Serial No. M0098) was removed and stored in the snubber room as a spare.

The newly installed snubber (Serial No. ADH-300-2043) was purchased under contract P-99N2D-252831-000.

The new snubber (Serial No. ADH-300-2043) was functionally tested by the manufacturer and found acceptable, prior to installation at 3-SNUB-071-5012.

WO 99-003436-022 (3-SNUB-071-5013)

The original snubber (TVA Serial No. M0209) was removed and stored in the snubber room as a spare.

The newly installed snubber (TVA Serial No. M0235) was previously located in Unit 2 as High Pressure Coolant Injection 2-47B455R0016 UNID 2-SNUB-073-5002 and was removed during the Unit 2 Cycle 5 outage in accordance with MMI-45. The newly installed snubber (TVA Serial No.M0235) was functionally tested per 2-SI-4.6.H-2B, Functional Testing of Bergen-Paterson Hydraulic Snubbers, prior to installation at 3-SNUB-071-5013.

WO 99-003436-025 (3-SNUB-071-5014)

The original snubber (TVA Serial No. M0075) was removed and stored in the snubber room as a spare.

The new snubber (TVA Serial No. M0209) was previously located in Unit 3 as Reactor Core Isolation Cooling R5 South, UNID 3-SNUB-071-5013 and was removed in accordance with MPI-0-000-SNB004. The new snubber (TVA Serial No.M0209) was rebuilt per MPI-0-000-SNB002, Hydraulic Shock and Sway Arrestor Bergen-Paterson Unit Disassembly and Reassembly, and functionally tested per 3-SI-4.6.H-2B, Functional Testing of Bergen-Paterson Hydraulic Snubbers, prior to installation at 3-SNUB-071-5014.

WO 99-003436-026 (3-SNUB-071-5015)

The original snubber (TVA Serial No. M004) was removed and stored in the snubber room as a spare.

The new snubber (TVA Serial No. M0090) was previously located in Unit 2 as Standby Liquid Control 2-47B462S0025, UNID 2-SNUB-063-5001 and was removed during the Unit 2 Cycle 6 outage in accordance with MMI-45. The new snubber (TVA Serial No.M0090) was functionally tested per 3-SI-4.6.H-2B, Functional Testing of Bergen-Paterson Hydraulic Snubbers, prior to installation at 3-SNUB-071-5015.

FORM NIS-2 OWNER'S REPORT FOR REPAIRS OR REPLACEMENTS
As Required by the Provisions of the ASME Code Section XI

1. Owner Tennessee Valley Authority (TVA) (Name)
1101 Market Street
Chattanooga, TN 37402-2801 (Address)

Date July 15,1999

Sheet 1 of 1

2. Plant Browns Ferry Nuclear Plant (BFN) (Name)
P. O. Box 2000, Decatur, AL 35609-2000 (Address)

Unit 3

Work Orders (WO) 99-003436-023, 99-003436-024, 99-003436-029 and 99-003436-030
Repair Organization P.O. No., Job No., etc.

3. Work TVA-BFN (Name)
P. O. Box 2000, Decatur, AL 35609-2000 (Address)

Type Code Symbol Stamp N/A

Authorization No. N/A

Expiration Date N/A

4. Identification of System System 074, Residual Heat Removal System

5. (a) Applicable Construction Code USAS B31.1.0 19 67* Edition, N/A Addenda, N/A Code Case

(b) Applicable Edition of Section XI Utilized for Repairs or Replacements 19 89

6. Identification of Components Repaired or Replaced and Replacement Components

SCW 8/13/99 ~~108~~ 129 SCW 8/13/99 ~~108~~ 129 SCW 8/13/99

Name of Component	Name of Manufacturer	Manufacturer Serial No.	National Board No.	Other Identification	Year Built	Repaired, Replaced, or Replacement	ASME Code Stamped (Yes or No)
Support (Snubber) 3-47B452-~~108~~ 129	Bergen-Paterson	TVA Serial No. M0418	N/A	3-SNUB-074-5040	N/A	Replaced	No
Support (Snubber) 3-47B452-~~108~~ 129	Anchor/Darling	ADH-300-2040	N/A	3-SNUB-074-5040	N/A	Replacement	No
Support (Snubber) 3-47B452-129	Bergen-Paterson	TVA Serial No. M0391	N/A	3-SNUB-074-5039	N/A	Replaced	No
Support (Snubber) 3-47B452-129	Anchor/Darling	ADH-300-2041	N/A	3-SNUB-074-5039	N/A	Replacement	No
Support (Snubber) 3-47B452-130	Bergen-Paterson	TVA Serial No. M0205	N/A	3-SNUB-074-5056	N/A	Replaced	No
Support (Snubber) 3-47B452-130	Bergen-Paterson	TVA Serial No. M0071	N/A	3-SNUB-074-5056	N/A	Replacement	No
Support (Snubber) 3-47B452-130	Bergen-Paterson	TVA Serial No. M0408	N/A	3-SNUB-074-5057	N/A	Replaced	No
Support (Snubber) 3-47B452-130	Bergen-Paterson	TVA Serial No. M0286	N/A	3-SNUB-074-5057	N/A	Replacement	No

7. Description of Work Replaced the referenced snubbers with either new or rebuilt, like-for-like snubbers.

8. Tests Conducted: Hydrostatic ☐ Pneumatic ☐ Nominal Operating Pressure ☐ ** See Remarks

Other ☒** Pressure N/A psi Test Temp. N/A °F

NOTE: Supplemental Sheets in form of lists, sketches, or drawings may be used, provided (1) size is 8½ in. X 11 in., (2) information in items 1 through 6 on this report is included on each sheet, and (3) each sheet is numbered and the number of sheets is recorded at the top of this form.

* as amended by additional quality assurances requirements found in contract 68C37-91602, BFN-50-7074 and BFN-50-C-7105

FORM NIS-2 (Back)

9. Remarks WO 99-003436-023 (3-SNUB-074-5040)

Applicable Manufacturer's Data Reports to be attached

The original snubber (TVA Serial No. M0418) was removed and stored in the snubber room as a spare.

The newly installed snubber (Serial No. ADH-300-2040) was purchased under contract P-99N2D-252831-000.

The new snubber (Serial No. ADH-300-2040) was functionally tested by the manufacturer and found acceptable, prior to installation at 3-SNUB-074-5040.

WO 99-003436-024 (3-SNUB-074-5039)
The original snubber (TVA Serial No. M0391) was removed and stored in the snubber room as a spare.

The newly installed snubber (Serial No. ADH-300-2041) was purchased under contract P-99N2D-252831-000.

The new snubber (Serial No. ADH-300-2041) was functionally tested by the manufacturer and found acceptable, prior to installation at 3-SNUB-074-5039.

WO 99-003436-029 (3-SNUB-074-5056)
The original snubber (TVA Serial No. M0205) was removed and stored in the snubber room as a spare.

The newly installed snubber (TVA Serial No. M0071) was previously located in Unit 2 as High Pressure Coolant Injection R16 Lower UNID 2-SNUB-073-5002 and was removed during the Unit 2 Cycle 5 outage in accordance with MMI-45. The newly installed snubber (TVA Serial No.M0071) was functionally tested per 2-SI-4.6.H-2B, Functional Testing of Bergen-Paterson Hydraulic Snubbers, prior to installation at 3-SNUB-074-5056.

WO 99-003436-030 (3-SNUB-074-5057)
The original snubber (TVA Serial No. M0408) was removed and stored in the snubber room as a spare due to seal life expiration. The newly installed snubber (TVA Serial No. M0286) was previously located in Unit 2 as Residual Heat Removal R60E UNID 2-SNUB-074-5026 and was removed during the Unit 2 Cycle 5 outage in accordance with MMI-45. The newly installed snubber (TVA Serial No.M0286) was rebuilt per MPI-0-000-SNB002, Hydraulic Shock and Sway Arrestor Bergen-Paterson Unit Disassembly and Reassembly, and functionally tested per 2-SI-4.6.H-2B, Functional Testing of Bergen-Paterson Hydraulic Snubbers, prior to installation at 3-SNUB-074-5057.

CERTIFICATE OF COMPLIANCE

We certify that the statements made in the report are correct and this replacement (repair or replacement) conforms to the rules of the ASME Code Section XI.

Type Code Symbol Stamp N/A

Certificate of Authorization No. N/A Expiration Date N/A

Signed [signature], System Engineer (Owner or Owner's Designee, Title) Date 7-19, 19 99

CERTIFICATE OF INSERVICE INSPECTION

I, the undersigned, holding a valid commission issued by the National Board of Boiler and Pressure Vessel Inspectors and the State or Province of TENNESSEE and employed by HSB I&I of HARTFORD, CT have inspected the components described in this Owner's Report during the period 5-5-99 to 5-6-99, and state that to the best of my knowledge and belief, the Owner has performed examinations and taken corrective measures described in this Owner's Report in accordance with the requirements of the ASME Code, Section XI.

By signing this certificate neither the Inspector nor his employer makes any warranty, expressed or implied, concerning the examinations and corrective measures described in this Owner's Report. Furthermore, neither the Inspector nor his employer shall be liable in any manner for any personal injury or property damage or a loss of any kind arising from or connected with this inspection.

[signature] Commissions TN 3135 IBSNA

Inspector's Signature National Board, State, Province, and Endorsements

Date Aug 13 19 99

FORM NIS-2 OWNER'S REPORT FOR REPAIRS OR REPLACEMENTS
As Required by the Provisions of the ASME Code Section XI

1. Owner Tennessee Valley Authority (TVA) (Name)
   1101 Market Street
   Chattanooga, TN 37402-2801 (Address)

   Date July 15, 1999

   Sheet 1 of 1

2. Plant Browns Ferry Nuclear Plant (BFN)
   P. O. Box 2000, Decatur, AL 35609-2000 (Address)

   Unit 3

   Work Order 99-003436-033 (Repair Organization P.O. No., Job No., etc.)

3. Work Performed by TVA-BFN (Name)
   P. O. Box 2000, Decatur, AL 35609-2000 (Address)

   Type Code Symbol Stamp N/A
   Authorization No. N/A
   Expiration Date N/A

4. Identification of System System 063, Standby Liquid Control (SLC) System

5. (a) Applicable Construction Code USAS B31.1.0 19 67 * Edition, N/A Addenda, N/A Code Case

   (b) Applicable Edition of Section XI Utilized for Repairs or Replacements 19 89

6. Identification of Components Repaired or Replaced and Replacement Components

Name of Component	Name of Manufacturer	Manufacturer Serial No.	National Board No.	Other Identification	Year Built	Repaired, Replaced, or Replacement	ASME Code Stamped (Yes or No)
Support (Snubber) 3~~2~~-47B462~~80~~27	Bergen-Paterson	TVA Serial No. M0076	N/A	3~~2~~-SNUB-063-5001	N/A	Replaced	No
Support (Snubber) 3~~2~~-47B462~~80~~27	Bergen-Paterson	TVA Serial No. M0387	N/A	3~~2~~-SNUB-063-5001	N/A	Replacement	No

7. Description of Work Replaced snubber 3-SNUB-063-5021 with like-for-like; this snubber is an ASME Code Class 2 equivalent component.

8. Tests Conducted: Hydrostatic ☐ Pneumatic ☐ Nominal Operating Pressure ☐ ** See Remarks

   Other ☒** Pressure N/A psi Test Temp. N/A °F

NOTE: Supplemental Sheets in form of lists, sketches, or drawings may be used, provided (1) size is 8½ in. X 11 in., (2) information in items 1 through 6 on this report is included on each sheet, and (3) each sheet is numbered and the number of sheets is recorded at the top of this form.

*as amended by additional quality assurance requirements found in Contract 68C37-91602 and Design Criteria BFN-50-7063 and BFN-50-C-7105.

FORM NIS-2 (Back)

9. Remarks The original snubber (TVA Serial No. M0076) was removed and stored in the snubber room as a spare due to seal life expiration. The newly installed snubber (TVA Serial No. M0387) was previously located in Unit 2 as Residual Heat Removal R57W UNID 2-SNUB-074-5022 and was removed during the Unit 2 Cycle 5 outage in accordance with MMI-45. The newly installed snubber (TVA Serial No.M0387) was rebuilt per MPI-0-000-SNB002, Hydraulic Shock and Sway Arrestor Bergen-Paterson Unit Disassembly and Reassembly, and functionally tested per ~~2~~-SI-4.6.H-2B, Functional Testing of Bergen-Paterson Hydraulic Snubbers, prior to installation at ~~2~~-SNUB-063-5001.

Applicable Manufacturer's Data Reports to be attached

SCW 6/30/2000 3 SCW 6/30/2000 3 6/30/00 6/30/00

CERTIFICATE OF COMPLIANCE

We certify that the statements made in the report are correct and this Replacement (repair or replacement) conforms to the rules of the ASME Code Section XI.

Type Code Symbol Stamp N/A

Certificate of Authorization No. N/A Expiration Date N/A

Signed [signature], System Engineer (Owner or Owner's Designee, Title) Date 7-19, 19 99

CERTIFICATE OF INSERVICE INSPECTION

I, the undersigned, holding a valid commission issued by the National Board of Boiler and Pressure Vessel Inspectors and the State or Province of TENNESSEE and employed by HSBI&I of HARTFORD, CT. have inspected the components described in this Owner's Report during the period 5-5-99 to 5-6-99, and state that to the best of my knowledge and belief, the Owner has performed examinations and taken corrective measures described in this Owner's Report in accordance with the requirements of the ASME Code, Section XI.

By signing this certificate neither the Inspector nor his employer makes any warranty, expressed or implied, concerning the examinations and corrective measures described in this Owner's Report. Furthermore, neither the Inspector nor his employer shall be liable in any manner for any personal injury or property damage or a loss of any kind arising from or connected with this inspection.

[signature] (Inspector's Signature) Commissions TN 3135 IBSNA (National Board, State, Province, and Endorsements)

Date Aug. 13 19 99

FORM NIS-2 OWNER'S REPORT FOR REPAIRS OR REPLACEMENTS
As Required by the Provisions of the ASME Code Section XI

1. Owner Tennessee Valley Authority (TVA) (Name)
1101 Market Street
Chattanooga, TN 37402-2801 (Address)

Date June 21, 2000

Sheet 1 of 1

2. Plant Browns Ferry Nuclear Plant (BFN)
P. O. Box 2000, Decatur, AL 35609-2000 (Address)

Unit 3

Design Change Notice (DCN) 50099A and Work Order (WO) 99-010911-000 (Repair Organization P.O. No., Job No., etc.)

3. Work Performed by TVA-BFN (Name)
P. O. Box 2000, Decatur, AL 35609-2000 (Address)

Type Code Symbol Stamp N/A

Authorization No. N/A

Expiration Date N/A

4. Identification of System System 063, Standby Liquid Control System

5. (a) Applicable Construction Code USAS B31.1.0 19 67 * Edition, N/A Addenda, N/A Code Case

(b) Applicable Edition of Section XI Utilized for Repairs or Replacements 19 89

6. Identification of Components Repaired or Replaced and Replacement Components

Name of Component	Name of Manufacturer	Manufacturer Serial No.	National Board No.	Other Identification	Year Built	Repaired, Replaced, or Replacement	ASME Code Stamped (Yes or No)
Support (Snubber) 3-47B462-95	Bergen-Paterson	TVA Serial No. M0242	N/A	3 ~~2~~-SNUB-063-5002	N/A	Removed by DCN 50099A	No
Support (Snubber) Deleted	None	None	N/A	None	N/A	No replacement	No

7. Description of Work Deleted snubber 3-SNUB-063-5002.

8. Tests Conducted: Hydrostatic ☐ Pneumatic ☐ Nominal Operating Pressure ☐

Other ☐ Pressure N/A psi Test Temp. N/A °F

NOTE: Supplemental Sheets in form of lists, sketches, or drawings may be used, provided (1) size is 8½ in. X 11 in., (2) information in items 1 through 6 on this report is included on each sheet, and (3) each sheet is numbered and the number of sheets is recorded at the top of this form.

*as amended by additional quality assurance requirements found in Contract 68C37-91602 and Design Criteria BFN-50-7063 and BFN-50-C-7105.

WO # 99-010911-000
PAGE 9 CONT'D ON PAGE 10 ON BACK OF SHEET

FORM NIS-2 (Back)

9. Remarks Deleted and removed snubber 3-SNUB-063-5002 by DCN 50099A.
Applicable Manufacturer's Data Reports to be attached

CERTIFICATE OF COMPLIANCE

We certify that the statements made in the report are correct and this replacement (repair or replacement) conforms to the rules of the ASME Code Section XI.

Type Code Symbol Stamp N/A

Certificate of Authorization No. N/A Expiration Date N/A

Signed [signature], System Engineer (Owner or Owner's Designee, Title) Date 6-22, 20 00

CERTIFICATE OF INSERVICE INSPECTION

I, the undersigned, holding a valid commission issued by the National Board of Boiler and Pressure Vessel Inspectors and the State or Province of TENNESSEE and employed by HSBI&I of HARTFORD, CT have inspected the components described in this Owner's Report during the period 11/30/99 to 4/17/00, and state that to the best of my knowledge and belief, the Owner has performed examinations and taken corrective measures described in this Owner's Report in accordance with the requirements of the ASME Code, Section XI.

By signing this certificate neither the Inspector nor his employer makes any warranty, expressed or implied, concerning the examinations and corrective measures described in this Owner's Report. Furthermore, neither the Inspector nor his employer shall be liable in any manner for any personal injury or property damage or a loss of any kind arising from or connected with this inspection.

[signature] (Inspector's Signature) Commissions TN 3135 IB SNA (National Board, State, Province, and Endorsements)

Date June 22 20 00

WO# 99-010911-000

FORM NIS-2 OWNER'S REPORT FOR REPAIRS OR REPLACEMENTS
As Required by the Provisions of the ASME Code Section XI

1. Owner Tennessee Valley Authority (TVA) (Name)
1101 Market Street
Chattanooga, TN 37402-2801 (Address)

Date June 5, 2000

Sheet 1 of 1

2. Plant Browns Ferry Nuclear Plant (BFN) (Name)
P. O. Box 2000, Decatur, AL 35609-2000 (Address)

Unit 3

Work Orders (WO) 98-013558-000, 98-013625-000, 99-006555-000 and 99-006556-000
Repair Organization P.O. No., Job No., etc.

3. Work Performed by TVA-BFN (Name)
P. O. Box 2000, Decatur, AL 35609-2000 (Address)

Type Code Symbol Stamp N/A
Authorization No. N/A
Expiration Date N/A

4. Identification of System System 001, Main Steam System

5. (a) Applicable Construction Code ASME Section III, Article 9, 1965 and ASME Section III 19 68 Edition, Summer 1970 Addenda, N/A Code Case

(b) Applicable Edition of Section XI Utilized for Repairs or Replacements 19 89

6. Identification of Components Repaired or Replaced and Replacement Components

Name of Component	Name of Manufacturer	Manufacturer Serial No.	National Board No.	Other Identification	Year Built	Repaired, Replaced, or Replacement	ASME Code Stamped (Yes or No)
Main Steam Relief Valve	Target Rock Corp. 7567F-000-10	1065	N/A	3-PCV-001-0030	1968	Replaced	Yes
Main Steam Relief Valve	Target Rock Corp. 7567F-000-10	1016	N/A	3-PCV-001-0030	1968	Replacement	Yes
Main Steam Relief Valve	Target Rock Corp. 7567F-000-10	1085	N/A	3-PCV-001-0041	1968	Replaced	Yes
Main Steam Relief Valve	Target Rock Corp. 7567F-000-10	1031	N/A	3-PCV-001-0041	1968	Replacement	Yes

7. Description of Work Replaced Main Steam Relief valve main bodies. Replaced the inlet and outlet bolting.

8. Tests Conducted: Hydrostatic ☐ Pneumatic ☐ Nominal Operating Pressure ☒

Other ☐ Pressure N/A psi Test Temp. N/A °F

NOTE: Supplemental Sheets in form of lists, sketches, or drawings may be used, provided (1) size is 8½ in. X 11 in., (2) information in items 1 through 6 on this report is included on each sheet, and (3) each sheet is numbered and the number of sheets is recorded at the top of this form.

*as amended by additional quality assurance requirements found in GE P. O. 205AJ600, and Design Criteria BFN-50-7001 and BFN-50-C-7105.

FORM NIS-2 (Back)

9. Remarks The main valve bodies were replaced with rebuilt valve bodies (same manufacturer/model number) previously used at BFN.
Applicable Manufacturer's Data Reports to be attached
These valves are being replaced as part of the regularly scheduled valve inspections required by Tech Specs.

3-PCV-001-0030

WO 99-006556-000 removed the existing valve body (S/N 1065) from the 3-PCV-001-0030 location and replaced it with a with a rebuilt valve (S/N 1016) previously used in BFN Unit 2 (2-PCV-001-0004). The replacement valve was removed from Unit 2 by WO 98-013558-000 and rebuilt by WO 98-013558-001. Rebuild included replacement of three body bolts/studs and all body nuts were changed to spline nuts. Inlet and outlet bolting was replaced for ease of maintenance and ALARA considerations.

3-PCV-001-0041

WO 99-006555-000 removed the existing valve body (S/N 1085) from the 3-PCV-001-0041 location and replaced it with a with a rebuilt valve (S/N 1031) previously used in BFN Unit 2 (2-PCV-001-0023). The replacement valve was removed from Unit 2 by WO 98-013625-000 and rebuilt by WO 98-013625-001. Rebuild included replacement of all body nuts with spline nuts. Inlet and outlet bolting was replaced for ease of maintenance and ALARA considerations.

CERTIFICATE OF COMPLIANCE

We certify that the statements made in the report are correct and this replacement (repair or replacement) conforms to the rules of the ASME Code Section XI.

Type Code Symbol Stamp N/A

Certificate of Authorization No. N/A Expiration Date N/A

Signed [signature], System Engineer (Owner or Owner's Designee, Title) Date 6-16, 2000

CERTIFICATE OF INSERVICE INSPECTION

I, the undersigned, holding a valid commission issued by the National Board of Boiler and Pressure Vessel Inspectors and the State or Province of TENNESSEE and employed by HSB I&I of HARTFORD, CT have inspected the components described in this Owner's Report during the period 9/29/99 to 4/30/00, and state that to the best of my knowledge and belief, the Owner has performed examinations and taken corrective measures described in this Owner's Report in accordance with the requirements of the ASME Code, Section XI.

By signing this certificate neither the Inspector nor his employer makes any warranty, expressed or implied, concerning the examinations and corrective measures described in this Owner's Report. Furthermore, neither the Inspector nor his employer shall be liable in any manner for any personal injury or property damage or a loss of any kind arising from or connected with this inspection.

[signature] (Inspector's Signature) Commissions TN 3135 IB SNA (National Board, State, Province, and Endorsements)

Date June 20 2000 - per authorization by Al Ladd. -SCW 7/31/2000

FORM NIS-2 OWNER'S REPORT FOR REPAIRS OR REPLACEMENTS
As Required by the Provisions of the ASME Code Section XI

1. Owner Tennessee Valley Authority (TVA) (Name)
1101 Market Street
Chattanooga, TN 37402-2801 (Address)

Date June 5, 2000

Sheet 1 of 1

2. Plant Browns Ferry Nuclear Plant (BFN) (Name)
P. O. Box 2000, Decatur, AL 35609-2000 (Address)

Unit 3

Work Orders (WO) 99-006987-000, 99-006988-000 and 99-006989-000. (Repair Organization P.O. No., Job No., etc.)

3. Work Performed by TVA-BFN (Name)
P. O. Box 2000, Decatur, AL 35609-2000 (Address)

Type Code Symbol Stamp N/A

Authorization No. N/A

Expiration Date N/A

4. Identification of System System 001, Main Steam System

5. (a) Applicable Construction Code ASME Section III, Article 9, 1965 and ASME Section III 19 68 Edition, Summer 1970 Addenda, N/A Code Case

(b) Applicable Edition of Section XI Utilized for Repairs or Replacements 19 89

6. Identification of Components Repaired or Replaced and Replacement Components

Name of Component	Name of Manufacturer	Manufacturer Serial No.	National Board No.	Other Identification	Year Built	Repaired, Replaced, or Replacement	ASME Code Stamped (Yes or No)
Main Steam Relief Valve	Target Rock Corp. 7567F-000-10	1022 1057 1028	N/A	3-PCV-001-0018 3-PCV-001-0023 3-PCV-001-0179	1968	See below	Yes
These nuts are listed as pressure retaining parts of the relief valves							
Main Steam Relief Valve Inlet Flange Nuts	Cardinal Industrial Products	N/A	N/A	3-PCV-001-0018	N/A	Replaced	No
Main Steam Relief Valve Inlet Flange Nuts	Nova Machine Products	N/A	N/A	3-PCV-001-0018	N/A	Replacement	No
Main Steam Relief Valve Inlet Flange Nuts	Cardinal Industrial Products	N/A	N/A	3-PCV-001-0023	N/A	Replaced	No
Main Steam Relief Valve Inlet Flange Nuts	Nova Machine Products	N/A	N/A	3-PCV-001-0023	N/A	Replacement	No
Main Steam Relief Valve Inlet Flange Nuts	Cardinal Industrial Products	N/A	N/A	3-PCV-001-0179	N/A	Replaced	No
Main Steam Relief Valve Inlet Flange Nuts	Nova Machine Products	N/A	N/A	3-PCV-001-0179	N/A	Replacement	No

7. Description of Work Replaced the inlet flange nuts.

8. Tests Conducted: Hydrostatic ☐ Pneumatic ☐ Nominal Operating Pressure ☒

Other ☐ Pressure N/A psi Test Temp. N/A °F

NOTE: Supplemental Sheets in form of lists, sketches, or drawings may be used, provided (1) size is 8½ in. X 11 in., (2) information in items 1 through 6 on this report is included on each sheet, and (3) each sheet is numbered and the number of sheets is recorded at the top of this form.

*as amended by additional quality assurance requirements found in GE P. O. 205AJ600, and Design Criteria BFN-50-7001 and BFN-50-C-7105.

FORM NIS-2 (Back)

9. Remarks BFPER 99-004167-000 documented the installation of incorrect nuts on the MSRV inlet flanges for these three valves.
Applicable Manufacturer's Data Reports to be attached
The three WOs covered by this report removed the incorrect nuts from the subject valves and installed the correct nuts.

CERTIFICATE OF COMPLIANCE

We certify that the statements made in the report are correct and this replacement (repair or replacement) conforms to the rules of the ASME Code Section XI.

Type Code Symbol Stamp N/A

Certificate of Authorization No. N/A Expiration Date N/A

Signed [signature], System Engineer (Owner or Owner's Designee, Title) Date 6-16, 20 00

CERTIFICATE OF INSERVICE INSPECTION

I, the undersigned, holding a valid commission issued by the National Board of Boiler and Pressure Vessel Inspectors and the State or Province of TENNESSEE and employed by HSB I&I of HARTFORD, CT have inspected the components described in this Owner's Report during the period 4/20/00 to 4/30/00, and state that to the best of my knowledge and belief, the Owner has performed examinations and taken corrective measures described in this Owner's Report in accordance with the requirements of the ASME Code, Section XI.

By signing this certificate neither the Inspector nor his employer makes any warranty, expressed or implied, concerning the examinations and corrective measures described in this Owner's Report. Furthermore, neither the Inspector nor his employer shall be liable in any manner for any personal injury or property damage or a loss of any kind arising from or connected with this inspection.

[signature] (Inspector's Signature) Commissions TN3135 IBSNA (National Board, State, Province, and Endorsements)

Date June 19 20 00

FORM NIS-2 OWNER'S REPORT FOR REPAIRS OR REPLACEMENTS
As Required by the Provisions of the ASME Code Section XI

1. Owner Tennessee Valley Authority (TVA) (Name)
   1101 Market Street
   Chattanooga, TN 37402-2801 (Address)

   Date June 5, 2000

   Sheet 1 of 2

2. Plant Browns Ferry Nuclear Plant (BFN) (Name)
   P. O. Box 2000, Decatur, AL 35609-2000 (Address)

   Unit 3

   Work Orders (WO) 99-008267-0000, 00-003937-000, 00-004010-000, 00-004023-000, 00-004024-000
   (Repair Organization P.O. No., Job No., etc.)

3. Work Performed by TVA-BFN (Name)
   P. O. Box 2000, Decatur, AL 35609-2000 (Address)

   Type Code Symbol Stamp N/A
   Authorization No. N/A
   Expiration Date N/A

4. Identification of System System 001, Main Steam System

5. (a) Applicable Construction Code USAS B31.1.0 19 67 * Edition, N/A Addenda, N/A Code Case

   (b) Applicable Edition of Section XI Utilized for Repairs or Replacements 19 89

6. Identification of Components Repaired or Replaced and Replacement Components

Name of Component	Name of Manufacturer	Manufacturer Serial No.	National Board No.	Other Identification	Year Built	Repaired, Replaced, or Replacement	ASME Code Stamped (Yes or No)
Support (Snubber) 3-47B400-102	Bergen-Paterson	TVA Serial No. M0168	N/A	3-SNUB-001-5065	N/A	Replaced	No
Support (Snubber) 3-47B400-102	Anchor/Darling	ADH-3003-420	N/A	3-SNUB-001-5065	N/A	Replacement	No
Support (Snubber) 3-47B401-44-1	Pacific Scientific	TVA Serial No. 135	N/A	3-SNUB-001-5038	N/A	Replaced	No
Support (Snubber) 3-47B401-44-1	Pacific Scientific	6558	N/A	3-SNUB-001-5038	N/A	Replacement	No
Component listing continued on Sheet 2							

7. Description of Work Replaced snubbers with like-for-like replacements.

8. Tests Conducted: Hydrostatic ☐ Pneumatic ☐ Nominal Operating Pressure ☐ ** See Remarks

   Other ☒** Pressure N/A psi Test Temp. N/A °F

NOTE: Supplemental Sheets in form of lists, sketches, or drawings may be used, provided (1) size is 8½ in. X 11 in., (2) information in items 1 through 6 on this report is included on each sheet, and (3) each sheet is numbered and the number of sheets is recorded at the top of this form.

*as amended by additional quality assurance requirements found in Contract 68C37-91602 and Design Criteria BFN-50-7001 and BFN-50-C-7105.

FORM NIS-2 (E ack)

9. Remarks WO 99-008267-000 (3-SNUB-001-5065)

Applicable Manufacturer's Data Reports to be attached

The original snubber (TVA S/N M0168) was removed and stored in the snubber room as a spare due to seal life expiration. The replacement snubber (ADH-3003-420) had been removed from Unit 2 Recirc support 2-47B408S0082 (2-SNUB-068-5023) by WO 98-013828-000 and stored as a spare. The replacement snubber (ADH-3003-420) was rebuilt per MPI-0-000-SNB002 and functionally tested per MPI-0-000-SNB002. The rear base plate, rear main cylinder block and main cylinder tie-rods (4) from snubber S/N M0247 were installed in S/N ADH-3003-420 during rebuild. M0247 had been removed from Unit 2 RHR support 2-47B452S0157 (2-SNUB-074-5008) by WO 98-013616-000 and stored as a spare.

WO 00-003937-000 (3-SNUB-001-5038)

The original snubber (TVA S/N 135) passed the as-found test but exhibited high drag force and was scrapped. A new snubber (S/N 6558, same manufacturer and model number) was tested per 3-SI-4.6.H-2A and installed.

CERTIFICATE OF COMPLIANCE

We certify that the statements made in the report are correct and this replacement (repair or replacement) conforms to the rules of the ASME Code Section XI.

Type Code Symbol Stamp N/A

Certificate of Authorization No. N/A Expiration Date N/A

Signed [signature], System Engineer (Owner or Owner's Designee, Title) Date 6-20, 20 00

CERTIFICATE OF INSERVICE INSPECTION

I, the undersigned, holding a valid commission issued by the National Board of Boiler and Pressure Vessel Inspectors and the State or Province of TENNESSEE and employed by HSB I&I of HARTFORD, CT have inspected the components described in this Owner's Report during the period 4/21/00 to 4/30/00, and state that to the best of my knowledge and belief, the Owner has performed examinations and taken corrective measures described in this Owner's Report in accordance with the requirements of the ASME Code, Section XI.

By signing this certificate neither the Inspector nor his employer makes any warranty, expressed or implied, concerning the examinations and corrective measures described in this Owner's Report. Furthermore, neither the Inspector nor his employer shall be liable in any manner for any personal injury or property damage or a loss of any kind arising from or connected with this inspection.

[signature] Inspector's Signature Commissions TN 3135 I B SNA (National Board, State, Province, and Endorsements)

Date June 20 2000

FORM NIS-2 OWNER'S REPORT FOR REPAIRS OR REPLACEMENTS

SUPPLEMENTAL SHEET

1. Owner Tennessee Valley Authority (TVA) (Name)
   1101 Market Street
   Chattanooga, TN 37402-2801 (Address)
2. Plant Browns Ferry Nuclear Plant (BFN) (Name)
   P. O. Box 2000, Decatur, AL 35609-2000 (Address)
3. Work Performed by TVA-BFN (Name)
   P. O. Box 2000, Decatur, AL 35609-2000 (Address)

Date June 5, 2000

Sheet 2 of 2

Unit 3

Work Orders (WO) 99-008267-0000, 00-003937-000, 00-004010-000, 00-004023-000, 00-004024-000
(Repair Organization P.O. No., Job No., etc.)

Type Code Symbol Stamp N/A

Authorization No. N/A

Expiration Date N/A

4. Identification of System System 001, Main Steam System

5. (a) Applicable Construction Code USAS B31.1.0 19 67 * Edition, N/A Addenda, N/A Code Case
   (b) Applicable Edition of Section XI Utilized for Repairs or Replacements 19 89

6. Identification of Components Repaired or Replaced and Replacement Components

Name of Component	Name of Manufacturer	Manufacturer Serial No.	National Board No.	Other Identification	Year Built	Repaired, Replaced, or Replacement	ASME Code Stamped (Yes or No)
Support (Snubber) 3-47B400-89	Bergen-Paterson	TVA Serial No. M0288	N/A	3-SNUB-001-5058	N/A	Replaced	No
Support (Snubber) 3-47B400-89	Bergen-Paterson	TVA Serial No. M0065	N/A	3-SNUB-001-5058	N/A	Replacement	No
Support (Snubber) RSSA-3	Pacific Scientific	TVA Serial No. 121	N/A	3-SNUB-001-5003	N/A	Replaced	No
Support (Snubber) RSSA-3	Pacific Scientific	5537	N/A	3-SNUB-001-5003	N/A	Replacement	No
Support (Snubber) 3-47B401-33	Pacific Scientific	TVA Serial No. 129	N/A	3-SNUB-001-5027	N/A	Replaced	No
Support (Snubber) 3-47B401-33	Pacific Scientific	6508	N/A	3-SNUB-001-5027	N/A	Replacement	No
Support (Snubber) 3-47B401-33 bolting	unknown	N/A	N/A	3-SNUB-001-5027	N/A	Replaced	No
Support (Snubber) 3-47B401-33 bolting (stud)	Mid-South Nuclear	N/A	N/A	3-SNUB-001-5027	N/A	Replacement	No
Support (Snubber) 3-47B401-33 bolting (nut)	Nova Machine Products	N/A	N/A	3-SNUB-001-5027	N/A	Replacement	No

FORM NIS-2, SUPPLEMENTAL SHEET (Back)

9. Remarks WO 00-004010000 (3-SNUB-001-5058)

The original snubber (TVA S/N M0288) was removed and stored in the snubber room as a spare due to seal life expiration. The replacement snubber (TVA S/N M0065) was previously located in Unit 2 as Main Steam support 2-47B400S0110 (2-SNUB-001-5060) which had been replaced by 2-SI-4.6.H-2B under WO 98-011689-000 and kept as a spare. The replacement snubber (TVA S/N M0065) was rebuilt per MPI-0-000-SNB002 and functionally tested per 2-SI-4.6.H-2B. Rebuild included a new main cylinder.

WO 00-004023-000 (3-SNUB-001-5003)

The original snubber (TVA S/N 135) passed the as-found test but exhibited high drag force and was scrapped. A new snubber (S/N 5537, same manufacturer and model number) was tested per 3-SI-4.6.H-2A and installed.

WO 00-004024-000 (3-SNUB-001-5027)

The original snubber (TVA S/N 129) failed the as-found test and was scrapped. A new snubber (S/N 6508, same manufacturer and model number) was tested per 3-SI-4.6.H-2A and installed. During removal of the failed snubber the bolt connecting the pipe clamp to the snubber was cut to facilitate removal and new bolting (stud and nuts) used to replace that bolt

FORM NIS-2 OWNER'S REPORT FOR REPAIRS OR REPLACEMENTS
As Required by the Provisions of the ASME Code Section XI

1. Owner Tennessee Valley Authority (TVA) (Name)
1101 Market Street
Chattanooga, TN 37402-2801 (Address)

Date June 5, 2000

Sheet 1 of 1

2. Plant Browns Ferry Nuclear Plant (BFN)
P. O. Box 2000, Decatur, AL 35609-2000 (Address)

Unit 3

Work Orders (WO) 99-008142-000, 99-008216-000, 99-008262-000, 99-008263-000, 99-008265-000, and 99-008266-000,
(Repair Organization P.O. No., Job No., etc.)

3. Work Performed by TVA-BFN (Name)
P. O. Box 2000, Decatur, AL 35609-2000 (Address)

Type Code Symbol Stamp N/A
Authorization No. N/A
Expiration Date N/A

4. Identification of System System 003, Reactor Feedwater System

5. (a) Applicable Construction Code USAS B31.1.0 19 67 * Edition, N/A Addenda, N/A Code Case

(b) Applicable Edition of Section XI Utilized for Repairs or Replacements 19 89

6. Identification of Components Repaired or Replaced and Replacement Components

Name of Component	Name of Manufacturer	Manufacturer Serial No.	National Board No.	Other Identification	Year Built	Repaired, Replaced, or Replacement	ASME Code Stamped (Yes or No)
Support (Snubber) 3-47B415-54	Bergen-Paterson	TVA Serial No. M0223	N/A	3-SNUB-003-5027	N/A	Replaced	No
Support (Snubber) 3-47B415-54	Bergen-Paterson	TVA Serial No. M0229	N/A	3-SNUB-003-5027	N/A	Replacement	No
Support (Snubber) 3-47B415-19	Bergen-Paterson	TVA Serial No. M0124	N/A	3-SNUB-003-5015	N/A	Replaced	No
Support (Snubber) 3-47B415-19	Bergen-Paterson	TVA Serial No. M0475	N/A	3-SNUB-003-5015	N/A	Replacement	No
Component listing continued on Sheet 2							

7. Description of Work Replaced the referenced snubbers with like-for-like replacements.

8. Tests Conducted: Hydrostatic ☐ Pneumatic ☐ Nominal Operating Pressure ☐ ** See Remarks

Other ☒** Pressure N/A psi Test Temp. N/A °F

NOTE: Supplemental Sheets in form of lists, sketches, or drawings may be used, provided (1) size is 8½ in. X 11 in., (2) information in items 1 through 6 on this report is included on each sheet, and (3) each sheet is numbered and the number of sheets is recorded at the top of this form.

*as amended by additional quality assurance requirements found in Contract 68C37-91602 and Design Criteria BFN-50-7003 and BFN-50-C-7105.

FORM NIS-2 (Back)

9. Remarks WO 99-008142-000 (3-SNUB-003-5027)

Applicable Manufacturer's Data Reports to be attached

The original snubber (TVA S/N M0223) was removed and stored in the snubber room as a spare due to seal life expiration.

The replacement snubber (TVA S/N M0229) was previously located in Unit 2 as HPCI support 2-47B455R0020 (2-SNUB-073-5004) which had been removed by WO 90-06803-00 and kept as a spare. The replacement snubber (TVA S/N M0229) was rebuilt per MPI-0-000-SNB002 and functionally tested per 2-SI-4.6.H-2B.

WO 99-008216-000 (3-SNUB-003-5015)

The original snubber (TVA S/N M0124) was removed and stored in the snubber room as a spare due to seal life expiration.

The replacement snubber (TVA S/N M0475) was previously located in Unit 2 as Main Steam support 2-47B400S0107 (2-SNUB-001-5057), which had been removed by MMI-45 under WO 98-012646-000 and kept as a spare. The replacement snubber (TVA S/N M0475) was rebuilt per MPI-0-000SNB002, and functionally tested per 2-SI-4.6.H-2B.

CERTIFICATE OF COMPLIANCE

We certify that the statements made in the report are correct and this replacement (repair or replacement) conforms to the rules of the ASME Code Section XI.

Type Code Symbol Stamp N/A

Certificate of Authorization No. N/A Expiration Date N/A

Signed Stephen C. Willard, System Engineer (Owner or Owner's Designee, Title) Date 6-9, 20 00

CERTIFICATE OF INSERVICE INSPECTION

I, the undersigned, holding a valid commission issued by the National Board of Boiler and Pressure Vessel Inspectors and the State or Province of TENNESSEE and employed by HSB I & I of HARTFORD, CT have inspected the components described in this Owner's Report during the period 4/3/2000 to 4/24/2000, and state that to the best of my knowledge and belief, the Owner has performed examinations and taken corrective measures described in this Owner's Report in accordance with the requirements of the ASME Code, Section XI.

By signing this certificate neither the Inspector nor his employer makes any warranty, expressed or implied, concerning the examinations and corrective measures described in this Owner's Report. Furthermore, neither the Inspector nor his employer shall be liable in any manner for any personal injury or property damage or a loss of any kind arising from or connected with this inspection.

Albert Todd (Inspector's Signature) Commissions TN3135 "I" "B" "S" "N" "A" (National Board, State, Province, and Endorsements)

Date June 19, 2000

FORM NIS-2 OWNER'S REPORT FOR REPAIRS OR REPLACEMENTS
SUPPLEMENTAL SHEET

1. Owner Tennessee Valley Authority (TVA) (Name)
   1101 Market Street
   Chattanooga, TN 37402-2801 (Address)
2. Plant Browns Ferry Nuclear Plant (BFN) (Name)
   P. O. Box 2000, Decatur, AL 35609-2000 (Address)
3. Work Performed by TVA-BFN (Name)
   P. O. Box 2000, Decatur, AL 35609-2000 (Address)

Date June 5, 2000

Sheet 2 of 2

Unit 3

Work Orders (WO) 99-008142-000, 99-008216-000, 99-008262-000, 99-008263-000, 99-008265-000, and 99-008266-000.
Repair Organization P.O. No., Job No., etc.

Type Code Symbol Stamp N/A

Authorization No. N/A

Expiration Date N/A

4. Identification of System System 003, Reactor Feedwater System

5. (a) Applicable Construction Code USAS B31.1.0 19 67 * Edition, N/A Addenda, N/A Code Case
   (b) Applicable Edition of Section XI Utilized for Repairs or Replacements 19 89

6. Identification of Components Repaired or Replaced and Replacement Components

Name of Component	Name of Manufacturer	Manufacturer Serial No.	National Board No.	Other Identification	Year Built	Repaired, Replaced, or Replacement	ASME Code Stamped (Yes or No)
Support (Snubber) 3-47B415-21	Bergen-Paterson	TVA Serial No. M0253	N/A	3-SNUB-003-5017	N/A	Replaced	No
Support (Snubber) 3-47B415-21	Bergen-Paterson	TVA Serial No. M0042	N/A	3-SNUB-003-5017	N/A	Replacement	No
Support (Snubber) 3-47B415-22	Bergen-Paterson	TVA Serial No. M0249	N/A	3-SNUB-003-5018	N/A	Replaced	No
Support (Snubber) 3-47B415-22	Bergen-Paterson	TVA Serial No. M0279	N/A	3-SNUB-003-5018	N/A	Replacement	No
Support (Snubber) 3-47B415-52	Bergen-Paterson	TVA Serial No. M0382	N/A	3-SNUB-003-5024	N/A	Replaced	No
Support (Snubber) 3-47B415-52	Bergen-Paterson	TVA Serial No. M0137	N/A	3-SNUB-003-5024	N/A	Replacement	No
Support (Snubber) 3-47B415-20	Bergen-Paterson	TVA Serial No. M0238	N/A	3-SNUB-003-5016	N/A	Replaced	No
Support (Snubber) 3-47B415-20	Bergen-Paterson	TVA Serial No. M0278	N/A	3-SNUB-003-5016	N/A	Replacement	No

FORM NIS-2, SUPPLEMENTAL SHEET (Back)

9. Remarks WO 99-008262 (3-SNUB-003-5017)

The original snubber (TVA S/N M0253) was removed and stored in the snubber room as a spare due to seal life expiration.

The replacement snubber (TVA S/N M0042) was previously located in Unit 2 as HPCI support 2-47B455R0020 (2-SNUB-073-5004), which had been removed by WO 98-012567-000 and kept as a spare.

The replacement snubber (TVA S/N M0042) was rebuilt per MPI-0-000SNB002 and functionally tested per 2-SI-4.6.H-2B.

WO 99-008263-000 (3-SNUB-003-5018)

The original snubber (TVA TVA S/N M0249) was removed and stored in the snubber room as a spare due to seal life expiration.

The replacement snubber (TVA S/N M0279) was previously located in Unit 2 as Feedwater support 2-47B415S0012 (2-SNUB-003-5027), which had been removed by WO 98-011466-000 during U2C10 and kept as a spare.

The replacement snubber (TVA S/N M0279) was rebuilt per MPI-0-000SNB002 and functionally tested per 2-SI-4.6.H-2B.

WO 99-008265-000 (3-SNUB-003-5024)

The original snubber (TVA S/N M0382) was removed and stored in the snubber room as a spare due to seal life expiration.

The replacement snubber (TVA S/N M0137) was previously located in Unit 3 as RHR support R-69 (3-SNUB-074-5064), which had been removed by DCN 17701 during U3C5B and kept as a spare.

The replacement snubber (TVA S/N M0137) was rebuilt per MPI-0-000SNB002 and functionally tested per 2-SI-4.6.H-2B.

WO 99-008266-000 (3-SNUB-003-5016)

The original snubber (TVA S/N M0238) was removed and stored in the snubber room as a spare due to seal life expiration.

The replacement snubber (TVA S/N M0278) was previously located in Unit 2 as RHR support R19 (2-SNUB-074-5006), which had been removed by WO 90-006806-000 and kept as a spare.

The replacement snubber (TVA S/N M0278) was rebuilt per MPI-0-000SNB002 and functionally tested per 2-SI-4.6.H-2B.

FORM NIS-2 OWNER'S REPORT FOR REPAIRS OR REPLACEMENTS
As Required by the Provisions of the ASME Code Section XI

1. Owner Tennessee Valley Authority (TVA) (Name)
   1101 Market Street
   Chattanooga, TN 37402-2801 (Address)

   Date June 5, 2000

   Sheet 1 of 1

2. Plant Browns Ferry Nuclear Plant (BFN)
   P. O. Box 2000, Decatur, AL 35609-2000 (Address)

   Unit 3

   Work Order 99-008222-000 (Repair Organization P.O. No., Job No., etc.)

3. Work Performed by TVA-BFN (Name)
   P. O. Box 2000, Decatur, AL 35609-2000 (Address)

   Type Code Symbol Stamp N/A
   Authorization No. N/A
   Expiration Date N/A

4. Identification of System System 069, Reactor Water Cleanup (RWCU) System

5. (a) Applicable Construction Code USAS B31.1.0 19 67 * Edition, N/A Addenda, N/A Code Case

   (b) Applicable Edition of Section XI Utilized for Repairs or Replacements 19 89

6. Identification of Components Repaired or Replaced and Replacement Components

Name of Component	Name of Manufacturer	Manufacturer Serial No.	National Board No.	Other Identification	Year Built	Repaired, Replaced, or Replacement	ASME Code Stamped (Yes or No)
Support (Snubber) 3-47B406-288	Pacific-Scientific	Serial No. 30808	N/A	3-SNUB-069-5004	N/A	Replaced	No
Support (Snubber) 3-47B406-288	Pacific-Scientific	Serial No. 10474	N/A	3-SNUB-069-5004	N/A	Replacement	No

7. Description of Work Replaced snubber 3-SNUB-069-5004 with a like-for-like replacement.

8. Tests Conducted: Hydrostatic ☐ Pneumatic ☐ Nominal Operating Pressure ☐ ** See Remarks

   Other ☒** Pressure N/A psi Test Temp. N/A °F

NOTE: Supplemental Sheets in form of lists, sketches, or drawings may be used, provided (1) size is 8½ in. X 11 in., (2) information in items 1 through 6 on this report is included on each sheet, and (3) each sheet is numbered and the number of sheets is recorded at the top of this form.

*as amended by additional quality assurance requirements found in Contract 68C37-91602 and Design Criteria BFN-50-7069 and BFN-50-C-7105.

FORM NIS-2 (Back)

9. Remarks The original snubber (S/N 30808) was removed and scrapped due to high drag forces.
Applicable Manufacturer's Data Reports to be attached
expiration. A new like-for-like snubber (S/N 10474) was functionally tested per 2-SI-4.6.H-2B and installed.

CERTIFICATE OF COMPLIANCE

We certify that the statements made in the report are correct and this replacement (repair or replacement) conforms to the rules of the ASME Code Section XI.

Type Code Symbol Stamp N/A

Certificate of Authorization No. N/A Expiration Date N/A

Signed Stephen C. Willard, System Engineer (Owner or Owner's Designee, Title) Date 6-19, 20 00

CERTIFICATE OF INSERVICE INSPECTION

I, the undersigned, holding a valid commission issued by the National Board of Boiler and Pressure Vessel Inspectors and the State or Province of TENNESSEE and employed by HSB I & I of HARTFORD, CT have inspected the components described in this Owner's Report during the period 4/21/00 to 5/1/00, and state that to the best of my knowledge and belief, the Owner has performed examinations and taken corrective measures described in this Owner's Report in accordance with the requirements of the ASME Code, Section XI.

By signing this certificate neither the Inspector nor his employer makes any warranty, expressed or implied, concerning the examinations and corrective measures described in this Owner's Report. Furthermore, neither the Inspector nor his employer shall be liable in any manner for any personal injury or property damage or a loss of any kind arising from or connected with this inspection.

Albert Todd (Inspector's Signature) Commissions TN 3135 I B SNA (National Board, State, Province, and Endorsements)

Date June 29 2000

FORM NIS-2 OWNER'S REPORT FOR REPAIRS OR REPLACEMENTS
As Required by the Provisions of the ASME Code Section XI

1. Owner Tennessee Valley Authority (TVA) — Name
   1101 Market Street
   Chattanooga, TN 37402-2801 — Address

   Date June 5, 2000

   Sheet 1 of 1

2. Plant Browns Ferry Nuclear Plant (BFN)
   P. O. Box 2000, Decatur, AL 35609-2000 — Address

   Unit 3

   Work Orders 99-003436-027, 99-003436-028 and 99-008048-000 — Repair Organization P.O. No., Job No., etc.

   SCW 2/5/2000

3. Work Performed by TVA-BFN — Name
   P. O. Box 2000, Decatur, AL 35609-2000 — Address

   Type Code Symbol Stamp N/A

   Authorization No. N/A

   Expiration Date N/A

4. Identification of System System 071, Reactor Core Isolation Cooling (RCIC) System

5. (a) Applicable Construction Code USAS B31.1.0 19 67 * Edition, N/A Addenda, N/A Code Case

   (b) Applicable Edition of Section XI Utilized for Repairs or Replacements 19 89

6. Identification of Components Repaired or Replaced and Replacement Components

Name of Component	Name of Manufacturer	Manufacturer Serial No.	National Board No.	Other Identification	Year Built	Repaired, Replaced, or Replacement	ASME Code Stamped (Yes or No)
Support (Snubber) RCIC R9S	Bergen-Paterson	TVA Serial No. M0409	N/A	3-SNUB-071-5017	N/A	Replaced	No
Support (Snubber) RCIC R9S	Fronek A/DE	ADH-300-2044	N/A	3-SNUB-071-5017	N/A	Replacement	No
Support (Snubber) RCIC R9N	Bergen-Paterson	TVA Serial No. M0053	N/A	3-SNUB-071-5016	N/A	Replaced	No
Support (Snubber) RCIC R9N	Fronek A/DE	ADH-300-2045	N/A	3-SNUB-071-5016	N/A	Replacement	No
Support (Snubber) RCIC H61	Pacific-Scientific	8643	N/A	3-SNUB-071-5003	N/A	Replaced	No
Support (Snubber) RCIC H61	Pacific-Scientific	7819	N/A	3-SNUB-071-5003	N/A	Replacement	No

7. Description of Work Replaced snubbers with like-for-like replacements.

8. Tests Conducted: Hydrostatic ☐ Pneumatic ☐ Nominal Operating Pressure ☐ ** See Remarks

   Other ☒** Pressure N/A psi Test Temp. N/A °F

NOTE: Supplemental Sheets in form of lists, sketches, or drawings may be used, provided (1) size is 8½ in. X 11 in., (2) information in items 1 through 6 on this report is included on each sheet, and (3) each sheet is numbered and the number of sheets is recorded at the top of this form.

*as amended by additional quality assurance requirements found in Contract 68C37-91602 and Design Criteria BFN-50-7071 and BFN-50-C-7105.

FORM NIS-2 (Back)

9. Remarks WO 99-003436-027 (3-SNUB-071-5017)

Applicable Manufacturer's Data Reports to be attached

The original snubber (TVA S/N M0409) was removed due to seal life expiration, passed as-found testing and was stored in the snubber room as a spare. A new like-for-like snubber (S/N ADH-300-2044) was tested per 3-SI-4.6.H-2A and installed.

WO 99-003436-028 (3-SNUB-071-5016)

The original snubber (TVA S/N M0053) was removed due to seal life expiration, passed as-found testing and was stored in the snubber room as a spare. A new like-for-like snubber (S/N ADH-300-2045) was tested per 3-SI-4.6.H-2A and installed.

WO 99-008048-000 (3-SNUB-071-5003)

The original snubber (S/N 8643) was removed and scrapped due to high drag forces.

A new like-for-like snubber (S/N 7819) was tested per 3-SI-4.6.H-2A and installed.

CERTIFICATE OF COMPLIANCE

We certify that the statements made in the report are correct and this replacement (repair or replacement) conforms to the rules of the ASME Code Section XI.

Type Code Symbol Stamp N/A

Certificate of Authorization No. N/A Expiration Date N/A

Signed [signature], System Engineer (Owner or Owner's Designee, Title) Date 6-19, 20 00

CERTIFICATE OF INSERVICE INSPECTION

I, the undersigned, holding a valid commission issued by the National Board of Boiler and Pressure Vessel Inspectors and the State or Province of TENNESSEE and employed by HSB I & I of HARTFORD, CT have inspected the components described in this Owner's Report during the period 5/7/99 to 4/30/99 00 [illegible], and state that to the best of my knowledge and belief, the Owner has performed examinations and taken corrective measures described in this Owner's Report in accordance with the requirements of the ASME Code, Section XI.

By signing this certificate neither the Inspector nor his employer makes any warranty, expressed or implied, concerning the examinations and corrective measures described in this Owner's Report. Furthermore, neither the Inspector nor his employer shall be liable in any manner for any personal injury or property damage or a loss of any kind arising from or connected with this inspection.

[signature] Inspector's Signature Commissions TN3135 IB SN A National Board, State, Province, and Endorsements

Date June 20 2000

FORM NIS-2 OWNER'S REPORT FOR REPAIRS OR REPLACEMENTS
As Required by the Provisions of the ASME Code Section XI

1. Owner Tennessee Valley Authority (TVA)
Name
1101 Market Street
Chattanooga, TN 37402-2801
Address

Date June 5, 2000

Sheet 1 of 1

2. Plant Browns Ferry Nuclear Plant (BFN)
Name
P. O. Box 2000, Decatur, AL 35609-2000
Address

Unit 3

Work Orders (WO) 99-008218-000, 99-008261-000 and 00-003932-000
Repair Organization P.O. No., Job No., etc.

3. Work TVA-BFN
Name
P. O. Box 2000, Decatur, AL 35609-2000
Address

Type Code Symbol Stamp N/A

Authorization No. N/A

Expiration Date N/A

4. Identification of System System 074, Residual Heat Removal System

5. (a) Applicable Construction Code USAS B31.1.0 19 67* Edition, N/A Addenda, N/A Code Case

(b) Applicable Edition of Section XI Utilized for Repairs or Replacements 19 89

6. Identification of Components Repaired or Replaced and Replacement Components

Name of Component	Name of Manufacturer	Manufacturer Serial No.	National Board No.	Other Identification	Year Built	Repaired, Replaced, or Replacement	ASME Code Stamped (Yes or No)
Support (Snubber) 3-47B452-105	Bergen-Paterson	TVA Serial No. M0233	N/A	3-SNUB-074-5065	N/A	Replaced	No
Support (Snubber) 3-47B452-105	Bergen-Paterson	TVA Serial No. M0061	N/A	3-SNUB-074-5065	N/A	Replacement	No
Support (Snubber) 3-47B452-1491	Bergen-Paterson	TVA Serial No. M0287	N/A	3-SNUB-074-5035	N/A	Replaced	No
Support (Snubber) 3-47B452-1491	Bergen-Paterson	TVA Serial No. M0065	N/A	3-SNUB-074-5035	N/A	Replacement	No
Support (Snubber) 3-47B452-3040	Pacific-Scientific	Serial No. 18073	N/A	3-SNUB-074-5062	N/A	Replaced	No
Support (Snubber) 3-47B452-3040	Pacific-Scientific	Serial No. 6858	N/A	3-SNUB-074-5062	N/A	Replacement	No

7. Description of Work Replaced the referenced snubbers with either new or rebuilt, like-for-like snubbers.

8. Tests Conducted: Hydrostatic ☐ Pneumatic ☐ Nominal Operating Pressure ☐ ** See Remarks

Other ☒** Pressure N/A psi Test Temp. N/A °F

NOTE: Supplemental Sheets in form of lists, sketches, or drawings may be used, provided (1) size is 8½ in. X 11 in., (2) information in items 1 through 6 on this report is included on each sheet, and (3) each sheet is numbered and the number of sheets is recorded at the top of this form.

* as amended by additional quality assurances requirements found in contract 68C37-91602, BFN-50-7074 and BFN-50-C-7105

FORM NIS-2 (Back)

9. Remarks WO 99-008218-000 (3-SNUB-074-5065)

Applicable Manufacturer's Data Reports to be attached

The original snubber (TVA S/N M0233) was removed due to seal life expiration and stored in the snubber room as a spare.

The newly installed snubber (TVA S/N M0061) was previously located in Unit 2 as Main Steam support 2-47B400S0103

(2-SNUB-001-5053) and was removed by WO 98-012655-000 during the U2C10 outage and stored as a spare. The newly installed snubber

(TVA S/N M0061) was rebuilt per MPI-0-000-SNB002, and functionally tested per 3-SI-4.6.H-2B.

WO 99-008261-000 (3-SNUB-074-5035)

The original snubber (TVA S/N M0287) was removed due to seal life expiration and stored in the snubber room as a spare.

The newly installed snubber (TVA S/N M0065) was previously located in Unit 2 as Main Steam support 2-47B400S0110

(2-SNUB-001-5060) and was removed during the Unit 2 Cycle 10 outage per WO 98-011689-000 and stored as a spare.

The newly installed snubber (TVA S/N M0065) was rebuilt per MPI-0-000-SNB002, and functionally tested per 3-SI-4.6.H-2B.

During the rebuild process, a new main cylinder was installed in the M0065 snubber.

WO 00-003932-000 (3-SNUB-074-5062)

The original snubber (S/N 18073) was removed and scrapped due to high drag forces.

A new like-for-like snubber (S/N 6858) was functionally tested per 3-SI-4.6.H-2B and then installed.

CERTIFICATE OF COMPLIANCE

We certify that the statements made in the report are correct and this replacement (repair or replacement) conforms to the rules of the ASME Code Section XI.

Type Code Symbol Stamp N/A

Certificate of Authorization No. N/A Expiration Date N/A

Signed Stephen C. Willard, System Engineer (Owner or Owner's Designee, Title) Date 6-19 ,20 00

CERTIFICATE OF INSERVICE INSPECTION

I, the undersigned, holding a valid commission issued by the National Board of Boiler and Pressure Vessel Inspectors and the State or Province of TENNESSEE and employed by HSB I&I of HARTFORD, CT have inspected the components described in this Owner's Report during the period 4-3-00 to 5-1-00, and state that to the best of my knowledge and belief, the Owner has performed examinations and taken corrective measures described in this Owner's Report in accordance with the requirements of the ASME Code, Section XI.

By signing this certificate neither the Inspector nor his employer makes any warranty, expressed or implied, concerning the examinations and corrective measures described in this Owner's Report. Furthermore, neither the Inspector nor his employer shall be liable in any manner for any personal injury or property damage or a loss of any kind arising from or connected with this inspection.

Albert Ladd (Inspector's Signature) Commissions TN 3135 I B S N A (National Board, State, Province, and Endorsements)

Date June 29 20 00

FORM NIS-2 OWNER'S REPORT FOR REPAIRS OR REPLACEMENTS
As Required by the Provisions of the ASME Code Section XI

1. Owner Tennessee Valley Authority (TVA) (Name)
1101 Market Street
Chattanooga, TN 37402-2801 (Address)

Date June 5, 2000

Sheet 1 of 1

2. Plant Browns Ferry Nuclear Plant (BFN) (Name)
P. O. Box 2000, Decatur, AL 35609-2000 (Address)

Unit 3

Work Order (WO) 00-000580-000
Repair Organization P.O. No., Job No., etc.

Type Code Symbol Stamp N/A

3. Work TVA-BFN (Name)
P. O. Box 2000, Decatur, AL 35609-2000 (Address)

Authorization No. N/A

Expiration Date N/A

4. Identification of System System 074, Residual Heat Removal System

5. (a) Applicable Construction Code USAS B31.1.0 19 67* Edition, N/A Addenda, N/A Code Case

(b) Applicable Edition of Section XI Utilized for Repairs or Replacements 19 89

6. Identification of Components Repaired or Replaced and Replacement Components

Name of Component	Name of Manufacturer	Manufacturer Serial No.	National Board No.	Other Identification	Year Built	Repaired, Replaced, or Replacement	ASME Code Stamped (Yes or No)
Pressure Reducing Orifice	Unknown	N/A	N/A	3-PRO-074-0560B	N/A	Replaced	No
Pressure Reducing Orifice	Mid-South Nuclear Inc.	N/A	N/A	3-PRO-074-0560B	N/A	Replacement	No

7. Description of Work Replaced pressure reducing orifice.

8. Tests Conducted: Hydrostatic ☐ Pneumatic ☐ Nominal Operating Pressure ☒

Other ☐ Pressure N/A psi Test Temp. N/A °F

NOTE: Supplemental Sheets in form of lists, sketches, or drawings may be used, provided (1) size is 8½ in. X 11 in., (2) information in items 1 through 6 on this report is included on each sheet, and (3) each sheet is numbered and the number of sheets is recorded at the top of this form.

* as amended by additional quality assurances requirements found in Design Criteria BFN-50-7074 and BFN-50-C-7105.

FORM NIS-2 (Back)

9. Remarks The handle of this orifice was intentionally cut off to allow the installation of a Furmanite seal at this connection. This WO replaced the pressure reducing orifice.

Applicable Manufacturer's Data Reports to be attached

CERTIFICATE OF COMPLIANCE

We certify that the statements made in the report are correct and this replacement (repair or replacement) conforms to the rules of the ASME Code Section XI.

Type Code Symbol Stamp N/A

Certificate of Authorization No. N/A Expiration Date N/A

Signed [signature], System Engineer (Owner or Owner's Designee, Title) Date 6-23 ,20 00

CERTIFICATE OF INSERVICE INSPECTION

I, the undersigned, holding a valid commission issued by the National Board of Boiler and Pressure Vessel Inspectors and the State or Province of TENNESSEE and employed by HSBIEI of HARTFORD, CT have inspected the components described in this Owner's Report during the period 1-19-00 to 5-1-00, and state that to the best of my knowledge and belief, the Owner has performed examinations and taken corrective measures described in this Owner's Report in accordance with the requirements of the ASME Code, Section XI.

By signing this certificate neither the Inspector nor his employer makes any warranty, expressed or implied, concerning the examinations and corrective measures described in this Owner's Report. Furthermore, neither the Inspector nor his employer shall be liable in any manner for any personal injury or property damage or a loss of any kind arising from or connected with this inspection.

[signature] Inspector's Signature

Commissions TN 1130 TB SNA (National Board, State, Province, and Endorsements)

Date June 29 2000

FORM NIS-2 OWNER'S REPORT FOR REPAIRS OR REPLACEMENTS
As Required by the Provisions of the ASME Code Section XI

1. Owner Tennessee Valley Authority (TVA) (Name)
1101 Market Street
Chattanooga, TN 37402-2801 (Address)

Date June 5, 2000

Sheet 1 of 1

2. Plant Browns Ferry Nuclear Plant (BFN)
P. O. Box 2000, Decatur, AL 35609-2000 (Address)

Unit 3

Work Orders 99-008042-000, 99-008047-000 and 99-008259-000 (Repair Organization P.O. No., Job No., etc.)

3. Work Performed by TVA-BFN (Name)
P. O. Box 2000, Decatur, AL 35609-2000 (Address)

Type Code Symbol Stamp N/A
Authorization No. N/A
Expiration Date N/A

4. Identification of System System 075, Core Spray (CS) System

5. (a) Applicable Construction Code USAS B31.1.0 19 67 * Edition, N/A Addenda, N/A Code Case

(b) Applicable Edition of Section XI Utilized for Repairs or Replacements 19 89

6. Identification of Components Repaired or Replaced and Replacement Components

Name of Component	Name of Manufacturer	Manufacturer Serial No.	National Board No.	Other Identification	Year Built	Repaired, Replaced, or Replacement	ASME Code Stamped (Yes or No)
Support (Snubber) 3-47B458-94, R6N	Bergen-Paterson	TVA Serial No. M0186	N/A	2-SNUB-075-5017	N/A	Replaced	No
Support (Snubber) 3-47B458-94, R6N	Bergen-Paterson	TVA Serial No. M0201	N/A	2-SNUB-075-5017	N/A	Replacement	No
Support (Snubber) 3-47B458-94, R6S	Bergen-Paterson	TVA Serial No. M0150	N/A	2-SNUB-075-5018	N/A	Replaced	No
Support (Snubber) 3-47B458-94, R6S	Bergen-Paterson	TVA Serial No. M0453	N/A	2-SNUB-075-5018	N/A	Replacement	No
Support (Snubber) 3-47B458-96, R13S	Bergen-Paterson	TVA Serial No. M0998	N/A	2-SNUB-075-5020	N/A	Replaced	No
Support (Snubber) 3-47B458-96, R13S	Bergen-Paterson	TVA Serial No. M0291	N/A	2-SNUB-075-5020	N/A	Replacement	No

7. Description of Work Replaced snubbers with like-for-like replacements

8. Tests Conducted: Hydrostatic ☐ Pneumatic ☐ Nominal Operating Pressure ☐ ** See Remarks

Other ☒** Pressure N/A psi Test Temp. N/A °F

NOTE: Supplemental Sheets in form of lists, sketches, or drawings may be used, provided (1) size is 8½ in. X 11 in., (2) information in items 1 through 6 on this report is included on each sheet, and (3) each sheet is numbered and the number of sheets is recorded at the top of this form.

*as amended by additional quality assurance requirements found in Contract 68C37-91602 and Design Criteria BFN-50-7075 and BFN-50-C-7105.

FORM NIS-2 (Back)

9. Remarks WO 99-008042-000 (3-SNUB-075-5017)

Applicable Manufacturer's Data Reports to be attached

The original snubber (TVA S/N M0186) was removed due to seal life expiration and stored in the snubber room as a spare.

The newly installed snubber (TVA S/N M0201) was previously located in Unit 3 as Feedwater support SSA9

(3-SNUB-003-5023) and was removed by DCN W17618-2 during the U3C5B outage and stored as a spare.

The newly installed snubber (TVA S/N M0201) was rebuilt per MPI-0-000-SNB002, and functionally tested per 3-SI-4.6.H-2B.

Rebuild included replacement of the piston rod and accumulator rod from snubber M0269 and a new main cylinder tube. M0269 was previously used as Unit 2 support 2-47B452S0053 (2-SNUB-074-5015) and was removed by WO 90-07118-00.

WO 99-008047-000 (3-SNUB-075-5018)

The original snubber (TVA S/N M0150) was removed due to seal life expiration and stored in the snubber room as a spare.

The newly installed snubber (TVA S/N M0453) was previously located in Unit 2 as RHR support 2-47B452S0227

(2-SNUB-074-5039) and was removed by DCN W4667 during the U2C5B outage and stored as a spare.

The newly installed snubber (TVA S/N M0453) was rebuilt per MPI-0-000-SNB002, and functionally tested per 3-SI-4.6.H-2B.

WO 99-008259-000 (3-SNUB-075-5020)

The original snubber (TVA S/N M0998) was removed due to seal life expiration and stored in the snubber room as a spare.

The newly installed snubber (TVA S/N M0291) was previously located in Unit 2 as RHR support R54

(2-SNUB-074-5017) and was removed by 3-SI-4.6.H-2B under WO 90-007110-000 during the U3C5B outage and stored as a spare.

The newly installed snubber (TVA S/N M0291) was rebuilt per MPI-0-000-SNB002, and functionally tested per 3-SI-4.6.H-2B.

CERTIFICATE OF COMPLIANCE

We certify that the statements made in the report are correct and this replacement (repair or replacement) conforms to the rules of the ASME Code Section XI.

Type Code Symbol Stamp N/A

Certificate of Authorization No. N/A Expiration Date N/A

Signed [signature], System Engineer (Owner or Owner's Designee, Title) Date 6-29, 2000

CERTIFICATE OF INSERVICE INSPECTION

I, the undersigned, holding a valid commission issued by the National Board of Boiler and Pressure Vessel Inspectors and the State or Province of TENNESSEE and employed by HSB I&I of HARTFORD, CT have inspected the components described in this Owner's Report during the period 3/1/00 to 5/1/00, and state that to the best of my knowledge and belief, the Owner has performed examinations and taken corrective measures described in this Owner's Report in accordance with the requirements of the ASME Code, Section XI.

By signing this certificate neither the Inspector nor his employer makes any warranty, expressed or implied, concerning the examinations and corrective measures described in this Owner's Report. Furthermore, neither the Inspector nor his employer shall be liable in any manner for any personal injury or property damage or a loss of any kind arising from or connected with this inspection.

[signature] (Inspector's Signature) Commissions TN 3135 IBSNA (National Board, State, Province, and Endorsements)

Date June 29 2000

FORM NIS-2 OWNER'S REPORT FOR REPAIRS OR REPLACEMENTS
As Required by the Provisions of the ASME Code Section XI

1. Owner Tennessee Valley Authority (TVA)
Name
1101 Market Street
Chattanooga, TN 37402-2801
Address

Date June 22, 2000

Sheet 1 of 1

2. Plant Browns Ferry Nuclear Plant (BFN)
Name
P. O. Box 2000, Decatur, AL 35609-2000
Address

Unit 3

Design Change Notice (DCN) T40079A and Work Order (WO) 98-000036-000
Repair Organization P.O. No., Job No., etc.

3. Work TVA-BFN
Name
P. O. Box 2000, Decatur, AL 35609-2000
Address

Type Code Symbol Stamp N/A

Authorization No. N/A

Expiration Date N/A

4. Identification of System System 074, Residual Heat Removal System

5. (a) Applicable Construction Code USAS B31.1.0 19 67* Edition, N/A Addenda, N/A Code Case

(b) Applicable Edition of Section XI Utilized for Repairs or Replacements 19 89

6. Identification of Components Repaired or Replaced and Replacement Components

Name of Component	Name of Manufacturer	Manufacturer Serial No.	National Board No.	Other Identification	Year Built	Repaired, Replaced, or Replacement	ASME Code Stamped (Yes or No)
Support 3-47B452-3177	TVA	N/A	N/A	3-FCV-074-0054	N/A	Replacement	No

7. Description of Work Four ½" plates were welded to the bottom of 3-FCV-074-0054 for support of a test line.

8. Tests Conducted: Hydrostatic ☐ Pneumatic ☐ Nominal Operating Pressure ☒** **See Remarks

Other ☐ Pressure N/A psi Test Temp. N/A °F

NOTE: Supplemental Sheets in form of lists, sketches, or drawings may be used, provided (1) size is 8½ in. X 11 in., (2) information in items 1 through 6 on this report is included on each sheet, and (3) each sheet is numbered and the number of sheets is recorded at the top of this form.

* as amended by additional quality assurances requirements found in Design Criteria BFN-50-7074 and BFN-50-C-7105.

FORM NIS-2 (Back)

9. Remarks Four ½" plates were welded to the bottom of 3-FCV-074-0054 for support of a 1" test line. A pressure test is not required per IWA-7400 (b)(3); however, this valve is part of the primary system pressure boundary and this modification was leak tested during the primary system leakage test (3-SI-3.3.1.A) at the end of the U3C9 outage.

Applicable Manufacturer's Data Reports to be attached

CERTIFICATE OF COMPLIANCE

We certify that the statements made in the report are correct and this replacement (repair or replacement) conforms to the rules of the ASME Code Section XI.

Type Code Symbol Stamp N/A

Certificate of Authorization No. N/A Expiration Date N/A

Signed [signature], System Engineer (Owner or Owner's Designee, Title) Date 6-22, 20 00

CERTIFICATE OF INSERVICE INSPECTION

I, the undersigned, holding a valid commission issued by the National Board of Boiler and Pressure Vessel Inspectors and the State or Province of TENNESSEE and employed by HSBI&I of HARTFORD, CT have inspected the components described in this Owner's Report during the period 10/8/98 to 4/30/00, and state that to the best of my knowledge and belief, the Owner has performed examinations and taken corrective measures described in this Owner's Report in accordance with the requirements of the ASME Code, Section XI.

By signing this certificate neither the Inspector nor his employer makes any warranty, expressed or implied, concerning the examinations and corrective measures described in this Owner's Report. Furthermore, neither the Inspector nor his employer shall be liable in any manner for any personal injury or property damage or a loss of any kind arising from or connected with this inspection.

[signature] Commissions TN3135 IBSNA

Inspector's Signature National Board, State, Province, and Endorsements

Date June 22 20 00

FORM NIS-2 OWNER'S REPORT FOR REPAIRS OR REPLACEMENTS
As Required by the Provisions of the ASME Code Section XI

1. Owner Tennessee Valley Authority (TVA)
Name
1101 Market Street
Chattanooga, TN 37402-2801
Address

Date June 22, 2000

Sheet 1 of 1

2. Plant Browns Ferry Nuclear Plant (BFN)
Name
P. O. Box 2000, Decatur, AL 35609-2000
Address

Unit 3

Design Change Notice (DCN) T40079A and Work Order (WO) 98-000036-000
Repair Organization P.O. No., Job No., etc.

3. Work TVA-BFN
Name
P. O. Box 2000, Decatur, AL 35609-2000
Address

Type Code Symbol Stamp N/A

Authorization No. N/A

Expiration Date N/A

4. Identification of System System 074, Residual Heat Removal System

5. (a) Applicable Construction Code USAS B31.1.0 19 67* Edition, N/A Addenda, N/A Code Case

(b) Applicable Edition of Section XI Utilized for Repairs or Replacements 19 89

6. Identification of Components Repaired or Replaced and Replacement Components

Name of Component	Name of Manufacturer	Manufacturer Serial No.	National Board No.	Other Identification	Year Built	Repaired, Replaced, or Replacement	ASME Code Stamped (Yes or No)
Support 3-47B452-3177	TVA	N/A	N/A	3-FCV-074-0054	N/A	Replacement	No

7. Description of Work Four ½" plates were welded to the bottom of 3-FCV-074-0054 for support of a test line.

8. Tests Conducted: Hydrostatic ☐ Pneumatic ☐ Nominal Operating Pressure ☒** **See Remarks

Other ☐ Pressure N/A psi Test Temp. N/A °F

NOTE: Supplemental Sheets in form of lists, sketches, or drawings may be used, provided (1) size is 8½ in. X 11 in., (2) information in items 1 through 6 on this report is included on each sheet, and (3) each sheet is numbered and the number of sheets is recorded at the top of this form.

* as amended by additional quality assurances requirements found in Design Criteria BFN-50-7074 and BFN-50-C-7105.

FORM NIS-2 (Back)

9. Remarks Four ½" plates were welded to the bottom of 3-FCV-074-0054 for support of a 1" test line. A pressure test is not required per IWA-7400 (b)(3); however, this valve is part of the primary system pressure boundary and this modification was leak tested during the primary system leakage test (3-SI-3.3.1.A) at the end of the U3C9 outage.

Applicable Manufacturer's Data Reports to be attached

CERTIFICATE OF COMPLIANCE

We certify that the statements made in the report are correct and this replacement (repair or replacement) conforms to the rules of the ASME Code Section XI.

Type Code Symbol Stamp N/A

Certificate of Authorization No. N/A Expiration Date N/A

Signed [signature], System Engineer (Owner or Owner's Designee, Title) Date 6-22, 20 00

CERTIFICATE OF INSERVICE INSPECTION

I, the undersigned, holding a valid commission issued by the National Board of Boiler and Pressure Vessel Inspectors and the State or Province of TENNESSEE and employed by HSB I & I of HARTFORD, CT have inspected the components described in this Owner's Report during the period 10/8/98 to 4/30/00, and state that to the best of my knowledge and belief, the Owner has performed examinations and taken corrective measures described in this Owner's Report in accordance with the requirements of the ASME Code, Section XI.

By signing this certificate neither the Inspector nor his employer makes any warranty, expressed or implied, concerning the examinations and corrective measures described in this Owner's Report. Furthermore, neither the Inspector nor his employer shall be liable in any manner for any personal injury or property damage or a loss of any kind arising from or connected with this inspection.

[signature] (Inspector's Signature) Commissions TN3135 IBSNA (National Board, State, Province, and Endorsements)

Date June 22 20 00

FORM NIS-2 OWNER'S REPORT FOR REPAIRS OR REPLACEMENTS
As Required by the Provisions of the ASME Code Section XI

1. Owner Tennessee Valley Authority (TVA) (Name)
1101 Market Street
Chattanooga, TN 37402-2801 (Address)

Date June 22, 2000

Sheet 1 of 1

2. Plant Browns Ferry Nuclear Plant (BFN)
P. O. Box 2000, Decatur, AL 35609-2000 (Address)

Unit 3

Design Change Notice (DCN) 50097A, Stage 1 and Work Order (WO) 99-011842-000 (Repair Organization P.O. No., Job No., etc.)

3. Work Performed by TVA-BFN (Name)
P. O. Box 2000, Decatur, AL 35609-2000 (Address)

Type Code Symbol Stamp N/A

Authorization No. N/A

Expiration Date N/A

4. Identification of System System 075, Core Spray (CS) System

5. (a) Applicable Construction Code USAS B31.1.0 19 67 * Edition, N/A Addenda, N-416-1 Code Case

(b) Applicable Edition of Section XI Utilized for Repairs or Replacements 19 89

6. Identification of Components Repaired or Replaced and Replacement Components

Name of Component	Name of Manufacturer	Manufacturer Serial No.	National Board No.	Other Identification	Year Built	Repaired, Replaced, or Replacement	ASME Code Stamped (Yes or No)
PSC Pumps Suction Isolation Valve	BW/IP International	E926A-1-1	N/A	3-FCV-075-0083	N/A	Replacement, new component	No
3"x¾" test connection sockolet	Consolidated Power Supply	N/A	N/A	N/A	N/A	Replacement, new component	No

7. Description of Work Installed new 3" block valve for PSC pumps suction isolation valve and added a ¾" test connection.

8. Tests Conducted: Hydrostatic ☐ Pneumatic ☐ Nominal Operating Pressure ☒

Other ☐ Pressure N/A psi Test Temp. N/A °F

NOTE: Supplemental Sheets in form of lists, sketches, or drawings may be used, provided (1) size is 8½ in. X 11 in., (2) information in items 1 through 6 on this report is included on each sheet, and (3) each sheet is numbered and the number of sheets is recorded at the top of this form.

*as amended by additional quality assurance requirements found in Release 1365038 & 1364025 and Design Criteria BFN-50-7075 and BFN-50-C-7105.

FORM NIS-2 (Back)

9. Remarks Installed new 3" block valve for PSC pumps suction isolation valve and added a ¾" test connection.
Applicable Manufacturer's Data Reports to be attached

CERTIFICATE OF COMPLIANCE

We certify that the statements made in the report are correct and this replacement (repair or replacement) conforms to the rules of the ASME Code Section XI.

Type Code Symbol Stamp N/A

Certificate of Authorization No. N/A Expiration Date N/A

Signed [signature], System Engineer (Owner or Owner's Designee, Title) Date 6-22, 20 00

CERTIFICATE OF INSERVICE INSPECTION

I, the undersigned, holding a valid commission issued by the National Board of Boiler and Pressure Vessel Inspectors and the State or Province of TENNESSEE and employed by HSBI&I of HARTFORD, CT have inspected the components described in this Owner's Report during the period 3/30/00 to 5/1/00, and state that to the best of my knowledge and belief, the Owner has performed examinations and taken corrective measures described in this Owner's Report in accordance with the requirements of the ASME Code, Section XI.

By signing this certificate neither the Inspector nor his employer makes any warranty, expressed or implied, concerning the examinations and corrective measures described in this Owner's Report. Furthermore, neither the Inspector nor his employer shall be liable in any manner for any personal injury or property damage or a loss of any kind arising from or connected with this inspection.

Albert Todd (Inspector's Signature) Commissions TN3135 IBSNA (National Board, State, Province, and Endorsements)

Date June 29 2000

FORM NIS-2 OWNER'S REPORT FOR REPAIRS OR REPLACEMENTS
As Required by the Provisions of the ASME Code Section XI

1. Owner Tennessee Valley Authority (TVA) (Name)
1101 Market Street
Chattanooga, TN 37402-2801 (Address)

Date June 21, 2000

Sheet 1 of 1

2. Plant Browns Ferry Nuclear Plant (BFN) (Name)
P. O. Box 2000, Decatur, AL 35609-2000 (Address)

Unit 3

Design Change Notice (DCN) T39254A. Work Plan (WP) T39254-001 and Work Order (WO) 99-012889-000
Repair Organization P.O. No., Job No., etc.

3. Work Performed by TVA-BFN (Name)
P. O. Box 2000, Decatur, AL 35609-2000 (Address)

Type Code Symbol Stamp N/A

Authorization No. N/A

Expiration Date N/A

4. Identification of System System 071, Reactor Core Isolation Cooling (RCIC) System

5. (a) Applicable Construction Code (valve) ASME, Section III, 1993 Edition, with Code Case N-540 (less N-stamp). (piping) USAS B31.1.0 19 67 * Edition, N/A Addenda, N-416-1 Code Case

(b) Applicable Edition of Section XI Utilized for Repairs or Replacements 19 89

6. Identification of Components Repaired or Replaced and Replacement Components

Name of Component	Name of Manufacturer	Manufacturer Serial No.	National Board No.	Other Identification	Year Built	Repaired, Replaced, or Replacement	ASME Code Stamped (Yes or No)
RCIC Turbine Exhaust Check Valve	Velan Model P33579-2-25	N/A	N/A	3-CKV-071-0580	N/A	Replaced	No
RCIC Turbine Exhaust Check Valve	BW/IP International 10"-150# -Globe Lift Check Viv	EZ821-1-1	N/A	3-CKV-071-0580	1996	Replacement	No
10" piping	North Star Steel	N/A	N/A	N/A	1996	Replacement	No

7. Description of Work Design change replaced the RCIC turbine exhaust check valve and some associated piping.

8. Tests Conducted: Hydrostatic ☐ Pneumatic ☐ Nominal Operating Pressure ☒

Other ☐ Pressure N/A psi Test Temp. N/A °F

NOTE: Supplemental Sheets in form of lists, sketches, or drawings may be used, provided (1) size is 8½ in. X 11 in., (2) information in items 1 through 6 on this report is included on each sheet, and (3) each sheet is numbered and the number of sheets is recorded at the top of this form.

*as amended by additional quality assurance requirements found in Contract P-96N2D-184337-000 and Design Criteria BFN-50-7071 and BFN-50-C-7105.

FORM NIS-2 (Back)

9. Remarks Replaced the RCIC valve and some associated piping.
Applicable Manufacturer's Data Reports to be attached

CERTIFICATE OF COMPLIANCE

We certify that the statements made in the report are correct and this replacement (repair or replacement) conforms to the rules of the ASME Code Section XI.

Type Code Symbol Stamp N/A

Certificate of Authorization No. N/A Expiration Date N/A

Signed Stephen C. Willard, System Engineer (Owner or Owner's Designee, Title) Date 6-27, 20 00

CERTIFICATE OF INSERVICE INSPECTION

I, the undersigned, holding a valid commission issued by the National Board of Boiler and Pressure Vessel Inspectors and the State or Province of TENNESSEE and employed by HSB I&I of HARTFORD, CT have inspected the components described in this Owner's Report during the period 4/6/00 to 5/2/00, and state that to the best of my knowledge and belief, the Owner has performed examinations and taken corrective measures described in this Owner's Report in accordance with the requirements of the ASME Code, Section XI.

By signing this certificate neither the Inspector nor his employer makes any warranty, expressed or implied, concerning the examinations and corrective measures described in this Owner's Report. Furthermore, neither the Inspector nor his employer shall be liable in any manner for any personal injury or property damage or a loss of any kind arising from or connected with this inspection.

Albert Todd (Inspector's Signature) Commissions TN3135 IB SNA (National Board, State, Province, and Endorsements)

Date June 29 2000

FORM NIS-2 OWNER'S REPORT FOR REPAIRS OR REPLACEMENTS
As Required by the Provisions of the ASME Code Section XI

1. Owner Tennessee Valley Authority (TVA) (Name)
1101 Market Street
Chattanooga, TN 37402-2801 (Address)

Date June 21, 2000

Sheet 1 of 1

2. Plant Browns Ferry Nuclear Plant (BFN) (Name)
P. O. Box 2000, Decatur, AL 35609-2000 (Address)

Unit 3

Design Change Notice (DCN) T40713A, Work Plan T40713-006 and Work Order (WO) 99-012995-000
Repair Organization P.O. No., Job No., etc.

3. Work Performed by TVA-BFN (Name)
P. O. Box 2000, Decatur, AL 35609-2000 (Address)

Type Code Symbol Stamp N/A

Authorization No. N/A

Expiration Date N/A

4. Identification of System System 071, Reactor Core Isolation Cooling (RCIC) System

5. (a) Applicable Construction Code (valve) ASME, Section III, 1995 Edition, Winter 1997 Addenda (less N-stamp) (piping) USAS B31.1.0 19 67 * Edition, N/A Addenda, N-416-1 Code Case

(b) Applicable Edition of Section XI Utilized for Repairs or Replacements 19 89

6. Identification of Components Repaired or Replaced and Replacement Components

Name of Component	Name of Manufacturer	Manufacturer Serial No.	National Board No.	Other Identification	Year Built	Repaired, Replaced, or Replacement	ASME Code Stamped (Yes or No)
RCIC Steam Line Isolation Valve	Walworth 5232 PSB WE	C-48295	N/A	3-FCV-071-0002	1998	Replaced	No
RCIC Steam Line Isolation Valve	BW/IP International 3"-900# DD Gate Vlv	E488A-1-2	N/A	3-FCV-071-0002	1998	Replacement	No
3" piping	unknown	N/A	N/A	N/A	1999	Replaced	No
3" piping	Consolated Power Supply	N/A	N/A	N/A	1999	Replacement	No

7. Description of Work Replaced the RCIC steam supply line inboard isolation valve and some associated piping.

8. Tests Conducted: Hydrostatic ☐ Pneumatic ☐ Nominal Operating Pressure ☒

Other ☐ Pressure N/A psi Test Temp. N/A °F

NOTE: Supplemental Sheets in form of lists, sketches, or drawings may be used, provided (1) size is 8½ in. X 11 in., (2) information in items 1 through 6 on this report is included on each sheet, and (3) each sheet is numbered and the number of sheets is recorded at the top of this form.

*as amended by additional quality assurance requirements found in Release 1240323 Supp. 4 & 1391527 and Design Criteria BFN-50-7071 and BFN-50-C-7105.

FORM NIS-2 (Back)

9. Remarks Replaced the RCIC steam supply line inboard isolation valve and some associated piping.
Applicable Manufacturer's Data Reports to be attached

CERTIFICATE OF COMPLIANCE

We certify that the statements made in the report are correct and this replacement (repair or replacement) conforms to the rules of the ASME Code Section XI.

Type Code Symbol Stamp N/A

Certificate of Authorization No. N/A Expiration Date N/A

Signed [signature], System Engineer (Owner or Owner's Designee, Title) Date 6-22, 2000

CERTIFICATE OF INSERVICE INSPECTION

I, the undersigned, holding a valid commission issued by the National Board of Boiler and Pressure Vessel Inspectors and the State or Province of TENNESSEE and employed by HSB I & I of HARTFORD, CT have inspected the components described in this Owner's Report during the period 10/1/99 to 5/2/00, and state that to the best of my knowledge and belief, the Owner has performed examinations and taken corrective measures described in this Owner's Report in accordance with the requirements of the ASME Code, Section XI.

By signing this certificate neither the Inspector nor his employer makes any warranty, expressed or implied, concerning the examinations and corrective measures described in this Owner's Report. Furthermore, neither the Inspector nor his employer shall be liable in any manner for any personal injury or property damage or a loss of any kind arising from or connected with this inspection.

[signature] Commissions TN 3136 IB SNA
Inspector's Signature National Board, State, Province, and Endorsements

Date June 29 2000

FORM NIS-2 OWNER'S REPORT FOR REPAIRS OR REPLACEMENTS
As Required by the Provisions of the ASME Code Section XI

1. Owner Tennessee Valley Authority (TVA) (Name)
1101 Market Street
Chattanooga, TN 37402-2801 (Address)

Date June 23, 2000

Sheet 1 of 1

2. Plant Browns Ferry Nuclear Plant (BFN) (Name)
P. O. Box 2000, Decatur, AL 35609-2000 (Address)

Unit 3

Design Change Notice (DCN) T41019, Work Plan T41019-001, Work Order (WO) 99-013762-000 (Repair Organization P.O. No., Job No., etc.)

3. Work Performed by TVA-BFN (Name)
P. O. Box 2000, Decatur, AL 35609-2000 (Address)

Type Code Symbol Stamp N/A

Authorization No. N/A

Expiration Date N/A

4. Identification of System System 001, Main Steam System

5. (a) Applicable Construction Code USAS B31.1.0 19 67 * Edition, N/A Addenda, N-416-1 Code Case

(b) Applicable Edition of Section XI Utilized for Repairs or Replacements 19 89

6. Identification of Components Repaired or Replaced and Replacement Components

Name of Component	Name of Manufacturer	Manufacturer Serial No.	National Board No.	Other Identification	Year Built	Repaired, Replaced, or Replacement	ASME Code Stamped (Yes or No)
Main Steam to Off- Gas Preheater Isol Vlv	FlowServe 1878	E969A-1-1	N/A	3-SHV-001-0741	N/A	Replacement, new component	No
Main Steam to Off- Gas Preheater Check Vlv	Durabla	E966A-1-5	N/A	3-CKV-001-0742	N/A	Replacement, new component	No
Main Steam to Off- Gas Preheater Isol Vlv	FlowServe 1878	E969A-1-2	N/A	3-SHV-001-0743	N/A	Replacement, new component	No
Main Steam to Off- Gas Preheater Check Vlv	Durabla	E966A-1-4	N/A	3-CKV-001-0744	N/A	Replacement, new component	No
piping	Kawasaki Steel	N/A	N/A	N/A	N/A	Replacement, new component	No
Support 3-47B400-2017	TVA	N/A	N/A	3-47B400-2017	N/A	Replacement, new component	No
Support 3-47B400-2018	TVA	N/A	N/A	3-47B400-2018	N/A	Replacement, new component	No
Support 3-47B400-2019	TVA	N/A	N/A	3-47B400-2019	N/A	Replacement, new component	No
Support 3-47B448-3034	TVA	N/A	N/A	3-47B448-3034	N/A	Replacement, new component	No

7. Description of Work Rerouted steam supply piping to the preheaters and added isolation and check valves.

8. Tests Conducted: Hydrostatic ☐ Pneumatic ☐ Nominal Operating Pressure ☒

Other ☐ Pressure N/A psi Test Temp. N/A °F

NOTE: Supplemental Sheets in form of lists, sketches, or drawings may be used, provided (1) size is 8½ in. X 11 in., (2) information in items 1 through 6 on this report is included on each sheet, and (3) each sheet is numbered and the number of sheets is recorded at the top of this form.

*as amended by additional quality assurance requirements found in Design Criteria BFN-50-7001 and BFN-50-C-7105.

FORM NIS-2 (Back)

9. Remarks Rerouted steam supply piping to the preheaters and added isolation and check valves.
Applicable Manufacturer's Data Reports to be attached

CERTIFICATE OF COMPLIANCE

We certify that the statements made in the report are correct and this replacement (repair or replacement) conforms to the rules of the ASME Code Section XI.

Type Code Symbol Stamp N/A

Certificate of Authorization No. N/A Expiration Date N/A

Signed [signature], System Engineer (Owner or Owner's Designee, Title) Date 6-27, 20 00

CERTIFICATE OF INSERVICE INSPECTION

I, the undersigned, holding a valid commission issued by the National Board of Boiler and Pressure Vessel Inspectors and the State or Province of TENNESSEE and employed by MSBI & I of HARTFORD, CT have inspected the components described in this Owner's Report during the period 3/26/00 to 5/2/00, and state that to the best of my knowledge and belief, the Owner has performed examinations and taken corrective measures described in this Owner's Report in accordance with the requirements of the ASME Code, Section XI.

By signing this certificate neither the Inspector nor his employer makes any warranty, expressed or implied, concerning the examinations and corrective measures described in this Owner's Report. Furthermore, neither the Inspector nor his employer shall be liable in any manner for any personal injury or property damage or a loss of any kind arising from or connected with this inspection.

Albert Todd (Inspector's Signature) Commissions TN3135 I B SNA (National Board, State, Province, and Endorsements)

Date 6/29 20 00

FORM NIS-2 OWNER'S REPORT FOR REPAIRS OR REPLACEMENTS
As Required by the Provisions of the ASME Code Section XI

1. Owner Tennessee Valley Authority (TVA) (Name)
   1101 Market Street
   Chattanooga, TN 37402-2801 (Address)

   Date June 22, 2000

   Sheet 1 of 1

2. Plant Browns Ferry Nuclear Plant (BFN) (Name)
   P. O. Box 2000, Decatur, AL 35609-2000 (Address)

   Unit 3

   Design Change Notice (DCN) T41160A
   Repair Organization P.O. No., Job No., etc.

3. Work Performed by TVA-BFN (Name)
   P. O. Box 2000, Decatur, AL 35609-2000 (Address)

   Type Code Symbol Stamp N/A
   Authorization No. N/A
   Expiration Date N/A

4. Identification of System System 073, High Pressure Coolant Injection (HPCI) System

5. (a) Applicable Construction Code USAS B31.1.0 19 67 * Edition, N/A Addenda, N/A Code Case

   (b) Applicable Edition of Section XI Utilized for Repairs or Replacements 19 89

6. Identification of Components Repaired or Replaced and Replacement Components

Name of Component	Name of Manufacturer	Manufacturer Serial No.	National Board No.	Other Identification	Year Built	Repaired, Replaced, or Replacement	ASME Code Stamped (Yes or No)
HPCI Pipe Support 3-47B455-635	TVA	N/A	N/A	3-47B455-635		Repaired	No

7. Description of Work Modified HPCI support 3-47B455-635 to reduce the gaps between the piping and the pipe support.

8. Tests Conducted: Hydrostatic ☐ Pneumatic ☐ Nominal Operating Pressure ☐ ** - See Remarks

   Other ☒** Pressure N/A psi Test Temp. N/A °F

NOTE: Supplemental Sheets in form of lists, sketches, or drawings may be used, provided (1) size is 8½ in. X 11 in., (2) information in items 1 through 6 on this report is included on each sheet, and (3) each sheet is numbered and the number of sheets is recorded at the top of this form.

*as amended by additional quality assurance requirements found in CD-Q307-911001 and Design Criteria BFN-50-7073 and BFN-50-C-7105.

FORM NIS-2 (Back)

9. Remarks Modified HPCI support 3-47B455-635 to reduce the gaps between the piping and the pipe support. Installed shim plates. A VT-3 inspection was performed following installation of the shim plates.

Applicable Manufacturer's Data Reports to be attached

CERTIFICATE OF COMPLIANCE

We certify that the statements made in the report are correct and this repair (repair or replacement) conforms to the rules of the ASME Code Section XI.

Type Code Symbol Stamp N/A

Certificate of Authorization No. N/A Expiration Date N/A

Signed [signature], System Engineer (Owner or Owner's Designee, Title) Date 6-27, 20 00

CERTIFICATE OF INSERVICE INSPECTION

I, the undersigned, holding a valid commission issued by the National Board of Boiler and Pressure Vessel Inspectors and the State or Province of TENNESSEE and employed by HSB I & I of HARTFORD, CT have inspected the components described in this Owner's Report during the period 4/18/00 to 5/1/00, and state that to the best of my knowledge and belief, the Owner has performed examinations and taken corrective measures described in this Owner's Report in accordance with the requirements of the ASME Code, Section XI.

By signing this certificate neither the Inspector nor his employer makes any warranty, expressed or implied, concerning the examinations and corrective measures described in this Owner's Report. Furthermore, neither the Inspector nor his employer shall be liable in any manner for any personal injury or property damage or a loss of any kind arising from or connected with this inspection.

Albert Ladd (Inspector's Signature) Commissions TN3135 IBSNA (National Board, State, Province, and Endorsements)

Date June 27 20 00