123 Main Street
White Plains, New York 10601
914 681.6950
914 287.3309 (Fax)

NewYorkPower Authority

James Knubel
Senior Vice President and
Chief Nuclear Officer

July 18, 2000
IPN-00-055

U.S. Nuclear Regulatory Commission
ATTN: Document Control Desk
Washington, DC 20555

Subject: Indian Point 3 Nuclear Power Plant
Docket 50-286
License No. DPR-64
Third Ten Year Inservice Inspection Interval Program Plan

Reference: 1. NYPA letter to the NRC, "Extension of the Current Inservice Inspection Program and Inservice Testing Program Intervals (IPN-99-051)," dated May 4, 1999.

Dear Sir:

This letter submits the Third Ten Year Inservice Inspection (ISI) Interval Program for the Indian Point 3 Nuclear Power Plant. This interval commences on July 21, 2000.

Pursuant to 10 CFR 50.55a, requests for relief from ASME Code requirements are included as Table 4.0, Attachment A to the Program Plan.

Five relief requests (RR 3-1, RR 3-2, RR 3-3, RR 3-4 and RR 3-5) involving pressure testing are included in this submittal. Relief requests RR 3-3 and RR 3-4 involve the requirements for surface and volumetric examinations and VT-2 testing. Both relief requests, when used in tandem, will allow pressure testing flexibility and potentially minimize radiation exposure.

In addition, Relief Request 3-24 (examination requirements for class MC and Metallic Liners of Class CC components) and Relief Request 3-25 (examination requirements for Class CC Concrete Components) are included for review and approval in this submittal. Based on current plant refueling outage schedules and the requirement for full implementation by September 9, 2001, a Containment Inservice Inspection examination program was established based on the 1992 code requirements. Implementation of these relief requests now, utilizing the 1998 code, will reduce the overall impact to the resources of the Power Authority.

A047

This letter contains no new commitments. If you have any questions, please contact Ms. C. D. Faison.

Very truly yours,

J. Knubel
Senior Vice President and
Chief Nuclear Officer

Attachment: As stated

cc: Regional Administrator
U.S. Nuclear Regulatory Commission
475 Allendale Road
King of Prussia, PA 19406

Resident Inspector's Office
U.S. Nuclear Regulatory Commission
P.O. Box 337
Buchanan, NY 10511

Mr. George Wunder, Project Manager
Project Directorate I
Division of Licensing Project Management
U.S. Nuclear Regulatory Commission
Mail Stop 8C2
Washington, DC 20555

Mr. Robert Penny
Director - Engineering Programs

Westinghouse
Nuclear Service Division

Ten-Year Inservice Inspection Program
3rd Inspection Interval
July 21, 2000 – July 20, 2009
of the
Indian Point Unit No. 3
Nuclear Power Plant
for
New York Power Authority
123 Main Street
White Plains, New York 10601

Revision 0

NEW YORK POWER AUTHORITY

Inservice Inspection Program

Indian Point Unit No. 3
Third 10-Year Interval
July 21, 2000 – July 20, 2009

UNCONTROLLED

NEW YORK POWER AUTHORITY
DOCUMENT REVIEW STATUS
STATUS NO: 1 ☑ ACCEPTED 2 ☐ ACCEPTED AS NOTED RESUBMITTAL NOT REQUIRED 3 ☐ ACCEPTED AS NOTED RESUBMITTAL REQUIRED 4 ☐ NOT ACCEPTED
Permission to proceed does not constitute acceptance or approval of design details, calculations, analysis, test methods or materials developed or selected by the supplier and does not relieve supplier from full compliance with contractual negotiations.
REVIEWED BY: [illegible] TITLE: ISI Eng'r
DATE: 07/14/00

Revision 0

Prepared by
Westinghouse Electric Company
Nuclear Services Division
Pittsburgh, Pennsylvania 15230

NEW YORK POWER AUTHORITY
INDIAN POINT UNIT NO. 3
TEN YEAR INSERVICE INSPECTION INTERVAL PROGRAM
JULY 21, 2000 THRU JULY 20, 2009

INDIAN POINT UNIT NO. 3 WELD AND SUPPORT ISI PLAN
REVISION 0

PREPARED BY: James R. Delbusso 06/19/00
JAMES R. DELBUSSO, ISI COORDINATOR DATE
WESTINGHOUSE NUCLEAR SERVICES DIVISION
WESDYNE INTERNATIONAL

REVIEWED BY: John W Bell 06/19/00
JOHN W. BELL, ISI ENGINEER DATE
WESTINGHOUSE NUCLEAR SERVICES DIVISION
WESDYNE INTERNATIONAL

APPROVED BY: J A Munson 6/20/00
JAMES A. MUNSON, MANAGER DATE
WESTINGHOUSE NUCLEAR SERVICES DIVISION
WESDYNE INTERNATIONAL

APPROVED BY: Anders Eng 6/28/00
ANDERS ENG, ISI ENGINEER DATE
INDIAN POINT UNIT NO. 3
NEW YORK POWER AUTHORITY

ANII REVIEW: Hilary Evans 6/28/00
DATE

AGENCY: FACTORY MUTUAL INSURANCE Co.

ip-sign

NEW YORK POWER AUTHORITY

INDIAN POINT UNIT NO.3
INSERVICE INSPECTION PROGRAM
THIRD TEN - YEAR INTERVAL
JULY 21, 2000 - JULY 20, 2009

TABLE OF CONTENTS

TAB	TABLE	TITLE	PAGE
1.0	1.0	Introduction	1 thru 4
2.0	2.0	Administrative Control	1
3.0	3.0	System Boundaries	1 & 2
3.0	3.0	Class 1 Components and Piping	3 thru 8
3.0	3.0	Class 2 Components and Piping	8 thru 17
3.0	3.0	Class 3 Components and Piping	17 thru 27
3.0	3.0	Service Water System Class 3A Portion	27
3.0	3.0	Class 1, 2 & 3 Component and Piping Supports	28
4.0	4.0	Class 1 Program	1 thru 14
4.0	4.0	Class 2 Program	15 thru 34
4.0	4.0	Class 3 Program	35 thru 37
4.0	4.0	Class 1, 2 & 3 Component and Piping Support Program	38 thru 41
4.0	Attachment A	Summary of Relief Requests	1 thru 4
4.0	Attachment A	Relief Requests RR 3-1 thru RR 3-27	Each Relief Individually paged
5.0	5.0	Class 1 Component Surveillance Schedule	1 thru 101
5.0	5.0	Class 2 Component Surveillance Schedule	1 thru 72
5.0	5.0	Class 3 Component Surveillance Schedule	1 thru 13
5.0	5.0	Class 1, 2 &3 Supports Surveillance Schedule	1 thru 37
6.0	6.0	Isometric Sketches	162 Sketches

INTRODUCTION AND BACKGROUND

INTRODUCTION

The Indian Point Unit No. 3 Nuclear Power Plant's Weld and Support Inservice Inspection (ISI) Plan is prepared for the Third Ten-Year Inspection Interval from July 21, 2000 thru July 20, 2009. The IWE-IWL Containment Inspection Program is a separate Program, not included herein.

The Weld and Support ISI Plan encompasses the Indian Point Unit No. 3 ISI Class 1, 2, 3 and Augmented Inspections for Components, Piping and Supports which are identified by the System Boundaries (Table 3.0). This ISI plan is developed by giving due consideration to the following documents and applicable relief requests (Table 4.0).

1.0 Code of Federal Regulations 10CFR50.55a

2.0 ASME Boiler and Pressure Vessel Code Section V - 1989 Edition

3.0 ASME Boiler and Pressure Vessel Code Section XI - 1989 Edition no Addenda

4.0 ASME Boiler and Pressure Vessel Code Section XI - 1974 Edition thru Summer 1975 Addenda

5.0 United States Nuclear Regulatory Commission Regulatory Guides

- 5.1 Regulatory Guide 1.16 Rev. 4
- 5.2 Regulatory Guide 1.26 Rev. 3
- 5.3 Regulatory Guide 1.83 Rev. 1
- 5.4 Regulatory Guide 1.147 Rev. 12
- 5.5 Regulatory Guide 1.150 Rev. 1

6.0 Indian Point Unit No. 3 FSAR

7.0 Indian Point Unit No. 3 Technical Specification

8.0 Indian Point Unit No. 3 Preservice Inspection Plan

9.0 Indian Point Unit No. 3 3rd Ten-Year Inservice Inspection Plan

This plan outlines the ISI requirements for the Indian Point Unit No. 3 Third Ten-Year Interval, which started July 21, 2000 and ends July 20, 2009. This interval will be divided into three periods of three years, four years, and three years respectively. The ISI Class 1, Class 2 and Class 3 Components, Piping and their Supports will meet the standards in the ASME Boiler and Pressure Vessel Code Section XI, 1989 Edition, no Addenda . . .. Except for specific NRC approved Relief Requests and approved ASME Boiler and Pressure Vessel Code Cases (as published in the latest revision of Reg. Guide 1.147). The following Code Cases are currently in use at IP3:

- N-416-1
- N-435-1
- N-481
- N-491-1
- N-509
- N-521
- N-524
- Other Code Cases as approved in Reg. Guide 1.147 latest revision

Due to United States Regulatory Commission Implementation, Optional Owner Upgrades, Plant Modifications, re-verification of existing components, piping and supports, this Inservice Inspection Program is subject to change. Changes will be effected by Relief Requests or document revisions. The Indian Point Unit No. 3 Inservice Inspection Program will be updated as required to reflect changes as previously noted.

In certain cases, strict compliance with ASME Boiler and Pressure Vessel Code Section XI - 1989 Edition, no Addenda have been determined to be impractical for Indian Point Unit No. 3. It is stated in 10CFR50.55a(g)(5)(iii) that:

"If the licensee has determined that conformance with certain code requirements is impractical for its facility, the licensee shall notify the Commission and submit, as specified in 50.4, information to support the determinations"

Relief from the examination requirements of ASME Boiler and Pressure Vessel Code Section XI - 1989 Edition, no Addenda for ISI Class 1, Class 2 and Class 3 components, piping and supports at Indian Point Unit No. 3 are discussed and referenced in Tables 4 and 5. Relief from the examination requirements is requested based upon the justification and alternative examination methods provided.

The Inservice Inspection Program has been developed from an engineering review of the systems, components and supports at Indian Point Unit No. 3. When examinations cannot be performed to the requirements of the ASME Section XI Code, as allowed by provisions in 10 CFR 50.55a, request for relief with justifications and applicable proposed alternatives will be submitted for NRC approval. Applicable changes shall be incorporated into the next revision of the Inservice Inspection Program.

The following items that are to be examined under ASME Boiler and Pressure Vessel Code Section XI - 1989 Edition, no Addenda and are not included in this plan will be controlled and covered under the Indian Point Unit No. 3 Technical Specifications or applicable NYPA procedures.

1.0 Steam Generator Tubing IWB-2500-1 Category B-Q Item No. B16.20 are to be examined by eddy current in accordance with the requirements of Technical Specification Section 4.9, per Section XI - Subarticle IWB-2413.

2.0 Pressure Tests are scheduled and controlled under specific Indian Point Unit No. 3 procedures. Reports of test results will be included in each Inservice Inspection Summary Report.

3.0 Performance Testing of Snubbers - will be scheduled and controlled under specific Indian Point Unit No. 3 procedures and technical specifications in accordance with OM-4 requirements.

4.0 Inservice Inspection of Components Supports - IWF-2500-1, VT-3 examinations will be scheduled and controlled under specific Indian Point Unit No. 3 procedures or approved vendor procedures.

5.0 Inservice Testing of Pumps and Valves - Subsections IWP and IWV will be scheduled and controlled under specific Indian Point Unit No. 3 Pump and Valve Testing Program.

6.0 Repairs, modifications, replacements and alterations to pressure retaining components will be made in accordance with ASME Boiler and Pressure Vessel Code Section XI - 1989 Edition, no Addenda Subsections IWA-4000, IWB-4000, IWC-4000, IWD-4000, IWF-4000, IWA-7000, IWB-7000, IWC-7000, IWD-7000, and IWF-7000, as applicable.

BACKGROUND

The Preservice Inspection (completed 1976) and First 3 1/3 year Inservice Inspection Period (August 1976 thru December 1979) were conducted in accordance with ASME Boiler and Pressure Vessel Code Section XI - January 1970 and to the requirements of Indian Point Unit No. 3 Technical Specification 4.2.1.

The Second and Third periods of the 1st Ten-Year Inservice Inspection Plan (January 1980 thru August 1987) were conducted in accordance with ASME Boiler and Pressure Vessel Code Section XI - 1974 Edition thru Summer 1975 Addenda.

The 2nd Ten Year Inservice Inspection Plan (August 30, 1986 thru July 20, 2000) was conducted in accordance with ASME Boiler and Pressure Vessel Code Section XI - 1983 Edition thru and including Summer 1983 Addenda.

CALIBRATION BLOCKS

Calibration blocks for the Third Ten-Year Inservice Inspection Program will be those used during the 1st Ten-Year Interval – 2nd and 3rd Periods and the 2nd Ten-Year Interval.

Existing calibration blocks used during the 1st Ten-Year Interval - 2nd and 3rd periods were reviewed by Westinghouse NSID in August 1987 to compare to those recommended by ASME Boiler and Pressure Vessel Code Section V and XI - 1983 Edition thru Summer 1983 Addenda. Calibration blocks that deviated from the intent of Section V and XI - 1983 Edition thru Summer 1983 Addenda were recommended to be replaced by Indian Point No. 3. Additional calibration blocks were supplied as required.

> Reference Westinghouse Nuclear Services Integration Division -- Inspection Services Report: Indian Point Unit No. 3 Calibration Blocks for Inservice Examination -- August 1987.
>
> Calibration block INT-44 was modified in August 1998 to meet the near surface requirements of US Nuclear Regulatory Commission Guide 1.150.

Calibration blocks for the Third Ten-Year Inservice Inspection Program will meet the requirements of ASME Boiler and Pressure Vessel Code Section V and XI - 1989 Edition, and Performance Demonstration Initiative.

ADMINISTRATIVE CONTROL

1.0 The Indian Point Unit No. 3 Inservice Inspection Program 3rd Ten Year Interval, July 21, 2000 through July 20, 2009 as required by ASME Boiler and Pressure Vessel Code Section XI-1989 Edition, no Addenda as required for ISI Class 1,2 and 3 Components. Class 1 Piping Welds are being selected for examination in accordance with the ASME Boiler and Pressure Vessel Code Section XI -1974 Edition with Addenda through Summer 1975. This 3rd Ten Year Interval Program has been reviewed by:

- New York Power Authority
- Westinghouse Nuclear Services Division , WesDyne International
- Authorized Nuclear Inservice Inspection Agency – FM Insurance Company

2.0 The status of this 3rd Ten-Year Inspection Program is to be maintained in an updated condition. This program shall be revised, if required, following the performance of each on-site examinations to reflect any changes to scope, methods or procedures found necessary.

3.0 New York Power Authority shall be responsible for any changes to the plant installed condition due to maintenance, repair or replacement or of any changes in program scope or applicability due to changes in commitments to USNRC.

4.0 New York Power Authority shall be responsible for supplying the Authorized Inspection Agency for all ASME Boiler and Pressure Vessel Code Section XI - 1989 Edition, no Addenda examinations.

5.0 All items to be examined during a given period are to be scheduled for completion by the end of the applicable period. An OWNER'S ACTIVITY REPORT FORM OAR-1 shall be prepared and certified upon completion of each refueling outage. Each Form OAR-1 prepared during an inspection period shall be submitted following the end of the inspection period. of the Inservice Inspection, with Enforcement and Regulatory Authority having jurisdiction at the plant , reference Code Case N-532 (Relief Request No. 3-7 submitted herewith and pending approval).

6.0 New York Power Authority shall be responsible for supplying the Authorized Inspection Agency for all ASME Boiler and Pressure Vessel Code Section XI - 1989 Edition, no Addenda, REPAIR/REPLACEMENT CERTIFICATION RECORD, FORM NIS-2A as required by Code Case N-532 (pending approval of Relief Request No. 3-7).

SYSTEM BOUNDARIES

1.0 Inservice Inspection for the 3rd Interval of ISI Class 1, 2 and 3 Components, Piping and Supports for Indian Point Unit No. 3 are required to meet the standards in ASME Boiler and Pressure Vessel Code Section XI, 1989 Edition, no Addenda with the exception of Table IWB-2500-1 and Table IWB-2600 Category B-J, which will meet the selection criteria identified in ASME Boiler and Pressure Vessel Code Section XI, 1974 Edition thru Summer 1975 Addenda, (25% of Circumferential Joints and 25% of Pipe Branch Connection Joints).

1.1 Class 1 Components and Piping have been scheduled for examination in accordance with the Inspection Program outlined in Paragraphs IWB-2412 (Inspection Program B), IWB-2420 and IWB-2430. Table 4.0 presents the summary of these examinations for the Third Ten-Year Interval.

1.2 Class 2 Components and Piping have been scheduled for examination in accordance with the Inspection Program outlined in IWC-2412, IWC-2420, IWC-2430. Table 4.0 presents the summary of these examinations for the Third Ten-Year Interval

1.3 Class 3 Components and Piping have been scheduled for examination in accordance with the Inspection Program outlined in IWD-2412, Table IWD-2412-1. Table 4.0 presents the summary of these examinations for the Third Ten-Year Interval.

1.4 Class 1, 2 and 3 Component Supports have been scheduled for examination in accordance with the Inspection Program outlined in IWF-2400. Table 4.0 presents the summary of these examinations for the Second Ten-Year Interval.

2.0 ISI Class 1, 2 and 3 System Boundaries for Indian Point Unit No. 3, Third Ten-Year Interval are identified on the following drawings:

SYSTEM	DRAWING NUMBER
FLOW DIAGRAM MAIN STEAM	ISI-20173
FLOW DIAGRAM CONDENSATE & BOILER FEED PUMP SUCTION	ISI-20183
FLOW DIAGRAM BOILER FEEDWATER	ISI-20193
FLOW DIAGRAM CONDENSER AIR REMOVAL & WATER BOX PRIMING	ISI-20253
FLOW DIAGRAM SERVICE WATER SYSTEM	ISI-20333
FLOW DIAGRAM STATION AIR	ISI-20353
FLOW DIAGRAM INSTRUMENT AIR	ISI-20363
FLOW DIAGRAM MAIN STEAM TRAPS SHEET NO. 1	ISI-20413
FLOW DIAG., CONT. HYDROGEN CONCENTRATION MEASMT. & POST ACCIDENT CONT. VENTING SYS.	ISI-26533
FLOW DIAGRAM WASTE DISPOSAL SYSTEM SHEET NO. 1 – CONTAINMENT	ISI-27193, SH. 1
FLOW DIAGRAM WASTE DISPOSAL SYSTEM SHEET NO. 2 – PAB	ISI-27193, SH. 2
FLOW DIAGRAM AUXILIARY COOLANT SYSTEM INSIDE CONTAINMENT SHEET NO. 1	ISI-27203
FLOW DIAGRAM SERVICE WATER SYSTEM NUCLEAR STEAM SUPPLY PLANT	ISI-27223
FLOW DIAGRAM NITROGEN TO NUCLEAR EQUIPMENT	ISI-27233
FLOW DIAGRAM PRIMARY MAKE-UP WATER SYSTEM NUCLEAR STEAM SUPPLY PLANT	ISI-27243
FLOW DIAG. PENETRATION & LINER WELD JOINT CHANNEL PRESSURIZATION SYS.	ISI-27263
FLOW DIAGRAM STEAM GENERATOR BLOWDOWN SYSTEM	ISI-27293, SH. 1
FLOW DIAGRAM STEAM GENERATOR BLOWDOWN SYSTEM SAMPLE PANEL	ISI-27293, SH. 2
FLOW DIAGRAM SAFETY INJECTION SYSTEM SHEET NO. 1	ISI-27353
FLOW DIAGRAM CHEMICAL & VOLUME CONTROL SYSTEM SHEET NO. 1	ISI-27363
FLOW DIAGRAM REACTOR COOLANT SYSTEM SHEET NO. 1	ISI-27383
FLOW DIAGRAM SAMPLING SYSTEM	ISI-27453
FLOW DIAGRAM ISOLATION VALVE SEAL WATER SYSTEM	ISI-27463
FLOW DIAGRAM REACTOR COOLANT SYSTEM SHEET NO. 2	ISI-27473
FLOW DIAGRAM SAFETY INJECTION SYSTEM SHEET NO. 2	ISI-27503
FLOW DIAGRAM AUXILIARY COOLANT SYSTEM PAB & FSB SHEET NO. 1	ISI-27513, SH. 1
FLOW DIAGRAM AUXILIARY COOLANT SYSTEM IN PAB & FSB SHEET NO. 2	ISI-27513, SH. 2
FLOW DIAG. VENT . SYS. FOR CONTAINMENT, PRIMARY AUX. & FUEL STORAGE BLDGS.	ISI-40223
RADIATION MONITORING INSTALLATION DETAILS INSTRUMENTATION	ISI-70453

CLASS 1 COMPONENTS AND PIPING

3.0 Class 1 Components and Piping, with the exception of Category B-J, pressure-retaining welds in piping, have been scheduled in accordance with the regular Inspection Program outlined in ASME Boiler and Pressure Vessel Code Section XI, 1989 Edition, no Addenda, Paragraphs IWB-2412, IWB-2420 and IWB-2430. Because the application for a construction permit for the Indian Point Unit No. 3 Nuclear Power Plant was ". . . . . docketed prior to July 1, 1978, the extent of examination for Code Class 1 pipe welds may be determined by the requirements of Tables IWB-2500 and IWB-2600 Category B-J of ASME Boiler and Pressure Vessel Code Section XI, 1974 Edition thru Summer 1975 Addenda . . ." per 10 CFR 55a(b) (2) (ii). With the exception of items covered under Category B-J, the extent of examination for all Class 1 Components was determined by the requirements of Table IWB-2500-1 of the ASME Boiler and Pressure Vessel Code Section XI, 1989 Edition, no Addenda. Table 4.0 lists and quantifies these requirements. Acceptance standards for flaw indications, repair procedures, system pressure tests and replacements are defined in Paragraphs IWB-3000, IWB-4000, IWB-5000 and IWB-7000, respectively.

Sections 4.1 and 4.2 is a listing of Class 1 Components and Piping to be examined and Section 4.3 is a listing of those Class 1 Components and Piping which have been exempted from examination under the provisions of ASME Boiler and Pressure Vessel Code Section XI, 1989 Edition, no Addenda.

The Class 1 Components and Piping requiring examination at the Indian Point Unit No. 3 Nuclear Power Plant are:

3.1 Reactor Vessel
3.2 Pressurizer
3.3 Steam Generators, 31, 32, 33 and 34
3.4 Piping Pressure Boundary
3.5 Reactor Coolant Pumps 31, 32, 33 and 34
3.6 Valve Pressure Boundary

Refer to Section 4.2.6 for augmented examinations to be performed at Indian Point Unit No. 3 in excess of ASME Boiler and Pressure Vessel Code Section XI, 1989 Edition, no Addenda requirements.

4.0 Class 1 System Boundaries

The System listed below includes those Class 1 Systems which have been included in the Indian Point Unit No. 3 Inservice Inspection program.

System	New York Power Authority Drawing No.
Flow Diagram Reactor Coolant System Sheet No. 1	ISI-27383
Flow Diagram Reactor Coolant System Sheet No. 2	ISI-27473
Flow Diagram Auxiliary Coolant System Inside Containment Sheet No. 1	ISI-27203
Flow Diagram Safety Injection System Sheet No. 1	ISI-27353
Flow Diagram Chemical and Volume Control System Sheet No. 1	ISI-27363
Flow Diagram Sampling System	ISI-27453

4.1 Class 1 Components, which require Volumetric, Surface or Visual examination, are:

4.1.1 Reactor Vessel
4.1.2 Pressurizer
4.1.3 Steam Generators 31, 32, 33 and 34
4.1.4 Reactor Coolant Pumps 31, 32, 33 and 34

4.2 Class 1 Piping Pressure Boundary

Portions of the Piping Systems in the Reactor Coolant System, Auxiliary Coolant System, Safety Injection System, Chemical and Volume Control System and Sampling System are Class 1. Class 1 Piping Pressure Boundaries, which require Volumetric, Surface or Visual examination under Category B-J, are:

4.2.1 Loop 31

4.2.1.1 Reactor Coolant Pipe
4.2.1.2 10" Accumulator Discharge Line 351 to Check Valve 895A
4.2.1.3 6" RHR Line 355 to Check Valve 838A
4.2.1.4 2" SIS Line 56A to Check Valve 857A
4.2.1.5 10" Plocap to 2" SIS Line 843 to Check Valve 857P
4.2.1.6 3" Letdown Line 79 and 2" Drain Line 81 to Valve LCV460 and Valve 508B

4.2.1.7	3"RTD Line 775 to Cap and 2" RTD Line 775 to Cap
4.2.1.8	3" Charging Line 96 to Check Valve 210B
4.2.1.9	2" & 1 1/2" SIS Coldleg Line 753 to Check Valve 857L
4.2.1.10	2" & 1 1/2" Seal Injection Line 41 to Check Valve 251J

4.2.2 Loop 32

4.2.2.1	Reactor Coolant Pipe
4.2.2.2	14" RHR Line 10 to Valve 730
4.2.2.3	10" Accumulator Discharge Line 352 to Check Valve 895B
4.2.2.4	6" RHR Line 356 to Check Valve 838B
4.2.2.5	2" SIS Line 845 to Check Valve 857S
4.2.2.6	10" Plocap
4.2.2.7	3" RTD Line 777 to Cap and 2" RTD Line 777 to Cap
4.2.2.8	3" Charging Line 80 to Check Valve 210A
4.2.2.9	2" and 1 1/2" SIS Line 16A to Check Valve 857K
4.2.2.10	2" & 1 1/2" Seal Injection Line 42 to Check Valve 251K
4.2.2.11	2" Drain Line 82 to Valve 505B

4.2.3 Loop 33

4.2.3.1	Reactor Coolant Pipe
4.2.3.2	10" Accumulator Discharge Line 353 to Check Valve 895C
4.2.3.3	6" RHR Line 358 to Check Valve 838C
4.2.3.4	2" SIS Line 844 to Check Valve 857Q
4.2.3.5	10" Plocap to 2" SIS Line 56 to Check Valve 857H
4.2.3.6	3" RTD Line 788 to Cap and 2" RTD Line 788 to Cap
4.2.3.7	2" & 1 1/2" SIS Line 754 to Check Valve 857M
4.2.3.8	2" & 1 1/2" Seal Injection Line 43 to Check Valve 251L
4.2.3.9	2" Drain Line 83 to Valve 511B

4.2.4 Loop 34

4.2.4.1	Reactor Coolant Pipe
4.2.4.2	10" Accumulator Discharge Line 350 to Check Valve 895D
4.2.4.3	6" RHR Line 361 to Check Valve 838D
4.2.4.4	2" SIS Line 846 to Check Valve 857U
4.2.4.5	10" Plocap
4.2.4.6	3" RTD Line 790 to Cap and 2" RTD Line 790 to Cap
4.2.4.7	2" & 1 1/2" SIS Line 16 to Check Valve 857J
4.2.4.8	2" & 1 1/2" Seal Injection Line 44 to Check Valve 251M
4.2.4.9	2" Drain Line 84 to Valve 515B

4.2.5 Pressurizer

4.2.5.1	14" Pressurizer Surge Line 63
4.2.5.2	6" Pressurizer Safety Line 342 to Valve PCV 464
4.2.5.3	6" Pressurizer Safety Line 343 to Valve PCV 466
4.2.5.4	6" Pressurizer Safety line 344 to Valve PCV 468
4.2.5.5	4" & 3" Pressurizer Spray Line 61 and Line 62
4.2.5.6	4" & 3" Pressurizer Relief Line 70 to Valves PCV 455C and PCV 456
4.2.5.7	2" Auxiliary Spray Line 64 to Valve 212

4.2.6 Augmented Examinations

4.2.6.1 Reactor Vessel - United States Nuclear Regulatory Commission Regulatory Guide 1.150 Rev. 1

4.3 Class 1 Exempt Components and Piping

The following Class 1 Components and Piping or parts of components and piping for Indian Point Unit No. 3 are exempted from volumetric and surface examination by ASME Boiler and Pressure Vessel Code Section XI, 1989 Edition, no Addenda, Paragraph IWB-1220 according to the following criteria:

(a) Components that are connected to the reactor coolant system and part of the reactor coolant pressure boundary and that are of such a size and shape so that upon postulated rupture the resulting flow of coolant from the reactor coolant system under normal plant operating conditions is within the capacity of makeup systems which are operable from on-site emergency power.

(b) 1. Piping of 1-in. nominal pipe size and smaller, except for steam generator tubing

2. Components and their connections in piping of 1-in. nominal pipe size and smaller

(c) Reactor Vessel head connections and associated piping, 2 in., nominal pipe size and smaller, made inaccessible by control rod drive penetrations

Class 1 Components and Piping and supports exempted under these guidelines will be visually examined during system leakage and hydrostatic tests as required by Table IWB-2500-1 Category B-P, Item No. B15.10, B15.11, B15.20, B15.21, B15.30, B15.31, B15.50, B15.51, B15.60, B15.61, B15.70 and B15.71

4.3.1 Class 1 Piping and Components which are exempt from Volumetric and Surface examinations by IWB-1220(b) are:

4.3.1.1 Reactor Coolant System 3/4" Flow Temperature Lines to Valves 503, 506, 509, 513, 504A, 504B, 504C, 507A, 507B, 507C, 510A, 510B, 510C, 514A, 514B and 514C

4.3.1.2 Reactor Coolant System RTD Temperature Element Lines to TE & TW413A, TE & TW413B, TE & TW423A, TE & TW423B, TE & TW433A & TE TW433B, TW443A and TE & TW443B

4.3.1.3 Reactor Coolant System 1" Sampling Line 59A to Valve 955A and 1" Sampling Line 59 to Valve 955B

4.3.1.4 Reactor Coolant System 1" Hotleg Take-Off lines to caps

4.3.1.5 Reactor Coolant System 3/8" Line 447 to Valve 540

4.3.1.6 Reactor Coolant System 3/4" Line to Valve 512

4.3.1.7 Reactor Vessel 3/4" Line 522 to Valve 657

4.3.1.8 Reactor Vessel 3/4" Line 340 and Line 445 to Valves 502 and 501

4.3.1.9 Excess Letdown 1" Line 97 to Valve 213B

4.3.1.10 Reactor Vessel 1" Line 3031 to Valves RCS-SOV-653 and RCS-SOV-655

4.3.1.11 Pressurizer 3/4" Lines to Valves 527, 531, 532, 533, 534, 537, 538, 574A, 574B, 574C, RC-524, RC-525, RC593 and RC596

4.3.1.12 Pressurizer Sampling System 3/4" Lines 25 and 26 to Valves 951 and 953

4.3.1.13 Safety Injection System 3/4" Lines to Valves 110, 112, 113, 119, 120, 123, 124, 130, 139, 153, 156, 157, 159, 160 and 163

4.3.1.14 Safety Injection System 3/4" Line 31 to Valve 839H, Line 605 to Valve 839D, Line 606 to Valve 839F and Line 607 to Valve 839B

4.3.1.15 Reactor Coolant Pump 3/4" Seal Bypass to Flow Orifices Lines 75, 76, 77 & 78

4.3.1.16 Reactor Coolant Pump 3/4" Lines to Valves 141, 143, 144, 145, 252A, 253A, 254A, 255A, 260A, 252B, 253B, 254B, 255B, 260B, 252C, 253C, 254C, 255C, 260C, 252D, 253D, 254D, 255D and 260D.

4.4 Reactor Coolant Pump Flywheels

4.4.1 There are a total of 5 RCP flywheels (1 each Pump and 1 spare). Although not required by ASME Boiler and Pressure Vessel Code Section XI, the flywheel will be examined under the Preventive Maintenance Program each time a RCP motor is removed and sent out for refurbishment. The New York Power Authority is not committed to US NRC Regulatory Guide 1.14 at Indian Point Unit 3.

CLASS 2 COMPONENTS AND PIPING

5.0 Class 2 Components and Piping, have been scheduled in accordance with the Inspection Program B outlined in ASME Boiler and Pressure Vessel Code Section XI, 1989 Edition, no Addenda, Paragraphs IWC-2412, IWC-2420, IWC-2430 and IWC-2500. Welds selected for the Third Ten-Year Interval include welds examined during the 1st Ten-Year Interval - 2nd and 3rd periods, the Second Ten-Year Interval, and additional welds as determined by Engineering. Table 4.0 lists and quantifies these requirements. Acceptance standards for flaw indications, repair procedures, system pressure tests and replacements are defined in IWC-3000, IWC-4000 (rules of IWA-4000 apply), IWC-5000 and IWC-7000, respectively.

The Class 2 Components and Piping requiring examination at the Indian Point Unit No. 3 Nuclear Power Plant are:

5.1 Steam Generators 31, 32, 33 & 34
5.2 Residual Heat Exchangers 31 & 32
5.3 Regenerative Heat Exchanger
5.4 Seal Water Heat Exchanger
5.5 Non-Regenerative Letdown Heat Exchanger
5.6 Excess Letdown Heat Exchanger
5.7 Seal Water Injection Filters 31 & 32
5.8 Piping Pressure Boundary
5.9 Residual Heat Removal Pumps 31 & 32
5.10 Safety Injection Pumps 31, 32 & 33
5.11 Charging Pumps 31, 32 & 33
5.12 Valve Pressure Boundary

Refer to Section 6.2.21 and 6.2.22 for augmented examinations to be performed at Indian Point Unit No. 3 in excess of ASME Boiler and Pressure Vessel Code Section XI, 1989 Edition, no Addenda.

6.0 Class 2 System Boundaries

The Systems listed below include those Class 2 Systems, which have been included in the Indian Point Unit No. 3 Inservice Inspection Program.

System	New York Power Authority Drawing No.
Flow Diagram Reactor Coolant System Sheet No. 1	ISI-27383
Flow Diagram Reactor Coolant System Sheet No. 2	ISI-27473
Flow Diagram Auxiliary Coolant System Inside Containment Sheet No. 1	ISI-27203
Flow Diagram Auxiliary Coolant System PAB & FSB Sheet No. 1	ISI-27513, SH. 1
Flow Diagram Auxiliary Coolant System Sheet No. 2	ISI-27513, SH. 2
Flow Diagram Chemical and Volume Control System Sheet No. 1	ISI-27363
Flow Diagram Safety Injection System Sheet No. 1	ISI-27353
Flow Diagram Safety Injection System Sheet No. 2	ISI-27503
Flow Diagram Main Steam	ISI-20173

System	New York Power Authority Drawing No.
Flow Diagram Steam Generator Blowdown System	ISI-27293, SH. 1
Flow Diagram Steam Generator Blowdown System	ISI-27293, SH. 2
Flow Diagram Boiler Feedwater	ISI-20193
Flow Diagram Sampling System	ISI-27453
Flow Diagram Isolation Valve Seal Water System	ISI-27463

6.1 Class 2 Components, which require volumetric, surface or visual examinations, are:

6.1.1 Steam Generators 31, 32, 33 and 34
6.1.2 Residual Heat Exchangers 31 & 32
6.1.3 Regenerative Heat Exchanger
6.1.4 Seal Water Heat Exchanger
6.1.5 Non-Regenerative Letdown Heat Exchanger
6.1.6 Excess Letdown Heat Exchanger
6.1.7 Seal Water Injection Filters 31 & 32
6.1.8 Residual Heat Removal Pumps 31 & 32
6.1.9 Safety Injection Pumps 31, 32 and 33

6.2 Class 2 Piping Pressure Boundary

Portions of the Piping Systems in the Reactor Coolant, Auxiliary Coolant, Safety Injection, Main Steam, Steam Generator Blowdown, Boiler Feedwater, Sampling and Isolation Valve Seal Water are Class 2. Class 2 Piping Pressure Boundaries, which require Volumetric, Surface or Visual examination under Category C-F, are:

6.2.1 Loop 31 Main Steam: 31" and 28" Line 2 from Steam Generator to Check Valve MS2-31; 12" & 8" Lines to Relief Valves MS45-1, MS46-1, MS47-1, MS48-1 and MS49-1; 12" Line to Cap and 12" & 6" Line 1020 to Safety Relief Valve PCV1134

6.2.2 Loop 32 Main Steam: 31" and 28" Line 1 from Steam Generator to Check Valve MS2-32; 12" & 8" Lines to Relief Valves MS45-2, MS46-2, MS47-2, MS48-2 and MS49-2; 12" Line to Cap and 12" and 6" Line 1018 to Safety Relief Valve PCV1135

6.2.3 Loop 33 Main Steam: 31" and 28" Line 3 from Steam Generator to Check Valve MS2-33; 12" & 8" Lines to Relief Valves MS45-3, MS46-3, MS47-3, MS48-3 and MS49-3; 12" Line to Cap and 12" and 6" Line 1022 to Safety Relief Valve PCV1136

6.2.4 Loop 34 Main Steam: 31" and 28" Line 4 from Steam Generator to Check Valve MS2-34; 12" and 8" Lines to Relief Valves MS45-4, MS46-4, MS47-4, MS48-4 and MS49-4; 12" Line to Cap and 12" and 6" Line 1024 to Safety Relief Valve PCV1137

6.2.5 Loop 31 18" Feedwater Line 6 to Check Valve BFD6-1

6.2.6 Loop 32 18" Feedwater Line 5 to Check Valve BFD6-2

6.2.7 Loop 33 18" Feedwater Line 7 to Check Valve BFD6-3

6.2.8 Loop 34 18" Feedwater Line 8 to Check Valve BFD6-4

6.2.9 14" RHR Line 10, 14" RHR Line 653, 14" RHR Line 57 and 12" RHR Line 155 from RHR Pump 31 and RHR Pump 32 to valves 882, 885B and 730

6.2.10 12" & 8" RHR Line 9 from RHR Heat Exchanger 31 to Valve 883; and 8" RHR Line 9 and 8" RHR Line 654 to RHR Pump 31 and RHR Pump 32 and 8" RHR Line 9 to RHR Heat Exchanger 32

6.2.11 10" & 8" RHR Line 293 from RHR Heat Exchanger 32 to Valve 1802A and Valve 1802B

6.2.12 8" RHR Line 93 from RHR Heat Exchanger 32 to Valve 889A; 8" RHR Line 94 from RHR Heat Exchanger 31 to Valve 889B and 6" RHR Line 89 from 8" RHR Line 93 and 8" RHR Line 94 to 8" RHR Line 60. 8" RHR Line 60 to Valve 888A and Valve 888B.

6.2.13 8" RHR Line 355 from 8" RHR Line 94 to 6" RHR Line 356 and 6" RHR Line 355 from 8" RHR Line 355 to Check Valve 838A

6.2.14 8" & 6" RHR Line 358 from 8" RHR Line 93 to Check Valve 838C

6.2.15 8" RHR Line 359 from 8" RHR Line 355 to 8" RHR Line 358

6.2.16 6" RHR Line 356 from 8" RHR Line 355 to Check Valve 838B

6.2.17 6" RHR Line 361 from 8" RHR Line 358 to Check Valve 838D

6.2.18 6" RHR Line 3042 from 14" RHR Line 10 to 6" x 3" Reducer

6.2.19 6" SIS Line 56 from 6" x 2" Reducer to 6" x 4" Reducer

6.2.20 6" SIS Line 550 from Boron Injection Tank (BIT) to 6" x 4" Reducing Elbow and 6" x 6" x 4" Reducing Tee. A modification to the Safety Injection System eliminated the need for storage of high boron concentration fluid in the Boron Injection Tank. The BIT is treated as piping and examinations will be performed on the associated inlet and outlet welds.

6.2.21 8" Containment Spray Line 51 from Spray Pump 31 to Valve 869A

6.2.22 8" Containment Spray Line 15 from Spray Pump 32 to Valve 869B

6.2.23 4" SIS Line 56 from Safety Injection Pump 31 to 6" x 4" Reducer

6.2.24 4" SIS Line 145 from Safety Injection Pump to 6" x 4" Reducer at 6" x 6" x 4" Reducing Tee and 4" Line 550

6.2.25 4" SIS Line 550 from Safety Injection Pump to 6" x 4" Reducing Elbow and 6" x 6" x 4" Reducing Tee

6.2.26 2" Line 16 from SI Valve 857J to SI Valve 856C

6.2.27 2" Line 16A from SI Valve 857K to SI Valve 856D

6.2.28 2" Line 56 from SI Valve 857H to 6" x 2" Reducer

6.2.29 2" Line 56A from SI Valve 857A to 6" Line 56

6.2.30 2" Line 594 from 4" Line 16 to Valve 1844

6.2.31 2" Line 753 from 2" x 1.5" Reducer to SI Valve 857L

6.2.32 2" Line 754 from 2" x 1.5" Reducer to SI Valve 857M

6.2.33 2" Line 844 from SI Valve 857Q to 6" Line 56 Header

6.2.34 2" Line 845 from SI Valve 857S to 3" Line 846

6.2.35 2" Line 846 from SI Valve 857U to 6" Line 56 Header

6.3 Class 2 Exempt Components

The following Class 2 components and piping or parts of components and piping for Indian Point Unit No. 3 are exempted from Volumetric, Surface, and Visual

examination by ASME Boiler and Pressure Vessel Code-Section XI, 1989 Edition, no Addenda, Paragraph IWC-1220 according to the following criteria:

(1) Components within Residual Heat Removal, Emergency Core Cooling, and Containment Heat Removal System:

(a) Vessels, piping, pumps, valves, and other components NPS 4" and smaller in all systems except High Pressure Safety Injection System.
(b) Vessels, piping, pumps, valves and other components NPS 1.5" and smaller in High Pressure Safety Injection System.
(c) Component connections NPS 4" and smaller (including nozzles, socket fittings, and other connections) in vessels, piping, pumps, valves, and other components of any size in all systems except High Pressure Safety Injection System.
(d) Component connections NPS 1.5" and smaller (including nozzles, socket fittings, and other connections) in vessels, piping, pumps, valves, and other components of any size in all systems except High Pressure Safety Injection System.
(e) Component Vessels, piping, pumps, valves, and other components, and component connections of any size in statically pressurized, passive (i.e., no pumps) Safety Injection Systems. For example, the Accumulator Tanks are now exempted based on this criteria.
(f) Piping and other components of any size beyond the last shut off valve in open-ended portions of systems that do not contain water during normal plant operating conditions.

(2) Components within systems or portions of systems other than Residual Heat Removal Systems, Emergency Core Cooling Systems, and Containment Heat Removal Systems:

(a) Vessels, piping, pumps, valves, and other components NPS 4" and smaller.
(b) Component connections NPS 4" and smaller (including nozzles, socket fittings, and other connections) in vessels, piping, pumps, valves, and other components of any size.
(c) Vessels, piping, pumps, valves, and other components, and component connections of any size in systems that operate (when the system function is required) at a pressure equal to or less than 275 psig and at a temperature equal to or less than 200°F. For example, the Volume Control Tank, Seal Water Heat Exchanger, Reactor Coolant Filter, and Seal Water Return Filter are now exempted based on this criteria.
(d) Piping and other components of any size beyond the last shut off valve in open-ended portions of systems that do not contain water during normal plant operating conditions.

(3) Concrete Encased Components

(a) Piping support members and piping support components that are encased in concrete.

6.4 Class 2 Piping and Components which are exempted from Volumetric and Surface examinations by IWC-1222 are:

6.4.1 Safety Injection System Sheet No. 1 Drawing No. ISI-27353

6.4.1.1 8" Containment Spray Line 93 from Valve 889A to Spray Header and 8" Containment Spray Line 94 from Valve 889B to Spray Header have an operating pressure of 210 psig and operating temperature of 140°F.

6.4.1.2 8" Containment Spray Line 15 from Valve 869B to Spray Header and 8" Containment Spray Line 51 from Valve 869A to Spray Header have an operating pressure of 210 psig and operating temperature of 68°F.

6.4.1.3 12", 10" and 8" Recirculation Spray Line 91 from Recirculation Pump 32 to Valve 1802B, and 12", 10" & 8" Recirculation Spray Line 293 from Recirculation Spray Pump 31 to Valve 1802A, and to 8" Line 91 have an operating Pressure of 150 psig, and operating temperature of less than 200°F.

6.4.1.4 Recirculation Spray Pumps 31 and 32 have an operating pressure of 150 psig and an operating temperature of less than 200°F.

6.4.2 Safety Injection System Sheet No. 2 Drawing No. ISI-27503

6.4.2.1 12" & 10" Line 181 from Refueling Water Storage Tank to Containment Spray Pump 32 has a operating pressure of less than 50-psig and operating temperature of less than 200°F.

6.4.2.2 10" Line 314 from 12" Line 181 to Containment Spray Pump 31 has an operating pressure of less than 50-psig and operating temperature of less than 200°F.

6.4.2.3 16", 14" and 12" Line 155 from Refueling Water Storage

Tank to Valve 882 has a operating pressure of less than 50-psig and operating temperature of less than 200°F.

6.4.2.4 8" Line 190 from 12" Line 155 to Valve 883 has an operating pressure of less than 150-psig and design temperature of 200°F.

6.4.2.5 8" Line 189 from 16" Line 155 to 6" Line 277 has a operating pressure of less than 150-psig and design temperature of 200°F.

6.4.2.6 8" Line 60 from Valves 888A and 888B to 6" Lines 60, 277 and 278 has a operating pressure of less than 150-psig and operating temperature of 200°F.

6.4.2.7 6" Line 60 from 8" Line 60 to Safety Injection Pump 33, 6" Line 277 from 8" Line 60 to Safety Injection Pump 32, and 6" Line 278 from 8" Line 60 to Safety Injection Pump 31 have a operating pressure of 150 psig and operating temperature of 200°F.

6.4.2.8 18" Line 57 from Containment Sump to Valve 885A has an operating pressure of less than 50-psig and operating temperature of less than 200°F.

6.4.2.9 6" Line 518 from 12" Line 155 to 6" Line 277 has a operating pressure of less than 150-psig and operating temperature of less than 200°F.

6.4.2.10 Refueling Water Storage Tank has an atmospheric operating pressure and operating temperature of 68°F.

6.4.2.11 Containment Spray Pumps 31 and 32 have an operating pressure of 210 psig and operating temperature of less than 140°F.

6.5 Class 2 Piping and Components which are exempted from Volumetric and Surface examinations by IWC-1220 are:

6.5.1 Reactor Coolant System Sheet No. 2 Drawing No. ISI-27473

6.5.1.1 All piping not identified in 6.2 and located on ISI-27473 is 4" nominal pipe size and smaller.

6.5.2 Chemical and Volume Control System Sheet No. 1 Drawing No. ISI-27363

6.5.2.1 All piping not identified in 6.2 and located on ISI-27363 is 4" nominal pipe size and smaller.

6.5.3 Auxiliary Coolant System Sheet No. 1 Drawing No. ISI-27203

6.5.3.1 All piping not identified in 6.2 and located on ISI-27203 is 4" nominal pipe size and smaller.

6.5.4 Auxiliary Coolant System Sheet No. 2 Drawing No. ISI-27513

6.5.4.1 All piping not identified in 6.2 and located on ISI-27513 is 4" nominal pipe size and smaller.

6.5.5 Safety Inspection System Sheet No. 1 Drawing No. ISI-27353

6.5.5.1 All piping not identified in 6.2 or 6.4 and located on ISI-27353 is 4" nominal pipe size and smaller.

6.5.6 Safety Inspection System Sheet No. 2 Drawing No. ISI-27503

6.5.6.1 All piping not identified in 6.2 or 6.4 and located on ISI-27503 is 4" nominal pipe size and smaller.

6.5.7 Main Steam Drawing No. ISI-20173

6.5.7.1 All piping not identified in 6.2 and located on ISI-20173 is 4" nominal pipe size and smaller.

6.5.8 Steam Generator Blowdown System Drawing No. ISI-27293

6.5.8.1 All piping located on ISI-27293 is 4" nominal pipe size and smaller.

6.5.9 Boiler Feedwater Drawing No. ISI-20193

6.5.9.1 All piping not identified in 6.2 and located on ISI-20193 is 4" nominal pipe size and smaller.

6.5.10 Sampling System Drawing No. ISI-27453

6.5.10.1 All piping located on ISI-27453 is 4" nominal pipe size and smaller.

6.5.11 Isolation Valve Seal Water System Drawing No. ISI-27463

6.5.11.1 All piping located on ISI-27463 is 4" nominal pipe size and smaller.

CLASS 3 COMPONENTS AND PIPING

7.0 Class 3 Components and Piping have been scheduled for examination in accordance with the regular Inservice Inspection Program outlined in ASME Boiler and Pressure Vessel Code Section XI, 1989 Edition, no Addenda, Paragraph IWD-2412. Acceptance standards for flaw indications, repair procedures, system pressure tests and replacements are defined in IWD-3000 and IWD-4000 (in course of preparation, rules of IWB-3000 may be used), IWD-5000 and IWD-7000, respectively.

Sections 8.1 and 8.2 are a listing of Class 3 Components and Piping to be examined, and Section 8.3 is a listing of those Class 3 components and piping which have been exempted from examination under the provisions of ASME Boiler and Pressure Vessel Code Section XI, 1989 Edition, no Addenda.

The Class 3 Components and Piping requiring examination at the Indian Point Unit No. 3 Nuclear Power Plant are:

7.1 Systems in Support of Reactor Vessel Shutdown Function

7.2 Systems in Support of Emergency Core Cooling, Containment Heat Removal, Atmosphere Cleanup and Reactor Residual Heat Removal

7.3 Systems in Support of Residual Heat Removal from Spent Fuel Storage Pool

Refer to Section 8.5 for augmented examinations to be performed at Indian Point Unit No. 3 in excess of ASME Boiler and Pressure Vessel Code Section XI, 1989 Edition, no Addenda.

8.0 Class 3 System Boundaries

The Systems below include those Class 3 Systems, which have been included in the Indian Point Unit 3 Inservice Inspection Program.

System	New York Power Authority Drawing No.
Flow Diagram Auxiliary Coolant System Inside Containment Sheet No. 1	ISI-27203
Flow Diagram Auxiliary Coolant System PAB & FSB Sheet No. 1	ISI-27513, SH. 1
Flow Diagram Auxiliary Coolant System in PAB & FSB Sheet No. 2	ISI-27513, SH. 2
Flow Diagram Safety Injection System Sheet No. 2	ISI-27503
Flow Diagram Chemical & Volume Control System Sheet No. 1	ISI-27363
Flow Diagram Main Steam	ISI-20173
Flow Diagram Steam Generator Blowdown System	ISI-27293, SH. 1
Flow Diagram Steam Generator Blowdown System Sample Panel	ISI-27293, SH. 2
Flow Diagram Boiler Feedwater	ISI-20193
Flow Diagram Isolation Valve Seal Water System	ISI-27463
Flow Diagram Service Water System Nuclear Steam Supply Plant	ISI-27223
Flow Diagram Condensate and Boiler Feed Pump Suction	ISI-20183
Flow Diagram Waste Disposal System Sheet No. 1 - Containment	ISI-27193
Flow Diagram Waste Disposal System Sheet No. 2 - PAB	ISI-27193, SH. 2

8.1 Class 3 Components, which require visual examination of supports, are:

8.1.1 Residual Heat Exchangers 31 & 32

8.1.2 Spend Fuel Pool Heat Exchanger 31

8.1.3 Component Cooling Heat Exchanger 31 & 32

8.1.4 Component Cooling Surge Tanks 31 & 32

8.1.5 Residual Heat Removal Pumps 31 & 32 Seal Heat Exchangers

8.1.6 Auxiliary Component Cooling Pumps 31, 32, 33 and 34

8.1.7 Safety Injection Pumps 31, 32 and 33 Oil Coolers

8.1.8 Component Cooling Pumps 31, 32 and 33

8.1.9 Reactor Coolant Pumps 31, 32, 33 and 34 Lube Oil Coolers

8.1.10 Recirculation Spray Pumps 31 and 32 Motor Coolers

8.1.11 Spray Additive Tank 31

8.1.12 Auxiliary Feedwater Turbine Driven Pump 32

8.1.13 Auxiliary Feedwater Motor Driven Pumps 31 & 33

8.1.14 Nuclear Service Water Pumps 34, 35 and 36

8.1.15 Nuclear Service Water Pumps 34, 35 and 36 Strainers

8.1.16 Conventional Service Water Pumps 31, 32 and 33

8.1.17 Conventional Service Water Pumps 31, 32 and 33 Strainers

8.1.18 Diesel Generators 31, 32 and 33 Jacket Water Coolers

8.1.19 Diesel Generators 31, 32 and 33 Lube Oil Coolers

8.1.20 Cooling Water Heat Exchangers 31 and 32

8.1.21 Recirculation Fan Coolers 31, 32, 33, 34 and 35

8.1.22 Condensate Storage Tank

8.1.23 Spent Fuel Pit Pumps 31 and 32

8.1.24 Spent Fuel Pit Strainer

8.1.25 Non-Regenerative Letdown Heat Exchanger 31

8.1.26 Seal Water Heat Exchanger 31

8.1.27 Excess Letdown Heat Exchanger 31

8.1.28 Charging Pumps 31, 32 and 33 Fluid Drive Coolers

8.1.29 Boric Acid Tanks 31 & 32

8.1.30 Boric Acid Filter 31

8.1.31 Boric Acid Blender

8.1.32 Boric Acid Transfer Pumps 31 & 32

8.2 Class 3 Piping Pressure Boundary

Portions of the Piping Systems in the Auxiliary Coolant, Safety Injection, Main Steam, Boiler Feedwater, Isolation Valve Seal Water System, Service Water System and Condensate and Boiler Feed Pump Suction are Class 3. Class 3 Piping Pressure Boundaries, which require Visual examination of supports under Categories D-A, D-B and D-C are:

8.2.1 14" Service Water Lines 1081, 1082 and 1083 from Conventional Service Water Pumps 31, 32 and 33 to 24" Service Water Line 409

8.2.2 24" Service Water Line 409 from 14" Service Water Lines 1081, 1082 and 1083 to 8" Valve SWN4, Valve SWN100-4, 20" Line 407 and 18" Line 409

8.2.3 10" Service Water Line 1221 from 24" Line 409 to Valve SWN-7

8.2.4 16" Service Water Line 1219 from 24" Line 409 to Valve SWN112

8.2.5 14" Service Water Lines 1084, 1085 and 1086 from Nuclear Service Water Pumps 34, 35 and 36 to 24" Service Water Line 408

8.2.6 24" Service Water Line 408 from 14" Lines 1084, 1085 and 1086 to 8" Valve SWN-5, Valve SWN100-3, 20" Line 411 and 18" Line 408

8.2.7 10" Service Water Line 1222 from 24" Line 408 to Valve SWN-6

8.2.8 16" Service Water Line 1220 from 24" Line 408 to Valve SWN-111

8.2.9 18" Service Water Line 408 from 24" Line 408 to 10" Service Water Lines 11A, 11B, 11C and 14" Line 408

8.2.10 14" Service Water Line 408 to 10" Service Water Lines 11D and 11E

8.2.11 10" Service Water Line 11E from 14" Line 408 to Recirculation Fan 35

8.2.12 10" Service Water Line 11D from 14" Line 408 to Recirculation Fan 32

8.2.13 10" Service Water Line 11A from 18" Line 408 to Recirculation Fan 31

8.2.14 10" Service Water Line 11B from 18" Line 408 to Recirculation Fan 33

8.2.15 10" Service Water Line 11C from 18" Line 408 to Recirculation Fan 34

8.2.16 20" Service Water Line 411 from 24" Line 408 to Component Cooling Water Heat Exchanger 31 and Valve SWN33-1

8.2.17 20" Service Water Line 407 from 24" Line 409 to Valve SWN33-1 and 18" Service Water Line 407

8.2.18 18" Service Water Line 407 to Component Cooling Water Heat Exchanger 32

8.2.19 18" Service Water Line 409 from 24" Line 409 to 18" Line 408

8.2.20 24" & 18" Service Water Lines 405 & 509 from Component Cooling Heat Exchangers 31 and 32 to 24" Service Water Line 405

8.2.21 24" Service Water Line 405 to Discharge Canal and 14" Line 410 Vent

8.2.22 10" Service Water Line 12B from Recirculation Fan 31 to 18" Line 406

8.2.23 10" Service Water Line 12D from Recirculation Fan 32 to 14" Line 406

8.2.24 10" Service Water Line 12A from Recirculation Fan 33 to 18" Line 406

8.2.25 10" Service Water Line 12C from Recirculation Fan 34 to 18" Line 406

8.2.26 10" Service Water Line 12E from Recirculation Fan 35 to 14" Line 406

8.2.27 18" & 14" Service Water Line 406 from 10" Lines 12A, 12B, 12C, 12D and 12E to 18" Line 408, 10" & 8" Line 408 and 24" Line 405

8.2.28 18" Line 408 to 18" Line 406

8.2.29 6" Service Water Lines 1096, 1097 and 1098 from Diesel Generator Jacket Water Coolers 31, 32 and 33 (6" x 4" Red.) to 10" Line 1096

8.2.30 6" Steam Generator Blowdown Line 390 from 24" Line 405 to Valve SWN-53

8.2.31 10" Service Water Line 1096 to 24" Service Water Line 405

8.2.32 6" Service Water Line 1301 from 24" Line 409 to 6" x 4" Red.

8.2.33 6" Service Water Line 1303 from 24" Line 409 to Valve SWN137

8.2.34 6" Service Water Lines 1093 and 1099 from Diesel Generator 31 Lube Oil Cooler (6" x 4" Red.) to 10" Service Water Lines 1093 and 1099

8.2.35 6" Service Water Lines 1094 and 1100 from Diesel Generator 32 Lube Oil Cooler (6" x 4" Red.) to 10" Service Water Lines 1093 and 1099

8.2.36 6" Service Water Lines 1095 and 1101 from Diesel Generator 33 Lube Oil Cooler (6" x 4" Red.) to 10" Service Water Line 1093 and 1099

8.2.37 10" Service Water Lines 1099 from 6" Lines 1099, 1100 and 1101 to 24" Line 408

8.2.38 10" Service Water Line 1093 from 6" Lines 1093, 1094 and 1095 to 24" Line 409

8.2.39 14" Component Cooling Water Line 53 from Component Cooling Water Heat Exchanger 32 to 16" Component Cooling Water Line 53A

8.2.40 16" Component Cooling Water Line 53A to 12" Line 53A to Valve 766C and 10" Line 148 and 14" Line 53A

8.2.41 10" Component Cooling Water Line 148 from 16" Line 53A to 6" Line 148 and Non-Regenerative Letdown Heat Exchanger 31 and to 8" Line 515

8.2.42 8" Component Cooling Water Line 515 from 10" Line 148 to 6" Line 515 to 6" Cap

8.2.43 14" Component Cooling Water Line 53A from 16" Line 53A to 12" Line 53A to Residual Heat Exchanger 32

8.2.44 6" Component Cooling Water Line 13 from 14" Line 53A to 6" x 4" Reducer

8.2.45 16" & 14" Component Cooling Water Line 53 from Component Cooling Water Heat Exchanger 31 to 8" Line 167 and 14" Line 53

8.2.46 8" Component Cooling Water Line 167 from 16" Line 53 to 6" Line 167 to 6" Cap

8.2.47 14" Component Cooling Water Line 53 from 16" Line 53 to 12" Line 53 to Residual Heat Exchanger 31

8.2.48 12" Component Cooling Water Line 52A from Component Cooling Pumps 32 and 33 to 16" Line 52A and 12" Line 52

8.2.49 12" Component Cooling Water Line 52 from Component Cooling Water Pump 31 to 16" Line 52A

8.2.50 16" Component Cooling Water Line 52 from 16" Line 52A to 14" Line 52 and 8" Line 168

8.2.51 16" Component Cooling Water Line 52A from 12" Line 52A to 14" Line 52A and 10" Line 149

8.2.52 14" Component Cooling Water Line 52A from 16" Line 52A to 12" Line 52A to Residual Heat Exchanger 32

8.2.53 14" Component Cooling Water Line 52 from 16" Line 52 to 12" Line 52 to Residual Heat Exchanger 31

8.2.54 8" Component Cooling Water Line 168 from 16" Line 52 to 6" Line 168 to 6" Cap

8.2.55 10" Component Cooling Water Line 149 from 16" Line 52A to 6" Line 149 and Non-Regenerative Letdown Heat Exchanger 31 and to 8" Line 516

8.2.56 8" Component Cooling Water Line 516 from 6" Line 149 to 6" Line 516 and 6" Cap

8.2.57 10" Component Cooling Water Line 199 from Component Cooling Pump 31 to 14" Line 211

8.2.58 10" Component Cooling Water Line 209 from Component Cooling Pump 32 to 14" Line 211

8.2.59 10" Component Cooling Water Line 211 from Component Cooling Pump 33 to 14" Line 211

8.2.60 14" Component Cooling Water Line 211 from 10" Lines 199, 209 and 211 to 14" Line 199 and Component Cooling Heat Exchanger 32

8.2.61 14" Component Cooling Water Line 199 from 14" Line 211 to Component Cooling Heat Exchanger 31

8.2.62 8" Component Cooling Water Line 325 from Spent Fuel Pit Heat Exchanger 31 to 14" Line 52

8.2.63 8" Component Cooling Water Line 326 from Spent Fuel Pit Heat Exchanger 31 to 14" Line 53

8.2.64 6" Component Cooling Water Line 14 from 14" Line 52A to 6" x 4" Reducer

8.2.65 10" Spent Fuel Pit Line 329 from Spent Fuel Pit Pumps 31 and 32 to Spent Fuel Pit

8.2.66 8" Spent Fuel Pit Line 327 from Spent Fuel Pit Pumps 31 & 32 to Spent Fuel Pit Heat Exchanger 31 and 8" Cap

8.2.67 8" Spent Fuel Pit Line 328 from Spent Fuel Pit Heat Exchanger 31 to Spent Fuel Pit, 8" Cap and 8" x 3" Reducer

8.2.68 12" Auxiliary Feed Pump Line 1017 from Turbine Driven Auxiliary Feed Pump 32 to Vent

8.2.69 10" & 6" Auxiliary Feed Pump 32 Turbine Driven Line 1016 from 4" Valve 52 to Vent

8.2.70 8" Auxiliary Feed Pump Line 1071 from Turbine Driven Auxiliary Feed Pump 32 to 8" Line 1076 and Valve CT28 and 12" Line 1070

8.2.71 12" Auxiliary Feed Pump Line 1070 from 8" Line 1071 to Valve LCV 1158 and Condensate Storage Tank

8.2.72 6" Auxiliary Feed Pump Line 1072 from Motor Driven Auxiliary Feedwater Pump 33 to 6" Line 1074 and Valve CT31 and to 8" Line 1071

8.2.73 6" Auxiliary Feed Pump Line 1073 from Motor Driven Auxiliary Feedwater Pump 31 to 6" Line 1075 and Valve CT25 and to 8" Line 1071

8.2.74 6" Auxiliary Feed Pump Line 1005 from Turbine Driven Auxiliary Feed Pump 32 to 6" Cap

8.2.75 4" & 3" Auxiliary Feedwater Line 1001 from Valve 70 to Motor Driven Auxiliary Feedwater Pump 33 and to 3" Line 1007

8.2.76 3" Auxiliary Feedwater Line 1007 from 4" Line 1001 to 6" Line 1005

8.2.77 4" & 3" Auxiliary Feedwater Line 1002 from Valve 69 to 4" Line 1001 and 3" Line 1008

8.2.78 3" Auxiliary Feedwater Line 1008 from 4" Line 1002 to 6" Line 1005

8.2.79 4" & 3" Auxiliary Feedwater Line 1003 from Valve 68 to Motor Driven Auxiliary Feedwater Pump 31 and 3" Line 1005

8.2.80 3" Auxiliary Feedwater Line 1005 from 4" Line 1003 to 6" Line 1005

8.2.81 4" & 3" Auxiliary Feedwater Line 1004 from Valve 67 to 4" Line 1003 and 3" Line 1006

8.2.82 3" Auxiliary Feedwater Line 1006 from 4" Line 1004 to 6" Line 1005

8.3 Class 3 Exempt Components

The following Class 3 Components and Piping or parts of Components and Piping for Indian Point Unit No. 3 are exempt from Visual examination of Supports by ASME Boiler and Pressure Vessel Code Section XI, 1989 Edition, no Addenda Paragraph IWD-1220 according to the following criteria:

IWD-1220.1 Integral attachments of supports and restraints to components that are 4 in. nominal pipe size and smaller within the system boundaries of Examination Categories D-A, D-B and D-C of Table IWD-2500-1 shall be exempt from the Visual examination VT-3, except for PWR Auxiliary Feedwater Systems.

IWD-1220.2 Integral attachments of supports and restraints to components exceeding 4-in. nominal pipe size may be exempted from the Visual examination VT-3 of Table IWD-2500-1 provided:

(a) the components are located in systems (or portions of systems) whose function is not required in support of reactor residual heat removal, containment heat removal and emergency core cooling; and

(b) the components operate at a pressure of 275 psig or less and at a temperature of 200°F or less.

8.4 Class 3 piping exempted from Visual examinations of Supports by IWD-1220.1 are:

8.4.1 Auxiliary Coolant System Sheet No. 1 Drawing No. ISI-27203

8.4.1.1 All piping not identified in Paragraph 8.2 and located on ISI-27203is 4-in. nominal pipe size and smaller.

8.4.2 Auxiliary Coolant System Sheet No. 2 Drawing No. ISI-27513

8.4.2.1 All piping not identified in Paragraph 8.2 and located on ISI-27513 is 4-in. nominal pipe size and smaller.

8.4.3 Safety Injection System Sheet No. 2 Drawing No. ISI-27503

8.4.3.1 All piping located on ISI-27503 are 4 in. nominal pipe size and smaller.

8.4.4 Chemical & Volume Control System Sheet No. 1 Drawing No. ISI-27363

8.4.4.1 All piping located on ISI-27363 are 4 in. nominal pipe size and smaller.

8.4.5 Main Steam Drawing No. ISI-20173

8.4.5.1 All piping not identified in Paragraph 8.2 and located on ISI-20173 is 4-in. nominal pipe size and smaller.

8.4.6 Steam Generator Blowdown System Drawing No. ISI-27293

8.4.6.1 All piping not identified in Paragraph 8.2 and located on ISI-27293 is 4-in. nominal pipe size and smaller.

8.4.7 Boiler Feedwater Drawing No. ISI-20193

8.4.7.1 All piping not identified in Paragraph 8.2 and located on

ISI-20193 is 4-in. nominal pipe size and smaller.

8.4.8 Isolation Valve Seal Water System Drawing No. ISI-27463

8.4.8.1 All piping located on ISI-27463 are 4 in. nominal pipe size and smaller.

8.4.9 Service Water System Nuclear Steam Supply Plant Drawing No. ISI-27223

8.4.9.1 All piping not identified in Paragraph 8.2 and located on ISI-27223 is 4-in. nominal pipe size and smaller.

8.4.10 Condensate and Boiler Feed Pump Suction Drawing No. ISI-20183

8.4.10.1 All piping not identified in Paragraph 8.2 and located on ISI-20183 is 4-in. nominal pipe size and smaller.

8.4.11 Waste Disposal System Sheet No. 1 Drawing No. ISI-27193

8.4.11.1 All piping located on ISI-27193 is 4 in. nominal pipe size and smaller.

SERVICE WATER SYSTEM, CLASS 3A PORTION:

8.5 The Service Water System piping portion which penetrates the Containment has been reclassified as ISI Class 3A (from Class 3, refer to ISI drawings for boundaries). This classification upgrade means that for Repair and Replacement activities, the rules of ISI Class 3 and Generic Letter GL 90-05 shall apply. However, for ISI inspection the Class 3A items will be included into the Augmented Examination Category and are included under the scope of NRC GL 89-13. It is further determined that since the primary damage mechanism is crevice corrosion and erosion in the weld areas, these examinations will be performed under the Generic Letter 89-13 program with volumetric techniques. The current techniques used are radiography and ultrasonic examination. These techniques may change in the future if new inspection technology is developed. Examination results and any repairs, if applicable, will be included with the ISI outage report summary. There are a total of 43 Class 3A welds in the Service Water System. Under the GL 89-13 Program, 3 welds in R09 (1997) and 12 Welds in R10 (1999) were inspected.

CLASS 1, 2 AND 3 COMPONENT AND PIPING SUPPORTS

9.0 Class 1, 2 and 3 Component and Piping Supports have been scheduled for examination in accordance with the regular Inservice Inspection Program outlined in ASME Boiler and Pressure Vessel Code Section XI, 1989 Edition, no Addenda, Paragraph IWF-1200. Acceptance standards for examination evaluations, repair procedures, inservice test requirements, and replacements are defined in Paragraphs IWF-3000, IWF-4000, IWF-5000 and IWF-7000, respectively.

Class 1, 2 and 3 System requiring visual examinations of Component and Piping Supports at the Indian Point Unit No. 3 Nuclear Power Plant are:

9.1 Class 1 Reference Section 4.1 and 4.2

9.2 Class 2 Reference Section 6.1 and 6.2

9.3 Class 3 Reference Section 8.1 and 8.2

ASME Boiler and Pressure Vessel Code Section XI, 1989 Edition, no Addenda, Paragraph IWF-1230 "Supports Exempt from Examination and Test" is in the course of preparation, Exemptions listed are based on exempt components for IWB-2500-1, IWC-2500-1 and IWD-2500-1.

Class 1, 2 and 3 Systems which are exempt from Visual examinations of Component and Piping Supports at the Indian Point Unit No. 3 Nuclear Power Plant are:

9.4 Class 1 Reference Section 4.3.1

9.5 Class 2 Reference Section 6.4 and 6.5

9.6 Class 3 Reference Section 8.4

Note: Code Case N-491-1 is used for the selection of component supports for inspection (i.e., 25% for Class 1, 15% for Class 2, and 10% for Class 3).

NEW YORK POWER AUTHORITY
INDIAN POIN UNIT NO.3
INSERVIVE INSPECTION PROGRAM
3rd INTERVAL, JULY 21, 2000 THRU JULY 20, 2009

TABLE No. 4 REVISION 0

SECTION XI EDITION: 1989 EDITION, NO ADDENDA
COMPONENT: **REACTOR VESSEL RCPCR-V1**
CODE CLASS 1
CODE TABLE IWB-2500-1

ITEM NO.	EXAM. CAT.	COMPONENT IDENTIFICATION	METHOD OF EXAMINATION	EXTENT OF EXAMINATION 1st PERIOD	2nd PERIOD	3rd PERIOD	REMARKS
B1.10	B-A	Shell Welds					
B1.11	B-A	Circumferential Shell Welds (3)	Volumetric			3 Welds	
B1.12	B-A	Longitudinal Shell Welds (9)	Volumetric			9 Welds	
B1.20	B-A	Head Welds					
B1.21	B-A	Circumferential (2)	Volumetric	1 Weld		1 Weld	Relief Request 3-12 Submitted
B1.22	B-A	Meridional Welds (12)	Volumetric	6 Welds		6 Welds	Relief Request 3-12 Submitted
B1.30	B-A	Shell to Flange Weld (1)	Volumetric			1 Weld	Relief Request 3-19 Submitted
B1.40		Head to Flange Weld (1)	Surface and Volumetric	1 Weld			
B1.50	B-A	Repair Welds					
B1-51	B-A	Repair Welds in Beltline Region	Not Applicable				No Repair Welds IP3-RPT-RV-03236
B3.90	B-D	Nozzle to Vessel Welds (8)	Volumetric			8 Welds	Code Case N-521 Applies
B3.100	B-D	Nozzle Inner Radius Section (8)	Volumetric			8 Welds	Code Case N-521 Applies
B4.10	B-E	Partial Penetration Welds	Not Applicable				

TABLE No. 4 REVISION 0

SECTION XI EDITION: 1989 EDITION, NO ADDENDA
COMPONENT: REACTOR VESSEL RCPCR-V1
CODE CLASS 1
CODE TABLE IWB-2500-1

ITEM NO.	EXAM. CAT.	COMPONENT IDENTIFICATION	METHOD OF EXAMINATION	EXTENT OF EXAMINATION 1st PERIOD	2nd PERIOD	3rd PERIOD	REMARKS
B4.12	B-E	Control Rod Drive Nozzles (78)	Visual VT-2			20 Nozzles	25%
B4.13	B-E	Instrumentation Nozzles (58)	Visual VT-2			15 Nozzles	25%
B5.10	B-F	NPS 4 or Larger Nozzle-to-Safe End Butt Welds	Volumetric			8 Nozzles	Relief Request 3-18 Submitted and Code Case N-521 Applies
B5.20	B-F	Less Than NPS 4 Nozzle-to-Safe End Butt Welds	Not Applicable				
B5.30	B-F	Nozzle-to-Safe End Socket Welds	Not Applicable				
B6.10	B-G-1	Closure Head Nuts	Surface	18 Nuts	18 Nuts	18 Nuts	
B6.20	B-G-1	Closure Studs, in place	Not Applicable				
B6.30	B-G-1	Closure Studs, when removed	Surface and Volumetric	18 Studs	18 Studs	18 Studs	
B6.40	B-G-1	Threads in Flange	Volumetric			54	See Note Below
B6.50	B-G-1	Closure Washers	Visual, VT-1	18 Washers	18 Washers	18 Washers	
B7.10	B-G-2	Bolts, Studs, and Nuts	Not Applicable				

Note: Deferral of the Inspection is permissible except when the detected leakage of borated water requires a visual VT-1 in accordance with IWA-5250(a)(2)

NEW YORK POWER AUTHORITY
INDIAN POIN UNIT NO.3
INSERVIVE INSPECTION PROGRAM
3rd INTERVAL, JULY 21, 2000 THRU JULY 20, 2009

TABLE No. 4 REVISION 0

SECTION XI EDITION: 1989 EDITION, NO ADDENDA
COMPONENT: **REACTOR VESSEL RCPCR-V1**
CODE CLASS 1
CODE TABLE IWB-2500-1

ITEM NO.	EXAM. CAT.	COMPONENT IDENTIFICATION	METHOD OF EXAMINATION	EXTENT OF EXAMINATION 1st PERIOD	2nd PERIOD	3rd PERIOD	REMARKS
B7.80	B-G-2	CRD Housings, Bolts, Studs, and Nuts	Visual, VT-1	1 Articulator	2 Articulators	2 Articulators	When disassembled
B8.10	B-H	Integrally Welded Attachments	Not Applicable				
B13.10	B-N-1	Vessel Interior	Visual, VT-3	Accessible Areas	Accessible Areas	Accessible Areas	
B13.50	B-N-2	Interior Attachments Within Beltline Region	Not Applicable				
B13.60	B-N-2	Interior Attachments Beyond Beltline Region	Visual, VT-3			Accessible Areas	
B13.70	B-N-2	Core Support Structure	Visual, VT-3			Accessible Areas	
B14.10	B-O	Welds in CRD Housing (34)	Surface			4 Welds	10% Peripheral
B15.10	B-P	Pressure Retaining Boundary Leakage	Visual, VT-2	Each Refueling Outage	Each Refueling Outage	Each Refueling Outage	
B15.11	B-P	Pressure Retaining Boundary Hydrostatic	Visual, VT-2			One Test Per Interval	Code Case N-498-1 Applies

NEW YORK POWER AUTHORITY
INDIAN POIN UNIT NO.3
INSERVIVE INSPECTION PROGRAM
3rd INTERVAL, JULY 21, 2000 THRU JULY 20, 2009

TABLE No. 4 REVISION 0

SECTION XI EDITION: 1989 EDITION, NO ADDENDA
COMPONENT: **PRESSURIZER RCPCPR1**
CODE CLASS 1
CODE TABLE IWB-2500-1

ITEM NO.	EXAM. CAT.	COMPONENT IDENTIFICATION	METHOD OF EXAMINATION	EXTENT OF EXAMINATION 1st PERIOD	2nd PERIOD	3rd PERIOD	REMARKS
B2.10	B-B	Shell-to-Head Welds					
B2.11	B-B	Circumferential (1)	Volumetric		1 Weld		
B2.11	B-B	Circumferential (1)	Visual, VT-2	Each Refueling Outage	Each Refueling Outage	Each Refueling Outage	Inaccessible, Relief Request 3-14 Submitted
B2.12	B-B	Longitudinal (1)	Volumetric		1 Weld, 12"		
B2.12	B-B	Longitudinal (1)	Visual, VT-2	Each Refueling Outage	Each Refueling Outage	Each Refueling Outage	Inaccessible, Relief Request 3-14 Submitted
B2.20	B-B	Head Welds					
B2.21	B-B	Circumferential	Not Applicable				
B2.22	B-B	Longitudinal	Not Applicable				
B3.110	B-D	Nozzle to Vessel Welds	Not Applicable				
B3.120	B-D	Nozzle Inside Radius Section (6)	Visual, VT-2	Each Refueling Outage	Each Refueling Outage	Each Refueling Outage	Relief Request 3-16 Submitted
B4.20	B-E	Heater Penetration Welds (78)	Visual, VT-2			78 Welds	
B5.40	B-F	NPS 4 or Larger Nozzle-to-Safe End Butt Welds (6)	Volumetric and Surface	2 Welds	2 Welds	2 Welds	
B5.50	B-F	Less Than NPS 4 Nozzle-to-Safe End Butt Welds	Not Applicable				

NEW YORK POWER AUTHORITY
INDIAN POIN UNIT NO.3
INSERVIVE INSPECTION PROGRAM
3rd INTERVAL, JULY 21, 2000 THRU JULY 20, 2009

TABLE No. 4 REVISION 0

SECTION XI EDITION: 1989 EDITION, NO ADDENDA
COMPONENT: **PRESSURIZER RCPCPR1**
CODE CLASS 1
CODE TABLE IWB-2500-1

ITEM NO.	EXAM. CAT.	COMPONENT IDENTIFICATION	METHOD OF EXAMINATION	EXTENT OF EXAMINATION 1st PERIOD	2nd PERIOD	3rd PERIOD	REMARKS
B5.60	B-F	Nozzle-to-Safe End Socket Welds	Not Applicable				
B6.60	B-G-1	Bolts and Studs	Not Applicable				
B6.70	B-G-1	Flange Surface when Connection disassembled	Not Applicable				
B6.80	B-G-1	Nuts, Bushings, and Washers	Not Applicable				
B7.20	B-G-2	Bolts, Studs, and Nuts (16)	Visual, VT-1			16 Studs and Nuts	
B8.20	B-H	Integrally Welded Attachments (1)	Volumetric	1 Weld			
B15.20	B-P	Pressure Retaining Boundary Leakage	Visual, VT-2	Each Refueling Outage	Each Refueling Outage	Each Refueling Outage	
B15.21	B-P	Pressure Retaining Boundary Hydrostatic	Visual, VT-2			One Test Per Interval	Code Case N-498-1 Applies

NEW YORK POWER AUTHORITY
INDIAN POIN UNIT NO.3
INSERVIVE INSPECTION PROGRAM
3rd INTERVAL, JULY 21, 2000 THRU JULY 20, 2009

TABLE No. 4 REVISION 0

SECTION XI EDITION: 1989 EDITION, NO ADDENDA
COMPONENT: **REPLACEMENT STEAM GENERATORS RCPCSG1-31, RCPCSG2-32, RCPCSG3-33, and RCPCSG4-34**
CODE CLASS 1
CODE TABLE IWB-2500-1

ITEM NO.	EXAM. CAT.	COMPONENT IDENTIFICATION	METHOD OF EXAMINATION	EXTENT OF EXAMINATION 1st PERIOD	2nd PERIOD	3rd PERIOD	REMARKS
B2.30	B-B	Head Welds					
B2.31	B-B	Circumferential	Not Applicable				
B2.32	B-B	Meridional	Not Applicable				
B2.40	B-B	Tubesheet-to-Head Weld (4)	Volumetric		1 Weld		
B3.130	B-D	Nozzle-toVessel Welds	Not Applicable				
B3.140	B-D	Nozzle Inside Radius Section (8)	Volumetric	3 Nozzles	2 Nozzles	3 Nozzles	
B5.70	B-F	NPS 4 or Larger Nozzle-to-Safe End Butt Welds (8)	Volumetric and Surface	4 Nozzles	4 Nozzles		
B5.80	B-F	Less Than NPS 4 Nozzle-to-Safe End Butt Welds	Not Applicable				
B5.90	B-F	Nozzle-to-Safe End Socket Welds	Not Applicable				
B6.90	B-G-1	Bolts and Studs	Not Applicable				
B6.100	B-G-1	Flange Surface when Connection disassembled	Not Applicable				
B6.110	B-G-1	Nuts, Bushings, and Washers	Not Applicable				

NEW YORK POWER AUTHORITY
INDIAN POIN UNIT NO.3
INSERVIVE INSPECTION PROGRAM
3rd INTERVAL, JULY 21, 2000 THRU JULY 20, 2009

TABLE No. 4 REVISION 0

SECTION XI EDITION: 1989 EDITION, NO ADDENDA
COMPONENT: REPLACEMENT STEAM GENERATORS RCPCSG1-31, RCPCSG2-32, RCPCSG3-33, and RCPCSG4-34
CODE CLASS 1
CODE TABLE IWB-2500-1

ITEM NO.	EXAM. CAT.	COMPONENT IDENTIFICATION	METHOD OF EXAMINATION	EXTENT OF EXAMINATION 1st PERIOD	2nd PERIOD	3rd PERIOD	REMARKS
B7.30	B-G-2	Bolts, Studs, and Nuts 32 Studs, 32 Nuts, and 64 Washers each Steam Generator	Visual, VT-1		32 Studs, 32 Nuts, and 64 Washers		31 Stem Generator Hotleg and Coldleg Manway Bolting
B8.30	B-H	Integrally Welded Attachments (1)	Not Applicable				
B15.30	B-P	Pressure Retaining Boundary Leakage	Visual, VT-2	Each Refueling Outage	Each Refueling Outage	Each Refueling Outage	
B15.31	B-P	Pressure Retaining Boundary Hydrostatic	Visual, VT-2			One Test Per Interval	Code Case N-498-1 Applies

NEW YORK POWER AUTHORITY
INDIAN POIN UNIT NO.3
INSERVIVE INSPECTION PROGRAM
3rd INTERVAL, JULY 21, 2000 THRU JULY 20, 2009

TABLE No. 4 REVISION 0

SECTION XI EDITION: 1989 EDITION, NO ADDENDA
COMPONENT: HEAT EXCHANGERS
CODE CLASS 1
CODE TABLE IWB-2500-1

ITEM NO.	EXAM. CAT.	COMPONENT IDENTIFICATION	METHOD OF EXAMINATION	EXTENT OF EXAMINATION 1st PERIOD	2nd PERIOD	3rd PERIOD	REMARKS*
B2.50	B-B	Head Welds					
B2.51	B-B	Circumferential	Not Applicable				
B2.52	B-B	Meridional	Not Applicable				
B2.60	B-B	Tubesheet-to-Head Weld (4)	Not Applicable				
B2.70	B-B	Longitudinal Welds	Not Applicable				
B3.150	B-D	Nozzle-toVessel Welds	Not Applicable				
B3.160	B-D	Nozzle Inside Radius Section (8)	Volumetric				
B5.100	B-F	NPS 4 or Larger Nozzle-to-Safe End Butt Welds (8)	Not Applicable				
B5.110	B-F	Less Than NPS 4 Nozzle-to-Safe End Butt Welds	Not Applicable				
B5.120	B-F	Nozzle-to-Safe End Socket Welds	Not Applicable				
B6.120	B-G-1	Bolts and Studs	Not Applicable				
B6.130	B-G-1	Flange Surface when Connection disassembled	Not Applicable				
B6.140	B-G-1	Nuts, Bushings, and Washers	Not Applicable				
B7.40	B-G-2	Bolts, Studs, and Nuts	Not Applicable				

* No other Class 1 Heat Exchangers except the Replacement Steam Generators at IP3

TABLE No. 4

REVISION 0

SECTION XI EDITION: 1989 EDITION, NO ADDENDA
COMPONENT: HEAT EXCHANGERS
CODE CLASS 1
CODE TABLE IWB-2500-1

ITEM NO.	EXAM. CAT.	COMPONENT IDENTIFICATION	METHOD OF EXAMINATION	EXTENT OF EXAMINATION 1st PERIOD	2nd PERIOD	3rd PERIOD	REMARKS
B8.40	B-H	Integrally Welded Attachments (1)	Not Applicable				
B15.40	B-P	Pressure Retaining Boundary Leakage	Not Applicable				
B15.41	B-P	Pressure Retaining Boundary Hydrostatic	Not Applicable				

TABLE No. 4

REVISION 0

SECTION XI EDITION: 1989 EDITION, NO ADDENDA
COMPONENT: PIPING
CODE CLASS 1
CODE TABLE IWB-2500-1

ITEM NO.	EXAM. CAT.	COMPONENT IDENTIFICATION	METHOD OF EXAMINATION	EXTENT OF EXAMINATION 1st PERIOD	2nd PERIOD	3rd PERIOD	REMARKS
B5.130	B-F	NPS 4 or Larger Dissimilar Metal Butt Welds	Not Applicable				
B5.140	B-F	Less Than NPS 4 Nozzle-to-Safe End Butt Welds	Not Applicable				
B5.150	B-F	Nozzle-to-Safe End Socket Welds	Not Applicable				
B6.150	B-G-1	Bolts and Studs	Not Applicable				
B6.160	B-G-1	Flange Surface when Connection disassembled	Not Applicable				
B6.170	B-G-1	Nuts, Bushings, and Washers	Not Applicable				
B7.50	B-G-2	Bolts, Studs, and Nuts (7 Flanges)	Visual, VT-1	1 Flange	1 Flange		
B9.10 B9.11	B-J B-J	NPS 4 or Larger Circumferential Welds (170)	Surface and Volumetric	16 Welds	14 Welds	15 Welds	
B9.12	B-J	Longitudinal Welds (16)	Surface and Volumetric				Code Case N-524 Applies
B9.20 B9.21	B-J B-J	Less Than NPS 4 Circumferential Welds (85)	Surface	8 Welds	7 Welds	8 Welds	
B9.22	B-J	Longitudinal Welds	Not Applicable				

NEW YORK POWER AUTHORITY
INDIAN POIN UNIT NO.3
INSERVIVE INSPECTION PROGRAM
3rd INTERVAL, JULY 21, 2000 THRU JULY 20, 2009

TABLE No. 4 REVISION 0

SECTION XI EDITION: 1989 EDITION, NO ADDENDA
COMPONENT: PIPING
CODE CLASS 1
CODE TABLE IWB-2500-1

ITEM NO.	EXAM. CAT.	COMPONENT IDENTIFICATION	METHOD OF EXAMINATION	EXTENT OF EXAMINATION 1st PERIOD	2nd PERIOD	3rd PERIOD	REMARKS
B9.30	B-J	Branch Pipe Connections					
B9.31	B-J	NPS 4 or Larger (10)	Surface and Volumetric	1 Branch Connection	2 Branch Connections		
B9.32	B-J	Less Than NPS 4 (27)	Surface	2 Branch Connections	2 Branch Connections	3 Branch Connections	
B9.40	B-J	Socket Welds (317)	Surface	29 Welds	27 Welds	28 Welds	
B10.10	B-K-1	Integrally Welded Attachments (6)	Surface	1			Code Case N-509 Applies
B15.50	B-P	Pressure Retaining Boundary Leakage	Visual, VT-2	Each Refueling Outage	Each Refueling Outage	Each Refueling Outage	
B15.51	B-P	Pressure Retaining Boundary Hydrostatic	Visual, VT-2			One Test Per Interval	Code Case N-498-1 Applies

TABLE No. 4

REVISION 0

SECTION XI EDITION: 1989 EDITION, NO ADDENDA
COMPONENT: REACTOR COOLANT PUMPS RCPCP1-31, RCPCP2-32, RCPCP3-33 and RCPCP4-34
CODE CLASS 1
CODE TABLE IWB-2500-1

ITEM NO.	EXAM. CAT.	COMPONENT IDENTIFICATION	METHOD OF EXAMINATION	EXTENT OF EXAMINATION 1st PERIOD	2nd PERIOD	3rd PERIOD	REMARKS
B6.180	B-G-1	Bolts and Studs – 96 (24 Studs each Pump)	Volumetric		24 Studs		
B6.190	B-G-1	Flange Surface, when Connection Disassembled	Visual VT-1				
B6.200	B-G-1	Nuts, Bushings, and Washers – 96 (24 Nuts each Pump)	Visual VT-1		24 Nuts		
B7.60	B-G-2	Bolts, Studs, and Nuts – 72 (18 each Pump)	Visual VT-1	18 Studs and Nuts			
B10.20	B-K-1	Integrally Welded Attachments – 12 (3 each Pump)	Volumetric or Surface	3 Attachments			
B12.10	B-L-1	Pump Casing Welds – 12 (3 Welds each Pump)	Visual VT-1, External Surfaces			3 Welds	Code Case N 481-1 Applies
B12.20	B-L-2	Pump Casing – 4 (1 each Pump) if disassembled	Visual VT-3				Code Case N 481-1 Applies
B15.60	B-P	Pressure Retaining Boundary Leakage	Visual, VT-2	Each Refueling Outage	Each Refueling Outage	Each Refueling Outage	
B15.61	B-P	Pressure Retaining Boundary Hydrostatic	Visual, VT-2			One Test Per Interval	Code Case N-498-1 Applies

TABLE No. 4 REVISION 0

SECTION XI EDITION: 1989 EDITION, NO ADDENDA
COMPONENT: REACTOR COOLANT PUMPS RCPCP1-31, RCPCP2-32, RCPCP3-33 and RCPCP4-34
CODE CLASS 1 - AUGMENTED
CODE TABLE IWB-2500-1

ITEM NO.	EXAM. CAT.	COMPONENT IDENTIFICATION	METHOD OF EXAMINATION	EXTENT OF EXAMINATION 1st PERIOD	2nd PERIOD	3rd PERIOD	REMARKS
BRG1.14	R-G	Flywheel (5) 1 each Pump and 1 Spare	Surface and Volumetric	*	*	*	* See Note Below

Note: Examinations will be scheduled under the Preventive Maintenance Program when the Flywheel is sent out for refurbishment.
Not committed to US NRC Regulatory Guide 1.14

TABLE No. 4

REVISION 0

SECTION XI EDITION: 1989 EDITION, NO ADDENDA
COMPONENT: VALVES
CODE CLASS 1
CODE TABLE IWB-2500-1

ITEM NO.	EXAM. CAT.	COMPONENT IDENTIFICATION	METHOD OF EXAMINATION	EXTENT OF EXAMINATION 1st PERIOD	2nd PERIOD	3rd PERIOD	REMARKS
B6.210	B-G-1	Bolts and Studs	Not Applicable				
B6.220	B-G-1	Flange Surface when connection disassembled	Not Applicable				
B6.230	B-G-1	Nuts, Bushings, and Washers	Not Applicable				
B7.70	B-G-2	Bolts, Nuts, and Studs (30 valves)	Visual VT-1	3 Valves	3 Valves	2 Valves	
B10.30	B-K-1	Integrally Welded Attachments	Not Applicable				
B12.30	B-M-1	Valves Less Than NPS 4 Valve Body Welds	Not Applicable				
B12.50	B-M-2	Valve Body, Exceeding NPS 4 (17) Internal Surfaces	Visual VT-3				See Note at Bottom of Page
B15.70	B-P	Pressure Retaining Boundary Leakage	Visual, VT-2	Each Refueling Outage	Each Refueling Outage	Each Refueling Outage	
B15.71	B-P	Pressure Retaining Boundary Hydrostatic	Visual, VT-2			One Test Per Interval	Code Case N-498-1 Applies

Note: Examination is only required when valve is disassembled for maintenance, or repair. Examination of the internal pressure boundary shall be performed to the extent practicable. Examinations are limited to at least one valve within each group of valves that are the same size, constructional design (such as globe, gate, or check valves) and manufacturing method, and that perform similar functions in the system (such as containment isolation and system overpressure protection).

NEW YORK POWER AUTHORITY
INDIAN POIN UNIT NO.3
INSERVIVE INSPECTION PROGRAM
3rd INTERVAL, JULY 21, 2000 THRU JULY 20, 2009

TABLE No. 4 REVISION 0

SECTION XI EDITION: 1989 EDITION, NO ADDENDA
COMPONENT: Replacement Steam Generators RCPCSG1-31, RCPCSG2-32, RCPCSG3-33, and RCPCSG4-34
CODE CLASS 2
CODE TABLE IWC-2500-1

ITEM NO.	EXAM. CAT.	COMPONENT IDENTIFICATION	METHOD OF EXAMINATION	EXTENT OF EXAMINATION 1st PERIOD	2nd PERIOD	3rd PERIOD	REMARKS
C1.10	C-A	Shell Circumferential Welds (12) 3 each Steam Generator	Volumetric		3 Welds		
C1.20	C-A	Head Circumferential Welds (4) 1 each Steam Generator	Volumetric			1 Weld	
C1.30	C-A	Tubesheet-toShell Welds (4) 1 each Steam Generator	Volumetric		1 Weld		
C2.10	C-B	Nozzles in Vessels ≤ ½ in. Nominal Thickness					
C2.11	C-B	Nozzle to Shell (or Head) Welds	Not Applicable				
C2.20	C-B	Nozzles Without Reinforcing Plate In Vessels > ½ in. Nominal Thickness					
C2.21	C-B	Nozzle to Shell (or Head) Welds (8) 2 each Steam Generator	Surface and Volumetric		1 Weld	1 Weld	
C2.22	C-B	Nozzle Inside Radius Section (4) 1 each Steam Generator	Volumetric		1 Nozzle		Relief Request 3-23 Submitted

TABLE No. 4 REVISION 0

SECTION XI EDITION: 1989 EDITION, NO ADDENDA
COMPONENT: Replacement Steam Generators RCPCSG1-31, RCPCSG2-32, RCPCSG3-33, and RCPCSG4-34
CODE CLASS 2
CODE TABLE IWC-2500-1

ITEM NO.	EXAM. CAT.	COMPONENT IDENTIFICATION	METHOD OF EXAMINATION	EXTENT OF EXAMINATION 1st PERIOD	2nd PERIOD	3rd PERIOD	REMARKS
C2.30	C-B	Nozzles With Reinforcing Plate in Vessels > ½ in. Nominal Wall Thickness					
C2.31	C-B	Reinforcing Plate Welds to Nozzle and Vessel	Not Applicable				
C2.32	C-B	Nozzle-to-Shell (or Head) Welds When Inside of Vessel Is Accessible	Not Applicable				
C2.33	C-B	Nozzle-to-Shell (or Head) Welds When inside of Vessel Is Inaccessible	Not Applicable				
C3.10	C-C	Integrally Welded Attachments	Not Applicable				
C4.10	C-D	Bolts and Studs	Not Applicable				
C7.10	C-H	Pressure Retaining Boundary Leakage	Visual, VT-2	Each Inspection Period	Each Inspection Period	Each Inspection Period	
C7.20	C-H	Pressure Retaining Boundary Hydrostatic	Visual, VT-2			One Test Per Interval	Code Case N-498-1 Applies

TABLE No. 4

REVISION 0

SECTION XI EDITION: 1989 EDITION, NO ADDENDA
COMPONENT: Regenerative Heat Exchanger CSAHRG1-31
CODE CLASS 2
CODE TABLE IWC-2500-1

ITEM NO.	EXAM. CAT.	COMPONENT IDENTIFICATION	METHOD OF EXAMINATION	EXTENT OF EXAMINATION 1st PERIOD	2nd PERIOD	3rd PERIOD	REMARKS
C1.10	C-A	Shell Circumferential Welds	Not Applicable				
C1.20	C-A	Head Circumferential Welds (6)	Volumetric			2 Welds	
C1.30	C-A	Tubesheet-toShell Welds (6)	Volumetric			2 Welds	Relief Request 3-22 Submitted
C2.10	C-B	Nozzles in Vessels ≤ ½ in. Nominal Thickness					
C2.11	C-B	Nozzle to Shell (or Head) Welds	Not Applicable				
C2.20	C-B	Nozzles Without Reinforcing Plate In Vessels > ½ in. Nominal Thickness					
C2.21	C-B	Nozzle to Shell (or Head) Welds	Not Applicable				
C2.22	C-B	Nozzle Inside Radius Section	Not Applicable				

TABLE No. 4

REVISION 0

SECTION XI EDITION: 1989 EDITION, NO ADDENDA
COMPONENT: Regenerative Heat Exchanger CSAHRG1-31
CODE CLASS 2
CODE TABLE IWC-2500-1

ITEM NO.	EXAM. CAT.	COMPONENT IDENTIFICATION	METHOD OF EXAMINATION	EXTENT OF EXAMINATION 1st PERIOD	2nd PERIOD	3rd PERIOD	REMARKS
C2.30	C-B	Nozzles With Reinforcing Plate in Vessels > ½ in. Nominal Wall Thickness					
C2.31	C-B	Reinforcing Plate Welds to Nozzle and Vessel	Not Applicable				
C2.32	C-B	Nozzle-to-Shell (or Head) Welds When Inside of Vessel Is Accessible	Not Applicable				
C2.33	C-B	Nozzle-to-Shell (or Head) Welds When inside of Vessel Is Inaccessible	Not Applicable				
C3.10	C-C	Integrally Welded Attachments	Not Applicable				
C4.10	C-D	Bolts and Studs	Not Applicable				
C7.10	C-H	Pressure Retaining Boundary Leakage	Visual, VT-2	Each Inspection Period	Each Inspection Period	Each Inspection Period	
C7.20	C-H	Pressure Retaining Boundary Hydrostatic	Visual, VT-2			One Test Per Interval	Code Case N-498-1 Applies

NEW YORK POWER AUTHORITY
INDIAN POIN UNIT NO.3
INSERVIVE INSPECTION PROGRAM
3rd INTERVAL, JULY 21, 2000 THRU JULY 20, 2009

TABLE No. 4

REVISION 0

SECTION XI EDITION: 1989 EDITION, NO ADDENDA
COMPONENT: Residual Heat Exchangers ACAHRS1-31 and ACAHRS-2-32
CODE CLASS 2
CODE TABLE IWC-2500-1

ITEM NO.	EXAM. CAT.	COMPONENT IDENTIFICATION	METHOD OF EXAMINATION	EXTENT OF EXAMINATION 1st PERIOD	2nd PERIOD	3rd PERIOD	REMARKS
C1.10	C-A	Shell Circumferential Welds (2) 1 each Heat Exchanger	Volumetric	1 Weld			
C1.20	C-A	Head Circumferential Welds (2) 1 each Heat Exchanger	Volumetric	1 Weld			
C1.30	C-A	Tubesheet-to-Shell Welds	Not Applicable				
C2.10	C-B	Nozzles in Vessels ≤ ½ in. Nominal Thickness					
C2.11	C-B	Nozzle to Shell (or Head) Welds	Not Applicable				
C2.20	C-B	Nozzles Without Reinforcing Plate In Vessels > ½ in. Nominal Thickness					
C2.21	C-B	Nozzle to Shell (or Head) Welds	Not Applicable				
C2.22	C-B	Nozzle Inside Radius Section	Not Applicable				

TABLE No. 4

REVISION 0

SECTION XI EDITION: 1989 EDITION, NO ADDENDA
COMPONENT: Residual Heat Exchangers ACAHRS1-31 and ACAHRS-2-32
CODE CLASS 2
CODE TABLE IWC-2500-1

ITEM NO.	EXAM. CAT.	COMPONENT IDENTIFICATION	METHOD OF EXAMINATION	EXTENT OF EXAMINATION 1st PERIOD	2nd PERIOD	3rd PERIOD	REMARKS
C2.30	C-B	Nozzles With Reinforcing Plate in Vessels > ½ in. Nominal Wall Thickness					
C2.31	C-B	Reinforcing Plate Welds to Nozzle and Vessel (4) 2 each Heat Exchanger	Surface	2 Welds			
C2.32	C-B	Nozzle-to-Shell (or Head) Welds When Inside of Vessel Is Accessible	Not Applicable				
C2.33	C-B	Nozzle-to-Shell (or Head) Welds When inside of Vessel Is Inaccessible	Visual, VT-2	1 Weld	1 Weld	1 Weld	See Note at Bottom of Page
C3.10	C-C	Integrally Welded Attachments (4) 2 each Heat Exchanger	Surface	2 Welded Attachments			
C4.10	C-D	Bolts and Studs	Not Applicable				
C7.10	C-H	Pressure Retaining Boundary Leakage	Visual, VT-2	Each Inspection Period	Each Inspection Period	Each Inspection Period	
C7.20	C-H	Pressure Retaining Boundary Hydrostatic	Visual, VT-2			One Test Per Interval	Code Case N-498-1 Applies

Note: The Telltale hole in the reinforcing plate shall be examined for evidence of leakage while vessel is undergoing the system pressure test.

TABLE No. 4

REVISION 0

SECTION XI EDITION: 1989 EDITION, NO ADDENDA
COMPONENT: Non Regenerative Letdown Heat Exchanger CSAHNRT-31
CODE CLASS 2
CODE TABLE IWC-25000-1

ITEM NO.	EXAM. CAT.	COMPONENT IDENTIFICATION	METHOD OF EXAMINATION	EXTENT OF EXAMINATION 1st PERIOD	2nd PERIOD	3rd PERIOD	REMARKS
C1.10	C-A	Shell Circumferential Welds (1)	Volumetric	1 Weld			
C1.20	C-A	Head Circumferential Welds (1)	Volumetric	1 Weld			
C1.30	C-A	Tubesheet-to-Shell Welds	Not Applicable				
C2.10	C-B	Nozzles in Vessels ≤ ½ in. Nominal Thickness					
C2.11	C-B	Nozzle to Shell (or Head) Welds	Not Applicable				
C2.20	C-B	Nozzles Without Reinforcing Plate In Vessels > ½ in. Nominal Thickness					
C2.21	C-B	Nozzle to Shell (or Head) Welds	Not Applicable				
C2.22	C-B	Nozzle Inside Radius Section	Not Applicable				

TABLE No. 4

REVISION 0

SECTION XI EDITION: 1989 EDITION, NO ADDENDA
COMPONENT: Non Regenerative Letdown Heat Exchanger CSAHNRT-31
CODE CLASS 2
CODE TABLE IWC-2500-1

ITEM NO.	EXAM. CAT.	COMPONENT IDENTIFICATION	METHOD OF EXAMINATION	EXTENT OF EXAMINATION 1st PERIOD	2nd PERIOD	3rd PERIOD	REMARKS
C2.30	C-B	Nozzles With Reinforcing Plate in Vessels > ½ in. Nominal Wall Thickness					
C2.31	C-B	Reinforcing Plate Welds to Nozzle and Vessel	Not Applicable				
C2.32	C-B	Nozzle-to-Shell (or Head) Welds When Inside of Vessel Is Accessible	Not Applicable				
C2.33	C-B	Nozzle-to-Shell (or Head) Welds When inside of Vessel Is Inaccessible	Not Applicable				
C3.10	C-C	Integrally Welded Attachments	Not Applicable				
C4.10	C-D	Bolts and Studs	Not Applicable				
C7.10	C-H	Pressure Retaining Boundary Leakage	Visual, VT-2	Each Inspection Period	Each Inspection Period	Each Inspection Period	
C7.20	C-H	Pressure Retaining Boundary Hydrostatic	Visual, VT-2			One Test Per Interval	Code Case N-498-1 Applies

TABLE No. 4

REVISION 0

SECTION XI EDITION: 1989 EDITION, NO ADDENDA
COMPONENT: Excess Letdown Heat Exchanger
CODE CLASS 2
CODE TABLE IWC-2500-1

ITEM NO.	EXAM. CAT.	COMPONENT IDENTIFICATION	METHOD OF EXAMINATION	EXTENT OF EXAMINATION 1st PERIOD	2nd PERIOD	3rd PERIOD	REMARKS
C1.10	C-A	Shell Circumferential Welds (1)	Volumetric			1 Weld	
C1.20	C-A	Head Circumferential Welds (1)	Volumetric		1 Weld		
C1.30	C-A	Tubesheet-toShell Welds (6)	Not Applicable				
C2.10	C-B	Nozzles in Vessels ≤ ½ in. Nominal Thickness					
C2.11	C-B	Nozzle to Shell (or Head) Welds	Not Applicable				
C2.20	C-B	Nozzles Without Reinforcing Plate In Vessels > ½ in. Nominal Thickness					
C2.21	C-B	Nozzle to Shell (or Head) Welds	Not Applicable				
C2.22	C-B	Nozzle Inside Radius Section	Not Applicable				

TABLE No. 4

REVISION 0

SECTION XI EDITION: 1989 EDITION, NO ADDENDA
COMPONENT: **Excess Letdown Heat Exchanger**
CODE CLASS 2
CODE TABLE IWC-2500-1

ITEM NO.	EXAM. CAT.	COMPONENT IDENTIFICATION	METHOD OF EXAMINATION	EXTENT OF EXAMINATION 1st PERIOD	2nd PERIOD	3rd PERIOD	REMARKS
C2.30	C-B	Nozzles With Reinforcing Plate in Vessels > ½ in. Nominal Wall Thickness					
C2.31	C-B	Reinforcing Plate Welds to Nozzle and Vessel	Not Applicable				
C2.32	C-B	Nozzle-to-Shell (or Head) Welds When Inside of Vessel Is Accessible	Not Applicable				
C2.33	C-B	Nozzle-to-Shell (or Head) Welds When inside of Vessel Is Inaccessible	Not Applicable				
C3.10	C-C	Integrally Welded Attachments	Not Applicable				
C4.10	C-D	Bolts and Studs	Not Applicable				
C7.10	C-H	Pressure Retaining Boundary Leakage	Visual, VT-2	Each Inspection Period	Each Inspection Period	Each Inspection Period	
C7.20	C-H	Pressure Retaining Boundary Hydrostatic	Visual, VT-2			One Test Per Interval	Code Case N-498-1 Applies

TABLE No. 4

REVISION 0

SECTION XI EDITION: 1989 EDITION, NO ADDENDA
COMPONENT: Seal Water Injection Filters CSFLS1-31 and CSFLS1-32
CODE CLASS 2
CODE TABLE IWC-2500-1

ITEM NO.	EXAM. CAT.	COMPONENT IDENTIFICATION	METHOD OF EXAMINATION	EXTENT OF EXAMINATION 1st PERIOD	2nd PERIOD	3rd PERIOD	REMARKS
C1.10	C-A	Shell Circumferential Welds (2) 1 each Filter	Volumetric			1 Weld	
C1.20	C-A	Head Circumferential Welds (2) 1 each Filter	Volumetric		1 Weld		
C1.30	C-A	Tubesheet-to-Shell Welds	Not Applicable				
C2.10	C-B	Nozzles in Vessels ≤ ½ in. Nominal Thickness					
C2.11	C-B	Nozzle to Shell (or Head) Welds	Not Applicable				
C2.20	C-B	Nozzles Without Reinforcing Plate In Vessels > ½ in. Nominal Thickness					
C2.21	C-B	Nozzle to Shell (or Head) Welds	Not Applicable				
C2.22	C-B	Nozzle Inside Radius Section	Not Applicable				

TABLE No. 4

REVISION 0

SECTION XI EDITION: 1989 EDITION, NO ADDENDA
COMPONENT: Seal Water Injection Filters CSFLS1-31 and CSFLS1-32
CODE CLASS 2
CODE TABLE IWC-2500-1

ITEM NO.	EXAM. CAT.	COMPONENT IDENTIFICATION	METHOD OF EXAMINATION	EXTENT OF EXAMINATION 1st PERIOD	2nd PERIOD	3rd PERIOD	REMARKS
C2.30	C-B	Nozzles With Reinforcing Plate in Vessels > ½ in. Nominal Wall Thickness					
C2.31	C-B	Reinforcing Plate Welds to Nozzle and Vessel	Not Applicable				
C2.32	C-B	Nozzle-to-Shell (or Head) Welds When Inside of Vessel Is Accessible	Not Applicable				
C2.33	C-B	Nozzle-to-Shell (or Head) Welds When inside of Vessel Is Inaccessible	Not Applicable				
C3.10	C-C	Integrally Welded Attachments	Not Applicable				
C4.10	C-D	Bolts and Studs	Not Applicable				
C7.10	C-H	Pressure Retaining Boundary Leakage	Visual, VT-2	Each Inspection Period	Each Inspection Period	Each Inspection Period	
C7.20	C-H	Pressure Retaining Boundary Hydrostatic	Visual, VT-2			One Test Per Interval	Code Case N-498-1 Applies

NEW YORK POWER AUTHORITY
INDIAN POIN UNIT NO.3
INSERVIVE INSPECTION PROGRAM
3rd INTERVAL, JULY 21, 2000 THRU JULY 20, 2009

TABLE No. 4 REVISION 0

SECTION XI EDITION: 1989 EDITION, NO ADDENDA
COMPONENT: Piping
CODE CLASS 2
CODE TABLE IWC-2500-1

ITEM NO.	EXAM. CAT.	COMPONENT IDENTIFICATION	METHOD OF EXAMINATION	EXTENT OF EXAMINATION 1st PERIOD	2nd PERIOD	3rd PERIOD	REMARKS
C3.20	C-C	Integrally Welded Attachments (57)	Surface	2 Attachments	2 Attachments	2 Attachments	See Note 1 at Bottom of Page
C4.20	C-D	Bolts and Studs	Not Applicable				
C5.10	C-F-1	Piping Welds ≥ 3/8 in. Nominal Wall Thickness for Piping > NPS 4					
C5.11	C-F-1	Circumferential Welds (312) Total Population including Exempt 460	Surface and Volumetric	12 Welds	13 Welds	13 Welds	See Note 2 at Bottom of Page
C5.12	C-F-1	Longitudinal Welds (27)	Surface and Volumetric				Code Case N-524 Applies

Note 1: Code Case N-509 applied for the selection process of Piping Intergral Attachments
Note 2: Total weld count used for 7.5% sampling size is 460

TABLE No. 4 REVISION 0

SECTION XI EDITION: 1989 EDITION, NO ADDENDA
COMPONENT: Piping
CODE CLASS 2
CODE TABLE IWC-2500-1

ITEM NO.	EXAM. CAT.	COMPONENT IDENTIFICATION	METHOD OF EXAMINATION	EXTENT OF EXAMINATION 1st PERIOD	2nd PERIOD	3rd PERIOD	REMARKS
C5.20	C-F-1	Piping Welds > 1/5 in. Nominal Wall Thickness for Piping ≥ NPS 2 and ≤ NPS 4					
C5.21	C-F-1	Circumferential Welds (89)	Surface and Volumetric	2 Welds	3 Welds	2Welds	
C5.22	C-F-1	Longitudinal Welds	Not Applicable				
C5.30	C-F-1	Socket Welds (123)	Surface	3 Welds	4 Welds	4 Welds	
C5.40	C-F-1	Pipe Branch Connections of Branch Piping ≥ NPS 2					
C5.41	C-F-1	Circumferential Welds (4)	Surface		1 Weld		
C5.42	C-F-1	Longitudinal Welds	Not Applicable				
C7.30	C-H	Pressure Retaining Boundary Leakage	Visual, VT-2	Each Inspection Period	Each Inspection Period	Each Inspection Period	
C7.40	C-H	Pressure Retaining Boundary Hydrostatic	Visual, VT-2			One Test Per Interval	Code Case N-498-1 Applies

NEW YORK POWER AUTHORITY
INDIAN POIN UNIT NO.3
INSERVIVE INSPECTION PROGRAM
3rd INTERVAL, JULY 21, 2000 THRU JULY 20, 2009

TABLE No. 4 REVISION 0

SECTION XI EDITION: 1989 EDITION, NO ADDENDA
COMPONENT: Piping (Augmented)
CODE CLASS 2
CODE TABLE IWC-2500-1

ITEM NO.	EXAM. CAT.	COMPONENT IDENTIFICATION	METHOD OF EXAMINATION	EXTENT OF EXAMINATION 1st PERIOD	2nd PERIOD	3rd PERIOD	REMARKS
AUG	C-F-1	Containment Spray System (72) 8" Sch 40, Thickness 0.322"	Volumetric		3 Welds	3 Welds	See Note at Bottom of Page

Note: Augmented Examinations

TABLE No. 4 REVISION 0

SECTION XI EDITION: 1989 EDITION, NO ADDENDA
COMPONENT: Piping
CODE CLASS 2
CODE TABLE IWC-2500-1

ITEM NO.	EXAM. CAT.	COMPONENT IDENTIFICATION	METHOD OF EXAMINATION	EXTENT OF EXAMINATION 1st PERIOD	2nd PERIOD	3rd PERIOD	REMARKS
C5.50	C-F-2	Piping Welds ≥ 3/8 in. Nominal Wall Thickness for Piping > NPS 4					
C5.51	C-F-2	Circumferential Welds (222)	Surface and Volumetric	5 Welds	7 Welds	5 Welds	
C5.52	C-F-2	Longitudinal Welds (4)	Surface and Volumetric				Code Case N-524 Applies
C5.60	C-F-2	Piping Welds > 3/8 in. Nominal Wall Thickness for Piping ≥ NPS 2 And ≤ NPS 4					
C5.61	C-F-2	Circumferential Welds	Not Applicable				
C5.62	C-F-2	Longitudinal Welds	Not Applicable				
C5.70	C-F-2	Socket Welds	Not Applicable				
C5.80	C-F-2	Pipe Branch Connections of Branch Piping ≥ NPS 2					
C5.81	C-F-2	Circumferential Welds (28)	Surface	1 Weld	2 Welds		
C5.82	C-F-2	Longitudinal Welds	Not Applicable				

NEW YORK POWER AUTHORITY
INDIAN POIN UNIT NO.3
INSERVIVE INSPECTION PROGRAM
3rd INTERVAL, JULY 21, 2000 THRU JULY 20, 2009

TABLE No. 4 REVISION 0

SECTION XI EDITION: 1989 EDITION, NO ADDENDA
COMPONENT: **Residual Heat Removal Pumps ACAPRH1-31 and ACAPRH2-32**
CODE CLASS 2
CODE TABLE IWC-2500-1

ITEM NO.	EXAM. CAT.	COMPONENT IDENTIFICATION	METHOD OF EXAMINATION	EXTENT OF EXAMINATION 1st PERIOD	2nd PERIOD	3rd PERIOD	REMARKS
C3.30	C-C	Integrally Welde Attachments	Not Applicable				
C4.30	C-D	Bolts and Studs	Not Applicable				
C6.10	C-G	Pump Casing Welds	Not Applicable				
C7.30	C-H	Pressure Retaining Boundary Leakage	Visual, VT-2	Each Inspection Period	Each Inspection Period	Each Inspection Period	
C7.40	C-H	Pressure Retaining Boundary Hydrostatic	Visual, VT-2			One Test Per Interval	Code Case N-498-1 Applies

TABLE No. 4 REVISION 0

SECTION XI EDITION: 1989 EDITION, NO ADDENDA
COMPONENT: Charging Pumps CSAPH1-31, CSAPCH2-32, and CSAPCH3-33
CODE CLASS 2
CODE TABLE IWC-2500-1

ITEM NO.	EXAM. CAT.	COMPONENT IDENTIFICATION	METHOD OF EXAMINATION	EXTENT OF EXAMINATION 1st PERIOD	2nd PERIOD	3rd PERIOD	REMARKS
C3.30	C-C	Integrally Welded Attachments	Not Applicable				
C4.30	C-D	Bolts and Studs	Not Applicable				
C6.10	C-G	Pump Casing Welds	Not Applicable				
C7.30	C-H	Pressure Retaining Boundary Leakage	Visual, VT-2	Each Inspection Period	Each Inspection Period	Each Inspection Period	
C7.40	C-H	Pressure Retaining Boundary Hydrostatic	Visual, VT-2			One Test Per Interval	Code Case N-498-1 Applies

NEW YORK POWER AUTHORITY
INDIAN POIN UNIT NO.3
INSERVIVE INSPECTION PROGRAM
3rd INTERVAL, JULY 21, 2000 THRU JULY 20, 2009

TABLE No. 4 REVISION 0

SECTION XI EDITION: 1989 EDITION, NO ADDENDA
COMPONENT: Safety Injection Pumps INTSIAPSI1-31, INTSIAPSI2-32, AND INTSIAPSI3-33
CODE CLASS 2
CODE TABLE IWC-2500-1

ITEM NO.	EXAM. CAT.	COMPONENT IDENTIFICATION	METHOD OF EXAMINATION	EXTENT OF EXAMINATION 1st PERIOD	2nd PERIOD	3rd PERIOD	REMARKS
C3.30	C-C	Integrally Welded Attachments	Not Applicable				
C4.30	C-D	Bolts and Studs	Not Applicable				
C6.10	C-G	Pump Casing Welds	Not Applicable				
C7.30	C-H	Pressure Retaining Boundary Leakage	Visual, VT-2	Each Inspection Period	Each Inspection Period	Each Inspection Period	
C7.40	C-H	Pressure Retaining Boundary Hydrostatic	Visual, VT-2			One Test Per Interval	Code Case N-498-1 Applies

TABLE No. 4 REVISION 0

SECTION XI EDITION: 1989 EDITION, NO ADDENDA
COMPONENT: Valves
CODE CLASS 2
CODE TABLE IWC-2500-1

ITEM NO.	EXAM. CAT.	COMPONENT IDENTIFICATION	METHOD OF EXAMINATION	EXTENT OF EXAMINATION 1st PERIOD	2nd PERIOD	3rd PERIOD	REMARKS
C3.40	C-C	Integrally Welded Attachments	Not Applicable				
C4.30	C-D	Bolts and Studs	Not Applicable				
C6.20	C-G	Valve Body Welds	Not Applicable				
C7.30	C-H	Pressure Retaining Boundary Leakage	Visual, VT-2	Each Inspection Period	Each Inspection Period	Each Inspection Period	
C7.40	C-H	Pressure Retaining Boundary Hydrostatic	Visual, VT-2			One Test Per Interval	Code Case N-498-1 Applies

TABLE No. 4 REVISION 0

SECTION XI EDITION: 1989 EDITION, NO ADDENDA
COMPONENT: **Integral Attachments for Class 3 Vessels**
CODE CLASS 3
CODE TABLE IWD-2500-1

ITEM NO.	EXAM. CAT.	COMPONENT IDENTIFICATION	METHOD OF EXAMINATION	EXTENT OF EXAMINATION 1st PERIOD	2nd PERIOD	3rd PERIOD	REMARKS
D1.10	D-A	Pressure Vessels Integrally Welded Attachments (27)	Visual, VT-1	4 Attachments	4 Attachments	4 Attachments	See Note Below
D1.10	D-A	Pressure Retaining Boundary Leakage	Visual, VT-2	Each Inspection Period	Each Inspection Period	Each Inspection Period	
D1.10	D-A	Pressure Retaining Boundary Hydrostatic	Visual, VT-2			One Test Per Interval	Code Case N-498-1 Applies

Note: Code Case N-509 applied for accountability and selection of all Class 3 integrally welded attachments in Examination Categories D-A, D-B, and D-C of IWD.

NEW YORK POWER AUTHORITY
INDIAN POIN UNIT NO.3
INSERVIVE INSPECTION PROGRAM
3rd INTERVAL, JULY 21, 2000 THRU JULY 20, 2009

TABLE No. 4 REVISION 0

SECTION XI EDITION: 1989 EDITION, NO ADDENDA
COMPONENT: **Integral Attachments for Class 3 Piping**
CODE CLASS 3
CODE TABLE IWD-2500-1

ITEM NO.	EXAM. CAT.	COMPONENT IDENTIFICATION	METHOD OF EXAMINATION	EXTENT OF EXAMINATION 1st PERIOD	2nd PERIOD	3rd PERIOD	REMARKS
D1.20	D-A	Piping Integrally Welded Attachments (96)	Visual, VT-1	4 Attachments	4 Attachments	4 Attachments	See Note Below
D1.10	D-A	Pressure Retaining Boundary Leakage	Visual, VT-2	Each Inspection Period	Each Inspection Period	Each Inspection Period	
D1.10	D-A	Pressure Retaining Boundary Hydrostatic	Visual, VT-2			One Test Per Interval	Code Case N-498-1 Applies

Note: Code Case N-509 applied for accountability and selection of all Class 3 integrally welded attachments in Examination Categories D-A, D-B, and D-C of IWD.

TABLE No. 4

REVISION 0

SECTION XI EDITION: 1989 EDITION, NO ADDENDA
COMPONENT: **Pumps Integrally Welded Attachments**
CODE CLASS 3
CODE TABLE IWD-2500-1

ITEM NO.	EXAM. CAT.	COMPONENT IDENTIFICATION	METHOD OF EXAMINATION	EXTENT OF EXAMINATION 1st PERIOD	2nd PERIOD	3rd PERIOD	REMARKS
D1.30	D-A	Pumps Integrally Welded Attachments (34)	Visual, VT-1	4 Attachments	4 Attachments	5 Attachments	See Note Below
D1.10	D-A	Pressure Retaining Boundary Leakage	Visual, VT-2	Each Inspection Period	Each Inspection Period	Each Inspection Period	
D1.10	D-A	Pressure Retaining Boundary Hydrostatic	Visual, VT-2			One Test Per Interval	Code Case N-498-1 Applies

Note: Code Case N-509 applied for accountability and selection of all Class 3 integrally welded attachments in Examination Categories D-A, D-B, and D-C of IWD

TABLE No. 4

REVISION 0

SECTION XI EDITION: 1989 EDITION, NO ADDENDA
COMPONENT: Supports
CODE CLASS 1
CODE TABLE IWB-2500-1

ITEM NO.	EXAM. CAT.	COMPONENT IDENTIFICATION	METHOD OF EXAMINATION	EXTENT OF EXAMINATION 1st PERIOD	2nd PERIOD	3rd PERIOD	REMARKS
F1.10	F-A	Class 1 Piping Supports (116)	Visual, VT-3	11 Supports	11 Supports	11 Supports	Code Case N-491-1 Applies (25%)

NEW YORK POWER AUTHORITY
INDIAN POIN UNIT NO.3
INSERVIVE INSPECTION PROGRAM
3rd INTERVAL, JULY 21, 2000 THRU JULY 20, 2009

TABLE No. 4 REVISION 0

SECTION XI EDITION: 1989 EDITION, NO ADDENDA
COMPONENT: Supports
CODE CLASS 2
CODE TABLE IWC-2500-1

ITEM NO.	EXAM. CAT.	COMPONENT IDENTIFICATION	METHOD OF EXAMINATION	EXTENT OF EXAMINATION 1st PERIOD	2nd PERIOD	3rd PERIOD	REMARKS
F1.20	F-A	Class 2 Piping Supports (258)	Visual, VT-3	13 Supports	14 Supports	14 Supports	Code Case N-491-1 Applies (15%)

NEW YORK POWER AUTHORITY
INDIAN POIN UNIT NO.3
INSERVIVE INSPECTION PROGRAM
3rd INTERVAL, JULY 21, 2000 THRU JULY 20, 2009

TABLE No. 4 REVISION 0

SECTION XI EDITION: 1989 EDITION, NO ADDENDA
COMPONENT: Supports
CODE CLASS 3
CODE TABLE IWF-2500-1

ITEM NO.	EXAM. CAT.	COMPONENT IDENTIFICATION	METHOD OF EXAMINATION	EXTENT OF EXAMINATION 1st PERIOD	2nd PERIOD	3rd PERIOD	REMARKS
F1.30	F-A	Class 3 Piping Supports (674)	Visual, VT-3	24 Supports	24 Supports	26 Supports	Code Case N-491-1 Applies (10%)

NEW YORK POWER AUTHORITY
INDIAN POIN UNIT NO.3
INSERVIVE INSPECTION PROGRAM
3rd INTERVAL, JULY 21, 2000 THRU JULY 20, 2009

TABLE No. 4 REVISION 0

SECTION XI EDITION: 1989 EDITION, NO ADDENDA
COMPONENT: Supports
CODE CLASS 1, 2, and 3
CODE TABLE IWF-2500-1

ITEM NO.	EXAM. CAT.	COMPONENT IDENTIFICATION	METHOD OF EXAMINATION	EXTENT OF EXAMINATION 1st PERIOD	2nd PERIOD	3rd PERIOD	REMARKS
F1.40	F-A	Supports Other than Piping Supports Class 1, 2, and 3 (71)	Visual, VT-3	9 Supports	9 Supports	10 Supports	Code Case N-491-1 Applies (100%) See Note Below

Note: For multiple components within a system of similar design, function, and service, the supports of only one of the multiple components are required to be examined.

Introduction

There are a total of twenty-seven (27) Relief Requests submitted with this 3rd Interval ISI Program Plan. Pages 2 through 4 of this attachment list the individual Relief Requests with a brief description and status. Each RR is individually paged.

Additional Information on Pressure Testing Relief Requests

The first five (5) are Pressure Testing Relief Requests. Relief Requests RR 3-3 and RR 3-4 are very similar and were written to be used in tandem by NYPA to allow for operational flexibility; to minimize radiation exposure; and to maximize personnel safety. The following is an illustrative example of how NYPA may use these Relief Requests in tandem:

As an example, Relief Request RR 3-4 would be used to perform inspections on most Class 1 bolted connections, with insulation installed, at NOP/NOT at the start of a refueling outage. The only areas not inspected using Relief Request RR 3-4 would be two (2) Reactor Coolant Pumps, which are scheduled to have their insulation removed as part of scheduled maintenance, and 3 valves which are in areas of high heat stress and/or high radiation. For the two (2) Reactor Coolant Pumps and 3 valves, Relief Request RR 3-3 would be used to allow a VT-2 with the insulation removed while in the refuel outage and a VT-2 with insulation installed at startup.

In the example given, use of Relief Request RR 3-4 would reduce the amount of insulation which would require removal during the outage, thereby reducing radiation exposure. Similarly, Relief Request RR 3-3 would allow removal of insulation from certain areas where maintenance would require removal of insulation anyway, or where heat stress and/or high radiation fields could be encountered at NOP/NOT following sustained operation. By utilizing both Relief Requests RR 3-3 and RR 3-4 NYPA will have the operational flexibility to minimize radiation exposure, and maximize personnel safety.

IP3 3rd 10-Year ISI Interval Program Plan, Rev. 0
Table 4.0, Attachment A
Summary of Relief Requests

Relief Request Number*	System or Component	Summary of Request for Relief	Status	Similar RR Approved in 2nd Interval ?
3-1 (H)	Class 1, 2, 3	Removal of bolting @ bolted connections to perform VT-3	Submitted with 3rd Interval Program Plan	n/a
3-2 (H)	Class 1, 2, 3	N-546, Qualification and Certification for VT-2 Examination Personnel	Submitted with 3rd Interval Program Plan	n/a
3-3 (H)	Class 1 & 2	N-533, Relief from insulation removal from borated system bolted connections to perform VT-2	Submitted with 3rd Interval Program Plan	n/a
3-4 (H)	Class 1& 2	Perform system pressure test and VT-2 without insulation removal	Submitted with 3rd Interval Program Plan	n/a
3-5 (H)	Class 1, 2, 3	Relief from removing bolting to perform VT-3 if same bolting was replaced during the same outage and later leakage occurred at the bolted connection during Pressure Test	Submitted with 3rd Interval Program Plan	n/a
3-6 (I)	Class 1, 2	PDI on piping and RPV using 1995/96 Addenda	Submitted with 3rd Interval Program Plan	n/a
3-7 (A)	All	Use of Code Case N-532 for NIS-2A	Submitted with 3rd Interval Program Plan	n/a
3-8 (I)	Class 1, 2	Relief from CP-189 on personnel qualification and certification	Submitted with 3rd Interval Program Plan	n/a
3-9 (I)	Class 1	Code CaseN-613, alternate UT examination of RV-to-nozzle welds	Submitted with 3rd Interval Program Plan	n/a
3-10 (I)	Class 1, 2, 3	Code Case N-583, Annual Training Requirement	Submitted with 3rd Interval Program Plan	n/a

* Relief Request by category (in parenthesis): A – All; I – Class 1,2, 3 systems; C – Containment; H – Hydro; S – Snubber

IP3 3rd 10-Year ISI Interval Program Plan, Rev. 0
Table 4.0, Attachment A
Summary of Relief Requests

Relief Request Number*	System or Component	Summary of Request for Relief	Status	Similar RR Approved in 2nd Interval ?
3-11 (I)	Class 1 & 2	Weld reference system	Submitted with 3rd Interval Program Plan	n/a
3-12 (I)	Class 1	RV Closure Head and Bottom Head Circ. and Meridional welds limitation	Submitted with 3rd Interval Program Plan	Yes RR 2-2 & RR 2-3
3-13 (I)	Class 3	Relief from GL 90-05 requirement to submit individual RR for Class 3 Repair/Replacement	Submitted with 3rd Interval Program Plan	n/a
3-14 (I)	Class 1	PZR shell-to-head Circumferential and longitudinal welds	Submitted with 3rd Interval Program Plan	Yes RR 2-8
3-15 (I)	Class 3	Use Code Case N-597 for analytical evaluations of SW Piping defects	Submitted with 3rd Interval Program Plan	n/a
3-16 (I)	Class 1	PZR inner radius, VT-2 only	Submitted with 3rd Interval Program Plan	Yes, RR 2-9 Slightly modified for 3rd Interval
3-17 (I)	Class 3	Use Code Case N-562-1 for weld overlays of SW piping	Submitted with 3rd Interval Program Plan	n/a
3-18 (I)	Class 1	RV nozzle to safe-end welds, perform from ID in lieu of surface and volumetric exams from outside.	Submitted with 3rd Interval Program Plan	Yes, RR 2-6 approved with conditions
3-19 (I)	Class 1	Shell to Flange inspection deferral to 3rd period	Submitted with 3rd Interval Program Plan	Yes, RR 2-4 Slightly modified for 3rd Interval
3-20 (I)	Class 1	Use Code Case N-622 for UT examination of RPV and Piping, Bolts,, and studs	Submitted with 3rd Interval Program Plan	n/a

* Relief Request by category (in parenthesis): A – All; I – Class 1,2, 3 systems; C – Containment; H – Hydro; S – Snubber

IP3 3rd 10-Year ISI Interval Program Plan, Rev. 0
Table 4.0, Attachment A
Summary of Relief Requests

Relief Request Number*	System or Component	Summary of Request for Relief	Status	Similar RR Approved in 2nd Interval ?
3-21 (I)	Class 1	Reactor Coolant Piping Circ. Welds, use tool to inspect from ID at end of Interval	Submitted with 3rd Interval Program Plan	Yes, RR 2-10 with Conditions
3-22 (I)	Class 2	Regen HX Volumetric Examination Limitation	Submitted with 3rd Interval Program Plan	Relief will be submitted with 2nd Interval Program Closeout on exam. limitation
3-23 (I)	Class 2	Inside radius Sections – S/G Main Steam Nozzle Inside Radius Sections	Submitted with 3rd Interval Program Plan	Yes, RR 2-16
3-24 (C)	Class MC	Use applicable portions of the 1998 Code for Containment exams of Class MC components, and certification and qualification of personnel	Submitted with 3rd Interval Program Plan	n/a
3-25 (C)	Class CC	Use applicable portions of the 1998 Code for Containment exams of Class CC components, and certification and qualification of personnel	Submitted with 3rd Interval Program Plan	n/a
3-26 (A)	ALL	Use Code Case N-573 for transfer of procedure qualification between Owners	Submitted with 3rd Interval Program Plan	n/a
3-27 (S)	Class 1, 2, 3	Use GL 90-09 rules for Snubber Inspections	Submitted with 3rd Interval Program Plan	n/a

* Relief Request by category (in parenthesis): A – All; I – Class 1,2, 3 systems; C – Containment; H – Hydro; S – Snubber

This Page Intentionally Left Blank

Indian Point #3
Third Inservice Inspection Interval
Relief Request No. 3-1 (H), Rev. 1

A. ARTICLE IDENTIFICATION:

IWA-5000, Section IWA-5250(a)(2)

Class: 1, 2 and 3
System: All

B. EXAMINATION REQUIREMENTS:

ASME Section XI 1989 Edition, IWA-5250,

(a) The source of leakages detected during the conduct of a system pressure test shall be located and evaluated by the owner for corrective measures as follows:

(2) If leakage occurs at a bolted connection, the bolting shall be removed, VT-3 visually examined for corrosion, and evaluated in accordance with IWA-3100.

C. RELIEF REQUESTED:

Indian Point 3 requests relief from all requirements of IWA-5250(a)(2). Pursuant to 10CFR50.55a(a)(3)(i) relief is requested on the basis that the proposed alternatives discussed in this request for relief would provide an acceptable level of quality and safety.

D. BASIS FOR RELIEF:

There are several problems associated with the current requirements of IWA-5250(a)(2). These problems are summarized below.

1. IWA-3100 does not provide an acceptance standard for a VT-3 bolt inspection.

2. The requirement calls for bolt removal without regard to the size of the leakage.

3. The requirement increases the radiological dose to workers for leaks that are often not a challenge to operational or structural limits.

4. In some cases, bolts cannot be removed without damaging the bolts. In some cases, bolts cannot be removed due to the component configuration.

5. It is not a requirement of the Code that the Owner must stop the leakage, and inspection of the bolting is not necessarily going to stop the leak.

6. Removing one bolt at a time, if allowed by system conditions, may actually increase the leakage.

7. In many cases, implementation of the requirement would cause the plant an unnecessary transient or delay startup.

E. ALTERNATIVE EXAMINATIONS OR TESTS:

The source of leakage at bolted connections detected by VT-2 examination during system pressure tests shall be located and evaluated for corrective measures. This evaluation will consider the following variables at a minimum:

1. Location of leakage

2. History of leakage

3. Fastener materials

4. Evidence of corrosion, with the connection assembled.

5. Corrosiveness of the process fluid and

6. Other components in the vicinity that may be degraded due to the leakage.

When the evaluation of the above variables is concluded and the evaluation determines that the leaking condition has not degraded the fasteners, then no further action is necessary. However, reasonable attempts to stop the leakage shall be taken.

If the evaluation of the variables above indicates the need for further evaluation, or no evaluation is performed, then a bolt closest to the source of leakage shall be removed. The bolt will receive a VT-1 examination and be evaluated for corrosion in accordance with IWA-3100(a) and disposition in accordance with IWB-3140. When the removed bolting shows evidence of rejectable degradation, all remaining bolts shall be removed and receive a VT-1 examination and evaluation in accordance with IWB-3140. If the leakage is identified when the bolted connection is in service, and the information in the evaluation is supportive, the removal of the bolt for VT-1 examination may be deferred to the next refueling outage.

F. JUSTIFICATION FOR REQUESTING RELIEF

The ASME Code Committee has approved Code Case N-566, which allows evaluation of leakage at bolted connections. This relief request is more prescriptive and conservative than Code Case N-566. The proposed joint evaluation must consider specific factors which, if indicative of degradation, must be dispositioned in accordance with IWB-3140 of Section XI. This engineering evaluation is more comprehensive than the simple bolt inspection currently required by IWA-5250. The proposed alternative also addresses many of the implementation and radiological hardships associated with IWA-5250(a)(2) and yet maintains the conclusion of the ASME Code Committee by assuring that a proper evaluation of the connection and/or the bolting is performed.

The proposed alternative requirements will ensure an acceptable level of quality and safety by ensuring that structural integrity is maintained, while reducing the operational, maintenance and radiological hardships of the current Code requirement. A similar relief request submitted by Carolina Power and Light Company, Harris Nuclear Power Plant, was approved by the NRC in an SER dated November 4, 1998. Therefore, this relief request should be granted in accordance with 10CFR50.55a(a)(3)(i).

G. IMPLEMENTATION SCHEDULE:

The requirements as specified in this relief request will be incorporated into the IP3 Inservice Inspection Program during the 3rd Ten-Year Interval.

H. ATTACHMENTS TO THE RELIEF:

None

I. STATUS

Submitted.

This Page Intentionally Left Blank

Indian Point #3
Third Inservice Inspection Interval
Relief Request No. 3-2 (H), Rev. 1

A. ARTICLE IDENTIFICATION:

IWA-2300

B. EXAMINATION REQUIREMENTS:

ASME Section XI 1989 Edition,IWA-2300, requirements for qualification and certification of VT-2 visual examination personnel

C. RELIEF REQUESTED:

Indian Point 3 requests relief from the requirements of IWA-2300. Pursuant to 10CFR50.55a(a)(3)(i) relief is requested on the basis that the proposed alternative would provide an acceptable level of quality and safety.

D. BASIS FOR RELIEF:

As stated in Code Case N-546, plant personnel (e.g., licensed and non-licensed operators, system engineers, testing technicians) with the specified training and plant walkdown experience need not be qualified nor certified to comparable levels of competence in accordance with ANSI N45.2.6. Experience in identifying equipment problems and knowledge of operating conditions will enhance the ability of plant personnel to locate leakage during VT-2 examinations. With the specified four hours of training on Section XI requirements and plant specific procedures for VT-2 examinations, the designated plant personnel will understand how leaks should be identified and documented and be fully capable of performing VT-2 examinations.

Qualifying personnel for VT-2 examinations under Code Case N-546 is less burdensome than qualifying and maintaining the present VT-2 certification. Adopting this Code Case makes it feasible to train more people to perform these tasks. Furthermore, using personnel who are already required to perform functions in the plant will reduce the number of people required to enter into areas that may be radiologically restricted, resulting in fewer plant workers exposed to potential radiation dose and keeping radiation exposure as low as reasonably achievable.

Additionally, use of on-shift personnel will improve the process of returning systems to service. Prompt return of safety systems to service will improve the safety of the plant and the public.

E. ALTERNATIVE EXAMINATIONS OR TESTS:

Indian Point 3 proposes the following alternative qualification requirements for VT-2 visual examination personnel:

(a) At least 40 hours of plant walkdown experience, such as that gained by licensed and nonlicensed operators, local leak rate personnel, system engineers and inspection and nondestructive examination personnel;

(b) At least four hours of training on Section XI requirements and plant specific procedures for VT-2 visual examination; and

(c) Vision test requirements of IWA-2321, 1989 Edition, which is the ISI Code in effect for IP3.

F. JUSTIFICATION FOR REQUESTING RELIEF

In accordance with the provisions of 10CFR50.55A(a)(3)(i), the proposed alternative qualification requirements will provide an acceptable level of quality and safety. The proposed alternative qualification requirements are identical to those of ASME Section XI Code Case N-546. The Nuclear Regulatory Commission has not generically approved Code Case N-546 in Regulatory Guide 1.147, "Inservice Inspection Code Case Acceptability ASME Section XI Division 1." However, other plants have requested and received Nuclear Regulatory Commission approval to use Code Case N-546. A copy of Code Case N-546 is attached.

G. IMPLEMENTATION SCHEDULE:

The requirements as specified in this relief request will be incorporated into the IP3 Inservice Inspection Program during the 3rd Ten-Year Interval.

H. ATTACHMENTS TO THE RELIEF:

Code Case N-546.

I. STATUS

Submitted.

Approval Date: August 24, 1995
See Numeric Index for expiration and any reaffirmation dates.

Case N-546
Alternative Requirements for Qualification of VT-2 Examination Personnel
Section XI, Division 1

Inquiry: What alternative to the requirements of IWA-2300 may be used for qualification of VT-2 visual examination personnel?

Reply: It is the opinion of the Committee that VT-2 visual examination personnel need not be qualified nor certified to comparable levels of competence in accordance with the referenced standard (i.e., ANSI N45.2.6, ASNT SNT-TC-1A, or ASNT CP-189) provided the examination personnel are qualified in accordance with the following requirements.

(a) At least 40 hr plant walkdown experience, such as that gained by licensed and nonlicensed operators, local leak rate personnel, system engineers, and inspection and nondestructive examination personnel.

(b) At least 4 hr of training on Section XI requirements and plant specific procedures for VT-2 visual examination.

(c) Vision test requirements of IWA-2321, 1995 Edition.

This Page Intentionally Left Blank

Indian Point #3
Third Inservice Inspection Interval
Relief Request No. 3-3 (H), Rev. 1

A. ARTICLE IDENTIFICATION:

IWA-5000, Section IWA-5242(a)

Class: 1 and 2
System: Reactor Coolant, Chemical and Volume Control, Safety Injection and Residual Heat Removal.

B. EXAMINATION REQUIREMENTS:

ASME Section XI 1989 Edition, IWA-5242,

(a) For systems borated for the purpose of controlling reactivity, insulation shall be removed from pressure retaining bolted connections for VT-2 visual examination.

C. RELIEF REQUESTED:

Indian Point 3 requests relief from all requirements of IWA-5242(a). Pursuant to 10CFR50.55(a)(3)(ii) relief is requested on the basis that compliance with the specified requirements of this section would result in hardship or unusual difficulty without a compensating increase in the level of quality and safety.

D. BASIS FOR RELIEF:

Inside containment, the referenced systems are tested in an environment that is hazardous to personnel. Removing and reinstalling insulation under these conditions is difficult to perform and is not consistent with the ALARA (as low as reasonably achievable) concept when compared to the alternate approach. In addition, the removal and reinstallation of insulation is often a critical path activity which directly affects the duration of refueling outages, therefore placing a financial hardship on the plant.

The concern that led to the Section XI requirement for removal of insulation on bolted connections, while performing pressure testing and VT-2 examinations, is that a borated-water leak from a bolted connection could cause corrosion of the bolting materials. Thus, the structural integrity of a safety-related system could be compromised by a small leak that could be unnoticed if the insulation remains in place during the pressure testing and VT-2 examination.

This relief request addresses the structural integrity concerns while mitigating the personnel hazards and reducing the critical path impact of the testing. It divides the pressure testing and the VT-2 examination into two activities that need not be performed at the same time. The proposed alternate examination is supported by the following:

(a) ASME Code Case N-533 was approved by the Section XI Code Committee, thus providing an alternative to the similar requirement for examination of insulated Class 1 pressure retaining bolted connections.

(b) Similar relief requests have been approved by the NRC for other nuclear power plants (V.C. Summer Nuclear Station, Surry Power Station and Shearon Harris Nuclear Plant).

(c) Pre-existing boric acid leaks will be detected at atmospheric or static pressures due to residue deposits.

E. ALTERNATIVE EXAMINATIONS OR TESTS:

The following alternate rules for the pressure testing and VT-2 visual examination of pressure retaining bolted connections will be used:

(a) A system pressure test and VT-2 visual examination shall be performed each inspection period without removal of insulation.

(b) The insulation shall be removed from the bolted connections each inspection period, and a VT-2 visual examination shall be performed. The connections are not required to be pressurized. Any evidence of leakage shall be evaluated in accordance with the requirements specified in Indian Point 3 relief request RR 3-1.

F. JUSTIFICATION FOR REQUESTING RELIEF

The proposed alternative provides an acceptable level of quality and safety since the insulated bolted connections still receive pressure testing and visual VT-2 examinations each inspection period. There are no changes being made neither to the areas that are inspected nor to visual VT-2 personnel qualifications. Neither are there any changes to acceptance criteria.

G. IMPLEMENTATION SCHEDULE:

The requirements as specified in this relief request will be incorporated into the IP3 Inservice Inspection Program during the 3rd Ten-Year Interval.

H. ATTACHMENTS TO THE RELIEF:

None

Approval Date: March 14, 1995
See Numeric Index for expiration and any reaffirmation dates.

Case N-533
Alternative Requirements for VT-2 Visual Examination of Class 1 Insulated Pressure-Retaining Bolted Connections
Section XI, Division 1

Inquiry: What alternative requirements may be used in lieu of those of IWA-5242(a) to remove insulation from Class 1 pressure-retaining bolted connections to perform a VT-2 visual examination?

Reply: It is the opinion of the Committee that, as an alternative to the requirements of IWA-5242(a) to remove insulation from Class 1 pressure-retaining bolted connections to perform a VT-2 visual examination, the following requirements shall be met.

(a) A system pressure test and VT-2 visual examination shall be performed each refueling outage without removal of insulation.

(b) Each refueling outage the insulation shall be removed from the bolted connection, and a VT-2 visual examination shall be performed. The connection is not required to be pressurized. Any evidence of leakage shall be evaluated in accordance with IWA-5250.

This Page Intentionally Left Blank

Indian Point #3
Third Inservice Inspection Interval
Hydrostatic Relief Request No. 3-4 (H), Rev. 1

A. ARTICLE IDENTIFICATION:

IWA-5000, Section IWA-5242(a)

Class: 1 and 2
System: Reactor Coolant, Chemical and Volume Control, Safety Injection and Residual Heat Removal

B. EXAMINATION REQUIREMENTS:

ASME Section XI 1989 Edition, IWA-5242,

(a) For systems borated for the purpose of controlling reactivity, insulation shall be removed from pressure retaining bolted connections for VT-2 visual examination.

C. RELIEF REQUESTED:

Indian Point 3 requests relief from all requirements of IWA-5242(a). Pursuant to 10CFR50.55(a)(3)(ii) relief is requested on the basis that compliance with the specified requirements of this section would result in hardship or unusual difficulty without a compensating increase in the level of quality and safety.

D. BASIS FOR RELIEF:

Inside containment, the referenced systems are tested in an environment that is hazardous to personnel. Removing and reinstalling insulation under these conditions is difficult to perform and is not consistent with the ALARA (as low as reasonably achievable) concept when compared to the alternate approach. In addition, the removal and reinstallation of insulation is often a critical path activity which directly affects the duration of refueling outages, therefore placing a financial hardship on the plant.

The concern that led to the Section XI requirement for removal of insulation on bolted connections, while performing pressure testing and VT-2 examinations, is that a borated-water leak from a bolted connection could cause corrosion of the bolting materials. Thus, the structural integrity of a safety-related system could be compromised by a small leak that could be unnoticed if the insulation remains in place during the pressure testing and VT-2 examination.

This relief request addresses the concern that a borated water leak at a bolted connection could go undetected. It recognizes that if a bolted connection leaks for a considerable amount of time, the leakage would be evident, even through the insulation. The proposed alternate examination would allow a VT-2 inspection to be performed, with insulation on, at Normal Operating Pressure/Normal Operating Temperature (NOP/NOT) after sustained system operation. The proposed alternate examination is supported by the following:

(a) Even a small leak will be visible through insulation if enough time passes.

(b) If an inspection is performed at NOP/NOT after sustained system operation and prior to any clean up activities (i.e. upon entering a refueling outage) any leakage would be evident.

(c) If insulation is removed to allow maintenance to be performed, a visual examination will be performed with the insulation removed in accordance with hydrostatic relief request 3.

E. ALTERNATIVE EXAMINATIONS OR TESTS:

The following alternate rules for the pressure testing and VT-2 visual examination of pressure retaining bolting will be used:

(a) A system pressure test and VT-2 visual examination shall be performed with insulation installed at NOP/NOT after sustained system operation and prior to any clean up activities. If any evidence of leakage is detected, the insulation will be removed and any evidence of leakage shall be evaluated in accordance with the requirements specified in Indian Point 3 hydrostatic relief request RR 3-1.

F. JUSTIFICATION FOR REQUESTING RELIEF

Compliance with the specified requirement would result in hardship or unusual difficulty without a compensating increase in the level of quality and safety. The proposed alternative provides an acceptable level of quality and safety since leakage from a bolted connection would be detectable through insulation after sustained system operation. The proposed alternative inspection would be performed prior to any clean up activities to ensure that any evidence of leakage in the surrounding area (including floor areas or equipment surfaces located underneath the components) would be detected.

G. IMPLEMENTATION SCHEDULE:

The requirements as specified in this relief request will be incorporated into the IP3 Inservice Inspection Program during the 3rd Ten-Year Interval.

H. ATTACHMENTS TO THE RELIEF:

None

I. STATUS

Submitted.

Indian Point #3
Third Inservice Inspection Interval
Hydrostatic Relief Request No. 3-5 (H), Rev. 1

A. ARTICLE IDENTIFICATION:

IWA-5000, Section IWA-5250(a)(2)

Class: 1, 2 and 3
System: All

B. EXAMINATION REQUIREMENTS:

ASME Section XI 1989 Edition, IWA-5250,

(a) The source of leakages detected during the conduct of a system pressure test shall be located and evaluated by the owner for corrective measures as follows:

(2) If leakage occurs at a bolted connection, the bolting shall be removed, VT-3 visually examined for corrosion, and evaluated in accordance with IWA-3100.

C. RELIEF REQUESTED:

Indian Point 3 requests relief from all requirements of IWA-5250(a)(2). Pursuant to 10CFR50.55a(a)(3)(i) relief is requested on the basis that the proposed alternatives discussed in this request for relief would provide an acceptable level of quality and safety.

D. BASIS FOR RELIEF:

Relief is requested from removal and visual inspection of bolting at a bolted connection for leakage discovered during a system pressure test when the bolting was replaced or inspected and found satisfactory during the same outage as the pressure test. Removal and reinspection of bolting replaced or inspected during the same outage will not add to the assurance of pressure boundary integrity, because there is insufficient time for any corrosion mechanism to degrade the bolting condition.

A similar relief request has been approved by the NRC for the Indian Point 2 Nuclear Plant.

E. ALTERNATIVE EXAMINATIONS OR TESTS:

None

F. JUSTIFICATION FOR REQUESTING RELIEF

Since there is no safety or quality benefit from re-examining new or recently inspected bolting, as described above, granting of this relief will not decrease the overall level of quality and safety.

G. IMPLEMENTATION SCHEDULE:

The requirements as specified in this relief request will be incorporated into the IP3 Inservice Inspection Program during the 3rd Ten-Year Interval.

H. ATTACHMENTS TO THE RELIEF:

None

This Page Intentionally Left Blank

INDIAN POINT UNIT 3
THIRD INSERVICE INSPECTION INTERVAL
RELIEF REQUEST NO. 3-6 (I), Rev. 0

A. SYSTEM / COMPONENT(s) FOR WHICH RELIEF IS REQUESTED

Components with single side access, subject to ultrasonic examination with Appendix VIII to the 1995 Edition with 1996 Addenda of ASME Section XI.

B. CODE REQUIREMENTS

10CFR50.55a(b)(2)(xv)(A), 10CFR50.55a(b)(2)(xv)(G), and 10CFR50.55a(b)(2)(xvi), define new requirements for coverage and qualification demonstration. These requirements affect both piping and RPV examinations.

C. CODE REQUIREMENTS FROM WHICH RELIEF IS REQUESTED

The PDI Program is in agreement with the Final Rule regarding single side access for piping. The Rule requires that if access is available the weld shall be scanned in each of the four directions (parallel and perpendicular to the weld where required. Coverage credit may be taken for single side exams on ferritic piping. However, for austenitic piping, a procedure must be qualified with flaws on the inaccessible side of the weld.

Previously issued RPV qualifications do not meet the new requirements for single side access, that are listed in the Final Rule, 10 CFR 50.55a(b)(2)(xv)(G)(1), (2), and 10 CFR 50.55a(b)(2)(xvi)(A).

D. BASIS FOR RELIEF

Current technology is not capable of reliably detecting or sizing flaws on the far side of an austenitic weld, for configurations common to US nuclear applications. In lieu of a full single side qualification, PDI offers a best effort approach, which demonstrates that the best available technology is applied. PDI Performance Demonstration Qualification Summary (PDQS) austenitic piping certificates list the limitation that single side examination is performed on a best efforts basis. This will require that the far side of the weld, which can only be accessed from one side, must be listed as an area of no coverage

RPV qualifications have been performed which met all requirements of the ASME Code and the PDI Program at the time of qualification. Some of these qualifications list a single side capability. However, these demonstrations do not meet the new requirements for single side access, qualifications that are listed in the Final Rule, 10 CFR 50.55a(b)(2)(xv)(G)(1), (2), and 10 CFR 50.55a(b)(2)(xvi)(A). Utilities and PDQS certificate holders, which list single side qualifications, will be notified of these differences. New certificates will be issued as amended single side procedures are demonstrated and qualified. There are currently no qualified procedures.

E. ALTERNATIVE EXAMINATIONS

As qualified through the Performance Demonstration Initiative, the best available techniques will be used from the accessible side of the weld

F. PERIOD FOR WHICH RELIEF IS REQUESTED

Relief is requested for the third inspection interval, July 21, 2000 through July 20, 2009.

G. ATTACHMENT TO RELIEF

None

H. USNRC RESPONSE

Submitted

This Page Intentionally Left Blank

Indian Point 3
Third Inservice Inspection Interval
Relief Request No. 3-7 (I), Rev. 0

A. ARTICLE IDENTIFICATION:

Article IWA-4000	Repair Procedures
Article IWA-6000	Records and Reports
Article IWA-7000	Replacements

B. CODE REQUIREMENTS:

IWA-4800 The records required by IWA-6000 shall be completed for all repairs.

IWA-7520 (8) Completed Owner's Report for Repairs or Replacements, Form NIS-2

IWA-6210 (c) The Owner shall prepare inservice inspection summary report for Class 1 and 2 pressure retaining components and their supports.

IWA-6220 (c) Inservice Inspection summary reports shall be required at the completion of each inspection conducted during a refueling outage. Examinations, tests, replacements, and repairs conducted since the preceding summary report shall be included.

IWA-6220 (d) Each summary report shall contain the following:

(2) Owner's Report for Inservice Inspection, Form NIS-1

(3) Owner's Report for Repair or Replacement, Form NIS-2

IWA-6230 Within 90 days of the completion of the inservice inspection conducted during each refueling outage, the Owner shall file ISI Summary Reports with the enforcement and regulatory authorities.

C. RELIEF REQUESTED:

Relief is requested from the following:

1. Preparation of the Owner's Report for Inservice Inspection, Form NIS-1

2. Preparation of the Owner's Report for Repair or Replacement, Form NIS-2.

3. Submittal of the summary report within 90 days following completion of the inservice inspection conducted during each refueling outage.

D. BASIS FOR RELIEF:

Pursuant to 10 CFR 50.55a(a)(3)(ii), relief is requested on the basis that the specified requirements would result in hardship or unusual difficulty without a compensating increase in the level of quality and safety.

NYPA-IP3 feels that the summary report required by IWA-6000 does not contain the information necessary to assure compliance with Code requirements, and therefore does not provide a compensation increase in the quality and/or safety at IP3.

The summary report does not furnish evidence of compliance with the ASME Boiler and Pressure Vessel Code, Section XI, Inspection Program B, percentage requirements as mandated by IWB-2412, IWC-2412, and IWD-2412.

Class 3 components are excluded from the summary report Submittal.
Both a Final Report and Summary Report must be prepared, reviewed and approved in order to comply with Sub-articles IWA-6220 and IWA-6310 respectively.

The preparation, review, approval and certification of each record and report, within the time frame of 90 days following completion of each refueling outage, increases substantially the costs associated with inservice inspection activities, and puts an unreasonable time constraint on IP3 without an increase in assurance of Code compliance.

A similar relief request was approved for use at NYPA's James A. FitzPatrick Nuclear Power Plant. Refer to the NRC letter on JAF relief requests dated 11/25/98.

E. ALTERNATIVE EXAMINATIONS OR TESTS:

As an alternate to the requirements of IWA-4800, IWA-6000, and IWA-7528(8), JAF will implement ASME Code Case N-532, "Alternative Requirements to Repair and Replacement Documentation Requirements and Inservice Summary Report Preparation and Submission as Required by IWA-4000 and IWA-6000[1], Division 1", (Note: 1 - ASME 1992 Edition Section XI).

F. IMPLEMENTATION SCHEDULE:

The Alternate Examination requirements of ASME Code Case N-532 will be incorporated into IP3 Inservice Inspection Program during the 3rd ten-year Interval.

G. JUSTIFICATION FOR RELIEF:

NYPA-IP3 feels that the summary report required by IWA-6000 does not contain the information necessary to assure compliance with Code requirements, and therefore does not provide a compensation increase in the quality and/or safety at IP3. The summary report does not furnish evidence of compliance with the ASME Boiler and Pressure Vessel Code, Section XI, Inspection Program B, percentage requirements as mandated by IWB-2412, IWC-2412, and IWD-2412. In addition, Class 3 components are excluded from the summary report Submittal.

The preparation, review, approval and certification of each record and report, within the time frame of 90 days following completion of each refueling outage, increases substantially the costs associated with inservice inspection activities, and puts an unreasonable time constraint on IP3 without an increase in assurance of Code compliance and without a compensating increase in the level of quality and safety.

Pursuant to 10 CFR 50.55a(a)(3)(ii), relief is requested on the basis that the specified requirements would result in hardship or unusual difficulty without a compensating increase in the level of quality and safety.

A similar relief request was approved for use at NYPA's James A. FitzPatrick Nuclear Power Plant. Refer to the NRC letter on JAF relief requests dated 11/25/98.

H. ATTACHMENTS TO THE RELIEF:

ASME Code Case N-532, "Alternative Requirements to Repair and Replacement Documentation Requirements and Inservice Summary Report Preparation and Submission as Required by IWA-4000 and IWA-6000, Division 1".

I. USNRC RESPONSE

Status - submitted

Approval Date: December 12, 1994
See Numeric Index for expiration and any reaffirmation dates.

Case N-532
Alternative Requirements to Repair and Replacement Documentation Requirements and Inservice Summary Report Preparation and Submission as Required by IWA-4000 and IWA-6000[1]
Section XI, Division 1

Inquiry: What alternatives may be used to the requirements of IWA-4910(d) and IWA-6210(e) for completion of Form NIS-2 following repair or replacement, and IWA-6210(c) and (d), IWA-6220, IWA-6230(b), (c), and (d), and IWA-6240(b) for preparation and submittal of the inservice summary report and Form NIS-1?

Reply: It is the opinion of the Committee that as an alternative to the requirements of IWA-4910(d), IWA-6210(c), (d), and (e), IWA-6220, IWA-6230(b), (c), and (d), and IWA-6240(b), the following provisions may be used. This Case shall be utilized at least until the end of the inspection period in which it was invoked.

1.0 CERTIFICATION OF THE REPAIR OR REPLACEMENT

(a) The Owner's Repair/Replacement Program shall identify use of this Case.

(b) A Repair/Replacement Plan shall be prepared in accordance with IWA-4140[1], and shall be given a unique identification number.

(c) Upon completion of all required activities associated with the Repair/Replacement Plan, the Owner shall prepare a REPAIR/REPLACEMENT CERTIFICATION RECORD, FORM NIS-2A.

(d) Form NIS-2A shall be presented to the Inspector for certification.

(e) The completed Form NIS-2A shall be maintained by the Owner.

(f) The Owner shall maintain an index of Repair/Replacement Plans in accordance with IWA-6340. The index shall identify the identification number required by (b) above the inspection interval and period during which each repair or replacement was completed.

2.0 OWNER'S ACTIVITY REPORT PREPARATION AND SUBMITTAL

An OWNER'S ACTIVITY REPORT FORM OAR-1 shall be prepared and certified upon completion of each refueling outage. Each Form OAR-1 prepared during an inspection period shall be submitted following the end of the inspection period. Each Form OAR-1 shall contain the following:

(a) Abstract of applicable examinations and tests with the information and format of Table 1.

(b) A listing of item(s) with flaws or relevant conditions that required evaluation to determine acceptability for continued service, whether or not the flaw or relevant condition was discovered during a scheduled examination or test. The listing shall provide the information in the format of Table 2.

(c) Abstract for repairs, replacements and corrective measures performed, which were required due to an item containing a flaw or relevant condition that exceeded IWB-3000, IWC-3000, IWD-3000, IWE-3000, IWF-3000, or IWL-3000 acceptance criteria; even though the discovery of the flaw or relevant condition that necessitated the repair, replacement or corrective measure, may not have resulted from an examination or test required by this Division. If acceptance criteria, for a particular item is not specified in this Division, the provisions of IWA-3100(b) shall be used to determine which repairs, replacements, and corrective measures are required to be included in the abstract. The abstract shall provide the information in the format of Table 3.

[1] All references to IWA-4000 and IWA-6000 used in this Case refer to the 1992 Edition.

FORM NIS-2A REPAIR/REPLACEMENT CERTIFICATION RECORD

OWNER'S CERTIFICATE OF CONFORMANCE

I certify that the _____ represent by Repair/Replacement
repair or replacement

Plan number _____ conforms to the requirements of Section XI.

Type Code Symbol Stamp _____

Certificate of Authorization No. _____ Expiration Date _____

Signed _____ Date _____
Owner or Owner's Designee, Title

CERTIFICATE OF INSERVICE INSPECTION

I, the undersigned, holding a valid commission issued by the National Board of Boiler and Pressure Vessel Inspectors and the State or Province of _____ and employed by _____ of _____ have inspected the items described in Repair/Replacement Plan number _____ during the period _____ to _____, and state that to the best of my knowledge and belief, the Owner has performed all the activities described in the Repair/Replacement Plan in accordance with the requirements of Section XI.

By signing this certificate neither the Inspector nor his employer makes any warranty, expressed or implied, concerning the activities described in the Repair/Replacement Plan. Furthermore, neither the Inspector nor his employer shall be liable in any manner for any personal injury or property damage or loss of any kind arising from or connected with this inspection.

_____ Commissions _____
Inspector's Signature — National Board, State, Province, and Endorsements

Date _____

This form (E00126) may be obtained from the Order Dept., ASME, 22 Law Drive, Box 2300, Fairfield, NJ 07007-2300.

FORM OAR-1 OWNER'S ACTIVITY REPORT

Report Number _____

Owner _____
(Name and Address of Owner)

Plant _____
(Name and Address of Plant)

Unit No. _____ (If applicable) Commercial service date _____ Refueling outage no. _____

Current inspection interval _____
(1st, 2nd, 3rd, 4th, other)

Current inspection period _____
(1st, 2nd, 3rd)

Edition and Addenda of Section XI applicable t the inspectin plan _____

Date and revision of inspection plan _____

Edition and Addenda of Section XI applicable to repairs and replacements, if different than the inspection plan _____

_____

CERTIFICATE OF CONFORMANCE

I certify that the statements made in this Owner's Activity Report are correct, and that the examinations, tests, repairs, replacements, evaluations, and corrective measures represented by this report conform to the requirements of Section XI.

Certificate of Authorization No. _____ (If applicable) Expiration Date _____

Signed _____ Owner or Owner's Designee, Title Date _____

CERTIFICATE OF INSERVICE INSPECTION

I, the undersigned, holding a valid commission issued by the National Board of Boiler and Pressure Vessel Inspectors and the State or Province of _____ and employed by _____ of _____ have inspected the items described in this Owner's Activity Report, during the period _____ to _____, and state that to the best of my knowledge and belief, the Owner has performed all activities represented by this report in accordance with the requirements of Section XI.

By signing this certificate neither the inspector nor his employer makes any warranty, expressed or implied, concerning the examinations, tests, repairs, replacements, evaluations and corrective measures described this report. Furthermore, neither the inspector nor his employer shall be liable in any manner for any personal injury or property damage or a loss of any kind arising from the connected with this inspection.

_____ Inspector's Signature Commissions _____ National Board, State, Province, and Endorsements

Date _____

This form (E00127) may be obtained from the Order Dept., ASME, 22 Law Drive, Box 2300, Fairfield, NJ 07007-2300.

SAMPLE

TABLE 1
ABSTRACT OF EXAMINATIONS AND TESTS

Examination Category	Total Examinations Required for The Interval	Total Examinations Credited for This Period	Total Examinations Credited (%) For The Period	Total Examinations Credited (%) To Date for The Interval	Remarks

TABLE 2
ITEMS WITH FLAWS OR RELEVANT CONDITIONS THAT REQUIRED EVALUATION FOR CONTINUED SERVICE

Examination Category	Item Number	Item Description	Flaw Characterization (IWA-3300)	Flaw or Relevant Condition Found During Scheduled Section XI Examination or Test (Yes or No)

TABLE 3
ABSTRACT OF REPAIRS, REPLACEMENTS, OR CORRECTIVE MEASURES REQUIRED FOR CONTINUED SERVICE

Code Class	Repair, Replacement, or Corrective Measure	Item Description	Description of Work	Flaw or Relevant Condition Found During Scheduled Section XI Examination or Test (Yes/No)	Date Completed	Repair/ Replacement Plan Number

This Page Intentionally Left Blank

INDIAN POINT UNIT 3
THIRD INSERVICE INSPECTION INTERVAL
RELIEF REQUEST NO. 3-8, Rev. 0, 07/17/00

A. SYSTEM / COMPONENT(s) FOR WHICH RELIEF IS REQUESTED

All components subject to ultrasonic examination with Appendix VIII to the 1995 Edition with 1996 Addenda of ASME Section XI.

B. CODE REQUIREMENTS

Sub-article IWA-2300 requires qualification of NDE personnel to CP-189, 1991 Edition, and the additional requirements of Division 1.

C. CODE REQUIREMENTS FROM WHICH RELIEF IS REQUESTED

Relief is requested from the provisions of Sub-article IWA-2300, Qualification of Nondestructive Examination Personnel." This requires that personnel performing NDE shall be qualified and certified using a written practice prepared in accordance with CP-189, and the additional requirements of Division 1.

D. BASIS FOR RELIEF

10 CFR 50.55a was amended in the Federal Register (Volume 64, No. 183 dated September 22, 1999) to require the use of the 1995 Edition, with the 1996 Addenda for Appendix VIII qualification requirements. This also imposes the requirements of IWA and Appendix VII of the 1995 Edition, with 1996 Addenda of Section XI. This includes Sub-article IWA-2300, which requires a written practice prepared in accordance with CP-189, 1991 Edition, as amended by the requirements of Division 1.

This requires development, implementation, and to the extent possible consolidation, of multiple certification requirements into one or more written practices. This is needed to address the various NDE certification requirements contained in SNT-TC-1A, for non-Appendix VIII applications and CP-189, for Appendix VIII applications. These are further modified by IWA-2300 and Appendix VII, as amended by respectively the 1989 Edition of Section XI or the 1995 Edition with 1996 Addenda of Section XI.

Relief is requested in accordance with 10 CFR 50.55a(a)(3)(ii) to continue basing all requirements for initial certification and recertification of ultrasonic examination personnel on the 1989 Edition of Section XI. This includes use of ASNT SNT-TC-1A, 1984, as amended by IWA-2300 and Appendix VII of Section XI, 1989 Edition.

A comparison of the implementation requirements for Appendix VIII examinations using the 1984 Edition of SNT-TC-1A as modified by IWA-2300 and Appendix VII of the 1989 Edition of Section XI with the 1991 Edition of CP-189 as modified by IWA-2300 and Appendix VII of the 1995 Edition and 1996 Addenda of Section XI is considered to be unwieldy and subjective because of their myriad differences. Therefore, three less complex comparisons of technically significant items are attached. One compares IWA-2300 from the 1995 Edition with the 1996 Addenda to the 1989 Edition. Another compares Appendix VII to the 1995 Edition with the 1996 Addenda to the 1989 Edition. The last compares the 1991 Edition of CP-189 with the 1984 Edition of SNT-TC-1A as modified by Appendix VII.

As written, there are major differences between CP-189 and SNT-TC-1A. However, as illustrated in the comparisons, these are minimized by the moderating effects of the applicable IWA-2300 requirements and especially the Appendix VII requirements. Compliance with the specified requirements would result in hardship or unusual difficulty without a compensating increase in the level of quality and safety. For example, the 1995 Edition with the 1996 Addenda requires near vision acuity of 20/25 or greater Snellen fraction while the 1989 Edition requires Jaeger No. 1 print. Development and administration of a second or consolidated program would not enhance safety or quality and would serve as a burden, particularly in developing an additional written practice, tracking of certifications, duplication of paperwork, etc. This duplication would also apply to NDE vendor programs.

Current certifications are not affected, paragraph IWA-2310 in the 1995 Edition with 1996 Addenda states that certifications based on SNT-TC-1A are valid until recertification is required.

E. PROPOSED ALTERNATE

Initial certification and recertification of NDE personnel shall continue to be conducted in accordance with the requirements contained in the 1989 Edition of ASME Section XI.

F. IMPLEMENTATION SCHEDLUE

Relief is requested for the 3rd Ten-Year Interval, July 21, 2000 thru July 20, 2009.

G. ATTACHMENTS TO THE RELIEF

Comparison of the Qualification and Certification Requirements of Ultrasonic Examiners Certified to CP-189, 1991, and SNT-TC-1A, 1984, as modified by IWA and Appendix VII of 1989 and 95/96 Edition of Section XI Respectively.

H. USNRC RESPONSE:

Relief submitted

COMPARISON OF THE QUALIFICATION AND CERTIFICATION REQUIREMENTS OF ULTRASONIC EXAMINERS CERTIFIED TO CP-189, 1991, AND SNT-TC-1A, 1984, AS MODIFIED BY IWA AND APPENDIX VII OF 989 AND 95/96 EDITION OF SECTION XI RESPECTIVELY

The following is a summary of pertinent technical aspects of the implementation requirements contained in Subparagraph IWA-2300 to the two Editions of ASME Section XI identified below.

The comparison is complicated because some of the requirements may be Modified or omitted, simply because they are defined in another location or by another document. Several requirements, such as those for limited certification, differ somewhat but the differences are not considered technically relevant and they are not detailed in this technical comparison. These complications are representative of the increased burden when administering more than one program or a program based on varying requirements.

1995 Ed with 1996 Add of Section XI	1989 Edition of Section XI
IWA-2310 – Written practice is prepared using ANSI/ASNT "Standard" CP-189, 1991 Edition. Certifications based on SNT-TC-1A remain valid until recertification.	IWA-2310 – Written practice is prepared using ASNT "Recommended Practice" SNT-TC-1A, 1984 Edition. Certifications based on earlier editions remain valid until recertification.
IWA-2311 – The written practice shall specify the duties and responsibilities of the Principle Level III.	
IWA-2312 – NDE methods listed in CP-1989 – Similar to 1989 IWA-2311	IWA-2311 – NDE methods listed in SNT-TC-1A – Similar to 95/96 IWA 2312
IWA-2313 – NDE methods not listed in CP-189 – Similar to 1989 IWA-2312	IWA-2312 – NDE methods not listed in SNT-TC-1A – Similar to 1989 IWA-2313
IWA-2314 – Level I and II recertified every 3 years, Level III every 5 years by examination per CP-189. ASNT Level III not required	IWA-2313 – Level I and II recertified every 3 years, Level III every 5 years by examination per SNT-TC-1A.
IWA-2321 – Snellen 20/25 using lower case letters with a known pre-measured height (see IWA-2322). Per Administered in accordance with a procedure, and by personnel, approved by an NDE Level III designated by the employer.	IWA-2321- Jaeger number 1 or equivalent, conducted by personnel qualified to conduct the examinations
IWA-2322 – Requires use of 10x magnifier to measure height of letters.	

IWA-2323 – Level III qualifications evaluated by Basic, Method, Specific, and Practical examinations and the Demonstration examination (Level II Practical)	IWA-2322 – Level III qualifications determined by Basic, Method, and Specific examinations per SNT-TC-1A. (Demonstration examination would be required by Section XI, Appendix VIII)
CP-189 General, Specific and Practical examinations administered and graded by a Level III.	IWA-2323 – Level I and II qualifications determined by General and Specific examinations, and a Practical hands-on examination administered by a Level III.
95/96 Appendix VII is similar to 1989 Appendix VII (See detailed comparison following).	IWA-2324 – Defines requirements for administration of examinations. This is Modified by Appendix VII.
IWA-2330 – Level I responsibilities. Identical to 1989 IWA-2330	IWA-2330 – Level I responsibilities. Identical to 95/96 IWA-2330
IWA-2340 – Level III education. Similar to 1989 IWA-2340	IWA-2340 – Level III education. Similar to 95/96 IWA-2340
IWA-2350 – Defines limited certification. Provides more definition than 1989.	IWA-2350 – Defines limited certification requirements.
IWA-2360 – Allows certification directly to Level II. Defines additional Level III responsibilities.	Appendix VII allows certification directly to Level II. Defines similar Level III responsibilities.
IWA-2370 – Contains experience requirements for Level II candidates.	1989 Appendix VII contains requirements that are more stringent.

The following is a summary of pertinent technical aspects of the implementation requirements contained in Subparagraph IWA-2300 to the two Editions of ASME Section XI identified below.

The comparison is complicated because some of the requirements may be Modified or omitted, simply because they are defined in another location or by another document. Several requirements, such as those for limited certification, differ somewhat but the differences are not considered technically relevant and they are not detailed in this technical comparison. These complications are representative of the increased burden when administering more than one program or a program based on varying requirements.

95/96 APPENDIX VII	1989 APPENDIX VII
VII-1000 – Scope – Modifies the requirements of IWA-2300 for Ultrasonic examiners	VII-1000 - Identical to 95/96
VII-2000 – Qualification Levels – Identifies 5 qualification Levels as defined in CP-189	VII-2000 – essentially the same. Defines NDE Instructor qualification since it is not included in SNT-TC-1A.
VII-3000 – Written Practice – Defines the written practice, including the definition of an "outside agency" as an independent company or a functionally independent organization within the same company.	VII-3000 Identical to 95/96 except "outside agency" is not defined.
VIII-4000 –	Qualification Requirements
CP-189 contains no simultaneous experience provisions.	Table VII-4110-1 states the simultaneous experience provision of SNT-TC-1A is not applicable.
Paragraph VII-4223 requires previously qualified individuals to meet the requirements for training	Both Appendices in paragraph VII-4300 state that to be considered for examination the Level I, II, and III candidates shall have successfully completed the training required in VII-4200.
Paragraph VII-4240 states that no examination is required for the annual retraining.	
Paragraph VII-4310 (a) states that a random selection process must be controlled by the written practice so no individual takes the same examination more than once.	

Paragraph VII-4310 (b) allows the use of "grading units" to produce a specimen bank for the practical examination.	
Paragraph VII-4330 (a) Level III examinations per IWA-2300, Basic, Method, Specific, Practical, Demonstration, contains rules for Level II practical examination. An Appendix VIII practical is acceptable.	While the 1989 Appendix VIII contains no requirements for a practical examination, it would be required for the mandatory Appendix VIII.
Paragraph VII-4330 (b) allows recertification of Level III personnel using only the Method and Specific examinations.	IWA-2313 requires recertification using Basic, Method, and Specific written examinations
Not addressed	VII-6000 – Defines duties of the ANII

The following is a summary of pertinent technical aspects of the implementation requirements contained in CP-189, 1991; and SNT-TC-1A, 1984.

Comparisons are not detailed in those areas where CP-189 is modified by the requirements of Appendix VII. Please note that the word "should" typically identifies what is considered a requirement in SNT-TC-1A, while CP-189 typically uses the word "shall". Industry practice is to treat SNT-TC-1A recommendations as requirements. Several paragraphs are identified as similar. This is subjective. For example, while SNT-TC-1A does not specifically require suspension of an examiners certification for a lapsed vision examination, it is considered to be implied, and it is industry practice to do so.

CP-189	SNT-TC-1A
1.0 – Scope – CP-189 is a standard that establishes the minimum requirements.	1.0 – Scope – SNT-TC-1A is a recommended practice establishing guidelines.
2.0 – Definitions – More inclusive (19 terms) and more concise. Some Modified by Appendix VII.	2.0 – Definitions – Less inclusive (7 terms)
3.0 – Levels	Of Qualification
3.1 – Classification	Modified by Appendix VII
3.2 – Level III	4.3 (3) – Similar to CP-189
3.3 – Level II	4.3 (2) – Similar to CP-189
3.4 – Level I	Modified by Appendix VII
3.5 – Trainee	4.2 – Similar to CP-189
3.6 – NDE Instructor	Modified by Appendix VII
4.0 Qualification	Requirements
4.1 – Training	Modified by Appendix VII
4.2 – Experience	Modified by Appendix VII
4.3 – Previous Training and Experience	Modified by Appendix VII
4.4 – NDT Instructor	Modified by Appendix VII
4.5 – Outside services	Modified by Appendix VII
5.0 – Qualification	And Certification
5.1 – Procedure	Modified by Appendix VII
5.2 – Procedure requirements	Modified by Appendix VII
5.3 – Approval – "written practice" approved by Level III	Modified by Appendix VII – Requires that "written practice" specify responsibilities.
6.0 Examinations	
6.1 – Vision	Modified by IWA-2300
6.2 – Level III Examination	Modified by Appendix VII
6.3 – Level I and II Examination	Modified by Appendix VII
6.4 – Administration and grading	Modified by Appendix VII
6.5 – Reexamination	Modified by Appendix VII

6.6 – Administration of Examinations – prohibits one's self or one's subordinate from preparing or administering an examination.	Not specifically addressed
7.0 Expiration, Suspension, Reinstatement of Employer	Revocation, and Certification
7.1 – Expiration	Similar to CP-189
7.2 – Suspension	Similar to CP-189
7.3 – Revocation	Similar to CP-189
7.4 – Reinstatement	Similar to CP-189
8.0 Employer	Recertification
8.1 – NDT Level I and II	Modified by Appendix VII
8.2 – NDT Level III	Modified by Appendix VII
9.0	Records
9.1 – Responsibility for Documentation	Modified by Appendix VII
9.2 – Contents of Certification Record	Modified by Appendix VII

This Page Intentionally Left Blank

INDIAN POINT UNIT 3
THIRD INSERVICE INSPECTION INTERVAL
RELIEF REQUEST NO. 3-9 (I), Rev. 0, 07/17/00

A. SYSTEM / COMPONENT(s) FOR WHICH RELIEF IS REQUESTED

Class: 1 Reactor Pressure Vessel
Pressure-retaining Nozzle-to-Vessel Welds / Code Cat. B-D, Item No. B3.90

B. EXAMINATION REQUIREMENT

Rules for Inservice Inspection of Nuclear Power Plant Components, Section XI, 1989 Edition, Examination Category B-D Full Penetration Welds of Nozzles in Vessels. Code Item B3.90, Figure IWB-2500-7 (a) thru (d).

ASME Section V, 1989 Edition, Article 4, Paragraphs; T-441.3.2.5 *Angle Beam Scanning*, T-3.2.6 *Scanning for Reflectors Oriented Parallel to the Weld*, and T-441.3.2.7 *Scanning for Reflectors Oriented Transverse to the Weld.*

C. RELIEF REQUESTED

Pursuant to 10 CFR 50.55a(a)(3)(i), Indian Point 3 requests to use the alternative requirements of Code Case N-613 in lieu of the requirements of ASME Section XI Figures IWB-2500-7 (a) thru (d). IP3 also request to use this Code Case in lieu of the requirements of ASME Section V, Article 4 for the performance of the required volumetric examinations as specified in Table IWB-2500-1 Category B-D of the 1989 Edition of ASME Section XI.

D. BASIS FOR RELIEF

The 1989 Edition of the American Society of Mechanical Engineers Boiler and Pressure Vessel Code, Section XI, Rules for In-Service Inspection of Nuclear Power Plant Components requires volumetric examination in accordance with the requirements of Figures IWB-2500-7 (a) thru (d). This Code edition also invokes the examination requirements of Appendix I, Article I-2000 which reference ASME Section V, Article 4 that essentially prescribes twenty (20) year old examination methodology. IP3 will perform the required examinations using the methodology of Code Case N-622 as presented in Relief Request 3-20 (I). This will provide added assurance that the Reactor Vessel welds shall remain free of service related flaws thus enhancing quality and ensuring plant safety and reliability.

The examination volume for the Reactor Vessel pressure retaining nozzle-to-vessel welds extend far beyond the weld into the base metal, and is unnecessarily large. This extends the examination time significantly while provides no net increase in safety, as the area being examined is a base metal region which is not prone to in-service cracking and had been extensively examined before the vessel was put into service and examined again during the first Inservice Interval.

The implementation of Code Case N-613 is also expected to reduce on-vessel examination time by as much as 12 hours, which would result in significant cost savings and reduced personnel radiation exposure. Similar relief has been granted to FP&L and to FENCO (Davis-Besse).

E. ALTERNATIVE EXAMINATIONS:

1) Perform examinations in accordance with Code Case N-613

2) Perform examinations in accordance with ASME Code, Section XI, Div. 1, 1995 Edition, 1996 Addenda, Appendix VIII, Supplement VII

F. JUSTIFICATION FOR RELIEF

The proposed alternative to perform the volumetric examination of the Pressure retaining Nozzle-to-Vessel welds in accordance with the requirements of Code Case N-613 would provide an acceptable level of quality and safety.

G. IMPLEMENTATION SCHEDULE:

Relief is requested for the 3rd 10-Year Interval , July 21, 2000 thru July 20, 2009

H. ATTACHMENTS TO THE RELIEF:

Code Case N-613

CASES OF ASME BOILER AND PRESSURE VESSEL CODE

Approval Date: July 30, 1998

See Numeric Index for expiration and any reaffirmation dates.

Case N-613
Ultrasonic Examination of Full Penetration Nozzles in Vessels, Examination Category B-D, Item No's. B3.10 and B3.90, Reactor Vessel-To-Nozzle Welds, Fig. IWB-2500-7(a), (b), and (c) Section XI, Division 1

Inquiry: What alternatives to the examination requirements of Section XI, Appendix I and Section V, Article 4 are permissible when performing ultrasonic examination of reactor vessel-to-nozzle welds?

Reply: It is the opinion of the Committee that ultrasonic examination of Category B-D nozzles may be conducted using techniques designed for detection and sizing of surface and subsurface flaws within the examination volume (A-B-C-D-E-F-G-H), oriented in a plane normal to the vessel inside surface and parallel to the weld for Figs. 1 and 2, and oriented in a plane normal to the nozzle inside surface and parallel to the weld for Fig. 3.

CASE (continued)

N-613

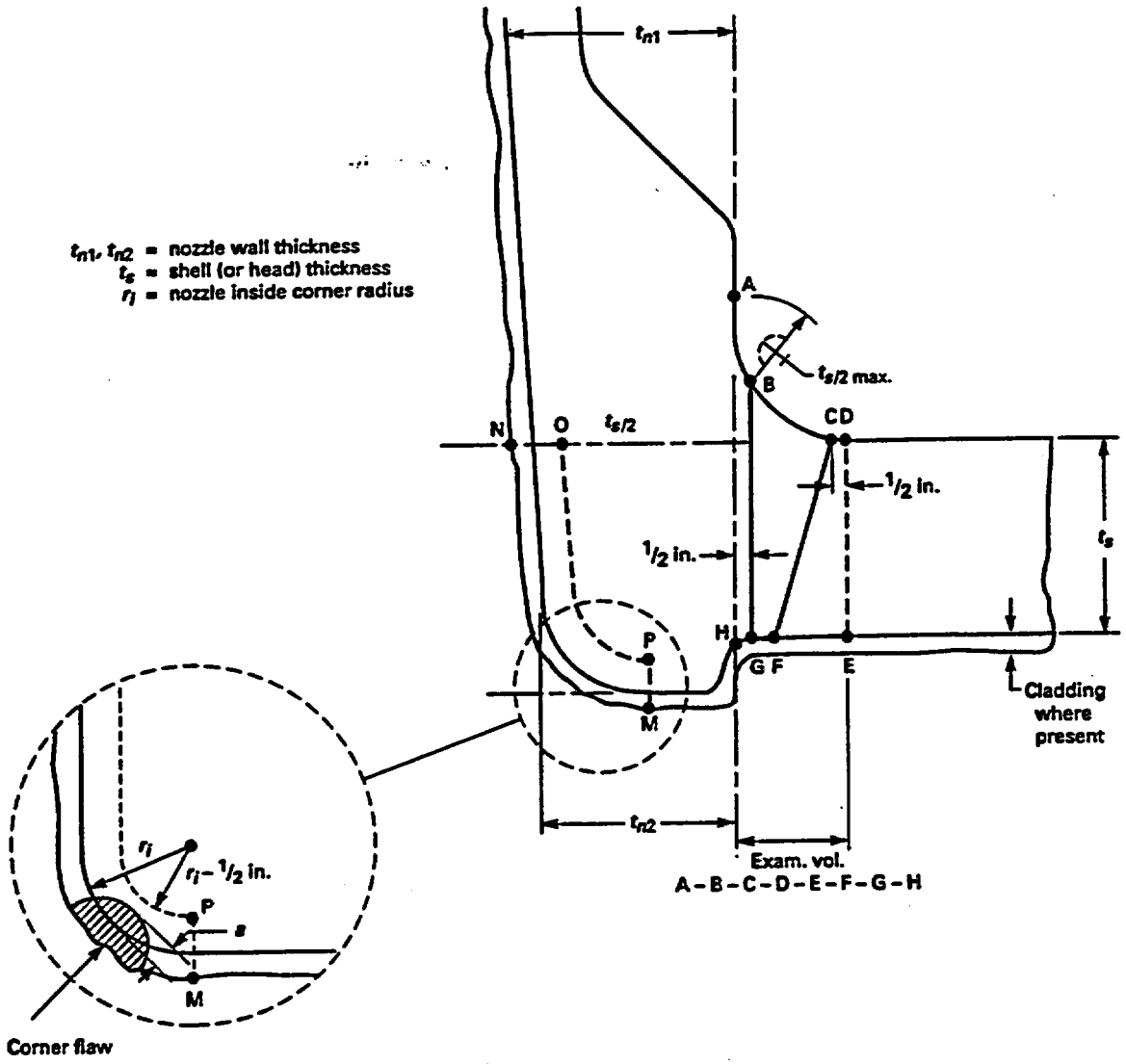

EXAMINATION REGION (Note (1))	EXAMINATION VOLUME (Note (2))
Shell (or head) adjoining region	C-D-E-F
Attachment weld region	B-C-F-G
Nozzle cylinder region	A-B-G-H
Nozzle inside corner region	M-N-O-P

NOTES:
(1) Examination regions are identified for the purpose of differentiating the acceptance standards in IWB-3512.
(2) Examination volumes may be determined either by direct measurements on the component or by measurements based on design drawings.

FIG. 1 NOZZLE IN SHELL OR HEAD
(Examination Zones in Barrel Type Nozzles Joined by Full Penetration Corner Welds)

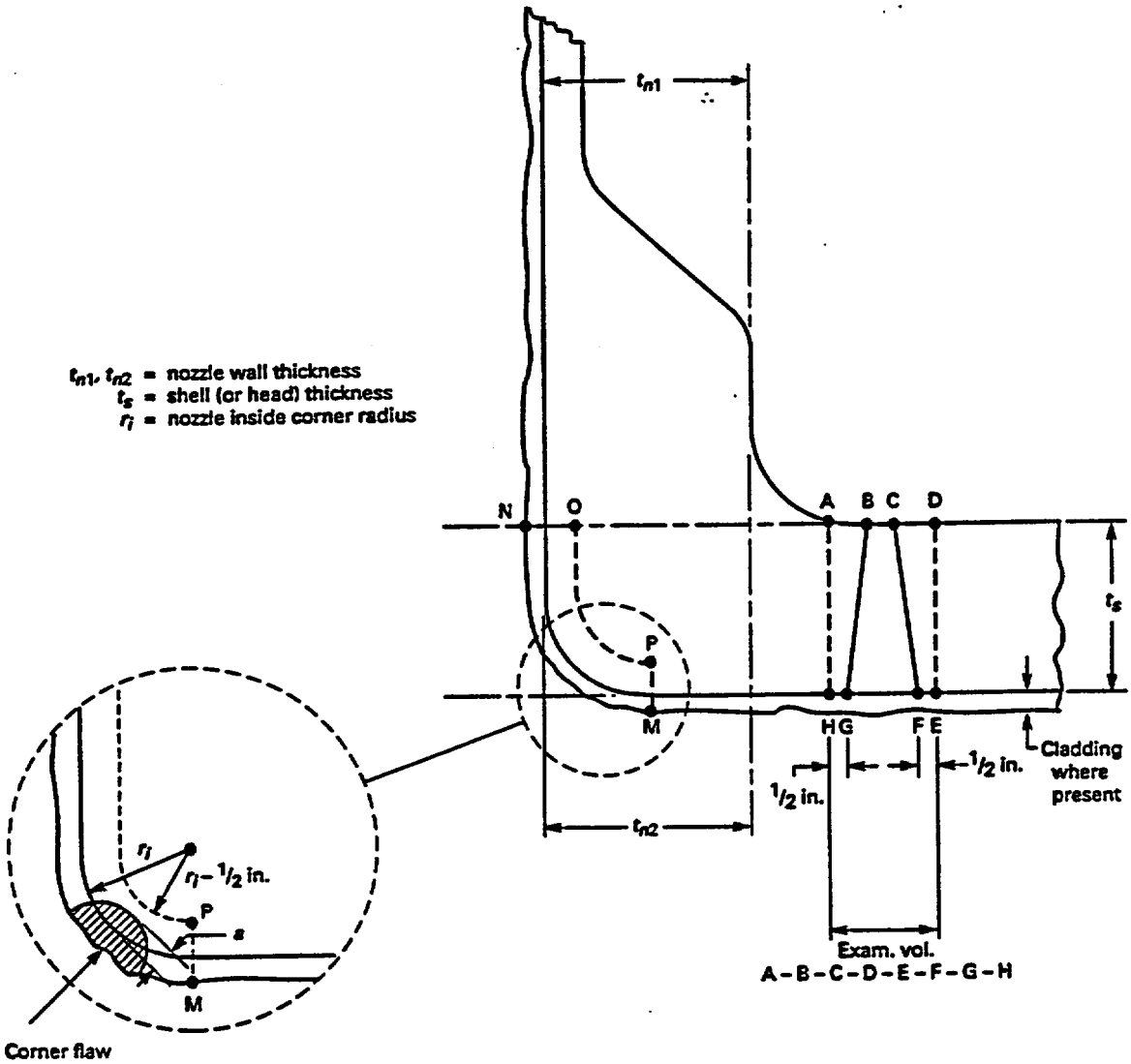

EXAMINATION REGION (Note (1))	EXAMINATION VOLUME (Note (2))
Shell (or head) adjoining region	C-D-E-F
Attachment weld region	B-C-F-G
Nozzle cylinder region	A-B-G-H
Nozzle inside corner region	M-N-O-P

NOTES:
(1) Examination regions are identified for the purpose of differentiating the acceptance standards in IWB-3512.
(2) Examination volumes may be determined either by direct measurements on the component or by measurements based on design drawings.

FIG. 2 NOZZLE IN SHELL OR HEAD
(Examination Zones in Flange Type Nozzles Joined by Full Penetration Butt Welds)

CASE (continued)

N-613

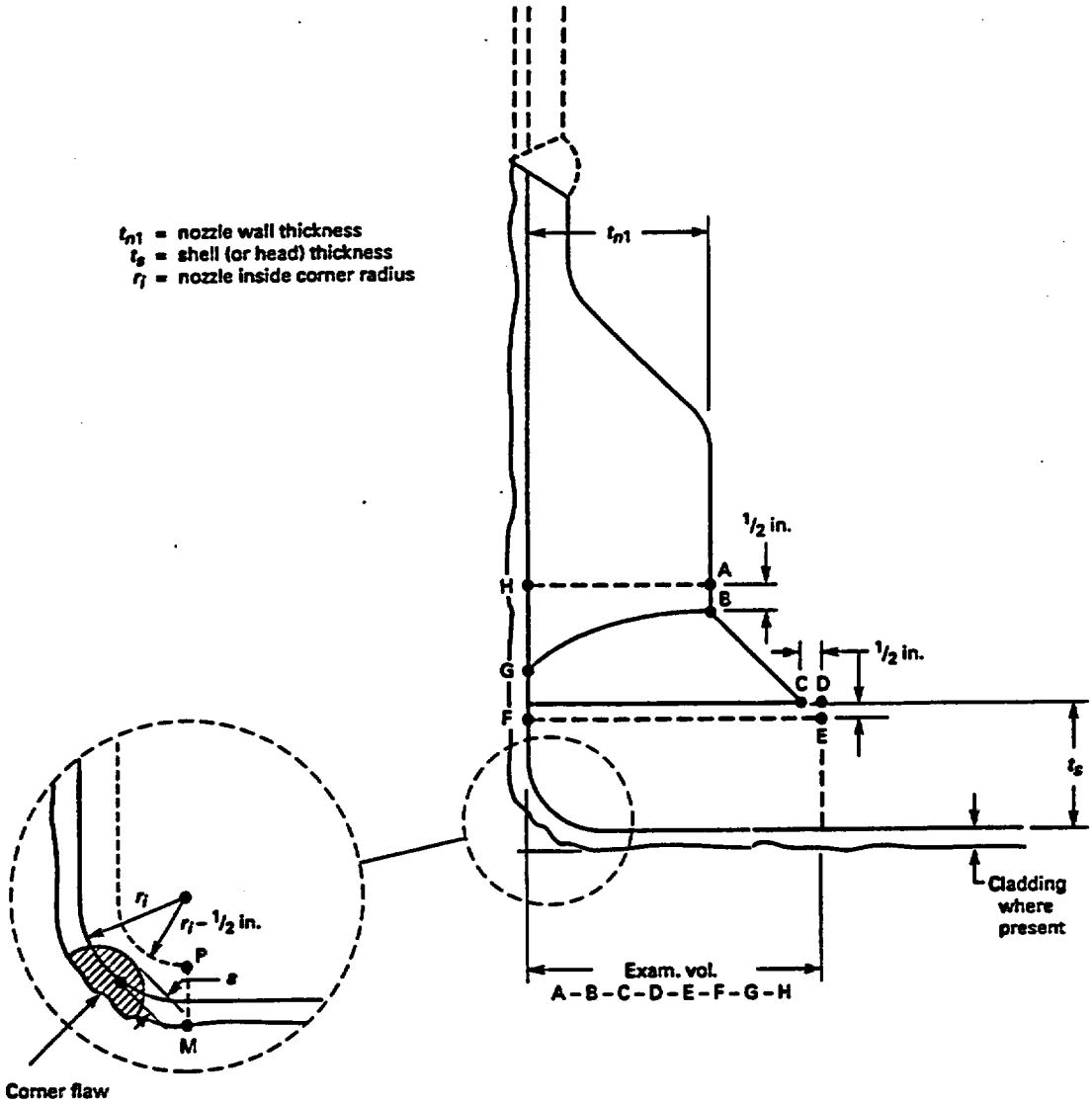

EXAMINATION REGION [Note (1)]	EXAMINATION VOLUME [Note (2)]
Shell (or head) adjoining region	C-D-E-F-G
Attachment weld region	B-C-G
Nozzle cylinder region	A-B-G-H
Nozzle inside corner region	M-N-O-P

NOTES:
(1) Examination regions are identified for the purpose of differentiating the acceptance standards in IWB-3512.
(2) Examination volumes may be determined either by direct measurements on the component or by measurements based on design drawings.

FIG. 3 NOZZLE IN SHELL OR HEAD
(Examination Zones in Set-On Type Nozzles Joined by Full Penetration Corner Welds)

This Page Intentionally Left Blank

INDIAN POINT UNIT 3
THIRD INSERVICE INSPECTION INTERVAL
RELIEF REQUEST NO. 3-10 (I), Rev. 0, 07/17/00

A. SYSTEM / COMPONENT(s) FOR WHICH RELIEF IS REQUESTED

All components subject to ultrasonic examination in accordance with the 1995 Editions and 1996 Addenda of ASME Section XI, Appendix VIII.

B. CODE REQUIREMENTS

Sub-article VII-4240 requires a minimum of 10 hours of annual training.

C. CODE REQUIREMENTS FROM WHICH RELIEF IS REQUESTED

Relief is requested from the provisions of Sub-article VII-4240, Annual Training. This requires supplemental training on an annual basis to impart knowledge of new developments, material failure modes, and any pertinent technical topics as determined by the employer. The extent of training shall be a minimum of 10 hours per year.

D. BASIS FOR RELIEF

10 CFR 50.55a was amended in the Federal Register (Volume 64, No. 183 dated September 22, 1999) to require the 1995 Edition, with the 1996 Addenda of Section XI for Appendix VIII qualification requirements. This also imposes the requirements of Appendix VII of the 1995 Edition, with 1996 Addenda of Section XI. This includes subarticle VII-4240, which requires a minimum of 10 hours of annual training.

Paragraph 2.4.1.1.1 in the Federal register contained the following statement, "The NRC had determined that this requirement *(10 hours of training on an annual basis)* was inadequate for two reasons. The first reason was that the training does not require laboratory work and examination of flawed specimens. Signals can be difficult to interpret and, as detailed in the regulatory analysis for this rulemaking, experience and studies indicate that the examiner must practice on a frequent basis to maintain the capability for proper interpretation. The second reason is related to the length of training and its frequency. Studies have shown that an examiner's capability begins to diminish within approximately 6 months if skills are not maintained. Thus, the NRC had determined that 10 hours of annual training is not sufficient practice to maintain skills, and that an examiner must practice on a more frequent basis to maintain proper skill level ... The PDI program has adopted a requirement for 8 hours of training, but it is required to be hands-on practice. In addition, the training must be taken no earlier than 6 months prior to performing examinations at a licensee's facility. PDI believes that 8 hours will be acceptable relative to an examiner's abilities in this highly specialized skill area because personnel can gain knowledge of new developments, material failure modes, and other pertinent technical topics through

other means. Thus, the NRC has decided to adopt in the final rule the PDI position on this matter. These changes are reflected in § 50.55a(b)(2)(xiv)".

This paragraph of the final rule states: "(xiv) Appendix VIII personnel qualification. All personnel qualified for performing ultrasonic examinations in accordance with Appendix VIII shall receive 8 hours of annual hands-on training on specimens that contain cracks. This training must be completed no earlier than 6 months prior to performing ultrasonic examinations at a licensee's facility.

Code Case N-583 responds to an inquiry about what alternative to the annual training requirements of Appendix VII-4240 may be used. The reply states "... supplemental practice may be used to maintain UT personnel examination skills. Personnel shall practice UT techniques by examining or by analyzing prerecorded data from materials or welds containing flaws similar to those that may be encountered during inservice examinations. This practice shall be at least 8 hr per year and shall be administered by an NDE Instructor or Level III; no examination is required.

Relief is requested in accordance with 10 CFR 50.55a(a)(3)(i) to use Code Case N-583 for annual training of ultrasonic examination personnel. When completed no earlier than 6 months prior to performing ultrasonic examinations at a licensee's facility this training will also satisfy the requirements of 10 CFR 50.55a(b)(2)(xiv) of the final rule.

E. ALTERNATIVE EXAMINATIONS

Annual training, as required by VII-4240, shall be conducted in accordance with Code Case N-583.

F. IMPLEMENTATION SCHEDULE

Relief is requested for the 3rd 10-Year Interval, July 21, 2000 thru July 20, 2009.

G. ATTACHMENT TO THE RELIEF:

ASME Code Case N-583,

H. USNRC RESPONSE:

Relief submitted

Approval Date: August 14, 1997
See Numeric Index for expiration and any reaffirmation dates.

Case N-583
Annual Training Alternative
Section XI, Division 1

Inquiry: What alternative to the annual training requirements of Appendix VII-4240 may be used?

Reply: It is the opinion of the Committee that, as an alternative to the requirements of Appendix VII-4240, supplemental practice may be used to maintain UT personnel examination skills. Personnel shall practice UT techniques by examining or by analyzing prerecorded data from material or welds containing flaws similar to those that may be encountered during inservice examinations. This practice shall be at least 8 hr per year and shall be administered by an NDE Instructor or Level III; no examination is required.

This Page Intentionally Left Blank

RELIEF REQUEST NO. 3-11 (I), Rev. 0

A. COMPONENT IDENTIFICATION

Code Class: 1 and 2
References: IWA-2600
Description: Weld Reference System

B. CODE REQUIREMENTS

Sub-article IWA-2600 requires the establishment of a weld reference system for all welds and areas subject to surface or volumetric examination. Each such weld arid area shall be located and identified by a system of reference points.

Appendix III, Subarticle III-4300 - requires the identification of examination areas. Weld identification and location shall be shown on a weld identification plan. Welds shall be marked once before or during the preservice examination to establish a reference point.

C. RELIEF REQUESTED

Indian Point 3 requests relief from the requirements of the weld reference system as specified in IWA-2600. Pursuant to 10 CFR 50.55a(a)(3)(i) relief is requested on the basis that the proposed alternative would provide an acceptable level of quality and safety.

D. BASIS FOR RELIEF

The above current code requirements include the establishment of a weld reference system which includes the initial marking of weld joints. At the time of construction of Indian Point No. 3, the application of a reference system which included the marking of welds before or during the preservice examination was not required by the code and, accordingly welds were not marked..

A reference system for controlling the selection and documentation of datum points has been in effect since preservice inspections were performed in the early 1970's. The datum and conventions established at that time have been retained to promote consistency in the recording of data. The general conventions used at Indian Point No. 3 for establishing weld reference datum points include:

Reference system for pipe:

- The datum point for a circumferential weld on a horizontal pipe is the intersection of the top centerline of the pipe and the weld centerline.

Dimensions are taken in a clockwise direction when viewing along the direction of system flow, which is marked on the line isometric drawing.

- The datum point for a circumferential weld on a vertical pipe is the intersection of the weld centerline and the centerline through the outside (extrudes) of the elbow or bend that is in the direction of the lower weld number.

- The datum for a longitudinal weld is the weld centerline and the intersecting circumferential weld.

Reference system for vessels:

- The datum for circumferential welds is the intersection of the weld centerline and the centerline of the adjacent longitudinal weld. Dimensions are taken in a clockwise direction when viewed from the top.

- Where there is no intersecting weld, the datum point is drawn from an existing structural point (i.e., the centerline of hot leg manway). This is identified on the data sheet for the weld examination.

- The datum for longitudinal welds is the intersection of the weld centerline and the centerline of the intersecting upper circumferential weld.

The weld reference system currently use at Indian Point No. 3 has been performing satisfactorily for the first and second 10-Year Intervals. The location of indications could be positively identified using the conventions identified above. Therefore, we believe that the marking of weld joints would not be necessary.

Marking of the vessels and piping at this time (for the 3rd 10-Year Interval), which is long after the preservice examination, to comply with current code requirements, which apply to marking before or during the preservice examination, could potentially create problems with the examination techniques and in the interpretation of the results. In general, the requirements of Appendix III, Subarticle III-4320 to mark on the weld centerline to a depth of 0.046 inches and to have a surface finish suitable for ultrasonic or penetrant examination conflict with each other. Marking in the area to be examined will increase the difficulty in coupling the transducer for ultrasonic examination and may result in false indications during penetrant examinations which could mask unacceptable indications. Furthermore, there is the potential of making an error in re-marking all the weld joints already inspected previously under the existing system. Marking also introduces the potential for causing localized surface damage on components. These potential problems are eliminated with the proposed alternate weld reference system.

E. PROPOSED ALTERNATE EXAMINATIONS

The weld reference system described above shall be used for locating welds on existing piping and components and new installations.

Datum reference markings will be established in the event that recordable indications are to be reported. Such datum points shall either be marked on the component or have their locations adequately described in the inspection documentation so that subsequent relocation can be achieved.

The method proposed for the identification of indication locations is identical to the one employed at Indian Point No. 3 during the first and second inspection intervals.

F. JUSTIFICATION FOR RELIEF

Since the alternative method proposed provides an acceptable level of quality and safety, as demonstrated in the first two inspection intervals, and will continue to be as effective at locating previously identified indications as required by the code, there will be no change in the level of plant quality and safety by granting this request.

G. PERIOD FOR WHICH RELIEF IS REQUESTED

Relief is requested for the third inspection interval, July 21, 2000 through July 20, 2009.

H. ATTACHMENTS TO RELIEF

None

This Page Intentionally Left Blank

RELIEF REQUEST NUMBER 3-12 (I), Rev. 0, 06-14-00
(Page 1 of 2)

A. COMPONENT IDENTIFICATION

Code Class:	1
References:	Table IWB-2500-1, Category B-A; Figure IWB-2500-3
Examination Category:	B-A
Item Numbers:	B1.21, B1.22
Description:	Reactor Vessel Closure Head and Bottom Head Circumferential and Meridional Welds

B. CODE REQUIREMENT

Table IWB-2500-1, Category B-A, Items B1.21 and 1.22, Note 2 requires that the volumetric examination coverage stipulated by Figure IWB-2500-3 be provided for essentially 100% of one weld.

C. BASIS FOR RELIEF

Pursuant to 10 CFR 50.55a(g)(5)(iii), relief is requested on the basis that compliance with the code requirement is impractical.

The Reactor Pressure Vessel was designed and fabricated to Codes in effect during the late 1960's. These Codes did not require that there be full access for inservice inspection, as was required by later Codes. The closure head peel segment to disc circumferential weld is completely enclosed within the pattern of CRDM penetrations inside the shroud and, as such, is not accessible for volumetric examination as would be required by IWB-2500. Volumetric examination of the Reactor Vessel bottom head peel segment to disc circumferential weld is restricted from inside by the location of adjacent in-core instrumentation penetrations. Volumetric examination from the outside of the Reactor Vessel is restricted by incore instrumentation conduits which prevent sufficient scanning path for volumetric examination.

The Reactor Vessel Closure Head Meridional welds are also restricted by the shroud enclosing the CRDM penetrations for volumetric examination. The Reactor Vessel Bottom Head Meridional welds are restricted from inside the Reactor Vessel by the location of adjacent in-core instrumentation penetrations. Volumetric examination from the outside of the Reactor Vessel is restricted by incore instrumentation conduits which prevent sufficient scanning path for volumetric examination.

RELIEF REQUEST NUMBER 3-12 (I), Rev. 0b, 05-18-00
(Page 2 of 2)

D. PROPOSED ALTERNATE EXAMINATION

The Reactor Vessel closure head and bottom head areas will be visually examined (VT-2) each refueling outage for evidence of leakage during system pressure tests performed in accordance with IWB-2500, Category B-P, and Code Case N-498-1. It is expected than any through wall defects would be detected by this examination prior to failure of the vessel. This is based on the expectation that the component would experience leakage before a catastrophic failure ("leak before break").

In addition, the Reactor Coolant System (RCS) is continuously monitored for leakage in accordance with the Technical Specifications. During plant operations, the RCS leak rate is limited by Technical Specification to 1 gpm from unidentified sources and 10 gpm total from identified sources. The various diverse means of leak detection are described in the associated Technical Specification Basis.

E. PERIOD FOR WHICH RELIEF IS REQUESTED

Relief is requested for the third inspection interval, July 21, 2000 thru July 20, 2009.

F. JUSTIFICATION FOR RELIEF

IP3 recently completed its 2nd 10-Year Interval Reactor Vessel ISI examinations in 1999 and found no reportable indications. Based on the successful operating history of the IP3 vessel and similar vessels at other plants, the sufficiency of the VT-2 examinations for the purpose of detecting leakage, and the fact that full code required inspections are being performed in the critical beltline region (where conditions leading to leakage would also be expected to occur if the closure head and bottom head areas were suspect), the granting of this relief request will not result in a decrease in the overall level of quality and safety of this component.

G. ATTACHMENTS TO RELIEF

None

This Page Intentionally Left Blank

Indian Point #3
Third Inservice Inspection Interval
Relief Request No. 3-13 (I), Rev. 0

A. ARTICLE/COMPONENT IDENTIFICATION:

Service Water ISI Class 3/3A piping and components.
Table IWD-2500-1, Item nos. D.1.10, D2.10 and D3.10.
IWD-3000/IWB-3000/IWB-3522
IWA-5250 Corrective Measures
Repairs/Replacements in accordance with IWA-4000 or IWA-7000
Service Water System Flow Diagram # ISI-20333, ISI-27223

B. CODE REQUIREMENTS:

Through wall leaks on ISI Class 3/3A-service water piping require a specific relief request in accordance with ASME Section XI and guidance provided in NRC Generic Letter 90-05 for each relevant condition (through wall leak).

C. RELIEF REQUESTED:

In lieu of submitting a relief request for each through wall leak encountered on ISI Class 3/3A service water piping for ASME Section XI code compliance the methodology of NRC GL 90-05 will be implemented but without a specific relief request submittal for each through wall leak.

Through-wall leakage located shall be evaluated in accordance with the requirements of IWA-5250 of the 1989 Edition of ASME XI. The specific Code requirement for which relief is requested is IWA-5250 (a)(3). Articles IWA-4000 and IWA-7000 of ASME Section XI Code repair/replacement requirements would require removal of the flaw and subsequent weld repair or replacement of the piping or component.

D. BASIS FOR RELIEF:

Pursuant to 10 CFR 50.55a(a)(3)(ii), relief is requested on the basis that the specified requirements would result in hardship or unusual difficulty without a compensating increase in the level of quality and safety. A similar relief request was approved for North Anna 1/2 on 11/3/98.

The Service Water System piping (stainless steel and cement lined carbon steel) has experienced through-wall leakage caused by crevice corrosion and pitting of unprotected weld metal in the weld area due to the aggressive chemistry of the Hudson River water. Occurrence of future through-wall leakage is anticipated. Through-wall leakage must be

located and evaluated in accordance with the requirements of IWA-5250 of the 1989 Edition of ASME XI.

> Articles IWA-4000/7000 and IWD-4000/7000 of ASME Section XI Code would require removal of the flaw and subsequent weld repair or replacement of the piping or component.

Code repairs for through-wall leaks require the line to be isolated and drained. Taking a train of service water out of service in some instances is a major evolution and requires entering a Technical Specification action statement. Welds and piping with through-wall flaws can typically be shown to have adequate structural integrity to remain in service. This type of through-wall flaw is unpredictable but not normally subject to catastrophic failure.

Generic Letter 90-05, "Guidance for Performing Temporary Non-Code Repair of ASME Code Class 1, 2, and 3 Piping", provides guidance for evaluating through wall flaws, additional inspections, replacement requirement and submitting relief requests to allow continued operation with a through-wall flaw. Submitting a relief request for each instance of through-wall leakage is an administrative burden and causes additional unnecessary review for the NRC.

The NRC has previously reviewed and approved numerous ISI Class 3 Relief requests at IP3 and throughout the industry using the guidelines of NRC GL 90-05.

E. ALTERNATIVE EXAMINATIONS:

For through wall flaws identified in ISI Class 3/3A service water piping detected during plant operation the guidelines of NRC Generic Letter 90-05 shall be followed with the exception that a specific relief request will not be submitted to the NRC.

For flaws detected during planned inspections by volumetric methods (for example, ultrasonic or radiography) during plant operation for the inspection program required by NRC Generic Letter 89-13, the guidelines of NRC Generic Letter 90-05 shall also be used with one exception. Specifically, the increased inspection sample required by NRC GL-90-05, Section C.4 (10 locations for high energy piping / 5 locations for moderate energy piping) will be dependent on the original inspection scope required by NRC GL 89-13 and evaluated as part of the corrective action process. Typically the scope of the NRC GL 89-13 program is 25-50 weld inspections per operating cycle including the scheduled refueling outage. For example during cycle 9/refueling outage 10, over 60 weld inspections were performed as part of the NRC GL 89-13 program and for augmented sample expansion required by NRC GL 90-05.

When a leak is evaluated in accordance with the requirements of GL 90-05 and subsequently an acceptable non-code repair is implemented, the subject leak shall be repaired or replaced in the next scheduled outage of 30 days or longer; or in the next refueling outage regardless of outage duration.

F. IMPLEMENTAION SCHEDULE:

Until approved by the NRC, the Authority shall continue to submit individual relief request per NRC GL 90-05.

G. JUSTIFICATION FOR RELIEF:

Pursuant to 10 CFR 50.55a(a)(3)(ii), relief is requested on the basis that the specified requirements would result in hardship or unusual difficulty without a compensating increase in the level of quality and safety. A similar relief request was approved for North Anna Units 1 & 2 on 11/3/98.

The IP3 Nuclear Power plant shall follow the guidelines of NRC Generic Letter 90-05 except as discussed in Section E of this relief request. An individual relief request will not be submitted for application of NRC Generic Letter 90-05.

H. ATTACHMENTS TO THE RELIEF:

None

I. USNRC RESPONSE

Submitted

This Page Intentionally Left Blank

RELIEF REQUEST NUMBER 3-14 (I), Rev. 0, 06-14-00
Page (1 of 2)

A. COMPONENT IDENTIFICATION

Code Class:	1
References:	Table IWB-2500-1, Category B-B, Figure IWB-2500-1 and 2
Examination Category:	B-B
Item Number:	B2.11, B2.12
Description:	Inspection of Pressurizer Upper Shell-To-Head Circumferential and Longitudinal Welds

B. CODE REQUIREMENT

Table IWB-2500-1, Category B-B, Items B2.11 and B2.12 require volumetric examination of the Pressurizer Circumferential and longitudinal shell-to-head welds as defined by Figures IWB-2500-1 and -2.

C. RELIEF REQUESTED

Indian Point 3 requests relief from performing the code required volumetric examination of the pressurizer upper head circumferential and longitudinal shell-to-head welds. Pursuant to 10CFR50.55a(g)(5)(iii), relief is requested on the basis that compliance with the Code requirement is impractical.

D. BASIS FOR RELIEF

The pressurizer was designed and fabricated to Codes in effect during the late 1960's. The Codes used did not provide for full access for inservice inspection as required by later Codes. The upper circumferential and longitudinal welds are enclosed in a biological and missile shield and are therefore completely inaccessible for volumetric examination.

RELIEF REQUEST NUMBER 3-14, Rev. 0
Page (2 of 2)

E. PROPOSED ALTERNATE EXAMINTION

Visual examination (VT-2) will be performed for evidence of leakage during system pressure tests in accordance with IWB-2500, Category B-P, and Code Case N-498-1. It is expected that any through wall defects would be detected by this examination prior to the failure of the pressurizer based on the expectation that the component will experience leakage before a catastrophic failure ("leak before break").

F. JUSTIFICATION FOR RELIEF

A similar alternative was approved and performed during the second inspection interval. Based on the reliable operating history of this and similar vessels at other plants and the performance of VT-2 examinations for leakage, granting of this relief request will not decrease the overall level of quality and safety of this component.

G. PERIOD FOR WHICH RELIEF IS REQUESTED

Relief is requested for the third inspection interval, July 21, 2000 thru July 20, 2009.

H. ATTACHMENT TO RELIEF

None

This Page Intentionally Left Blank

Indian Point 3
Third Inservice Inspection Interval
Relief Request No. 3-15 (I), Rev. 1, 07-11-00

A. ARTICLE IDENTIFICATION:

IWA-4000

B. CODE REQUIREMENTS:

ASME Boiler and Pressure Vessel Code, Section XI, IWA-4000, provides the process for assessing a component for continued service after a defect has been removed. This provision stipulated that where the section thickness has been reduced below the minimum design thickness, the component shall be repaired.

C. RELIEF REQUESTED:

Pursuant to 10CFR50.55a(a)(g)(i) relief is request on the basis that the proposed alternative would provide an acceptable level of quality and safety. It is proposed that of ASME Code Case N-597 be used for the analytical evaluation of Class 1,2 and 3 carbon and low-alloy steel piping components subjected to wall thinning as a result of flow accelerated or other corrosion phenomena. In addition, this it is requested that this Code Case be used for application to stainless steel piping and components as section of the IP3 service water system are comprised of stainless steel piping.

D. BASIS FOR RELIEF:

As an alternative to the requirements of IWA-4000, NYPA/Indian Point 3 proposes to use the provisions of ASME Section XI Code Case N-597 for the analytical evaluation of Class 1, 2 and 3 carbon, stainless steel and low alloy steel piping components subjected to wall thinning as a result of flow accelerated or other corrosion phenomena. The ASME Code Committee approved Code Case N-597, "Requirements for Analytical Evaluation of Pipe Wall Thinning, Section XI, Division 1," on March 2, 1998. A copy of the Code Case is attached. Code Case N-597 has not yet been approved for use in Regulatory Guide 1.147, "Inservice Inspection Code Case Acceptability, ASME Section XI, Division 1." However, provisions stated in footnote 6 to 10 CFR 50.55a provide for the use of other Code Cases upon request, if approve by the Director of the Office of Nuclear Reactor Regulation pursuant to 10 CFR 50.55a(a)(3).

E. ALTERNATIVE ANALYTICAL EVALUATION:

It is proposed that of ASME Code Case N-597 be used for the analytical evaluation of Class 1,2 and 3 carbon and low-alloy steel piping components subjected to wall thinning as a result of flow accelerated or other corrosion phenomena. In addition, this it is requested that this Code Case be used for application to stainless steel piping and components as section of the IP3 service water system are comprised of stainless steel piping.

F. JUSTIFICATION FOR REQUESTING RELIEF:

Unplanned replacement of piping and components during scheduled refueling outages can result in outage schedule increases and also result in an increase in person-rem exposure due to the piping replacement. The use of ASME Section XI Code Case N-597 as an alternative to the requirements of the ASME Boiler and Pressure Vessel Code, Section XI, IWA-4000 relating to the evaluation of a component where the thickness has been reduced below the minimum design thickness allows for a future planned replacement. The NRC has previously approved a 50.55a(a)(3) request to use Code Case N-597 for Northeast Nuclear Energy Company's Millstone Units 2 and 3 as documented in the safety evaluation report included in a letter dated February 23, 1999. The use of the analytical evaluation criteria specified in Code Case N-597 to evaluate wall thinning will provide a level of safety and quality consistent with the requirements of Section XI, IWA-4000.

G. IMPLEMENTATION SCHEDULE:

This relief request is applicable for the Third 10-Year Interval and will be utilized upon receipt of NRC approval.

H. ATTACHMENTS TO THE RELIEF:

Code case N-597.

I. USNRC RESPONSE

Submitted.

Approval Date: March 2, 1998
See Numeric Index for expiration and any reaffirmation dates.

Case N-597
Requirements for Analytical Evaluation of Pipe Wall Thinning
Section XI, Division 1

Inquiry: What requirements may be used for analytical evaluation of Class 1, 2, and 3 carbon and low-alloy steel piping items subjected to internal or external wall thinning as a result of flow-accelerated or other corrosion phenomena?

Reply: It is the opinion of the Committee that the following rules may be used.

-1000 SCOPE

This Subsection provides requirements for analytical evaluation of Class 1, 2, and 3 carbon and low-alloy steel piping items (e.g., piping and fittings) with internal or external wall thinning as a result of corrosion phenomena, including flow-accelerated corrosion. These requirements are applicable to nonplanar flaws.

-3000 ACCEPTABLE STANDARDS

-3100 Preservice Examination

Piping items examined prior to commercial service are acceptable for service when the measured wall thickness meets the requirements of the Construction Code.

-3200 Inservice Examination

-3210 General

Upon completion of pipe wall thickness examinations, the predicted remaining wall thickness, t_p, at the time of the next scheduled examination shall be calculated for piping items under evaluation. The predicted remaining wall thickness is the spatial distribution of wall thickness remaining throughout the piping item and may have a unique value at any given location on the piping item. Alternatively, the minimum predicted value, $t_{p\text{-min}}$, may be used in determining acceptability for continued service. Methods of predicting the rate of wall thickness loss and the value of t_p shall be the responsibility of the Owner.

-3220 Acceptance

-3221 Acceptance By Examination

Piping items whose examination and evaluation results reveal that t_p meets the acceptance standards of -3500 or the Construction Code are acceptable for continued service. When these criteria are not met, the alternatives of -3222, -3223, and -3224 may be used. Fig. -3220-1 shows a flow chart of the acceptance alternatives.

-3222 Acceptance by Repair/Replacement Activity

Piping items whose thickness is less than that required by -3500, -3223, -3224 shall be corrected by a repair/replacement activity.

-3223 Acceptance by Engineering Evaluation

Piping items whose examination and evaluation results reveal that the criteria of -3221 are not satisfied may be accepted for continued service by engineering evaluation.

(a) For Class 1 piping items, this evaluation shall be conducted in accordance with evaluation methods and criteria developed by the Owner.

(b) For Class 2 and 3 piping items, an acceptable evaluation method and criteria are provided in -3600. Alternative evaluation methods and criteria may be specified by the Owner.

-3224 Acceptance by Reduction of Time to Next Examination

Piping items whose examination and evaluation results reveal that the criteria of -3221 are not satisfied, are acceptable for continued service when the time to the next examination for the affected piping items is reduced such that the acceptance criteria of -3221 or -3223 are met using the t_p for the reduced examination period.

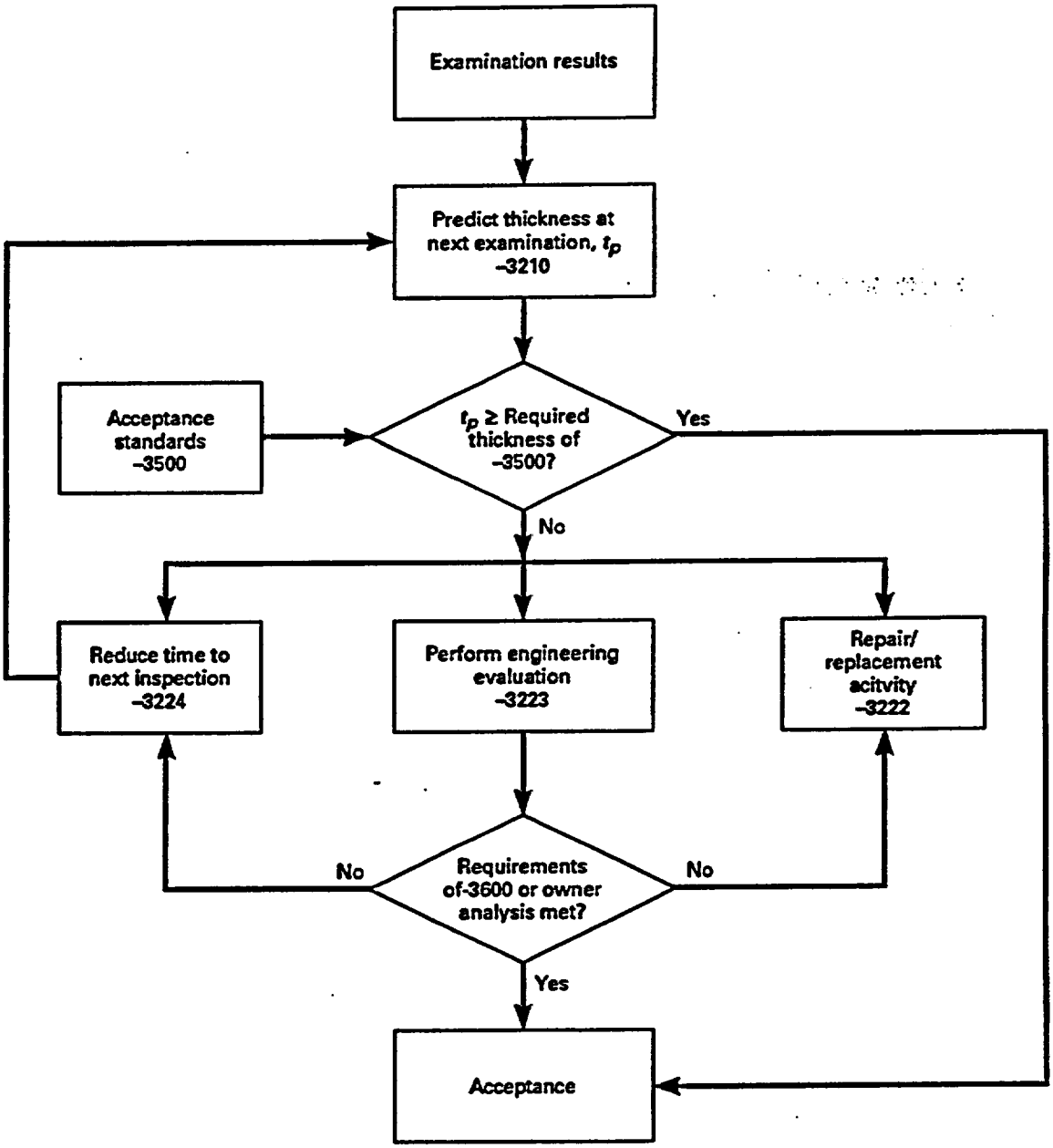

FIG. -3220-1 ACCEPTANCE FLOW CHART

Required Thickness	
Piping item	Reference
Straight pipe	-3500(a)(1)
Elbows	-3500(a)(1)
Reducers[1]	-3500(a)(2)
Tees[1]	-3500(a)(3)
Branch connections[1]	-3500(a)(3)
Designed item	-3500(a)(4)
Other items	-3500(b)

[1]Alternate of -3500(a)(5) may be used.

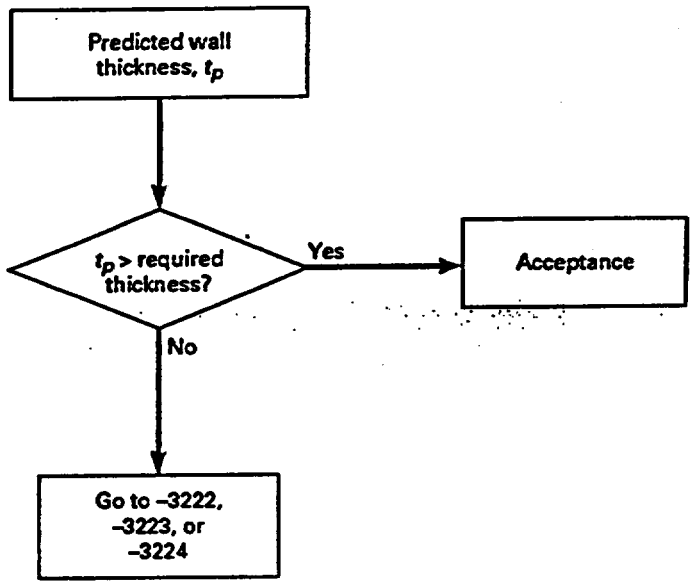

Thickness Limit	
Code class	Reference
1	-3500(c)
2	-3500(d)
3	-3500(e)[2]

[2]Alternate criteria may be developed in accordance with -3500(f).

FIG. -3500-1 WALL THICKNESS ACCEPTANCE STANDARD FLOW CHART

-3500 Wall Thickness Acceptance Standards

A flow chart for the acceptance standards is shown in Fig. -3500-1.

(a) A Class 1, 2, or 3 butt welded pipe, elbow, branch connection, or reducer piping item is acceptable for continued service without further evaluation when t_p at all locations on the piping item meets the following requirements.

(1) For straight pipe and elbows purchased to a nominal pipe specification with an allowable wall thickness undertolerance of 12.5%, t_p shall be not less than 0.875 t_{nom} except that, for Class 1 short radius elbows, an evaluation shall be conducted to show that the requirements of NB-3642.2 are met.

(2) For the small end of concentric and eccentric reducers, t_p shall be not less than 0.875 t_{nom} for the pipe size at the small end. For the large end, the large end transition and the conical portion, t_p shall not be less than 0.875 t_{nom} for the pipe size at the large end. For the small end transition, the required thickness shall be gradually reduced from that required at the large end to that required at the small end (see Fig. -3622-1).

(3) For tees and branch connections, t_p shall be not less than 0.875 t_{nom} for the same size pipe for regions outside the limits of reinforcement required by the Construction Code used in the evaluation. For regions within the limits of reinforcement, t_p shall be not less than the thickness required to

meet the branch reinforcement requirements of the Construction Code.

(4) For regions of piping items designed to specific wall thickness requirements, including designed weld counterbores and regions with integral reinforcement, t_p shall be not less than the minimum design thickness, including tolerances and excluding any corrosion allowances, specified in the original design analysis for the piping item.

(5) As an alternative to the requirements of -3500(a)(2) and -3500(a)(3), for reducers, tees, or branch connections purchased to fitting standards allowed in Table NB-3132-1 and for which baseline as-installed thickness measurements exist, t_p shall not be less than 0.875 times the as-installed thickness measurements, except that the thickness shall not be less than 0.875 t_{nom}.

(b) Acceptance criteria for Class 1, 2, and 3 pumps, valves, flanges, reducing elbows, socket weld fittings, and any other piping items not covered by -3500(a) shall be the responsibility of the Owner.

(c) For any Class 1 piping item, when t_p at any location is less than 0.3 t_{nom}, further evaluation is beyond the scope of this Case.

(d) For any Class 2 piping item, when t_p at any location is less than 0.2 t_{nom}, further evaluation is beyond the scope of this Case.

(e) Except as provided in *(f)* below, for any Class 3 piping item, when t_p at any location is less than 0.2 t_{nom} or 0.5 t_{min}, whichever is less, further evaluation is beyond the scope of this Case. The value of t_{min} shall be determined in accordance with -3600.

(f) As an alternative to -3500(e), decreased wall thickness, including local through-wall leakage in Class 3 piping items whose maximum operating temperature does not exceed 200°F and whose maximum operating pressure does not exceed 275 psi may be accepted. Evaluation methods and acceptance criteria shall be specified by the Owner.

-3600 Analytical Evaluation for Class 2 and Class 3 Piping Items

-3610 General Requirements

(a) Analytical evaluations shall be conducted in accordance with Construction Code. Later Code Editions and Addenda may be used. Use of later Code Editions and Addenda shall be reviewed for acceptability to the regulatory and enforcement authorities having jurisdiction at the plant site.

(b) Analytical evaluations shall be conducted using the predicted wall thickness, t_p, at the next examination of the piping item. The methods used to determine t_p are the responsibility of the Owner.

(c) A piping item is acceptable for continued service if the minimum pipe wall thickness, branch reinforcement requirements, and piping stress criteria of the Construction Code used in the evaluation are met for all specified loading conditions.

(d) As an alternative to -3610(c), butt welded pipe, elbow, branch connection, and reducer piping items may be evaluated in accordance with -3620.

(e) Alternative evaluation of pumps, valves, flanges, and other piping items are the responsibility of the Owner.

(f) Piping items under evaluation with t_p, exceeding the acceptance standards of -3500 and satisfying -3600 shall be monitored for continued degradation. The frequency and means of monitoring for degradation are the responsibility of the Owner.

-3620 Evaluation of Pipe, Elbows, Branch Connections, and Reducers

-3621 General Requirements

(a) The evaluation shall meet the requirements of -3622 and -3623.

(b) For a branch connection or tee, the region within the limits of reinforcement defined in the Construction Code shall meet the requirements of -3624.

(c) Evaluations shall be conducted using the appropriate piping equations, loadings, load combinations, allowable material properties, and other acceptance standards from the Construction Code used in the evaluation, except as specifically modified by this Case.

(d) When the ratio R/t_p is greater than 50, the potential for buckling of the thinned region shall be evaluated. Evaluation methods and acceptance criteria shall be specified by the Owner.

-3622 Thickness Evaluation

-3622.1 Evaluation for Minimum Wall Thickness

(a) Except as provided in -3622.1(b), the value of t_p at any location shall not be less than 90% of the minimum wall thickness of the piping item, t_{min}, required for design pressure, defined in the Construction Code used in the evaluation, exclusive of any additional corrosion allowance.

(1) For straight pipe, bends, and elbows, t_{min} shall be determined by:

$$t_{min} = \frac{PD_o}{2(S + yP)}$$

(2) For concentric and eccentric reducers, t_{min} at each end shall be equal to t_{min} of straight pipe of the same nominal size as the reducer end. For the conical portion of the reducer and the transition at the large diameter end, t_{min} shall be that of the large diameter end. A gradual transition in t_{min} shall be assumed for the transition at the small end (see Fig. -3622-1).

(3) For branch connections and tees, except at regions providing reinforcement of the opening required by the Construction Code used in the evaluation, t_{min} shall be as required for straight pipe.

(b) When t_p is less than 0.9 t_{min} at any location, additional evaluations may be conducted to determine the allowable local thickness, t_{aloc}, subject to the limitations in (c). The thinned region and the parameters that define the depth and extent of thinning are illustrated in Fig. -3622-2. The allowable local thickness shall be determined in accordance with any one of the methods in -3622.2, -3622.3, -3622.4, -3622.5, or -3622.6.

(c) Local thinning evaluation shall not be allowed for the following:

(1) A region adjacent to any branch connection on the run piping, unless the distance between the center of the branch connection and the edge of the thinned area predicted to be less than t_{min} exceeds D_i, where D_i is the nominal inside diameter of the branch connection and L_m is the maximum dimension of the thinned region less than t_{min}.

(2) At the small end transition of a reducer.

(3) Inner portion of elbows and pipe bends (Fig. -3622-3), excluding a region within $1.5\sqrt{R_{nom}t_{nom}}$ of the butt welds, unless the t_{min} in the evaluation of -3622.2, -3622.3, or -3622.4 is replaced by t'_{min}, defined by:

$$t'_{min} = \left(0.5 + \frac{0.5}{1 + \frac{\cos\theta}{(R_b/R_o = +)}}\right) t_{min,pipe}$$

-3622.2 Local Thinning — Limited Transverse Extent

(a) The evaluation procedure shall consider the depth and extent of the affected area and require that the wall thickness exceed t_{min} for a distance that is the greater of $2.5\sqrt{R_{nom}t_{nom}}$ or $2L_{m,avg}$ between adjacent thinned regions, where R_{nom} is the mean radius of the piping item based on nominal wall thickness and $L_{m,avg}$ is the average of the extent of L_m below t_{min} for the adjacent areas (see Fig. -3622-4). Alternatively, the adjacent thinned regions shall be considered a single thinned region in the evaluation.

(b) Provided that the transverse extent of wall thinning predicted to be less than t_{min}, $L_{m(t)}$, is less than or equal to $\sqrt{R_{min}t_{min}}$, the allowable local thickness, t_{aloc}, shall be determined from Table -3622-1, where R_{min} is the mean radius of the piping item based on the minimum wall thickness t_{min}. For straight pipe, Table -3622-1 may be used when $L_{m(t)}$ exceeds $\sqrt{R_{min}t_{min}}$, except that an additional thickness t_b shall be added to the value determined from Table -3622-1.

(c) This approach shall not be used to evaluate a reducer.

-3622.3 Local Thinning — Limited Axial and Transverse Extent

(a) When the maximum extent of wall thinning, L_m, for which thickness is predicted to be less than t_{min} is less than or equal to $2.65\sqrt{R_{min}t_{min}}$, and t_{nom} is greater than 1.13 t_{min}, t_{aloc} shall be determined by satisfying (b) below and (c) or (d) below. This approach requires that adequate reinforcement be available surrounding the thinned area in accordance with (c) or (d). This evaluation approach is not applicable for the following conditions:

(1) Thinned areas adjacent to branch connections, when the reinforcement zone for the thinned area would overlap the required reinforcement of the branch connection.

(2) Thinned areas for which any portion of the reinforcement zone would lie on the conical or small diameter transition zone of a reducer.

(3) Adjacent thinned areas qualified by this approach when the reinforcement zones associated with each area would overlap.

(b) The thickness of the remaining pipe wall at the thinned section is adequate if the following equation is satisfied.

$$\frac{t_{aloc}}{t_{min}} \geq \frac{0.353L_m}{\sqrt{R_{min}t_{min}}}$$

(c) If there is a surrounding reinforcement zone with predicted thickness of at least t_{nom} for a minimum

dimension of $L/2$ in all directions, reinforcement for the thinned area shall satisfy the following equation.

$$\frac{t_{aloc}}{t_{min}} \geq 1 - \left(\frac{1.5\sqrt{R_{min}t_{min}}}{L}\right)\left(\frac{t_{nom}}{t_{min}} - 1\right)$$

(d) As an alternative to (c), the reinforcement adjacent to the thinned area shall justify the following equation.

$$\frac{t_{aloc}}{t_{min}} \geq 1 - \left(\frac{0.935A_{rein}}{L_m t_{min}}\right)$$

-3622.4 Local Thinning — Unlimited Transverse Extent

(a) The evaluation shall include consideration of the depth and extent of the affected area less than t_{min}. The wall thickness shall exceed t_{min} for an axial distance the greater of $2.5\sqrt{R_{nom}t_{nom}}$ or $2\ L_{ma,max}$ between adjacent thinned regions at each circumferential location on the piping item (see Fig. -3622-5). Alternatively, the adjacent thinned regions shall be considered a single thinned region in the evaluation.

(b) Thickness t_{aloc} shall be determined from Table -3622-1.

(c) This approach shall not be used to evaluate a reducer.

-3622.5 Local Thinning — Elbows and Bent Pipe

(a) For locations farther than $\sqrt{R_{min}t_{min}}$ from welds to adjacent piping items, the predicted thickness on the outer portion of an elbow or bend may be less than t_{min} for straight pipe. The local allowable thickness at each location shall be determined by:

$$\frac{t_{aloc}}{t_{min,pipe}} \geq 0.5 + \frac{0.5}{1 + \dfrac{\cos\theta}{\left(\dfrac{R_b}{R_{min}}\right)}}$$

where

R_b/R_{min} = ratio of elbow bend radius to mean pipe radius, based on t_{min} for the same size pipe

-3622.6 Local Thinning — Central Portions of Concentric Reducers

(a) For the conical portion of concentric reducers, the local allowable thickness less than t_{min} shall satisfy the following equation:

$$\frac{t_{aloc}}{t_{min,1}} \geq \frac{d_o/D_1}{\cos\alpha}$$

(b) For the flared transition at the small end of a concentric reducer, the local allowable thickness shall be gradually reduced from the value determined at the conical end of the flare to t_{min} for the small end of the reducer.

(c) This approach shall not be used to evaluate eccentric reducers.

-3623 Piping Stress Evaluation

-3623.1 Evaluation Requirements

(a) The effects of piping stresses shall be evaluated in accordance with the equations of the Construction Code used in the evaluation. If the piping analysis is based on nominal piping thickness, allowable stresses may be multiplied by 1.143. Consideration shall be given to changes in the pipe metal area, pipe inside area, section modulus, and stress indices or stress intensification factors, as described in -3623.2, -3623.3 and -3623.4. The effects of cyclic operating conditions shall be addressed in accordance with -3625.

(b) The piping stress evaluation, shall be based on the predicted thickness at each cross section of the piping item that exhibits significant thinning or is affected by a change in stress index or stress intensification factor. Alternatively, the evaluation may be based on the limiting cross section.

-3623.2 Nominal Longitudinal Pressure Stresses

(a) The pipe metal area and the pipe inside area, for the thinned cross section might result in stresses different from those of the piping stress analysis of record.

(b) For simplified analysis, the piping item may be assumed to be uniformly thinned with a thickness of $t_{p,min}$. For this approach, the nominal longitudinal pressure stress shall be determined by:

$$S_p = \frac{PD_o}{4t_{p,\min}}$$

When evaluating reducers, the large and small ends shall be evaluated separately. For the large end, $t_{p,\min}$ shall be determined from all locations for the large end and conical section. For the small end, $t_{p,\min}$ for the entire reducer shall be used.

(c) Detailed stress analysis may be conducted based on the complete set of measurements around the thinned cross-section of the piping item. The nominal longitudinal pressure stress, S_p, shall be determined by:

$$S_p = \frac{PA_i}{A_p}$$

(1) To evaluate piping at a branch connection beyond the limits of reinforcement, it shall be assumed that the entire region within limits of reinforcement is at thickness $t_{\min}$ for the unreinforced pipe section, with the outside surface at the pipe nominal outside radius. If excess reinforcement is available within the limits of reinforcement, the excess metal area may be included in A_p.

(2) When evaluating the longitudinal pressure stress in the central cone of a reducer, the stress shall be determined based on the local radius at the cross section and the local t_p at and adjacent to the cross section of interest, except that the resulting stress shall be multiplied by a factor of $1/\cos\alpha$.

(d) When using Code Editions and Addenda that require use of stress indices, the nominal longitudinal stress determined in accordance with (b) and (c) shall be doubled.

-3623.3 Nominal Longitudinal Bending Stresses

(a) Thinning of the piping item cross-sectional area might result in bending stresses different from those of the piping stress analysis of record. The nominal longitudinal bending stress, S_b, for the various loading conditions and load combinations shall be determined by:

$$S_b = \frac{M_b + PA_o\delta}{Z_{\min}}$$

(b) For simplified analysis, the piping item section modulus may be based on a uniformly thinned section with thickness $t_{p,\min}$. When evaluating reducers, the large and small ends shall be evaluated separately. For the large end, $t_{p,\min}$ shall be determined from all locations for the large end and conical section. For the small end, $t_{p,\min}$ for the entire reducer shall be used.

(c) Detailed stress analysis may be conducted based on a complete set of measurements around the thinned cross section of the piping item.

(d) When evaluating thinning at the cross section of a branch connection, the requirements of -3623.2(c)(1) shall be met.

-3623.4 Stress Intensification Factors and Stress Indices

The local piping item wall thickness could affect the stress indices or stress intensification factors used in determination of the effective piping stress at a branch connection. When reduced wall thickness could increase these factors, the effect shall be considered by using a reduced piping item thickness determined in accordance with (a), (b), or (c).

(a) Except as allowed in (b) or (c), stress intensification factors or stress indices for a piping item shall be based on the assumption of uniform wall thickness, using a value of $t_{p,\min}$ and an associated mean pipe radius in the formula for these factors.

(b) As an alternative (a) above, the factors may be based on the average t_p of the piping item excluding branch reinforcement zones, except that predicted thickness at locations within a distance of twice the pipe nominal wall thickness from butt welds to adjacent components need not be considered. For reducers, the average t_p of the small end shall be used with the small end diameter to determine the factor.

(c) As an alternative to (a) or (b) above, stress analysis of thinned piping items may be conducted to show the effects of wall thinning and the distribution of stresses on an affected piping item.

-3624 Evaluation of Branch Connections

-3624.1 The region of branch connections and tees within limits of reinforcement of the Construction Code used in the evaluation shall be evaluated in accordance with -3624.2 or -3624.3.

-3624.2 Branch Connections Not Requiring Reinforcement

(a) The region on the piping run shall be evaluated in accordance with the requirements of -3622 and -3623, without consideration of the branch connection, except that t_p within a region of radius of D_i of the branch pipe from the center of the branch connection shall not be less than $t_{\min}$ for the pipe run.

(b) The branch piping shall be evaluated in accordance with the requirements of -3622 and -3623.

-3624.3 Branch Connections Requiring Reinforcement

(a) Branch reinforcement requirements shall be determined in accordance with the Construction Code used in the evaluation.

(b) For the region of the piping run that provides branch reinforcement, the value of t_p at any location shall not be less than t_{min} for the nominal pipe run plus any required reinforcement at that location.

(c) For the region of the branch pipe that provides branch reinforcement, t_p shall not be less than t_{min} for the branch pipe plus any required reinforcement.

-3625 Evaluation for Cyclic Operation

(a) For piping items with $t_{p,min}$ not less than 0.75 t_{nom} and subject to no more than 150 equivalent full temperature cycles at the time of the next examination, in accordance with the Construction Code used in the evaluation, piping stress equations that include thermal expansion and anchor movement stresses need not be evaluated.

(b) For piping items not meeting the requirements of -3625(a), when the design includes consideration of thermal expansion stresses, the allowable stress range for expansion stress shall be determined in accordance with the Construction Code used in the evaluation, except that the stress intensification factor, i, shall be revised to take into account the geometry of the thinned region. As an alternative to establishing a revised stress intensification factor, the stress range reduction factors of Table -3625-1, which are based on an increase in the stress intensification factor by a factor of 2 over the life of the component, may be used.

(c) The potential for local overstrain in the thinned region for the combination of maximum sustained plus thermal expansion stresses shall be considered. Sustained loads include pressure, weight, and other sustained mechanical loads. Local overstrain is defined in NC-3672.6(b). Evaluation methods and acceptance criteria shall be specified by the Owner.

-3626 Nomenclature/Definitions

A_o = total cross-sectional area of pipe based on nominal outside diameter, $\frac{\pi D_o^2}{4}$, in.^{2}

A_i = predicted inside cross-sectional area for a pipe that has experienced wall thinning, in.^{2}

A_m = predicted metal cross-sectional area for a pipe that has experienced wall thinning, in.^{2}

A_p = predicted metal cross-sectional area of pipe, in.^{2}

A_{rein} = the reinforcement area available in the pipe wall based on the predicted thickness distribution in excess of t_{min} and within the limits of reinforcement of the Construction Code for an opening with diameter L_m at the region of local thinning, in.^{2}

D_o = nominal outside diameter of piping item (e.g., 10.75 for NPS 10 pipe), in.

d_o = maximum outside diameter of a reducer at the thinned location, in.

D_l = outside diameter at the large end of the reducer, in.

D_i = nominal inside diameter of a branch connection, in.

f = stress range reduction factor

i = stress intensification factor of the Construction Code (not less than 1.0)

I_{min} = predicted minimum moment of inertia of the thinned pipe about the neutral axis of the pipe section, considering all orientations of the section neutral axis, in.^{4}

L = maximum extent of a local thinned area with wall thickness less than t_{nom}, in.

L_m = maximum extent of a local thinned area with wall thickness less than t_{min}, in.

$L_{m(a)}$ = maximum axial extent of a local thinned area with wall thickness less than t_{min}, in.

$L_{ma,max}$ = maximum of the axial extents of two adjacent local thinned areas with wall thickness less than t_{min}, in.

$L_{m(t)}$ = maximum transverse extent of a local thinned area with wall thickness less than t_{min}, in.

$L_{m,avg}$ = average of the extents of thickness less than t_{min} for two adjacent thinned areas, in.

M_b = resulting bending moment from the design analysis of record for each loading condition under consideration, in-lb

P = design pressure, psi

R_b = bend radius of an elbow to the elbow center line, in.

R_o = nominal outside radius (e.g., 2.25 for NPS 4 pipe), in.

R_{max} = radius to the nominal outside surface of the pipe plus the nominal distance between the center of the pipe and the neutral axis, in.

R_{min} = mean radius of piping item based on the

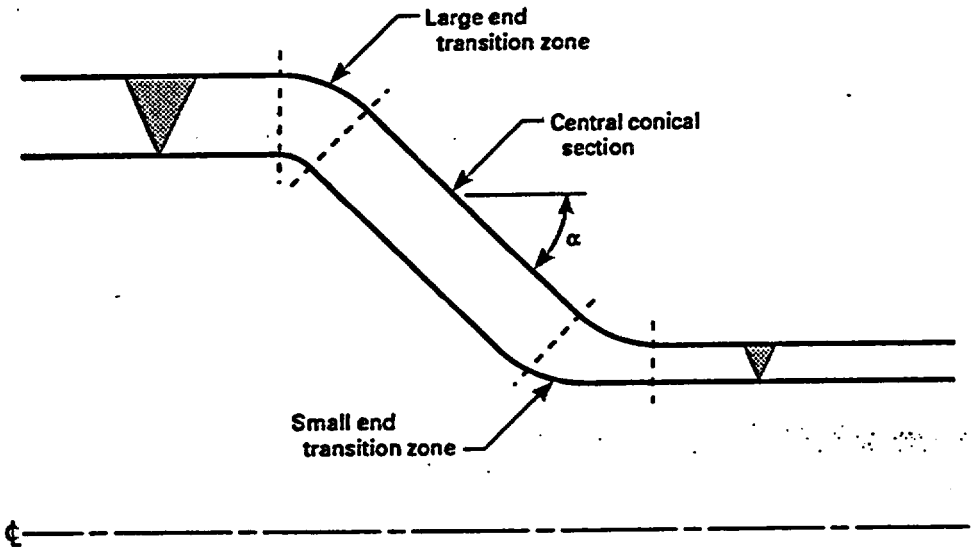

GENERAL NOTE:
Transition zones extend from the point on the ends where the diameter begins to change to the point on the central cone where the cone angle is constant.

FIG. -3622-1 ZONES OF REDUCER

nominal outside radius and the minimum wall thickness (e.g., 7.85 for NPS 16 pipe with t_{min} = 0.30 in.), in.

R_{nom} = mean radius of piping item based on the nominal radius and thickness (e.g., 6.75 for NPS 14 XS pipe with t_{nom} = 0.5 in.), in.

S = allowable stress for piping item, including joint efficiency factor, E, if applicable, psi.

S_b = maximum nominal bending stress at the thinned section, psi.

S_p = nominal longitudinal pressure stress, psi.

t_{aloc} = allowable local thickness, in.

t_b = uniform thickness, of piping item, required by the Construction Code, to withstand sustained and occasional bending loadings in the absence of pressure, thermal expansion, and anchor movement loadings, in.

t_{min} = minimum wall thickness required by the Construction Code to sustain pressure, exclusive of tolerances and any allowances for corrosion, in.

$t_{min,l}$ = t_{min} for large end of a reducer, in.

$t_{min,pipe}$ = t_{min} for straight pipe, in.

t'_{min} = adjusted minimum thickness for inner portion of an elbow, in.

t_{nom} = nominal thickness of pipe or fitting specified in the applicable industry standard for the piping item. For items designed to specified minimum thickness, the nominal thickness is the design thickness, including corrosion allowance and excluding tolerances, in.

t_p = distribution of predicted local thickness of a piping item at the next scheduled examination, in.

$t_{p,min}$ = minimum predicted local thickness of a piping item at the next scheduled examination, in.

y = factor required by the Construction Code used in the evaluation

Z_{min} = predicted minimum section modulus for the thinned section, including consideration of the shift of the neutral axis of the thinned pipe section, I_{min}/R_{max}, in.^{3}

α = maximum cone angle at the center of a reducer, degree

θ = maximum angle from the center of the outer

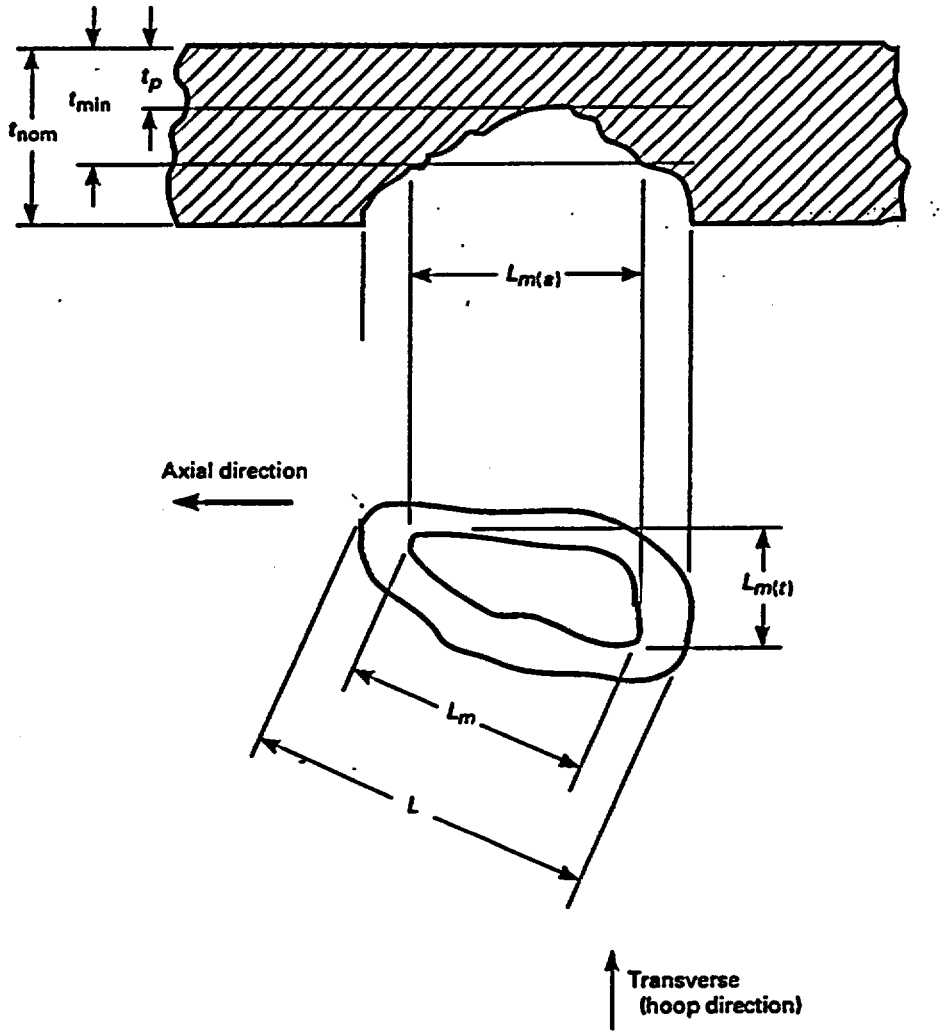

FIG. -3622-2 ILLUSTRATION OF FLOW-ACCELERATED-CORROSION WALL THINNING

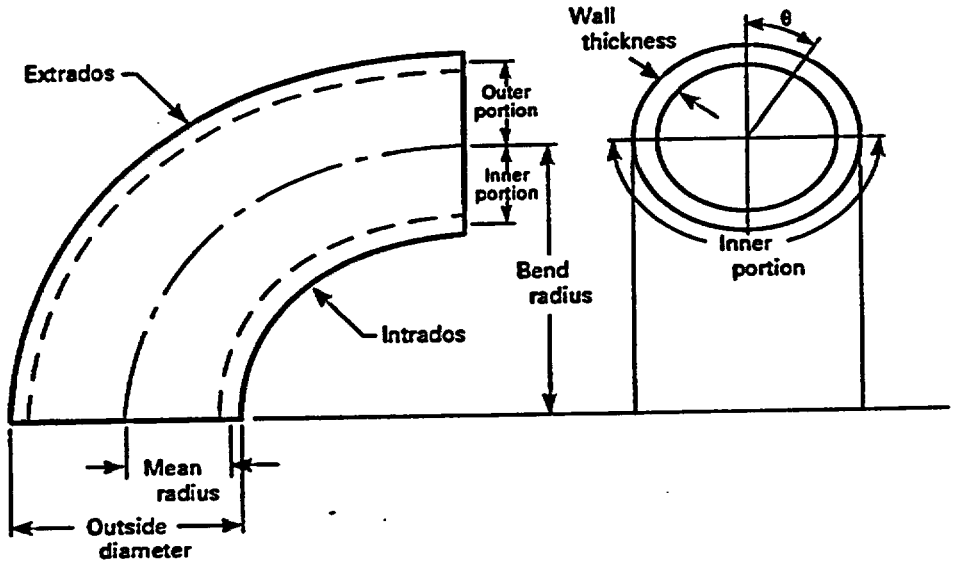

FIG. -3622-3 ELBOW AND NOMENCLATURE

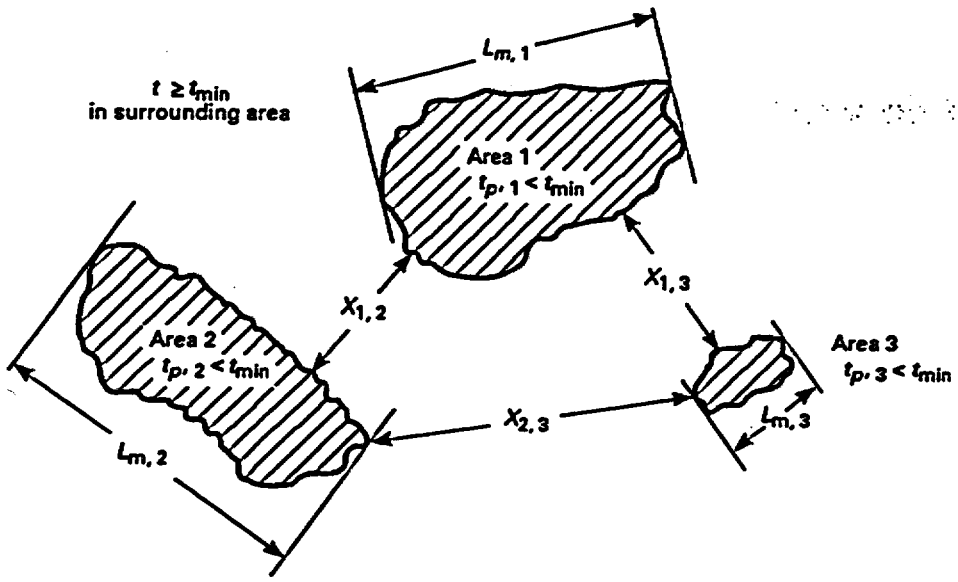

X_{ij} = minimum distance between areas i and j

$L_{m,i}$ = maximum extent of thinned area i

$L_{m,avg}$ = $0.5\ L_{m,i} + L_{m,j}$

GENERAL NOTE:
Combination of adjacent areas into an equivalent single area shall be based on dimensions and extents prior to combination.

FIG. -3622-4 SEPARATION REQUIREMENTS FOR ADJACENT THINNED AREAS

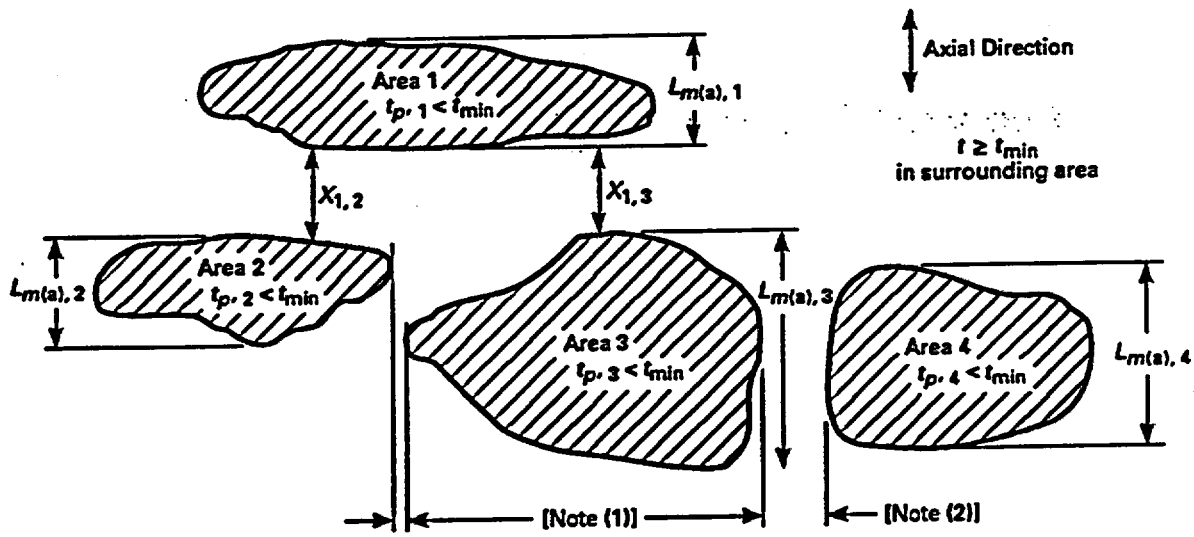

X_{ij} = minimum distance between areas i and j at any circumferential location on pipe

$L_{m(a),i}$ = maximum extent of thinned area i in axial direction

L_{max} = maximum of the extents $L_{m(a),i}$ and $L_{m(a),j}$ of two adjacent areas

NOTES:
(1) Areas need not be combined into single areas based on separation in the transverse direction, provided that transverse extents of individual adjacent thinned areas do not overlap.
(2) Combination of adjacent areas into an equivalent single area shall be based on dimensions and extents prior to any combination of adjacent areas.

FIG. -3622-5 SEPARATION REQUIREMENTS FOR ADJACENT THINNED AREAS

TABLE -3622-1

$\frac{L_{m(a)}}{\sqrt{R_{min}t_{min}}}$	Allowable Local Thickness t_{aloc}/t_{min}	
	-3622.2	-3622.4
0	0.100	0.100
0.20	0.100	0.261
0.23	0.100	0.300
0.26	0.100	0.375
0.32	0.100	0.477
0.38	0.100	0.551
0.45	0.100	0.616
0.50	0.100	0.651
0.60	0.100	0.703
0.70	0.182	0.742
0.83	0.300	0.778
0.85	0.315	0.782
0.90	0.349	0.794
1.00	0.410	0.813
1.20	0.505	0.841
1.40	0.572	0.860
1.60	0.622	0.873
1.80	0.659	0.883
2.00	0.687	0.891
2.25	0.714	0.897
2.50	0.734	0.900
2.75	0.750	0.900
3.00	0.763	0.900
3.50	0.787	0.900
4.00	0.811	0.900
4.50	0.834	0.900
5.00	0.858	0.900
5.50	0.882	0.900
6.00	0.900	0.900
>6.00	0.900	0.900

GENERAL NOTE:
Interpolation may be used for intermediate values.

one-half of the elbow to the location of the thinned area being evaluated, as measured in the pipe cross section, degree

δ=nominal distance between the center of the pipe and the neutral axis of the thinned piping section, in.

TABLE -3625-1
MODIFIED STRESS RANGE REDUCTION FACTORS

Number of Equivalent Full Temperature Cycles[1], N	Stress Range Reduction Factor[2], f
650 or less	1.0
>650 to 1100	0.9
>1100 to 2000	0.8
>2000 to 3900	0.7
>3900 to 8500	0.6
>8500 to 21,000	0.5
over 21,000	0.4

NOTES:
(1) Cycles to next scheduled inspection or repair/replacement activity.
(2) The modified stress range reduction factors are based on an increase in the stress intensification factor, i, by a factor of 2 over the life of the component.

This Page Intentionally Left Blank

Indian Point 3
3rd Inservice Inspection Interval
RELIEF REQUEST NUMBER 3-16 (I), Rev. 0

A. COMPONENT INDENTIFICATION

Code Class:	1
References:	Table IWB-2500- 1, Figure IWB-25OO-7
Examination Category:	B-D
Item Number:	B3.120
Description:	Inspection of Pressurizer Nozzle Inside Radius Sections

B. CODE REQUIREMENT

Table IWB-2500-1, Category B-D, requires a volumetric examination of the pressurizer nozzle inside radius section.

C. RELIEF REQUESTED

Indian Point 3 requests relief from the performing the code required volumetric examination of the pressurizer nozzle inside radius section. Pursuant to 10CFR50.55a(g)(5)(iii), relief is requested on the basis that compliance with the code requirement is impractical.

D. BASIS FOR RELIEF

The pressurizer was designed and fabricated to Codes in effect during the late 1960s. The Codes used did not provide for full access for inservice inspection nor did they require a surface finish in the nozzle area suitable for UT examination. The design of the nozzles, utilizing a gradual inside radius section, is specifically intended to reduce stress in this area and minimize the conditions that might lead to cracking.

The nozzles on the pressurizer are cast with the vessel heads. The as-cast surface of the heads, combined with the geometry of this area makes ultrasonic examination of the nozzle inner radii impractical. The geometry and size of the nozzles are such that a radiographic examination is not feasible. Specifically, the radiographic test film cannot be situated properly from the I.D. due to a lack of interior structure. Placement of the source will not allow proper film to source distance, resulting in greatly reduced sharpness due to part geometry. Surface and visual examinations would be restricted by anticipated high radiation levels and the as-clad surface.

A similar relief to perform only the visual, VT-2 examination was initially requested for the 2nd ISI Interval, but was granted with an additional condition to perform a remote video

examination of the pressurizer nozzle inside radius sections (with the exception of the pressurizer surge nozzle which has a retaining basket covering the outlet to preclude remote visual examination). These pressurizer nozzle inside radius sections were remote visually inspected during Refueling Outage 10 in 1999. No evidence of cracking was found. In addition to various costs and resources expended for supporting activities such as insulation removal and reinstallation; special de-tensioning tools and trained crews for manway removal, a total of 150 mRem was also recorded for the performance of this remote visual examination due to the high general area radiation level.

E. PROPOSED ALTERNATE EXAMINATION

All nozzles will be visually examined (VT-2) at each refueling outage during system pressure tests in accordance with IWB-2500, Category B-P, and Code Case N-498-1 in lieu of the code-required volumetric examination once in ten years. It is expected that any through wall defects would be detected by the proposed alternate examination prior to failure of the component. This is based on the expectation that the component will experience leakage before a catastrophic failure ("leak before break")

F. JUSTIFICATION FOR RELIEF

The type and frequency of examinations proposed for the nozzles are the same as were in effect for the 2nd inspection interval. Based on the reliable operating history of this and similar vessel nozzles at other plants, and the satisfactory remote visual examination results from the inspection performed in 1999, the granting of this relief to perform visual, VT-2 examination of the pressurizer nozzles during system pressure test will not decrease the overall level of quality and safety.

The remote visual examination was not proposed as an alternate examination for the 3rd Interval pursuant to 10CFR50.55a(a)(3) (iii) that performance of this examination, if required, would result in hardship without a compensating increase in the level of quality and safety.

G. PERIOD FOR WHICH RELIEF IS REQUESTED

Relief is requested for the third inspection interval, July 21, 2000 thru July 20, 2009.

H. ATTACHMENT TO RELIEF

None

This Page Intentionally Left Blank

Indian Point 3
Third Inspection Interval
Relief Request No. 3-17 (I), Rev. 1, 07/11/00

A: ARTICLE IDENTIFICATION:

IWA-4000

B: REPAIR REQUIREMENTS

ASME Code, Section XI, IWA-4320 requires that the defect be removed or reduced in size in accordance with Article IWA. ASME Code, Section XI, IWA-4320 requires that the defect be removed or reduced in size in accordance with Article IWA-4320.

C: RELIEF REQUESTED:

Pursuant to 10 CFR 50.55a(a)(3)(ii), relief is requested on the basis that the specified requirements would result in hardship or unusual difficulty without a compensating increase in the level of quality and safety. This relief request applies to all ASME Class 3 Moderate Energy (i.e., less than or equal to 200°F or less than or equal to 275 psig maximum operating conditions) Carbon Steel and Stainless Steel Plant Service Water Piping Systems (Categories D-A, D-B, and D-C).

Relief is requested from removing defects and repairing in accordance with the design specification or the original construction code for internal wall thinning or pitting resulting from conditions such as, but not limited to microbiological corrosion and/or localized pitting corrosion.

The ASME Section XI Code Committee recognized that an alternative existed for internal wall thinning of Class 3 piping systems which have experienced degradation mechanisms such as flow-assisted corrosion and/or microbiological corrosion that would provide an acceptable repair configuration. The primary purpose for implementing this repair method is to allow for adequate time for additional examination of adjacent piping so that pipe replacement can be planned to reduce impact on system availability including Maintenance Rule applicability, availability of replacement materials and cost. This alternative repair technique involves the application of additional weld metal on the exterior of the piping system, which restores the wall thickness requirement. Code Case N-562-1 was approved by the ASME Section XI Code Committee on December 31, 1996, however, has not been incorporated into NRC Regulatory Guide 1.147 and thus is not available for application at nuclear power plants.

In addition, a portion of the IP3 Class 3 service water system is stainless steel. Application to use this code case is also requested. Application of stainless steel weld overlays has been approved by the NRC via approval of ASME Code Case N-504. The use of ASME Code

Case N-504 has been approved by the NRC in Regulatory Guide 1.147, Revision 12. Use of Code Case N-562-1 will allow a smaller rectangular overlay to be installed vs. N-504 which will contribute to lower person-rem due to increase welding time. In addition, the defects encounter in the stainless steel piping have been very localized corrosion in the weld area or due to localized pitting.

Also the Authority proposes to use the following welding processes for the weld overlay; SMAW, GTAW (manual and/or automated) and FCAW (flux cored arc welding). The overlay may be installed on water backed piping or piping that is empty.

E: ALTERNATIVE REPAIR TECHNIQUE:

IP3 will implement the requirements of Code Case N-562-1 in its entirety with the additional restrictions and exceptions as described below, for Class 3 moderate energy (i.e., ≤ 200°F and ≤ 275 psig maximum operating pressure) piping system repairs resulting from phenomenon such as flow-assisted corrosion and/or microbiological corrosion. These types of defect are typically identified by small leaks in the piping system or by pre-emptive non-code required examinations performed by the Licensee to monitor the degradation mechanisms. The repair technique described in Code Case N-562-1 will be utilized whenever engineering evaluation determines that such a repair is suitable for the particular defect or degradation being resolved. Provisions for use of this Code Case will be addressed in the Repair and Replacement Program Procedure. Those provisions will require that adjacent area be examined to verify that the repair will encompass the entire flawed area and that there are no other unacceptable degraded locations within a representative area dependent on the degradation mechanism present. An evaluation of the degradation mechanism will be performed to determine the re-examination schedule to be performed over the life of the repair. The repair will be considered to have a maximum service life of two fuel cycles unless specific approval is requested and received from the NRC to make it permanent.

The weld overlay repair will only be used for a maximum of two operating cycles at which time an ASME XI Code Repair (normally a pipe replacement) will replace the weld overlay.

Indian Point 3 has also submitted ISI Relief Request RR 3-7 that requested approval to utilize ASME Section XI Code Case N-532. Code Case N-532 provides alternatives for the documentation requirements for repair and replacement activities. Code Case N-532 allows use of Form NIS-2A in lieu of Form NIS-2 as required by Code Case N-562-1, paragraph 7.0. Therefore, IP3 will document the use of Code Case N-562-1 on Form NIS-2A in lieu of Form NIS-2.

F: JUSTIFICATION FOR RELIEF:

Code Case N-562-1 provides alternative requirements to those of IWA-4000 and for the repair of internal piping system defects or degradation. The use of Code Case N-562-1 on stainless

steel piping and fittings is similar to Code Case N-504 that is approved in Regulatory Guide 1.147, Revision 12. The ASME XI Code Committee determined that such a repair technique would ensure that an adequate level of quality and safety was being maintained. Therefore, the proposed alternative is justified per 10CFR50.55a(a)(3)(i) as the proposed repair will provide an acceptable level of quality and safety. Code Case N-562-1 has not been included in NRC Regulatory Guide 1.147 and therefore, The New York Power Authority/IP3 nuclear plant is documenting the request to apply the Code Case via this relief request. A copy of ASME Section XI Code Case N-562-1 is attached for reference. The use of Code Case N-562-1 for stainless steel piping, fittings and components is acceptable as a similar code case (N-504) is approved in NRC Regulatory Guide 1.147, revision 12.

G: IMPLEMENTATION SCHEDULE

The relief request is applicable for the Third 10-Year Interval and will be utilized upon receipt of NRC approval.

H: ATTACHMENTS TO THE RELIEF REQUEST:

Code case N-562-1.

I: USNRC RESPONSE

Submitted to NRC for review and approval.

Approval Date: July 30, 1998
See Numeric Index for expiration and any reaffirmation dates.

Case N-562-1
Alternative Requirements for Wall Thickness Restoration of Class 3 Moderate Energy Carbon Steel Piping
Section XI, Division 1

Inquiry: As an alternative to replacement or internal weld repair, what requirements may be applied for wall thickness restoration of Class 3 moderate-energy carbon steel piping systems that have experienced internal wall thinning or pitting from conditions such as, but not limited to, flow-assisted corrosion and microbiological corrosion?

Reply: It is the opinion of the Committee that areas of Class 3 moderate energy (i.e., less than or equal to 200°F or and less than or equal to 275 psig maximum operating conditions) carbon steel piping experiencing internal thinning or pitting may have the wall thickness restored externally by means of a weld-deposited carbon or low-alloy steel reinforcement on the outside surface of the piping in accordance with the following requirements. Excluded from these provisions are conditions involving corrosion-assisted cracking or any other form of cracking.

1.0 GENERAL REQUIREMENTS

(a) The wall thickness restoration shall be performed in accordance with a Repair/Replacement Plan satisfying the requirements of IWA-4150.[1]

(b) The wall thickness restoration shall meet the requirements of IWA-4000,[2] except as stated in this Case.

(c) If the minimum required thickness of deposited weld metal necessary to satisfy the requirements of para. 3.0 is greater than the nominal thickness for the size and schedule of the piping, the provisions of this Case shall not apply. In addition, the total thickness of filler metal applied over multiple repairs shall not exceed the original nominal thickness of the piping.

2.0 INITIAL EVALUATION

The material beneath the surface to which the weld overlay is to be applied shall be evaluated to establish the existing average wall thickness and the extent and configuration of degradation to be reinforced by the weld overlay. Consideration shall be given to the cause of degradation. The extent of degradation in the piping, and the effect of the repair on the piping, shall be evaluated in accordance with IWA-4160.[3]

3.0 DESIGN

3.1 General Design Requirements

(a) Unless otherwise established by theoretical or experimental analysis, or by proof testing as provided for in para. 3.3 or para. 3.4, the full thickness of the weld overlay shall extend a distance of at least s in each direction beyond the area predicted, over the design life of the restoration to infringe upon the required thickness.[4]

where

$s = \geq \frac{3}{4}\sqrt{Rt_{nom}}$

R = outer radius of the component

t_{nom} = nominal wall thickness of the component

Edges of the weld overlay shall be tapered to the existing piping surface at a maximum angle ("α" in Fig. 1) of 45 deg. Final configuration of the reinforcement shall permit the examinations and evaluations required herein, including any required preservice or inservice examinations of encompassed or adjacent welds.

[1] IWA-4140 in the 1989 Edition with the 1991 Addenda through 1995 Edition. IWA-4130 (Repair Progam) in the 1989 Edition with the 1990 Addenda and earlier Editions and Addenda.

[2] IWA-4000/7000 and IWC/IWD-4000/7000, as applicable, in the 1989 Edition with the 1990 Addenda and earlier Editions and Addenda.

[3] IWA-4150 in the 1989 Edition with the 1991 Addenda through 1995 Edition. IWA-4130 (Repair Program) in the 1989 Edition with the 1990 Addenda and earlier Editions and Addenda.

[4] Design thickness as prescribed by the Construction Code.

(b) The thickness shall be sufficient to maintain required thickness for the predicted life of the repair, and, except for the tapered edges, the overlay shall have a uniform thickness.

(c) The tensile strength of the weld filler metal for the reinforcement shall be at least that specified for the base metal to which it is applied.

(d) The predicted maximum degradation of the overlaid piping and the overlay over the design life of the restoration shall be considered in the design. The predicted degradation of the piping shall be based upon in-situ inspection and established data for similar base metals. If the weld overlay is predicted to become exposed to the corroding medium, the predicted degradation of the overlay shall be based upon established data for base metals or weld metals with similar chemical composition to that of the filler metal used for the weld overlay.

(e) The effect of weld overlay application on interior coating shall be addressed in the Repair/Replacement Plan [Repair Program].

3.2 Design

The design of weld overlays not prequalified by paras. 3.3, 3.4, or 3.5 shall be in accordance with the applicable requirements of the Construction Code or ND-3100 and ND-3600 (including Appendix II), and shall consider the weld overlay as an integral portion of the piping or component upon which it is applied (not as a weld). The allowable stress values of the base metal shall apply to the design of the deposited weld metal. The following factors shall be considered, as applicable, in the design and application of the reinforcement:

(a) The shrinkage effects, if any, on the piping.

(b) Stress concentrations caused by application of the overlay or resulting from existing and predicted piping internal surface configuration.

3.3 Proof Test Qualification as a Piping Product

As an alternative to design, the configuration of weld overlays may be qualified by performance of proof testing of a mockup in accordance with the following requirements:

(a) A satisfactory mockup burst test shall qualify the design or configuration for application in the same orientation on the same type of item, and the same location on fittings, when the following conditions are satisfied (see Fig. 1):

(1) the base metal is of the same P-No. and Group Number when impact properties are applicable, as the base metal tested;

(2) the specified minimum tensile strength of the item does not exceed that specified for the base metal tested;

(3) the average thickness of the overlay areas is at least the thickness of the mockup plug, u;

(4) the overlap on the full thickness of base metal, s, is at least that of the mockup;

(5) the transition angle at the outer edges of the overlay, α, is not greater than that of the mockup;

(6) the overlay surface finish is similar to or smoother than that tested;

(7) the maximum proportionate axial dimension, L/D, is not more than that tested;

(8) the maximum proportionate circumferential dimension, C/D, is not more than that tested;

(9) the nominal diameter is not less than one-half nor more than two times the diameter tested;

(10) the nominal thickness/diameter ratio, t/D, is not less than one-half nor more than three times the t/D, ratio tested.

(b) The mockup base shall consist of new base material of similar configuration, or type of item, as the item to be overlaid. A rounded-corner segment of the base material shall be removed to represent the maximum proportionate size (axial dimension of L and circumferential dimension of C) and location of thinning or pitting to be compensated for by the weld overlay. A plug of the same base metal and of uniform thickness u, which shall not exceed the smallest average thickness on which the overlays will be permanently applied, shall be full-penetration welded around the opening and flush with the outside surface of the piping. Alternatively, an equivalent volume of base metal may be removed from the inside surface of the mockup by machining or grinding, without need for welding in a closure plug.

(c) The mockup weld overlay shall be applied in accordance with the design or specified configuration using the specified weld filler metal. Maximum section thickness at the overlaid opening (weld metal plus base metal plug, $u + w$) shall not exceed 87½% of the nominal thickness of the piping.

(d) Straight pipe equivalent to a minimum of one pipe diameter, or one-half diameter for piping over NPS 14, shall be provided (butt-welded to the mockup, if necessary) beyond both ends of the overlay. The piping shall be capped and the completed mockup assembly shall be thoroughly vented and hydrostatically

pressure tested to bursting. To qualify the design for general application within the limits of para. 3.3(a), burst pressure shall not be less than:

$$P = \frac{2tS_{act}}{D_o}$$

where

P = minimum acceptable burst pressure, psi

t = minimum specified thickness (excluding manufacturing tolerance) of the base metal being tested, in.

S_{act} = reported actual tensile strength of the base metal being tested, psi

D_o = outside diameter of the pipe, in.

(e) If flexibility analysis was required by the original Construction Code, the effect of the weld overlay shall be reconciled with the original analysis. In this case, for rectangular-shaped overlays on piping designed to ND-3650 and aligned parallel or perpendicular to the axis of the piping, unless a lower stress intensification factor (SIF or i) is established, an SIF (i) of 2.1 shall be applied for overlays on straight pipe and adjacent welds; a stress *multiplier* of 1.7 shall be applied to the SIF (i) for standard elbows; and an SIF (i) of 2.1 shall be applied for tees and branch connections when the toe of the overlay is not less than $2\frac{1}{2}\sqrt{Rt_{nom}}$ from any branch reinforcement in Fig. 1.

3.4 Proof Test Qualification for Specific Applications

As an alternative to design by analysis or proof test qualification as a piping product, the design or configuration of weld overlays may be qualified for limited service conditions using the provisions of ND-6900. "Proof Tests to Establish Design Pressure," except that component hydrostatic testing is not required (other than as required by IWA-4000[2]). The mockups shall be fabricated and tested in accordance with the provisions of para. 3.3(b), (c), and (d), and shall be applied in accordance with the provisions and conditions of para. 3.3(a). The provisions of para. 3.3(e) shall be met.

3.5 Prequalified Design

Application of weld overlays on straight pipe, portions of tees not less than $2\frac{1}{2}\sqrt{Rt_{nom}}$ from any branch reinforcement in Fig. 1 standard elbows, and associated welds to correct limited degradation shall be exempt from the requirements of para. 3.2 through para. 3.4, provided all of the following conditions are satisfied in Fig. 1:

(a) All of the requirements of para. 3.1 apply.

(b) The provisions of para. 3.3(e) shall be met.

(c) The full thickness of weld overlay shall not exceed a maximum axial length of the greater of six in. or the outside diameter of the piping.

(d) The finished overlay shall be circular, oval, full-circumferential, or rectangular in shape.

(1) For each repair, the maximum dimension compensated by a circular overlay shall not exceed $\frac{2}{3}$ the nominal outside diameter of the piping.

(2) Rectangular overlays shall be aligned parallel with or perpendicular to the axis of the piping, and corners shall be rounded with radii not less than the overlay thickness.

(3) For oval overlays, the end radii shall not be less than $\frac{3}{4}\sqrt{Rt_{nom}}$, and the axis of the overlay shall be aligned parallel with or perpendicular to the axis of the piping.

(e) The distance between toes of adjacent overlays shall not be less than t_{nom}.

4.0 Water-backed Applications

(a) Manual application of overlays on water-backed piping shall be restricted to P-No. 1 base materials. Welding of such overlays shall use the SMAW process and low-hydrogen electrodes. In addition, the surface examination required in para. 6.0 shall be performed no sooner than 48 hours after completion of welding. For such overlays consideration should be given to using a temper bead technique similar to that described in IWA-4650.[5]

(b) Piping with wall thickness less than the diameter of the electrode shall be depressurized before welding.

5.0 INSTALLATION

(a) The entire surface area to which the weld overlay is to be applied shall be examined using the liquid penetrant or magnetic particle method, with acceptance criteria in accordance with ND-2500/5300 for the product form (base metal or weld) involved.

(b) If through-wall repairs are required to satisfy the acceptance criteria, or result from application of the

[5] IWA-4540 in the 1989 Edition with the 1991 Addenda through the 1995 Edition. IWE-4200 in the 1986 Edition with the 1988 Addenda through the 1989 Edition with the 1990 Addenda. IWE-4320 in the 1986 Edition with the 1987 Addenda and earlier Editions and Addenda.

weld overlay, they shall be accomplished by sealing with weld metal using a qualified weld procedure suitable for open-root welding. This weld shall be examined in accordance with para. 5.0(a). In addition, the first layer of overlay over the repaired area shall be examined in accordance with para. 5.0(a).

(c) Overlay weld metal shall be deposited using a grove-welding procedure qualified in accordance with Section IX and the Construction Code, Section X and Section III, or IWA-4610 and either IWA-4620 or IWA-4650.[6] The qualified minimum thickness specified in the weld procedure does not apply to the weld overlay or associated base metal repairs.[7]

(d) The surface of the weld overlay shall be prepared by machining or grinding, as necessary, to permit performance of surface and volumetric examinations required by para. 6.0. For ultrasonic examination, a surface finish of 250 RMS or better is required.

6.0 EXAMINATION

(a) The completed weld overlay shall be examined using the liquid penetrant or magnetic particle method and shall satisfy the surface examination acceptance criteria for welds of the Construction Code or ND-5300.

(b) The weld overlay, including the existing piping upon which it is applied, shall be examined to verify acceptable wall thickness.

(c) Weld overlays shall be volumetrically examined as base metal repairs when required by the Construction Code, except as follows:

(1) Weld overlays not exceeding 10 in.^{2} surface area are exempt from volumetric examination.

(2) Other weld overlays shall be exempt from volumetric examination when the finished applied thickness (w in Fig. 1) does not exceed.

(a) $\frac{1}{3}t$ for $t \leq \frac{3}{4}$ in.

(b) $\frac{1}{4}$ in. for $\frac{3}{4}$ in. $< t \leq 2\frac{1}{2}$ in.

(c) The lesser of $\frac{3}{8}$ in. or 10% of t for $t >$ $2\frac{1}{2}$ in.

where

t = finished full-section thickness of compensated area (e.g., $w + u$, in Fig. 1)

When volumetric examination is required, the full volume of the finished overlay, excluding the tapered edges, but including the volume of base metal required for the design life of the overlay, shall be examined using either the ultrasonic or radiographic method, and shall, to the depth at the surface of the existing piping, satisfy the acceptance criteria for weldments of the Construction Code or ND-5300. The volume of the existing piping, beneath the weld overlay, taken credit for in the design, shall satisfy the volumetric acceptance criteria of ND-2500/5300 for the product form, or IWA-3000.[8]

(d) Follow-up inspection shall be scheduled as necessary to confirm any design assumptions relative to rate or extent of future degradation.

7.0 DOCUMENTATION

Use of this Case shall be documented on an NIS-2 Form.

[6] IWA-4500 and either IWA-4510 or IWA-4540 in the 1989 Edition with the 1991 Addenda through 1995 Edition. IWA-4510 or IWE-4200 in the 1986 Edition with the 1988 Addenda through 1989 Edition with the 1990 Addenda. IWB-4320 or IWE-4320 in the 1986 Edition with the 1987 Addenda or earlier Editions and Addenda.

[7] Exception to IWA-4000.

[8] IWA-3000 and IWB-3514 in the 1989 Edition with the 1990 Addenda and earlier Editions and Addenda.

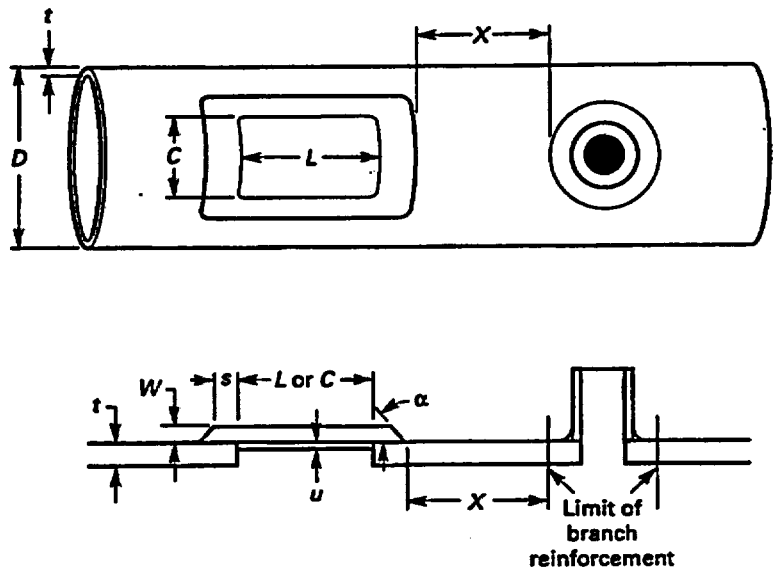

$X \geq 2^1/_2 \sqrt{Rt_{nom}}$

FIG. 1

This Page Intentionally Left Blank

RELIEF REQUEST NUMBER 3-18 (I), Rev. 0, 06/14/00
(Page 1 of 2)

A. COMPONENT IDENTIFICATION

Code Class:	1
References:	Table IWB-2500-1, Figure IWB-2500-8
Examination Category:	B-F
Item Number:	B5.10
Description:	Examination of Reactor Vessel Nozzle to Safe End Weld

B. CODE REQUIREMENT

Table IWB-2500-1, Category B-F, requires a surface and a volumetric examination of the nozzle-to-safe end welds of the Reactor Vessel during each inspection interval.

C. RELIEF REQUESTED

Indian Point 3 requests relief from performing the code required surface examination of the nozzle-to-safe end welds of the Reactor Vessel. Pursuant to 10CFR50.55a(g)(5)(iii), relief is requested from performance of the surface examination on the basis that the implementation of Code requirements is impractical.

D. BASIS FOR RELIEF

The reactor vessel cavity and RPV support system were designed and fabricated to Codes in effect during the late 1960s. The Codes used did not provide for full access for inservice inspection. The access which is available would permit examination of only a very limited amount of the O.D. surface.

The only access to the reactor nozzle safe ends from the outside surface would be through removable plugs in the primary shield. These plugs are located above the nozzle safe ends and would be removable through the refueling cavity floor. With the plugs removed, the top insulated surfaces (approximately 25 %) of the nozzle safe-ends would be visible; however, the fixed insulation, designed as non-removable, precludes surface examination.

RELIEF REQUEST NUMBER 3-18 (I), Rev. 0
(Page 2 of 2)

Insulation modifications to permit surface examination, even for a limited 25% of the weld area, are considered impractical for the following reasons: 1) a high exposure field on contact, 2) extremely confined work area, 3) restrictive clothing required for anti-contamination, 4) hazards associated with removal of asbestos insulation, 5) the minimal value in determining the overall integrity of the weld that would be derived from the limited inspection possible, and 6) the requirement to use non-asbestos material, of differing insulation performance, to reinsulate the examination areas.

E. PROPOSED ALTERNATE EXAMINATION

The subject welds are dissimilar metal welds between the carbon steel nozzle forging and the stainless steel transition (spool) pieces of the reactor coolant piping. It is proposed that these welds be volumetrically examined at the end of the inspection interval from the inside diameter with the automated reactor vessel inspection tool.

The alternative proposed provides for a 100% volumetric examination from the I.D. using the automated reactor vessel tool. The examination techniques are the same as those employed during the second interval and are adequate to detect a significant flaw. The automated reactor vessel inspection tool and the associated procedure have been demonstrated to be capable of detecting OD surface-connected defects from the ID. The test block used has defects which were cracks and not machined notches.

F. JUSTIFICATION ON FOR RELIEF

Since the examination techniques employed in the proposed alternate examination will be capable of detecting any deleterious flaws, granting of this relief will not decrease the overall level of plant quality and safety.

G. PERIOD FOR WHICH RELIEF IS REQUESTED

Relief is requested for the third inspection interval, July 21, 2000 thru July 20, 2009.

H. ATTACHMENT TO THIS RELIEF

None

This Page Intentionally Left Blank

Indian Point #3
Third Inservice Inspection Interval
Relief Request No. 3-19, Rev. 1, 07/11/00

A. ARTICLE/COMPONENT IDENTIFICATION:

The component for which relief is requested is the shell to flange weld, Examination Category B-A, Item Number B1.30 of IWB-2500, Table IWB-2500-1, ASME Section XI, 1989 Edition. (All future references to ASME Section XI requirements are taken from the 1989 Edition).

B. CODE REQUIREMENTS:

ASME Section XI, IWB-2420 (a) requires the repetition of the sequence of component examinations, which was established during the first inspection interval during successive intervals.

ASME Section XI, IWB-2500, Table IWB-2500-1, Examination Category B-A requires a volumetric examination of the shell to flange weld (Item B1.30) during the first inspection period of the interval and during each successive inspection interval.

C. RELIEF REQUESTED:

Relief is requested from performing the code required volumetric examinations on the shell to flange weld during the first period of the third ten-year inspection interval. Rather, the entire shell to flange weld examination will be deferred to no later than the third period of the inspection interval. The examination will be performed in conjunction with the RPV 10 year ISI.

D. BASIS FOR RELIEF:

Pursuant to 10 CFR 50.55a(a)(3)(ii), relief is requested on the basis that the specified requirements would result in hardship or unusual difficulty without a compensating increase in the level of quality and safety.

The 1989 ASME XI code which applies to IP3 requires that a partial examination is required for the shell to flange weld for the third ten year Inservice Inspection (ISI) plan for the Indian Point 3 plant. Examination Category B-A, item B1.30, note 4, requires that approximately 50% of the shell to flange weld be examined by the end of the first inspection period.

This relief request defers examination of the entire shell to flange weld until the third inspection period of the interval, in conjunction with the RPV 10-year ISI examinations. However, deferral of the entire exam to the third period does not follow the sequence of examinations followed during the previous intervals. Therefore, relief is also requested from section IWB-2420 (a) of ASME, Section XI. This deferral will allow the inspection of the shell to flange weld to coincide with the inspections of the reactor pressure vessel (RPV) shell welds. Performing the inspection of the shell to flange weld during the same outage as the RPV shell welds affords the following advantages.

- The inspection of the shell to flange weld, in conjunction with the inspection of the RPV shell welds, reduces the radiation exposure to plant workers. If the shell to flange weld is inspected as currently scheduled (50 percent during the first inspection period and 50 percent during the third period of the inspection interval), these examinations will be completed manually and requires access the vessel flange twice during the 10 year interval which increases critical path outage time. If the inspection of the shell to flange weld is deferred until the latter portion of the interval, then the inspection can be done in conjunction with the RPV shell welds and decreases overall critical path time. The coordination of the vessel flange inspection in conjunction with the RPV 10 year ISI is expected to reduce person-rem exposure as the flange inspection will be schedule for only one time during the interval. In addition, coordinating this work with the RPV 10 year ISI inspection will reduce critical path by inspecting the vessel flange weld only once in a 10 year interval.

- The inspection of the entire shell to flange weld during the latter portion of the interval, in conjunction with the RPV shell welds, reduces the outage time and cost associated with this inspection as it will be done once in a 10 year interval vs. code requirements. This also reduces person-rem and the risk of contamination to inspection personnel, as this examination will only be completed once in the 10 year ISI interval.

- 100% of the vessel to flange weld was inspected during the previous refueling outage (Refueling outage 10 – Fall, 1999) at the end of the 2nd 10-year ISI interval. No indications were noted.

E. ALTERNATIVE EXAMINATIONS:

IP3 will perform the code required shell to flange exam using a manual inspection technique <u>or</u> a remote controlled, automated inspection tool in the 3rd period of the 3rd 10 year ISI interval (present interval) in conjunction with the RPV 10 year ISI inspection.

F. IMPLEMENTAION SCHEDULE:

This relief request will be implemented during the 3rd 10-Year Inservice Inspection (ISI) Interval, July 21, 2000 thru July 20, 2009.

G. JUSTIFICATION FOR RELIEF:

Deferral of the examination of the reactor vessel shell to flange weld to the end of the inspection interval will provide an acceptable level of safety and quality. IP3's shell to flange weld was manually examined 100% during the second ten-year interval in 1999. These exams did not reveal any rejectable indications or service related defects. Therefore, based upon a lack of any rejectable indications, deferral of the third 10-year interval exams until the third period does not constitute a safety hazard. Therefore, requiring a partial inspection of the flange weld during RO 11 or 12 (1st period) would constitute an exposure, economic and schedule hardship without a compensating increase in quality or safety.

The proposed alternative would provide an acceptable level of quality and safety as allowed by 10CFR50.55(a)(3)(ii). In addition, IP3 will be notified if any flaws are detected at other Nuclear Power Plants through the Operating Experience Program. If this were to occur the schedule for inspection would be reevaluated.

A similar relief request was approved for NYPA's FitzPatrick plant in a NRC letter dated 2/29/2000.

H. ATTACHMENTS TO THE RELIEF:

None

I. USNRC RESPONSE

Submitted

This Page Intentionally Left Blank

Indian Point 3
Third Inservice Inspection Interval
Relief Request No. 3-20 (I), Rev. 0

A. COMPONENT IDENTIFICATION:

Code Class:	1
Reference:	Table IWB-2500-1
Examination Category:	B-A, B-D
Item Number:	See table below
Description:	Pressure Retaining Welds in Reactor Vessel; Full Penetration Welds of Nozzles in vessels examined.

B. EXAMINATION REQUIREMENT:

Rules for In-Service Inspection of Nuclear Power Plant Components, Section XI, 1989 Edition

Exam Cat.	Item no.	Examination Requirements
B-A	B1.10 B1.11 B1.12	Essentially 100% volumetric examination of longitudinal and circumferential shell welds (does not include shell to flange weld) In accordance with Appendix I, Article I-2000.
B-A	B1.20 B1.21 B1.22	Essentially 100% volumetric examination of accessible length of circumferential and meridional head welds in accordance with Appendix I, Article I-2000.
B-A	B1.30	Essentially 100% volumetric examination of the shell to flange weld in accordance with Appendix I, Article I-2000.
B-A	B1.40	Essentially 100% volumetric and surface examination of head to flange weld in accordance with Appendix I, Article I-2000.
B-D	B3.90 B3.100	Essentially 100% volumetric examination of nozzle-to-vessel welds in accordance with Appendix I, Article I-2000. Nozzle inner radius areas.

ASME Code Case N-460: Alternative Examination Coverage for Class 1 and Class 2 Welds

C. RELIEF REQUESTED:

Pursuant to 10 CFR 50.55a (a)(3)(i), IP3 requests to use the alternative requirements of Code Case N-622, Chapters A.2, A.3, B-1000 through B-5000 inclusive and Supplements 1, 4, 5A, 6, 7 and 13, in lieu of the requirements of Appendix I, Article I – 2000 for the performance of the required volumetric examinations of Class 1 component welds as specified in Table IWB-2500-1 Category B-A and B-D of the 1989 Edition of ASME Section XI. These examinations will be performed during the 3rd 10-Year Inspection Interval.

D. BASIS FOR RELIEF:

In the 3rd 10-Year Inspection Interval, IP3 is required to perform Inservice examinations of selected welds in accordance with the requirements of 10 CFR 50.55a, plant Technical Specifications, and the 1989 Edition of the American Society of Mechanical Engineers Boiler and Pressure Vessel Code, Section XI, Rules for In-Service Inspection of Nuclear Power Plant Components. This Code edition invokes the examination requirements of Appendix I, Article I-2000 that essentially prescribes 20-year old examination methodology. This examination methodology is typically "qualified" by calibration on side drilled holes in a calibration block fabricated from similar material.

Later Code editions and Code Case N-622 describe a performance demonstration based examination methodology that has been proven to be superior to the current requirements. These demonstrations have been conducted using full sized vessel specimens that contain fatigue cracks replicating the actual conditions that could be encountered.

We believe the use of Code Case N-622, which delineates this newer demonstrated examination methodology, will provide added assurance that the reactor vessel welds have remained free of service related flaws thus enhancing quality and ensuring plant safety and reliability. This will be particularly evident in the important under-clad region where the performance demonstrations have resulted in examination technique enhancements that transcend Code requirements.

Furthermore, examinations performed using these newer techniques will allow us to achieve greater coverage of the Code required volume, thereby eliminating or substantially reducing areas of reduced coverage. The implementation of the methodology of Code Case N-622 is also expected to reduce on-vessel examination time by as much as 24 hours, which translates to significant cost savings and reduced personnel radiation exposure.

E. ALTERNATIVE EXAMINATIONS:

1) Perform examinations in accordance with Code Case N-622.

2) Conduct mechanized ultrasonic examinations to the maximum extent to achieve essentially 100% of the Code required volume of all welds using Performance Demonstration Initiative (PDI) qualified procedures and personnel.

3) Perform periodic system pressure tests per Category B-P, Table IWB-2500-1.

F. IMPLEMENTATION SCHEDULE:

3rd 10-Year Inservice Inspection Interval, from July 21, 2000 through July 20, 2009.

G. ATTACHMENTS TO THE RELIEF:

Code Case N-622

H. ADDITIONAL INFORMATION:

Code Case N-622 contains a typographical error in the first line of B-3130 (a). The reference is given as [B-2100(d)]; the correct reference should be [B-2100(e)].

Approval Date: February 26, 1999
See Numeric Index for expiration and any reaffirmation dates.

Case N-622
Ultrasonic Examination of RPV and Piping, Bolts, and Studs
Section XI, Division 1

Inquiry: What alternative requirements may be used for ultrasonic examination of RPV, piping, bolts, and studs in lieu of Appendices I and VIII?

Reply: It is the opinion of the Committee that, in lieu of the ultrasonic examination requirements for RPV and piping and bolts and studs in lieu of Appendices I and VIII, the following requirements may be used.

CONTENTS

Chapter A

A-1000	Examination Coverage	1069
A-1100	Piping	1069
A-1200	Reactor Pressure Vessel Shell Welds	1069
A-1300	Reactor Pressure Vessel Nozzle-to-Shell Welds	1069

Chapter B

B-1000	Scope	1071
B-1100	General	1071
B-2000	General Examination System Requirements	1073
B-2100	Procedure Requirements	1073
B-2200	Personnel Requirements	1073
B-3000	Qualification Test Requirements	1075
B-3100	Qualification Test Requirements	1075
B-3110	Detection	1075
B-3120	Sizing	1075
B-3130	Essential Variable Ranges	1075
B-3140	Requalification	1076
B-4000	Essential Variable Tolerances	1077
B-4100	Procedure Modifications	1077
B-4110	Pulsers, Receivers, and Search Units	1077
B-4120	Search Unit Characterization	1078
B-4200	Computerized System Algorithms	1078
B-4300	Calibration Methods	1078
B-5000	Record of Qualification	1079
B-5100	General	1079

Appendices

I	Evaluating Electronic Characteristics of Ultrasonic Systems	1081
II	Qualification Requirements for Wrought Austenitic Piping Welds	1085
III	Qualification Requirements for Ferritic Piping Welds	1087
IV	Qualification Requirements for the Clad-to-Base Metal Interface of Reactor Vessel	1089
V-A	Qualification Requirements for Nozzle Inside Radius Section Examinations from the Inside Surface	1091
V-B	Qualification Requirements for Nozzle Inside Radius Section Examinations from the Outside Surface	1093
VI	Qualification Requirements for Reactor Vessel Welds Other Than Clad-to-Base Metal Interface	1097
VII	Qualification Requirements for Nozzle-to-Vessel Weld Examinations Conducted from the Bore	1101
VIII	Qualification Requirements for Bolts and Studs	1103

XIII Requirements for Coordinated Implementation of Selected Aspects of Appendices IV and VI 1105

Figures
I-1A System Configuration 1082
I-1B Test Configuration 1083
I-2A Frequency Response Curve 1084
V-B1 Misorientation Angle 1094
V-B2 Flaw Distribution Zones 1095
VI-1 Definition of Statistical Parameters 1100

Tables
B-3110-1 Component Qualification Supplements 1075
II-1 Performance Demonstration Detection Test Acceptance Criteria 1086
IV-1 Performance Demonstration Detection Test Acceptance Criteria 1090
VI-1 Detection and Sizing Test Flaws and Locations 1099
VI-2 Performance Demonstration Detection Test Acceptance Criteria 1099
VII-1 Flaw Locations and Orientations 1101
VIII-1 Maximum Notch Dimensions 1103

CHAPTER A-1000
EXAMINATION COVERAGE

A-1100 PIPING

(a) Piping shall be examined in two axial directions. When examination in the circumferential direction is required, the circumferential examination shall be performed in two directions.

(b) Alternatively, when examinations of ferritic welds from both sides is not possible, full coverage credit may be claimed from a single side using a procedure qualified for single-side examination in accordance with Appendix III. When examination of austenitic welds from both sides is not possible, full coverage credit may be claimed from a single side using a procedure qualified for single-side examination in accordance with Appendix II, with all flaws on the opposite side of the weld.

A-1200 REACTOR PRESSURE VESSEL SHELL WELDS

(a) The clad-to-base metal interface region, including at least 15% T (measured from clad-to-base metal interface), shall be examined from four orthogonal directions, using a procedure qualified in accordance with Appendix IV.

(b) If the clad-to-base metal interface procedure demonstrates detectability of flaws with a tilt angle relative to the weld centerline of at least 45 deg., the remainder of the examination volume is considered fully examined if coverage is obtained in one parallel and one perpendicular direction. This shall be accomplished using a procedure and personnel qualified for single-side examination in accordance with Appendix VI. Subsequent examinations may be performed using examination techniques qualified for a tilt angle of at least ±10 deg.

A-1300 REACTOR PRESSURE VESSEL NOZZLE-TO-SHELL WELDS

(a) Examinations Conducted from the Inside

(1) The clad-to-base metal interface and the adjacent examination volume to a depth of at least 15% T (measured from the clad-to-base-metal interface) shall be examined from four orthogonal directions, using a procedure qualified in accordance with Appendix IV.

(2) When the examination volume define in (1) cannot be effectively examined in all four directions, the examination shall be augmented by examination from the nozzle bore, using a procedure qualified in accordance with Appendix VII.

(3) The remainder of the examination volume not covered by (1) or by a combination of (1) and (2) shall be examined in at least one radial direction from:

(a) the nozzle bore using a procedure qualified in a accordance with Appendix VII, or

(b) the vessel shell using a procedure qualified for single-sided examination in accordance with Appendix VI.

(b) Examinations Conducted from the Outside

(1) The clad-to-base metal interface and the adjacent examination volume to a depth of at least 15% T, (measured from the clad-to-base metal interface) shall be examined from on radial and two opposing circumferential directions using a procedure qualified in accordance with Appendix IV, for examination performed in the radial direction, and Appendix V-B, for examination performed in the circumferential directions.

(2) The remainder of the examination volume not covered by (1) shall be examined in at least one radial direction using a procedure qualified for a single-side examination in accordance with Appendix VI.

CHAPTER B-1000
SCOPE

B-1100 GENERAL

(a) This Chapter provides requirements for performance demonstration for ultrasonic examination procedures and personnel used to detect and size flaws.

(b) Each organization (e.g., Owner or vendor) shall have a written program that insures compliance with this Case. Each organization that performs ultrasonic examinations shall qualify its procedures and personnel in accordance with this Case. The organization may contract implementation of the program.

(c) Performance demonstration requirements apply to personnel who detect, record, or interpret indications or size flaws in welds or components.

(d) The performance demonstration requirements specified in this Case do not apply to personnel whose involvement is limited to mounting a scanning device, marking pipe, or other situations where knowledge of ultrasonics is not important.

(e) Operator of fully automated data collection systems need not be qualified to the requirement of this Case, provided that:

(1) the data analyst is qualified to the requirements of this Case, and is responsible for system calibration and verifying system sensitivity;

(2) the analyst is responsible for establishment of examination sensitivity; and

(3) the system meets the definition of automated system, below.

(f) Systems used for acquisition (collection) of ultrasonic data are classified as automated, semi-automated, or manual, as defined below.

(1) Automated system. A system that is fully software-controlled by input parameters or specification from an operator and that digitally acquires and records the complete real-time output for each transducer during the collection process. All system calibrations, examination, and scanning parameters used during collection are verifiable during off-line analysis. All required real-time information (e.g., A-scan waveforms, C-scan or B-scan images) can be processed off line for analysis. No adjustments to the ultrasonic parameters can be made without knowledge and concurrence of the analyst.

(2) Semi-automated system or manual system. A system that is not fully software-controlled, i.e., that requires an operator to make ultrasonic parameter adjustments during the collection process, that will affect the off-line analysis. The following are some characteristics of semi-automated or manual systems:

(a) complete real-time output for each transducer is not recorded;

(b) all system calibrations, and examination, and scanning parameters cannot be verified during off-line analysis;

(c) the examination cannot be reconstructed from the recorded data;

(d) adjustments to the ultrasonic parameters can be made without knowledge and concurrence of the analyst.

CHAPTER B-2000
GENERAL EXAMINATION SYSTEM REQUIREMENTS

B-2100 PROCEDURE REQUIREMENTS

(a) The examination procedure shall contain a statement of scope that specifically defines the limits of procedure applicability (e.g., materials, thickness, diameter, product form).

(b) The procedure shall provide specific instructions with sufficient detail to assure that the Owner can determine that the qualified procedure is followed during field applications.

(c) The examination procedure shall specify a single value or a range of values for the variables listed in B-2100(e).

(d) Any calibration method may be used provided it is described and complies with B-2100(e)(5).

(e) The examination procedure shall specify the following essential variables:

(1) instrument or system, including manufacturer and model or series of pulser, receiver, and amplifier, including:

(a) instrument settings for center frequency, pulse width, and filtering or smoothing;

(b) operation, e.g., voltage, spike, square wave, tone burst;

(2) search units, including:

(a) center frequency and either bandwidth or waveform duration as defined in B-4000;

(b) mode of propagation and nominal inspection angles;

(c) number, size, shape, and configuration of active elements and wedges or shoes;

(3) search unit cable, including:

(a) type;

(b) maximum length;

(c) maximum number of connectors;

(4) detection and sizing techniques, including:

(a) scan pattern and beam directions;

(b) maximum scan speed;

(c) minimum and maximum pulse repetition rate (bolting only);

(d) minimum spatial sample spacing in scan and index directions, i.e., sample surface distance between points where an A-scan is recorded (automated systems);

(e) extent of scanning and action to be taken for access restrictions;

(5) methods of calibration for detection and sizing (e.g., actions required to insure that the sensitivity and accuracy of the signal amplitude and time outputs of the examination system, whether displayed, recorded, or automatically processed, are repeated from examination to examination);

(6) inspection and calibration data to be recorded;

(7) method of data recording;

(8) recording equipment (e.g., strip chart, analog tape, digitizing) when used;

(9) methodology and criteria for the discrimination of indications (e.g., geometric versus flaw indications and for length and depth sizing of flaws);

(10) surface preparation requirements.

(11) any other identifiable factor that could substantially influence the effectiveness of the examination.

B-2200 PERSONNEL REQUIREMENTS

Personnel shall meet the requirements of Appendix VII of Section XI and shall be qualified in accordance with B-3000.

CHAPTER B-3000
QUALIFICATION TEST REQUIREMENTS

B-3100 QUALIFICATION TEST REQUIREMENTS

B-3110 DETECTION

(a) Qualification test specimens shall meet the requirements of the appropriate Appendix listed in Table B-3110-1.

(b) The examination procedure and personnel are qualified for detecting flaws upon successful completion of the performance demonstration specified in the appropriate Appendix listed in Table B-3110-1.

(c) For piping welds whose requirements are in course of preparation, the requirements of Appendix III of Section XI, as supplemented by Table I-2000-1, shall be met.

B-3120 SIZING

(a) Qualification test specimens shall meet the requirements of the appropriate Appendix listed in Table B-3110-1.

(b) The examination procedure and personnel are qualified for sizing flaws upon successful completion of the performance demonstration specified in the appropriate Appendix listed in Table B-3110-1.

(c) For piping welds whose requirements are in course of preparation, the requirements of Appendix III of Section XI, as supplemented by Table I-2000-1, shall be met.

(d) RMS error shall be calculated as follows:

$$\text{RMS} = \left[\frac{\sum_{i=1}^{n}(m_i - t_i)^2}{n}\right]^{1/2}$$

where

m_i = measured flaw size
t_i = true flaw size
n = number of flaws measured

TABLE B-3110-1
COMPONENT QUALIFICATION SUPPLEMENTS

Component Type	Applicable Appendix
Piping Welds	
Wrought Austenitic	2
Ferritic	3
Cast Austenitic	[Note (1)]
Dissimilar Metal	10
Overlay	11
Coordinated Implementation	12
Vessels	
Clad-to-Base Metal Interface Region	4
Nozzle Inside Radius Section	5A or 5B
Reactor Vessel Welds Other Than Clad-to-Base Metal Interface	6
Nozzle-to-Vessel Weld	7
Coordinated Implementation	13
Bolts and Studs	8

NOTE:
(1) In the course of preparation.

B-3130 ESSENTIAL VARIABLE RANGES

(a) Any two procedures with the same essential variables [B-2100(d)] are considered equivalent. Pulsers, search units, and receivers that vary within the tolerances specified in B-4100 are considered equivalent. When the pulsers, search units, and receivers vary beyond the tolerances of B-4100, or when the examination procedure allows more than one value or range for an essential variable, the qualification test shall be repeated at the minimum and maximum value as applicable from B-4100 (e.g., at the lowest and highest allowed settings or frequencies) for each essential variable with all other variables remaining at nominal values. Changing the essential variable may be accomplished during successive personnel performance demonstrations. Each

examiner need not demonstrate qualification over the entire range of every essential variable.

(b) When the procedure does not specify a range for essential variables and establishes criteria for selecting values, the criteria shall be demonstrated during the procedure qualification.

B-3140 REQUALIFICATION

When a change in an examination procedure causes an essential variable to exceed a qualified range, the examination procedure shall be requalified for the revised range.

CHAPTER B-4000
ESSENTIAL VARIABLE TOLERANCES

B-4100 PROCEDURE MODIFICATIONS

B-4110 PULSERS, RECEIVERS, AND SEARCH UNITS

Components of the same make, model number and physical description are substitutable without further consideration. The qualified procedure may be modified to substitute or replace pulsers, receivers, or search units without requalification when the following conditions are met.

(a) Instruments with reject, damping, or pulse tuning controls, have discrete settings specified in the procedure.

(b) Pulsers and receivers shall be evaluated using ASTM E 1324, Guide for Measuring Some Electronic Characteristics of Ultrasonic Instruments, with the following exceptions:

(1) The lower (F_L) and upper (F_U) limits for receivers shall be determined between frequencies that are 6 dB below the peak frequency.

(2) The receiver center frequency (F_C) shall be determined by:

$$F_C = \frac{F_L + F_U}{2}$$

(3) The receiver bandwidth (BW) shall be determined by:

$$BW = \frac{F_U - F_L}{F_C} \times 100$$

(c) Search units shall be evaluated using ASTM E 1065, Evaluation of the Characteristics of Ultrasonic Search Units.

(d) Examination systems shall be evaluated using Appendix I.

(e) Replacements of the instrument or the pulser section of the instrument system shall be within the following tolerances of the original equipment as measured into a 50 ohm, noninductive, noncapacitive, resistive load:

(1) pulse amplitude, ±10%;

(2) pulse rise time, ±10%;

(3) pulse duration, ±10%.

(f) Replacements of the instrument or the receiver section of the instrument system shall be within the following tolerances of the original equipment:

(1) lower and upper frequency limits at the –6 dB point, ±0.2 MHz;

(2) center frequency for instrument receivers with bandwidths less than 30%, ±5%;

(3) center frequency for instrument receivers with bandwidths equal to or greater than 30%, ±10%.

(g) Replacement search units of the same manufacturer's model, size, and nominal frequency may be used without requalification.

(h) Replacement search units not of the same manufacturer's model, that are of the same nominal size and frequency, shall be within the following tolerances of the original search units:

(1) propagation mode is the same;

(2) measured angle, ±3 deg.;

(3) center frequency for search units with bandwidths less than 30%, ±5%;

(4) center frequency for search units with bandwidths equal to or greater than 30%, ±10%;

(5) waveform duration, ±½ cycle or 20%, whichever is greater (measured at –20 dB), or bandwidth, ±10%.

(i) As an alternative to (e) through (h) above, equipment replacement including interconnecting cabling, is acceptable if the examination system is within the following tolerances of the original system, as measured according to the requirements of Appendix I:

(1) system center frequency ±5%, for examination systems with bandwidths less than 30%, ±5%

(2) system center frequency ±10%, for examination systems with bandwidths equal to or greater than 30%, ±10%

(3) system bandwidth, −10% and no upper limit.

B-4120 SEARCH UNIT CHARACTERIZATION

Characterization measurements of the search unit shall be made using either a sinusoidal tone burst technique or shock excitation. When using shock excitation, the characterization pulser and UT instrument pulser shall be the same within the limits of B-4110(e).

B-4200 COMPUTERIZED SYSTEM ALGORITHMS

When the performance demonstration uses prerecorded data, algorithms for automated decisions may be altered when the altered algorithms are demonstrated to be equivalent to those qualified. When the performance demonstration results meet the acceptance requirements of B-3000, the algorithm shall be considered qualified.

B-4300 CALIBRATION METHODS

Alternative calibration methods may be demonstrated equivalent to those described in the qualified procedure without requalification. This demonstration of equivalence shall be conducted for each beam angle and mode of propagation to which it applies, as follows.

(a) Calibrate the examination system in accordance with the alternative methods.

(b) Compare the sensitivity of the alternative calibration method to that of the qualified calibration method.

(c) The alternative calibration method is acceptable when the system sensitivity is no more than 2 dB below that obtained by the qualified method.

CHAPTER B-5000
RECORD OF QUALIFICATION

B-5100 GENERAL

The organization's performance demonstration program shall specify the documentation that shall be maintained as qualification records. Documentation shall include identification of personnel, NDE procedures, and equipment and specimens used during qualification, and results of the performance demonstration.

APPENDIX I
EVALUATING ELECTRONIC CHARACTERISTICS OF ULTRASONIC SYSTEMS

1.0 SYSTEM FREQUENCY CHARACTERISTICS

1.1 The frequency response, also known as the frequency spectrum, shall be determined by measuring the amplitude of the pulse echo response from a target as a function of frequency. This response shall be used as a basis for establishing the center frequency and bandwidth of the ultrasonic system.

CAUTION: The required output signal test point from the ultrasonic instrument may require access to ultrasonic circuitry inside the instrument chassis. The use of high impedance test probes may also be required if the signal of interest is not buffered.

1.2 Connect the ultrasonic instrument including the search unit and, if applicable, the wedge, as shown in Fig. I-1A. The output signal from the ultrasonic instrument that is used in data analysis for flaw detection or flaw sizing (i.e., the output signal after amplification, filtering, and video detection) shall be input to a device that is capable of measuring the frequency spectrum (e.g., a spectrum analyzer or a digitizing circuit with a software package that determines the frequency response of waveforms). If a digitizing circuit is used, the rate of digitizing shall be at least five times the nominal (labeled) frequency of the search unit.

(a) If the receiver or transmitter provides variable signal filtering or frequency control, the signal controls shall be set as specified in the examination procedure. Check all connections in the test setup to ensure that it is safe to turn on the ultrasonic system.

(1) Flat or nonfocused search units shall be adjusted so that the distance (Z_o) from the face of the search unit to the target is 2 in. (see Fig. I-1B). A smooth glass block with minimum dimensions 2 in. × 2 in. × 1 in. thick is the target. Using a manipulator, adjust the search unit angle with respect to the block until the return echo is maximized indicating that the sound field is perpendicular to the block. Adjust the receiver section gain controls until the ultrasonic signal amplitude from the block is 80% of full scale without saturating the ultrasonic signal. Plot the frequency spectrum of the ultrasonic signal as shown in Fig. I-2A.

(2) Determination of the frequency response for focused search units shall follow the same procedure for flat search units, except that the distance Z_o shall be adjusted to maximize echo from the target.

1.3 System Frequency Response Results

(a) Lower Frequency Limit (F_L) — The lower frequency limit (MHz) at a specific frequency control setting is the lowest frequency on the frequency response curve that is 6 dB below the maximum amplitude as shown in Fig. I-2A.

(b) Upper Frequency Limit (F_U) — The upper frequency limit (MHz) at a specific frequency control setting is the highest frequency on the frequency response curve that is 6 dB below the maximum amplitude as shown in Fig. I-2A.

(c) Center Frequency (F_C) — The center frequency (MHz) at a specific frequency control setting shall be calculated in accordance with B-4110(b)(2).

(d) Bandwidth (BW) — The bandwidth (%) at a specific frequency control setting shall be calculated in accordance with B-4110(b)(3).

(e) The system frequency response results, (a) through (d) above, shall be obtained for the remaining receiver and transmitter control module setting combinations used in the performance demonstration. These values shall be recorded.

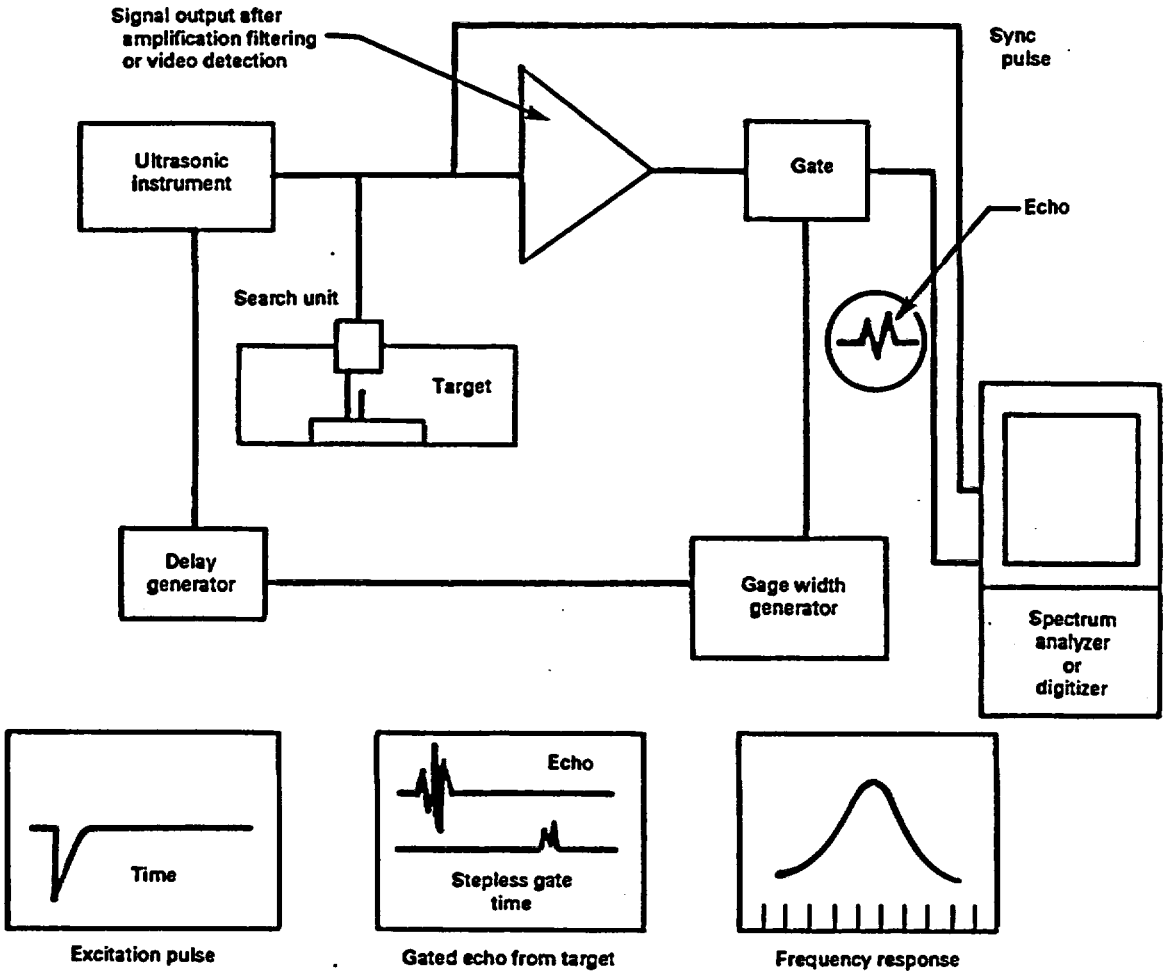

FIG. I-1A SYSTEM CONFIGURATION

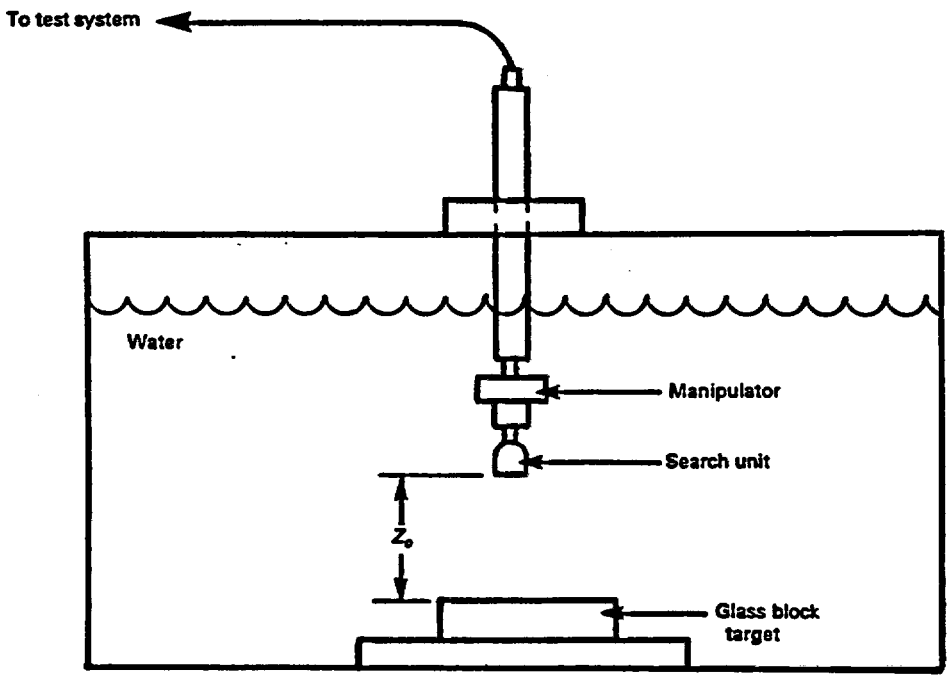

FIG. I-1B TEST CONFIGURATION

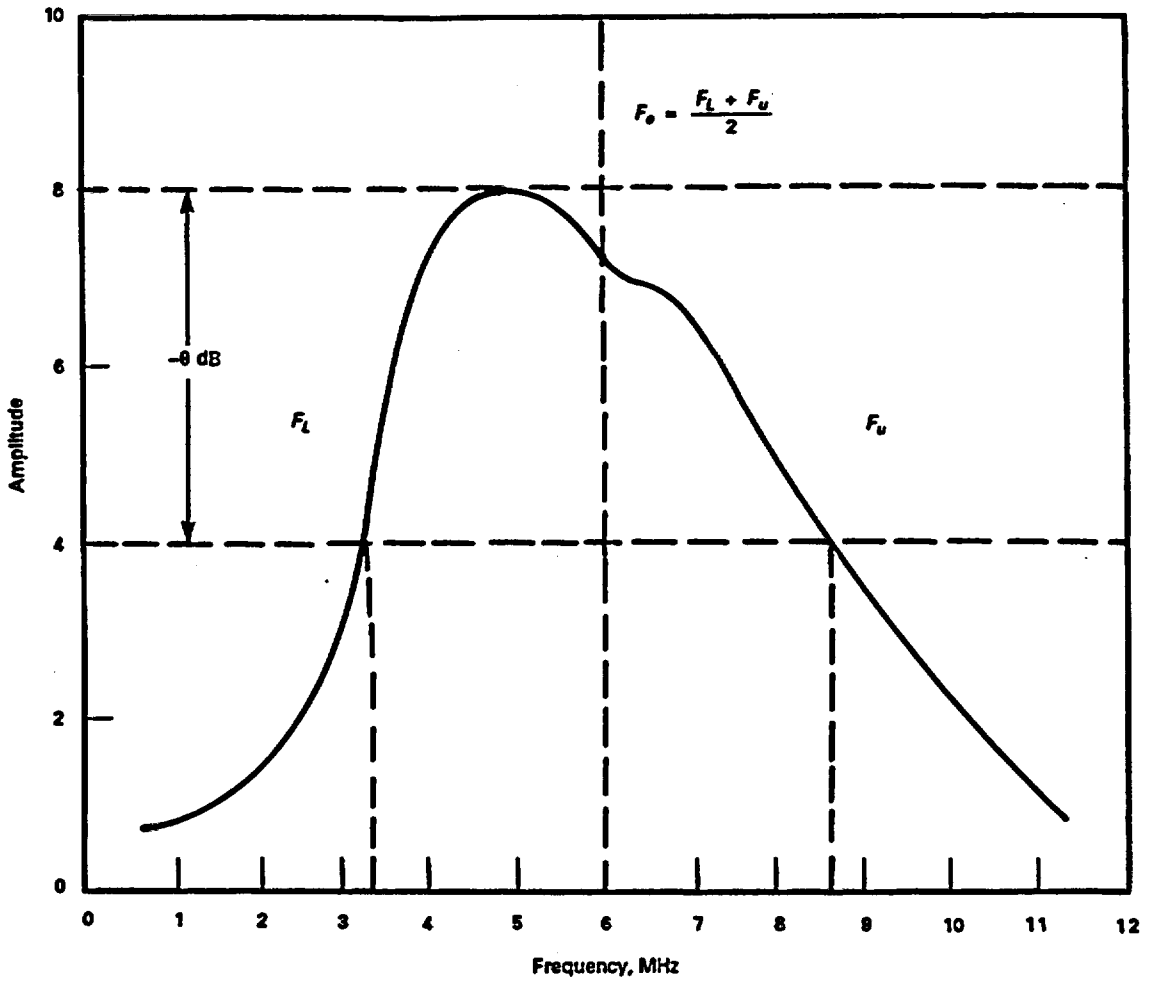

FIG. I-2A FREQUENCY RESPONSE CURVE

APPENDIX II
QUALIFICATION REQUIREMENTS FOR WROUGHT AUSTENITIC PIPING WELDS

1.0 SPECIMEN REQUIREMENTS

Qualification test specimens shall meet the requirements listed herein, unless a set of specimens is designed to accommodate specific limitations stated in the scope of the examination procedure (e.g., pipe size, access limitations). The same specimens may be used to demonstrate both detection and sizing qualification.

1.1 General

(a) Specimens shall have sufficient volume to minimize spurious reflections that may interfere with the interpretation process.

(b) The specimen set shall consist of at least four specimens having different nominal pipe diameters and thicknesses. The set shall include pipe specimens not thicker than 0.1 in. more than the minimum thickness, nor thinner than 0.5 in. less than the maximum thickness for which the examination procedure is applicable. It shall include the minimum, ± NPS $^1/_2$, and maximum pipe diameters and thicknesses for which the examination procedure is applicable. If the procedure is applicable to pipe diameters of 24 in. or larger, the specimen set must include at least one specimen 24 in. or larger in diameter but need not include the maximum diameter.

(c) The specimen set shall include examples of the following fabrication condition:

(1) unground weld reinforcement (crowns);

(2) wide crowns, such that the total crown width is $1^1/_2$ to 2 times the nominal pipe wall thickness;

(3) geometric conditions that normally require discrimination from flaws (e.g., counterbore, weld root conditions such as excessive I.D. reinforcement);

(4) typical limited scanning surface conditions (e.g., diametrical shrink, single-side access due to safe ends or fittings).

(d) All flaws in the specimen set shall be cracks.

(1) Mechanical fatigue cracks and either IGSCC or thermal fatigue cracks shall be used. No more than 25% of the flaws shall be mechanical fatigue cracks.

(2) At least 50% of the cracks shall be coincident with fabricated conditions described in (c) above.

1.2 Detection Specimens

(a) Specimens shall be divided into grading units. Each grading unit shall include at least 3 in. of weld length. If a grading unit is designed to be unflawed, at least 1 in. of unflawed material shall exist on either side of the grading unit. The segment of weld length used in one grading unit shall not be used in another grading unit. Grading units need not be uniformly spaced around the pipe specimen.

(b) Detection sets for personnel qualification shall be selected from Table II-1. The number of unflawed grading units shall be at least twice the number of flawed grading units.

(c) For the initial procedure qualification, detection sets shall include the equivalent of three personnel qualification sets. Extension of qualifications to qualify new values of essential variables requires at least one personnel qualification set.

(d) When the procedure is intended to detect IGSCC, at least four field-removed, IGSCC flawed grading units shall be included in the detection test set.

(e) Flawed grading units shall meet the following criteria for flaw depth, orientation, and type.

(1) A minimum of $^1/_3$ of the flaws, rounded to the next higher whole number, shall have depths between 5% and 30% of the nominal pipe wall thickness. At least $^1/_3$ of the flaws, rounded to the next higher whole number, shall have depths greater than 30% of the nominal pipe wall thickness.

(2) At least one and a maximum of 10% of the flaws, rounded to the next higher whole number, shall

be oriented axially. The remainder of the flaws shall be oriented circumferentially.

1.3 Sizing Specimens

(a) The minimum number of flaws shall be ten.

(b) Flaws in length sizing sample sets shall meet the requirements of para 1.2(c)(1), when given in conjunction with a detection test. When the length sizing test is administered independently, the flaw depth requirements do not apply.

(c) Flaws in the depth sizing sample set shall be distributed as follows:

Flaw Depth (% Wall Thickness)	Minimum Percentage of Flaws
5–30%	20%
31–60%	20%
61–100%	20%

The remaining flaws shall be in any of the above categories.

(d) When the procedure is intended to size IGSCC, at least three IGSCC flaws shall be included in the test set. These IGSCC flaws may be field-removed or fabricated by laboratory methods.

2.0 CONDUCT OF PERFORMANCE DEMONSTRATIONS

Flaw location and specimen identification shall be obscured to maintain a "blind test." All examinations shall be completed prior to grading and presenting the results to the candidate. Divulging of particular specimen results or candidate viewing of unmasked specimens after the performance demonstration is prohibited.

2.1 Detection Test

(a) Flawed and unflawed grading units shall be randomly mixed.

(b) Detection tests shall include length sizing.

2.2 Length and Depth Sizing Test

(a) Each reported flaw in the detection test shall be length sized.

(b) When only length sizing is being tested, the regions of each specimen containing a flaw to be sized shall be identified to the candidate. The candidate shall determine the length of the flaw in each region.

(c) For the depth sizing test, the regions of each specimen containing a flaw to be sized shall be identified to the candidate. The candidate shall determine the maximum depth of the flaw in each region.

3.0 ACCEPTANCE CRITERIA

3.1 Detection Acceptance Criteria

(a) Personnel demonstrations shall meet the requirements of Table II-1 for both detection and false calls.

(b) Procedure qualifications shall demonstrate detectability of each flaw, within the scope of the procedure. Successful personnel demonstrations may be combined to satisfy the requirements for procedure qualifications.

(c) If the procedure is intended to detect IGSCC, failure to detect more than one of the IGSCC flaws is unacceptable for personnel qualifications.

3.2 Sizing Acceptance Criteria

(a) The RMS error of the flaw lengths estimated by ultrasonic, as compared with the true lengths, shall not exceed 0.75 in.;

(b) The RMS error of the flaw depths estimated by ultrasonics, as compared with the true depths, shall not exceed 0.125 in.

TABLE II-1
PERFORMANCE DEMONSTRATION DETECTION TEST ACCEPTANCE CRITERIA

Detection Test Acceptance Critera		False Call Test Acceptance Criteria	
No. of Flawed Grading Units	Minimum Detection Criteria	No. of Unflawed Grading Units	Maximum Number of False Calls
5	5	10	0
6	6	12	1
7	6	14	1
8	7	16	2
9	7	18	2
10	8	20	3
11	9	22	3
12	9	24	3
13	10	26	4
14	10	28	5
15	11	30	5
16	12	32	6
17	12	34	6
18	13	36	7
19	13	38	7

APPENDIX III
QUALIFICATION REQUIREMENTS FOR FERRITIC PIPING WELDS

Qualification of examination procedures, and personnel for ferritic pipe examination shall be accomplished by satisfying the requirements of Appendix II, except that the sample material shall be ferritic and the sample set defects shall be mechanically or thermally induced fatigue cracks. In addition, the set shall include pipe specimens not thicker than 0.1 in. more than the minimum thickness, nor thinner than 1.0 in. less than the maximum thickness for which the examination procedure is applicable.

APPENDIX IV
QUALIFICATION REQUIREMENTS FOR THE CLAD-TO-BASE METAL INTERFACE OF REACTOR VESSEL

1.0 SPECIMEN REQUIREMENTS

Qualification test specimens shall meet the requirements listed herein unless a set of specimens is designed to accommodate specific limitations stated in the scope of the examination procedure. The same specimens may be used to demonstrate both detection and sizing qualifications.

1.1 Detection Specimens

(a) Specimens shall have sufficient volume to minimize spurious reflections. Specimens need not contain a butt weld. Specimen length and width shall be at least 12 in. There shall be at least 10 sq ft of clad surface in the specimen set.

(b) Specimen thickness:

(1) When the examination procedure requires the examination to be performed from the vessel I.D. (clad surface), the specimen minimum thickness shall be 3 in. or the maximum thickness of the vessel (whichever is less).

(2) When the examination procedure requires the examination to be performed from the vessel O.D. surface, the specimen shall be at least 90% of the maximum thickness to be examined.

(c) The performance demonstration shall be on the same type cladding as that to be examined, with the following exceptions:

(1) demonstration on shielded metal arc weld (SWAW) single-wire cladding is transferable to multiple-wire or strip-clad processes;

(2) demonstration of multiple-wire or strip-clad is considered equivalent but is not transferable to SMAW-type clad.

(d) The surface condition of the test specimens shall be representative of the general condition of the vessel scanning surface.

(e) The detection test matrix shall include flaws with the following description.

(1) Flaw Type. At least 70% of the flaws shall be cracks. Notches are limited to when the examination is performed from the clad surface, i.e., no corner-trap applications. Machined notches shall meet the following requirements:

(a) Notches shall have a maximum width of 0.010 in. at the tip. The width at the clad-to-base metal interface shall not exceed 0.020 in.

(b) Notches shall conform to the following:

(1) Notch depth shall not exceed 0.25 in.

(2) Notches shall be semi-elliptical.

(2) For procedure qualification, at least 40% of the flaws shall be oriented parallel to the clad direction, ±10 deg., and at least 40% shall be oriented perpendicular to the clad direction, ±10 deg. For personnel qualification, at leat 20% in either direction is sufficient.

(3) The flaw sizes shall be uniformly distributed in through-wall depths (inches) among the ranges:

(a) 0.075–0.200 in.

(b) 0.201–0.350 in.

(c) 0.351–0.550 in.

(d) 0.551–0.750 in.

(4) No flaw shall have an aspect ratio (depth/length) less than 0.1.

(5) Flaws smaller than 50% of the allowable flaw size, as defined in IWB-3500, need not be included as detection flaws. For procedures applied from the inside surface, the minimum thickness specified in the scope of the procedure shall be used to calculate a/t. For

procedures applied from the outside surface, the thickness of the test specimen shall be used to calculate a/t.

(f) The number of flaws in a personnel detection demonstration shall be selected from Table IV-1.

(g) For initial qualification detection sets for procedure qualification shall include the equivalent of three personnel qualification sets. Extension of qualifications to qualify new value of essential variables requires at least one personnel qualification set.

(h) The requirements of IWA-3000 shall be used to determine whether closely-spaced flaws are to be treated as separate flaws.

(i) Flaw location and specimen identification shall be obscured to maintain a "blind test."

1.2 Sizing Specimens

(a) Personnel qualification demonstrations shall contain at least 10 flaws, at least 70% of which shall be cracks.

(b) Procedure qualifications shall include the equivalent of three personnel qualification sets.

(c) Sizing specimens shall conform to the requirements of para. 1.1(b), para. 1.1(c), para. 1.1(d), and para. 1.1(e).

2.0 CONDUCT OF PERFORMANCE DEMONSTRATIONS

2.1 Detection Test

(a) Flaw locations shall be obscured to maintain a "blind test." Divulging particular specimen results or candidate viewing of unmasked specimens is prohibited.

(b) If a flaw is reported within the greater of 1.0 in. or 10% of the metal path length to the flaw, from its true location (x, y and z) it shall be considered detected. All other reported flaws shall be considered false calls.

2.2 Length and Depth Sizing Test

(a) Each reported flaw in the detection test shall be length sized.

(b) When only length sizing is being tested, the regions of each specimen containing a flaw to be sized shall be identified to the candidate. The candidate shall determine the length of the flaw in each region.

(c) For the depth sizing test, the regions of each specimen containing a flaw to be sized shall be identified to the candidate. The candidate shall determine the maximum depth of the flaw in each region.

3.0 ACCEPTANCE CRITERIA

3.1 Detection Acceptance Criteria

(a) Procedure qualifications shall demonstrate detectability of each flaw within the scope of the procedure.

(b) Personnel are qualified if the results of the performance demonstration satisfy the acceptance criteria of Table IV-1 and no flaw greater than 0.25 in. depth is missed.

(c) For procedure and personnel demonstrations, the number of false calls shall not exceed A/10, rounded to the next whole number, where A is the total scan area of specimens in the test measured in square feet.

3.2 Sizing Acceptance Criteria

(a) The RMS error of the flaw lengths estimated by ultrasonics, as compared with the true lengths, shall not exceed 0.75 in.

(b) The RMS error of the flaw depths estimated by ultrasonics, as compared with the true depths, shall not exceed 0.15 in.

TABLE IV-1
PERFORMANCE DEMONSTRATION DETECTION TEST ACCEPTANCE CRITERIA

No. of Flaws	Minimum Detection Criteria
7	7
8	8
9	9
10	10
11	11
12	11
13	12
14	13
15	14
16	14
17	15
18	16
19	17
20	18

APPENDIX V-A
QUALIFICATION REQUIREMENTS FOR NOZZLE INSIDE RADIUS SECTION EXAMINATIONS FROM THE INSIDE SURFACE

Examination procedures and personnel are qualified for nozzle inside radius section examination. From the inside radius section examination, from the inside surface, when the following requirements are met. Personnel qualified for detection or depth sizing in accordance with the requirements of Appendix IV, are qualified in accordance with this Appendix, with no additional demonstration, provided the procedure used by the personnel to qualify in accordance with Appendix IV, other than changes required to adapt to the nozzle geometry, is also qualified in accordance with this Appendix.

1.0 SPECIMEN REQUIREMENTS

(a) For PWR vessels, both the inlet and outlet configurations shall be included in the demonstration.

(b) Flaws shall meet the requirements of Appendix IV, except that they shall be oriented as shown in IWB-2500-7. The entire size distribution need not be contained in every specimen, provided one or more examples of the smallest category are included.

(c) The minimum nozzle diameter contained in the scope of the procedure shall be included.

(d) Qualification on clad nozzle mockups may be used for qualification for examination of unclad nozzles. Qualification on unclad nozzle mockups shall not be used for qualification for examination of clad nozzles.

1.1 Detection Specimens

Detection specimens shall conform to the following requirements.

(a) There shall be a minimum of three flaws in each specimen.

(b) The specimen set shall contain a minimum of 10 flaws.

1.2 Sizing Specimens

(a) The sizing test matrix shall contain a minimum of 10 flaws; at least 50% of which shall be cracks.

(b) Any notches included in the test set shall meet the requirements and limitations of Appendix IV, 1.1(e).

2.0 CONDUCT OF PERFORMANCE DEMONSTRATION

2.1 Detection Test

Procedure and equipment qualifications shall be performed as a "blind test."

2.2 Depth Sizing

(a) Depth sizing will be performed without knowledge of the true flaw depths.

(b) The sizing results from each of the specimens shall be combined for grading.

3.0 ACCEPTANCE CRITERIA

(a) Examination procedures and equipment are qualified if each flaw is detected and identified. The number of false calls shall not exceed D/10 rounded up to the next whole number, where D is the nominal nozzle ID in. If only a portion of a nozzle is examined, proportional credit for false calls shall be allowed. The total number of false calls shall not exceed 3.

(b) Personnel not previously qualified to Appendix IV are qualified for detection if the requirements for procedure qualification in (a) above are satisfied.

(c) Examination procedures, equipment, and personnel (not previously qualified to Appendix IV) are qualified for depth sizing if the results of the sizing demonstration meet the sizing acceptance criteria of Appendix IV.

APPENDIX V-B
QUALIFICATION REQUIREMENTS FOR NOZZLE INSIDE RADIUS SECTION EXAMINATIONS FROM THE OUTSIDE SURFACE

1.0 PROCEDURE REQUIREMENTS

The examination procedure shall include or provide for the following:

(a) A computational model that calculates misorientation angles and the maximum metal path distance to the required inspection volume. Misorientation angle is shown in Fig. V-B1. These calculations apply to the central ray of the ultrasonic beam.

(b) A scope statement that specifies the maximum acceptable misorientation angle and metal path for the examinations.

(c) Division of the surface of the required examination volume into grids of 1.0 in. or less in the nozzle axis direction and 10 deg. or less of azimuth.

(d) Documenting the misorientation angle and metal path distance in each grid cell location for each search or scan.

(e) Documenting the search unit or scan that produces the minimum misorientation angle when multiple search units are used.

2.0 SPECIMEN REQUIREMENTS

Demonstration specimens shall meet the requirements of Appendix IV, except as modified by (a) through (e). Flaw depths shall be distributed over the range of depths required by Appendix IV.

(a) One or more full size or sections of full size nozzle mockups shall be used.

(b) Nozzle mockup material and configurations shall be representative of nozzles installed in operating reactor vessels, but may be any thickness, diameter, or radius suitable for demonstration in accordance with para. 3.0.

(c) Flaws shall be uniformly distributed in examination zones A and B of Fig. V-B2. At least half of the flaws shall be located within ±45 deg. of nozzle azimuth angles 90 deg. or 270 deg.

(d) All flaws shall be located in the required inspection volume and shall be oriented in the radial axial plane of the nozzle inside radius as shown in Fig. IWB-2500-7.

(e) For nozzles with bore diameters not more than 4 in. at least 50% of the flaws in the demonstration test set shall be cracks; the balance may be notches. The maximum misorientation shall be demonstrated with cracks.

3.0 CONDUCT OF PERFORMANCE DEMONSTRATIONS

3.1 Procedure Qualification Demonstrations

(a) The qualification shall demonstrate the following:

(1) Examination surfaces to be used, i.e., vessel plate, outer blend radius, and nozzle boss;

(2) Maximum metal path length;

(3) Maximum misorientation angles.

(b) The demonstration shall include at least 10 flaws for detection and sizing, in one or more mockups.

(c) The initial demonstration shall be performed as a "blind test."

(d) After a successful initial demonstration, the scope of the procedure, 1.0(b), may be extended by:

(1) additional demonstrations on additional mockups or

(2) nonblind demonstrations on at least one flaw using scan parameters calculated to provide the desired maximum path length or misorientation angles. Detec-

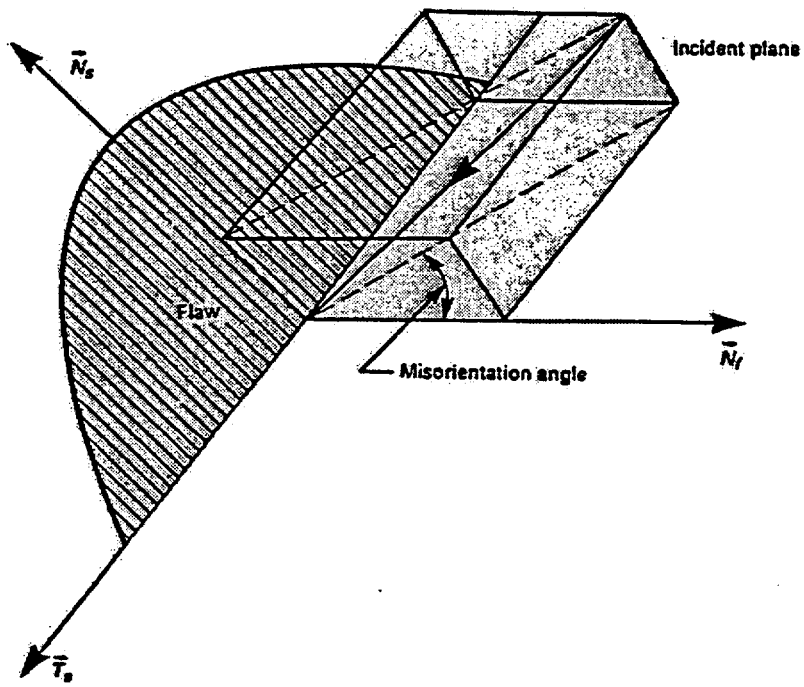

FIG. V-B1 MISORIENTATION ANGLE

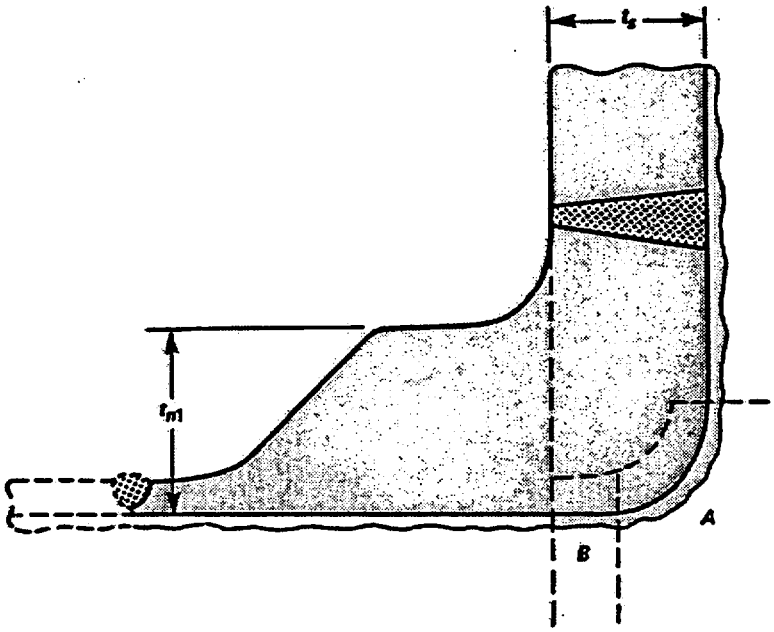

FIG. V-B2 FLAW DISTRIBUTION ZONES

tion shall be demonstrated to specific criteria listed in the examination procedure for any extension of procedure scope.

3.2 Procedure Qualification Documentation. The examination procedure, modeling program and methods, and the qualification results shall be documented to the extent necessary to determine that inservice examinations produce equivalent or smaller misorientation angles than the procedures demonstrated.

3.3 Personnel Qualification

(a) Personnel previously qualified in accordance with the requirements of Appendix IV, for the same type of procedure (manual or automated), from the outside surface, using the same type of instruments and data recording and analysis equipment, shall be qualified as follows:

(1) Successful demonstration shall include at least three additional flaws for each scan surface which is qualified.

(2) Examinations shall be conducted from each of the scan surfaces covered by the procedure.

(3) The candidate shall demonstrate a selection of essential variables covered by the procedure, but need not demonstrate the full range.

(b) Personnel not previously qualified in accordance with the requirements of Appendix 4 shall be qualified as follows:

(1) The candidate shall demonstrate the procedure on one or more mockups.

(2) The demonstration shall contain at least the minimum number of detection and depth sizing flaws specified in Appendix IV.

(3) The demonstration shall include examinations from each of the scan surfaces described in the procedure.

(4) The demonstration need not cover the full range of all the essential variables.

4.0 ACCEPTANCE CRITERIA

4.1 Detection Acceptance Criteria

(a) Examination procedures are qualified if each flaw is detected and identified. The number of false calls shall not exceed D/10, rounded up to the next whole number, where D is the nominal nozzle ID, in. The number of false calls shall not exceed three. If only a portion of a nozzle is examined, proportional credit for false calls is to be allowed. The number of false calls shall not exceed three.

(b) Personnel previously qualified in accordance with the requirements of para. 3.3(a) are qualified, if each of the flaws presented are detected. The number of false calls shall not exceed the number specified in para. 4.1(a).

(c) Personnel not previously qualified in accordance with the requirements of Appendix 4 are qualified, if the results of the demonstration meet the requirements of Table IV-1. The number of false calls shall not exceed the number specified in para. 4.1(a).

4.2 Depth Sizing Acceptance Criteria

(a) Examination procedures are qualified if the results of the sizing demonstration meet the requirements of Appendix IV, para. 3.2.

(b) Personnel previously qualified in accordance with the requirements of para. 3.3(a) are qualified, if the results from the sizing rest, when added to the candidate's results from Appendix IV meet the acceptance criteria of Appendix IV, para. 3.2.

(c) Personnel not previously qualified in accordance with the requirements of Appendix IV are qualified if the results of the demonstration meet the acceptance criteria of Appendix IV, para. 3.2.

5.0 COMPONENT EXAMINATIONS

The computational model shall be used to demonstrate that the proposed examination variables are within the bounds of the qualification demonstration.

(a) Documentation showing coverage and misorientation angle shall be provided for each nozzle examination performed. The documentation shall be used to demonstrate that the component examination will achieve misorientation angles that do not exceed the misorientation angles for which the procedure was qualified.

(b) Modeling need not be applied for repeated examination of nozzles of the same design.

(c) If the misorientation angle or metal path of the component examination exceeds that of the qualification, additional angles and directions may be applied to examine these areas without need for requalification, provided the demonstrated misorientation angle or path length can be achieved.

(d) If para. 5.0(c) cannot be met, the area shall be declared an area of no coverage.

APPENDIX VI
QUALIFICATION REQUIREMENTS FOR REACTOR VESSEL WELDS OTHER THAN CLAD-TO-BASE METAL INTERFACE

1.0 SPECIMEN REQUIREMENTS

Qualification test specimens shall meet the requirements listed herein unless a set of specimens is designed to accommodate specific limitations stated in the scope of the examination procedure. The same specimens may be used to demonstrate both detection and sizing qualification.

1.1 Detection Specimens

(a) Specimens shall have sufficient volume to minimize spurious reflections. The specimen need not contain a weld. Specimen length and width shall be at least 12 in. There shall be at least 10 sq ft of scan surface in the specimen set.

(b) The specimen set shall contain at least one sample that is at least 90% of the maximum thickness to be examined. The specimen set shall contain one or more flaws in each of the locations and size ranges shown in Table VI-1.

(c) When the examination procedure requires the examination to be performed from the vessel I.D. (clad surface), the cladding on the mockup shall be of the same type as the cladding on the component to be examined, with the following exceptions:

(1) demonstration on shielded metal arc weld (SMAW) single-wire cladding is transferable to multiple-wire or strip-clad processes;

(2) demonstration on multiple-wire or strip-clad is considered equivalent but is not transferable to SMAW-type clad.

(d) The surface condition of the test specimens shall be representative of the general condition of the vessel scanning surface.

(e) The detection test matrix shall include flaws with the following description.

(1) Flaw Type. At least 50% of the flaws shall be cracks. The balance of flaws may be cracks, fabrication defects (e.g., lack of fusion and slag inclusions).

(2) Detection and sizing examinations shall include either surface connected flaws or flaws with unflawed ligaments of more than 0.2 in. Procedure demonstrations shall include examples of both.

(3) A weld direction shall be established, whether or not the specimen contains a weld. For procedure qualification, at least 40% of the flaws shall be oriented parallel to the clad direction ±10 deg. and at least 40% shall be oriented perpendicular to the clad direction ±10 deg. For personnel qualification, at least 20% in either direction is sufficient.

(4) Flaws for the detection test matrix shall be selected from the detection test flaws included in Table VI-1. The flaws selected shall provide a demonstration of the minimum and maximum metal path ranges to be demonstrated as well as a uniform distribution of flaw sizes and locations.

(5) The number of flaws in a personnel detection demonstration shall be selected from Table VI-2. Procedure qualifications shall include at least 20 flaws uniformly distributed over the ranges defined in Table VI-1.

(6) The requirements of IWA-3000 shall be used to determine whether closely-spaced flaws are to be treated as separate flaws.

1.2 Sizing Specimens

(a) Qualification demonstrations shall contain at least 10 flaws for personnel and 20 for procedures at least 55% of which shall be cracks. The remainder may be

manufacturing defects, such as slag, lack of fusion, or combinations thereof.

(b) Sizing specimens shall conform with the requirements of para. 1.1(b), para. 1.1(c), para. 1.1(d), and para. 1.1(e), except that the test matrix shall be selected from the sizing and detection test flaws included in Table VI-1.

2.0 CONDUCT OF PERFORMANCE DEMONSTRATIONS

2.1 Detection Test

(a) Flaw locations shall be obscured to maintain a "blind test." Divulging particular specimen results or candidate viewing of unmasked specimens is prohibited.

(b) If a flaw is reported within the greater of 1.0 in. or 10% of the metal path length to the flaw, from its true location (x, y, and z), it shall be considered detected. All other reported flaws shall be considered false calls.

2.2 Length and Depth Sizing Test

(a) Each reported flaw shall be length sized.

(b) For the length sizing test, the regions of each specimen containing a flaw to be sized shall be identified to the candidate. The candidate shall determine the length of the flaw in each region.

(c) When only depth sizing is being tested, the regions of each specimen containing a flaw to be sized shall be identified to the candidate. The candidate shall determine the maximum depth of the flaw in each region.

3.0 ACCEPTANCE CRITERIA

3.1 Detection Acceptance Criteria

(a) Procedure qualifications shall demonstrate detectability of each flaw within the scope of the procedure.

(b) Personnel are qualified if the results of the performance demonstration satisfy the acceptance criteria of Table VI-2 and no surface connected flaw greater than 0.25 in. depth or imbedded flaw (distance from nearest surface exceeds 10%T) greater than 0.5 in. was missed.

(c) For procedures and personnel demonstrations, the number of false calls shall not exceed A/10, rounded to the next whole number, where A is the total scan area of specimens in the test measured in square feet.

3.2 Sizing Acceptance Criteria

(a) The RMS error of the flaw lengths estimated by ultrasonics, as compared with the true lengths, shall not exceed 0.75 in.

(b) The RMS error of the flaw depths estimated by ultrasonics, as compared with the true depths, shall not exceed 0.25 in.

(c) The slope of the linear regression line shall be at least 0.7. The slope of the linear regression line is calculated as shown in Fig. VI-1.

TABLE VI-1
DETECTION AND SIZING TEST FLAWS AND LOCATIONS

Flaw Location	Flaw Through-Wall Dimension, in. [Notes (2), (3), and (4)]				
	0.075–0.200	0.201–0.350	0.351–0.550	0.551–0.750	0.751–2.00
Inner 10% [Note (1)]	X	X	S	S	...
Outer 10%	X	X	S	S	...
11–30% *T*	...	...	X	X	S
31–60% *T*	...	...	X	X	S
61–89% *T*	...	...	X	X	S

NOTE:
(1) Does not apply to clad vessels (see Appendix IV).
(2) Flaws smaller than 50% of allowable flaw size specified in IWB-3500 need not be included as detection flaws without regard for their designation as S or X.
(3) Flaws equal to or less than the allowable flaw size may be used as detection flaws without regard to their position in the Table.
(4) The thickness of the test specimen shall be used to determine the a/t ratios in IWB-3500.

LEGEND:
X Applies to detection and sizing flaws.
S Applies only to sizing flaws.
T Thickness of the test specimen which contains the flaw.

TABLE VI-2
PERFORMANCE DEMONSTRATION DETECTION TEST ACCEPTANCE CRITERIA

No. of Flaws	Minimum Detection Criteria
7	7
8	8
9	9
10	10
11	11
12	11
13	12
14	13
15	14
16	14
17	15
18	16
19	17
20	18

LINE A. Linear regression line, $y = a + bx$, giving the best fit of n data points $(x_1, y_1), \ldots (x_n, y_n)$ obtained by the least-square method where,

$$a = y \text{ intercept} = \frac{\Sigma y_i}{N} - b\,\frac{\Sigma x_i}{N}$$

b = slope of the regression line

$$= \frac{N\Sigma x_i y_i - (\Sigma x_i)(\Sigma y_i)}{N\Sigma x_i^2 - (\Sigma x_i)^2}$$

n = number of data points

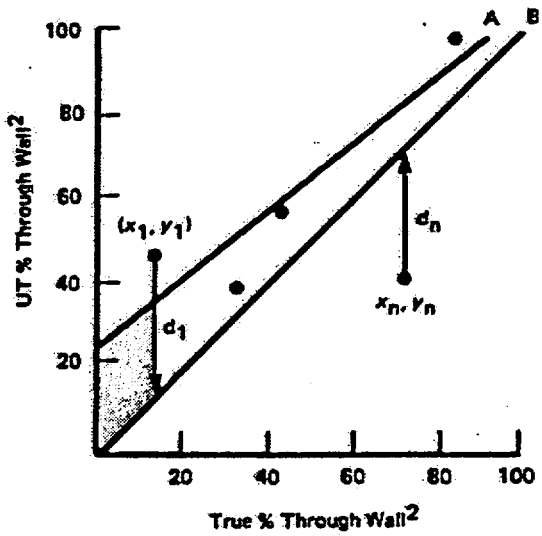

LINE B: Ideal line, $y = x$ (perfect UT measurements).

CORRELATION COEFFICIENT: Correlation coefficient, defined as

$$r = \frac{n\Sigma x_i y_i - (\Sigma x_i)(\Sigma y_i)}{\sqrt{[n\Sigma x_i^2 - (\Sigma x_i)^2]\,[n\Sigma y_i^2 - (\Sigma y_i)^2]}}$$

is a measure of "how well" the least-square regression line fits the data with respect to the ideal of $y = x$.

MEAN DEVIATION: Mean deviation is an indicator of accuracy of the measurements defined as

$$\text{Mean Deviation} = \frac{|d_1| + |d_2| + \ldots |d_n|}{n}$$

NOTES:
(1) *Standard Mathematical Tables*, 25th ed., William H. Beyer, Ph. D., Ed., CRC Press, Inc., Boca Raton, FL, 1979.
(2) Percent through-wall units apply to Supplements 2 and 3. Flaw depth units apply to Supplements 4 through 7.

FIG. VI-1 DEFINITION OF STATISTICAL PARAMETERS

APPENDIX VII
QUALIFICATION REQUIREMENTS FOR NOZZLE-TO-VESSEL WELD EXAMINATIONS CONDUCTED FROM THE BORE

Successful demonstration in accordance with Appendix IV and VI qualifies procedures and personnel for nozzle-to-vessel weld examinations when the following requirements are met.

(a) The demonstration shall contain at least four flaws in one or more full-scale nozzle mockups. The specimens shall comply with Appendix VI, para. 1.1, except that, flaw locations and orientations shall be selected from Table VII-1. At least one flaw from each category shall be included. At least 75% of the flaws shall be cracks or fabrication flaws. The balance may be notches. At least one flaw parallel to the weld shall provide a metal path distance with 10% of the equivalent path length to the weld centerline of the thickest component to be examined.

(b) For detection, the requirements of Appendix VI, para. 2.1 apply. Each flaw shall be detected with no false calls.

(c) For length sizing, the sizing result shall be added to the results of Appendices IV and VI. The combined results shall meet the acceptance standards of Appendix VI, para. 3.2.

(d) For depth sizing, the flaw depths shall be distributed over the ranges of Appendix IV, para. 1.1 for the inner 15% of the wall thickness, and Appendix VI, para. 1.1 for the remaining wall thickness. For the inner 15%, the depth sizing results shall be combined with the sizing results from Appendix IV. For the remaining wall thickness, the depth sizing results shall be combined with the sizing results from Appendix VI. The combined results shall meet the depth sizing acceptance criteria of Appendix IV, para. 3.2 and Appendix VI, para. 3.2, respectively.

TABLE VII-1
FLAW LOCATIONS AND ORIENTATIONS

	Parallel to Weld	Perpendicular to Weld
Inner 15%	X	X
OD Surface	X	...
Subsurface	X	...

APPENDIX VIII
QUALIFICATION REQUIREMENTS FOR BOLTS AND STUDS

1.0 SPECIMEN REQUIREMENTS

Qualification test specimens shall meet the requirements listed herein, unless a set of specimens is designed to accommodate specific limitations stated in the scope of the examination procedure.

1.1 Specimens shall conform to the following requirements.

(a) The qualification process shall be performed with a full-scale section bolt or stud that is sufficient to contain the beam path and demonstrate the scanning technique.

(b) The qualification specimen shall be of similar chemical composition, tensile properties, and metallurgical structure as the bolt or stud to be examined. The scan surface of the qualification specimen shall have a configuration similar to the bolt or stud to be examined.

(c) Circumferentially oriented notches shall be located in the procedure qualification specimens at the minimum and maximum qualified metal paths. Notches located within one diameter of the end of the bolt or stud opposite the search unit are suitable for demonstrating the maximum metal path distance. Personnel qualification specimens may have notches at any location within the inspection volume. These notches are required on the outside threaded surface and the inner bore hole surface of bored studs with maximum depths and reflective areas as specified in Table VIII-1.

(d) Additional notches may be located within the range specified in (c) above, provided they do not interfere with the detection of other notches.

2.0 CONDUCT OF PERFORMANCE DEMONSTRATIONS

Specimen identification and notch locations shall be obscured to maintain a "blind test." A flaw shall be considered detected when the notch, as defined in para. 1.1, is found. The reported notch axial location shall be within the greater of $\pm\frac{1}{2}$ in. or $\pm 5\%$ of the bolt or stud length, of the true location.

3.0 ACCEPTANCE CRITERIA

3.1 Examination procedures and personnel are qualified for detection when each qualification notch (as described in para. 1.1) has been detected and its response equals or exceeds the reporting criteria specified in the procedure. The notch response shall have a minimum peak signal to peak noise ratio of 2:1.

TABLE VIII-1
MAXIMUM NOTCH DIMENSIONS

Bolt or Stud Size Diameter	Depth, in. [Note (1)]	Reflective Area, sq. in.
Greater than 4 in.	0.157	0.059
2 in. to 4 in.	0.107	0.027

NOTE:
(1) For threaded surfaces, depth is measured from the bottom of the thread root to bottom of notch.

APPENDIX XIII
REQUIREMENTS FOR COORDINATED IMPLEMENTATION OF SELECTED ASPECTS OF APPENDICES IV AND VI

1.0 GENERAL

Candidates meeting the requirements of this Appendix in its entirety are considered qualified to Appendices IV and VI. Detecting and sizing may be performed separately.

2.0 COMBINED APPENDIX IV AND APPENDIX VI QUALIFICATION

Personnel qualification for Appendices IV and VI may be combined as follows:

(a) For detection, the total number of Appendices IV and VI flaws shall be at least 10 of which at least 50% shall be Appendix IV flaws.

(b) For sizing, the total number of Appendices IV and VI flaws shall be at least 10, of which at least 50% shall be Appendix IV flaws. At least 50% of the flaws in any sizing shall be cracks.

3.0 ACCEPTANCE CRITERIA

(a) Examination personnel are qualified for detection and length sizing when the results of any combined performance demonstration satisfy the acceptance of Appendix IV.

(b) Examination personnel are qualified for depth sizing when Appendix IV and VI flaws are sized within the respective acceptance criteria of those Appendices.

This Page Intentionally Left Blank

Indian Point 3
3rd Inservice Inspection Interval
RELIEF REQUEST NUMBER 3-21 (I), Rev. 0, 06/14/00
(Page 1 of 2)

A. COMPONENT IDENTIFICATION

Code Class:	1
References:	Table IWB-2500-1, Figure IWB-2500-8
Examination Category:	B-J
Item Number:	B9.11
Description:	Reactor Coolant Pipe Circumferential Welds

B. CODE REQUIREMENT

Table IWB-2500-1, Category B-J, requires surface and volumetric examination of the Code required area per IWB-2500-8.

C. RELIEF REQUESTED

Pursuant to 10CFR50.55a(g)(5)(iii), relief is requested from performance of the surface examination on the basis that the implementation of Code requirements is impractical.

D. BASIS FOR RELIEF

The Reactor Vessel cavity and RPV support system were designed and fabricated to Codes in effect during the late 1960s. The Codes used did not provide for full access for inservice inspection. The only access to the first Reactor Coolant Pipe Circumferential Weld off the Hot-leg and Cold-leg at the Reactor Vessel from the outside surfaces is through removable plugs in the primary shield. These plugs are located above the Reactor Coolant Pipe Circumferential weld and are removable through the refueling cavity floor. With the plugs removed, the top insulated surfaces (approximately 25% of the area) of the Circumferential welds are visible. However the fixed insulation, designed as non-removable, and the limited space between the Reactor Coolant Pipe and cavity wall and expected high radiation levels preclude surface examination.

E. PROPOSED ALTERNATE EXAMINATION

The Reactor Coolant Pipe Circumferential welds will be volumetrically examined at the end of the inspection interval from the inside diameter with the automated reactor vessel inspection tool. The alternative proposed provides for a 100% volumetric examination from the I.D. using the automated reactor vessel tool in conjunction with performance of the Reactor Vessel 10-Year ISI examination. The examination techniques are the same as those employed during the second interval and are adequate to detect a significant flaw. The automated reactor vessel inspection tool and the associated procedure have been demonstrated to be capable of detecting OD surface-connected defects from the ID. The test block used has defects which were cracks and not machined notches.

F. JUSTIFICATION FOR RELIEF

Since the examination techniques employed in the proposed alternate examination will be capable of detecting any deleterious flaws, granting of this relief will not decrease the overall level of plant quality and safety.

G. PERIOD FOR WHICH RELIEF IS REQUESTED

Relief is requested for the third inspection interval, July 21, 2000 thru July 20, 2009.

H. ATTACHMENTS TO RELIEF

None

RELIEF REQUEST NUMBER 3-22, Rev. 0, 06/14/00
(Page 1 of 2)

A. COMPONENT IDENTIFICATION

Code Class:	2
References:	IWA-2500, Table IWC-25OO-1
Examination Category:	C-A
Item Number:	C1.30
Description:	Inspection of Regenerative Heat Exchanger Tubesheet-to-Shell Weld

B. CODE REQUIREMENT

Table IWC-2500-1, Category C-A, requires a volumetric examination be performed on the Regenerative Heat Exchanger tubesheet-to-shell weld.

C. SPECIFIC CODE REQUIREMENT FROM WHICH RELIEF IS REQUESTED

Table IWC-2500-1, Item No. C1.30 - Examination of 100% of weld length

D. BASIS FOR RELIEF

Pursuant to 10 CFR 50.55a(g)(5)(iii), relief is requested on the basis that compliance with the code requirement is impractical.

The regenerative heat exchanger was designed and fabricated to codes in effect during the late 1960's. These codes did not require that there be full access for inservice inspection, as was required by later codes. The component was designed before inspection, ample access and weld configuration conducive for examination were required.

The UT scan paths for the examination of the tubesheet-to-shell weld is limited by the proximity of the nozzle weld. During the First and Second 10-Year Intervals, the required 90% coverage was not attainable and relief was applied and granted for the 1st Interval, and relief for the 2nd Interval will be submitted as part of the Second Interval Close-out.

RELIEF REQUEST NUMBER 3-22, Rev. 0
(Page 2 of 2)

E. PROPOSED ALTERNATE EXAMINATION

The tubesheet-to-shell weld will be UT examined to the extent possible. The estimated examination coverage is provided below based on coverage attained during the 2nd Interval examination:

92% examined – for 45°
93% examined – for 60° L
73% (based metal 5 side) examined - 0°

In addition, all component parts and welds associated with the regenerative heat exchanger will be visually examined during hydrostatic testing *as* required by IWC-2500, Category C-H, and in accordance with Code Case N-498-1.

F. PERIOD FOR WHICH RELIEF IS REQUESTED

Relief is requested for the third inspection interval, July 21, 2000 thru July 20, 2009.

G. JUSTIFICATION FOR THE RELIEF

The history of reliable operation by this and similar components at other plants combined with the described UT examination and visual examinations (VT-2) during pressure testing will provide adequate assurance that an acceptable level of quality and safety is maintained.

H. ATTACHMENT TO THE RELIEF

None

This Page Intentionally Left Blank

RELIEF REQUEST NUMBER 3-23 (I), Rev. 0, 06/14/00
(Page 1 of 2)

A. COMPONENT IDENTIFICATION

Code Class:	2
References:	IWC-2500-1
Examination Category:	C-B
Item Number:	C2.22
Description:	Replacement Steam Generator Main Steam Nozzle Inside Radius Sections

B. CODE REQUIREMENT

Volumetric examination of 1 Main Steam Nozzle Inside Radius Section per IWC-2500-4(a) or (b)

C. RELIEF REQUESTED

Pursuant to 10 CFR 50.55a(a)(3)(i), relief is requested on the basis that the proposed alternative would provide an acceptable level of quality and safety.

D BASIS FOR RELIEF

The Main Steam Nozzle is welded to the Replacement Steam Generator. Section XI requires volumetric examination of the inside radius section of nozzles greater than a nominal pipe size of 12 inches in Class 2 vessels. In the case of Indian Point Unit 3 Replacement Steam Generators, due to design, the Main Steam Nozzles do not have an inner or blended radius section to examine. The nozzle is a one piece forging with seven holes bored parallel to the nozzle centerline. Inconel flow restrictors are subsequently installed within each of these holes and attached to cladding that is weld deposited onto the bottom surface of the nozzle. The cladding serves as a medium of attachment for the inconel flow restrictors and as an erosion barrier to protect the nozzle forging. Due to the Main Steam Nozzle not having an inner radius blended section to examine, the Section XI requirements are not applicable. The I.D. of the Steam Outlet Nozzle is not accessible for visual examination due to interference from the installed steam separator packages on the inside and the internal geometry of the nozzle itself precludes access for visual examination from the outside.

RELIEF REQUEST NUMBER 3-23 (I), Rev. 0
(Page 2 of 2)

Examination perform on the Replacement Steam Generators to ASME Section III on the steam outlet nozzle include the following: 100% Ultrasonic inspection of the nozzle forging prior to final machining followed by magnetic particle and visual inspection after final machining. Examinations performed on the weld deposited cladding in the area beneath the bored hole corners include ultrasonic (for bond and defect), liquid penetrant and visual examination. Upon attachment of the flow restrictors the welds were liquid penetrant and visually examined.

E. PROPOSED ALTERNATE EXAMINATION

Visual, VT-2 examination will be performed during system pressure test as required by IWC-2500-1, Item C7.10 and C7.20 and in accordance with Code Case N-498-1.

F. JUSTIFICATION FOR RELIEF

The proposed alternative would provide an acceptable level of quality and safety as allowed by 10CFR50.50a(a)(3)(i) and the justification provided in Section D of this Relief Request.

G. PERIOD FOR WHICH RELIEF IS REQUESTED

Relief is requested for the third inspection interval, July 21, 2000 thru July, 20, 2009.

H. ATTACHMENTS TO THIS RELIEF

None

Indian Point #3
First Containment Inservice Inspection Interval
Relief Request No. 3-24 (C), Rev. 0, 06-14-00

A. ARTICLE IDENTIFICATION:

1992 Section XI, Subsection IWE
Class: MC
System: Containment System

B. EXAMINATION REQUIREMENTS:

1992 Edition, 1992 Addenda of Subsection IWE, "Requirements for Class MC and Metallic Liners of Class CC Components of Light-Water Cooler Plants" of Section XI of the ASME Code

C. RELIEF REQUESTED:

Relief is requested from the requirements of the 1992 Edition, including 1992 Addenda of the ASME Section XI, Subsection IWE. Pursuant to 10CFR50.55a(a)(3)(i) relief is requested on the basis that the proposed alternative would provide an acceptable level of quality and safety.

D. BASIS FOR RELIEF:

IP3's 3rd 10-Year Interval for Inservice Inspection (ISI) of Class 1, 2, 3 components commence on July 21, 2000. This ISI Program is developed based on the requirements of the 1989 Edition of the ASME Section XI Code. Current 10CRF50.55a requirement on using the 1992 Edition with the 1992 Addenda of Subsection IWE requirements would impose difficulties in the coordination of training, certification and qualification requirements of the 3rd 10-Year Interval ISI program to the Containment ISI examinations. Development and implementation of a meaningful containment ISI program would be facilitated by adopting the examination requirements detailed below. These alternative examinations provide for consistency with the anticipated ISI program for Class 1,2, 3 components in the qualification of nondestructive examination personnel as well as providing more practical requirements for the examination of containment bolting, and for seals and gaskets.

Some specific hardships imposed by the 1992 Edition, '92 Addenda of IWE that are not compensated for by an increased level of plant quality and safety are as follows:

- The 1992 Edition, 1992 Addenda of IWA-2300 requires the use of a written practice prepared in accordance with ANSI/ASNT CP-189 for the qualification and certification of containment nondestructive examination personnel. All other IP3 NDE and ISI activities, including those performed on the reactor vessel, will be performed by personnel qualified and certified to written practices prepared in accordance with the 1984 Edition of SNT-TC-1A as required by ASME XI 1989 Edition, No Addenda, which will be the Code of record for the 3rd 10-Year Interval for the Class 1, 2, & 3 components at IP3 which will be effective July 21, 2000. Utilizing the '92 Edition of IWA-2300 would require the development of a separate written practice based on CP-189 requirements and the issuance and tracking of separate certifications for both NYPA and contractor personnel. Administration of the resulting dual programs could result in documentation inconsistencies and would have an impact to our finite resources.

- Containment bolting requires a VT-1 examination and a bolt torque or bolt tension test per Table IWE-2500-1. Determination of bolt torque or tension requires the performance of a maintenance activity to un-torque or un-tension the bolt and then to re-torque or re-tension the bolt. Bolted joints are currently subject to Appendix J leak testing and a visual examination to verify leak tightness and structural integrity. Other bolted joints subjected to visual examination by ASME XI, including Code Class 1 bolting, do not require bolt torque or bolt tension testing. Performance of these maintenance activities would also have an impact on resources, increases radiation exposure and may result in damage to permanent plant equipment which would necessitate repair or replacement.

- Seals and gaskets require specific VT-3 examinations per Table IWE-2500-1. Seals and gaskets are not part of the containment pressure boundary. Bolted joints and airlocks are currently subject to Appendix J leak testing and visual examinations to verify leak tight integrity. The performance of additional VT-3 examinations of seals and gaskets to detect conditions that may violate leak tight integrity is redundant, increases radiation exposure and would be an impact to resources.

The proposed alternative is to utilize the 1998 edition, Subsection IWE of the ASME Section XI in conjunction with the 1989 Edition of Subsections IWA-2200 and IWA2300 on examination methods and qualifications of NDE Examination Personnel. Utilizing the entire 1998 IWE Subsection incorporates other exceptions to the '92 addenda stated in NRC rulemaking and provide more cohesiveness than could only be achieved by requesting relief on several individual subjects separately. The proposed alternate examination requirements were developed in accordance with the ASME Code committee process with input from interested parties, which included various utilities, manufacturers, engineering organizations, Authorized Nuclear Inspection Agencies, EPRI and the NRC. The updating of requirements by this consensus process is intended to ensure the continued safe operation of nuclear power plants and specifically in this case the continued leak-tight and structural integrity of metallic containment components. Therefore, the overall level of plant quality and safety will not be adversely affected by utilizing the requirements of the 1998 Edition, Subsection IWE of the ASME Section XI and the 1989 Edition of Subsection IWA-2300.

In accordance with the requirements of 10CFR50.55a and the NRC rulemaking, IP3 had initially developed the Containment Repair/Replacement program to the requirements of the 1992 Edition, 1992 Addenda of the Subsection IWE of the ASME Section XI code. Two relief requests were previously submitted (Reference 1 and 2) and approved by the NRC: to use the existing 2nd 10-Year Interval Class 1, 2, 3 ISI Program requirements (currently based on 1983, Summer 1983 Addenda) on training and certification; and to perform Appendix J, type B tests in lieu of the VT-3 examination of seals and gaskets. Furthermore, based on current plant refueling outage schedules and the requirement of the rulemaking for full implementation by September 9, 2001, a Containment ISI examination program have also been established based on the 1992 Code requirements. Since IP3 is submitting for the NRC's review and approval its 3rd 10-Year ISI Program Plan which is based on the 1989 edition of the Section XI code, implementing this relief request now would reduce the overall impact to resources (both NYPA's and the NRC's) versus other approaches such as incorporating the mandated edition and addenda of IWE in conjunction with this initial establishment of a containment ISI program and then updating again to a later edition and or addenda or to a series of Code Cases upon formal NRC endorsement or on the next ten year ISI plan issuance.

This relief request proposes to substitute the requirements of the 1998 Edition of ASME Section XI with the exceptions noted below for Class MC components. The Authority believes that this alternative is acceptable pursuant to 10 CFR 50.55a(a)(3)(i) as it would provide an acceptable level of quality and safety.

The NRC issued an SER for the Comanche Peak plants (Reference 1) which granted relief to substitute the requirements of Subsections IWE/IWL of the 1998 Edition of the ASME Code for Class MC & CC components with several exceptions. These exceptions and the IP3 information pertaining to these exceptions are discussed below:

I. IWE-2300

The 1992 Edition and Addenda (Table 2500-1) invokes the use of IWA-2200 and IWA-2300 for visual, surface, and volumetric examination methods, and for qualification of personnel. In contrast, the 1998 Edition of IWE-2300 requires the owner to define requirements for visual examination of containment surfaces, and for qualifying the personnel performing visual examinations. In addition, the 1998 Edition of IWE-2320 requires the owner to designate a responsible individual who will be responsible for activities related to the containment surface visual examinations and personnel qualification. To address these differences, the following provisions will be incorporated into IP3's Containment Inservice inspection program/procedures:

- General Visual Examination criteria are developed from VT-3 procedures that are used to examine ASME Class 1, 2, and 3 components: Pressure retaining bolting recording criteria is developed from the VT-1 procedures used for Class 1 bolting.

- Moisture barriers are examined for tears, cracks, or damage that permits moisture to intrude.

- Detailed Visual Examination criteria are developed from VT-1 and VT-3 procedures.

- The containment visual examination procedure qualification requirement for lighting and illumination are similar to, and developed from, the procedures used for VT-1 and VT-3 examinations of ASME Class 1, 2, and 3 components for the 3rd 10-Year Interval, in accordance with ASME Section XI 1989 edition, and SNT-TC-1A, 1984 edition.

- In applications where remote visual examination systems are to be used, those systems will be demonstrated to have a resolution capability at least equivalent to that attainable by direct visual examination.

- Containment visual examination procedures will be demonstrated to the Authorized Nuclear Inservice Inspector for capability to detect flaws and degradation levels defined with the procedure, and

- The containment visual examination program is developed from the guidelines of SNT-TC-1A, 1984 edition and ANSI N45.2.6. Certified personnel will have demonstrated skill, demonstrated knowledge, documented training, and documented experience required to properly perform the duties of a specific job.

II. IWE-2500

The 1998 Edition of IWE-2500 removes the requirement to examine paint or coatings prior to removal. To ensure that the recoating would not be applied to a degraded containment surface, the following information is provided.

- The IP3 ISI, Containment ISI, Repair/Replacement, and Containment Coatings Programs are all administered by engineering personnel dedicated and experienced in Inservice Inspection of Section XI Components and activities. These program responsible engineers are cognizant of each other's area of responsibility. In addition to this organizational and physical proximity, procedure provisions are in place to require notification, review and/or approval by the appropriate responsible engineers on both maintenance and Section XI activities related to the Containment pressure boundary. In areas important to containment integrity, coatings program procedural requirements ensure that coating deficiencies identified on the containment liner are brought to the attention of the Subsection IWE Responsible Individual (Containment ISI Engineer). This is accomplished through the review and approval of the associated work package and a physical inspection by the Coating engineer if deem necessary during the review process. Prior to final disposition of the coating deficiency by the Coatings Program Engineer, the Containment ISI Engineer has the opportunity to establish visual examination hold points for any point in the coating removal and reapplication process. These procedural ties ensure that base metal conditions that could challenge the structural integrity of the containment are examined by properly qualified personnel.

III. IWE 3510.1 and IWE 3511.1

The owner is required to define the acceptance criteria for visual examination of containment surfaces in performing Category E-A and Category E-C examinations. The basic requirements for these examinations are provided in IWE-2310 and are augmented by IP3 as described in the discussion of IWE-2300 above. These requirements ensure that significant flaws and degradations will be identified during Category E-A and Category E-C examinations.

IV. IWE-3511.3

The 1998 Edition of IWE-3511.3 provides acceptance criteria for ultrasonic examination. In the 1992 Edition and Addenda of the Code, these criteria are provided in IWE-3512.3. In the 1998 Edition of the Code, these criteria are applicable to Class MC pressure retaining components only. It is not applicable to metallic liners of Class CC components. IP3 will use the criteria for ultrasonic examination of the containment liners as well.

E. ALTERNATIVE EXAMINATIONS:

Applicable containment examinations will be performed in accordance with Subsection IWE of the 1998 Edition of the ASME Code, rather than to the 1992 Edition, 1992 Addenda, as currently required by 10 CFR 50.55a, including the specific exceptions/discussion described in Section D, as applicable to articles IWE-2300, IWE-2500, and Subarticles IWE-3510.1, IWE-3511.1, and IWE-3511.3. Examination methods and qualification of NDE personnel will be to the requirements of the1989 Edition of Section XI, Subsections IWA-2200 and IWA-2300, and SNT-TC-1A, 1984 Edition.

F. JUSTIFICATION FOR RELIEF:

In accordance with the provisions of 10CFR50.55a(a)(3)(i), the proposed alternative requirements will provide an acceptable level of quality and safety. In addition, a similar relief request was approved for the Comanche Peak Nuclear Power Plant (refer to NRC letter, Reference 3, dated 07/23/99). The proposed alternative of using the 1998 Section XI Code for the required IWE/IWL examinations and evaluations, and including the specific exceptions, provides an acceptable level of quality and safety.

G. IMPLEMENTATION SCHEDULE:

This relief request, if approved, will be implemented during the 1st 10-Year Containment Inservice Inspection (ISI) Interval for IP3, from September 9, 1998 through September 8, 2008.

H. Reference:

1. NRC letter, S. Bajwa to J. Knubel, "Relief Request from ASME Section XI Code Requirements for Class MC and metallic liners of Class CC components for IP3 (TAC no. MA6199, dated September 13, 1999).

2. NRC letter, S. Bajwa to J. Knubel, "Relief Request from ASME Section XI for JAFNPP and IP3 (TAC nos. MA5346 and MA5399", dated June 28, 1999.

3. NRC letter, R. Gramm to C. Terry, "Comanche Peak Steam Electric Station (CPSES), Units 1 and 2 – Evaluation of Relief Requests: Use of 1998 Edition of Subsections IWE and IWL of the ASME Code for Containment Inspection (TAC nos. MA2038 and MA2039", dated July 23, 1999.

This Page Intentionally Left Blank

Indian Point #3
First Containment Inservice Inspection Interval
Relief Request No. 3-25 (C), Rev. 0, 06/15/00

A. ARTICLE IDENTIFICATION:

1992 Section XI, Subsection IWL
Class: CC
System: Containment System

B. EXAMINATION REQUIREMENTS:

1992 Edition, 1992 Addenda of Subsection IWL, "Requirements for Class CC Concrete Components of Light-Water Cooler Plants" of Section XI of the ASME Code

C. RELIEF REQUESTED:

Relief is requested from the requirements of the 1992 Edition, including 1992 Addenda of the ASME Section XI, Subsection IWL. Pursuant to 10CFR50.55a(a)(3)(i) relief is requested on the basis that the proposed alternative would provide an acceptable level of quality and safety.

D. BASIS FOR RELIEF:

IP3's 3rd 10-Year Interval for Inservice Inspection (ISI) of Class 1, 2, 3 components commence on July 21, 2000. This ISI Program is developed based on the requirements of the 1989 Edition of the ASME Section XI Code. Current 10CRF50.55a requirement on using the 1992 Edition with the 1992 Addenda of Subsection IWL requirements would impose difficulties in coordination of the training, certification and qualification requirements of the 3rd 10-Year Interval ISI program to the Containment ISI examinations. Development and implementation of a meaningful containment ISI program would be facilitated by adopting the examination requirements detailed below. These alternative examinations provide for consistency with the 3rd 10-Year ISI program requirements for Class 1,2, 3 components in the definition of visual examination methods and in the qualification of visual examination personnel as well as providing more practical requirements for the performance and scheduling of examination.

Some specific hardships imposed by the 1992 Edition, '92 Addenda of IWL that are not compensated for by an increased level of plant quality and safety are as follows:

The 1992 Edition of Subsection IWA-2300 requires the use of a written practice prepared in accordance with ANSI/ASNT CP-189 for the qualification and certification of containment nondestructive examination personnel. All other IP3 NDE and ISI activities, including those performed on the reactor vessel, will be performed by personnel qualified and certified to written practices prepared in accordance with SNT-TC-1A as required by ASME XI 1989 Edition, No Addenda, which is the code of the Code of record for the 3rd 10-Year Interval for the Class 1, 2, & 3 components at IP3. Utilizing the '92 Edition and Addenda of the Subsection IWL would require the development of a separate written practice and the issuance and tracking of separate certifications for both NYPA and contractor personnel. Administration of the resulting dual programs could result in documentation inconsistencies and would have an impact to resources.

The 1992 Edition and Addenda, Subsections IWL-2310 and IWA-2210 require specific minimum illumination and maximum direct examination distances for concrete containment examinations. These requirements preclude the performance of remote examination. Performance of the more stringent IWA-2210 direct examinations are not practical for much of the IP3 Concrete Containment surface area; would be an impact to resources and would introduce a significant risk to personnel safety.

The proposed alternative is to utilize the 1998 edition, Subsection IWL of the ASME Section XI, in conjunction with the 1989 edition of Section XI, Subsections IWA-2200 and IWA-2300 on examination methods and qualification of nondestructive examination personnel. Utilizing the 1998 Subsection IWL incorporates other exceptions to the '92 addenda as required by the NRC rulemaking and provide more cohesiveness than could only be achieved by requesting relief on several individual subjects separately. The proposed alternate examination requirements were developed in accordance with the ASME Code committee process with input from interested parties which included various utilities, manufacturers, engineering organizations, Authorized Nuclear Inspection Agencies, EPRI and the NRC. The updating of requirements by this consensus process is intended to ensure the continued safe operation of nuclear power plants and specifically in this case the continued leak-tight and structural integrity of metallic containment components. Therefore, the overall level of plant quality and safety will not be adversely affected by utilizing the requirements of the 1998 Edition, Subsection IWL of the ASME Section XI. In accordance with the requirements of 10CFR50.55a and the NRC rulemaking, IP3 had initially developed the Containment Repair/Replacement program to the requirements of the 1992 Edition, 1992 Addenda of the Subsection IWL of the ASME Section XI code. However, a relief request was previously submitted (Reference 1) and approved by the NRC to use the existing 2nd 10-Year ISI Interval Class 1, 2, 3 ISI Program requirements (currently based on 1983 Edition and summer 1983 Addenda) on training and certification requirements. Based on

current plant refueling outage schedules and the requirement of the new rulemaking for full implementation by September 9, 2001, a containment ISI examination program had been established initially based on the 1992 Code requirements. Since IP3 is submitting for the NRC's review and approval its 3rd 10-Year ISI Program Plan which is based on the 1989 edition of the Section XI code, Implementing this relief request now would reduce the overall impact to resources (both NYPA's and the NRC's) versus other approaches such as incorporating the mandated edition and addenda of IWL in conjunction with this initial establishment of a containment ISI program and then updating again to a later edition and or addenda or to a series of Code Cases upon formal NRC endorsement or on the next ten year ISI plan issuance.

This relief request proposes to substitute the requirements of the 1998 Edition of ASME Section XI, Subsection IWL with the exceptions noted below for Class CC components. The Authority believes that this alternative is acceptable pursuant to 10 CFR 50.55a(a)(3)(i) as it would provide an acceptable level of quality and safety. The NRC issued an SER for the Comanche Peak plants (Reference 1) which granted relief to substitute the requirements of Subsections IWE/IWL of the 1998 Edition of the ASME Code for Class MC & CC components with several exceptions. These exceptions and the IP3 information pertaining to these exceptions are discussed below:

I. IWL-2310

The 1998 Edition removed the definitions of VT-1C and VT-3C and replaced with the terms "detailed visual examination" and "general visual examination" respectively. Containment visual examinations will be performed in accordance with procedures written specifically for the Containment ISI Program. That is, the examination attributes are containment specific as are the containment examiner qualification requirements which are based on containment specific experience, training and examination. However, the containment visual examination procedure qualification requirements for lighting and resolution are similar to, and developed from, the procedures used for VT-1 and VT-3 examinations of ASME Code Class 1, 2 and 3 components. As such containment visual examination procedures will be demonstrated to the ANII for capability to detect the flaws and degradation levels defined within the procedures. In applications where remote visual examination systems are to be used those systems will be demonstrated to have a resolution capability at least equivalent to that attainable by direct visual examination. The procedure qualification used for Subsection IWL remote visual examination will be the same type as the Subsection IWE remote visual examinations.

II. Table IWL-2500-1

Under Item L.1.12, Suspect Areas, a "detailed visual" examination will be performed instead of the "general visual" examination as stated in the 1998 edition, which NYPA acknowledged is an inadvertent change from the 1992 edition requirements.

E. ALTERNATIVE EXAMINATIONS:

Applicable containment examinations will be performed in accordance with Subsection IWE of the 1998 Edition of the ASME Code, rather than to the 1992 Edition, 1992 Addenda, as currently required by 10 CFR 50.55a., including the specific exceptions/discussion described in Section D, as applicable to articles IWL-2310 and Table IWL-2500-1. Examination methods and qualification of nondestructive examination personnel will be to the requirements of 1989 Edition of Section XI, Subsection IWA-2300; and SNT-TC-1A, 1984 Edition.

F. JUSTIFICATION FOR RELIEF:

In accordance with the provisions of 10CFR50.55a(a)(3)(i), the proposed alternative requirements will provide an acceptable level of quality and safety. In addition, a similar relief request was approved for the Comanche Nuclear Power Plant (refer to NRC letter, Reference 2, dated 07/23/99). The proposed alternative of using the 1998 Section XI Code for the required IWE/IWL examinations and evaluations, and including the specific exceptions, provides an acceptable level of quality and safety.

G. IMPLEMENTATION SCHEDULE:

This relief request, if approved, will be implemented during the 1st 10-Year Containment Inservice Inspection (ISI) Interval for IP3, from September 9, 1998 through September 8, 2008.

H. Reference:

1. NRC letter, S. Bajwa to J. Knubel, "Relief Request from ASME Section XI Code Requirements for Class MC and metallic liners of Class CC components for IP3 (TAC no. MA6199, dated September 13, 1999).

2. NRC letter, R. Gramm to C. Terry, "Comanche Peak Steam Electric Station (CPSES), Units 1 and 2 – Evaluation of Relief Requests: Use of 1998 Edition of Subsections IWE and IWL of the ASME Code for Containment Inspection (TAC nos. MA2038 and MA2039", dated July 23, 1999.

This Page Intentionally Left Blank

Indian Point 3
Third Inservice Inspection Interval
Relief Request No. 3-26 (I), Rev. 1, 07-11-00

A. ARTICLE IDENTIFICATION:

Class: All
Identification of System: All

B. CODE REQUIREMENTS:

Article IWA-4000, IWA-4400 and IWA-7000 welding and brazing procedure qualification requirements.

All welding shall be performed in accordance with Welding Procedures Specifications that has been qualified by the Owner or repair organization in accordance with the requirements of the codes specified in the Repair Program in accordance with IWA-4120.

C. RELIEF REQUESTED:

Pursuant to 10CFR50.55a(a)(3)(i) relief is requested on the basis that the proposed alternative would provide an acceptable level of quality and safety. Relief is requested from the requirements of ASME Section XI, Article IWA-4000, IWA-4400 and IWA-7000.

D. BASIS FOR RELIEF:

The basis for this relief is to implement ASME Code Case N-573, which eliminates the redundancy currently required by the Code for each organization to independently qualify all welding procedures even though they have met the qualification process at another facility. ASME XI Code Case N-573 recognizes and addresses this fact and proposes an alternative, which maintains an acceptable level of quality and safety.

E. ALTERNATIVE EXAMINATIONS OR TESTS:

The following alternative testing requirements will be implemented as defined by ASME Section XI Code Case N-573, Transfer of Procedure Qualification Records between Owners, Section XI, Division 1.

1. NYPA will perform a technical review of the supplying Owner's PQR

2. The supplying Owner will state in writing that the PQR was performed under an acceptable Nuclear Quality Assurance program that meets ASME Section XI, IWA-1400 and that it was performed in accordance with ASME Section IX.

3. NYPA will generate a NYPA WPS using the variables established in the supplied PQR(s). NYPA PQR's may supplement these or other Owner supplied PQR's.

4. The WPS will be approved and signed by NYPA.

5. The WPS will be demonstrated successfully by NYPA by completing a welder performance qualification test using the parameters of the NYPA WPS.

6. NYPA will not transfer the supplied PQR to any other Owner.

7. NYPA will document the use of this Code Case on the appropriate NIS-2/2A form.

F. JUSTIFICATION FOR REQUESTING RELIEF:

The proposed alternative would provide an acceptable level of quality and safety as allowed by 10CFR50.55(a)(3)(ii) and the justification provided in Section E of this relief request.

G. IMPLEMENTATION SCHEDULE:

The Alternate Testing requirements of ASME Code Case N-573 will be incorporated into the IP3 Inservice Inspection Program for the 3rd Ten-Year Interval, July 21, 2000 thru July 20, 2009.

H. ATTACHMENTS TO THE RELIEF:

ASME Code Case N-573, Transfer of Procedure Qualification Records Between Owners, Section XI, Division 1 Pressure Test of Containment Penetration Piping, Section XI, Division 1.

I. USNRC RESPONSE

Submitted

Approval Date: March 12, 1997

See Numeric Index for expiration and any reaffirmation dates.

Case N-573
Transfer of Procedure Qualification Records Between Owners
Section XI, Division 1

Inquiry: What alternatives to the welding and brazing procedure qualification requirements of IWA-4000 may be used?

Reply: It is the opinion of the Committee that as an alternative to the welding and brazing procedure qualification requirements of IWA-4000, a procedure qualification record (PQR) qualified by one Owner may be used by another Owner. When this alternative is used, the following requirements shall be met:

(a) The Owner that performed the procedure qualification test shall certify, by signing the PQR, that testing was performed in accordance with Section IX.

(b) The Owner that performed the procedure qualification test shall certify, in writing, that the procedure qualification was conducted in accordance with a Quality Assurance Program that satisfies the requirements of IWA-1400.

(c) The Owner accepting the completed PQR shall accept responsibility for obtaining any additional supporting information needed for WPS development.

(d) The Owner accepting the completed PQR shall document, on each resulting WPS, the parameters applicable to welding. Each WPS shall be supported by all necessary PQR's.

(e) The Owner accepting the completed PQR shall accept responsibility for the PQR. Acceptance shall be documented by the Owner's approval of each WPS that references the PQR.

(f) The Owner accepting the completed PQR shall demonstrate technical competence in application of the received PQR by completing a performance qualification test using the parameters of a resulting WPS.

(g) The Owner may accept and use a PQR only when it is received directly from the Owner that certified the PQR.

(h) Use of this Case shall be shown on the NIS-2 form documenting welding or brazing.

This Page Intentionally Left Blank

Indian Point 3
Third Inservice Inspection Interval
Relief Request No. 3-27 (S), Rev. 1, 07/14/00

A. ARTICLE IDENTIFICATION:

IWF-5000

Class:	1, 2 and 3
Identification of Components:	Snubbers
Systems:	All

B. EXAMINATION REQUIREMENTS:

The ASME B&PV Code, Section XI, Article IWF-5000 1989 Edition invokes the snubber examination requirements of Standard OM Part 4 1987 through OMa-1988 Addenda (published in 1988), Section 2.3.2.2 which states that "examinations shall be conducted at 18-month intervals" and specifies schedule changes if unacceptable snubbers are revealed. All references to OM Part 4 are to this year and addenda. Section 2.3.2.3 of Standard OM requires that subsequent examinations for any given failure group not be lengthened more than one increment at a time.

C. RELIEF REQUESTED:

Pursuant to the provision specified in 10CFR50a(g)(5)(iii) relief is requested from the performance of visual inspections of snubbers at 18-month intervals, and the associated schedule changes if unacceptable snubbers are revealed, as required by IWF-5000 which invokes Standard OM Part 4, Section 2.3.2.2. Relief from the "Subsequent Examination Schedule Adjustment" of Part 4, Section 2.3.2.3 is also requested. Pursuant to 10CFR50.55a(a)(3)(i) relief is requested on the basis that the proposed alternatives discussed in this request for relief would provide an acceptable level of quality and safety. Specifically, the proposed alternative of using NRC Generic Letter 90-09 provides an acceptable level of quality and safety.

D. BASIS FOR RELIEF:

The 18-month snubber visual inspection schedule as it appears in OM Standard, Part 4, Section 2.3.2.2 assumes that refueling intervals will not exceed 18 months, and is based only on the number of unacceptable snubbers found during the previous visual inspection, irrespective of the size of the snubber population. The 18-month inspection interval is incompatible with current operating cycle lengths of 24 months. Due to the number of snubbers in use at the Indian Point 3 plant, the OM Part 4 schedule and snubber selection

method is excessively restrictive and resource intensive. Performance of these inspections during power operation, as would be necessary under the OM Part 4 18-month inspection interval, would result in expenditures of significant resources and would subject plant personnel to unnecessary radiological exposure with no commensurate increase in quality or safety. As concluded by the NRC staff in Generic Letter 90-09, the proposed alternative inspection maintains the same confidence level in snubber operability. The proposed alternative is compatible with the current 24-month operating cycle and generally will allow inspections to be performed during plant outages, thereby reducing radiological exposure of plant personnel.

Relief from Section 2.3.2.3, "Subsequent Examination Schedule Adjustment" is also requested since the schedule adjustment specified in this Section of the standard is based on the examination intervals of Section 2.3.2.2. of OM Standard Part 4.

The proposed alternative inspection conforms with NRC Generic Letter 90-09 and has been previously approved for use at the Indian Point Nuclear Power Plant by the NRC as License Amendment 111 to the Indian Point Operating License on March 9, 1992.

The revised ISI Snubber Program which relocates examination and testing requirements for snubbers to plant controlled documents was included in the submittal for the Improved Technical Specification Project (reference IPN-98-134, dated December 11, 1998). This relief request will be incorporated into our ISI Program and the Plant Controlled Document. Functional testing shall be in accordance with the OM standard and the Plant Controlled Document.

E. ALTERNATIVE EXAMINATIONS OR TESTS:

Visual examination (VT-3) of snubbers will be performed at intervals and sampling rates in accordance with the requirements specified in Generic Letter 90-09, "Alternative Requirements for Snubber Inspection Intervals and Corrective Actions", December 11, 1990. This proposed alternative is based upon the number of unacceptable snubbers found during the previous inspection, the total population or category size for each snubber type, and the previous interval. Specifically, the visual inspection interval will be determined based upon the criteria contained in IP-3 Technical Specifications Section 4.11.A which was approved by the NRC as License Amendment 111 to the Indian Point Operating License on March 9, 1992.

The standard 25% extension on surveillance intervals is applicable to any examination interval determined in accordance with this alternative.

A similar relief request was approved for NYPA's FitzPatrick plant. Refer to NRC Safety Evaluation (SE) and Technical Letter Report, dated October 14, 1998, NRC to NYPA, JAFNPP. - Third Interval Inservice Inspection Program Relief Request (TAC No. MA0711)

F. JUSTIFICATION FOR RELIEF:

In accordance with the provisions of 10CFR50.55a(a)(3)(i), the proposed alternative requirements will provide an acceptable level of quality and safety. The requirements of NRC Generic Letter 90-09 provide an alternative requirement that provides an acceptable level of quality and safety. The proposed alternative has been previously approved for use by the NRC as License Amendment 111 to the Indian Point Operating License on March 9, 1992. Additionally, the proposed alternative qualification requirements are identical to those previously approved for NYPA's James A. FitzPatrick Nuclear Power Plant.

G. IMPLEMENTATION SCHEDULE:

The proposed alternative inspection was implemented in 1992 as a result of Amendment 111 to the Indian Point 3 Operating License on March 09, 1992 and will be continued in the third 10-year inspection interval.

H. ATTACHMENTS TO THE RELIEF:

None

I. USNRC RESPONSE

Submitted