Bryce L. Shriver
Vice President – Nuclear Site Operations

Susquehanna Steam Electric Station
P.O. Box 467, Berwick, PA 18603
Tel. 570.542.3120 Fax 570.542.1477
blshriver@papl.com

ppl™

JUL 26 2000

U.S. Nuclear Regulatory Commission
Attn: Document Control Desk
Mail Station P1-137
Washington, DC 20555

SUSQUEHANNA STEAM ELECTRIC STATION
LICENSEE EVENT REPORT 50-387/99-006-01
PLA - 5211 FILE R41-2

Docket No. 50-387
License No. NPF-14

Attached is Licensee Event Report 50-387/99-006-01. The original report was made pursuant to 10CFR50.73(a)(2)(i), in that Susquehanna S.E.S. Unit 1 and Unit 2 were in a condition prohibited by the Technical Specifications, when it was discovered that 2 of 4 Emergency Service Water Pumps were inoperable for greater than 7 days. This supplement is being provided to revise the corrective actions that have been completed and those to be taken.

Bryce L. Shriver
Vice President – Nuclear Site Operations

Attachment

cc: Mr. H. J. Miller
Regional Administrator
U. S. Nuclear Regulatory Commission
475 Allendale Road
King of Prussia, PA 19406

Mr. S. L. Hansell
Sr. Resident Inspector
U.S. Nuclear Regulatory Commission
P. O. Box 35
Berwick, PA 18603-0035

IE22

NRC FORM 366 (6-1998) U.S. NUCLEAR REGULATORY COMMISSION

LICENSEE EVENT REPORT (LER)

(See reverse for required number of digits/characters for each block)

APPROVED BY OMB NO. 3150-0104
EXPIRES 06/30/2001
ESTIMATED BURDEN PER RESPONSE TO COMPLY WITH THIS MANDATORY INFORMATION COLLECTION REQUEST: 50.0 HRS. REPORTED LESSONS LEARNED ARE INCORPORATED INTO THE LICENSING PROCESS AND FED BACK TO INDUSTRY. FORWARD COMMENTS REGARDING BURDEN ESTIMATE TO THE INFORMATION AND RECORDS MANAGEMENT BRANCH (T-6 F33), U.S. NUCLEAR REGULATORY COMMISSION, WASHINGTON, DC 20555-0001, AND TO THE PAPERWORK REDUCTION PROJECT (3150-0104), OFFICE OF MANAGEMENT AND BUDGET, WASHINGTON, DC 20503.

FACILITY NAME (1)	DOCKET NUMBER (2)	PAGE (3)
Susquehanna Steam Electric Station - Unit 1	05000387	1 OF 7

TITLE (4)
'C' And 'D' ESW Pumps Inoperable Greater Than 7 Days Due To Interaction With 'A' And 'B' Pumps

EVENT DATE (5)			LER NUMBER (6)			REPORT DATE (7)			OTHER FACILITIES INVOLVED (8)	
MONTH	DAY	YEAR	YEAR	SEQUENTIAL NUMBER	REVISION NUMBER	MONTH	DAY	YEAR	FACILITY NAME	DOCKET NUMBER
									Susquehanna SES Unit 2	05000388
09	22	99	99	-- 006 --	01	07	26	00	FACILITY NAME	DOCKET NUMBER 05000

OPERATING MODE (9)	1	THIS REPORT IS SUBMITTED PURSUANT TO THE REQUIREMENTS OF 10 CFR §: (Check one or more) (11)							
			20.2201(b)		20.2203(a)(2)(v)	X	50.73(a)(2)(i)		50.73(a)(2)(viii)
POWER LEVEL (10)	100		20.2203(a)(1)		20.2203(a)(3)(i)		50.73(a)(2)(ii)		50.73(a)(2)(x)
			20.2203(a)(2)(i)		20.2203(a)(3)(ii)		50.73(a)(2)(iii)		73.71
			20.2203(a)(2)(ii)		20.2203(a)(4)		50.73(a)(2)(iv)		OTHER
			20.2203(a)(2)(iii)		50.36(c)(1)		50.73(a)(2)(v)		Specify in Abstract below or in NRC Form 366A
			20.2203(a)(2)(iv)		50.36(c)(2)		50.73(a)(2)(vii)		

LICENSEE CONTACT FOR THIS LER (12)

NAME	TELEPHONE NUMBER (Include Area Code)
Joseph J. Meter - Senior Engineer, Licensing	570 / 542-1873

COMPLETE ONE LINE FOR EACH COMPONENT FAILURE DESCRIBED IN THIS REPORT (13)

CAUSE	SYSTEM	COMPONENT	MANUFACTURER	REPORTABLE TO EPIX	CAUSE	SYSTEM	COMPONENT	MANUFACTURER	REPORTABLE TO EPIX

SUPPLEMENTAL REPORT EXPECTED (14)			EXPECTED SUBMISSION DATE (15)	MONTH	DAY	YEAR
	YES (If yes, complete EXPECTED SUBMISSION DATE).	X NO				

ABSTRACT (Limit to 1400 spaces, i.e., approximately 15 single-spaced typewritten lines) (16)

At 2230 hours on September 22, 1999, with Unit 1 and Unit 2 in Mode 1 (Power Operation) at 100% power, Engineering personnel determined that 'C' and 'D' Emergency Service Water Pumps could not be assured of achieving minimum flow requirements and the pumps were declared inoperable. The 'A' and 'B' ESW pumps were creating sufficient backpressure on the 'C' and 'D' pumps to prevent their discharge check valves from opening while all four pumps were running. Subsequent reviews of the ESW system showed that the condition had existed since June 3, 1999 for the 'C' pump and since July 30, 1999 for both pumps. This represented an operation prohibited by Technical Specification Limiting Condition for Operation 3.7.2. The causes for this event were: PP&L does not have a program to assess ESW system for pump interaction; the design of the ESW system does not ensure that ESW pumps achieve the minimum required flow; the ESW system resistance to flow has increased; and an operability determination generated by Engineering personnel for the ESW system dated 9/1/99 was incorrect due to human error. A procedure change was added to the ESW system flow path alignment to ensure the 'C' and 'D' pumps are capable of providing the required minimum flow while operating simultaneously with the other pumps. Both the 'C' and 'D' ESW pumps were returned to operable status at 0530 hours on September 25, 1999. One ESW pump per loop remained capable of performing its design basis function throughout the times the condition existed and there were no actual safety consequences as a result of this event. Other corrective actions include overhauling the 'C' and 'D' pumps, monitoring and trending ESW system resistance, and assessing ESW system design to identify any warranted hardware changes.

EVENT DESCRIPTION

At 2230 hours on September 22, 1999, with Unit 1 and Unit 2 in Mode 1 (Power Operation) at 100% power, Engineering personnel (Utility; non-licensed) determined that 'C' and 'D' Emergency Service Water (ESW) Pumps (EIIS Code: BI) could not be assured of achieving minimum flow requirements. The pumps were declared inoperable. The condition existed because the 'A' and 'B' ESW pumps were creating sufficient backpressure on the 'C' and 'D' pumps to prevent their discharge check valves from opening when all pumps were running simultaneously. This condition was discovered by Engineering personnel during a review of an event in which flow in the 'B' Loop of ESW decreased when the 'D' Diesel Generator (EIIS Code: EK) was in operation. Subsequent reviews of the ESW system then showed that the condition for the 'C' pump had existed since June 3, 1999 and the condition for the 'C' and 'D' ESW pumps had existed since July 30, 1999. This represented an operation prohibited by Technical Specification Limiting Condition for Operation 3.7.2 (L.C.O. 3.7.2). L.C.O. 3.7.2 contains provisions that both Unit 1 and Unit 2 may operate for a maximum of 7 days while either one ESW pump is inoperable or while one ESW pump in each loop is inoperable. Otherwise both Units must be shutdown. A procedure change was added to the ESW system flow path alignment to ensure the 'C' and 'D' pumps were capable of achieving the required minimum flow while operating simultaneously with the other pumps. Both the 'C' and 'D' ESW pumps were returned to operable status at 0530 hours on September 25, 1999.

Background

The ESW system is designed to take water from the spray pond, pump it to various heat exchangers and return the water to the spray pond by way of a network of sprays that dissipate the heat to the atmosphere. The system consists of two loops with two pumps per loop. The system is designed to supply 100 percent of the ESW cooling flow to the required heat exchangers in both Units and to the common Diesel Generators during design basis accidents. See Figure 1.

On June 3, 1999 the 'A' ESW pump was overhauled and on July 30, 1999 the 'B' ESW pump was overhauled. This action improved the performance of these pumps. At 1942 hours on August 26, 1999, while performing a dynamic test on ESW system valves, all four ESW pumps were run simultaneously to support the testing. Operations personnel (Utility; non-licensed) noted that the 'C' and 'D' ESW pumps' discharge check valves were closed or nearly closed while all four pumps were in operation. The 'C' and 'D' pumps were operating with little or no flow. Since operation of these pumps without the required minimum flow could result in pump damage, the ESW pumps were shutdown and the dynamic valve test was terminated.

To better understand the condition of the 'C' and 'D' pumps, a quarterly flow In-Service Test (IST) was performed on August 27, 1999 to assess the performance of the individual pumps. The purpose of the IST is to trend a pump's individual performance by monitoring discharge pressure while operating within a predetermined flow range. Each ESW pump was tested at a flow range of 5500 gpm to 5700 gpm while the system is aligned for normal power operations. System alignment for normal power operations included the following loads for each ESW loop respectively (See Figure 1):

- 2 Reactor Core Isolation Cooling (RCIC, EIIS Code: BN) Pump Room Coolers
- 2 High Pressure Core Injection (HPCI, EIIS Code: BJ) Pump Room Coolers

- 4 Core Spray (EIIS Code: BM) Pump Room Coolers (2 per Unit)
- 4 Residual Heat Removal (RHR, EIIS Code: BO) Pump Room Coolers (2 per Unit)
- 4 Residual Heat Removal (RHR, EIIS Code: BO) Pump Motor Oil Coolers (2 per Unit)
- 4 Diesel Generator (D/G, EIIS Code: LA) Lube Oil Coolers common to both ESW Loops (1 per aligned D/G)
- 4 Diesel Generator (D/G, EIIS Code: LB) Jacket Water Coolers common to both ESW Loops (1 per aligned D/G)
- 8 Diesel Generator (D/G, EIIS Code: LB) Intercoolers common to both ESW Loops (2 per aligned D/G)

The 'D' ESW pump IST was performed at 0039 hours on August 27, 1999. The 'D' ESW pump could not produce the required IST flows of 5500 gpm to 5700 gpm while the 'B' Loop of ESW was aligned for normal power operations. It appeared that system resistance to flow had increased slightly. Since all four ESW pumps start during a design basis accident and the 'D' ESW pump discharge check valve was observed closed while all four pumps were operating and it could not achieve IST conditions, the 'D' ESW pump was declared inoperable at 0100 hours on August 27, 1999. The 'C' ESW pump was then tested. It could not produce the required IST flows and was declared inoperable for the same reasons as the 'D' ESW pump at 0600 hours on August 27, 1999. The ESW system valve alignment was checked and no valves were found out of position. The ESW flow instrumentation was checked for proper operation and found to be acceptable. In order to normalize test conditions for the 'C' and 'D' pumps, an additional parallel flowpath (the 'E' D/G) was opened to reduce the overall system resistance, and the IST was re-performed for each pump. The 'C' and 'D' pumps produced the required discharge pressure while within the required flow range in this alignment. Based on the results of this testing, Engineering personnel concluded that the 'C' and 'D' ESW pumps were performing satisfactorily when operated without any other pumps operating. Based on additional troubleshooting efforts and normal operating history, Engineering personnel knew that operating any combination of two pumps simultaneously did not create a deadhead condition. For example, operating the 'A' and 'C' pumps simultaneously without operating the 'B' and 'D' pumps would not cause the 'C' pump to be deadheaded. The deadhead condition was observed for the 'C' and 'D' pumps only when all four pumps were operated simultaneously. Parts required to overhaul the 'C' and 'D' ESW pumps were not available, therefore, minor maintenance was performed on the 'C' and 'D' ESW pumps in an attempt to improve the pump's performance. The minor maintenance of the pumps was unsuccessful in changing the 'C' and 'D' pump's ability to provide the required minimum flow while all four pumps operated simultaneously.

Since the 'C' and 'D' discharge check valves were observed to be at or near closed while the system was aligned for normal power operations and not all safety system ESW loads were in service, the pumps were operating slightly below the flow rate that would be anticipated following design basis accidents. That is, the system provides more resistance to flow while aligned for normal power operations than it would for design basis accidents. Engineering personnel developed an ESW system test to simulate ESW system flow conditions during design basis accidents by aligning those safety system ESW loads that would be aligned for design basis accidents. This test was performed on August 31, 1999 and demonstrated that each

individual pump achieved required minimum flow with all four ESW pumps running simultaneously. Based on the results of the IST and the design basis accident flow test, on September 1, 1999, Engineering personnel prepared an operability determination to state that the 'C' and 'D' ESW pumps were operable. At 1515 hours on September 1, 1999 the 'C' and 'D' ESW pumps were declared operable.

On September 20, 1999, during operation of the 'D' Diesel Generator (D/G, EIIS Code: EK) for a routine test, Control Room personnel (Utility; Licensed) received a 'B' Loop ESW Low Flow Alarm. The 'B' Loop ESW flow decreased when the 'D' D/G was started and returned to normal when the 'D' D/G was shutdown. This prompted questions concerning the adequacy of the previous operability determination prepared on September 1, 1999. That operability determination was based on the assumption that the ESW temperature control valves to each D/G intercooler would be full open, or nearly full open during design basis accidents. Engineering personnel had considered the ESW system alignment required for a Loss of Coolant Accident (LOCA) accompanied by a Loss of Offsite Power (LOOP) and this was assumed to be the most limiting case for the ESW system. However, a LOCA without a LOOP was not considered. For this scenario, the diesel generators would be lightly loaded, requiring little ESW cooling flow to the intercoolers. The temperature control valves to the intercoolers would be closed or nearly closed as was the case when the 'D' D/G was run on September 20, 1999. Based on this information, Engineering personnel could not assure that all four ESW pumps would achieve minimum required flows during a LOCA with all pumps running. At 2230 hours on September 22, 1999 the 'C' and 'D' ESW pumps were again declared inoperable. A procedure change was implemented to place all D/G intercooler temperature control valves in the open position. This procedure change ensured that the temperature control valves remained open for all design basis accidents. Engineering personnel determined that the 'C' and 'D' ESW pumps would produce the required minimum flow with all four ESW pumps running simultaneously. Engineering personnel then revised the operability determination and both the 'C' and 'D' ESW pumps were returned to operable status at 0530 hours on September 25, 1999.

CAUSE OF EVENT

There were multiple causes associated with this event. The first cause was determined to be that PP&L does not have a program to assess the ESW system for pump interaction. Contributing to the lack of an ESW pump interaction program was that Nuclear Department personnel did not identify potential problems in the ESW system during a review of NRC Bulletin 88-04 in October 1988. Bulletin 88-04 addressed the potential for deadheading pumps in safety related systems that have a minimum flow line common to one or more pumps. The ESW system was not considered in that evaluation since it does not have minimum flow lines for the pumps.

The second cause was that the design of the ESW system does not ensure that ESW pumps achieve the minimum required flow. The original design of the system did not include a minimum flow line for the ESW pumps even though the ESW system is designed to operate the pumps at moderate flows which increases the likelihood of pump interaction.

A third cause was an increase in ESW system resistance which caused a gradual reduction in pump flow. This increase in system resistance has been evaluated and is believed to be distributed throughout the system as opposed to being associated with an individual ESW load.

Lastly, the operability determination generated by Engineering personnel for the ESW system dated 9/1/99, was incorrect due to human error. The preparer and technical reviewer of the operability determination did not consider all accident scenarios.

REPORTABILITY/ANALYSIS

This event was determined to be reportable per 10CFR50.73 (a)(2)(i) in that Susquehanna S.E.S Unit 1 and Unit 2 were in a condition prohibited by Technical Specifications, when it was discovered that 2 of 4 Emergency Service Water (ESW) (EIIS: BI) Pumps were inoperable greater than 7 days.

There were no actual safety consequences as a result of this event. There were no plant transients, reactor shutdowns, changes to reactivity or loss of the system's ability to cool station equipment when needed. The safety significance of this event is low. An Engineering risk analysis was performed for this condition. That analysis determined that the risk increase was insignificant. One ESW pump per loop remained capable of performing its design basis function throughout the times the condition existed. The ESW system is designed such that a pump in each loop provides adequate cooling to all safety related loads. The 'C' and 'D' pumps could have failed if the 'A' and 'B' pumps caused them to become deadheaded. In this case, the 'A' and 'B' pumps would have been able to provide adequate cooling water flow. If either the 'A' or 'B' pump were assumed to fail at the onset of a design basis accident, the 'C' or 'D' pump would no longer have been at dead-head conditions and would have been able to provide adequate cooling water flow.

In accordance with the guidance provided in NUREG 1022, Rev. 1, Item 5.1.1, the required submission date for this report was determined to be October 22, 1999.

CORRECTIVE ACTIONS

Corrective actions that have been completed:

- A procedure change was implemented to place all D/G intercooler temperature control valves in the open position. This procedure change ensures that the temperature control valves remain open for all design basis accidents. This in-turn ensures that the 'C' and 'D' ESW pumps will produce the required minimum flow with all four ESW pumps running simultaneously.
- Administrative controls were implemented to ensure that removal of any ESW cooling load was evaluated for impacts on the operability of the 'C' and 'D' ESW pumps until these pumps were overhauled.
- The 'C' and 'D' ESW pumps were overhauled.
- ESW flows were monitored on a weekly basis to detect any changes in system resistance prior to overhauling the 'C' and 'D' ESW pumps. No significant changes in system resistance were noted prior to rebuilding the 'C' and 'D' ESW pumps.

- A program to periodically measure ESW system resistance was established. This program trends data, oversees resistance control efforts, and sponsors needed cleaning.

- This event was reviewed with a human performance expert to identify areas where human performance was a contributor. Lessons learned from the review were presented to the applicable Engineering staff.

- NRC Bulletin 88-04 was reevaluated for plant systems using the knowledge gained from this event. No additional concerns were identified.

Corrective action to be completed:

- The original LER action to establish an ESW pump trend program to prevent adverse pump interaction was assessed and determined to be an impractical solution. Instead an assessment of the ESW system design will be conducted to identify the hardware changes that are necessary to prevent adverse pump interaction. Based on the results of the assessment, the appropriate system configuration changes will be made.

ADDITIONAL INFORMATION

Failed Component Identification: None

Previous Similar Events: None

FACILITY NAME (1)	DOCKET	LER NUMBER (6)			PAGE (3)
		YEAR	SEQUENTIAL NUMBER	REVISION NUMBER	
Susquehanna Steam Electric Station - Unit 1	05000 387	99	-- 006 --	01	7 OF 7

TEXT *(If more space is required, use additional copies of NRC Form 366A)* (17)

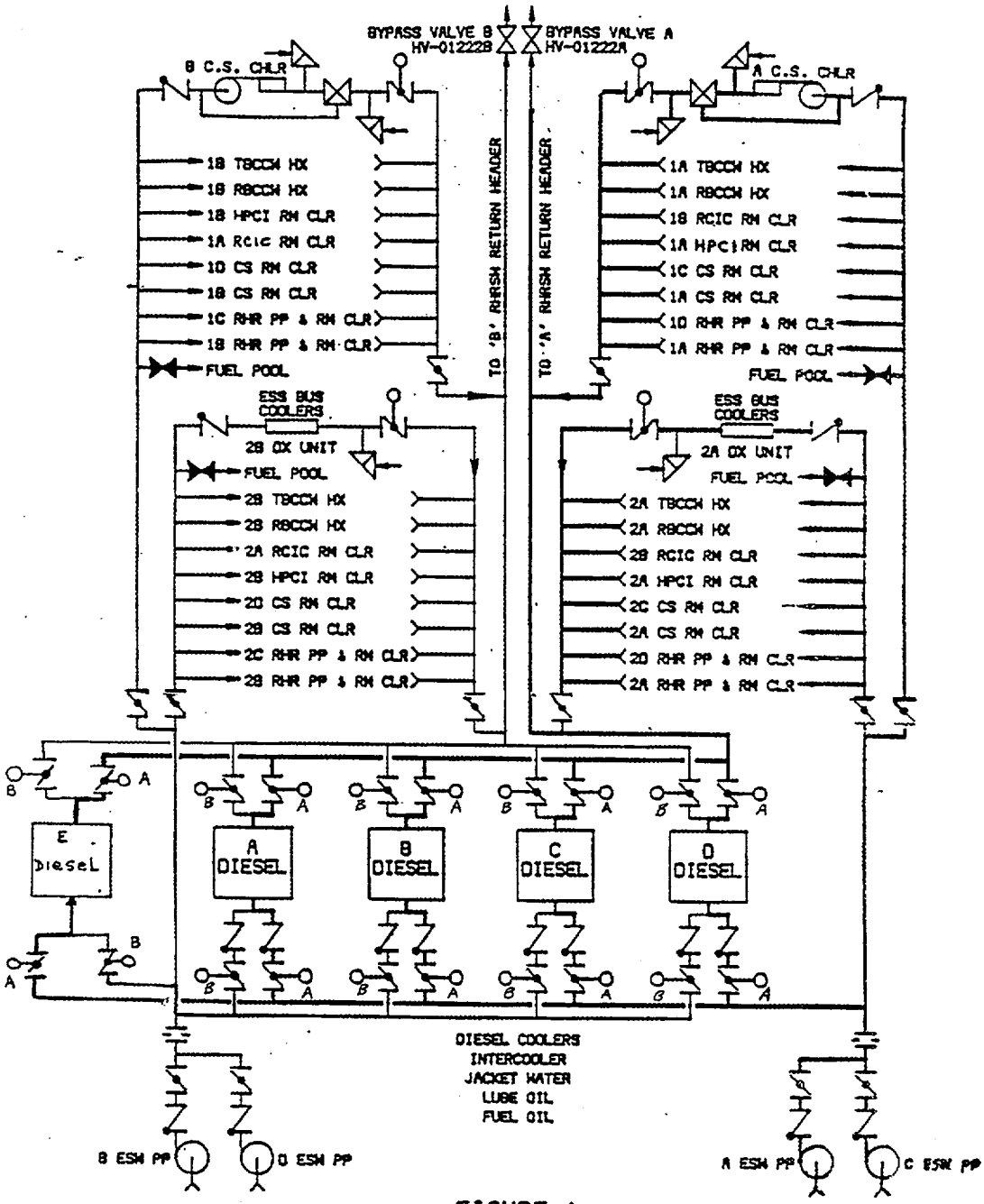

FIGURE 1
EMERGENCY SERVICE WATER