Commonwealth Edison Company
LaSalle Generating Station
2601 North 21st Road
Marseilles, IL 61341-9757
Tel 815-357-6761

ComEd

July 21, 2000

United States Nuclear Regulatory Commission
Attention: Document Control Desk
Washington, D.C. 20555

LaSalle County Station, Units 1 and 2
Facility Operating License Nos. NPF-11 and NPF-18
NRC Docket Nos. 50-373 and 50-374

Subject: Response to Request for Additional Information
NRC Inspection Report 50-373/99020, 50-374/99020

References:

(1) Letter from J. L. Caldwell (U.S. NRC) to O. D. Kingsley (ComEd), "Reply to Non-Cited Violation for NRC Inspection Report 50-373/99020; 50-374/99020," dated February 8, 2000.

(2) Letter from C. G. Pardee (ComEd) to U.S. NRC, "Response to Request for Additional Information NRC Inspection Report 50-373/99020," dated March 10, 2000.

(3) Letter from C. G. Pardee (ComEd) to U.S. NRC, "Response to Request for Additional Information NRC Inspection Report 50-373/99020," dated March 20, 2000.

(4) Letter from Donna M. Skay (USNRC) to Oliver D. Kingsley (ComEd), "LaSalle County Station, Units 1 and 2 – Pipe Support Calculations," dated April 18, 2000.

The Reference 1 letter from the NRC requested information from Commonwealth Edison (ComEd) Company related to issues with respect to design of pipe supports at the LaSalle County Station. This information was requested to support a meeting to discuss technical issues related to use of hinged connections in the design of pipe supports employing concrete expansion anchors. References 2 and 3 were submitted to address the NRC request for information. The NRC provided an additional information

A001

request with information to be addressed in a public meeting in Reference 4. The information requested was that ComEd model two supports using an integrated finite element analysis program; provide a validation of rotational stiffness values obtained using the Sargent and Lundy APLAN program with a public domain computer code; to provide information related to use of operating basis earthquake and safe shutdown earthquake seismic response spectrum; and provide loads using a more realistic bolt stiffness corresponding to bolt behavior similar to operation loads under consideration.

Prior to the meeting, the NRC agreed that the seismic response issue would not be discussed in the public meeting since this issue did not directly relate to the pipe support issue. The response to this issue will be provided at a later date.

A meeting was held on June 8, 2000, to discuss the issues associated with the Non – Cited Violation issued in November 1999. During the meeting, the NRC requested the following additional information.

- Describe the design approach used.
- Describe the sampling performed at LaSalle County Station.
- Provide the computer input and output information for the cases presented in the June 8 meeting.

We requested during a July 3, 2000 call, clarification on the level of detail needed to respond to the June 8 question on computer input and output information due to its large volume. The NRC responded during a July 5, 2000 call, that a summary of the computer input and output would be sufficient. Additionally, we stated that we intended to respond to the June 8, 2000 meeting questions by expanding our responses to the NRC questions 1, 2 and 4 from Reference 4.

Additionally, we will track change to our licensing basis and the extent of condition review of this issue in our corrective action program.

Attachment 1 to this submittal contains our responses to the NRC questions 1, 2 and 4 from Reference 4 which address the information requested during the June 8, 2000 meeting.

Should you have any questions concerning this letter, please contact Mr. Frank A. Spangenberg, III, Regulatory Assurance Manager, at (815) 357-6761, extension 2383.

Respectfully,

Charles G. Pardee
Site Vice President
LaSalle County Station

Attachment

cc: Regional Administrator – NRC Region III
NRC Senior Resident Inspector – LaSalle County Station

NRC Question (1): In ComEd's March 10, 2000, letter (response to Question 1), you stated that the method described on page 12 of Calculation No. L-002424 was not a sub-structuring method, but was a simplified, conservative, bounding analysis. Please demonstrate that analyzing the supports at M09-LP28-2804, Node 6 and M093-RH04-2883S, Node 1, using your two-step analysis approach will result in more conservative anchor bolt loads than those computed using the one-step analysis approach. The one-step analysis is an analysis in which the support member(s) and the baseplate (anchor) and the anchor bolts are represented in one integrated mathematical model.

ComEd Response (1): Finite element models were developed for the two piping supports, M09-RH04-2883S and M09-LP28-2804X at the LaSalle Station. The models were created using the ANSYS finite element software package.

The primary support beams were constructed using 3-dimensional elastic beams (BEAM4). The anchor plates and embedment plates to which the beams are welded were constructed of elastic shell elements (SHELL63). Shell elements were also used to simulate the concrete wall to which the anchor/embedment plates are bolted. Finally the anchor bolts themselves were simulated with a combination of linear and non-linear springs (COMBIN14 and COMBIN39). The specifics of each model's development are described in the following sections.

Description of Finite Element Models:

Support M09-RH04-2883S

I-Beams Statistics

Support M09-RH04-2883S was constructed using two I-Beam components [Page S1 of Reference 2]. The horizontal section is a W6x25 I-Beam while the shorter vertical section is a W8x31. A fictitious beam was also included in Reference 2 to simulate the mechanical shock arrestor assembly. ANSYS BEAM4 elements need a number of section properties to simulate the beam. These properties were provided by References 3 (for the W series beams) and 2 (for the shock assembly).

An additional rigid beam was needed to accurately distribute the loads from the BEAM4 elements to the anchor plates. Conservative arbitrary values were used for this component.

Geometry of I-Beams

Page S1 of Reference 2 was also used to define the total length of the W6x25, W8x31 and Shock Arrestor Assembly beams. The rigid beams were created at the attachment plate ends of the I-Beams and were sized to correspond to the dimensions of the I-beams they were attached to. See Figure 1 for the beam arrangement and dimensions.

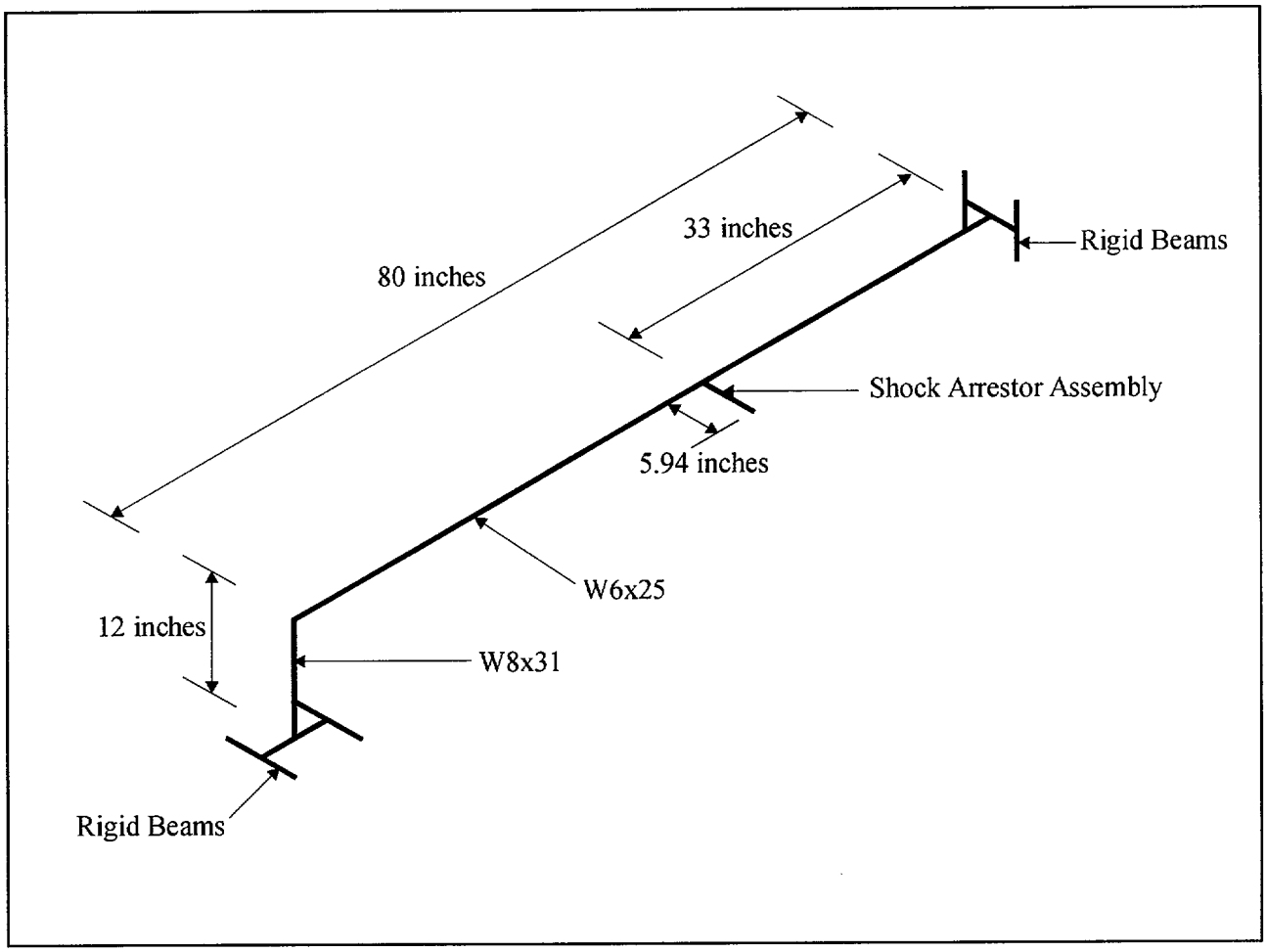

Figure 1 - Support M09-RH04-2883S Beam Arrangement

Anchor Plate Dimensions

The as-built plate dimensions of the two anchor plates for this support are provided on pages S7 and S21 of Reference 2. The anchor plate attached to the W6x25 beam is 1 inch thick and 12"x13.56" while the anchor plate attached to the W8x31 beam is 0.75 inches thick and 12"x12.25". See Figure 2 for the plates and their basic dimensions.

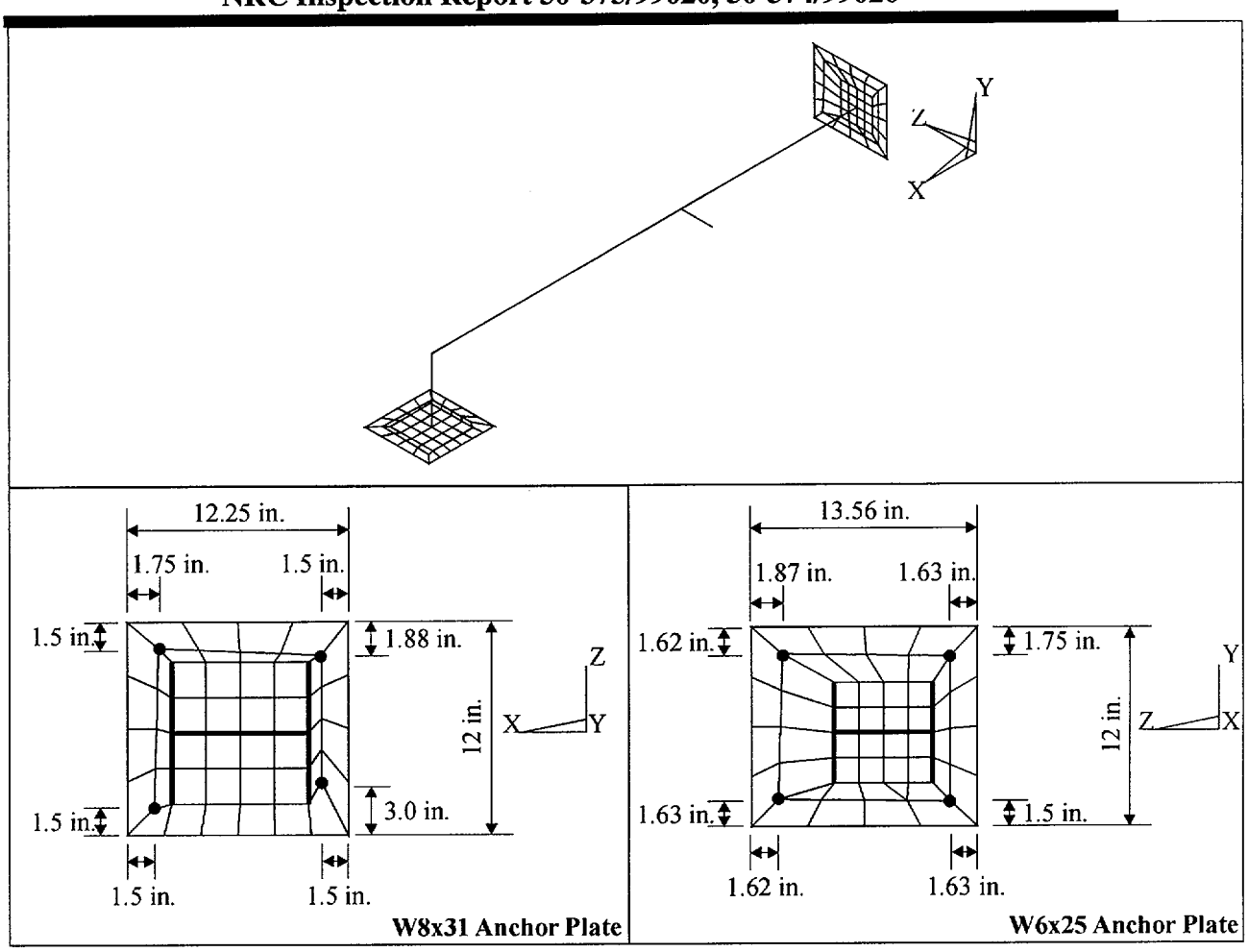

Figure 2 - - FEM and Anchor Plate Layouts for Pipe Support M09-RH04-2883S

A series of contact gap elements (CONTACT52) are applied between each anchor plate and the adjacent concrete surface plate. The contact elements were assumed to be closed and resist motion into the concrete surface while allowing the anchor plate to move freely away from the concrete surface.

Anchor Bolts

Each anchor plate was bolted to the concrete wall by four $^5/_8$" diameter Hilti Kwik bolts [2]. The anchor bolt was simulated by three springs located at the bolt location and tying the anchor plate to the concrete plate. Two of the springs represented the shear stiffness of the bolt while the third represented the anchor bolts resistance to pull-out (tension).

The pull-out (tension) stiffness of the anchor bolts was simulated by a spring with a linear stiffness of 19,200 lb/in [5]. See Figure 3 for a simplified view of the layout of the bolts, anchor plate and concrete.

The two shear stiffness springs have a linear stiffness which are conservatively assumed to be equal to the initial stiffness of the pull-out stiffness in the load displacement curves.

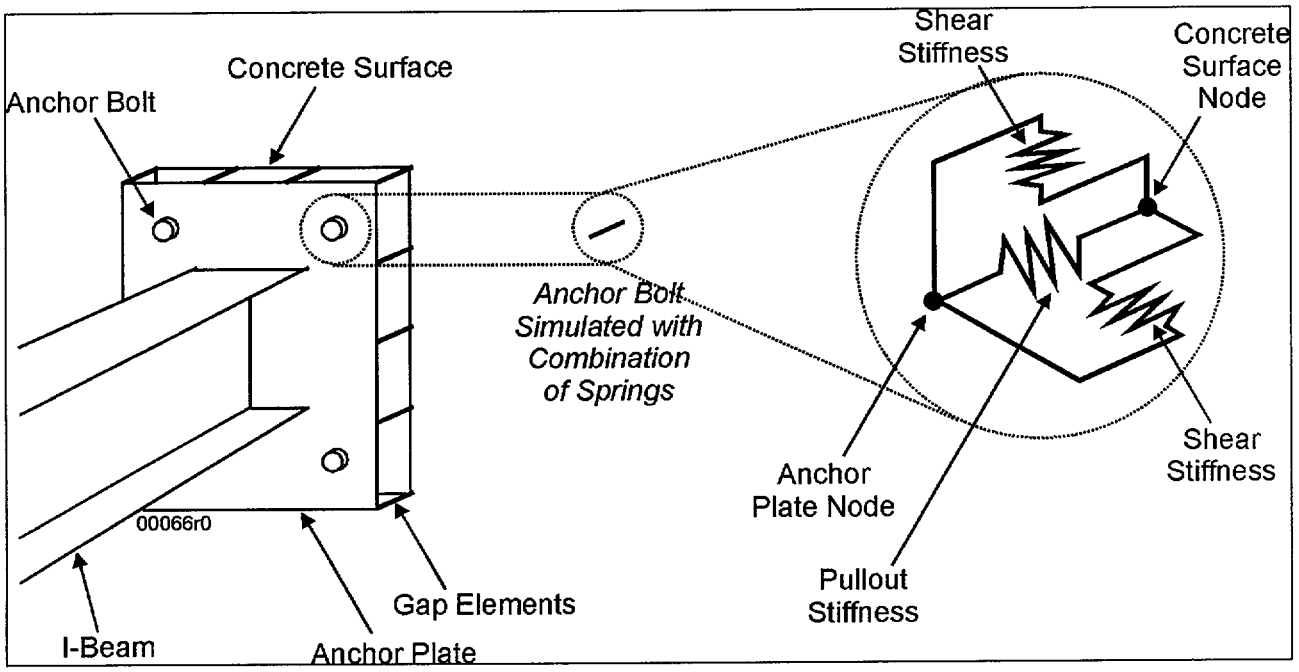

Figure 3 - Simplified View of Anchor Bolt Simulation

Boundary Conditions and Loading

The concrete surface plates were fully fixed in all degrees of freedom. The applied loads are identical to that shown on pages S1 and S2 of Reference 2.

Support M09-LP28-2804X

I-Beams Statistics

Support M09-LP28-2804X was constructed using two I-Beam components [Page X1 of Reference 2]. The primary L-shaped structure is constructed of W8x31 I-Beams. The angled support stiffener is a W4x13. A fictitious beam was also included in Reference 2 to simulate the mechanical shock arrestor assembly. ANSYS BEAM4 elements need a number of section properties to simulate the beam. These properties were provided by References 3 (for the W series beams) and 2 (for the shock arrestor assembly).

An additional rigid beam was needed to accurately distribute the loads from the BEAM4 elements to the anchor plates. Conservative arbitrary values were used for this component.

Geometry of I-Beams

Page X1 of Reference 2 was also used to define the total length of the W4x13, W8x31 and Shock Arrestor Assembly beams. The rigid beams were created at the attachment plate ends of the I-Beams and were sized to correspond to the dimensions of the I-Beams they were attached to. See Figure 4 for the beam arrangement and dimensions.

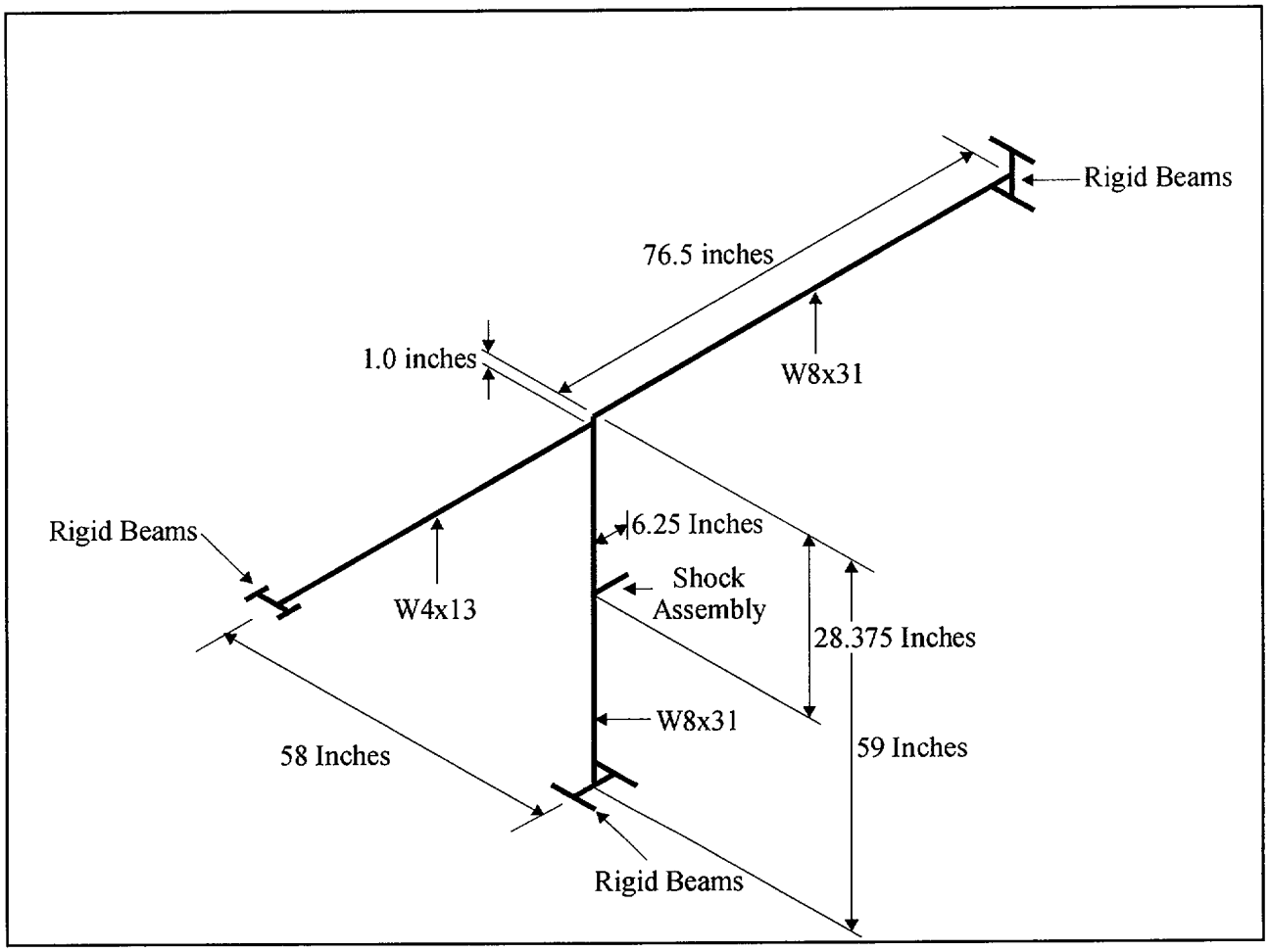

Figure 4 - Support M09-LP28-2804X Beam Arrangement

Anchor Plate and Embedment Plate Dimensions

The design dimensions from the support drawing were used [Page T104 of 2]. The I-beams were attached to the center of their respective anchor plates. The anchor plate attached to the W4x13 beam is 1 inch thick and 12"x12" while the anchor plate attached to the W8x31 beam is 1.25 inches thick and 15"x15" per the design drawing [2]. See Figure 5 for the plates and their basic dimensions.

The embedment plate design dimensions were provided in Reference 2, which indicates that the plate dimensions are 9"x33"x$^3/_4$". A total of 12 anchor studs are attached to the embedment plate in two rows of 6. The anchor studs diameters are $^3/_4$ inches. The upper flange of the W8x31 I-beam is centered between the top two rows of anchor studs. See Figure 5 for the modeled embedment plate dimensions.

A series of contact gap elements (CONTACT52) are applied between the two anchor plates and the corresponding concrete surface plate and between the embedment plate and its concrete surface plate. The contact elements are assumed to be closed and resist motion into the concrete surface while allowing the anchor plate to move freely away from the concrete surface.

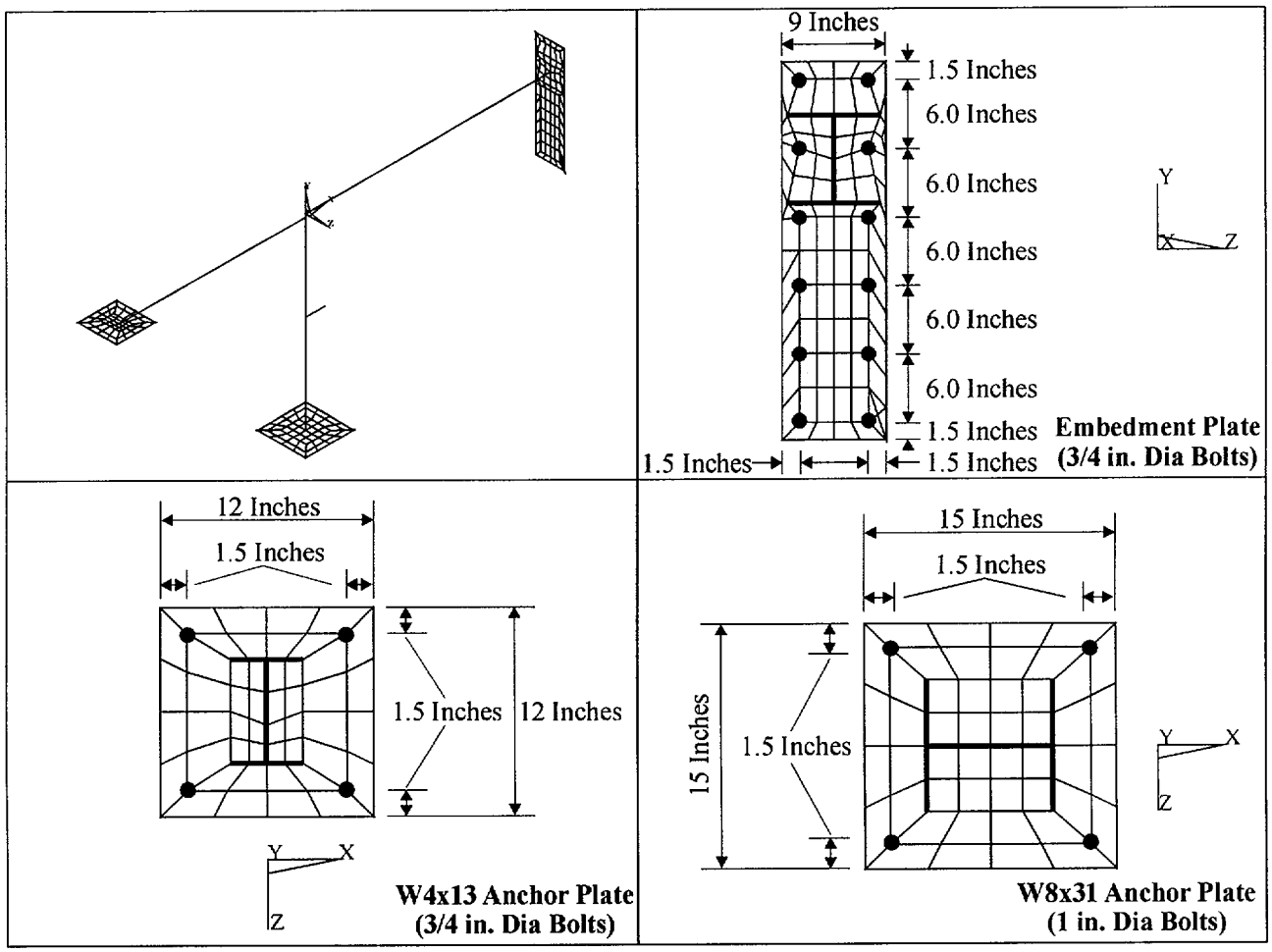

Figure 5 - FEM and Anchor/Embedment Plate Layouts for Pipe Support M09-LP28-2804X

Anchor Bolts

The W4x13 anchor plate was bolted to the concrete wall by four ¾" diameter Hilti Kwik bolts [2]. The W8x31 anchor plate used 1" diameter Kwik bolts [2].

All of the anchor bolts were simulated by three springs located at the bolt location and tying the anchor plate to the concrete plate. Two of the three springs represented the shear stiffness of the bolt while the third represented the anchor bolts resistance to pull out.

The pull out stiffness of the anchor bolts was simulated by springs with a linear stiffness of 21333 lb/in and 24500 lb/in for the ¾" and 1 inch bolts, respectively [5].

The two shear stiffness springs have a linear stiffness, which are conservatively assumed to be equal to the initial stiffness of the pull-out stiffness in the load displacement curves. See Figure 3 for a simplified view of the layout of the bolts, anchor plate and concrete.

Boundary Conditions and Loading

The concrete surface plates were fully fixed in all degrees of freedom. The applied loads are identical to that shown in pages X1 through X3 of Reference 2.

Finite Elements Model Verification:

A simple check of the basic finite element model was performed. The models included only the basic beam elements that made up the support structures (the models did not include the rigid beams and plates). The free ends were fully fixed in all translational and rotational directions and the models were loaded identically to that in Reference 2 (pages S1-S2 and X1-X3). The resulting reaction loads for several of the load cases from Reference 2 were then compared. See the following tables for the comparison results.

Reaction Comparison for Pipe Support M09-RH04-2883S

	Load Case 10		Load Case 17	
	ANSYS	STAAD III	ANSYS	STAAD III
Node	1	1	22	4
Fx (kip)	1.68	1.62	-0.02	-0.02
Fy (kip)	1.26	1.26	-0.69	-0.69
Fz (kip)	10.34	10.28	-3.14	-3.19
Mx (in-kip)	5.01	5.01	-40.43	-41.13
My (in-kip)	-206.32	-201.86	-0.68	-0.96
Mz (in-kip)	21.48	21.43	11.34	11.41

Reaction Comparison for Pipe Support M09-LP28-2804X

	Load Case 24		Load Case 16		Load Case 25	
	ANSYS	STAAD III	ANSYS	STAAD III	ANSYS	STAAD III
Node	23	6	2	2	31	7
Fx (kip)	10.76	10.38	4.76	5.03	0.10	0.10
Fy (kip)	4.72	4.68	1.26	1.29	0.56	0.56
Fz (kip)	-0.22	-0.22	-0.20	-0.21	0.40	0.40
Mx (in-kip)	-3.59	-3.48	0.00	0.00	-1.61	-1.61
My (in-kip)	0.01	0.01	-3.44	-3.48	1.25	1.38
Mz (in-kip)	-171.09	-154.71	-26.29	-24.42	-1.25	-1.38

As can be seen in the previous two tables, the results of the simplified ANSYS model are very similar to the STAAD III program used in Reference 2.

Description of Analysis:

The finite element models described above were utilized to determine the anchor bolt loads for support M09-RH04-2883S and M09-LP28-2804X. These models have integrated the structural steel and the baseplate models into one composite model. The anchor bolt stiffness values used were the linear stiffness values described above. This stiffness value corresponds to the slope of the line connecting the origin to the anchor ultimate load of an anchor test data by using the load as the ordinate and the bolt deflection as the abscissa (i.e., the secant modulus at ultimate load). The loads applied to the support were taken directly from calculation L002424. These analyses represent the one-step method described in NRC Question (1) above.

Results of Analysis:

The staff specifically requested that ComEd demonstrate that the anchor bolt loads at Node 1 of support M09-RH04-2883S and Node 6 of M09-LP28-2804X be computed using one-step method to demonstrate that resulting the anchor bolt loads are less than those found using the two-step method that was used by ComEd in L-002424. The results of the new one-step analysis and the results from L-002424 are shown below for the limiting anchor bolts at Node 1 of support M09-RH04-2883S and Node 6 of M09-LP28-2804X.

	M09-RH04-2883S Node 1	**M09-LP28-2804X Node 6**
Two-Step Method L-002424	1.825 kip (anchor # 1)	3.47 kip (envelope anchor)
One-Step Method	1.159 kip (anchor# 1, element 362)	0.89 kip (element 385)

Note: The anchor bolt loads in L-002424 for support M09-LP28-2804X were computed using conservative hand methods.

The computer input and output files for M09-RH04-2883S which yield the above results have been included below as requested by the staff at the June 8th, 2000 meeting.

References:

1) SI Calculation Package, "Finite Element Model Development of Pipe Supports", Rev. 0, SI File No. CECO-63Q-301.

2) ComEd Calculation No. L-002424 "LaSalle County Station, Units 1 and 2 – Pipe Support Calculations," April, 1999.

3) "Manual of Steel Construction," Seventh Edition, American Institute of Steel Construction, Inc., 1970

4) SI Calculation Package, "Finite Element Analysis of LaSalle Station Pipe Support", Rev. 0, SI File No. CECO-63Q-302.

5) Sargent and Lundy Structural Standard Document, Standard SDS-E11.5, Revision 2,

6) April 18, 2000 letter to Oliver O. Kingsley (ComEd) from Donna M. Skay (NRC), LaSalle County Station, Units 1 and 2 – Pipe Support Calculations.

Computer Input/Output Files for Support M09-RH04-2883S

```
/CLEAR,START
/FILN,SUP1_C

/com, -----------------------
/title,Support MO9 RH04-29838
/com, -----------------------

/PREP7

*set,posx,0.001
*set,posy,0.001

/com, ***********
/com, Preferences
/com, ***********

/NOPR
/PMETH,OFF
KEYW,PR_SET,1
KEYW,PR_STRUC,1
KEYW,PR_THERM,0
KEYW,PR_FLUID,0
KEYW,PR_MULTI,0
/GO

/com, *************
/com, Element Types
/com, *************

ET,1,BEAM4                ! 3D Beam Element
```

```
ET,2,SHELL63              ! Solid Shell
ET,3,CONTAC52             ! Contact Surface

ET,4,COMBIN39             ! Non-Linear Spring-X direction
KEYOPT,4,1,0
KEYOPT,4,2,1
KEYOPT,4,3,1
KEYOPT,4,4,0
KEYOPT,4,6,0
ET,5,COMBIN39             ! Non-Linear Spring-Y direction
KEYOPT,5,1,0
KEYOPT,5,2,1
KEYOPT,5,3,2
KEYOPT,5,4,0
KEYOPT,5,6,0

ET,6,COMBIN14             ! Linear Spring-X-Direction
KEYOPT,6,2,1
KEYOPT,6,3,0
ET,7,COMBIN14             ! Linear Spring-Y-Direction
KEYOPT,7,2,2
KEYOPT,7,3,0
ET,8,COMBIN14             ! Linear Spring-Z-Direction
KEYOPT,8,2,3
KEYOPT,8,3,0

/com, ***********************************
/com, Real Properties for Beams Elements
/com, ***********************************

r,1,7.35,17.1,53.3,6.37,6.08,
rmore,,0.463              ! W6x25
r,2,9.12, 110,  37,   8,   8,
rmore,,0.534              ! W8x31
r,3,  10,1000,1000,  10,  10            ! Fictitious Beam
r,40, 10, 100, 100,  10,  10
rmore,,100                ! Extra Length of Beam

/com, ***********************************
/com, Real Properties for Shell Elements
/com, ***********************************

r,4,1.00                                ! Base Plate
r,10,0.75                               ! Base Plate
r,5,0.001                               ! Fictious Plate

/com, ***********************************
/com, Real Properties for Contact Surface
/com, ***********************************

r,6,30e8,0.0,1.0

/com, ***********************************************
/com, Real Properties for Non-Linear Spring-5/8 Inch
/com, ***********************************************

!r,7,0.0,0.0,0.027,4808,0.694,13000
!rmore,0.825,13000,1.509,0.0

/com, ***********************************************
/com, Real Properties for Secant Spring-5/8 Inch
/com, ***********************************************
```

```
r,7,0.0,0.0,0.625,12000,1.5,28800
rmore,3.0,57600

/com, ************************************
/com, Real Properties for Shear Springs
/com, ************************************

r,8,178000

/com, *******************
/com, Material Properties
/com, *******************

/com, Carbon Steel, C>0.3% at 70F

UIMP,1,EX, , ,29e6,
UIMP,1,DENS, , ,0.283,
UIMP,1,NUXY, , ,0.3,

/com,Fictitious Rigid Material

UIMP,2,EX, , ,29e8,
UIMP,2,DENS, , ,0.0,
UIMP,2,NUXY, , ,0.3,

/com, Carbon Steel, C>0.3% at 70F No Density

UIMP,3,EX, , ,29e6,
UIMP,3,DENS, , ,0.000,
UIMP,3,NUXY, , ,0.3,

/com, *************************
/com, Build Support Beam Section
/com, *************************

k,1,0,0,0
k,2,33,0,0
k,3,80,0,0
k,4,80,-12,0

l,1,2,8
l,2,3,12
l,3,4,4

/com, ***********************************
/com, Create Rigid I-Beam Section - W6x25
/com, ***********************************

k,100,0,0, (6.37/2)-(0.456/2)
k,101,0,0,(-6.37/2)+(0.456/2)
l,1,100,2
l,1,101,2

k,102,0,(6.08/2) , (6.37/2)-(0.456/2)
k,103,0,(-6.08/2), (6.37/2)-(0.456/2)
l,100,102,2
l,100,103,2

k,104,0,(6.08/2) ,(-6.37/2)+(0.456/2)
k,105,0,(-6.08/2),(-6.37/2)+(0.456/2)
l,101,104,2
l,101,105,2
```

```
/com, ***********************************
/com, Create Rigid I-Beam Section - W8x31
/com, ***********************************

k,110,80+ (8/2)-(0.433/2),-12,
k,111,80+(-8/2)+(0.433/2),-12,
l,4,110,2
l,4,111,2

k,112,80+(8/2)-(0.433/2),-12,+(8/2)
k,113,80+(8/2)-(0.433/2),-12,-(8/2)
l,110,112,2
l,110,113,2

k,114,80+(-8/2)+(0.433/2),-12,+(8/2)
k,115,80+(-8/2)+(0.433/2),-12,-(8/2)
l,111,114,2
l,111,115,2

k,5,33,0,-5.94
l,2,5,5

/com, ***********************************************
/com, Give Attributes to Lines and Mesh Beam Elements
/com, ***********************************************

FLST,5,2,4,ORDE,2
FITEM,5,1
FITEM,5,-2
CM,_Y,LINE
LSEL, , , ,P51X
CM,_Y1,LINE
CMSEL,S,_Y
!*
FLST,5,2,4,ORDE,2
FITEM,5,1
FITEM,5,-2
CM,_Y,LINE
LSEL, , , ,P51X
CM,_Y1,LINE
CMSEL,S,_Y
!*
!*
CMSEL,S,_Y1
LATT,1,1,1,0, , ,
CMSEL,S,_Y
CMDELE,_Y
CMDELE,_Y1
!*
CM,_Y,LINE
LSEL, , , ,        3
CM,_Y1,LINE
CMSEL,S,_Y
!*
!*
CMSEL,S,_Y1
LATT,1,2,1,0, , ,
CMSEL,S,_Y
CMDELE,_Y
CMDELE,_Y1
!*
FLST,5,12,4,ORDE,2
FITEM,5,4
```

```
FITEM,5,-15
CM,_Y,LINE
LSEL, , , ,P51X
CM,_Y1,LINE
CMSEL,S,_Y
!*
!*
CMSEL,S,_Y1
LATT,2,3,1,0, , ,
CMSEL,S,_Y
CMDELE,_Y
CMDELE,_Y1
!*
CM,_Y,LINE
LSEL, , , ,       16
CM,_Y1,LINE
CMSEL,S,_Y
!*
!*
CMSEL,S,_Y1
LATT,3,40,1,0, , ,
CMSEL,S,_Y
CMDELE,_Y
CMDELE,_Y1
!*
FLST,2,16,4,ORDE,2
FITEM,2,1
FITEM,2,-16
LMESH,P51X

/com, ******************************
/com, Create Shell Plate - W6x25 Side
/com, ******************************

k,200,0,6.37,7.93
k,201,0,6.37,-5.63
k,202,0,-5.63,-5.63
k,203,0,-5.63,7.93

l,200,201
l,201,202
l,202,203
l,203,200

/com, Bolt Locations

k,210,0,6.37-1.62,7.93-1.87
k,211,0,6.37-1.75,-5.63+1.63
k,212,0,-5.63+1.50,-5.63+1.63
k,213,0,-5.63+1.63,7.93-1.62

l,200,210
l,201,211
l,202,212
l,203,213

FLST,2,4,3
FITEM,2,200
FITEM,2,210
FITEM,2,213
FITEM,2,203
A,P51X
FLST,2,4,3
```

```
FITEM,2,200
FITEM,2,201
FITEM,2,211
FITEM,2,210
A,P51X
FLST,2,4,3
FITEM,2,201
FITEM,2,202
FITEM,2,212
FITEM,2,211
A,P51X
FLST,2,4,3
FITEM,2,213
FITEM,2,212
FITEM,2,202
FITEM,2,203
A,P51X
FLST,2,5,3
FITEM,2,210
FITEM,2,102
FITEM,2,100
FITEM,2,103
FITEM,2,213
A,P51X
FLST,2,4,3
FITEM,2,210
FITEM,2,211
FITEM,2,104
FITEM,2,102
A,P51X
FLST,2,5,3
FITEM,2,211
FITEM,2,212
FITEM,2,105
FITEM,2,101
FITEM,2,104
A,P51X
FLST,2,4,3
FITEM,2,103
FITEM,2,105
FITEM,2,212
FITEM,2,213
A,P51X
FLST,2,5,3
FITEM,2,102
FITEM,2,104
FITEM,2,101
FITEM,2,1
FITEM,2,100
A,P51X
FLST,2,5,3
FITEM,2,100
FITEM,2,1
FITEM,2,101
FITEM,2,105
FITEM,2,103
A,P51X


FLST,5,10,5,ORDE,2
FITEM,5,1
FITEM,5,-10
CM,_Y,AREA
```

```
ASEL, , , ,P51X
CM,_Y1,AREA
CMSEL,S,_Y
!*
CMSEL,S,_Y1
AATT,        1,        4,    2,        0
CMSEL,S,_Y
CMDELE,_Y
CMDELE,_Y1
!*

FLST,5,8,4,ORDE,4
FITEM,5,17
FITEM,5,-20
FITEM,5,25
FITEM,5,-28
CM,_Y,LINE
LSEL, , , ,P51X
!*
CM,_Y1,LINE
CMSEL,,_Y
LESIZE,_Y1, , ,4,1,
CMDEL,_Y
CMDEL,_Y1
!*
FLST,5,8,4,ORDE,5
FITEM,5,21
FITEM,5,-24
FITEM,5,29
FITEM,5,-31
FITEM,5,33
CM,_Y,LINE
LSEL, , , ,P51X
!*
CM,_Y1,LINE
CMSEL,,_Y
LESIZE,_Y1, , ,1,1,
CMDEL,_Y
CMDEL,_Y1
!*
FLST,5,2,4,ORDE,2
FITEM,5,32
FITEM,5,34
CM,_Y,LINE
LSEL, , , ,P51X
!*
CM,_Y1,LINE
CMSEL,,_Y
LESIZE,_Y1, , ,4,1,
CMDEL,_Y
CMDEL,_Y1
!*
FLST,2,2,4,ORDE,2
FITEM,2,6
FITEM,2,-7
LCCAT,P51X
FLST,2,2,4,ORDE,2
FITEM,2,8
FITEM,2,-9
LCCAT,P51X
FLST,2,2,4,ORDE,2
FITEM,2,4
FITEM,2,-5
```

```
LCCAT,P51X
MSHKEY,0
FLST,5,10,5,ORDE,2
FITEM,5,1
FITEM,5,-10
CM,_Y,AREA
ASEL, , , ,P51X
CM,_Y1,AREA
CHKMSH,'AREA'
CMSEL,S,_Y
!*
AMESH,_Y1
!*
CMDEL,_Y
CMDEL,_Y1
CMDEL,_Y2
!*

/com, ******************************
/com, Create Shell Plate - W8x31 Side
/com, ******************************

k,300,80-6.00,-12,-5.75
k,301,80+6.25,-12,-5.75
k,302,80+6.25,-12,+6.25
k,303,80-6.00,-12,+6.25

l,300,301
l,301,302
l,302,303
l,303,300

/com, Bolt Locations

k,310,80-6.00+1.50,-12,-5.75+3.0
k,311,80+6.25-1.50,-12,-5.75+1.5
k,312,80+6.25-1.75,-12,+6.25-1.5
k,313,80-6.00+1.50,-12,+6.25-1.88

l,300,310
l,301,311
l,302,312
l,303,313

FLST,2,4,3
FITEM,2,301
FITEM,2,302
FITEM,2,312
FITEM,2,311
A,P51X
FLST,2,5,3
FITEM,2,113
FITEM,2,311
FITEM,2,312
FITEM,2,112
FITEM,2,110
A,P51X
FLST,2,5,3
FITEM,2,111
FITEM,2,4
FITEM,2,110
FITEM,2,112
FITEM,2,114
```

```
A,P51X
FLST,2,4,3
FITEM,2,114
FITEM,2,112
FITEM,2,312
FITEM,2,313
A,P51X
FLST,2,4,3
FITEM,2,313
FITEM,2,312
FITEM,2,302
FITEM,2,303
A,P51X
FLST,2,4,3
FITEM,2,300
FITEM,2,310
FITEM,2,313
FITEM,2,303
A,P51X
FLST,2,5,3
FITEM,2,310
FITEM,2,115
FITEM,2,111
FITEM,2,114
FITEM,2,313
A,P51X
FLST,2,5,3
FITEM,2,115
FITEM,2,113
FITEM,2,110
FITEM,2,4
FITEM,2,111
A,P51X
FLST,2,6,3
FITEM,2,300
FITEM,2,301
FITEM,2,311
FITEM,2,113
FITEM,2,115
FITEM,2,310
A,P51X
FLST,5,9,5,ORDE,2
FITEM,5,11
FITEM,5,-19
CM,_Y,AREA
ASEL, , , ,P51X
CM,_Y1,AREA
CMSEL,S,_Y
!*
CMSEL,S,_Y1
AATT,       1,      10,    2,       0
CMSEL,S,_Y
CMDELE,_Y
CMDELE,_Y1
!*
FLST,5,8,4,ORDE,7
FITEM,5,39
FITEM,5,-41
FITEM,5,46
FITEM,5,49
FITEM,5,-50
FITEM,5,52
FITEM,5,54
```

```
CM,_Y,LINE
LSEL, , , ,P51X
!*
CM,_Y1,LINE
CMSEL,,_Y
LESIZE,_Y1, , ,4,1,
CMDEL,_Y
CMDEL,_Y1
!*
FLST,5,8,4,ORDE,6
FITEM,5,42
FITEM,5,-45
FITEM,5,47
FITEM,5,-48
FITEM,5,51
FITEM,5,53
CM,_Y,LINE
LSEL, , , ,P51X
!*
CM,_Y1,LINE
CMSEL,,_Y
LESIZE,_Y1, , ,1,1,
CMDEL,_Y
CMDEL,_Y1
!*
FLST,5,1,4,ORDE,1
FITEM,5,38
CM,_Y,LINE
LSEL, , , ,P51X
!*
CM,_Y1,LINE
CMSEL,,_Y
LESIZE,_Y1, , ,6,1,
CMDEL,_Y
CMDEL,_Y1
!*

FLST,2,2,4,ORDE,2
FITEM,2,14
FITEM,2,-15
LCCAT,P51X
FLST,2,2,4,ORDE,2
FITEM,2,10
FITEM,2,-11
LCCAT,P51X
FLST,2,2,4,ORDE,2
FITEM,2,12
FITEM,2,-13
LCCAT,P51X
FLST,2,3,4,ORDE,3
FITEM,2,47
FITEM,2,53
FITEM,2,-54
LCCAT,P51X

MSHKEY,0
FLST,5,9,5,ORDE,2
FITEM,5,11
FITEM,5,-19
CM,_Y,AREA
ASEL, , , ,P51X
CM,_Y1,AREA
CHKMSH,'AREA'
```

```
CMSEL,S,_Y
!*
AMESH,_Y1
!*
CMDEL,_Y
CMDEL,_Y1
CMDEL,_Y2
!*

/com, ***********************************
/com, Create Contact Surface - W6x25 Side
/com, ***********************************

FLST,3,10,5,ORDE,2
FITEM,3,1
FITEM,3,-10
AGEN,2,P51X, , ,-posx, , , ,1

FLST,5,10,5,ORDE,2
FITEM,5,20
FITEM,5,-29
CM,_Y,AREA
ASEL, , , ,P51X
CM,_Y1,AREA
CMSEL,S,_Y
!*
CMSEL,S,_Y1
AATT,       1,       5,   2,       0
CMSEL,S,_Y
CMDELE,_Y
CMDELE,_Y1
!*

FLST,2,2,4,ORDE,2
FITEM,2,72
FITEM,2,-73
LCCAT,P51X
FLST,2,2,4,ORDE,2
FITEM,2,81
FITEM,2,-82
LCCAT,P51X
FLST,2,2,4,ORDE,2
FITEM,2,78
FITEM,2,-79
LCCAT,P51X
MSHKEY,0
FLST,5,10,5,ORDE,2
FITEM,5,20
FITEM,5,-29
CM,_Y,AREA
ASEL, , , ,P51X
CM,_Y1,AREA
CHKMSH,'AREA'
CMSEL,S,_Y
!*
AMESH,_Y1
!*
CMDEL,_Y
CMDEL,_Y1
CMDEL,_Y2
!*

arsel,,1,10
```

```
arasel,,20,29
narea,1

type,3
real,6
mat,1

eintf,0.01
allsel,all

/com, ***********************************
/com, Create Contact Surface - W8x31 Side
/com, ***********************************

FLST,3,9,5,ORDE,2
FITEM,3,11
FITEM,3,-19
AGEN,2,P51X, , , ,-posy, , ,1

FLST,5,9,5,ORDE,2
FITEM,5,30
FITEM,5,-38
CM,_Y,AREA
ASEL, , , ,P51X
CM,_Y1,AREA
CMSEL,S,_Y
!*
CMSEL,S,_Y1
AATT,       1,       5,   2,       0
CMSEL,S,_Y
CMDELE,_Y
CMDELE,_Y1
!*

FLST,2,2,4,ORDE,2
FITEM,2,97
FITEM,2,106
LCCAT,P51X
FLST,2,2,4,ORDE,2
FITEM,2,94
FITEM,2,-95
LCCAT,P51X
FLST,2,2,4,ORDE,2
FITEM,2,92
FITEM,2,-93
LCCAT,P51X
FLST,2,3,4,ORDE,3
FITEM,2,90
FITEM,2,105
FITEM,2,107
LCCAT,P51X

MSHKEY,0
FLST,5,9,5,ORDE,2
FITEM,5,30
FITEM,5,-38
CM,_Y,AREA
ASEL, , , ,P51X
CM,_Y1,AREA
CHKMSH,'AREA'
CMSEL,S,_Y
!*
AMESH,_Y1
```

```
!*
CMDEL,_Y
CMDEL,_Y1
CMDEL,_Y2
!*

FLST,5,18,5,ORDE,4
FITEM,5,11
FITEM,5,-19
FITEM,5,30
FITEM,5,-38
ASEL,S, , ,P51X
narea,1

type,3
real,6
mat,1

eintf,0.01

allsel,all

/com, ******************************
/com, Apply Non-Linear Springs W8x31
/com, ******************************

type,5
real,7
mat,1

e,     204 ,     104
e,     205 ,     105
e,     226 ,     115
e,     235 ,     124

/com, ******************************
/com, Apply Non-Linear Springs W6x25
/com, ******************************

type,4
real,7
mat,1

e,     143 ,      56
e,     144 ,      57
e,     156 ,      69
e,     164 ,      77

/com, *******************************
/com, Apply Linear Shear Springs W8x31
/com, *******************************

type,6
real,8
mat,1

e,     204 ,     104
e,     205 ,     105
e,     226 ,     115
e,     235 ,     124

type,8
real,8
```

```
mat,1

e,      204 ,      104
e,      205 ,      105
e,      226 ,      115
e,      235 ,      124

/com, ********************************
/com, Apply Linear Shear Springs W6x25
/com, ********************************

type,8
real,8
mat,1

e,      143 ,      56
e,      144 ,      57
e,      156 ,      69
e,      164 ,      77

type,7
real,8
mat,1

e,      143 ,      56
e,      144 ,      57
e,      156 ,      69
e,      164 ,      77

/com, ************************************
/com, Boundary Conditions on Contact Plates
/com, ************************************

esel,real,5
nelem
d,all,all
allsel,all

finish

/solu

/com, **********************
/com, Load Case 10
/com, **********************

*set,l1,1
*set,l2,1
*set,l3,-1
*set,l4,-1

acel,(-1.64*l3),(1.0*l1)+(3.07*l2),(-1.64*l4)

f,50,fy,((-0.078*l1)+(-1.353*l2))*1000
f,50,fx,1.242*1000*l3
f,50,fz,13.154*1000*l4

solve

/com, **********************
/com, Load Case 11
/com, **********************
```

```
*set,l1,1
*set,l2,1
*set,l3,-1
*set,l4,1

acel,(-1.64*l3),(1.0*l1)+(3.07*l2),(-1.64*l4)

f,50,fy,((-0.078*l1)+(-1.353*l2))*1000
f,50,fx,1.242*1000*l3
f,50,fz,13.154*1000*l4

solve

/com, **********************
/com, Load Case 12
/com, **********************

*set,l1,1
*set,l2,1
*set,l3,1
*set,l4,-1

acel,(-1.64*l3),(1.0*l1)+(3.07*l2),(-1.64*l4)

f,50,fy,((-0.078*l1)+(-1.353*l2))*1000
f,50,fx,1.242*1000*l3
f,50,fz,13.154*1000*l4

solve

/com, **********************
/com, Load Case 13
/com, **********************

*set,l1,1
*set,l2,1
*set,l3,1
*set,l4,1

acel,(-1.64*l3),(1.0*l1)+(3.07*l2),(-1.64*l4)

f,50,fy,((-0.078*l1)+(-1.353*l2))*1000
f,50,fx,1.242*1000*l3
f,50,fz,13.154*1000*l4

solve

/com, **********************
/com, Load Case 14
/com, **********************

*set,l1,1
*set,l2,-1
*set,l3,-1
*set,l4,-1

acel,(-1.64*l3),(1.0*l1)+(3.07*l2),(-1.64*l4)

f,50,fy,((-0.078*l1)+(-1.353*l2))*1000
f,50,fx,1.242*1000*l3
f,50,fz,13.154*1000*l4

solve
```

```
/com, **********************
/com, Load Case 15
/com, **********************

*set,l1,1
*set,l2,-1
*set,l3,-1
*set,l4,1

acel,(-1.64*l3),(1.0*l1)+(3.07*l2),(-1.64*l4)

f,50,fy,((-0.078*l1)+(-1.353*l2))*1000
f,50,fx,1.242*1000*l3
f,50,fz,13.154*1000*l4

solve

/com, **********************
/com, Load Case 16
/com, **********************

*set,l1,1
*set,l2,-1
*set,l3,1
*set,l4,-1

acel,(-1.64*l3),(1.0*l1)+(3.07*l2),(-1.64*l4)

f,50,fy,((-0.078*l1)+(-1.353*l2))*1000
f,50,fx,1.242*1000*l3
f,50,fz,13.154*1000*l4

solve

/com, **********************
/com, Load Case 17
/com, **********************

*set,l1,1
*set,l2,-1
*set,l3,1
*set,l4,1

acel,(-1.64*l3),(1.0*l1)+(3.07*l2),(-1.64*l4)

f,50,fy,((-0.078*l1)+(-1.353*l2))*1000
f,50,fx,1.242*1000*l3
f,50,fz,13.154*1000*l4

solve
SAVE

/post1
/input,SUP1_C,PST

  ************************
  L O A D   C A S E   # 10
  ************************


 USE LOAD STEP     1  SUBSTEP     0  FOR LOAD CASE 0
```

```
 SET COMMAND GOT LOAD STEP=      1  SUBSTEP=      1  CUMULATIVE ITERATION=
14
   TIME/FREQUENCY=  1.0000
 TITLE= Support MO9 RH04-29838

 PRINT SUMMABLE MISCELLANEOUS ELEMENT SOLUTION PER ELEMENT

 ***** POST1 ELEMENT SUMMABLE MISCELLANEOUS RECORD LISTING *****

  LOAD STEP=      1  SUBSTEP=      1
   TIME=    1.0000      LOAD CASE=   0

    ELEM    SMIS1
     357   2113.0
     358   243.08
     359   2130.9
     360   639.45
     361   796.50
     362   850.69
     363   77.580
     364   96.044

 MINIMUM VALUES
 ELEM        363
 VALUE    77.580

 MAXIMUM VALUES
 ELEM        359
 VALUE    2130.9
  ************************
  L O A D   C A S E   # 11
  ************************


 USE LOAD STEP     2  SUBSTEP     0  FOR LOAD CASE 0

 SET COMMAND GOT LOAD STEP=      2  SUBSTEP=      1  CUMULATIVE ITERATION=
27
   TIME/FREQUENCY=  2.0000
 TITLE= Support MO9 RH04-29838

 PRINT SUMMABLE MISCELLANEOUS ELEMENT SOLUTION PER ELEMENT

 ***** POST1 ELEMENT SUMMABLE MISCELLANEOUS RECORD LISTING *****

  LOAD STEP=      2  SUBSTEP=      1
   TIME=    2.0000      LOAD CASE=   0

    ELEM    SMIS1
     357   208.77
     358   1987.3
     359   358.27
     360   1790.0
     361   2.0626
     362   18.573
     363   590.40
     364   650.71

 MINIMUM VALUES
 ELEM        361
 VALUE    2.0626

 MAXIMUM VALUES
```

```
 ELEM         358
 VALUE     1987.3
  ************************
  L O A D   C A S E   # 12
  ************************


 USE LOAD STEP     3  SUBSTEP     0  FOR LOAD CASE 0

 SET COMMAND GOT LOAD STEP=     3  SUBSTEP=     1  CUMULATIVE ITERATION=
41
   TIME/FREQUENCY=  3.0000
 TITLE= Support MO9 RH04-29838

 PRINT SUMMABLE MISCELLANEOUS ELEMENT SOLUTION PER ELEMENT

 ***** POST1 ELEMENT SUMMABLE MISCELLANEOUS RECORD LISTING *****

  LOAD STEP=     3  SUBSTEP=     1
   TIME=    3.0000      LOAD CASE=   0

    ELEM    SMIS1
     357   2207.5
     358   254.12
     359   2248.7
     360   690.81
     361   872.90
     362   937.89
     363   93.219
     364   118.72

 MINIMUM VALUES
 ELEM         363
 VALUE     93.219

 MAXIMUM VALUES
 ELEM         359
 VALUE     2248.7
  ************************
  L O A D   C A S E   # 13
  ************************


 USE LOAD STEP     4  SUBSTEP     0  FOR LOAD CASE 0

 SET COMMAND GOT LOAD STEP=     4  SUBSTEP=     1  CUMULATIVE ITERATION=
53
   TIME/FREQUENCY=  4.0000
 TITLE= Support MO9 RH04-29838

 PRINT SUMMABLE MISCELLANEOUS ELEMENT SOLUTION PER ELEMENT

 ***** POST1 ELEMENT SUMMABLE MISCELLANEOUS RECORD LISTING *****

  LOAD STEP=     4  SUBSTEP=     1
   TIME=    4.0000      LOAD CASE=   0

    ELEM    SMIS1
     357   217.68
     358   2163.2
     359   415.04
     360   1986.0
     361   31.195
```

```
     362    55.667
     363    705.78
     364    793.88

 MINIMUM VALUES
 ELEM        361
 VALUE    31.195

 MAXIMUM VALUES
 ELEM        358
 VALUE    2163.2
  ************************
  L O A D   C A S E   # 14
  ************************


 USE LOAD STEP     5  SUBSTEP     0  FOR LOAD CASE 0

 SET COMMAND GOT LOAD STEP=     5  SUBSTEP=     1  CUMULATIVE ITERATION=
64
   TIME/FREQUENCY=  5.0000
 TITLE= Support MO9 RH04-29838

 PRINT SUMMABLE MISCELLANEOUS ELEMENT SOLUTION PER ELEMENT

 ***** POST1 ELEMENT SUMMABLE MISCELLANEOUS RECORD LISTING *****

  LOAD STEP=     5  SUBSTEP=     1
   TIME=    5.0000      LOAD CASE=   0

    ELEM    SMIS1
     357   2462.4
     358   294.15
     359   2566.5
     360   838.91
     361   820.10
     362   1042.3
     363   56.776
     364   206.09

 MINIMUM VALUES
 ELEM        363
 VALUE    56.776

 MAXIMUM VALUES
 ELEM        359
 VALUE    2566.5
  ************************
  L O A D   C A S E   # 15
  ************************


 USE LOAD STEP     6  SUBSTEP     0  FOR LOAD CASE 0

 SET COMMAND GOT LOAD STEP=     6  SUBSTEP=     1  CUMULATIVE ITERATION=
77
   TIME/FREQUENCY=  6.0000
 TITLE= Support MO9 RH04-29838

 PRINT SUMMABLE MISCELLANEOUS ELEMENT SOLUTION PER ELEMENT

 ***** POST1 ELEMENT SUMMABLE MISCELLANEOUS RECORD LISTING *****
```

```
 LOAD STEP=     6  SUBSTEP=     1
  TIME=    6.0000      LOAD CASE=   0

   ELEM    SMIS1
    357   322.73
    358   2933.9
    359   618.98
    360   2721.5
    361   0.0000
    362   119.34
    363   676.50
    364   979.49

MINIMUM VALUES
ELEM        361
VALUE    0.0000

MAXIMUM VALUES
ELEM        358
VALUE    2933.9
 ************************
 L O A D   C A S E   # 16
 ************************


USE LOAD STEP     7  SUBSTEP     0  FOR LOAD CASE 0

SET COMMAND GOT LOAD STEP=     7  SUBSTEP=     1  CUMULATIVE ITERATION=
89
  TIME/FREQUENCY=  7.0000
TITLE= Support MO9 RH04-29838

PRINT SUMMABLE MISCELLANEOUS ELEMENT SOLUTION PER ELEMENT

***** POST1 ELEMENT SUMMABLE MISCELLANEOUS RECORD LISTING *****

 LOAD STEP=     7  SUBSTEP=     1
  TIME=    7.0000      LOAD CASE=   0

   ELEM    SMIS1
    357   2447.0
    358   289.32
    359   2597.0
    360   877.58
    361   885.39
    362   1159.4
    363   75.740
    364   280.13

MINIMUM VALUES
ELEM        363
VALUE    75.740

MAXIMUM VALUES
ELEM        359
VALUE    2597.0
 ************************
 L O A D   C A S E   # 17
 ************************


USE LOAD STEP     8  SUBSTEP     0  FOR LOAD CASE 0
```

```
 SET COMMAND GOT LOAD STEP=      8  SUBSTEP=      1  CUMULATIVE ITERATION=
101
   TIME/FREQUENCY=  8.0000
 TITLE= Support MO9 RH04-29838

 PRINT SUMMABLE MISCELLANEOUS ELEMENT SOLUTION PER ELEMENT

 ***** POST1 ELEMENT SUMMABLE MISCELLANEOUS RECORD LISTING *****

  LOAD STEP=      8  SUBSTEP=      1
   TIME=    8.0000      LOAD CASE=   0

    ELEM    SMIS1
     357   337.52
     358   3100.5
     359   693.70
     360   2921.1
     361   11.094
     362   186.63
     363   767.86
     364   1135.3

 MINIMUM VALUES
 ELEM        361
 VALUE    11.094

 MAXIMUM VALUES
 ELEM        358
 VALUE    3100.5
```

NRC Question (2): In ComEd's March 10, 2000, letter (response to Question 2), you stated that the computer code APLAN is a fully validated and controlled program and the validation consisted of running several baseplate problems with APLAN and comparing the results against the results of the same baseplates analyzed with ADINA. The staff is concerned that the results presented in your March 10 response are counter-intuitive in that the anchor bolt's stiffness increases with increasing load.

We would like you to demonstrate that the rotational stiffness corresponding to the two bending moments, 102.89 kip-in and 17.72 kip-in, in Calculation No. L-002379, using the APLAN code are similar to the values computed using ADINA or other codes in the public domain. This may be accomplished by demonstrating that computations of the rotational stiffness using ADINA or any other computer codes in the public domain are similar to the values computed using the APLAN computer code.

ComEd Response (2): The CEA plate used in LaSalle Calculation L-002379 (Reference 1) was modeled and analyzed using the nonlinear finite element analysis code ADINA. The ADINA rotational stiffness was determined using the same methodology as that used in LaSalle Calculation No. L-002379 (Reference 1). The rotational stiffness determined using ADINA for the two moments is then compared to the rotational stiffness obtained using APLAN in Calculation No. L-002379 (Reference 1).

The public domain nonlinear finite element analysis program ADINA (Reference 3) is used to model and determine the rotational stiffness values for the two moments. ADINA was validated in accordance with the Sargent & Lundy's quality assurance requirements.

The input data for the ADINA nonlinear finite element analysis consisted of geometry, boundary conditions, material properties and loading of the CEA plate and its attachment. The plate size, material properties and loads used in this analysis were those requested by NRC in letter dated April 18, 2000 (Reference 4) and used in LaSalle Calculation L-002379.

The model included (Reference 1):

- 15"x15"x¾" concrete expansion anchor plate
- 4"x6"x1/2" tube steel attachment at the plate center

four expansion anchors:

- anchor diameter, ϕ= 3/4 in
- anchor effective length, Le=8 in

two loading cases:

- case 1: Mx=102.89 kip-in, My=-0.94 kip-in, Fz=5.46 kip
- case 2: Mx=17.72 kip-in, My=0.08 kip-in, Fz=5.64 kip

The material properties were (Reference 1):

- plate material Young's modulus, E=29,000 kip/in^2 and Poisson's ratio, γ=0.3
- anchor axial stiffness, Ke=21.33 kip/in
- concrete modulus, E=2,000 kip/in^2/in

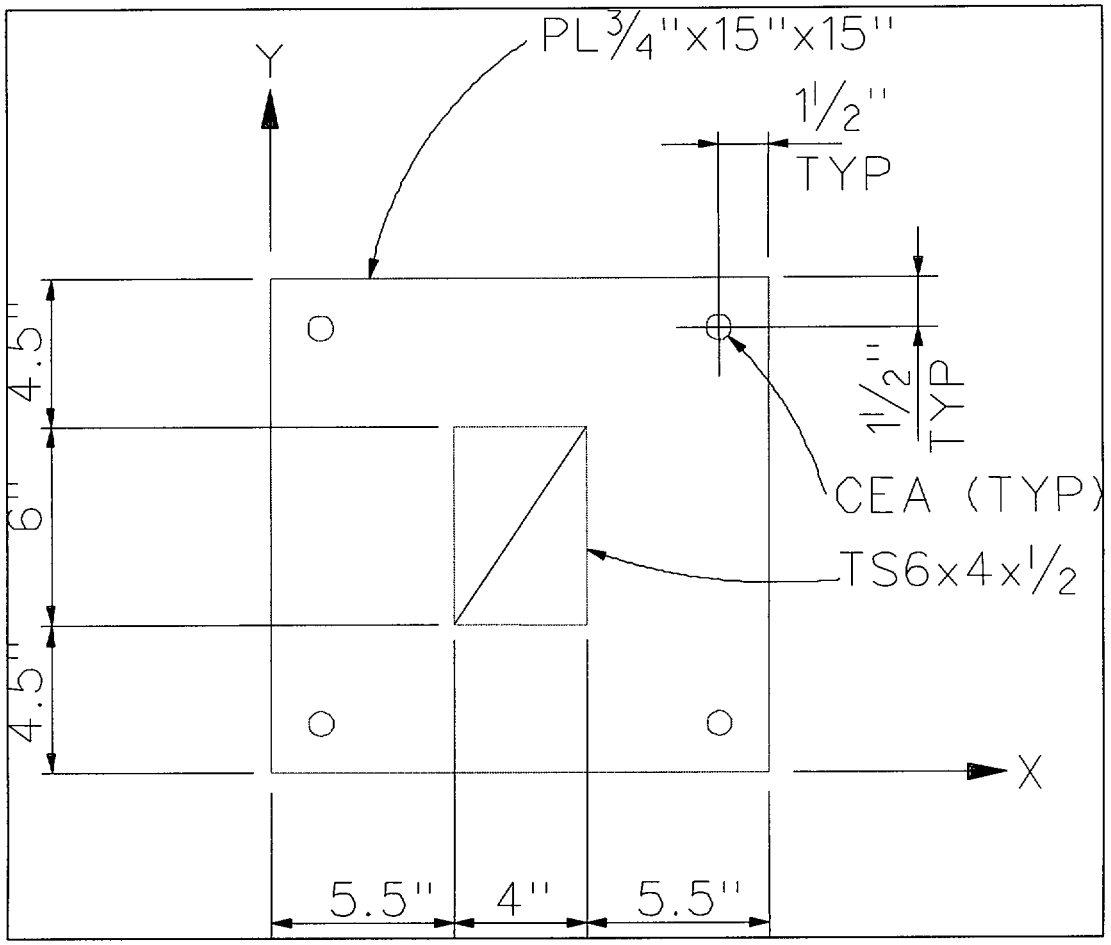

Figure 6 - Dimensions and Coordinate System for the 15"x15"x3/4" CEA Plate

The ADINA analysis is a nonlinear static analysis. The non-linearity of the solution is due to the presence of the concrete compression only support (no tension support when plate uplifts).

The CEA components are modeled as follows:

- plate is modeled by 4-node shell elements
- expansion anchors are modeled by linear 2-node truss elements with axial stiffness equal to 21.33 kip/in
- supporting concrete is modeled by 2-node non-linear (compression only) truss elements
- tube stiffening is modeled by rigid links connecting the nodes coinciding with the tube circumference to a node at the tube center

- loads are applied at the tube center node at which rigid links from tube circumference connect

Boundary conditions imposed on the model were:

- the base nodes of the truss elements representing the concrete support for anchors and plate are fully restrained
- the nodes located on the circumference of the tube steel are rigidly connected to the center of the tube steel
- since the in-plane loads do not affect the transverse displacement and rotations, the two in-plane (axial) translations and out-of-plane (torsion) rotation of the plate are restrained

Using the rotational stiffness determined above and that calculated in LaSalle Calculation No. L-002379, pages 8-11 the comparison of ADINA and APLAN stiffness is shown below:

Load case 1: M_x=102.89 kip-in, M_y=-0.94 kip-in, F_z=5.46 kip

	Rotational Stiffness about x
ADINA	80.89 kip-in/deg
APLAN	86.3 kip-in/deg
ADINA/APLAN Ratio	0.94

For load case 1, the plate is in tension (uplifting) from the concrete base at all locations except at nodes along y=0 plate edge where the plate is pressed against concrete

Load case 2: M_x=17.72 kip-in, M_y=0.08 kip-in, F_z=5.64 kip

	Rotational Stiffness about x
ADINA	47.03 kip-in/deg
APLAN	48.8 kip-in/deg
ADINA/APLAN Ratio	0.96

For load case 2, the plate is in tension (uplifting) from the concrete base at all locations.

The above comparison shows that two APLAN rotational stiffness are between 94% and 96% of the corresponding ADINA rotational stiffness.

Conclusions:

The comparison of APLAN and ADINA rotational stiffness corresponding to the two bending moments requested by NRC, M_x = 102.89 kip-in and M_x = 17.72 kip-in, shows that the APLAN rotational stiffness values are similar to the ADINA rotational stiffness values.

The anchor plate rotational stiffness is higher for the bending moment of 102.89 kip-in because the larger bending moment (102.89 kip-in vs. 17.72 kip-in) and slightly smaller tension load (5.46 kip vs. 5.64 kip) produce plate compression along the entire edge for the

higher bending case, which increases the moment arm and produces higher rotational stiffness than the lower bending case in which the entire plate is in tension (uplifting).

Input/Output Files:

At the June 8, 2000 meeting the staff requested that the input and output files for this analysis be submitted with this response. The ADINA output files are in excess of 1200 pages and are maintained on microfilm. This issue was discussed by ComEd with the NRR Project Manger on July 3 and July 5, 2000. Consequently, ComEd will not be submitting these files with this response. If a detailed review of the input and output files is required we would like to discuss alternative means of supporting this review.

References:

1. LaSalle Calculation No. L-002379, Rev. 3, April 8, 1999
2. Sargent & Lundy Computer Program No. 03.7.282-1.10, "APLAN – Attachment Plate Analysis"
3. Sargent & Lundy Computer Program No. 03.7.315-3.0, "ADINA – Automatic Dynamic Incremental Nonlinear Analysis", ADINA R&D Inc. Version 7.2.3
4. Letter from Donna M. Skay of NRC to Oliver O. Kingsley of ComEd, on "LaSalle County Station, Units 1 and 2 – Pipe Support Calculations", April 18, 2000

NRC Question (4): In ComEd's March 10, 2000, submittal, you stated that you had used a secant modulus at ultimate load (anchor failure) as your anchor bolt stiffness in calculating the bending moment generated at the anchorage. Your secant modulus value was the slope of the line connecting the origin to the anchor ultimate load of an anchor test data by using the load as the ordinate and the bolt deflection as the abscissa.

The staff considers the use of a secant modulus based on the ultimate load to be non-conservative since the maximum allowable anchor bolt loads are typically ¼ of the ultimate load. The staff considers that the actual secant modulus should be the slope of the line connecting the origin to a bolt load value corresponding to ¼ of the ultimate load. The secant modulus, or bolt stiffness, corresponding to the actual load on the bolt is about a magnitude higher than the secant modulus that ComEd had used to calculate the bending moment generated at the anchorage. Please calculate the bending moment generated at the anchorages and the corresponding bolt loads for the supports identified in Item 1, above, using a more realistic bolt stiffness corresponding to bolt behavior similar to operational loads under consideration.

ComEd Response (4): The finite element models described in the response to Question (1) above were utilized to develop the response to this Question. The only modifications that were made was to the stiffness model for the anchor bolts. The pull-out (tension) stiffness was modeled using a typical load vs. displacement curve. The load vs. displacement values are shown in the tables below for each of the sizes of anchors used.

Typical Load vs. Displacement for 5/8 in Diameter Hilti Kwik Bolt	
Displacement (in)	**Load (lb)**
0.027	4808
0.694	13000
0.825	13000
1.509	0

Typical Load vs. Displacement for 3/4 in. Diameter Hilti Kwik Bolt		**Typical Load vs. Displacement for 1 in. Diameter Hilti Kwik Bolt**	
Displacement (in)	**Load (lb)**	**Displacement (in)**	**Load (lb)**
0.033	6417	0.044	9820
0.833	17350	1.110	26550
0.979	17350	1.277	26550
1.8	0	2.371	0

The support model for M09-RH04-2883S was incrementally loaded from 1% of design load to 500% of design load. The model for M09-LP28-2804X was incrementally loaded from 25% to 3500% of design load.

Summary of Analysis Results:

M09-RH04-2883S

Using the one-step model Node 1 does not control the anchor bolt design, as was the case with the two step approach. This is a result of the more detailed model and integration of the baseplate stiffnesses with the structural steel solution. In the two-step model (Calculation L-02424), the structural solution was completed using STADD III and ideal boundary conditions at the ends (e.g., fixed). Given the integration of baseplates and the steel, the need to make such assumptions is no longer needed. Consequently, the loads that are applied have been redistributed from one baseplate to the other. The baseplate at the location of Node 4 (as depicted in L-02424) now contains the most highly loaded anchor. This anchor bolt is element 358 and is the first anchor bolt to reach the design ultimate as the structure is incrementally loaded.

While Node 1 no longer governs, the highest loaded bolt at node 1 is found at element 364. As discussed in the response to Question 1, the limiting element using the secant modulus at design ultimate is element 362. A comparison of the secant modulus results below shows that there is little difference in the loading.

Element	Pull-Out Load Using Secant Modulus at Design Ultimate
362	1.159 kip
364	1.135 kip

The pull-out loads at elements 364 and 358 using the secant modulus at design ultimate and using the non-linear stiffness curve are shown below for design basis loading. Additionally, the multiplier on design load is shown. This multiplier is the order of magnitude that the applied support load was increased before the anchor reached the design ultimate capacity.

Comparison of Secant Modulus at design Ultimate vs. Non-Linear Anchor Stiffness

	Element 358	Element 364
Secant Modulus	3100 lbs	1135 lbs
Non-Linear Stiffness	3333 lbs	3923 lbs
Ultimate pull-out capacity shear corrected	12000 lbs	12000 lbs
Design Load Multiplier at anchor failure	4.12	>4.46 (did not reach failure)

The significant change in load for element 364 is due to load redistribution from the increased stiffness in the operating range of the non-linear stiffness curve. However, more importantly, the load applied to the support could be increased by over 4 times before the anchor bolt reached its ultimate capacity. However, if the safety factor on the

anchor bolt is defined by dividing the ultimate pull-out capacity by the design pull-out load, the safety factor is less than 4. In the worst case, it is 3.1.

M09-LP28-2804X

Using the one-step model Node 6 controls the anchor bolt design, as was the case with the two step approach. The controlling anchor bolt is element 385 and is the first anchor bolt to reach the design ultimate as the structure is incrementally loaded.

The pull-out loads at element 385 using the secant modulus at design ultimate and using the non-linear stiffness curve are shown below for design basis loading. Additionally, the multiplier on design load is shown. This multiplier is the order of magnitude that the applied support load was increased before the anchor reached the design ultimate capacity.

Comparison of Secant Modulus at design Ultimate vs. Non-Linear Anchor Stiffness

	Element 385
Secant Modulus	890 lbs
Non-Linear Stiffness	1412 lbs
Ultimate pull-out capacity shear corrected	21000 lbs
Design Load Multiplier at anchor failure	30.45

The change in load for element 385 is due to the increased stiffness in the operating range of the non-linear stiffness curve. More importantly, the load applied to the support could be increased by over 30 times before the anchor bolt reached its ultimate capacity. If the safety factor on the anchor bolt is defined by dividing the ultimate pull-out capacity by the design pull-out load, the safety factor is greater than 14.

Conclusions:

The new analysis results presented above demonstrate that the two supports that were analyzed can have the load increased by over 4 times the design load before any anchorage approaches its ultimate design capacity (i.e., failure limit). Consequently, there are no safety concerns related to the design and construction of the pipe supports at LaSalle County Station. However, the anchor bolt safety factors as defined by IEB 79-02 are not always maintained above 4. While there are no safety concerns regarding these results, the methods of analysis based on the ComEd license submittal dated July 5, 1979 do not ensure strict compliance with the LaSalle County Station commitments with regard to IEB 79-02.

Extent of Condition:

The findings above were presented for two specific supports. However, the conclusions with regard to a lack of safety significance are applicable to all pipe supports at LaSalle County Station. That is, the load on any pipe support can be increased by over 4 times before the anchorages approach ultimate capacity.

The basis for extending these conclusions is as follows:

A sample of all Class A, B, and C piping subsystems (1039 subsystems in the base population) was selected for review. The sample was determined in accordance with MIL-STD-105E to establish a 95% confidence of 95% reliability for a population of 1039. This methodology resulted in a minimum sample size of 64 subsystems. There were 747 supports in these 64 subsystems. All supports that were attached to embedment plates and/or concrete expansion anchors were selected from the population of 747. This resulted in a remaining population of 111 supports.

Of the 111 pipe supports, 79 utilized "hinged" end conditions at the CEA or embedment plates. As described in Sargent Lundy Report SL-5275 Rev. 2, these 79 supports were re-analyzed using assumptions other than hinged end assumptions. Of these 79 supports, 10 required the use of the semi-rigid approach that was previously presented to the staff. The semi-rigid methods have been subsequently labeled the "two-step" method and are the subject of the response to Questions 1 and 4 above. Within the limitations of the sampling described above (e.g., 95%/95% confidence interval), these 10 supports have the 10 most highly loaded anchorages at the LaSalle station. The two supports above are both included in this population of 10 supports. Additionally, support M09-RH04-2883S has the highest interaction ratio (=0.96) of any support of the population. Consequently, this support would be expected to be the limiting support at the LaSalle County Station in the 95%/95% confidence interval.

Based on this sampling methodology, the support analysis and results described above can be considered to be bounding of all supports that utilize embedment plates or CEA's at LaSalle.

Corrective Actions:

As a result of the above findings, LaSalle Station will make the following changes to our commitments regarding IEB 79-02 and analysis methods:

All future analyses which are related to pipe support modification (i.e., physical changes to the support) or as a result of new pipe support design will utilize anchor bolt stiffness values that correspond to the bolt behavior under operational loads or greater, e.g., the secant modulus at design loading or the initial tangent modulus.

The existing pipe supports analyses have been shown to be acceptable with regard to safety by virtue of demonstrating a load increase of greater than 4 can be accommodated. Therefore, these new methods will not be back fit to the as-built plant, nor will they be employed when evaluating minor load changes that do not necessitate the physical modification of any pipe supports.