NUREG/CR-6677
INEEL/EXT-2000-00888

Evaluation of Risk Associated With Intergranular Stress Corrosion Cracking in Boiling Water Reactor Internals

Idaho National Engineering and Environmental Laboratory
Bechtel BWXT Idaho, LLC

U.S. Nuclear Regulatory Commission
Office of Nuclear Regulatory Research
Washington, DC 20555-0001

AVAILABILITY OF REFERENCE MATERIALS IN NRC PUBLICATIONS

NRC Reference Material

As of November 1999, you may electronically access NUREG-series publications and other NRC records at NRC's Public Electronic Reading Room at www.nrc.gov/NRC/ADAMS/index.html. Publicly released records include, to name a few, NUREG-series publications; *Federal Register* notices; applicant, licensee, and vendor documents and correspondence; NRC correspondence and internal memoranda; bulletins and information notices; inspection and investigative reports; licensee event reports; and Commission papers and their attachments.

NRC publications in the NUREG series, NRC regulations, and *Title 10, Energy*, in the Code of *Federal Regulations* may also be purchased from one of these two sources.

1. The Superintendent of Documents
   U.S. Government Printing Office
   P. O. Box 37082
   Washington, DC 20402–9328
   www.access.gpo.gov/su_docs
   202–512–1800
2. The National Technical Information Service
   Springfield, VA 22161–0002
   www.ntis.gov
   1–800–553–6847 or, locally, 703–605–6000

A single copy of each NRC draft report for comment is available free, to the extent of supply, upon written request as follows:

Address: Office of the Chief Information Officer,
Reproduction and Distribution
Services Section
U.S. Nuclear Regulatory Commission
Washington, DC 20555-0001
E-mail: DISTRIBUTION@nrc.gov
Facsimile: 301–415–2289

Some publications in the NUREG series that are posted at NRC's Web site address www.nrc.gov/NRC/NUREGS/indexnum.html are updated regularly and may differ from the last printed version.

Non-NRC Reference Material

Documents available from public and special technical libraries include all open literature items, such as books, journal articles, and transactions, *Federal Register* notices, Federal and State legislation, and congressional reports. Such documents as theses, dissertations, foreign reports and translations, and non-NRC conference proceedings may be purchased from their sponsoring organization.

Copies of industry codes and standards used in a substantive manner in the NRC regulatory process are maintained at—

The NRC Technical Library
Two White Flint North
11545 Rockville Pike
Rockville, MD 20852–2738

These standards are available in the library for reference use by the public. Codes and standards are usually copyrighted and may be purchased from the originating organization or, if they are American National Standards, from—

American National Standards Institute
11 West 42nd Street
New York, NY 10036–8002
www.ansi.org
212–642–4900

The NUREG series comprises (1) technical and administrative reports and books prepared by the staff (NUREG–XXXX) or agency contractors (NUREG/CR–XXXX), (2) proceedings of conferences (NUREG/CP–XXXX), (3) reports resulting from international agreements (NUREG/IA–XXXX), (4) brochures (NUREG/BR–XXXX), and (5) compilations of legal decisions and orders of the Commission and Atomic and Safety Licensing Boards and of Directors' decisions under Section 2.206 of NRC's regulations (NUREG–0750).

DISCLAIMER: This report was prepared as an account of work sponsored by an agency of the U.S. Government. Neither the U.S. Government nor any agency thereof, nor any employee, makes any warranty, expressed or implied, or assumes any legal liability or responsibility for any third party's use, or the results of such use, of any information, apparatus, product, or process disclosed in this publication, or represents that its use by such third party would not infringe privately owned rights.

NUREG/CR-6677
INEEL/EXT-2000-00888

Evaluation of Risk Associated With Intergranular Stress Corrosion Cracking in Boiling Water Reactor Internals

Manuscript Completed: June 2000
Date Published: July 2000

Prepared by
A.G. Ware, D.K. Morton, M.E. Nitzel, S.A. Eide

Idaho National Engineering and Environmental Laboratory
Bechtel BWXT Idaho, LLC
Idaho Falls, ID 83415-3129

T.Y. Chang, NRC Project Manager

Prepared for
Division of Engineering Technology
Office of Nuclear Regulatory Research
U.S. Nuclear Regulatory Commission
Washington, DC 20555-0001
NRC Job Code W6529

ABSTRACT

Intergranular stress corrosion cracking (IGSCC) has been detected in a number of Boiling Water Reactor (BWR) vessel internals. The number of different types of components that have experienced cracking has increased over the years. Based on evaluations submitted by General Electric, BWR owners, and the BWRVIP group, the Office of Nuclear Reactor Regulation of the Nuclear Regulatory Commission has determined that the short-term risk significance of cracking of BWR vessel internals is acceptable. The purpose of this report is to begin an evaluation of the long-term risk associated with IGSCC of BWR vessel internals. The differences in BWR types were studied, the history of IGSCC cracking in reactor internals was catalogued, and tables of accident scenarios involving cracked internals were developed. Screening methods were developed to reduce the number of accident scenarios that represent more significant risk to a more manageable number, and a final list of potential concerns was developed which ranked the scenarios as having a high, medium, or low impact on increasing the core damage frequency based on a qualitative risk assessment. In order to narrow the scope of the problem, the investigation was limited to a single BWR type (high-power BWR/4). Using several screening methods, the scenarios to investigate were reduced by about 2/3. To further concentrate the investigation and develop a methodology to be used, scenarios resulting from the failure of a single component (jet pump) were evaluated. The evaluation was then extended to the remaining reactor internals components. It was concluded that with the current BWRVIP inspection, monitoring, and repair proposals, there is expected to be no significant increase in CDF ($< 5 \times 10^{-6}$ events/yr) caused by failures of BWR internals. That is, IGSCC problems can be identified and evaluated or corrected, to preclude a significant increase in the CDF.

CONTENTS

ABSTRACT iii

EXECUTIVE SUMMARY xvii

ACKNOWLEDGMENTS xxiii

ACRONYMS xxv

1. INTRODUCTION 1

1.1 Objective and Scope 3

1.2 Causes of IGSCC 3

1.2.1 Material 6
1.2.2 Environment 6
1.2.3 Stress 7

1.3 Factors that Enhance IGSCC 7

1.3.1 ECP and Conductivity 7
1.3.2 Crevices 8
1.3.3 Neutron Radiation 8
1.3.4 Cold Work 8

1.4 IGSCC Aging Management Methods 8

1.5 Report Outline 9

2. DESIGN SIMILARITY OF BWR INTERNALS 11

2.1 General Design of BWR Internals 11

2.1.1 In-core Instrument Housings and Guide Tubes 15
2.1.2 IRM/SRM/LPRM Instrumentation and Dry Tubes 16
2.1.3 Neutron Source Holders 16
2.1.4 Core dP and SLC Lines 17
2.1.5 Control Rod and Drive Assemblies 18
2.1.6 Fuel Supports 22
2.1.7 Core Shroud Support 22
2.1.8 Access Hole Covers 24
2.1.9 Core Plate 24
2.1.10 Core Shroud 24
2.1.11 Core Shroud Head and Bolts 28
2.1.12 Guide Rods 28
2.1.13 Top Guide (or grid for BWR/6s) 31
2.1.14 Core Spray or HPCS / LPCS Assemblies 31
2.1.15 LPCI Assemblies 33
2.1.16 Feedwater Sparger 33

2.1.17 Jet Pump Assemblies 33
2.1.18 Steam Separator and Standpipes 36
2.1.19 Steam Dryer Assemblies 39
2.1.20 Head Spray Nozzle 39
2.1.21 Surveillance Specimen Holders 39

2.2 Variations and Similarities Based on BWR Type 39

2.2.1 BWR/2 Reactor Type 47
2.2.2 BWR/3 Reactor Type 47
2.2.3 BWR/4 Reactor Type 48
2.2.4 BWR/5 Reactor Type 49
2.2.5 BWR/6 Reactor Type 49

3. CORE SHROUDS 51

3.1 Degradation History and Significant Documentation Related to Core Shroud Cracking 51

3.2 Physical Plant Modifications 57

3.3 Aging Management Plan 59

4. OTHER IGSCC-AFFECTED REACTOR INTERNALS 61

4.1 Top Guide 64

4.1.1 Purpose 64
4.1.2 Description 65
4.1.3 Degradation 66
4.1.4 Safety Significance of Cracking 66
4.1.5 Aging Management 68

4.2 Core Plate 68

4.2.1 Purpose 68
4.2.2 Description 68
4.2.3 Degradation 69
4.2.4 Safety Significance of Cracking 69
4.2.5 Aging Management 69

4.3 Jet Pump Hold-Down Beams 70

4.3.1 Purpose 70
4.3.2 Description 70
4.3.3 Degradation 70
4.3.4 Safety Significance of Cracking 72
4.3.5 Aging Management 72

4.4 Access Hole Cover In Core Shroud (Baffle) Support Plate 74

4.4.1 Purpose 74

4.4.2 Description 74
4.4.3 Degradation 74
4.4.4 Safety Significance of Cracking 74
4.4.5 Aging Management 75

4.5 Core Spray Piping and Sparger 75

4.5.1 Purpose 75
4.5.2 Description 75
4.5.3 Degradation 75
4.5.4 Safety Significance of Cracking 76
4.5.5 Aging Management 76

4.6 IRM/SRM Housings and Dry Tubes 77

4.6.1 Purpose 77
4.6.2 Description 77
4.6.3 Degradation 78
4.6.4 Safety Significance of Cracking 78
4.6.5 Aging Management 80

4.7 Core Shroud Head Bolts 80

4.7.1 Purpose 80
4.7.2 Description 80
4.7.3 Degradation 80
4.7.4 Safety Significance of Cracking 81
4.7.5 Aging Management 81

4.8 Steam Dryer and Support Ring 81

4.8.1 Purpose 81
4.8.2 Description 81
4.8.3 Degradation 81
4.8.4 Safety Significance of Cracking 82
4.8.5 Aging Management 82

4.9 Control Rods 82

4.9.1 Purpose 82
4.9.2 Description 82
4.9.3 Degradation 82
4.9.4 Safety Significance of Cracking 83
4.9.5 Aging Management 83

4.10 Neutron Source Holder 83

4.10.1 Purpose 83
4.10.2 Description 84

4.10.3 Degradation 84
4.10.4 Safety Significance of Cracking 84
4.10.5 Aging Management 84

4.11 Core Shroud Support 84

4.11.1 Purpose 84
4.11.2 Description 85
4.11.3 Degradation 85
4.11.4 Safety Significance of Cracking 85
4.11.5 Aging Management 85

4.12 Jet Pump Inlet Riser Elbow 86

4.12.1 Purpose 86
4.12.2 Description 86
4.12.3 Degradation 86
4.12.4 Safety Significance of Cracking 86
4.12.5 Aging Management 86

5. PLANT DESIGN BASES AND SHUTDOWN SYSTEMS 87

5.1 Initiating Events and Loadings 87

5.2 Systems Relied Upon to Mitigate a Significant Initiating Event 89

6. FAILURE MODE DETERMINATION 95

6.1 Assumptions Made in Identifying the Consequences of IGSCC-Induced Failures 95

6.2 System Failures 97

6.3 Mechanistic Failures 100

6.4 Screening Criteria to Determine the Final Scenarios with Significant Contribution to Risk 104

6.5 Potential BWR Design Vulnerabilities Based on Cursory Review of Final Scenarios 124

7. PRELIMINARY RISK ASSESSMENT 125

7.1 Potential Concerns 125

7.2 Areas for Additional Analysis 142

8. REDUCTION OF SCENARIOS 145

8.1 Plan to Narrow Scope 145

8.1.1 Plant Selection 146

8.1.2 Initial Component Selection 146
8.1.3 Extent of Calculations 146
8.1.4 Expert Panels 147
8.1.5 Screening Criterion 147
8.1.6 PRA Selection and Modification 149

8.2 Initial Reduction of Scenarios 151

8.2.1 Non-BWR/4 Scenarios 151
8.2.2 Low Risk From PRA 151
8.2.3 BWR Control Rod Failure-to-Insert Criterion 151
8.2.4 LOCA Losses Less than Makeup 152
8.2.5 Redundant Instrumentation 152
8.2.6 Low Number of Blocked Fuel Channels 152

9. JET PUMPS EVALUATION 157

9.1 Background Information 157

9.1.1 Line Break Initiating Frequencies 157
9.1.2 Seismic Initiating Frequencies 159
9.1.3 Jet Pump Failure Rates 159
9.1.4 Crack Growth Rates 162

9.2 Structural Evaluation 163

9.2.1 Cascading Failures 163
9.2.2 Loose Parts 165
9.2.3 Seismic Evaluation 165

9.3 Probability Estimates 166

9.3.1 Loose Parts 167
9.3.2 Jet Pump Impact 169

9.4 Results 170

9.4.1 Normal Operation 170
9.4.2 Main Steam Line Break 171
9.4.3 Feedwater Line Break 171
9.4.4 Recirculation Line Break 171
9.4.5 Seismic Event 171

9.5 Conclusions 171

10. EVALUATION OF REMAINING COMPONENTS 173

10.1 Crack Initiation and Growth 173

10.2 Reliability of Inservice Inspection of BWR Vessel Internals 174

10.2.1 Inspection Techniques 174
10.2.2 Reliability of Ultrasonic Testing of BWR Wrought Stainless Steel Components 176
10.2.3 Inspection Guidance for Vessel Internals 180

10.3 Initiating Event Frequencies 182

10.3.1 Seismic Events 183
10.3.2 Line break events 185

10.4 Component Fragilities 185

10.5 Component Evaluations 185

10.5.1 In-Core Instrument Housings (scenarios 1-4) 185
10.5.2 In-Core Instrument Guide Tube (scenarios 5- 8) 186
10.5.3 Instrumentation and Dry Tubes (scenarios 9-12) 186
10.5.4 Core dp line (scenarios 13-17) 186
10.5.5 SLC line (scenarios 18-22) 186
10.5.6 CRD Blade (scenarios 23-26) 186
10.5.7 CRD Housing (scenarios 27-32) 186
10.5.8 CRD Guide Tube (scenarios 33-36) 187
10.5.9 CRD Stub Tube (scenarios 37-42) 187
10.5.10 CRD Index Tube/Spud/Thermal Sleeve (scenarios 43-52) 187
10.5.11 Fuel Support (scenarios 53 and 54) 187
10.5.12 Core Shroud Support (scenarios 55- 57) 187
10.5.13 Access Hole Cover (scenarios 58-60) 187
10.5.14 Core Plate (scenarios 61-63) 188
10.5.15 Core Shroud (scenarios 64-69) 188
10.5.16 Core Shroud Head/Bolts (scenarios 70-74) 188
10.5.17 Guide Rod (scenario 75) 188
10.5.18 Top Guide (scenarios 76-78) 188
10.5.19 Core Spray (scenarios 79-87) 188
10.5.20 Feedwater Sparger (scenarios 101-106) 189
10.5.21 Jet Pump (scenarios 107-134) 189
10.5.22 Standpipe and Steam Separators (scenarios (135-144) 189
10.5.23 Head Spray (scenario 145) 189
10.5.24 Surveillance Specimen Holder (scenarios 146-148) 189

10.6 Potential Increase in Core Damage Frequency Caused by Multiple Vessel Internals Failures 189

10.6.1 Normal Operation 190
10.6.2 Accident Conditions 190
10.6.3 Seismic Events 191

10.7 Summary 191

11. SUMMARY 193

12. REFERENCES 195

Appendix A—Systems Functional for Mitigation.

Appendix B—Letter Report from R. W. Staehle and G. S. Was.

Appendix C—Letter Report from R. P. Kennedy (August 1998).

Appendix D—Letter Report from R. P. Kennedy (September 1998).

Appendix E—Scientech TRAC-B Results

LIST OF FIGURES

1-1. BWR reactor internal components that have experienced IGSCC damage 2

2-1. BWR/2 reactor vessel internals 12

2-2. BWR/3 or BWR/4 reactor vessel internals 13

2-3. BWR/5 or BWR/6 reactor vessel internals 14

2-4. In-core instrumentation housing and guide tube 16

2-5. In-core instrumentation dry tube 17

2-6. Typical control rod and drive assembly inside the reactor vessel 19

2-7. Control rod (blade) 20

2-8. Typical control rod drive housing, stub tube, and guide tube arrangement 20

2-9. Control rod arrangement in lower plenum 21

2-10. Four lobed and peripheral fuel support pieces 23

2-11. Typical core shroud support materials and weldments 25

2-12. Access hole cover plate 25

2-13. Lower plenum region internals including core plate 26

2-14. Arrangement of core shroud, core spray spargers, core shroud support, and jet pumps 27

2-15. Arrangement of core shroud head, head bolts, standpipes, steam separators, and guide rods 29

2-16. Core shroud head bolts 30

2-17. Fabrication details of typical BWR/2 through BWR/5 top guide 32

2-18. Core spray sparger 32

2-19. Feedwater sparger with holes 34

2-20. Feedwater sparger with nozzles 35

2-21. Jet pump assembly 37

2-22. Core submersion capability of jet pump system 38

2-23. Steam separator assembly 40

2-24. Steam dryer assembly 41

3-1. Typical core shroud weld locations 52

3-2. Details of Brunswick Unit 1 significant core shroud cracking 54

3-3. Details of Dresden Unit 3 significant lower region core shroud cracking 55

4-1. Location of cracking in top guide and core plate of overseas BWR 67

4-2. Location of cracking in jet pump hold-down beams 71

4-3. Probable jet pump disassembly from hold-down beam failure 73

4-4. Location of core spray sparger cracking at Oyster Creek in 1980 77

4-5. Location of dry tube cracking 79

10-1. Detection of intergranular stress corrosion cracking in 10 in. stainless steel pipe (Simonen, 1990) 177

10-2. Logistic curve fit to POD data with 95% bounds (wrought SS with IGSCC, near-side inspection, all teams). a) POD vs. depth, b) POD vs. length (Heasler and Doctor, 1996 177

10-3. Logistic curve fit to POD data with 95% bounds (wrought SS with IGSCC, far-side inspection, all teams). a) POD vs. depth, b) POD vs. length (Heasler and Doctor 1996) 178

10-4. Logistic curve fit to POD data versus crack size for near-side IGSCC cracks in wrought stainless steel material (Doctor et al., 1987) 179

10-5. Logistic curve fit to POD data versus crack size for near-side thermal fatigue cracks in wrought stainless steel material (Doctor et al., 1987) 179

10-6. Relationship of flaw detection and false call capabilities for (a) successful and (b) unsuccessful candidates for inspection of austenitic piping (Ammirato and Becker, 1998) 181

10-7. Typical weld locations in the core shroud 182

LIST OF TABLES

1-1. BWR types 4

1-2. Listing of domestic BWRs by commercial start date 5

2-1. System variations in BWR plants 42

3-1. BWRVIP susceptibility rankings and core shroud inspection recommendations 57

4-1. History of IGSCC in other BWR reactor vessel internals 62

4-2. Reactor vessel internals that have experienced IASCC 64

4-3. Aging management 65

5-1. Licensing basis and design basis insights 88

5-2. Typical BWR/2 systems to be relied upon to mitigate initiating events 90

5-3. Typical BWR/3 systems to be relied upon to mitigate initiating events 91

5-4. Typical BWR/4 systems to be relied upon to mitigate initiating events 92

5-5. Typical BWR/5 systems to be relied upon to mitigate initiating events 93

5-6. Typical BWR/6 systems to be relied upon to mitigate initiating events 94

6-1. Potential failures of BWR in-vessel systems resulting from single or common mode failures of IGSCC-affected reactor internals 98

6-2. Potential failures of BWR in-vessel systems resulting from single or common mode failures of IGSCC-affected reactor internals excluding five major internals 99

6-3. Effects of single and common mode internal failures including cascading effects 101

6-4. BWR IGSCC-induced internals failure consequence assessments 106

7-1. BWR IGSCC-induced internals impact of CDF rankings 126

7-2. Risk matrix 141

8-1. Scenario screening 153

9-1. Seismic initiating frequencies 159

9-2. IGSCC damage in jet pumps 160

9-3. Potential targets from failed jet pump 164

9-4. Potential targets from failed jet pump after initial structural screening 165

9-5. Seismic evaluation 166

10-1. System failure probabailities for various seismic ground acceleration levels..... 184

10-2. Probability of seismic event with loss of ECCS function 185

EXECUTIVE SUMMARY

Background

General Design Criteria 2 and 4 require that commercial nuclear reactor structures, systems, and components important to safety be designed to withstand the effects of natural phenomena, such as earthquakes, and the effects of postulated accidents, such as loss-of-coolant accidents (LOCAs). Boiling Water Reactor (BWR) vessel internals components were originally believed to have been designed to accommodate these requirements. However, intergranular stress corrosion cracking (IGSCC) degradation has been observed in a number of BWR reactor internals components, many of which are important to plant safety.

Although IGSCC of reactor internals had been recognized for over 20 years, this phenomenon received increased attention, beginning when crack indications were reported at core shroud welds located in the beltline region of an overseas BWR in 1990. The core shroud is a stainless steel cylinder that is located inside the reactor pressure vessel. It serves both to provide lateral support to the reactor core and to direct the flow of water inside the reactor vessel, and is generally regarded as a component whose integrity is critical to maintaining core safety. The core shroud and several other reactor internals are relied upon to remain functional during and following design basis events to ensure (1) the integrity of the reactor coolant pressure boundary, (2) the capability to shut down the reactor and maintain it in a safe shutdown condition, and (3) the capability to prevent or mitigate the consequences of accidents that could result in potential off-site exposures comparable to 10CFR guidelines. Subsequently, in 1993, a visual inspection of a U.S. BWR core shroud revealed crack indications at several weld regions. In addition to the BWR core shroud degradation discussed above, other BWR reactor internals components, including shroud support access hole cover welds, jet pump hold-down beams, core spray systems, core shroud supports, core plates, and top guides, have also been experiencing IGSCC degradation over the years. A BWR Vessel and Internals Project (BWRVIP) group was created to assist the industry in managing vessel internals IGSCC, including developing inspection, mitigation, repair, and replacement methods.

Over the 25 years from 1974 to 1999, IGSCC degradation has been detected in at least 15 different BWR vessel internals components internationally. The number of different types of components that have experienced cracking has increased over the years, and is expected to continue to increase. To date, most of the safety concerns have been focused on core shroud degradation. However, it is recognized that a cascading failure or common mode failure of other reactor vessel internals could also have a significant effect on plant safety. While the near-term risk of this cracking has been judged by the Nuclear Regulatory Commission (NRC) staff to be acceptable, the magnitude of the long-term risk has not been fully evaluated. This report summarizes risk studies that were conducted to estimate the long-term risk associated with IGSCC of BWR vessel internals.

Objective and Scope

The objective of this report is to assess the potential consequences associated with the failure of IGSCC-susceptible BWR vessel internals components, both singly and in combination with the failures of others. Specific consideration was given to potential cascading and common mode effects on system performance stemming from cracking of core shrouds and other BWR reactor internals components when subjected to accident-loading conditions such as LOCAs and seismic events.

The objective of this report is not to describe in detail the extensive ongoing research investigating the causes of and material behavior associated with IGSCC. The NRC is investigating these aspects of the IGSCC problem in separate programs. Nor does this research task involve proposing inspection, mitigation, repair, or replacement efforts. These aspects are being addressed by industry groups. Rather, the focus of the investigation in this report is on the safety consequences of IGSCC-related failures and the resulting potential for core damage.

The only degradation mechanism considered in this report is IGSCC. This includes contributing stress corrosion cracking (SCC) mechanisms such as irradiation-assisted SCC (IASCC). It is recognized that other degradation mechanisms such as fatigue can act synergistically with IGSCC in that a crack which is initiated by IGSCC can propagate to failure from fatigue. However, this report assesses degradation only in those cases where IGSCC plays a major role.

Initial Assessment

To provide background information on IGSCC of BWR vessel internals, the differences in BWR types were studied, concentrating on the design features relevant to IGSCC cracking. The history of IGSCC cracking in core shrouds, as well as other reactor internals, was catalogued. Various assumptions were made in order to initiate the process of identifying failure scenarios. A list of possible consequence scenarios was developed in an attempt to cover a broad list of possible, but reasonable, situations that could result from IGSCC degradation of reactor vessel internals. Single failures, common mode failures, and cascading failures were evaluated. The potential for loose parts from IGSCC-degraded internals was incorporated into the development of every failed internal. A multi-step process was followed which ultimately generated four tables that describe the consequences of IGSCC-induced failures. This multi-step process incorporated which loadings were being considered and whether or not cascading effects were being considered.

Nearly 250 different and unique scenarios were identified. However, such a large number of scenarios meant that a significant amount of time could be spent trying to determine whether or not all of those scenarios are truly significant contributors to increasing the core damage frequency (CDF) or offsite dose risk to the public as a result of IGSCC-degraded internal(s) failure. Therefore, in order to reduce the number of scenarios to be considered for further detailed risk evaluation, a screening logic process was created that identified those aspects important to safety.

The screening logic was applied to all of the postulated internal failures. 148 scenarios were not eliminated by the screening logic. These scenarios were considered to be the scenarios that may be significant contributors to increasing the risk to the public with respect to BWR plant safety if IGSCC-induced failures occur to reactor vessel internals. The 148 failure scenarios were evaluated to qualitatively estimate the rank (high, medium, or low) of each with respect to their anticipated effect on the increase in CDF. In most cases, a high risk ranking was made.

Final Assessment

In addition to the large number (148) of accident scenarios to evaluate, there were many other difficulties in carrying out this program, such as:

(a) the large number of components and failure sequences

(b) the different types of BWRs

(c) the difficulty in estimating crack sizes and growth rates

(d) several disciplines are involved

(e) the limited number of available "good" probabilistic risk assessment (PRA) and thermal-hydraulic models

It was decided to narrow the research scope to provide a simplified, cost-effective approach. The following simplifications were used:

(a) select a single plant for study

(b) select a single component and probable failure locations for initial calculations

(c) perform minimal calculations and research; BWRVIP reports were reviewed extensively and the information gathered was incorporated into the project

(d) develop a methodology to introduce IGSCC-induced failures into an existing PRA which can then be applied to the failure of any BWR vessel internals component

(e) convert an existing TRAC-B model to a representative plant to determine flow characteristics

(f) estimate the failure probabilities and insert events associated with the failure of the selected component into an existing PRA, considering a single failure at the most likely locations, common mode failures, and cascading failure sequences

(g) use expert panels to critique methods, offer suggestions for approach, and help in estimating probabilities and uncertainties

The jet pump was the reactor internals component selected for initial study, as there has been recently discovered cracking in jet pump riser inlet welds and jet pump failure could lead to a variety of cascading failure sequences. To narrow the scope of the problem, the investigation was limited to a single BWR type (high-power BWR/4). A CDF increase of > 5 x 10^{-6} events/yr was chosen as the value representing a significant change in CDF.

The 148 accident scenarios identified were reduced to 49 by various screening assumptions, creating a more manageable number of scenarios to assess. Limited structural calculations using a finite element model of the BWR internals were used to estimate the failure potential for the components under the various loading conditions, first for jump pump components and then for the remaining reactor internals. These results, along with crack growth rate estimates, inspection crack detection probabilities, and PRA results were used to assess the risk associated with IGSCC-induced failures in BWR vessel internals.

Conclusions

The conclusions from the study are:

- IGSCC has been detected at many locations in BWR vessel internals.
- IGSCC cracking is expected to continue as the plants age.
- Consequently, the probability of developing IGSCC cracks in all safety-related reactor internals is assumed to be 1.
- With no inspection, monitoring, or repair, there are a number of BWR vessel internals, if severely degraded by IGSCC, that could fail either in a common mode or cascading manner, leading to an inability to insert rods or cool the core in the event of a severe internal or external event.
- With no credit for inspection, monitoring, and repair (no BWRVIP program), and a probability of significant cracks developing of 1, coupled with the initiating event frequencies and system failure frequencies in the PRA studied, an undesirable increase in the plant CDF (> 5×10^{-6} events/yr) is predicted.
- The BWRVIP submittals have been reviewed, independent confirmatory assessments and analyses have been performed, and probability estimates have been made for cascading events. The calculations and estimates in the documents submitted by the BWRVIP appear reasonable.
- With the current BWRVIP inspection, monitoring, and repair program, there is expected to be no significant increase in CDF (< 5×10^{-6} events/yr) caused by failures of BWR vessel internals. That is, IGSCC problems can be identified and evaluated or corrected, to preclude a significant increase in the CDF.

- While this risk study was performed for a BWR/4 plant, the results should be applicable to all BWRs since the inspection and repair methods are generally the same for all types.

In conclusion, the BWRVIP program of IGSCC aging management of BWR vessel internals, including inspection, monitoring, and repair, along with NRC/NRR review of the BWRVIP activities, creates an atmosphere of acceptable risk for continued BWR operation.

ACKNOWLEDGMENTS

Joel Page and T.Y. Chang of the NRC Office of Nuclear Reactor Research (RES) were the NRC Program Managers for the project, and directed both the technical and program management portions of the program. Harold Vandermolen and Mike McNeil of NRC RES and Gene Carpenter and Kerri Kavanagh of the NRC Office of Nuclear Regulatory Research (NRR) also provided information and comments that supplemented the information used in preparing this report.

The authors also wish to acknowledge Curtis Smith and Dana Kelly of the INEEL who developed the qualitative risk rankings of the scenarios. Tom Clark, Dick Rahl, Vik Shah, and Mike Calley of the INEEL provided analysis and evaluation for the project. Members of the General Electric and NRC/NRR staffs provided much of the background information contained in this report and were very helpful in answering our questions. The staff of the Philadelphia Electric Company provided drawings needed to complete the structural analyses.

Drs. Bob Kennedy of RPK Structural Mechanics Consulting, Inc., and Bob Budnitz of Future Resources Associates, Inc., served on the PRA advisory panel. Professors Gary Was of the University of Michigan and Roger Staehle of the University of Minnesota served on the Materials Advisory Panel.

ACRONYMS

ABB	ASEA/Brown Boveri
ASME	American Society of Mechanical Engineers
ASP	accident sequence precursor
ATWS	anticipated transient without scram
ADS	automatic depressurization system
BWR	boiling water reactor
BWROG	BWR owner's group
BWRVIP	BWR vessel and internals project
CDF	core damage frequency
CFR	Code of Federal Regulations
ComEd	Commonwealth Edison
CP&L	Carolina Power and Light Company
CPR	critical power ratio
CRD	control rod drive
CRDH	control rod drive hydraulic
CRDM	control rod drive mechanism
dP	differential pressure
ECC	emergency core cooling
ECCS	emergency core cooling system
ECP	electrochemical potential
EPRI	Electric Power Research Institute
ET, ECT	eddy current testing
FAC	flow assisted corrosion
FW	feedwater
FWCI	feedwater coolant injection

FWLB	feedwater line break
GE	General Electric
GL	Generic Letter (NRC document)
GMAW	gas metal arc welding
GTAW	gas tungsten arc welding
HAZ	heat-affected zone
HPCI	high pressure coolant injection
HPCS	high pressure core spray
HTA	high temperature anneal
HWC	hydrogen water chemistry
IASCC	irradiation-assisted stress corrosion cracking
IC	isolation condenser
IE	Inspection and Enforcement (NRC Office)
IGSCC	intergranular stress corrosion cracking
IN	information notice
INEEL	Idaho National Engineering and Environmental Laboratory
IPE	individual plant examination
IPEEE	individual plant examination for external events
IRM	intermediate range monitor
KKM	Kernkraftwerk Muehleberg (BWR plant in Switzerland)
LERF	large early release frequency
LBB	leak before break
LLNL	Lawrence Livermore National Laboratory
LOCA	loss-of-coolant accident
LPCI	low pressure coolant injection
LPCS	low pressure core spray

LPRM	local power range monitor
MANBC	maximum allowable number of completely blocked coolant pathways before fuel damage is anticipated
MANNF	maximum allowable number of control rods / control rod drives that can be inoperable before scram is not achievable
MPR	MPR Associates, Inc.
MSIV	main stream isolation valve
MSLB	main steam line break
NRC	Nuclear Regulatory Commission
OD	outer diameter
PDI	performance demonstration initiative
POD	probability of detection
PNNL	Pacific Northwest National Laboratory
ppb	parts per billion
PRA	probabilistic risk assessment
RCIC	reactor core isolation cooling
RG	regulatory guide
RHR	residual heat removal
RICSIL	rapid information communication services information letter (GE document)
RIM	reactor internals management (GE program)
RLB	recirculation line break
RPS	reactor protection system
RPV	reactor pressure vessel
RV	reactor vessel
RWCU	reactor water clean up
SAW	submerged arc welding
SCC	stress corrosion cracking

SCS	shutdown cooling system
SER	safety evaluation report
SIL	services information letter (GE document)
SLC	standby liquid control
SMAW	shielded metal arc welding
SRM	source range monitor
SS	stainless steel
SSC	structures, systems, and components
SSE	safe shutdown earthquake
UFSAR	updated final safety analysis report
UHS	ultimate heat sink
U.S.	United States
USNRC	United States Nuclear Regulatory Commission
UT	ultrasonic testing
VT	visual testing

EVALUATION OF RISK ASSOCIATED WITH INTERGRANULAR STRESS CORROSION CRACKING IN BOILING WATER REACTOR INTERNALS[a]

1. INTRODUCTION

General Design Criteria 2 and 4 require that commercial nuclear reactor structures, systems, and components important to safety be designed to withstand the effects of natural phenomena, such as earthquakes, and the effects of postulated accidents, such as loss-of-coolant accidents (LOCAs). Boiling Water Reactor (BWR) vessel internals components were originally believed to have been designed to accommodate these requirements. However, intergranular stress corrosion cracking (IGSCC) degradation has been observed in a number of BWR reactor internals components, many of which are important to plant safety.

Although IGSCC of reactor internals had been recognized for over 20 years, this phenomenon received increased attention, beginning when crack indications were reported at core shroud welds located in the beltline region of an overseas BWR in 1990. The core shroud is a stainless steel cylinder that is located inside the reactor pressure vessel (RPV). It serves both to provide lateral support to the reactor core and to direct the flow of water inside the reactor vessel, and is generally regarded as a component whose integrity is critical to maintaining core safety. The core shroud and several other reactor internals are relied upon to remain functional during and following design basis events to ensure (1) the integrity of the reactor coolant pressure boundary, (2) the capability to shut down the reactor and maintain it in a safe shutdown condition, and (3) the capability to prevent or mitigate the consequences of accidents that could result in potential off-site exposures comparable to 10CFR guidelines. In response, General Electric (GE) issued Rapid Information Communication Services Information Letter (RICSIL) 054, "Core Support Shroud Crack Indications" (GE, 1990), to all owners of GE BWRs. Subsequently, in 1993, a visual inspection of a U.S. BWR core shroud revealed crack indications at several weld regions. Based on these results, GE issued Revision 1 to RICSIL 054, updating the information previously provided and recommending that owners of all GE BWRs perform visual examinations of accessible areas of the shrouds at the next upcoming refueling outages. Subsequently, the United States Nuclear Regulatory Commission (USNRC or NRC) issued Information Notice (IN) 93-79, "Core Shroud Cracking at Beltline Region Welds in Boiling Water Reactors" (USNRC, 1993a) and IN 94-42, "Cracking in the Lower Region of the Core Shroud in Boiling Water Reactors," (USNRC, 1994a), and Generic Letter (GL) 94-03, "Intergranular Stress Corrosion Cracking of Core Shrouds in Boiling Water Reactors," (USNRC, 1994b).

In addition to the BWR core shroud degradation discussed above, other BWR reactor internals components shown in Figure 1-1, including shroud support access hole cover welds, jet pump hold-down beams, core spray systems, core shroud supports, core plates, and top guides, have also been experiencing IGSCC degradation over the years. These instances have for the most part been sporadic, were not believed to be of major safety importance, and were addressed by GE through Services Information

---

a. Work sponsored by the United States Nuclear Regulatory Commission, Office of Nuclear Regulatory Research, Division of Engineering, Washington, D.C. 20555-0111, under DOE Contract DE-AC07-99ID13727; Joel D. Page and T.Y. Chang, USNRC Technical Monitors.

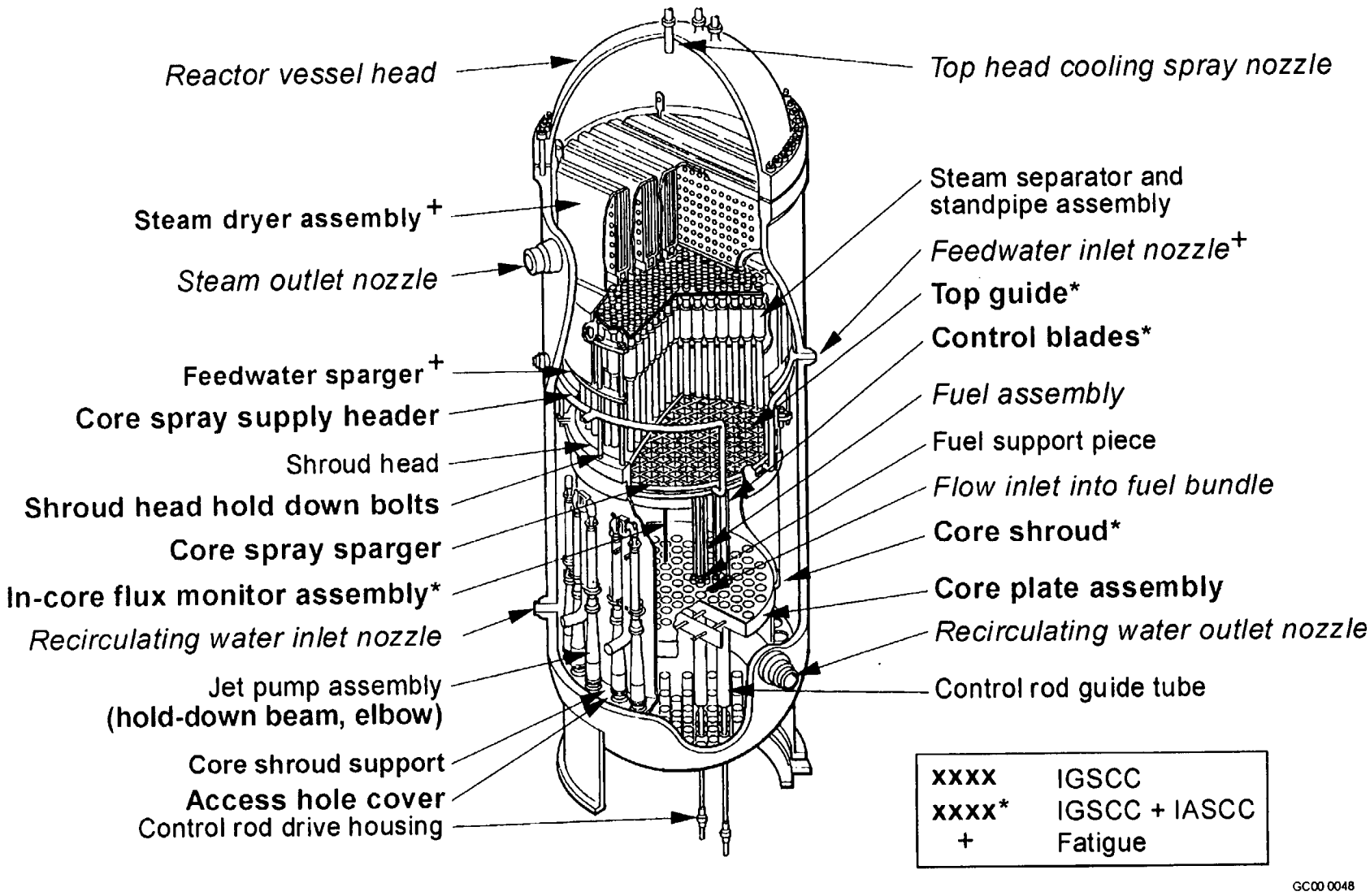

Figure 1-1. BWR reactor internal components that have experienced IGSCC damage.

Letters (SILs) and by the NRC through Information Notices and Bulletins that have been issued from time-to-time since about 1980. Some of the more recent NRC notices addressing components other than the core shroud are IN 92-57, "Radial Cracking of Shroud Support Access Hole Cover Welds" (USNRC, 1992), IN 93-101, "Jet Pump Hold-Down Beam Failure" (USNRC, 1993b), IN 95-17, "Reactor Vessel Top Guide and Core Plate Cracking" (USNRC, 1995) and IN 97-02 "Cracks Found in Jet Pump Riser Assembly or Boiling Water Reactors." However, the recent instances of core shroud cracking served to escalate attention to the seriousness of the IGSCC problem in BWR reactor internals. A BWR Vessel and Internals Project (BWRVIP) group was created to assist the industry in managing vessel internals IGSCC, including developing inspection, mitigation, repair, and replacement methods.

IGSCC degradation in a wide variety of components in various types of both domestic and overseas BWRs has raised a concern that common mode or cascading combinations of BWR reactor internals failures might possibly pose an undue risk. The research task which is the subject of this report represents an initial step by the NRC to evaluate the possible safety consequences and risks associated with IGSCC of BWR reactor internals.

1.1 Objective and Scope

The objective of this report is to assess the potential consequences associated with the failure of IGSCC-susceptible BWR vessel internals components, both singly and in combination with the failures of others. Specific consideration is given to potential cascading and common mode effects on system performance stemming from cracking of core shrouds and other BWR reactor internals components when subjected to accident-loading conditions such as LOCAs and seismic events.

The objective of this report is not to describe in detail the extensive ongoing research investigating the causes of and material behavior associated with IGSCC. The causes and contributing factors are briefly mentioned in Sections 1.2 and 1.3, respectively. The NRC is investigating these aspects of the IGSCC problem in separate programs. Nor does this research task involve proposing inspection, mitigation, repair, or replacement efforts. These aspects are being addressed by industry groups. Rather, the focus of the investigation in this report is on the safety consequences of IGSCC-related failures and the resulting potential for core damage.

The only degradation mechanism considered in this report is IGSCC. This includes contributing stress corrosion cracking (SCC) mechanisms such as irradiation-assisted SCC (IASCC), which is discussed in Section 1.3. It is recognized that other degradation mechanisms such as fatigue can act synergistically with IGSCC in that a crack which is initiated by IGSCC can propagate to failure from fatigue. However, this report assesses degradation only in those cases where IGSCC plays a major role.

There are five types of BWRs currently operating in the U.S., designated BWR/2 through BWR/6. These are listed in Table 1-1. Table 1-2 provides additional information for each BWR plant. The table is listed by the order of each unit's start date. Most of the tables in this report that provide information on domestic BWRs are listed in this order.

1.2 Causes of IGSCC

The three basic elements that must *all* be present for IGSCC to occur are:

- susceptible material
- a chemically aggressive environment
- a high tensile stress

Table 1-1. BWR types.

Plant	BWR Type	Total Number
Nine Mile Point 1	2	2
Oyster Creek	2	—
Dresden 2, 3	3	7
Millstone 1	3	—
Monticello	3	—
Pilgrim	3	—
Quad Cities 1, 2	3	—
Browns Ferry 1,2,3	4	19
Brunswick 1,2	4	—
Cooper	4	—
Duane Arnold	4	—
Fermi 2	4	—
FitzPatrick	4	—
Hatch 1,2	4	—
Hope Creek	4	—
Limerick 1,2	4	—
Peach Bottom 2,3	4	—
Susquehanna 1,2	4	—
Vermont Yankee	4	—
LaSalle 1,2	5	4
Nine Mile Point 2	5	—
WNP 2	5	—
Clinton	6	4
Grand Gulf	6	—
Perry	6	—
River Bend	6	—
	Total domestic BWR units	36

Table 1-2. Listing of domestic BWRs by commercial start date.

Plant Name	Reactor Type	Containment Design	Net MWe[a]	Commercial Start Date[a]
Nine Mile Point 1	BWR/2	Mark I	610	12/69
Oyster Creek	BWR/2	Mark I	610	12/69
Dresden 2	BWR/3	Mark I	794	6/70
Millsonte 1	BWR/3	Mark I	660	3/71
Monticello	BWR/3	Mark I	536	6/71
Dresden 3	BWR/3	Mark I	794	11/71
Vermont Yankee	BWR/4	Mark I	504	11/72
Pilgrim	BWR/3	Mark I	670	12/72
Quad Cities 1	BWR/3	Mark I	789	2/73
Quad Cities 2	BWR/3	Mark I	789	3/73
Cooper	BWR/4	Mark I	764	7/74
Peach Bottom 2	BWR/4	Mark I	1100	7/74
Browns Ferry 1	BWR/4	Mark I	1065	8/74
Peach Bottom 3	BWR/4	Mark I	1100	12/74
Duane Arnold	BWR/4	Mark I	538	2/75
Browns Ferry 2	BWR/4	Mark I	1065	3/75
FitzPatrick	BWR/4	Mark I	780	7/75
Brunswick 2	BWR/4	Mark I	754	11/75
Hatch 1	BWR/4	Mark I	741	12/75
Browns Ferry 3	BWR/4	Mark I	1065	3/77
Brunswick 1	BWR/4	Mark I	767	3/77
Hatch 2	BWR/4	Mark I	761	9/79
Susquehanna 1	BWR/4	Mark II	1032	6/83
LaSalle 1	BWR/5	Mark II	1078	1/84
LaSalle 2	BWR/5	Mark II	1078	10/84
WNP 2	BWR/5	Mark II	1112	12/84
Susquehanna 2	BWR/4	Mark II	1091	2/85
Grand Gulf	BWR/6	Mark III	1142	7/85
Limerick 1	BWR/4	Mark II	1055	2/86
River Bend	BWR/6	Mark III	936	6/86
Hope Creek	BWR/4	Mark I	1031	12/86
Clinton	BWR/6	Mark III	930	4/87
Perry	BWR/6	Mark III	1205	11/87
Fermi 2	BWR/4	Mark I	1085	1/88
Nine Mile Point 2	BWR/5	Mark II	1080	4/88
Limerick 2	BWR/4	Mark II	1055	1/90

a. Data from "World List of Nuclear Power Plants," Nuclear News, September 1994.

Under normal circumstances, the stress must be equal to or greater than the yield stress of annealed material, which can occur at locations such as weld heat-affected zones where residual stresses are present. However, if certain other factors, discussed in Section 1.3, are present, the conditions for the three basic elements listed above (such as the need for the tensile stress to be above the yield stress), may be somewhat altered.

1.2.1 Material

Types 304 and 316 stainless steels are IGSCC-susceptible materials. Type 304 stainless steels contain alloying elements of 18% chromium and 8% nickel, and Type 316 stainless steels contain 16% chromium, 12% nickel, and 2% molybdenum. The chromium would normally make the steels highly resistant to SCC. However, certain heat treatments and welding processes can cause formation of chromium carbides and result in chromium depletion at the grain boundaries, and the intergranular area becomes susceptible to IGSCC. Similarly, Alloy 600[b], which is a nickel-based material, also experiences chromium depletion at grain boundaries and becomes susceptible to stress corrosion cracking (Briant et al., 1986).

Sensitization,[c] caused by certain welding processes, can similarly promote IGSCC. This phenomenon occurs when the material is exposed to temperatures between about 550 to 850°C (1020 to 1560°F) for short periods of time. The critical time frame is only a few minutes at 700°C (1290°F) for Type 304 stainless steel, and about 30 minutes at 750°C (1382°F) for Type 316 stainless steel. However, the time is slower for Type 316L stainless steel, and this material is generally considered resistant to sensitization.[d] Sensitization usually occurs in the heat-affected zones of welds. The heat from the welding depletes chromium from the grain boundaries and once the chromium level falls below about 12%, the material becomes sensitized and susceptible to IGSCC. The lower the carbon content, the less the susceptibility for sensitization. Less than 0.035% carbon is considered a good content for significantly reducing the IGSCC potential.

Alloy X-750 is an age-hardenable, nickel-based, material, which becomes susceptible to IGSCC under certain heat treatments. However this material becomes susceptible because of the lack of grain boundary carbides. Early jet pump hold-down beams, which are made of Alloy X-750, were solution annealed at lower temperatures [885°C (1625°F) for 24 hr], followed by thermal aging [704°C (1300°F) for 24 hr], and then by air cooling. The heat treatment resulted in an absence of chromium carbide ($Cr_{23}C_6$) at the grain boundaries and made the material susceptible to IGSCC. Hold-down beams in later BWRs were solution annealed at a higher temperature [1093°C (2000°F) for 1 hr], followed by thermal aging at 704°C (1300°F) for 24 hr, then cooled. The revised heat treatment resulted in chromium carbides at the grain boundaries, making the material less IGSCC-susceptible.

1.2.2 Environment

During normal operation, the BWR coolant is at a temperature of about 288°C (550°F), and contains 200 parts per billion (ppb) dissolved oxygen and other oxidizing products resulting from the

---

b. Alloy 600 is often referred to as Inconel 600, but since Inconel is a trade name for the International Nickel Company, it is not used in this report.

c. Chromium carbide formation with the resulting chromium depletion is called sensitization.

d. However, IGSCC of Type 316L low-carbon stainless steel jet pump inlet riser safe ends was reported in 1984. The material was not sensitized and the cracks were found in both creviced and non-creviced locations. The non-creviced site had been cold worked.

radiolytic decomposition of the coolant, as well as various levels of ionic impurities. The products of the radiolytic decomposition include oxygen (O_2), hydrogen peroxide (H_2O_2), and small amounts of water, hydrogen, and hydroxide ions. The relative concentrations of these products determine the degree of aggressiveness of the coolant, and thereby the rate of IGSCC formation. Although the normal oxygen content in the BWR coolant is a few hundred ppb, the oxygen concentration may approach 8000 ppb during startup if air ingress takes place.

1.2.3 Stress

The third contributing factor is a high tensile stress. With no other contributing factors, such as discussed in the following section, the localized stress must be at or above the yield stress of annealed material to initiate IGSCC. In general, the higher the applied stress, the less time it takes for IGSCC to initiate.

Welding and fitup stresses can be in excess of the material yield stress. Operating stresses and bolt preloads also contribute to the stress state. Locations of stress concentration, such as thread or holes, can intensify the stresses.

1.3 Factors that Enhance IGSCC

In addition to the three major causes of IGSCC listed in Section 1.2, there are other related factors that can promote IGSCC, such as:

- high ECP and coolant conductivity (above a threshold of about 0.3 μS/cm)
- the presence of crevices
- cold work (above a threshold of about 20%).
- neutron irradiation (above a cumulative neutron threshold of about 5×10^{20} n/cm^2)

1.3.1 ECP and Conductivity

Two environmental parameters that control IGSCC are the electrochemical potential (ECP) of the material and the conductivity of the coolant. The ECP is a measure of the oxidizing power of the coolant, and the conductivity is a measure of the ionic impurity concentration in the coolant. Higher ECP and coolant conductivity levels promote the reaction rate of IGSCC. Based on laboratory tests, the Electric Power Research Institute (EPRI) (Jones and Nelson, 1990) has reported that IGSCC is suppressed at:

- dissolved oxygen levels below about 20 ppb[e], which is equivalent to a stainless steel ECP of about -0.23 volts
- ionic impurities below about 0.3 μS/cm

Other research (Brown and Gordon, 1987) has shown that IGSCC of neutron monitor dry tubes and shroud head bolts have a threshold of 0.25 μS/cm average coolant conductivity measured by on-line monitors.

e. The average oxygen concentration in a BWR core without hydrogen water chemistry is greater than 100 ppb.

1.3.2 Crevices

Crevices may be introduced by certain design features of a component such as holes, lap joints, bolted connections, or welds. The crevices are wide enough to permit fluid entry, but sufficiently narrow to maintain a stagnant zone. Initially, depletion of oxygen takes place within a crevice and excessive positive charge is produced because of continuous metal dissolution. The positive charge is balanced by migration of chloride ions from the bulk fluid into the crevice. This results in a severe acidic condition in the crevice; a pH value of as low as 2 to 3 may be present in the crevice. This will break down the protective film on the metal surface, which then becomes susceptible to stress corrosion cracking (Fontana, 1976).

1.3.3 Neutron Radiation

Fast neutron fluence (> 1 MeV) can cause IGSCC in unsensitized austenitic stainless steel and Alloy 600 components, even when the stresses are low. This stress corrosion cracking mechanism is called irradiation-assisted stress corrosion cracking (IASCC). It appears that IASCC does not appear until a certain cumulative neutron fluence is reached. The exact value of the threshold depends on factors such as material, stress level, geometry, and environment. The threshold is generally reported to be in the range 5×10^{20} to 5×10^{21} n/cm^2. The neutron flux enhances the segregation of impurities such as silicon and phosphorous to the grain boundaries. The presence of these impurities results in a localized area of increased susceptibility. Failures have occurred in components with very little applied stress.

1.3.4 Cold Work

The surfaces of reactor internals can be cold worked during manufacture by operations such as severe grinding. Cold working above about 20% (reduction in thickness) is considered the threshold for introducing increased IGSCC susceptibility. At this degree of cold working, IGSCC can occur even if the localized stress is below the yield stress. The cold working introduces a high concentration of dislocations which make the surface more reactive. It also can accelerate carbide precipitation, and can induce martensite, which also promotes IGSCC.

1.4 IGSCC Aging Management Methods

Aging management methods for IGSCC in BWRs can be categorically grouped as:

- inspection
- monitoring
- mitigation
- modification or repair
- replacement

The first two methods are used to assess the IGSCC problem. Inspection plans involve both visual and volumetric techniques. GE has developed individual methods for certain susceptible locations, and underwater cameras have been used extensively for visual examinations. For example, specialized equipment has been developed for inspection of the top guides, access hole covers, and in-core monitor housings. Eddy current testing has been used to inspect in-core monitor housings. Ultrasonic examinations are used to characterize IGSCC cracks in core shrouds. These inspections provide the basic information needed for making decisions about whether to repair or replace the degraded component, and give researchers field knowledge of IGSCC so that they can develop laboratory tests and propose initiation and growth models for IGSCC.

The basic American Society of Mechanical Engineers (ASME) Code inspection guidelines for reactor internals are presented in Table IWB-2500-1 of Section XI. However, since the Code requirements are inadequate for IGSCC detection in reactor internals, more extensive examination guidelines for each reactor internals component have been published by EPRI (EPRI, 1995).

SCC monitors can be used to estimate IGSCC crack growth. One such monitor places a self-loaded, double cantilever beam in the vicinity of the reactor internals, and a reversing direct electrical current is applied to permit remote measurement of crack growth (Ford, 1988). The specimen is of the same material as the component to be monitored, is in the same environment, and may contain an artificial crack.

The final three aging management methods are solutions to the problem. Mitigation techniques alter the three basic causes of IGSCC (the material, the environment, or the stress), or they may change the design so that crevices are removed from the susceptible location. The susceptibility of the material may be reduced by using a more corrosion-resistant composition such as 316L stainless steel, or by changing the heat treatment of the material. The material may be protected by coating the component with a corrosion-resistant substance. Noble metals are a candidate for such coatings, and could be applied either directly to new or replacement parts, or by injecting them into the coolant and allowing them to plate out on the exposed surfaces of existing reactor internals.

The potential for corrosion of the environment may be reduced by control of water chemistry to remove ionic impurities, and by the use of hydrogen water chemistry (HWC). Ionic impurities were discussed in Section 1.3.1. HWC involves injecting hydrogen into the feedwater to reduce the oxidizing products in the coolant (primarily O_2 and H_2O_2), and thus reduce the ECP of the stainless steel components. The hydrogen is injected through taps in the suction line leading to the condensate booster pump or to the main feedwater pumps. The amount of hydrogen injected depends on the plant design. Oxygen levels as low as 5 ppb are reported to have been achieved using HWC. Many plants are using HWC, and it is GE's goal that all BWR plants switch to HWC. The normal use of HWC does not provide adequate protection to internals. As compared to protection for recirculating piping, a significantly larger amount of hydrogen injection is need for vessel internals. There are several problems associated with such a large injection of hydrogen (see section 22.4.2 in Shah and MacDonald, 1993).

Stress levels have been reduced by making the cross-section of a component larger or by reducing preload forces, as has been achieved in the case of jet pump holddown beams. Components have been redesigned to eliminate crevices, as in the case of BWR/6 top guides.

A degraded component may be modified, repaired or replaced, either when it has degraded to the point such that the end of its safe, useful life has been reached, or as a preventative measure. GE has or is developing repair and/or replacement methods for many of the reactor internals. Some of these have been fully developed and implemented on smaller components, but techniques to replace some of the larger, more inaccessible components such as the core plate, await final development. Technology to remove a degraded core shroud by plasma cutting and then welding a new core shroud in its place has been developed in Japan.

1.5 Report Outline[f]

This introductory chapter describes the objective and scope of the report, and includes a brief description of the causes, contributing factors, and mitigation methods associated with IGSCC. Chapter 2

f. The mention of specific products and/or manufacturers in this document implies neither endorsement or preference, nor disapproval by the U.S. Government, any of its agencies, or the BBWI, of the use of a specific product for any purpose.

discusses the similarities and differences between the BWR/2 through BWR/6 designs, with particular attention to the internals.

Chapter 3 presents applicable documentation related to core shrouds, including BWR Owners Group (BWROG) and licensee-specific submittals, related NRC documentation including Safety Evaluation Reports (SERs), and other available published information. The current plan of action for core shroud modification of each potentially affected plant to address IGSCC degradation is documented. In many cases, the modification consists of shroud clamping devices.

The degradation history of IGSCC-aging-management plans for other reactor internals components, such as the top guide, core plate, and core spray system is described in Chapter 4. The current plans of action are documented for a representative sample of the potentially affected BWRs.

Available detailed information regarding which systems would be relied upon to mitigate the potential effects of single or multiple failures of IGSCC-affected reactor internals components are documented in Chapter 5. Typically, the initiating events are expected to be main steamline break (MSLB), feedwater line break (FWLB), recirculation line break (RLB), safe shutdown earthquake (SSE), MSLB plus SSE, FWLB plus SSE, RLB plus SSE, and possibly anticipated transient without scram (ATWS).

Various types of *systems* failures that could result from failures of IGSCC-degraded reactor internals are catalogued in Chapter 6. This includes the consideration of functional losses or significant degradations of certain inside-reactor vessel systems. A similar assessment for various types of *mechanistic* failure modes (i.e., the potential results of physical impacts/interactions, common mode, etc., between various reactor internals components due to failures and/or degradations of the components that are subject to IGSCC degradation), is described. This includes the various ways that these components might fail (i.e., possible accident scenarios) and how those types of failures might affect other components inside the reactor vessel. A table of 148 accident scenarios is presented.

A preliminary risk assessment deterministically developed, is presented in Chapter 7. Specific areas are described for each potential accident sequence where additional analyses are needed to provide a more definitive understanding of accident scenarios that involve either simultaneous (i.e., common mode) or cascading (i.e., sequentially caused by other failures). The scope includes both deterministic failure considerations and qualitative risk assessments.

In Chapter 8, the 148 accident scenarios developed in Chapter 6 were reduced to 49 by various assumptions, creating a more manageable number of scenarios to assess. A plan to reduce the scope by focusing only on a BWR/4 plant, and using limited calculations and expert panels is described.

Application of the methodology to jet pumps is presented in Chapter 9, and application to the remaining components is presented in Chapter 10. The findings are summarized in Chapter 11, and the references are listed in Chapter 12.

Appendix A lists BWR systems that are functional for mitigation under different conditions. The reports of expert panels used to assist in the project are included in Appendices B, C, and D. Results from Scientech TRAC-B calculations are included in Appendix E.

2. DESIGN SIMILARITY OF BWR INTERNALS

Over the years, various reactor design modifications were adopted by GE, the domestic BWR vendor. Currently, there are 36 BWR units operating in the U.S., excluding Big Rock Point. These 36 units include BWR reactor types BWR/2 through BWR/6. Figure 2-1 illustrates the major reactor vessel (RV) internal components for a BWR/2, of which there are two operating units. There are seven BWR/3 and 19 BWR/4 units currently operating, and Figure 2-2 illustrates the similarities of the reactor vessel internals used by these two reactor types. Finally, Figure 2-3 shows the similarities between the four BWR/5 and the four BWR/6 operating reactor units. Comparing these three figures show the major similarities of design between the reactor vessel internals of all 36 domestic BWR units.

BWR reactor vessel internals have been designed to perform numerous functions during their anticipated lifetime. The internals support and provide alignment for the nuclear core, direct the flow of coolant within the vessel cavity, separate the generated steam from the coolant, monitor core power and reactivity control, and provide various core cooling functions in case of a loss-of-coolant accident. This section describes reactor vessel internals and identifies the design similarities and the many variations that have evolved over the years.

2.1 General Design of BWR Internals

There are approximately 20 distinct types of components found inside the reactor vessel of a typical BWR, excluding the fuel assemblies. Reactor vessel nozzles are not considered internals. Since the fuel assemblies are periodically moved, inspected, and replaced, they are not grouped with the other internal components that are subject to IGSCC. The list of internals includes:

- In-core instrument housings and guide tubes
- Intermediate range monitor / source range monitor / local power range monitor instrumentation and dry tubes
- Neutron source holders
- Core dP and standby liquid control lines
- Control rod and drive assemblies
- Fuel supports
- Core shroud support
- Access hole covers
- Core plate
- Core shroud
- Core shroud head and bolts
- Guide rods

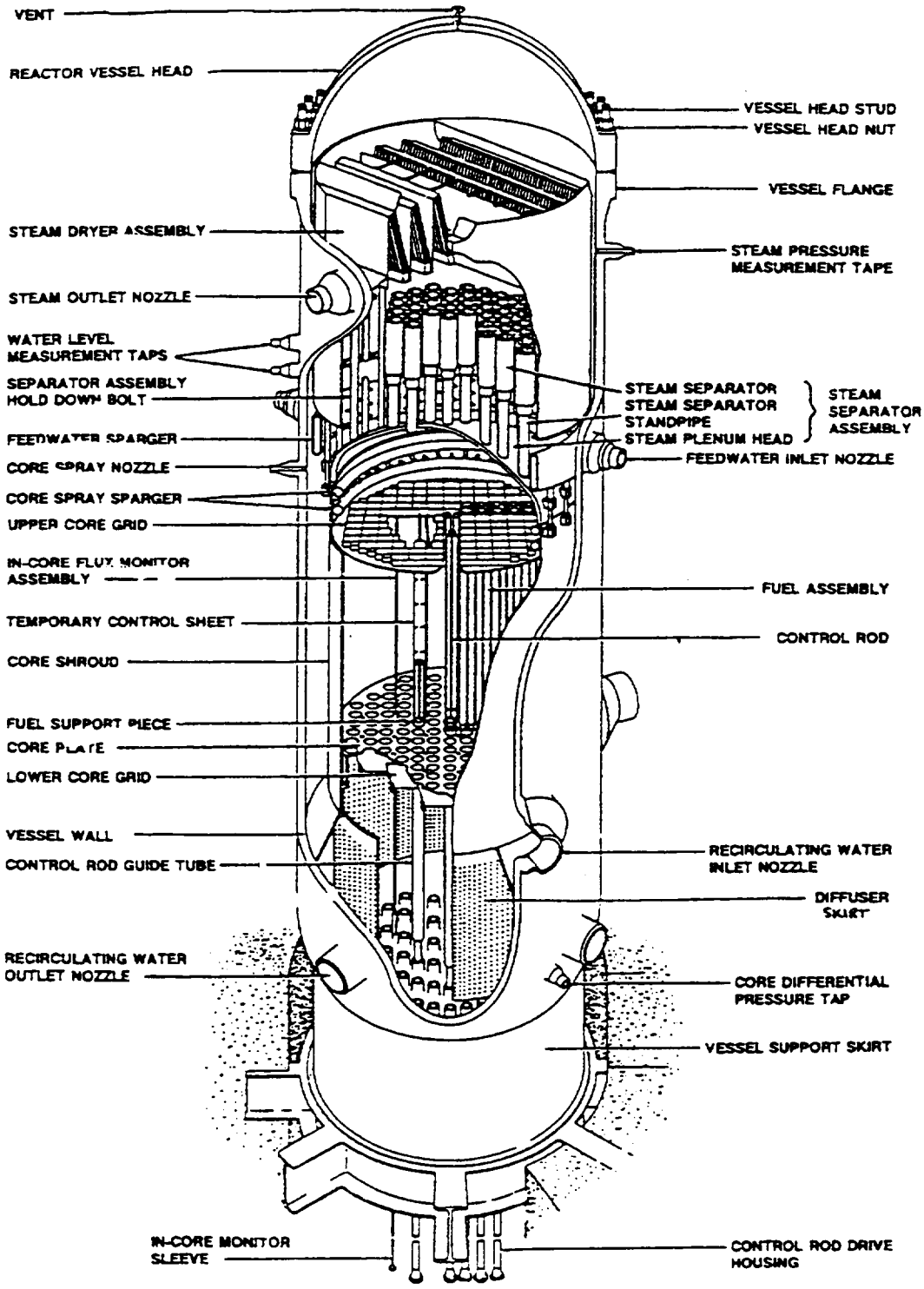

Figure 2-1. BWR/2 reactor vessel internals.

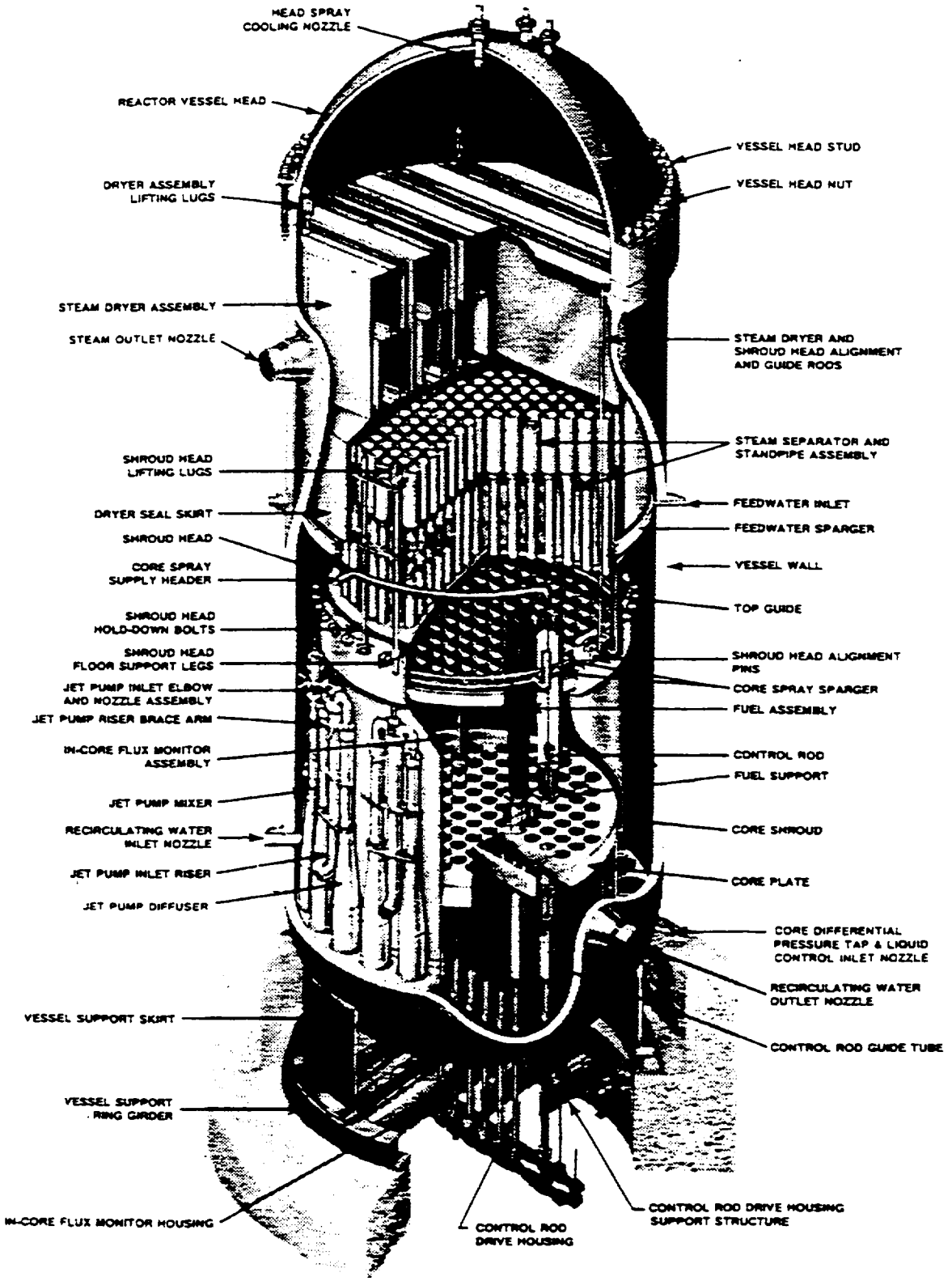

Figure 2-2. BWR/3 or BWR/4 reactor vessel internals.

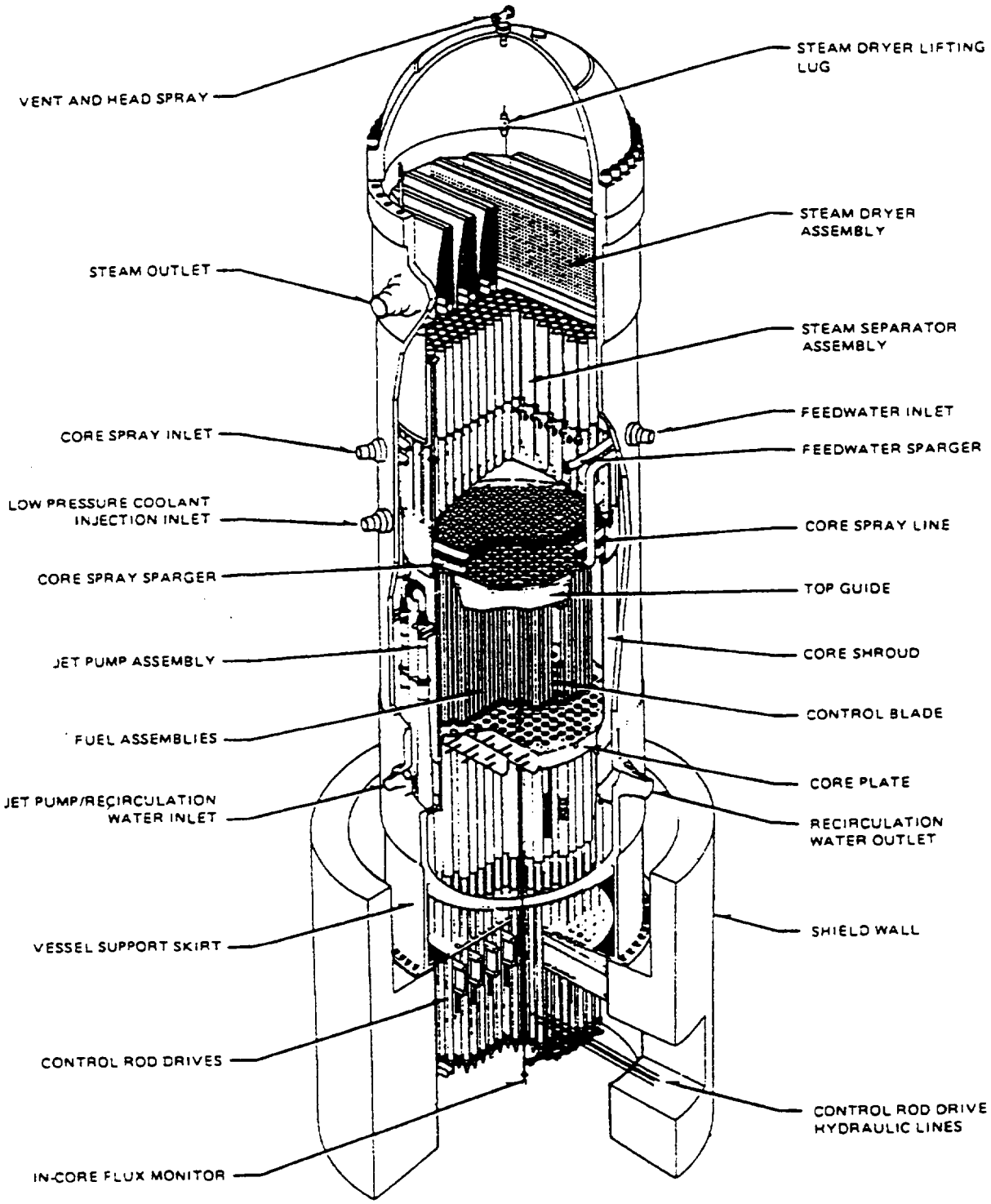

Figure 2-3. BWR/5 or BWR/6 reactor vessel internals.

- Top guide (or grid)
- Core spray assemblies
- Low pressure coolant injection assemblies
- Feedwater sparger
- Jet pump assemblies
- Steam separator and standpipes
- Steam dryer assemblies
- Head spray nozzle
- Surveillance specimen holders

Although the in-core instrument housings, control rod drive (CRD) housings, and the core shroud support are welded to the reactor vessel and can be considered part of the reactor vessel, GE has considered these three items as internals for its Reactor Internals Management (RIM) effort. Therefore, this report also considers these items as reactor vessel internals.

The subsections below provide general descriptions of the listed BWR internals. NRC's "Boiling Water Reactor Fundamentals Manual" (USNRC, 1979), NUREG/CR-5754 (Luk, 1993), and Ware (1993) provided information on internals descriptions, fabrication techniques, and typical materials used. In most cases, these descriptions addressed the original design. Many of the internals designs have remained basically the same for all BWR types. However, over the years, various modifications and changes have been made, such as upgrading control rod blades and routing the standby liquid control (SLC) system from the lower plenum area to the core spray or high pressure core spray (HPCS) lines.

2.1.1 In-core Instrument Housings and Guide Tubes

The in-core instrument housings penetrate the reactor vessel through the bottom head and are welded in place (see Figure 2-4). Typically, there are about 55 housing penetrations and each one is approximately 1 to 2 inches in diameter. The housings are typically made of Type 304 stainless steel.

A guide tube is welded to the top of each in-core instrument housing just above the bottom head (see Figure 2-4). That guide tube extends up through the core plate where it is laterally supported. A second tube (dry tube) containing the in-core instrumentation (Section 2.1.2) is then inserted through the housing and guide tubes. The guide tube is open to the coolant at its upper end. This stagnant fluid condition can cause IGSCC. The lower end of the housing is sealed and forms the reactor vessel pressure boundary. The housing and guide tubes protect the instrumentation tubing (dry tube) from flow-induced vibration loadings in the lower plenum below the core. The housings and guide tubes are safety-related components.

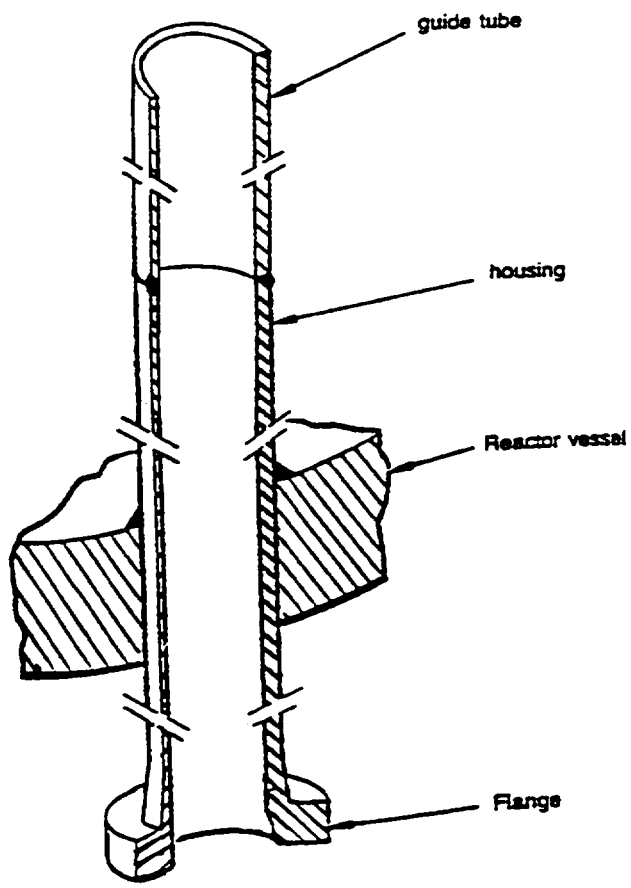

Figure 2-4. In-core instrumentation housing and guide tube.

2.1.2 IRM/SRM/LPRM Instrumentation and Dry Tubes

The instrumentation tubing (or dry tube) that houses the intermediate range monitor (IRM), the source range monitor (SRM), and the local power range monitors (LPRMs), is inserted through the housing and guide tubes (described above) and latches to the top guide for support (see Figure 2-5).

The IRM and SRM dry tubes contain instrumentation that monitor neutron flux. Typically, the SRM provides information during reactor startup and low power level operations. At about 1 percent of the rated power, the SRM chambers are fully withdrawn to a low flux position below the active core. From the 1 percent rated power level, the IRM measures neutron flux levels until 5 to 10 percent of the rated power level is achieved. Then, the IRM chambers are withdrawn to a low flux position below the active core. From this point on, power distribution monitoring is accomplished with the LPRMs. The LPRMs and dry tube assemblies are periodically replaced. The instrumentation and dry tubes are safety-related components.

2.1.3 Neutron Source Holders

During startup of the first operating fuel cycle, additional neutrons are required. Therefore, several antimony-beryllium start-up sources are positioned in the reactor core area. The holders for these neutron sources are cylindrical capsules whose upper end fits in a slot or pin in the top guide, and the lower end is

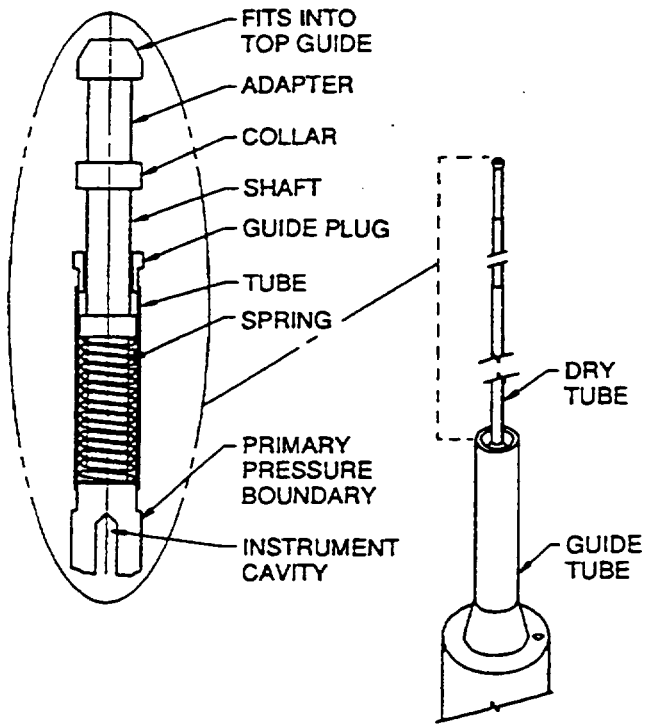

Figure 2-5. In-core instrumentation dry tube.

positioned in a hole in the lower core plate. Removal is easy and GE, with revision 1 of SIL 215 (GE, 1978), has recommended that the neutron source holders be removed after the first fuel cycle. The holders are typically made of Type 304 stainless steel. The neutron source holders are not safety-related components.

2.1.4 Core dP and SLC Lines

In many BWRs, a single differential pressure (dP) and SLC line enters the reactor vessel through the bottom head as two concentric pipes. The concentric pipes serve two functions: measuring the differential pressure across the core plate and, in the event the CRD system becomes inoperable, to shutdown the reactor from full power by injecting a neutron absorbing liquid solution (sodium pentaborate) into the core coolant. The two concentric pipes separate in the lower plenum beneath the core. The outer pipe terminates just above the core plate and senses pressure in a region outside of the fuel assemblies. The inner pipe tees off and ends with a perforated length of pipe below the core plate. With this dual design, pressure can be sensed below the core plate and, if necessary, the liquid control solution can be injected. Should injecting the cold liquid control solution become necessary, using the inner pipe reduces the thermal shock to the reactor vessel nozzle. During recirculation line breaks and other large loss-of-coolant accidents (LOCAs) in the bottom head area, the SLC system is not considered functional (GE, 1997).

In some BWR/5 and 6 plants, a separate line is used solely for the detection of differential pressures while the injection of liquid control solution has been routed to the high pressure core spray (HPCS) line. Limerick 1 and 2 (BWR/4s) are unique in that SLC has been routed to the core spray

piping. The single core dP line by itself is not a safety-related component but the SLC line and the concentric SLC/core dP lines together are considered safety-related components.

2.1.5 Control Rod and Drive Assemblies

Various parts of the control rod and drive assemblies are considered to be reactor vessel internals. Major components are the control blade (including the neutron absorbing material, sheathing, velocity limiter, coupling socket, and lock plug return spring), the index tube and coupling spud, and the CRD guide tube and housing, including the stub tube, if present. Figure 2-6 illustrates how the control rod assembly inside the reactor vessel is oriented and how it interfaces with the fuel assemblies.

The control rods enter from the bottom of the core and regulate the reactivity of the core by moving up or down within the active core. Upward movement reduces core activity while downward movement increases core activity because the control rod contains neutron absorbing materials, typically either boron carbide powder or hafnium. Power distribution shaping in the core can also be achieved by moving selected patterns of control rods. GE has indicated (GE, 1997) that about half of the control rods don't need to function (if uniformly distributed) in order to get a typical BWR plant to a cold shutdown status. If a significant number of inoperable control rods were grouped in a localized area, then the injection of SLC may be required in order to still achieve a cold shutdown condition. Otherwise, GE indicated that typical BWR plants can get to a hot shutdown condition with very few operable control rods.

The structural framework of a control blade consists of a top casting which incorporates the handle, a bottom casting which includes the velocity limiter and the coupling socket, a cruciform shaped center post containing the neutron absorbing material, and sheathing over the center post to form a housing that contains the neutron absorbing material. The control blade (Figure 2-7) is typically made of Type 304 stainless steel material and is a safety-related component. Control rods are routinely inspected and replaced at regular intervals.

The index tube and coupling spud are the drive components which move the control rod up and down. The bottom of the index tube originates in the control rod drive mechanism below the bottom head of the reactor vessel. It extends up through the CRD housing and contains the coupling spud at the top. The coupling spud has spring material fingers which are contoured to engage the coupling socket at the bottom of the control blade. The fingers compress to enter the coupling socket but expand once inserted. A locking plug falls between the fingers when they expand, locking the coupling spud to the control blade. If desired, the locking plug can be removed and the coupling spud withdrawn, allowing the control blade to be moved or replaced at regular intervals. The coupling spud is typically made of Alloy X-750 while the index tube is made of either XM-19 or Type 304 stainless steel. The index tube and the coupling spud are safety-related components.

The CRD housings and guide tubes are located below the core plate. The CRD housing penetrates the reactor vessel bottom head and is welded to either a separate stub tube or directly to the bottom head (Figure 2-8). Most BWR/6 plants have eliminated stub tubes but some BWR/6 plants still have stub tubes. If a stub tube is present, it is welded directly to the bottom head. The guide tube is attached to the top of the housing and extends through a hole in the core plate (Figure 2-9). The guide tube provides lateral guidance for the control rod during movement. A CRD thermal sleeve is inserted into the CRD housing from below and then rotated to lock the guide tube in place. The CRD housing and guide tube provide vertical support for the four-lobed fuel support piece which rests on top of the guide tube and the four fuel assemblies surrounding a control rod. The CRD housings and stub tubes are usually made of Type 304 stainless steel or Alloy 600 while the CRD guide tube is typically Type 304 stainless steel. The CRD stub tubes, housings, and guide tubes are safety-related components.

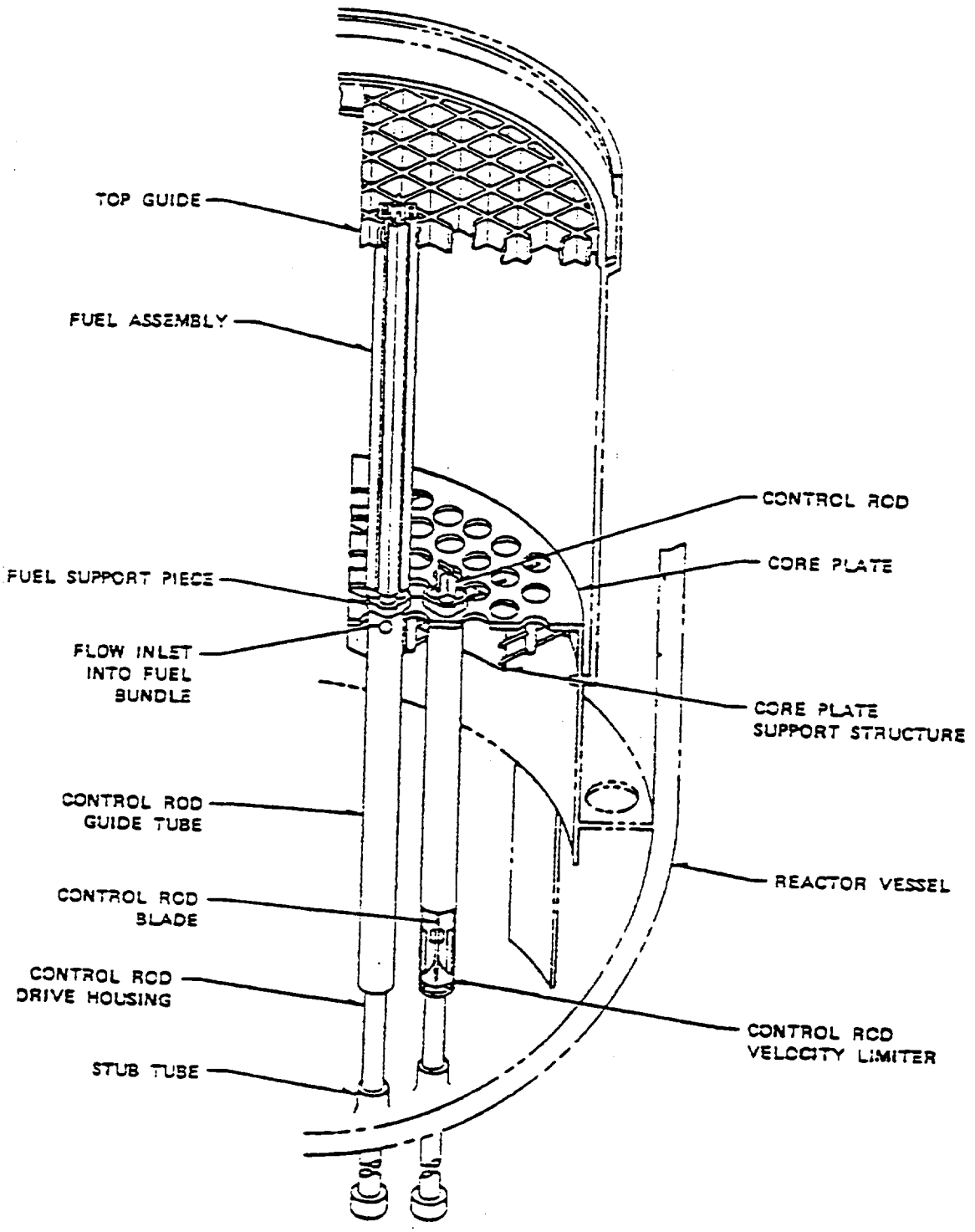

Figure 2-6. Typical control rod and drive assembly inside the reactor vessel.

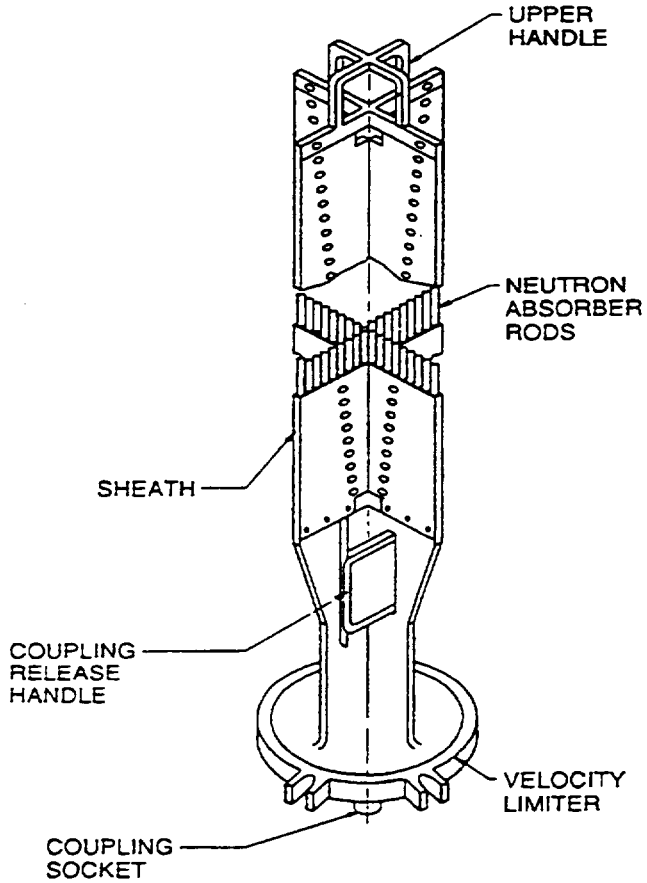

Figure 2-7. Control rod (blade).

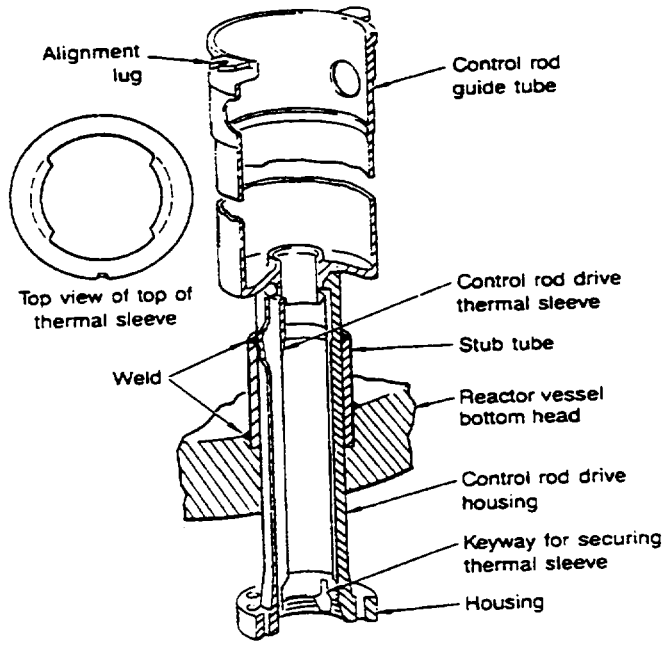

Figure 2-8. Typical control rod drive housing, stub tube, and guide tube arrangement.

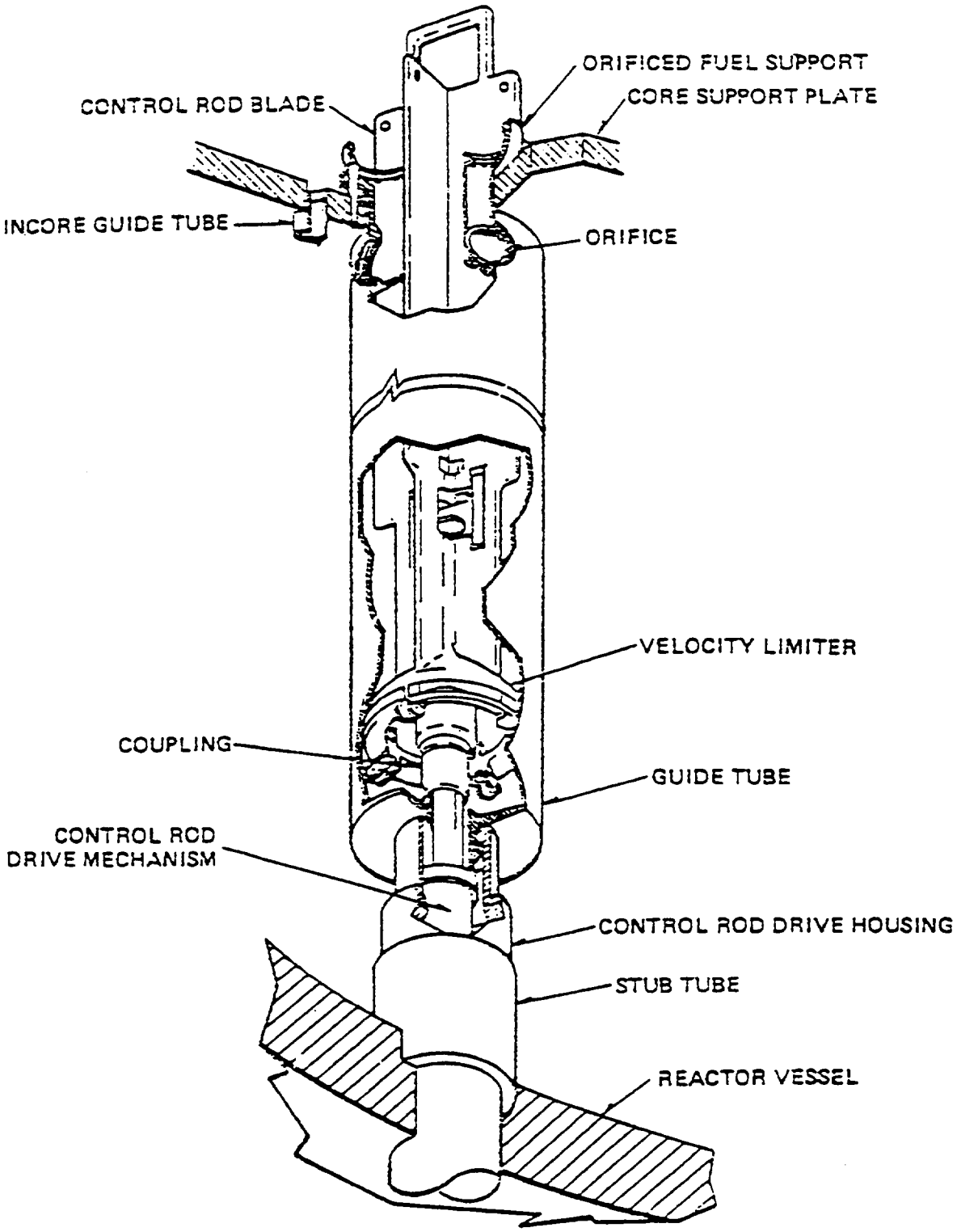

Figure 2-9. Control rod arrangement in lower plenum.

2.1.6 Fuel Supports

Fuel support pieces provide lateral support and alignment to the bottom end of fuel assemblies, support the weight of the fuel assemblies, and contain orifices to ensure proper coolant flow distribution to the individual fuel assemblies. There are two types of fuel support pieces, the four-lobed fuel support and the peripheral fuel support (Figure 2-10). The four-lobed fuel supports rest on top of the control rod guide tubes and support the weight of the four adjacent fuel assemblies (see Figure 2-8). These four-lobed fuel supports are removed when control rod blades are changed out. At that time, they are visually examined for adequacy. The peripheral fuel supports are located at the outer edge of the core and are used to support fuel assemblies not located adjacent to control rods. The peripheral fuel supports are typically welded to the core plate. Since they are welded in place, the peripheral fuel supports are not typically examined. Both fuel support types are made of either Type 304, 304L, or 316L cast stainless steel. These items are safety-related components.

2.1.7 Core Shroud Support

The core shroud support provides the vertical support for the core shroud and all of the other internals that attach to the shroud, including the jet pump diffusers, core plate, neutron sources, peripheral fuel supports, peripheral fuel assemblies, top guide, core shroud head and bolts, guide rods, core spray sparger, standpipes, and steam separators. In addition, the core shroud support isolates the annulus between the core shroud and the reactor vessel wall from the lower plenum. There are four different core shroud support designs in use at existing domestic BWRs.

For both of the BWR/2 plants, a conical skirt is welded to both the reactor vessel wall and the core shroud support ring which is welded to the lower portion of the core shroud. Attached to this support ring and hanging down is the diffuser or baffle skirt. It protects in-core and CRD housings and guide tubes from flow-induced vibrations created by coolant from the recirculation inlet nozzles. One of the two BWR/2 plants (Oyster Creek) has additional reinforcement brackets which provide a redundant load path across the weld connecting the conical skirt and the core shroud support ring.

For a majority of the remaining BWR/3 through 6 (26 total) units, a flat plate and column or pedestal support design was utilized. For this design, the core shroud support consists of a flat plate (sometimes called the baffle plate) welded to the reactor vessel wall and the core shroud support cylinder. The top of the vertical core shroud support cylinder is welded to the bottom of the core shroud. Vertically oriented plates or columns are then welded to the bottom of the core shroud support cylinder and to the bottom head of the reactor vessel. The number of vertical plates or columns vary between six to 14 and the spacing and widths of the plates or columns also vary between plants regardless of the BWR design type. This design provides for redundant support of the core shroud.

A third core shroud support design, implemented at seven BWR/3 through 5 units, consists of the flat plate welded across the annulus between the reactor vessel wall and the core shroud support cylinder. The top of the vertical core shroud support cylinder is welded to the bottom of the core shroud while the bottom of the core shroud support cylinder is welded to the flat plate. However, instead of vertical columns extending to the bottom head, 22 gusset plates have been welded between the flat plate and the reactor vessel wall. The flat plate and gussets are redundant structures.

Finally, a fourth core shroud support design has been utilized at only one BWR/4 unit and consists of a very thick (9 inch) flat plate, made of SCC resistant low alloy steel, and is welded across the annulus between the reactor vessel wall and the core shroud support cylinder. The top of the vertical core shroud support cylinder is welded to the bottom of the core shroud while the bottom of the core shroud support

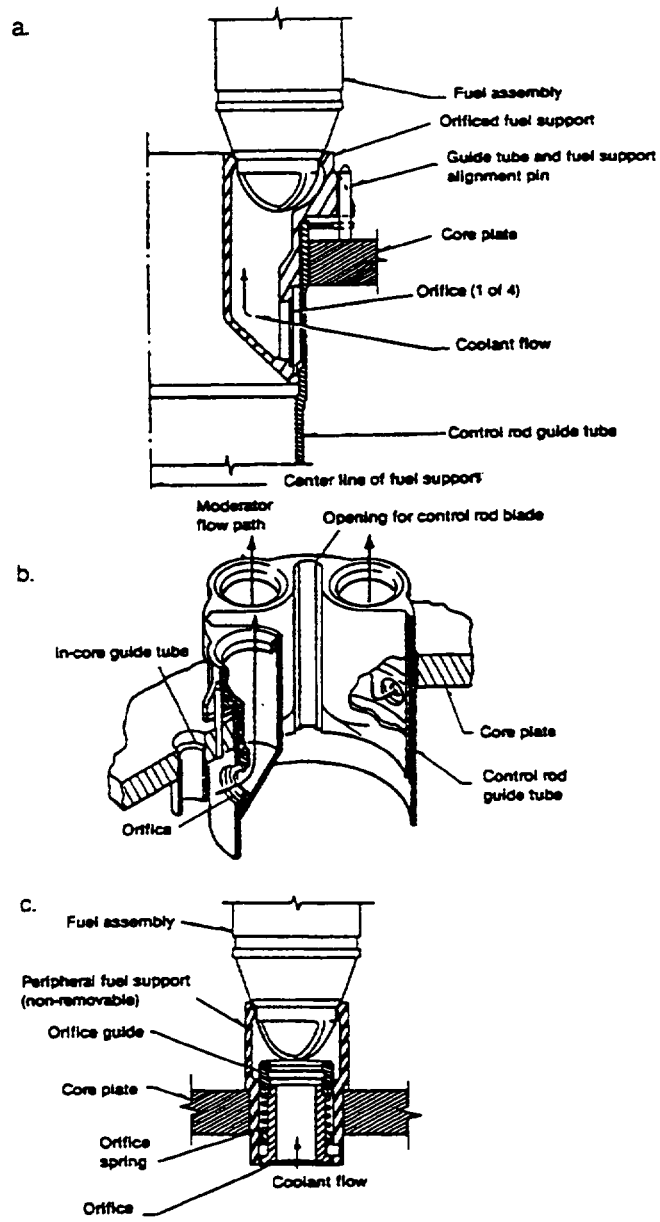

a. Four-lobed fuel support (cross section of one lobe).
b. Four-lobed fuel support.
c. Peripheral fuel support.

Figure 2-10. Four lobed and peripheral fuel support pieces.

cylinder is welded to the top of the flat plate. There are no redundant load paths for this single flat plate design.

Core shroud supports are typically made of Alloy 600 and weld material is usually either Alloy 82 or 182. Figure 2-11 illustrates this material usage for a typical BWR core shroud support. Core shroud supports are safety-related components.

2.1.8 Access Hole Covers

Excluding BWR/2 plants, two access holes, spaced 180 degrees apart, were provided in the flat core shroud support (or baffle) plate. Some BWR/6 plants have only one access hole. The access holes were utilized during construction. Prior to operation, the access holes were plugged by welding in cover plates. These cover plates maintain the barrier between the annulus and the lower plenum (Figure 2-12). The typical thickness of the cover plates range from 5/8-inch to 2-1/2 inches. The access hole covers are typically made of Alloy 600 except for the BWR/6 plants with a single access cover plate. These single hole covers are typically made of Type 316L stainless steel. Access hole cover plates are safety-related components.

2.1.9 Core Plate

The core plate is a circular, horizontal, plate with vertical stiffener plates welded underneath and is supported around the perimeter by a circular rim. The flat circular plate is welded to the rim as are the stiffener plates. Tie rods serve to cross-brace the stiffeners in all BWRs except for the BWR/6. In BWR/6 plants, additional grid support plates were utilized for stiffeners. For BWR/2 through BWR/5 plants, core plates are positioned using alignment pins and then the core plate is bolted to a ledge on the inside of the middle core shroud. BWR/6 plants do not have alignment pins but are restrained by wedges and the bolts. Figure 2-13 illustrates the typical placement of a core plate.

Perforations in the core plate provide access through and lateral support for the CRD and in-core instrumentation guide tubes and the startup neutron sources. All fuel support pieces are also held laterally in place and peripheral fuel supports are also vertically supported since they are welded in place.

The core plate directs the flow of coolant. In plants prior to the BWR/6, additional holes in the core plate existed to ensure adequate cooling was provided in the space between fuel channels. However, these additional holes caused flow-induced vibration problems with the in-core instrumentation. Therefore, the holes were plugged with core plate plugs and additional holes for coolant flow were added to the fuel bundles.

The core plate is typically made of Type 304 or 304L stainless steel and is a safety-related component.

2.1.10 Core Shroud

The core shroud is a Type 304 or 304L stainless steel cylinder which encompasses and provides lateral restraint to the core. Typical shroud dimensions are 14 to 17 feet in diameter with wall thicknesses of 1.5 to 2 inches. The core shroud is a safety-related component. It serves as a barrier between the downward flowing coolant in the annulus area between the reactor vessel and the shroud and the upward flowing coolant through the reactor core (Figure 2-14). It is fabricated from plate material with both circumferential and vertical welds. The actual number of circumferential and vertical welds vary between core shrouds on a plant-by-plant basis, depending on who was the fabricator. Each weld has been given a specific identifier. Circumferential (or horizontal) welds are indicated as H1, H2, H3, ... etc. whereas

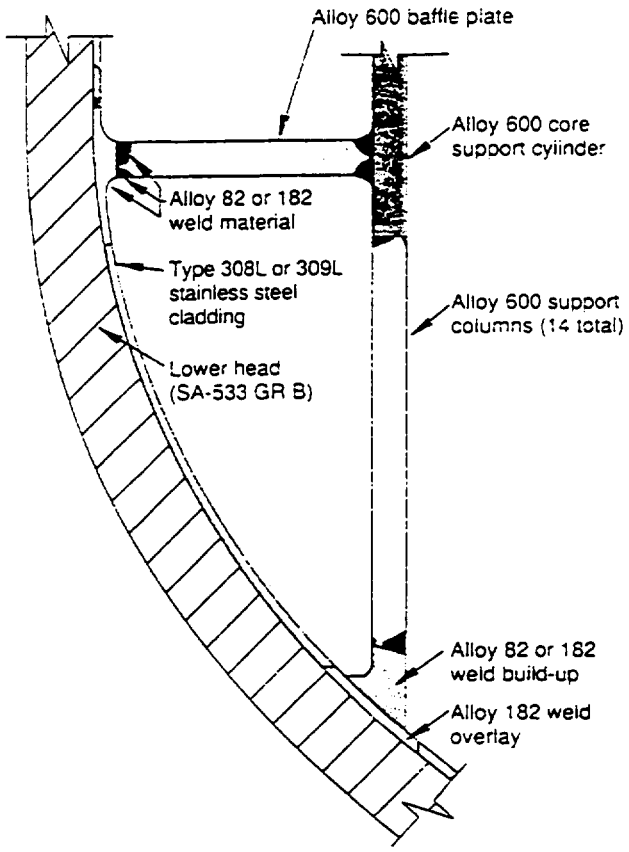

Figure 2-11. Typical core shroud support materials and weldments.

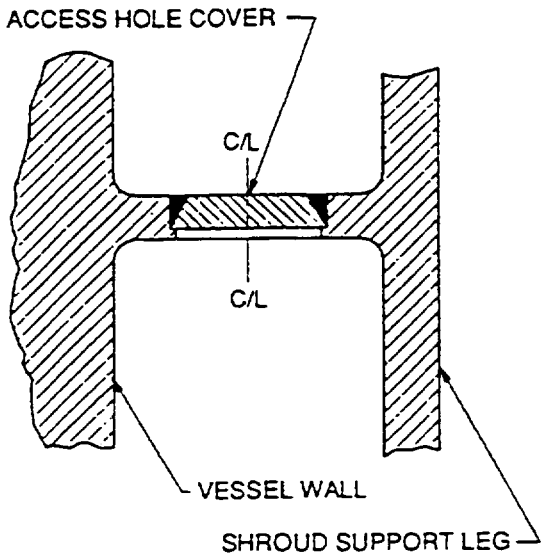

Figure 2-12. Access hole cover plate.

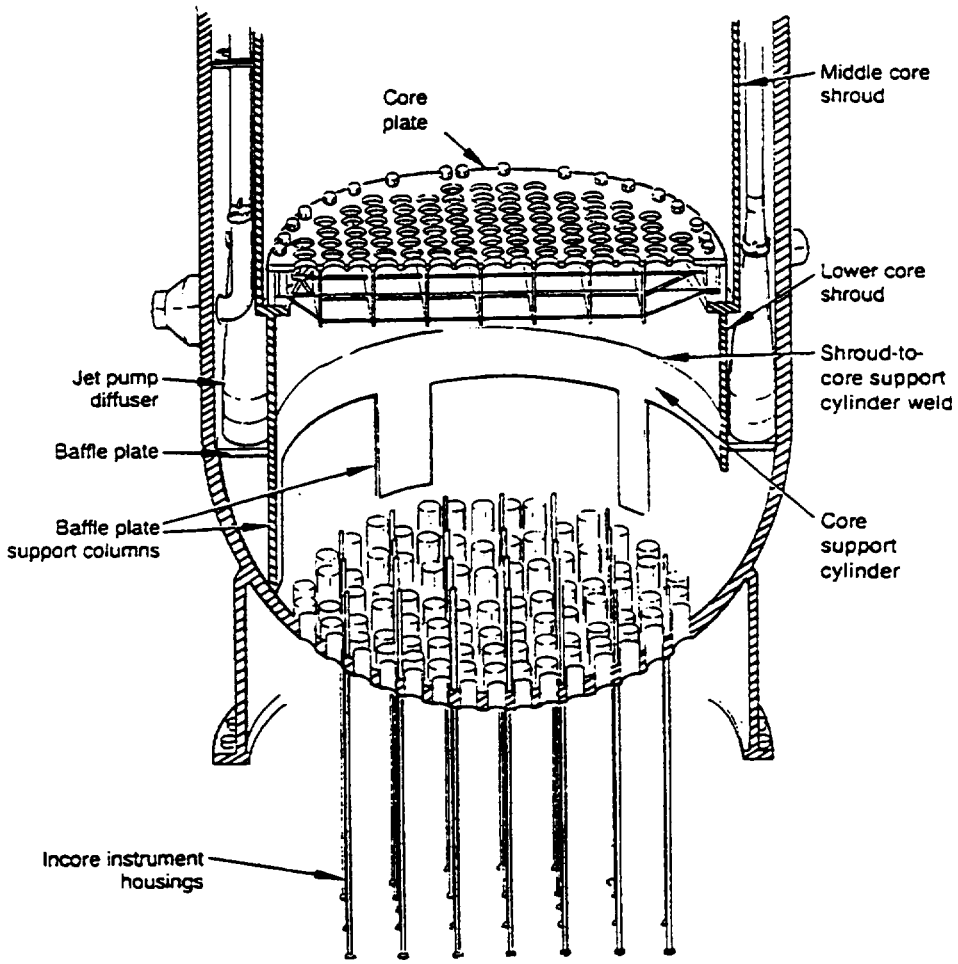

Figure 2-13. Lower plenum region internals including core plate.

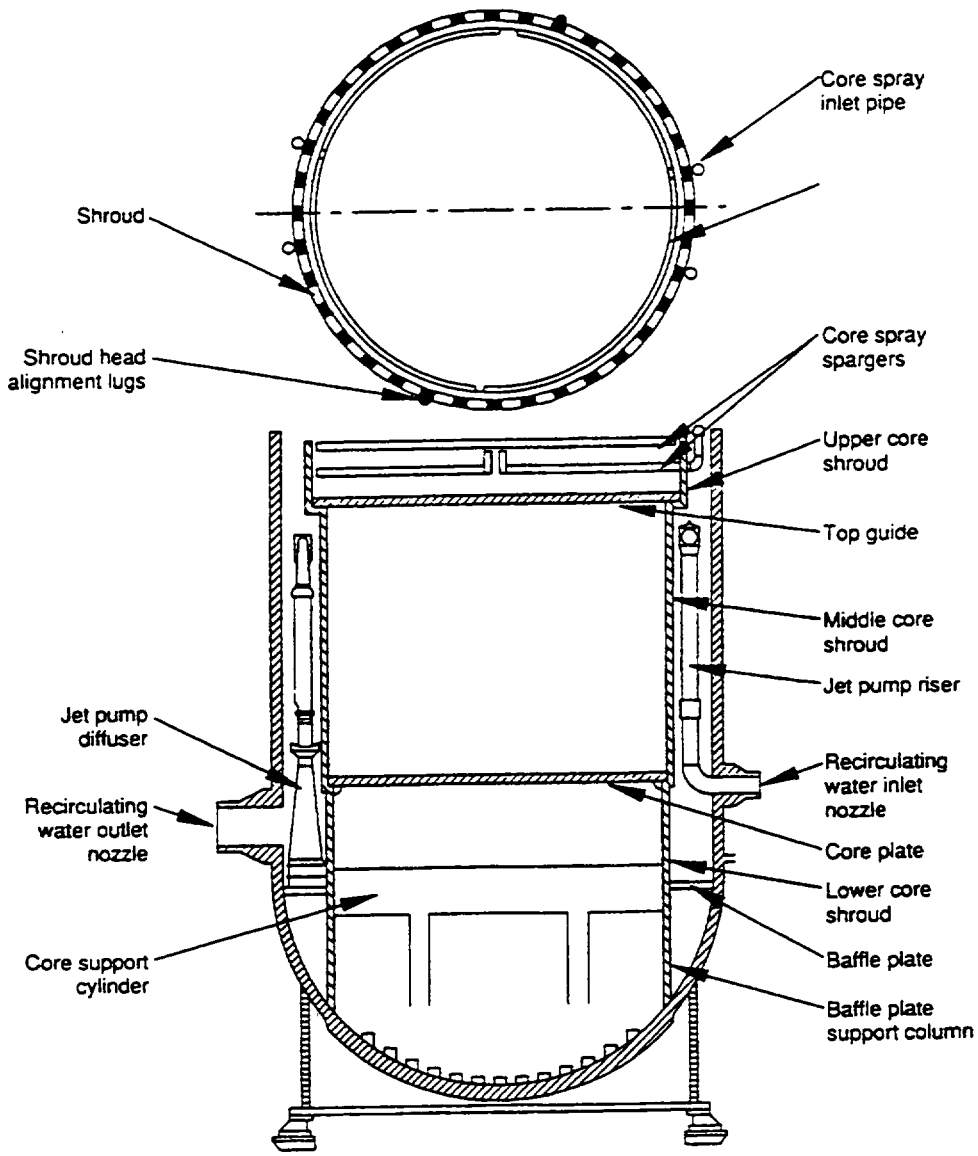

Figure 2-14. Arrangement of core shroud, core spray spargers, core shroud support, and jet pumps.

vertical welds are designated as V1, V2, V3, ... etc. The various welding methods used to fabricate core shrouds include shielded metal arc welding (SMAW), automated submerged arc welding (SAW), automated gas tungsten arc welding (GTAW), automated gas metal arc welding (GMAW), or a combination of these techniques.

The shroud is typically characterized by three regions (lower, middle, and upper), each with a different diameter. The lower portion of the shroud has the smallest diameter and surrounds part of the lower plenum. The bottom of the lower shroud is welded to the Alloy 600 support ring (BWR/2) or shroud support cylinder (BWR/3 through 6). On six BWR/4s, the lower portion of the shroud is slightly conical instead of cylindrical. The intermediate diameter middle shroud has the longest length and surrounds the fuel. It is bounded at the bottom by the core plate. The upper portion of the shroud has the largest diameter and surrounds the core discharge plenum. The upper shroud is bounded at the bottom by the top guide and at the top by the shroud head.

The support ledges (or support rings) for both the core plate and the top guide have been fabricated in different ways, making these items more or less susceptible to intergranular stress corrosion cracking (IGSCC). As indicated in NUREG-1544 (Medoff, 1996):

"Most plants have support rings fabricated from arc segments that are cut from rolled plates and welded to form the ring. This process exposes the short transverse direction in the material to the reactor coolant. In this case, elongated grains and stringers in the material are exposed to the reactor coolant environment, thereby increasing the probability for initiation of cracking or crack-like defects. Forged rings are typically not cut in this manner, and therefore do not have the "end grains" exposed to the environment."

2.1.11 Core Shroud Head and Bolts

The dome-shaped core shroud head covers the core discharge plenum located above the top guide plate and channels the steam-water mixture upwards toward the steam separators (see Figure 2-15). Steam standpipes are welded into openings in the dome. As Figure 2-15 indicates, the core shroud head bolts attach to the upper shroud using hold-down bolt assemblies in BWR/2s through 5s. In BWR/6s, the core shroud head bolts thread directly into the top flange of the grid. During refueling outages, most of the reactor vessel internals above the top guide (or grid) are removed in order to gain access to the fuel bundles. The shroud head bolts (see Figure 2-16) are very long for ease of removal and installation during refueling outages.

The core shroud head is typically made from Type 304 stainless steel and the bolts and nuts are typically Alloy 600. However, neither the head nor the bolts are safety-related components.

2.1.12 Guide Rods

During removal and installation of the core shroud head during outages, proper alignment with the shroud top flange is ensured with guide rods (see Figure 2-15). The guide rods are attached to the reactor vessel wall with brackets. The guide rods extend from approximately the reactor vessel top head flange down to the shroud top flange elevation. The guide rods engage brackets on the shroud head and are intended to prevent inadvertent contact with the vessel wall or other internal components.

The guide rods can be made of various stainless steels including XM-19, 304 or 316 and are not safety-related components.

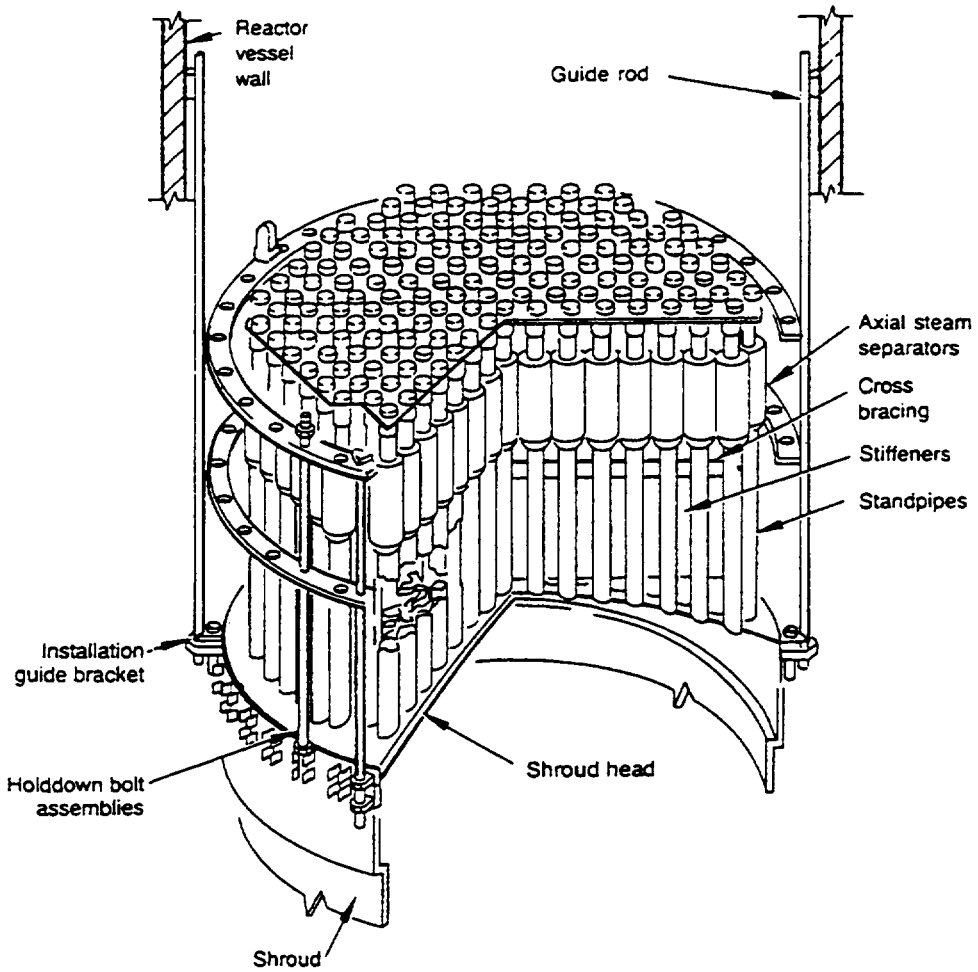

Figure 2-15. Arrangement of core shroud head, head bolts, standpipes, steam separators, and guide rods.

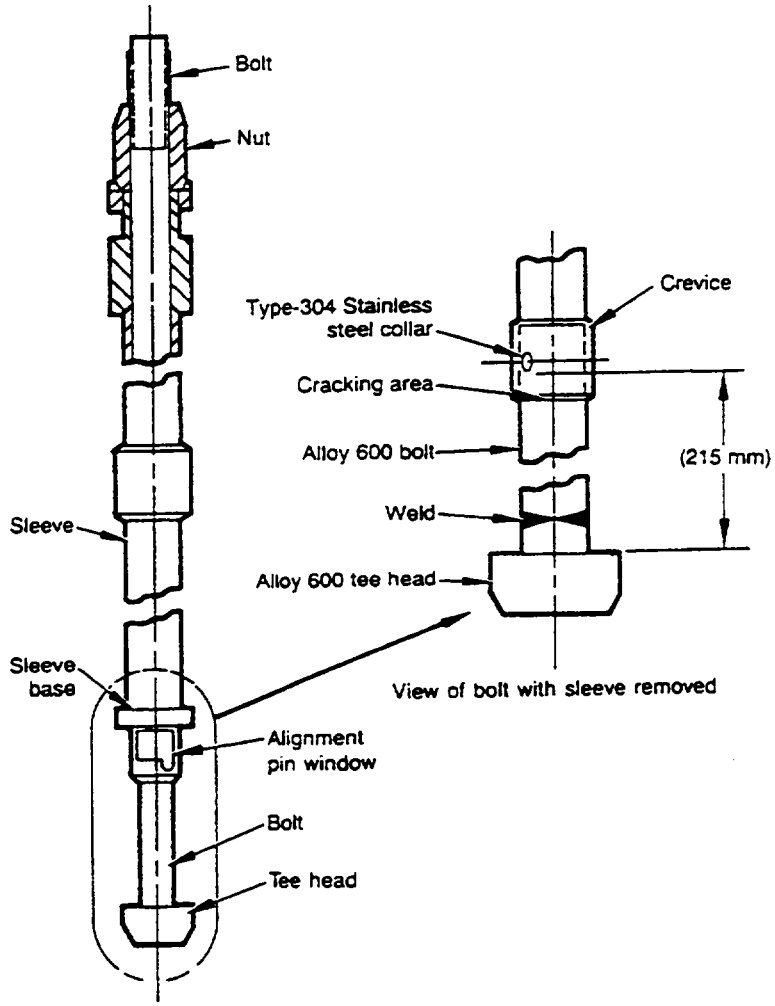

Figure 2-16. Core shroud head bolts.

2.1.13 Top Guide (or grid for BWR/6s)

The top guide is a safety-related component and maintains the proper horizontal spacing and positioning of the upper ends of the fuel assemblies, neutron monitoring instruments, neutron sources, and control rods. The top guides are typically made of either Type 304 or 304L stainless steel material. With the exception of top guides (or grids) for BWR/6 plants, the top guides consist of interlocking steel plates welded to or pinned in place using brackets to a circular rim. The interlocking intersections are formed when the upper beams, having slots cut on the lower portion, are joined at right angles with lower beams that have slots cut on the upper portion. The interlocking steel plates form a grid pattern (see Figure 2-17). BWR/6 plants use a crevice-free design where the rim and intersecting plates have actually been machined from a single piece of stainless steel. BWR/6 grids do have some fabrication welds but these are plant unique.

The top guide has slightly different designs for various BWRs. Virtually all BWR/2 through 5 plant top guides utilize alignment pins to properly position the top guide in the top of the core shroud. However, the BWR/2 top guide has additional lateral support brackets which are welded at both ends, connecting the top guide to the upper shroud. These brackets are redundant to the alignment pins in restraining the top guide from lateral movement. Four BWR/3s and two BWR/4s have just the alignment pins for lateral support. The remaining three BWR/3s and seven BWR/4s have a combination of alignment pins and reinforcement blocks for lateral support. The remaining ten BWR/4s and all BWR/5 plants have incorporated wedges in the top guide support design. The wedges are placed in the gap around the outer perimeter of the top guide to restrain lateral movement during seismic events. The wedges are bolted in place and nuts are tack welded to prevent loosening. This design also provides a redundant load path with the alignment pins. At BWR/2 through 5 plants that have predicted a potential upward lift of the top guide during design basis loadings, hold-down assemblies have been installed. The grid for BWR/6 plants is bolted in place onto the top flange of the upper shroud, forming an integral unit. This design eliminates the need for alignment pins, hold-down devices, and wedges.

2.1.14 Core Spray or HPCS / LPCS Assemblies

These assemblies include both the core spray piping internal to the reactor vessel and the core spray spargers. The design of the emergency core cooling system (ECCS) for BWR plants depends on the vintage of the plant. In all cases, there is high-pressure and low-pressure ECCS. For BWR/2 through BWR/4 plants, low pressure ECC is delivered inside the core shroud by two independent core spray lines and spargers (Figure 2-18). The high pressure ECC [typically high pressure coolant injection (HPCI) but some older plants use feedwater coolant injection (FWCI)] is delivered to the vessel annulus through the feedwater lines and spargers. For BWR/5 and 6 plants, low pressure core spray (LPCS) ECC is delivered inside the core shroud through one core spray line and its spargers while high pressure core spray (HPCS) ECC is delivered inside the core shroud through the second core spray line and its spargers.

Each spray ring inside the core shroud contains two 180-degree spargers. The core spray lines are supported by clamps that bolt into bosses which are welded to the reactor vessel wall. The core spray spargers are supported by brackets welded to the inside the core shroud. Spray nozzles connect to the spray spargers. The tee box pipe section, where the internal core spray piping connects to the spargers, is a subcomponent of the core spray sparger.

The core spray assemblies are considered to be safety-related components. At certain BWRs, as discussed in Section 2.1.4 above, the core spray or HPCS is used to deliver the SLC solution.

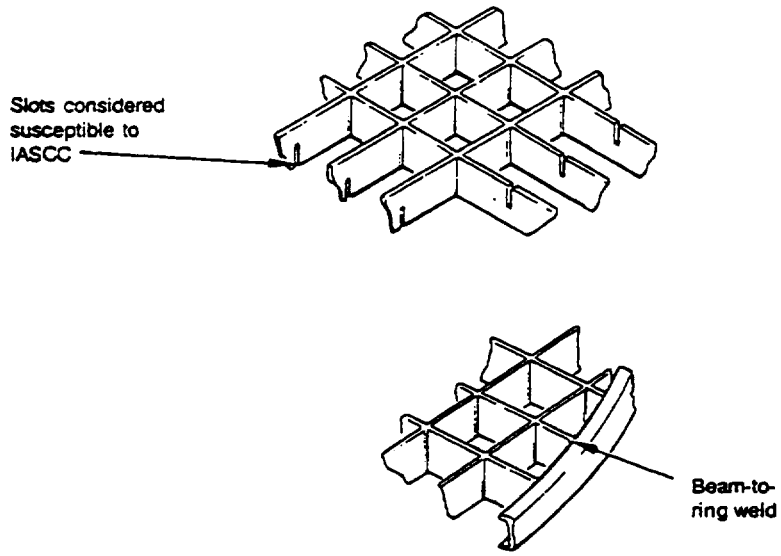

Figure 2-17. Fabrication details of typical BWR/2 through BWR/5 top guide.

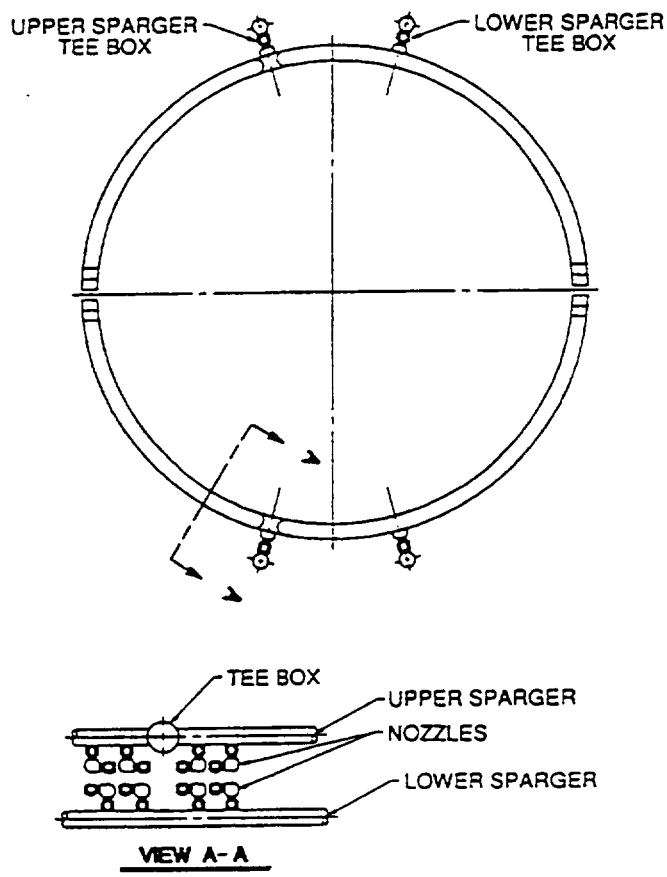

Figure 2-18. Core spray sparger.

2.1.15 LPCI Assemblies

Although many of the BWRs (except BWR/2s) have the capability of ECC low pressure flooding, the earlier BWR/3 and 4 plants have either a separate low pressure coolant injection (LPCI) system or an operating mode of residual heat removal (RHR) that can inject coolant into the reactor vessel via the recirculation discharge line (located outside of the reactor vessel) if necessary. Starting with some later BWR/4 units and all of the BWR/5 and 6 plants, LPCI consists of three or four independent loops delivering low pressure coolant directly to the reactor vessel and inside the core shroud.

For those plants with independent loops, LPCI couplings route the coolant flow from the reactor vessel nozzle to the core shroud. The LPCI couplings are located in the annulus area. The LPCI coupling used on the later BWR/4 and 5 plants is a straight component that interfaces with a baffle inside the shroud. Coolant flow is delivered just above the top guide. On BWR/6 plants, the LPCI coupling is S-shaped such that the LPCI reactor vessel nozzle is above the attachment to the shroud and coolant flow is delivered below the top guide, near the 2/3 core height level. A flow diverter is welded inside the shroud to disperse the coolant flow and reduce forces on the in-core instrumentation.

The LPCI assembly is a safety-related component.

2.1.16 Feedwater Sparger

Various designs and modifications have been made to feedwater nozzles and spargers but all accomplish the same basic function. The reactor is supplied with feedwater by means of four or six Type 304 stainless steel feedwater spargers supported by brackets attached to the reactor pressure vessel wall. Each sparger consists of one or more thermal sleeves, distribution header, and drilled holes or converging/diverging discharge nozzles (Figures 2-19 and 2-20). The thermal sleeve (typically made of Type 304 stainless steel or Alloy 600) is intended to protect the hot feedwater nozzle surface from coming in contact with the cold feedwater, thus minimizing the potential for thermal fatigue damage in the nozzle or the safe end-to-feedwater nozzle welds. A more recently designed feedwater sparger, called the triple sleeve feedwater sparger, has been used to replace the older feedwater sparger in efforts to reduce the thermal fatigue cycling effects at the feedwater vessel nozzle. The triple sleeve, double seal spargers are designed to eliminate the feedwater leaks that were causing the fatigue cracking problems in the past. The newer design converging/diverging discharge nozzles are welded to the top of the distribution headers to ensure that the thermal sleeves and distribution headers remain full of water during all modes of reactor operation. This will reduce the likelihood of a steam bubble getting trapped in the feedwater nozzle region and causing water hammer.

The feedwater enters through the thermal sleeves, the distribution headers, and then the converging/diverging discharge nozzles, which direct the feedwater from the distribution header radially inward into the annulus region. The relatively cool feedwater [about 216°C (420°F)] in the annulus region subcools the water flowing to the recirculation pumps and jet pumps to ensure adequate net positive suction head to these pumps, so that they will not be damaged by cavitation. The feedwater sparger is not considered to be a safety-related component.

2.1.17 Jet Pump Assemblies

Jet pumps were introduced with the BWR/3 design. The jet pumps, located in the annulus region between the reactor vessel wall and the core shroud, force flow through the core to yield a higher reactor power than would be possible with natural circulation. Jet pump assemblies are considered to be safety-related components. Two jet pumps and a common inlet header (the inlet riser) form an assembly (see

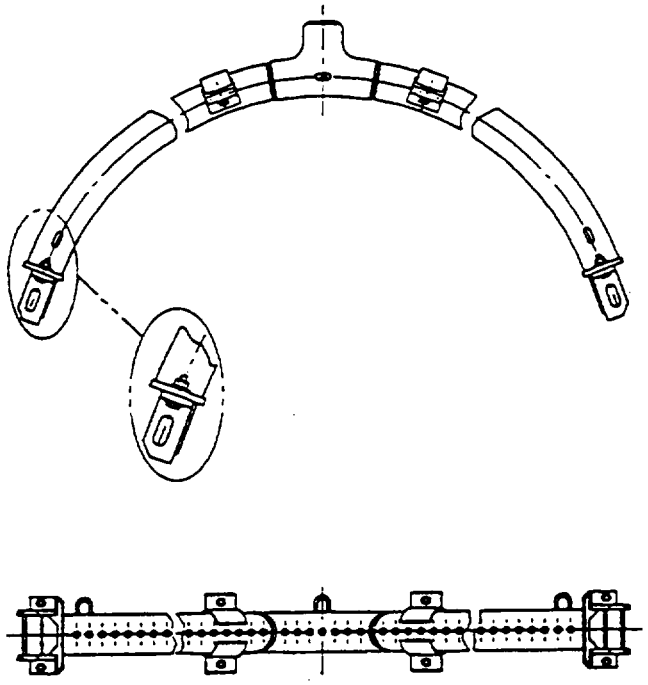

Figure 2-19. Feedwater sparger with holes.

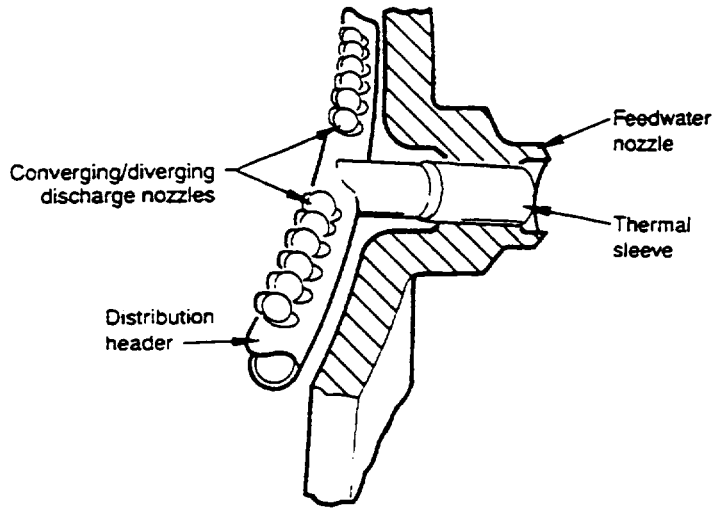

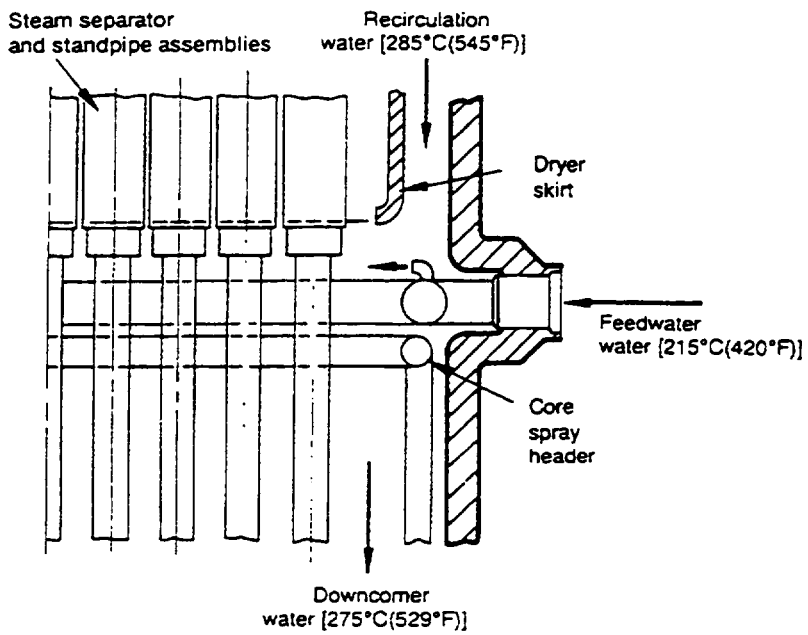

Figure 2-20. Feedwater sparger with nozzles.

Figure 2-21). Each jet pump consists of an inlet mixer and a diffuser assembly. The typical 20 jet pumps (Grand Gulf has 24 and Duane Arnold has 16) are positioned in two semicircular groups.

A thermal sleeve is welded into the recirculating water inlet nozzle to reduce the stresses in the nozzle wall caused by differences in temperatures between the inlet water and nozzle wall. The thermal sleeve is welded to an inlet riser used to lower the RPV inlet nozzle elevation level below the active fuel region to reduce fast neutron flux exposure to the nozzle welds. The inlet riser connects the vessel nozzle to the two inlet mixers, via a transition casting welded to the top of the inlet riser. Riser support braces, welded to the reactor vessel wall and the inlet riser, provide lateral support for the upper end of the inlet riser yet allow (by brace flexibility) for the vertical differential thermal expansion between the riser and reactor pressure vessel during heatup and cooldown. Restrainers, supported off of the inlet riser, control lateral vibration of the inlet mixers by providing lateral support through a combination of set screws and wedges.

The inlet mixers, at the top of the jet pump assembly, direct the coolant flow downward from the transition piece casting. There are two inlet mixers per jet pump. An inlet mixer consists of a 180-degree elbow, a nozzle section with suction inlets, and a mixing throat. The mixing throat connects to the diffuser with a slip joint collar. A hold-down beam clamps together the inlet riser transition casting and an inlet mixer. This mechanical joint design allows the inlet mixer to be a removable/replaceable component. BWR/3 and 4 jet pumps have a single opening nozzle design while BWR/5 and 6 jet pumps have five smaller openings in the newer nozzle design.

The jet pump diffusers are conical shaped sections which recover static head from the available kinetic energy of the coolant. The jet pump diffusers are welded to the tops of adapters that first had their lower ends welded to the shroud support (baffle) plate. The diffusers are typically considered a permanent installation.

The jet pump is primarily composed of forged Type304 stainless steel. Exceptions are the inlet transition piece casting, the wedge casting, and the diffuser collar casting (304 or 304L). The diffuser is made by welding a stainless steel forged ring to a forged Alloy 600 ring. The inlet mixer contains a pin, insert, and hold-down beam made of Alloy X-750.

Jet pump instrument sensing lines, typically made of Type 304 stainless steel, are used to monitor jet pump flow. There is one sensing line for each jet pump. The lines are welded to the diffusers and are routed out through one of two jet pump instrumentation nozzles. These lines are not considered safety-related.

Figure 2-22 illustrates the post-accident core reflooding safety feature of the jet pump arrangement in the reactor vessel. In the case of a recirculation line break, the region inside the core shroud can only be drained down to a level just below the top of the jet pumps. This assumes that the jet pumps remain intact as do the access hole covers, core shroud support, and the core shroud itself. This is referred to as the 2/3 core coverage concept. Any potential leakage from the jet pumps, access hole covers, core shroud support, or core shroud in conjunction with a recirculation line break, could lower the core reflood level (depending on the leak location) all the way down to the recirculation outlet elevation. Additional coolant injection could possibly make up the leakage but would require sustained inflow.

2.1.18 Steam Separator and Standpipes

The steam separator assembly increases the quality of the steam from 10 to 90% as it travels between the core exit and the steam dryers. The steam separators are an array of vertical standpipes welded to the shroud head (see Figure 2-15). At the top of each standpipe is a steam separator with no

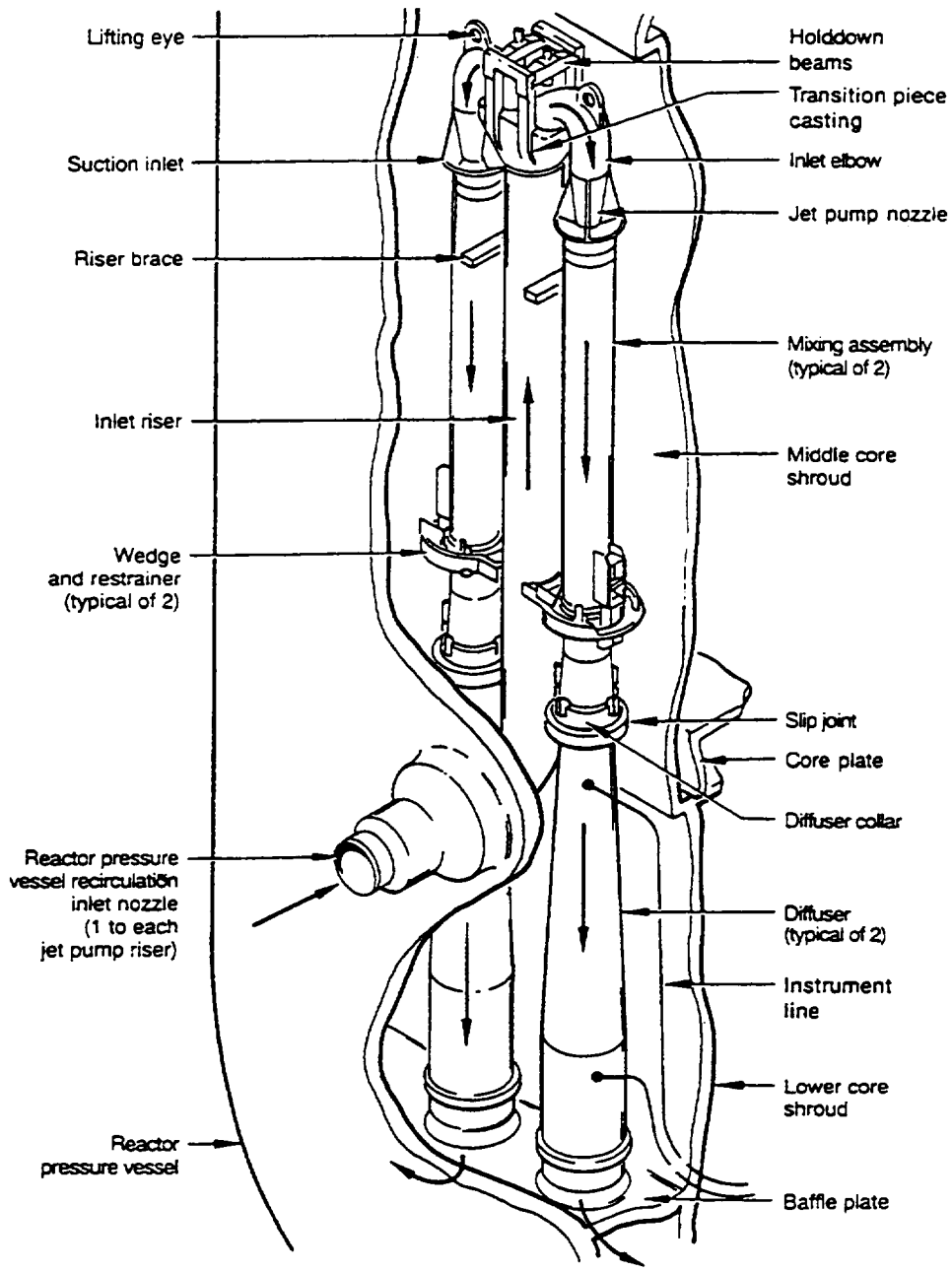

Figure 2-21. Jet pump assembly.

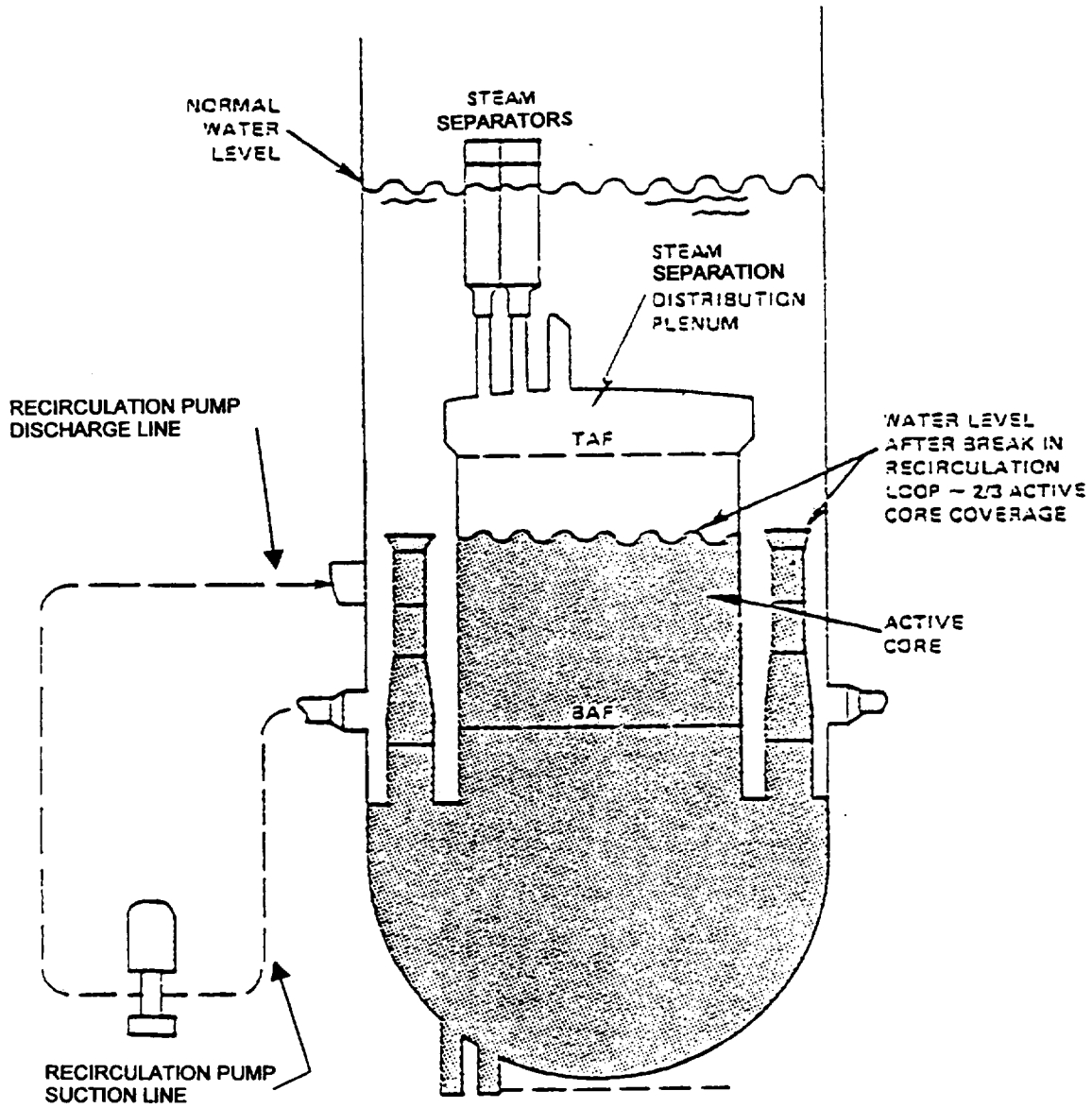

Figure 2-22. Core submersion capability of jet pump system.

moving parts (see Figure 2-23). Fixed vanes inside each separator impart a spin to the rising steam-water mixture, establishing a vortex that helps separate the water from the steam. The steam continues to rise to the steam dryers while the separated water drains back down into the pool of coolant outside of the shroud head and continues to flow back to the annulus region. The separators are cross-braced to form a rigid structure to prevent flow-induced vibration.

The steam separators and standpipes are removed during refueling outages. The standpipes are typically made of Type 304 stainless steel but some plants also use Type 316L stainless steel. The separators are also typically made of Type 304 stainless steel but a few plants also use either 304L or 316L. The steam separators and standpipes are not considered to be safety-related components.

2.1.19 Steam Dryer Assemblies

The steam dryers (see Figure 2-24) are fabricated into a one-piece assembly with no moving parts and increase the steam quality to greater than 99.9%. The moisture removed from the dryer is collected in troughs and drains into the annular region between the reactor vessel wall and the core shroud. A skirt extends down into the water to form a seal between the wet steam plenum and the dry steam flowing out the top of the dryers and out through the main steam nozzles.

During installation and removal for refueling outages, the assembly is properly aligned by the vertical guide rods. The entire unit is supported by brackets that are attached to the reactor vessel wall. These brackets attach to the steam dryer support ring. Upward movement of the steam dryer assembly is restricted by hold-down brackets attached to the reactor pressure vessel top head. The steam dryer assembly is typically made from Type 304 stainless steel but some plants have used 304L or 316L stainless steel. The steam dryer assembly is not considered to be a safety-related component.

2.1.20 Head Spray Nozzle

The reactor vessel head spray nozzle is mounted to a short length of pipe and a flange, which is bolted to a mating flange on the reactor vessel top head nozzle. This head spray nozzle is readily accessible since the reactor vessel head is removed during refueling outages. This is not considered to be a safety-related component.

2.1.21 Surveillance Specimen Holders

The surveillance specimen holders are welded baskets containing impact and tensile specimen capsules. These holders hang from brackets welded to the inside of the reactor vessel at the mid-height of the core. This exposes the specimens to the same environment and neutron flux experienced by the reactor vessel wall. The holders are typically made from Type 304 stainless steel. They are not considered safety-related components.

2.2 Variations and Similarities Based on BWR Type

Although discussed briefly in the reactor vessel internals descriptions above, design changes were made while the various BWR reactor types BWR/2 through 6 were being developed by GE. These variations are reiterated again to clarify what changed and what remains the same for each reactor type. Of the components listed above, only the jet pump and LPCI assemblies are not incorporated in all BWR plants. Table 2-1 provides information regarding system design variations and similarities. The discussions below amplify the information found in Table 2-1.

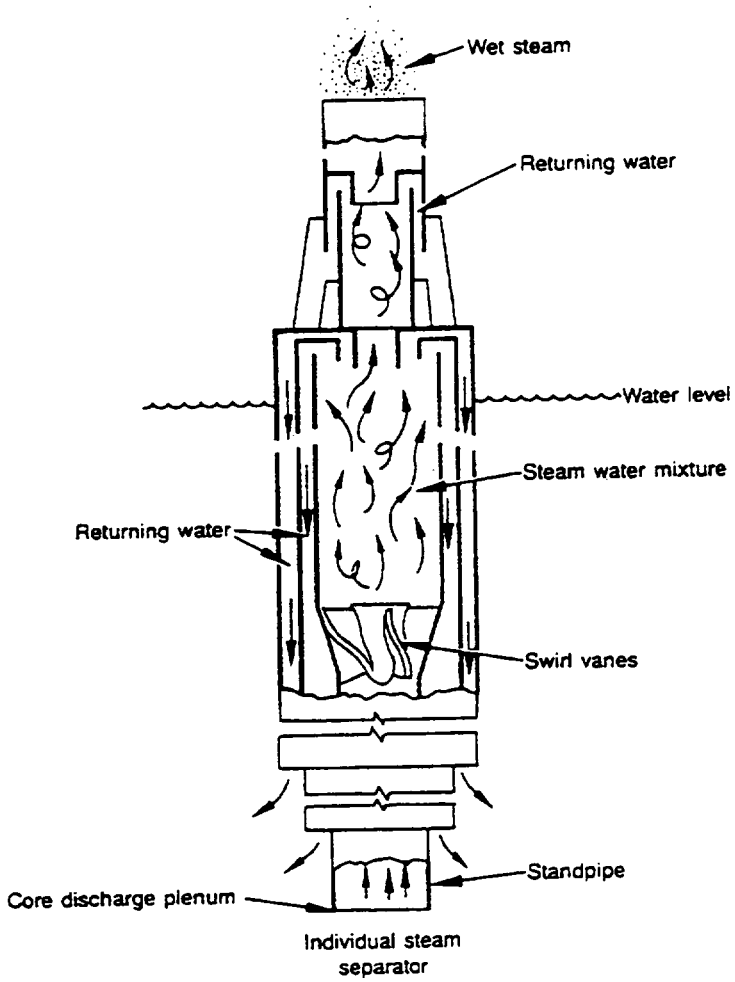

Figure 2-23. Steam separator assembly.

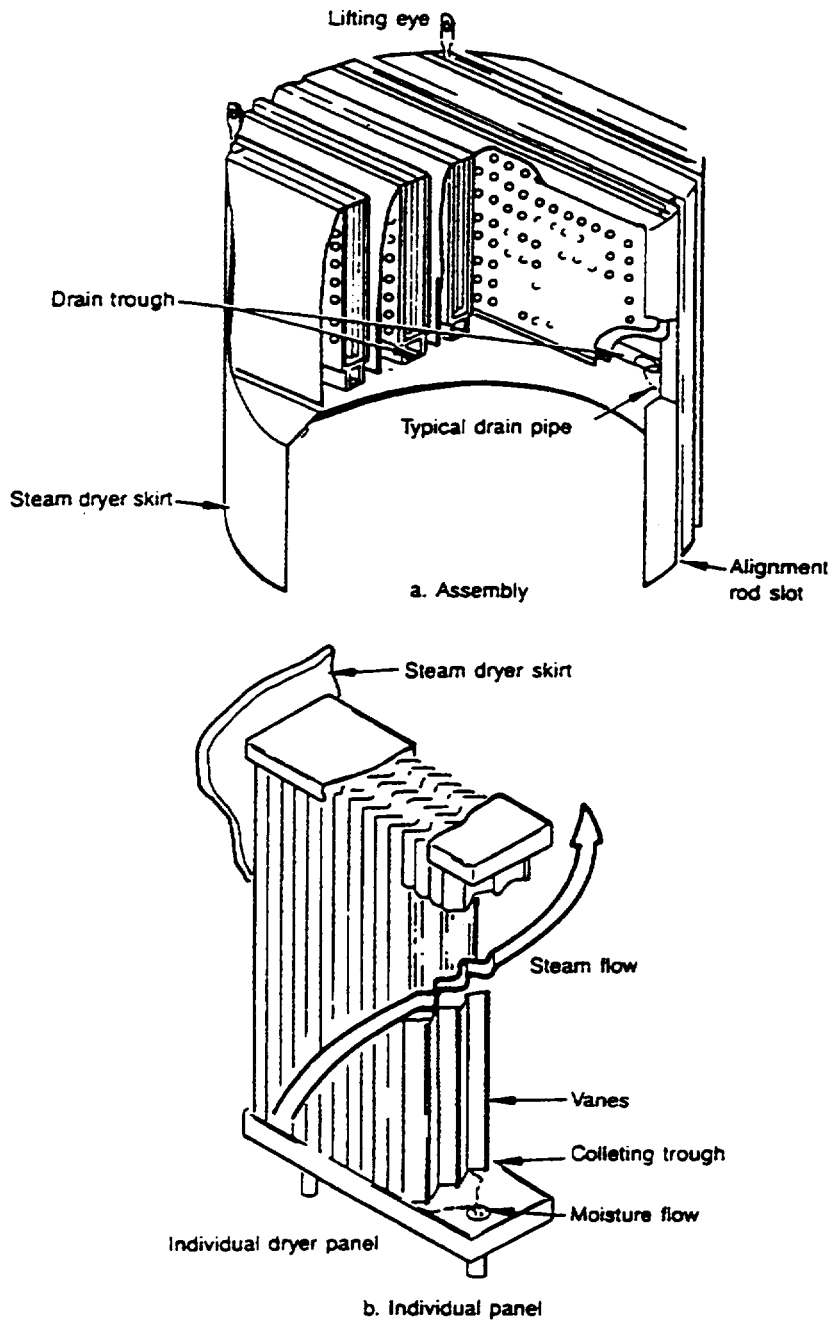

Figure 2-24. Steam dryer assembly.

Table 2-1. System variations in BWR plants.

Plant Name	Reactor Type	Product Line	Number of Recirc Loops	Jet Pumps	IC or RCIC	ECC Low Pressure Flooding System and Delivery Point	ECC Low Pressure Spray System and Delivery Point	ECC High Pressure Spray System and Delivery Point	SLC Entry Into RPV Via	Shutdown Cooling (RHR Function)	Standby Coolant Supply
Nine Mile Point 1	BWR/2	63	5	No jet pumps, external pumps	IC	None	Inside core shroud via 2 core spray loops	Into vessel annulus via feedwater FWCI	Line into lower plenum	SCS	UHS water to vessel via condenser and feedwater
Oyster Creek	BWR/2	63	5	No jet pumps, external pumps	IC	None	Inside core shroud via 2 core spray loops	Into vessel annulus via feedwater FWCI	Line into lower plenum	SCS	UHS water to vessel via condenser and feedwater
Dresden 2	BWR/3	65	2	20	IC	Into vessel lower plenum via LPCI into recirc discharge	Inside core shroud via 2 core spray loops	Into vessel annulus via HPCI into feedwater	Line into lower plenum	SCS	UHS water to vessel via feedwater
Millstone 1	BWR/3	65	2	20	IC	Into vessel lower plenum via LPCI into recirc discharge	Inside core shroud via 2 core spray loops	Into vessel annulus via feedwater FWCI	Line into lower plenum	SCS	UHS water to vessel via feedwater
Monticello	BWR/3	66	2	20	RCIC	Into vessel lower plenum via RHR (a) into recirc discharge	Inside core shroud via 2 core spray loops	Into vessel annulus via HPCI into feedwater	Line into lower plenum	SCM	UHS water to vessel via RHR
Dresden 3	BWR/3	66	2	20	IC	Into vessel lower plenum via LPCI into recirc discharge	Inside core shroud via 2 core spray loops	Into vessel annulus via HPCI into feedwater	Line into lower plenum	SCS	UHS water to vessel via feedwater
Vermont Yankee	BWR/4	67	2	20	RCIC	Into vessel lower plenum via RHR (a) into recirc discharge	Inside core shroud via 2 core spray loops	Into vessel annulus via HPCI into feedwater	Line into lower plenum	SCM	UHS water to vessel via RHR
Pilgrim	BWR/3	66	2	20	RCIC	Into vessel lower plenum via RHR (a) into recirc discharge	Inside core shroud via 2 core spray loops	Into vessel annulus via HPCI into feedwater	Line into lower plenum	SCM	UHS water to vessel via RHR

Table 2-1. (continued).

Plant Name	Reactor Type	Product Line	Number of Recirc Loops	Jet Pumps	IC or RCIC	ECC Low Pressure Flooding System and Delivery Point	ECC Low Pressure Spray System and Delivery Point	ECC High Pressure Spray System and Delivery Point	SLC Entry Into RPV Via	Shutdown Cooling (RHR Function)	Standby Coolant Supply
Quad Cities 1	BWR/3	66	2	20	RCIC	Into vessel lower plenum via RHR (a) into recirc discharge	Inside core shroud via 2 core spray loops	Into vessel annulus via HPCI into feedwater	Line into lower plenum	SCM	UHS water to vessel via RHR
Quad Cities 2	BWR/3	66	2	20	RCIC	Into vessel lower plenum via RHR (a) into recirc discharge	Inside core shroud via 2 core spray loops	Into vessel annulus via HPCI into feedwater	Line into lower plenum	SCM	UHS water to vessel via RHR
Cooper	BWR/4	67	2	20	RCIC	Into vessel lower plenum via RHR (a) into recirc discharge	Inside core shroud via 2 core spray loops	Into vessel annulus via HPCI into feedwater	Line into lower plenum	SCM	UHS water to vessel via RHR
Peach Bottom 2	BWR/4	67	2	20	RCIC	Into vessel lower plenum via RHR (a) into recirc discharge	Inside core shroud via 2 core spray loops	Into vessel annulus via HPCI into feedwater	Line into lower plenum	SCM	UHS water to vessel via RHR
Browns Ferry 1	BWR/4	67	2	20	RCIC	Into vessel lower plenum via RHR (a) into recirc discharge	Inside core shroud via 2 core spray loops	Into vessel annulus via HPCI into feedwater	Line into lower plenum	SCM	UHS water to vessel via RHR
Peach Bottom 3	BWR/4	67	2	20	RCIC	Into vessel lower plenum via RHR (a) into recirc discharge	Inside core shroud via 2 core spray loops	Into vessel annulus via HPCI into feedwater	Line into lower plenum	SCM	UHS water to vessel via RHR
Duane Arnold	BWR/4	67	2	16	RCIC	Into vessel lower plenum via RHR (a) into recirc discharge	Inside core shroud via 2 core spray loops	Into vessel annulus via HPCI into feedwater	Line into lower plenum	SCM	UHS water to vessel via RHR
Browns Ferry 2	BWR/4	67	2	20	RCIC	Into vessel lower plenum via RHR (a) into recirc discharge	Inside core shroud via 2 core spray loops	Into vessel annulus via HPCI into feedwater	Line into lower plenum	SCM	UHS water to vessel via RHR
FitzPatrick	BWR/4	67	2	20	RCIC	Into vessel lower plenum via RHR (a) into recirc discharge	Inside core shroud via 2 core spray loops	Into vessel annulus via HPCI into feedwater	Line into lower plenum	SCM	UHS water to vessel via RHR

Table 2-1. (continued).

Plant Name	Reactor Type	Product Line	Number of Recirc Loops	Jet Pumps	IC or RCIC	ECC Low Pressure Flooding System and Delivery Point	ECC Low Pressure Spray System and Delivery Point	ECC High Pressure Spray System and Delivery Point	SLC Entry Into RPV Via	Shutdown Cooling (RHR Function)	Standby Coolant Supply
Brunswick 2	BWR/4	67	2	20	RCIC	Into vessel lower plenum via RHR (a) into recirc discharge	Inside core shroud via 2 core spray loops	Into vessel annulus via HPCI into feedwater	Line into lower plenum	SCM	UHS water to vessel via RHR
Hatch 1	BWR/4	67	2	20	RCIC	Into vessel lower plenum via RHR (a) into recirc discharge	Inside core shroud via 2 core spray loops	Into vessel annulus via HPCI into feedwater	Line into lower plenum	SCM	UHS water to vessel via RHR
Browns Ferry 3	BWR/4	67	2	20	RCIC	Into vessel lower plenum via RHR (a) into recirc discharge	Inside core shroud via 2 core spray loops	Into vessel annulus via HPCI into feedwater	Line into lower plenum	SCM	UHS water to vessel via RHR
Brunswick 1	BWR/4	67	2	20	RCIC	Into vessel lower plenum via RHR (a) into recirc discharge	Inside core shroud via 2 core spray loops	Into vessel annulus via HPCI into feedwater	Line into lower plenum	SCM	UHS water to vessel via RHR
Hatch 2	BWR/4	67	2	20	RCIC	Into vessel lower plenum via RHR (a) into recirc discharge	Inside core shroud via 2 core spray loops	Into vessel annulus via HPCI into feedwater	Line into lower plenum	SCM	UHS water to vessel via RHR
Susquehanna 1	BWR/4	67 1/2	2	20	RCIC	Into vessel lower plenum via RHR (a) into recirc discharge	Inside core shroud via 2 core spray loops	Into vessel annulus via HPCI into feedwater	Line into lower plenum	SCM	UHS water to vessel via RHR
LaSalle 1	BWR/5	69	2	20	RCIC	Inside core shroud via RHR (b)	Inside core shroud via LPCS loop	Inside core shroud via HPCS	Line into lower plenum	SCM	UHS water to vessel via RHR
LaSalle 2	BWR/5	69	2	20	RCIC	Inside core shroud via RHR (b)	Inside core shroud via LPCS loop	Inside core shroud via HPCS	Line into lower plenum	SCM	UHS water to vessel via RHR
WNP 2	BWR/5	69	2	20	RCIC	Inside core shroud via RHR (b)	Inside core shroud via LPCS loop	Inside core shroud via HPCS	HPCS	SCM	UHS water to vessel via RHR
Susquehanna 2	BWR/4	67 1/2	2	20	RCIC	Into vessel lower plenum via RHR (a) into recirc discharge	Inside core shroud via 2 core spray loops	Into vessel annulus via HPCI into feedwater	Line into lower plenum	SCM	UHS water to vessel via RHR

Table 2-1. (continued).

Plant Name	Reactor Type	Product Line	Number of Recirc Loops	Jet Pumps	IC or RCIC	ECC Low Pressure Flooding System and Delivery Point	ECC Low Pressure Spray System and Delivery Point	ECC High Pressure Spray System and Delivery Point	SLC Entry Into RPV Via	Shutdown Cooling (RHR Function)	Standby Coolant Supply
Grand Gulf	BWR/6	72	2	24	RCIC	Inside core shroud via RHR (b)	Inside core shroud via LPCS loop	Inside core shroud via HPCS	HPCS	SCM	UHS water to vessel via RHR
Limerick 1	BWR/4	67 1/2	2	20	RCIC	Into vessel lower plenum via RHR (a) into recirc discharge and inside core shroud via RHR (b)	Inside core shroud via 2 core spray loops	Into vessel annulus via HPCI into feedwater and inside core shroud via core spray	Core spray	SCM	UHS water to vessel via RHR
River Bend	BWR/6	72	2	20	RCIC	Inside core shroud via RHR (b)	Inside core shroud via LPCS loop	Inside core shroud via HPCS	Line into lower plenum	SCM	UHS water to vessel via RHR
Hope Creek	BWR/4	67 1/2	2	20	RCIC	Into vessel lower plenum via RHR (a) into recirc discharge and inside core shroud via RHR (b)	Inside core shroud via 2 core spray loops	Into vessel annulus via HPCI into feedwater and inside core shroud via core spray	Line into lower plenum	SCM	UHS water to vessel via RHR
Clinton	BWR/6	72	2	20	RCIC	Inside core shroud via RHR (b)	Inside core shroud via LPCS loop	Inside core shroud via HPCS	HPCS	SCM	UHS water to vessel via RHR
Perry	BWR/6	72	2	20	RCIC	Inside core shroud via RHR (b)	Inside core shroud via LPCS loop	Inside core shroud via HPCS	HPCS	SCM	UHS water to vessel via RHR
Fermi 2	BWR/4	67	2	20	RCIC	Into vessel lower plenum via RHR (a) into recirc discharge	Inside core shroud via 2 core spray loops	Into vessel annulus via HPCI into feedwater	Line into lower plenum	SCM	UHS water to vessel via RHR
Nine Mile Point 2	BWR/5	69	2	20	RCIC	Inside core shroud via RHR (b)	Inside core shroud via LPCS loop	Inside core shroud via HPCS	HPCS	SCM	UHS water to vessel via RHR
Limerick 2	BWR/4	67 1/2	2	20	RCIC	Into vessel lower plenum via RHR (a) into recirc discharge and inside core shroud via RHR (b)	Inside core shroud via 2 core spray loops	Into vessel annulus via HPCI into feedwater and inside core shroud via core spray	Core spray	SCM	UHS water to vessel via RHR

Table 2-1. (continued).

Plant Name	Reactor Type	Product Line	Number of Recirc Loops	Jet Pumps	IC or RCIC	ECC Low Pressure Flooding System and Delivery Point	ECC Low Pressure Spray System and Delivery Point	ECC High Pressure Spray System and Delivery Point	SLC Entry Into RPV Via	Shutdown Cooling (RHR Function)	Standby Coolant Supply

Table Notes:

Data From NRC BWR Fundamentals Handbook (USNRC, 1979) and NRC Plantbooks. Plants listed by start date.

Recirc - recirculation

Jet Pump Nozzles - BWR/3 and BWR/4 plants used a single large opening nozzle design while BWR/5 and BWR/6 plants used a nozzle with five smaller openings. Individual plants may have replaced jet pump nozzles on an as desired basis. These nozzles are between the transition piece casting and the mixing assembly.

IC - Isolation condenser system used for reactor isolation pressure and inventory control. IC exits directly from the reactor vessel and returns to the suction side of the recirculation system.

RCIC - Reactor core isolation cooling provides high pressure makeup water to the reactor vessel. On BWR/3s and 4s, the RCIC takes water from the condensate storage tank (CST) or the suppression pool and pumps it back to the reactor vessel through the feedwater system. On BWR/5s and 6s, the RCIC takes water from the CST or the suppression pool and pumps it back to the reactor vessel via the feedwater and head spray systems.

LPCI - On BWR/2 plants, a low pressure coolant injection (LPCI) system does not exist. On three BWR/3 plants (Dresden 2 & 3 and Millstone), a separate LPCI system exists whereas on all other BWR/3s and 4s, LPCI is a mode of RHR. On BWR/3 and 4 plants, LPCI takes water from suppression pool and pumps to the discharge side of recirculation system. On BWR/5s and 6s, LPCI takes water from suppression pool and pumps directly to reactor vessel, inside the core shroud using three independent loops. Limerick 1 and 2 and Hope Creek are unique examples of late BWR/4 plants that also have direct LPCI injection inside the shroud using four separate loops.

RHR - Residual heat removal:

RHR (a) - Equipped with 2 RHR loops, LPCI mode injects to the discharge side of the recirculation system.

RHR (b) - Equipped with 3 RHR loops, LPCI mode injects directly to the reactor vessel, inside the shroud.

CS - Core spray takes water from suppression pool and pumps directly into the reactor vessel using two loops. Some plants (such as Limerick 1 and 2) use core spray for standby liquid control (SLC) system injection.

LPCS - Low pressure core spray takes water from suppression pool and pumps directly into the reactor vessel using one loop, on BWR/5s and 6s.

FWCI - Feedwater coolant injection (using either normal or emergency power) uses the normal feedwater pumps and piping for one mode of emergency core cooling (ECC) on BWR/2s and one BWR/3 (Millstone 1).

HPCI - High pressure coolant injection, on all remaining BWR/3s and all BWR/4s, takes water from suppression pool or CST and pumps directly into the feedwater system using one loop. Some BWR/4s (like Limerick 1 and 2 and Hope Creek) also have HPCI tie into core spray.

HPCS - High pressure core spray, on BWR/5s and 6s, takes water from suppression pool and pumps directly into the reactor vessel using one loop. Some plants (such as Grand Gulf, WNP 2, Nine Mile Pt. 2, Clinton, and Perry) use HPCS line for SLC injection.

SLC - Standby Liquid Control is a stand alone system that injects sodium pentaborate into the reactor vessel in case the control rod drive system becomes inoperable and scram is required to shutdown the reactor. It typically enters through the vessel bottom head into the lower plenum.

SCM - Shutdown cooling mode (RHR), consists of various modes to carry out basic heat removal functions. One method of reactor isolation pressure and inventory control is when reactor steam is reduced in pressure and then condensed in the RHR heat exchanger. Since resultant condensate can be directed to the RCIC system pump suction, both systems together provide an inventory-conserving closed loop.

SCS - Shutdown cooling system, a separate system on BWR/2s and some BWR/3 plants used for heat removal functions that flows from the recirculation piping system (suction) and back into the recirculation piping system (discharge).

UHS - Ultimate heat sink, typically the service water system.

In order to verify these design changes between BWR reactor types and to try and determine specific additional details regarding materials used or fabrication techniques, plant-specific information was reviewed using the Updated Final Safety Analysis Reports (UFSARs). In an effort to obtain this specific information, tables were generated that broke each of the identified reactor vessel internals into its comprising parts or subcomponents. The tables revealed the lack of detailed information available in the UFSAR that is of interest to this task. It is believed that such detailed information does exist at GE and at each plant/utility in the form of project drawings and specifications. However, this level of detailed information was not available for this report.

2.2.1 BWR/2 Reactor Type

The BWR/2 plants have a recirculation system with five separate piping loops and pumps external to the reactor vessel. Therefore, no internal jet pumps exist in BWR/2 plants. A diffuser (or baffle) skirt (see Figure 2-1) hangs down from the conical shroud support skirt to protect in-core and CRD housings and guide tubes from flow-induced vibrations created by coolant from the five recirculation inlet nozzles. BWR/2 plants do not have access holes in the conical shroud support skirt.

Both BWR/2 plants use the isolation condenser (IC) system for reactor isolation pressure and inventory control. Shutdown cooling is achieved by a distinct shutdown cooling system. Reactor vessel head spray obtains coolant from the control rod drive hydraulic (CRDH) system. The suppression pool provides coolant for a number of the engineered safety features. However, if the suppression pool coolant is not available or insufficient, the standby coolant system permits water from the ultimate heat sink (river, lake, etc.) to be utilized. For BWR/2 plants, the standby coolant system can provide ultimate heat sink water to the vessel through the condenser and feedwater systems.

High pressure ECC is delivered into the reactor vessel annulus (between the reactor vessel wall and the core shroud) using the feedwater piping and spargers. Low pressure ECC spray is delivered directly inside the core shroud with the two core spray loops. Low pressure ECC flooding capabilities do not exist with the BWR/2 plants.

The UFSARs for both of the existing BWR/2 plants, Nine Mile Point 1 and Oyster Creek, were reviewed for information regarding materials, fabrication techniques, or items related to design importance. The basic system design was reasonably verified. In addition, some material information was obtained and certain fabrication techniques were also verified.

2.2.2 BWR/3 Reactor Type

Starting with the BWR/3 plants, two external piping loops of the recirculation system were designed to provide coolant flow to 20 jet pumps inside the reactor vessel (see Figure 2-2). This change to internal jet pump assemblies eliminated the need for the diffuser skirt (considered herein as part of the core shroud support) in BWR/2 plants. However, this change also altered the design of the core shroud support from a conical shape to a flat plate with vertical column supports or gusset plates as redundant support members. The flat plate (called the shroud support plate or baffle plate) provides a surface to which the jet pump diffuser is welded. This helps support the jet pump assembly. BWR/3 plants have two access holes, spaced 180 degrees apart, located in the flat shroud support plate.

Most of the BWR/3 plants changed how pressure and inventory control, shutdown cooling, and standby cooling systems were designed. Three BWR/3 plants use the isolation condenser (IC) system for reactor isolation pressure and inventory control while the remaining four BWR/3 plants use reactor core isolation cooling (RCIC) for inventory control and the safety relief valves for reactor isolation pressure control. The same three BWR/3 plants identified above perform shutdown cooling by utilizing a distinct

shutdown cooling system. The four BWR/3 plants identified above utilize the shutdown cooling mode of the RHR system for shutdown cooling. The standby coolant system provides water to the vessel using the feedwater system (for the same three BWR/3 plants discussed above) or the RHR system (for the same four BWR/3 plants discussed above). Reactor vessel head spray capabilities are provided coolant from the CRDH system (same as BWR/2).

High pressure ECC is delivered into the reactor vessel annulus (between the reactor vessel wall and the core shroud) using the feedwater spargers via injection using the feedwater system or the high pressure coolant injection (HPCI) system. Low pressure ECC spray is delivered directly inside the core shroud with the two core spray loops. Low pressure ECC flooding capabilities now exist with either a distinct LPCI system or a LPCI mode of RHR. Regardless of the system, the low pressure ECC is delivered to the lower plenum through the recirculation discharge piping.

The UFSARs for two BWR/3 plants, Millstone Point 1 and Dresden 2 & 3, were reviewed for information regarding materials, fabrication techniques, or items related to design importance. The system design similarities and various changes were verified. In addition some material information was obtained and certain fabrication techniques were also verified.

2.2.3 BWR/4 Reactor Type

The BWR/4 plants (see Figure 2-2) have 20 internal jet pumps with single opening nozzles (same as BWR/3 plants). The shroud support design options consist of the flat shroud support plate with either the redundant vertical column supports, the redundant gusset plates, or with neither of the two previous redundant support members but with the horizontal shroud support plate significantly thickened. BWR/4 plants have two access holes, spaced 180 degrees apart, located in the flat shroud support plate.

The BWR/4 plants use either the safety relief valves or the steam condensing mode of RHR for reactor isolation pressure control (a change from BWR/3). Reactor isolation inventory control is achieved using the RCIC system (same as most BWR/3). Shutdown cooling is achieved using the shutdown cooling mode of RHR (same as most BWR/3) and the standby coolant system can provide water to the vessel also using the RHR system (same as most BWR/3). Reactor vessel head spray capabilities are provided using the shutdown cooling mode of RHR (a change from BWR/3).

High pressure ECC is delivered into the reactor vessel annulus (between the reactor vessel wall and the core shroud) using the feedwater spargers via injection using the HPCI system (same as most BWR/3s). Low pressure ECC spray is delivered directly inside the core shroud with the two core spray loops (same as BWR/3). Low pressure ECC flooding capabilities exist with a LPCI mode of RHR with the low pressure ECC delivered into the lower plenum through the recirculation discharge piping. For three late BWR/4 plants, a revised design was incorporated that also floods low pressure ECC directly inside the core shroud through four distinct and separate LPCI loops, part of an RHR operational mode. A straight LPCI coupling routes flow inside the core shroud. A LPCI baffle attached to the inside of the shroud directs flow downward over the top guide.

The UFSARs for two BWR/4 plants, Duane Arnold and Limerick 1 & 2, were reviewed for information regarding materials, fabrication techniques, and items related to design importance. The system design similarities and various changes were verified, especially the four additional LPCI loops to the reactor vessel that were installed only on late BWR/4 plants. In addition, some material information was obtained and certain fabrication techniques were also verified.

2.2.4 BWR/5 Reactor Type

The BWR/5 plants (see Figure 2-3) have 20 internal jet pumps (same as BWR/3 and 4 designs) but the nozzles have five smaller openings rather than just one large opening. The shroud support design options include the flat shroud support plate with either the redundant vertical column supports or the redundant gusset plates. BWR/5 plants have two access holes, spaced 180 degrees apart, located in the flat shroud support plate.

The BWR/5 plants use either the safety relief valves or the steam condensing mode of RHR for reactor isolation pressure control (same as BWR/4). Reactor isolation inventory control is achieved using the RCIC system (same as BWR/4 and most BWR/3). Shutdown cooling is achieved using the shutdown cooling mode of RHR and the standby coolant system can provide water to the vessel also using the RHR system (same as BWR/4 and most BWR/3). Reactor vessel head spray capabilities are provided using the shutdown cooling mode of RHR (same as BWR/4).

In some BWR/5 plants, the dP and SLC lines are concentric and enter the lower plenum area as in previous BWR designs. In other BWR/5 plants, separate lines (through two separate reactor vessel penetrations) are used solely for the detection of differential pressures while the injection of SLC has been routed to the HPCS line.

High pressure ECC is delivered inside the core shroud through one core spray loop using HPCS (a change from BWR/3s and 4s). Low pressure ECC spray is delivered directly inside the core shroud with LPCS through the other remaining core spray loop. Low pressure ECC flooding capabilities exist solely with a LPCI mode of RHR (a change from BWR/3 and early BWR/4 plants) that injects coolant directly inside the core shroud through three distinct and separate LPCI loops as described above.

The UFSARs for two BWR/5 plants, LaSalle 1 & 2 and Nine Mile Point 2, were reviewed for information regarding materials, fabrication techniques, and items related to design importance. The system design similarities and various changes were verified. In addition, some material information was obtained and certain fabrication techniques were also verified.

2.2.5 BWR/6 Reactor Type

Most of the BWR/6 plants (see Figure 2-3) have 20 internal jet pumps (only Grand Gulf has 24) with five smaller openings in the jet pump nozzles (same as BWR/5). The shroud support design options simplify to the flat shroud support plate with just the redundant vertical column supports. Some BWR/6 plants have only one (rather than two) access holes located in the flat shroud support plate.

The BWR/6 plants use either the safety relief valves or the steam condensing mode of RHR for reactor isolation pressure control and reactor isolation inventory control is achieved using the RCIC system. Shutdown cooling is achieved using the shutdown cooling mode of RHR and the standby coolant system can provide water to the vessel also using the RHR system. Reactor vessel head spray capabilities are provided using the shutdown cooling mode of RHR. All of these features are the same as the BWR/4 and 5 plants with the exception that RHR enters the reactor vessel through the feedwater system rather than the recirculation system.

In some BWR/6 plants, the dP and SLC lines are concentric and enter the lower plenum area as in previous BWR designs. In other BWR/6 plants, separate lines (through two separate reactor vessel penetrations) are used solely for the detection of differential pressures while the injection of SLC has been routed to the HPCS line. Regarding the CRD housings in the reactor vessel bottom head, some BWR/6 plants have eliminated stub tubes while other BWR/6 plants still utilize stub tubes.

In the BWR/6 plants, the top guide was redesigned. Instead of the separate rim and intersecting plate design, the top guide for BWR/6 plants was machined from a single piece of stainless steel. The top guide was also bolted in place onto the upper shroud, forming an integral unit. This eliminated the need for alignment pins and the various other wedges and hold down devices that the BWR/2 through 5 plants have. The redundant lateral support brackets which existed on the BWR/2 top guides were also eliminated.

The core plate in BWR/6 plants was redesigned so that tie rods were eliminated, but additional grid support plates were used for stiffeners. Also, the BWR/6 core plate eliminated the alignment pins that BWR/2 through 5 core plates used. BWR/6 plants use wedges and the attaching studs as aligning devices and as lateral restraints.

High pressure ECC is delivered inside the core shroud through one core spray loop using the HPCS system (same as BWR/5). Low pressure ECC spray is delivered directly inside the core shroud with the LPCS system through the other remaining core spray loop (same as BWR/5). Low pressure ECC flooding capabilities exist with a LPCI mode of RHR that injects coolant directly inside the core shroud through three distinct and separate loops (same as BWR/5 and late BWR/4). However, the LPCI coupling has been changed in the BWR/6 design. Instead of a straight component between the vessel wall and the core shroud, the BWR/6 LPCI coupling attaches to the reactor vessel nozzle and turns downward into the annulus. At about the 2/3 core height elevation, the LPCI coupling turns horizontal again and enters the core shroud. A flow diverter inside the core shroud disperses the coolant flow and reduces forces on the in-core instrumentation.

The UFSARs for two BWR/6 plants, Clinton and Grand Gulf, were reviewed for information regarding materials, fabrication techniques, or items related to design importance. The system design similarities and various changes were verified. In addition, some material information was obtained and certain fabrication techniques were also verified.

3. CORE SHROUDS

Many of the reactor internals described in Section 2 are made of materials or fabricated in such a fashion as to be susceptible to intergranular stress corrosion cracking. The largest of the reactor internals is the core shroud. The core shroud is a stainless steel cylinder (304 or 304L) that separates the downward flowing feedwater in the annulus region from the coolant water flowing up through the nuclear core. It interfaces with many of the other reactor internals and provides support and alignment for most of the other reactor internals.

BWR core shrouds provide support for the core plate, peripheral fuel assemblies, the top guide, core spray spargers, the steam dryer assembly, and other reactor vessel internals. A complete 360 degree through-the-wall crack of a core shroud has the potential of allowing fuel assemblies to shift which may potentially prevent control rod insertion, allow core plate movement such that disablement of the SLC system could result, and may even result in separation or lateral shifting of the core shroud itself which could challenge the capability of various ECCS to properly function. The core shroud also provides for a boundary to permit reflooding of the reactor core to a two-thirds core height under accident conditions on BWR/3 and later designs. Therefore, cracking of the core shroud is a major concern to both utilities and the NRC.

This report section describes the recent degradation history of core shrouds, provides an indication of the significant documentation generated to date regarding core shroud cracking, explains the various physical plant modifications being made to a number of currently operating BWRs, and briefly discusses the aging management plans that are being considered by the BWR industry. By definition, significant documentation does not include documents that deal with organizational concerns, action plans, status reports, internal memorandum, meeting summaries, or briefing reports.

3.1 Degradation History and Significant Documentation Related to Core Shroud Cracking

In the late 1970s and 1980s, various reactor internals at different operating BWR plants began to experience cracking problems. These internals, including jet pump hold-down beams, internal core spray piping, and access hole cover plates, were cracked primarily because of IGSCC, a well known time dependent material degradation process caused and accelerated by the presence of corrosive environments, crevices, residual stresses, material sensitization, cold work, and irradiation.

On October 3, 1990, GE issued Rapid Information Communication Services Information Letter (RICSIL) 054, "Core Support Shroud Crack Indications" (GE, 1990). This notice, sent to all owners of GE-designed BWRs, summarized that cracks were found in a core shroud at the KKM BWR plant in Switzerland. This was the first time cracks had been observed in any BWR core shroud. This BWR/4 plant had experienced nearly 16 years of power operation. The cracks were located in the heat affected zone (HAZ) of a circumferential core shroud weld (H4) in the reactor's beltline region (Figure 3-1). Metallurgical samples from this particular core shroud indicated that the cracking was due to IGSCC, promoted by the high neutron fluence (IASCC) and residual stresses. GE recommended that utilities owning BWRs with high-carbon stainless steel (304) core shrouds perform visual examinations of the accessible areas of the shroud welds and HAZ on both the inside and outside surfaces at the next scheduled outage.

During July 1993, the Carolina Power and Light Company (CP&L) performed visual examinations of the core shroud (per RICSIL 054) at Brunswick Unit 1. The examinations revealed numerous cracks in the core shroud. The most extended crack was located on the inside surface of the shroud near the H3

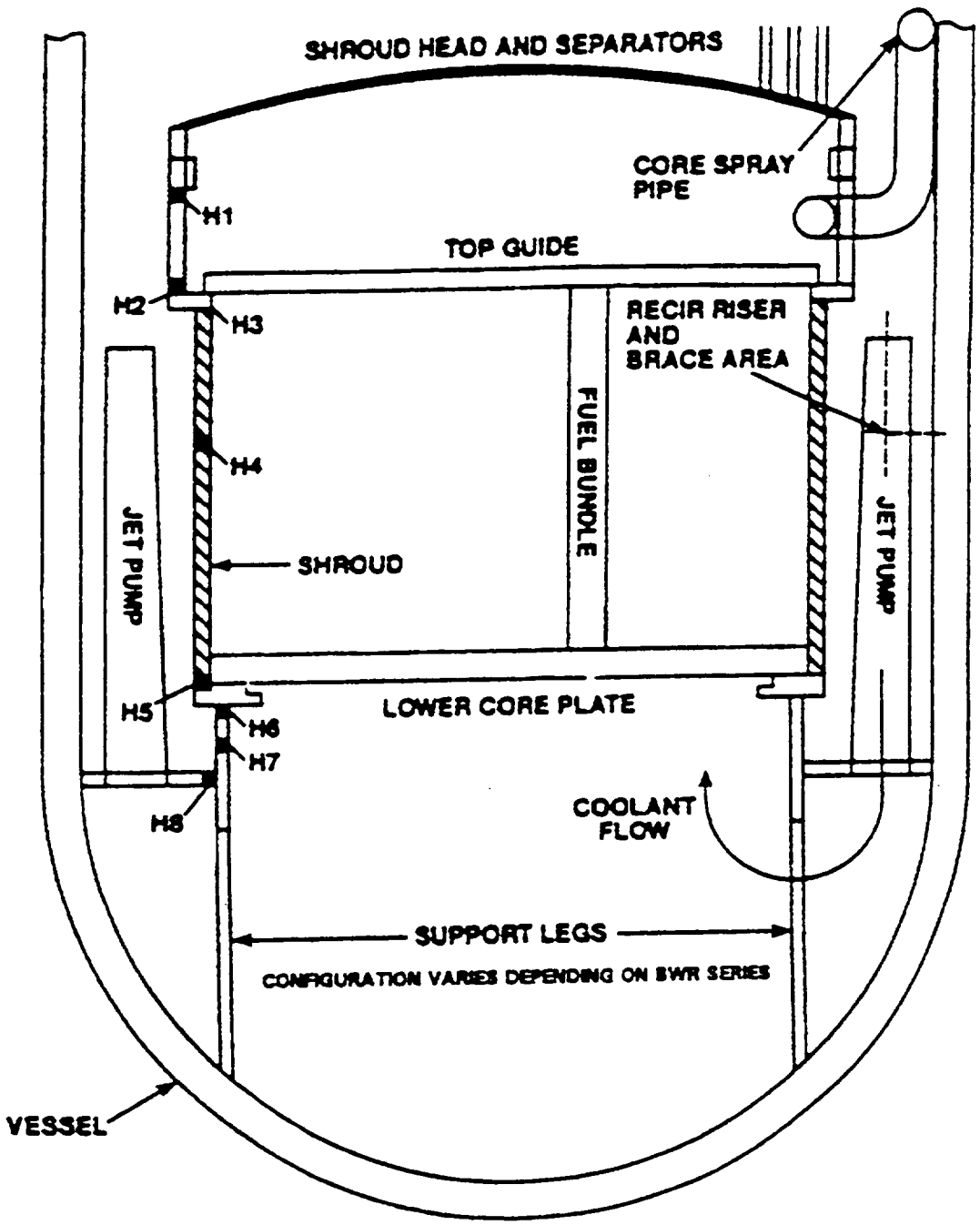

Figure 3-1. Typical core shroud weld locations.

weld (Figure 3-2) in the HAZ and was assumed to extend 360 degrees around the circumference. Ultrasonic testing (UT) measurements indicated that the crack had a depth ranging from 20 to 43 mm (0.8 to 1.7 in.) in depth. As can be seen in Figure 3-2, the crack was located in the top guide support ring which is approximately 7 1/2 in. (19 cm) wide. Boat samples identified IGSCC as the cracking mechanism. In addition, both axial and circumferential cracking, although minor, was observed at the H1, H2, H4, H5 and H6 welds and at the shroud head bolt lugs, eccentric alignment pin, and the bottom of the top guide.

Although GE evaluated the core shroud cracking at Brunswick Unit 1 and determined that adequate structural safety margins would be maintained for the next operating cycle, CP&L decided to implement a plant modification which would ensure structural integrity of the core shroud during normal operating loads as well as design basis accident loadings. A series of mechanical clamps (designed by GE) were installed in early 1994 around the H2 and H3 welds that would provide an alternative load path in case complete through wall cracking occurred at these two welds.

Based on the indications found at Brunswick Unit 1, GE issued RICSIL 054, Revision 1 on July 21, 1993 (GE, 1990). and later issued Service Information Letter (SIL) 572, Revision 1 (GE, 1993a) on October 4, 1993 (closing RICSIL 054 Revision 1). SIL 572, Revision 1 was intended to provide an updated overview of the situation and to recommend additional suitable inspection techniques and frequency intervals to detect potential shroud cracking. During this time interval, the NRC issued Information Notice 93-79, "Core Shroud Cracking at Beltline Region Welds in Boiling Water Reactors" (USNRC, 1993a).

Other crack indications were reported at Peach Bottom Unit 3 in October 1993 but these indications were again at the beltline region or higher. A flaw evaluation was performed and the cracking was determined not to be significant. Operation for another fuel cycle was requested and the NRC agreed with that evaluation. In January 1994, small cracks were found in the Millstone Unit 1 H3, H4,and H5 welds but a flaw evaluation again justified operation for another cycle. In April 1994, ultrasonic inspections of the Hatch Unit 2 core shroud were performed. Cracks were found in welds H1, H2, H3 and H4, all at the beltline or higher. A flaw evaluation determined that the cracking was not significant and operation for another cycle was acceptable. The NRC concurred.

Based on an April 1994 report by GE [GENE-523-148-1193 (GE, 1994a)], the H3 and H4 circumferential weld locations were predicted to be the limiting core shroud welds. The GE report recommended an examination screening criteria that was based on scoping studies of welds H3 and H4 to determine if other core shroud welds needed to be inspected.

During the April 1994 refueling outage at Dresden 3, Commonwealth Edison (ComEd) found a 360 degree crack on the outside surface of the core plate support ring weldment, in the HAZ of weld H5 (Figure 3-3). ComEd also inspected a "sister" plant, Quad Cities Unit 1, and found a similar situation. Boat samples indicated that the maximum crack depth at Dresden 3 was 2.92 cm (1.15 inches) and 2.21 cm (0.87 inches) at Quad Cities Unit 1. Instead of a localized problem, it was now apparent that all regions of the core shroud were susceptible to significant IGSCC. The discovery of extensive cracking in welds other than H3 or H4 brought into question the validity of GE's proposed screening criteria and ranking of shroud welds with respect to cracking susceptibility.

GE issued RICSIL 068, Rev 2 (GE, 1994b) on May 6, 1994. Revision 2 of this RICSIL provided updated metallurgical details of the cracks in core shrouds fabricated from 304L stainless steels. GE also provided insights regarding the adequacy of visual examination procedures and whether ultrasonic examination methods are preferable to visual examination methods under certain circumstances.

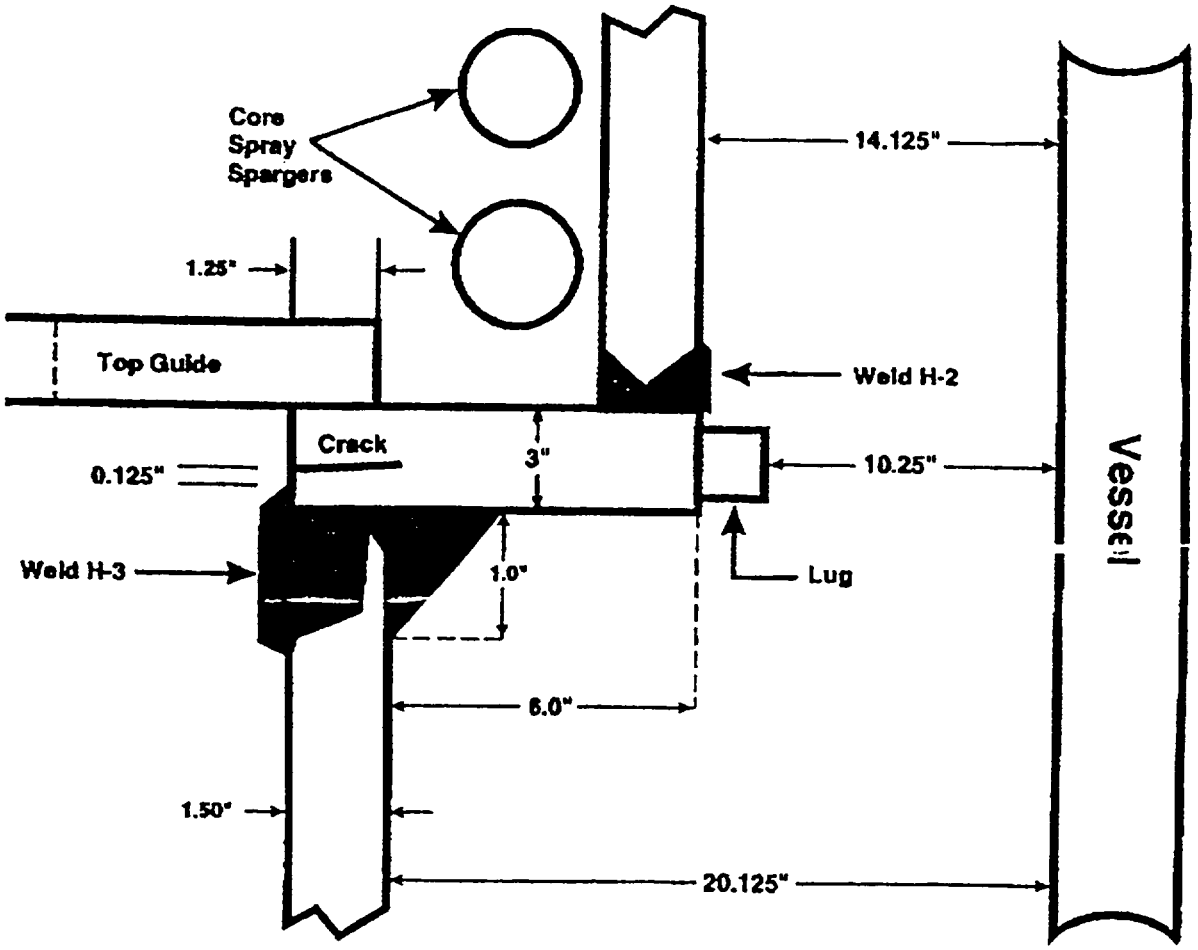

Figure 3-2. Details of Brunswick Unit 1 significant core shroud cracking.

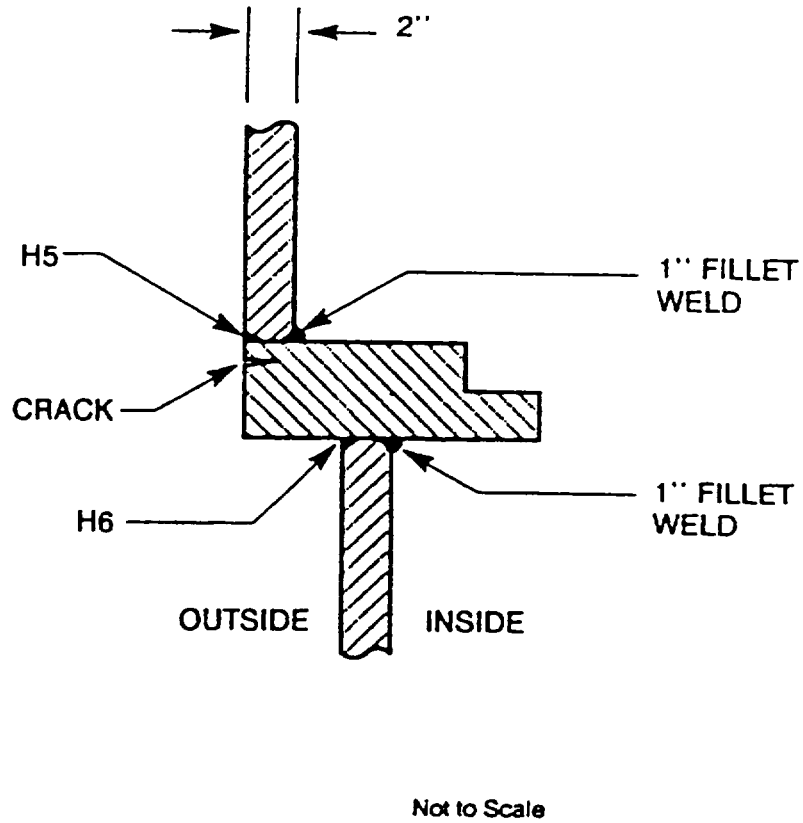

Figure 3-3. Details of Dresden Unit 3 significant lower region core shroud cracking.

The NRC issued Information Notice (IN) 94-42 on June 7, 1994, and a supplement to IN 94-42 on July 19, 1994 (USNRC, 1994a). These notices kept the industry updated on the recent lower-region core shroud cracking developments. However, due to the unanticipated cracking that occurred at Dresden Unit 3 and Quad Cities Unit 1, the NRC deemed that additional inspections at all BWR plants (except Big Rock Point) were necessary to verify that conditions potentially worse than those already identified did not exist at the other plants. Therefore, NRC Generic Letter (GL) 94-03, "Intergranular Stress Corrosion Cracking of Core Shrouds in Boiling Water Reactors" (USNRC, 1994b) was issued on July 25, 1994. As indicated in the letter, "NRC staff therefore considers that 360° cracking of the shroud was a safety concern for the long term based on (1) potentially exceeding the ASME Code structural margins if the cracks are sufficiently deep and continue to propagate during the subsequent operating cycles; and (2) elimination of a layer of defense-in-depth for plant safety." Generic Letter 94-03 requested all holders of BWR operating licenses to (1) inspect the core shrouds no later than the next scheduled refueling outage and perform an appropriate evaluation and/or repair based on the results of the inspection; and (2) perform a safety analysis supporting continued operation of the facility until the inspections were conducted. In the Fall of 1994, both Oyster Creek and Vermont Yankee also reported significant core shroud cracking. Medoff (1996) reports on the NRC staff's assessment (up through September 1995) of plant-specific responses to GL 94-03 and the results of core shroud inspections from many BWRs. Whereas previous cracking was in horizontal welds, cracking in vertical welds was first discovered in 1997 and the NRC issued IN 97-17 (USNRC, 1997b). Two of the BWR/2 vertical welds near the center of the shroud were cracked to a depth of 50 to 80% of the wall for approximately two-thirds of their length.

The BWR Owners Group (BWROG) has been addressing the issue of IGSCC of reactor vessel internals since 1989. Therefore, since the initial discovery, the BWR Owners Group (BWROG) has initiated planning and development activities related to core shroud cracking. The first BWROG submittal to the NRC, "Safety Assessment—BWR Shroud Crack Indications" (BWROG, 1993) was dated November 9, 1993.

In June 1994, the BWR Vessel and Internals Project (BWRVIP) was formed in order for the BWROG to focus its industry resources and become more proactive and aggressive regarding IGSCC of BWR vessels and internals. The goal of the BWRVIP is to resolve the various concerns associated with BWR reactor vessels and internals and to assure the continued safe and reliable operation of the BWR plants. The BWRVIP is organized into five technical committees: (1) Integration (develops overall management strategy), (2) Inspection, (3) Assessment, (4) Mitigation, and (5) Repair. Each of these five technical committees report to a seven member executive oversight committee Since its inception, the BWRVIP has submitted numerous documents for BWROG members and NRC approval. The BWRVIP has established a schedule of submittals whose goal is to ultimately provide an integrated safety assessment of the issue, specify reinspection guidelines and acceptance criteria, and standardize acceptable repair and mitigation efforts. A number of core shroud reports dealing with shroud cracking issues have also been generated by GE.

A notable BWRVIP achievement was the categorization of plants regarding core shroud inspections. A BWRVIP report written by GE, "BWR Core Shroud Inspection and Flaw Evaluation Guidelines" dated March 1995 (GE, 1995b), recommends that BWR plants be grouped in one of three categories ("A", "B", or "C"). The three categories factor in core shroud material, reactor coolant conductivity, and years of hot operation in determining the potential to develop core shroud cracking. Table 3-1 provides more details regarding the definitions of the categories. Basically, older plants with 304 stainless steel (SS) core shrouds are more prone to cracking and are classified as Category "C" with comprehensive inspection recommendations. Category "B" plants are those older plants with 304L SS core shrouds and are tasked with limited core shroud inspections. Finally, the newer plants that are not yet anticipated to have cracking problems are classified as Category "A" plants with no inspection recommendations. A plant's categorization may change as the plant accumulates hot operation time. NRC acceptance of these guidelines was granted via a letter to BWRVIP (Sheron, 1995) dated June 16, 1995.

A significant amount of documentation exists, both generic and plant-specific, which deals with core shrouds and related cracking issues. NUREG-1544 references a large portion of the plant-specific documentation generated up through September 1995. The safety evaluation reports (SERs) written by the NRC staff usually reference additional plant-specific documentation used to perform that safety evaluation. This report has focused its review efforts on the generic documentation. It is believed that the plant-specific documentation typically reflects the criteria, guidance, and philosophies contained in the generic documentation.

Generally speaking, the generic GE, BWROG, and BWRVIP documentation is either providing information to the BWR owners community (through SILs and RICSILs) or developing new procedures, new design modifications or repairs, enhanced inspection methodologies, or determining core shroud responses to various loadings or degradation mechanisms. The NRC documentation also provides information to the general nuclear power industry (through information notices), requests input from BWR license holders to support regulatory concerns (Generic Letter 94-03), or is evaluating the adequacy of the proposed design modifications or repairs, enhanced inspection methods, or new procedures to be implemented at U.S. BWR plants.

Table 3-1. BWRVIP susceptibility rankings and core shroud inspection recommendations

Category	Inspection Recommendations	Plant Characteristics	Plants
"A"	No inspection necessary at this time.	Plants with 304 SS shrouds, < 6 years hot operating time, and avg. conductivities 3 0.030 μS/cm (0.030 μmhos/cm) during the first five cycles of operation.	None
		Plants with 304L SS shrouds, < 8 years hot operating time, and avg. conductivities 3 0.030 μS/cm (0.030 μmhos/cm) during the first five cycles of operation.	Clinton, Fermi 2, Perry, Hope Creek, Limerick 2, Nine Mile Point 2, Washington Nuclear Plant 2, River Bend
"B"	Limited inspection: top guide support ring, core support ring, and mid shroud shell circumferential welds; also the bimetallic weld if accessible.	Plants with 304L SS shrouds. 8 years hot operating time, and avg. conductivities 3 = 0.030 μS/cm (0.030 μmhos/cm) during the first five cycles of operation.	Grand Gulf, LaSalle 1 & 2, Limerick 1, Susquehanna 1 & 2
"C"	Comprehensive inspection: circumferential shroud welds H1 - H7 (and H8 for BWR/2s)	Plants with 304 SS shrouds and . 6 years hot operating time, regardless of conductivity.	Shrouds - welded plate rings Brunswick 1 & 2, Dresden 2 & 3, FitzPatrick, Hatch 1, Millstone 1, Oyster Creek, Nine Mile Point 1, Pilgrim, Quad Cities 1 & 2 Shrouds - forged rings Browns Ferry 1, 2, & 3, Peach Bottom 2 & 3, Vermont Yankee, Monticello, Cooper
		Plants with 304L SS shrouds. 8 years hot operating time, and avg. conductivities > 0.030 μS/cm (0.030 μmhos/cm) during the first five cycles of operation.	Duane Arnold, Hatch 2

3.2 Physical Plant Modifications

All of the BWR plants that discovered circumferential core shroud cracks had to make a decision regarding how continued operation could be justified. Two alternatives were typically available; (1) justify operation for another cycle (or cycles) by analytically demonstrating, using flaw evaluation techniques, that sufficient structural margins still existed or (2) make acceptable modifications to the core shroud itself such that adequate safety margins were restored. The NRC has clarified (Thadani, 1995) that core shroud modifications do not fall under ASME Code, Section XI's definition of repair or replacement. As such, the NRC has considered shroud modifications to be an alternative repair that requires prior approval by the NRC, pursuant to 10 CFR 50.55a(a)(3). In addition, this same NRC letter indicates that the individual BWR licensee is also required by 10 CFR 50.59 to perform an evaluation of

changes made to the facility as described in the UFSAR. If the licensee concludes that an unreviewed safety issue results from a core shroud modification, the licensee must submit an application for amendment of the facility's license pursuant to 10 CFR 50.90.

The modifications performed (or to be performed) at the 15 Category "C" plants are relatively similar except for Brunswick Units 1 and 2. At 13 BWR units, a "tie rod" design was (or will be) installed. GE and MPR have both developed tie rod designs and both designs have been installed in domestic BWRs. The two designs are very similar and both achieve the same effect, namely holding the core shroud intact if a circumferential crack progresses to the through-the-wall stage (complete weld integrity failure). Basically, the tie rod design consists of a long rod that vertically spans the length of the core shroud. It is positioned on the outside of the core shroud in the annulus region between the reactor vessel wall and the core shroud. The upper end of the tie rod is attached at the top of the core shroud and the lower end is attached to the core shroud support plate. Intermediate radial restraints or lateral bumpers provide lateral stability and limit lateral displacement of the core shroud in the event complete circumferential weld failure occurs. Therefore, if any of the major core shroud circumferential welds (typically H1 through H7) cracked completely through, the tie rods provide an alternate load path and keep the entire core shroud intact. Additional wedges may be installed between the core plate and the shroud to prevent relative motion between these two components. For the two Brunswick units, smaller clamps were installed, effectively bridging across two welds (H2 and H3).

The tie rods are installed with a cold preload during installation in order to insure that the assembly of in-line components is vertically tight, with no slack. During operation, additional axial preload is developed due to differential thermal expansion of the shroud (304 or 304L stainless steel) and the tie rod assembly (a combination of Alloy 750 and XM-19, 316, or 316L stainless steel) materials. Although 316 or 316L stainless steel materials have a slightly greater thermal coefficient of expansion than 304 or 304L, the tie rod assembly (as a unit made of different materials) experiences less thermal growth than the core shroud. In combination, the vertical rods and the radial restraints limit the core shroud from excessive vertical or lateral movement. Four GE designed tie rods or four or ten MPR designed tie rods are installed, spaced approximately equally around the circumference.

The installation of these tie rod assemblies is very difficult because the work has to be performed remotely underwater [approximately 23 m (75 feet) away from the working platform positioned over the reactor vessel]. The GE-designed tie rods require four rods to be installed. Significant time is spent beforehand practicing the installation effort on mockups before the trained team actually performs the task at the plant. The installation of ten MPR tie rods at the Oyster Creek plant was relatively easy since it is a BWR/2 plant without jet pumps in the annulus area between the reactor vessel wall and the core shroud. However, installation of the ten MPR tie rods at the FitzPatrick plant, a BWR/4 plant with jet pumps in the annulus space, proved to be more difficult. After the FitzPatrick experience, MPR changed to a four-tie-rod design that was scheduled for installation at Vermont Yankee during the Fall/Winter 1996 outage.

Once the tie rods are installed, the comprehensive core shroud inspections of circumferential welds H1 through H7 are typically discontinued. However, vertical core shroud welds are being inspected. Preliminary evaluations (Sheron, 1994) indicate that the potential for significant vertical core shroud cracking is low due to the use of multiple plates during core shroud fabrication. The worst case vertical crack length is physically limited to the size of the plates and the resulting weld lengths. In addition, a staggered weld pattern was utilized during fabrication to avoid alignment of vertical welds. To date, significant vertical cracking of core shrouds has not been observed. Therefore, the NRC is not currently addressing vertical cracks in core shrouds.

Brunswick Unit 1 was the first domestic BWR to observe significant cracking in a core shroud. The resulting core shroud modifications performed at both of the Brunswick units were not as inclusive as at other plants. The tie rod design extends from the top of the core shroud to the bottom of the core shroud. The focus of the Brunswick modification was at the significant crack locations, circumferential welds H2 and H3. GE designed clamps (12 per shroud) that basically provided an alternative load path if either H2 or H3 progressed to a through-the-wall crack stage. Since the clamp modifications only cover the H2 and H3 welds, Brunswick must still justify operation for each upcoming fuel cycle if and when significant cracking at other circumferential core shroud welds is detected. If tie rods were to be installed in the Brunswick units, comprehensive core shroud inspections of all circumferential core shroud welds could be discontinued after NRC approval of the modification is obtained.

The NRC has also clarified (Sheron, 1995) the importance of inspecting those critical load carrying welds made during core shroud modifications. However, the BWRVIP has not yet generated approved guidelines for these types of examinations.

Core shroud cracking has also been detected on Japanese BWRs. The Tokyo Electric Power Company elected to remove the Type 304 stainless steel core shroud at the Fukushima-Daiichi Unit 3 plant and install a Type 316L replacement (Matsumoto, 1999). The new core shroud consists of three forged Type 316L cylinders with no vertical welds, and a lower Alloy 600 ring with two vertical welds. This type replacement is planned at several Japanese BWR plants.

3.3 Aging Management Plan

The long term management of the core shroud cracking issue rests with the BWRVIP with NRC oversight. Currently, six options are available to the BWR community: (1) continue comprehensive examinations of the core shrouds as necessary to justify continued operation, (2) physical modification of the core shrouds to restore adequate safety margins, (3) replacement of the core shroud, (4) improving water chemistry, (5) use of special coatings to slow or eliminate the IGSCC mechanism, and (6) cladding of susceptible welds or areas to reduce or eliminate the IGSCC mechanism. The first three options are alternate solutions to the existing BWR internals cracking problem. However, the driving mechanism of IGSCC is not reduced or eliminated unless a complete core shroud replacement uses significantly different fabrication processes. The last three options are mitigation methods that have been developed to reduce or eliminate the IGSCC driving mechanism.

Actual repair of the core shroud cracks (grinding out the flaws and rewelding) is not deemed to be a reasonable option due to a number of problems including difficult access, added exposure to workers, and in-situ welding still resulting in sensitized welds. At best, these types of weld repairs appear to be a short term solution which would still require comprehensive examinations at every refueling outage.

The first two management options have already been discussed above. Some plants continue to operate based on examinations performed as necessary and analytical evaluations that demonstrate adequate strength remains in the core shroud to properly function during all design loading conditions. Other plants have opted for the physical modification of the core shroud to restore adequate safety margins. The third option (replacement) has been performed in Japan.

The last three options are mitigation efforts believed to be reasonably cost effective under the right circumstances. The fourth option involves changing those plants over to hydrogen water chemistry (HWC) that have not already done so. GE believes that HWC is the first step toward the mitigation of core shroud cracking, especially in the lower plenum areas. HWC reduces the electrochemical potential (ECP) of stainless steel materials. It is believed that HWC can eliminate the initiation of IGSCC and can also significantly reduce or fully suppress future crack growth at existing crack locations. The downside

of HWC is the increase of radiation levels, either ^{16}N in the coolant or cobalt-60 or zinc-65 deposition on the inside surfaces of the recirculation piping.

The last two options deal with the use of noble metals and are being currently developed by GE. Option five involves the application of a doped powder that results in a coating or layer of material that includes the noble metal palladium. Basically, an in-situ spray technique using an underwater plasma arc can apply a very thin 0.15 mm (0.006 in) coating over the surface of materials requiring protection. The advantages are that this thin coating (not a barrier) closely behaves like pure palladium or platinum. The coating lowers the ECP of the primary coolant, and provides a catalyst for recombining surface O_2. As a result, HWC efficiency improves because lower levels of H_2 injection are required and better resistance to IGSCC is achieved. In addition, a lower level of primary coolant radiation results.

The last option involves the GE development of a noble metal cladding technique where a fused welded cladding (doped with palladium) is applied using an underwater plasma transferred arc process. The resulting cladding (a barrier) seals the material surface from the environment and has the added benefit of improving the existing residual stresses by reducing tensile stresses and creating more compressive stresses. As indicated above, the noble metal (palladium) in conjunction with the HWC environment provides the highest resistance to IGSCC.

4. OTHER IGSCC-AFFECTED REACTOR INTERNALS

In addition to the core shroud, about a dozen other reactor internals have experienced IGSCC degradation to date. As discussed in Section 1, a number of factors can assist IGSCC crack initiation and growth. Higher average electrical conductivity of the coolant typically promotes more rapid IGSCC. The heat-affected zone from welding, high stresses (for example, residual or from stress concentrations), the presence of crevices, and cold-worked material also contribute to IGSCC. High neutron cumulative fluxes, typical of components in the core region, promote IASCC.

The safety significance is generally component specific. However, a common safety significance is a loose part which can result from IGSCC. There are three basic safety consequences:

- a loose part can inhibit control rod motion
- a loose part can block or partially block a coolant flow channel
- a large loose part can impact adjacent components and impair their function.

Some other safety consequences not associated with loose parts which could be caused by damage to any of several reactor internals components could:

- increase coolant leakage between plenums
- damage emergency coolant or shutdown systems
- damage control rods or prevent their motion
- cause a reactor coolant system leak.

This section describes the purpose, description, degradation history, safety significance, and aging management plans for other reactor internals that have experienced degradation to date. Inspection methods have been developed for these components, and the areas that are more easily accessible, or components that can be removed from the vessel, have been inspected more than the relatively inaccessible components, primarily located near the bottom of the vessel. Components located underneath the core plate, such as the core shroud support and the control rod guide tubes, have received only limited inspections, e.g., portions of the SLC system can be inspected when the jet pumps are disassembled for repair.

These instances of degradation are summarized in chronological order in Table 4.1. In a few cases, plants have reported indications not necessarily confirmed as IGSCC that are included. The table lists the component, the general location within the component that the degradation was detected, the year that IGSCC was first reported for that component, plants that have reported IGSCC for the component, the component material, factors that may have contributed to the IGSCC, and the GE SILs or RICSILs that have been issued to alert utilities to degradation of the component. Degradation of other reactor internals, such as steam dryer drain channels and jet pump sensing lines has been observed, but since the mechanism was primarily fatigue rather than IGSCC, they have not been listed in the table. Leakage from stub tubes or bottom head instrumentation is also not included. Most of the degradation details listed in Table 4-1 were obtained from NRC Bulletins and NRC Information Notices. In addition, information from the S. M. Stoller Corporation, *Nuclear Plant Experience*, Sections BWR-2, II. Reactor Internals, III. Reactor Vessel, and IV.A Control Rods (Stoller, 1995) was used.

Table 4-1. History of IGSCC in other BWR reactor vessel internals.

Components	Location	Date First Detected	Plants	Material	Contributing Factors	GE SIL (RICSIL)
Neutron IRM/SRM	In-core housing	1974	Oyster Creek, Quad Cities 1, Nine Mile Pt. 1	Alloy 600, Type 304 SS		
Neutron source holder	Near top of beryllium chamber	1974	Big Rock Point, Peach Bottom 2, Millstone 1	Type 304 SS	IASCC	215-R1
Core spray piping and sparger elbows, tee-box, sleeve/coupling, thermal sleeve, collar, brackets	Horizontal piping, vertical piping	1978	Oyster Creek, Quad Cities 1, Millstone 1, Pilgrim, Peach Bottom 2 & 3, Dresden 2 & 3, Brunswick 1 & 2, FitzPatrick, Browns Ferry 2 & 3, Hatch 1 & 2, Monticello, Susquehanna 1 & 2	Type 304, 304L, or 316 NG SS	Crevices, cold work, weld HAZ	289-R1, S1-R1
Control rods handles	Blade sheaths,	1979	Millstone 1, other domestic and overseas	Type 304 SS	Crevices, IASCC B_4C swelling	157-R2
Jet pump	Holddown beam ligament	1980	Dresden 2 & 3, Quad Cities 1 & 2, Pilgrim, Millstone 1, Vermont Yankee, FitzPatrick, Clinton, Hatch 1 & 2, Peach Bottom 3	Alloy X-750	Stress concentration at bolt threads	330, 330-S1, (065)

Table 4-1. (continued).

Components	Location	Date First Detected	Plants	Material	Contributing Factors	GE SIL (RICSIL)
Neutron IRM/SRM dry tubes	Welds at upper end	1984	Browns Ferry 1, 2, & 3, Dresden 2 & 3, FitzPatrick, Oyster Creek, Peach Bottom 3	Type 304 SS	IASCC, crevices	409-R1 (073)
Steam dryer	Support ring, brackets, dryer	1985	Susquehanna 1, 8 other domestic	Type 304 SS	Cold work	
Core shroud head bolts	Weld joining collar to bolt	1986	Brunswick 2, Fermi-2, others	Alloy 600 (bolt) Type 304 SS (collar)	Crevices	433
Core shroud support plate	Access hole cover plate welds	1988	Peach Bottom 2 & 3, Quad Cities 1 & 2	Alloy 600 (plate) Alloy 182 (weld)	Crevices	462-S3
Jet pump	Riser support brace	1989	Monticello, Peach Bottom 3, Quad Cities 1		Primarily fatigue, IGSCC possible contributor	551
Top guide	Cross beam (non-weld)	1991	Oyster Creek	Type 304 SS	IASCC, crevices	
Jet pump hold-down beam	Transition between main body and end	1993	Grand Gulf	Alloy X-750		(065)
Top guide, core plate	Ring weld in rim area	1994	German (non-GE)	equivalent to AISI Type 347 SS	Crevices, IASCC	(071), 588-R1 (top guide only)
Core shroud support	Support ring to support weld	1995	Nine Mile Pt. 1, Overseas BWR	Alloy 600, Alloy 182	Crevice, weld HAZ	
Jet pump riser	Riser to thermal sleeve weld	1996	overseas BWR, LaSalle 2, Dresden 2, Brunswick 1, Hatch 1	Type 304 SS	Some are indications not confirmed as IGSCC	605

SCC in a number of components has been associated with IASCC. The components within the reactor vessel that have experienced IASCC cracking to date are summarized in Table 4-2. Many of these cases have already been mentioned in Table 4-1, but some additional components are also included.

A summary of the aging management plans for these components is given in Table 4-3. Some of the aging management methods are generic for many components, and therefore are not discussed in detail. Volumetric inspection methods have been developed for some of the smaller and more accessible components, while visual inspection methods, sometimes with the assistance of underwater cameras, can be used for all components. In situ visual inspections for all locations of all components are difficult at best, and at the most remote locations, techniques have not yet been fully developed. Hydrogen water chemistry will potentially benefit those components in the water (lower) region, such as the shroud support, but is ineffective in the steam (upper) region, such as the steam separators. Monitoring of electrochemical potential (ECP) to assist in achieving better water chemistry control by lowering conductivity can help mitigate the potential for IGSCC. Coupons with simulated IGSCC cracks have been placed in a few reactor vessels to monitor crack growth in the same environment the actual components are experiencing.

The following sections describe the components for which degradation has been detected to date, and that are listed in Table 4-1, with the exception of the jet pump riser brace, for which fatigue was the major degradation mechanism, and IGSCC was only a possible contributing factor.

4.1 Top Guide

4.1.1 Purpose

The top guide provides lateral support for the upper end of all fuel assemblies, neutron monitoring instruments and the installed neutron sources, and maintains proper spacing of the upper ends of the fuel assemblies (and proper alignment of the control rods also).

Table 4-2. Reactor vessel internals that have experienced IASCC.

Component	Material
Fuel cladding	20Cr-25Ni-Nb
Neutron source holders	Type 304
Instrument dry tubes	Type 304
Control rod absorber tubes	Type 304
Fuel bundle cap screws	Type 304
Control rod follower rivets	Type 304
Control rod handle	Type 304
Control rod sheath	Type 304
Control rod blades	Type 304
Bolts (BWR and PWR)	Alloys 600, X-750, and A-286T
Top guide	Type 304
Jet pump hold-down beams	Alloy X-750
Springs (BWR and PWR)	Alloys X-750 and 718
Core shroud beltline region	Type 304

Table 4-3. Aging management.

Component	Volumetric Inspection	Visual Inspection	Hydrogen Water Chemistry	Repair	Replacement
Top guide	UT	X	X	X	X
Core plate		X	X	X	X
Jet pump beams	UT,ET	X	X		X
Jet pump inlet riser		X	X		X
Access hole cover	UT	X	X	X	X
Core spray	UT	X	X	X	Portions
Core shroud head bolts	UT	X		BWR/6	X
IRM/SRM dry tubes		X	X		X
Neutron source holder		X			Remove
Control rod blades		X	X		X
In-core housing	UT,ET	X	X	X	X
Core shroud support	UT (portions)	Portions	X	X	X
Steam dryer support ring	UT	X		X	

Table Notes:

UT—ultrasonic testing; ET—eddy current testing

4.1.2 Description

The top guide is a lattice assembly (Figure 2-31) that is set on a rim near the top of the core shroud in BWR/2 to BWR/5 plants, and is bolted into place as shown in Figure 2-26. In the BWR/2 to BWR/5 plants, the top guide is formed by a series of Type 304 stainless steel plates joined at right angles by means of vertical slots (no welds) to form a matrix of square openings. The beams are welded to a peripheral ring. In BWR/6 plants, the entire top guide, called the grid, is machined from a solid plate to give a crevice-free design. The top core shroud section on BWR/2 to BWR/5 designs, which includes the core shroud flange and the H1 through H3 weld regions, is replaced on the BWR/6 design by the top guide grid, which is bolted to the core shroud. Section 2.1.13 provides more details of the differences in top guides designs.

Each central opening accommodates four fuel assemblies and one control rod. Along the periphery, there are smaller openings that accommodate peripheral fuel assemblies. Holes drilled in the bottom edge of the top guide at the junction of the cross plates support the top end of the neutron instrument assemblies and neutron source holders. The top guide is aligned by positioning pins that fit into slots in the top of the core shroud. It rests on the top guide support ring of the core shroud.

There are five basic top guide restraint designs:

- BWR/2

- aligner pin assemblies only (BWR 3/4)
- aligner pin assemblies plus reinforcement blocks (BWR 3/4)
- aligner pin assemblies plus wedges (BWR 4/5)
- BWR/6

The type of restraint design can be important in the safety significance of IGSCC cracking of the top guide.

4.1.3 Degradation

Minor cracking not associated with a weld (three cracks midspan) was observed in a cross beam of the top guide of the Oyster Creek BWR/2 in 1991 (USNRC, 1995). Subsequent monitoring and assessment of the cracking showed that the structural integrity of the top guide was maintained. Crack-like indications at the bottom of the Brunswick Unit 1 top guide were observed in 1993 during an in-vessel visual inspection performed per RICSIL 054.

Significant cracking was visually observed in the top guide of the Wuergassen KWW (German, non-GE design) BWR plant in 1994 (USNRC, 1995). The cracks were circumferentially oriented along the weld regions and were located in the rim areas of the top guide (Figure 4-1). GE-designed BWRs have similar welds in areas that were cracked in the overseas BWR. The overseas BWR top guide material was Type 347 stainless steel instead of Type 304 used in GE-designed BWRs. In response, GE issued RICSIL 071 (GE, 1994c), informing U.S. utilities that there were enough similarities between the design of the foreign BWR and GE-designed BWRs to warrant an investigation to determine whether other BWR top guides would be similarly affected by IGSCC. In response to an NRC request, the BWRVIP group forwarded two submittals to the NRC (BWRVIP, 1994 and 1995) assessing the significance of top guide cracking. GE subsequently issued SIL 588 (GE, 1995a), discussing the safety significance of the cracking and providing specific recommendations for inspection.

All but the BWR/6 design have crevices, and all BWR top guides have high neutron fluences, making the component susceptible to IASCC/IGSCC. Gerber (1986) identifies the neutron monitoring instrument slot at the bottom beam of the top guide as a critical location from an IASCC standpoint. A fracture mechanics analysis of a BWR top guide subject to seismic loading concluded that an IASCC crack larger than 76 mm (3 in.) would have to be present in the center of the top guide at a slot on the bottom of the lower beam before failure would occur.

The NRC considers that it is reasonable to expect that U.S. BWR/2 through 5 top guide design ring welds may experience IGSCC during their lifetimes (Medoff, 1996). This is partially based on the experience at Wuergassen (13 years operating experience, moderate conductivity water chemistry). Ring weld cracking is not considered to be an issue for BWR/6s.

4.1.4 Safety Significance of Cracking

The most significant safety concern is that IGSCC cracking could result in failure of the control rods to fully insert during a design-basis loading such as a seismic event or main steam line break LOCA. There is also a remote possibility of the development of loose parts within the reactor core.

For an intact top guide, the BWRVIP (BWRVIP,1995) asserts that vertical seismic plus operating dP pressure loads would not overcome the weight of the top guide. If complete ring cracking is assumed,

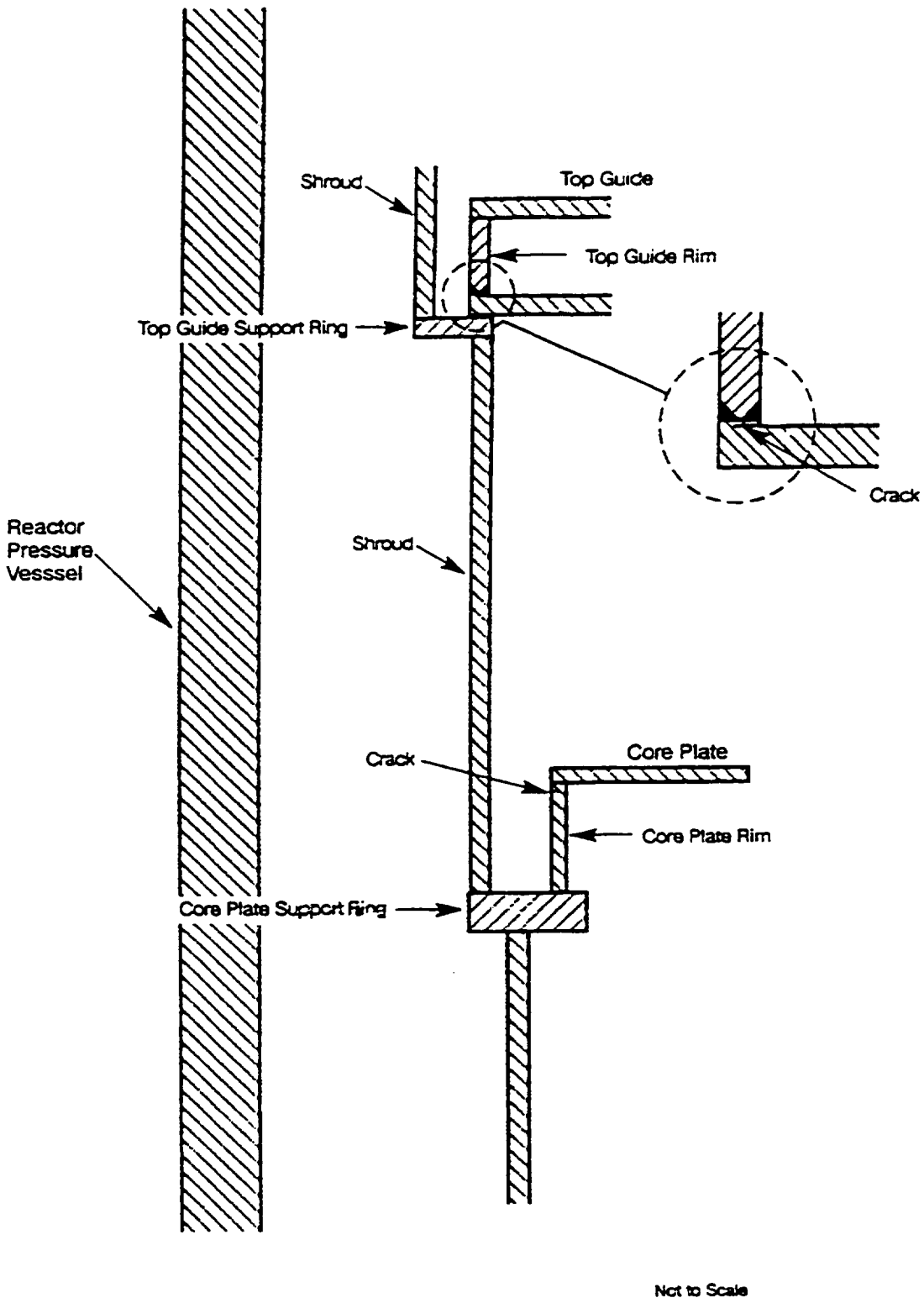

Figure 4-1. Location of cracking in top guide and core plate of overseas BWR.

the top guide assembly would still react vertical loads as a single, effectively intact component, because there are about 200 welded pins connecting the top plate of the top guide to the bottom plate through the beam connections. Therefore, the BWRVIP considers that the ring weld cracking in the overseas BWR raises no new concerns relative to vertical top guide displacement. The NRC has evaluated the information supplied by the BWRVIP and has concluded that the vertical displacement associated with a cracked top guide during a design-basis loading is bounded by analyses performed during the core shroud assessments (Medoff, 1996).

The lateral displacement potential depends on the five design configurations listed above. The BWRVIP states that for BWR/2, BWR/6, and BWR/4,5 plants with wedges (20 plants), there is either no, or an extremely unlikely, possibility that a cracked top guide would displace during a seismic event. For the remaining 16 BWRs, where the lateral loads are reacted by four aligner pins, IGSCC of the aligner pins might affect safety for a horizontal seismic load. However, multiple aligner pins would have to fail since they all share the lateral load.

In the event of failure of the control rods to insert or the existence of loose parts, the reactor would still be protected by the standby liquid control (SLC) system. Loose parts could damage the core instrumentation system.

4.1.5 Aging Management

Based on experience to date, it is expected that instances of IGSCC/IASCC will occur in top guides. Crack progression does not appear to result in rapid deterioration of top guides. Consequently, the current near-term General Electric and BWRVIP recommendations are to perform periodic inspections to verify top guide integrity (GE, 1995a). Because of the comparatively accessible location of top guides, visual inspections are relatively uncomplicated. Localized repair options are available, but plans for top guide replacement have not been fully developed since no near-term safety consequences appear likely.

As the top guides absorb cumulative neutron fluences, the effects of IASCC/IGSCC will progress more rapidly when the damage threshold is exceeded. Therefore, an aging management plan for this component is needed. Estimates for the time of reaching the threshold for each operating BWR should be prepared, and an enhanced inspection program should be developed when the threshold is reached, based on the type of BWR design.

4.2 Core Plate

4.2.1 Purpose

The safety function of the core plate is to provide lateral support and positioning for the control rod guide tubes, which in turn support the fuel assemblies, such that control rods can be inserted and the core can be cooled following an accident. Orificed fuel support pieces and in-core neutron monitor guide tubes between fuel assembly locations are also held in place by perforations in the core plate. In addition, the core plate provides a barrier to direct the upward reactor recirculation flow through the core.

4.2.2 Description

The core plate typically consists of a 51-mm (2-in.) thick circular, horizontal, Type 304 stainless steel plate with CRD guide tube holes about 279 mm (11 in.) in diameter (Figure 2-21). A cylindrical rim is welded under the plate (full penetration), and the rim-plate structure is reinforced underneath with a grid work of stiffener members, consisting of vertical plates cross-braced with tie rods (except for the

BWR/6 design). The grid support beams are fillet-welded to the top plate at regular intervals. The tie rods are fillet-welded to the grid support beams through holes in the top plate, and the other end is attached to the rim at the periphery of the top plate. In the BWR/6 design, the tie rods were eliminated and replaced by additional support beams.

The core plate is secured to the core plate flange on the shroud by multiple (from 36 to over 70, depending on the design) preloaded stainless steel studs in all operating BWRs in the U.S. The preloaded studs provide a large compressive load holding the core plate in place relative to the shroud. Alignment pins (typically 4) on the core plate (except for BWR/6s) engage slots in the shroud to correctly position the core plate before it is secured.

4.2.3 Degradation

Significant cracking was visually observed in the core plate of the Wuergassen KWW (German, non-GE design) BWR plant in 1994 (USNRC, 1995). The cracks were circumferentially oriented along the weld regions and were located in the rim areas of the core plate (Figure 4-1). GE-designed BWRs have similar welds in areas that were cracked in the overseas BWR. The overseas BWR core plate material was Type 347 stainless steel instead of Type 304 used in GE-designed BWRs.

Although no cracking has been detected at this location, the beam-to-plate welds are potential IGSCC sites because of the creviced geometry.

4.2.4 Safety Significance of Cracking

The BWRVIP (BWRVIP,1995) states that the preloaded studs around the plate perimeter provide a large compressive load holding the core plate in place relative to the shroud. Therefore, friction between the core plate rim and the core plate ring support should be sufficient to prevent lateral motion of the machined surfaces during a seismic event. The friction factor of a stress-corrosion crack in the rim weld would be significantly higher, so even assuming through-wall cracking of the rim weld, the BWRVIP asserts that the core plate would maintain its full design capability to resist displacements due to vertical dP pressure and seismic loads due to lateral seismic loads.

Vertical displacement of the core plate during design basis loading is limited to 13 mm (0.5 in) due to the clearance between the core support plate and the fuel support structures (Medoff, 1996). Although highly unlikely because all the preloaded hold-down bolts would have to fail, should there be lateral movement of the core plate that inhibits control rod motion, the SLC system would be available to shut down the reactor in some plants. However, most plants have the SLC system located beneath the core plate or supported from the core plate, so significant core plate movement could potentially limit or eliminate SLC system flow.

4.2.5 Aging Management

The aging management plans for core plates are similar to those for top guides. Based on experience to date, it is expected that instances of IGSCC will occur in core plates. Crack progression does not appear to result in rapid deterioration of core plates. Consequently, the current near-term General Electric and BWRVIP recommendations are to perform periodic inspections to verify core plate integrity (GE, 1995a). Core plates are not as accessible as top guides, and inspection programs are not as developed or comprehensive as for top guides. Localized repair options are available, but plans for core plate replacement have not been fully developed since no near-term safety consequences appear likely.

4.3 Jet Pump Hold-Down Beams

4.3.1 Purpose

The jet pump hold-down beams are part of a beam-bolt lock subassembly at the upper end of the jet pump assemblies that allow the inlet elbow/mixing assembly sections (sometimes called the ram's head) to be removed for inservice inspection, and accommodate vertical thermal expansion of the jet pump. For each inlet riser, there are two hold-down beams, one for each of the two diffuser sections. The beam-bolt assembly mechanically clamps the inlet elbow/mixing assembly section to the inlet riser subassembly with a force approximately three times the upward pressure forces during operation. This also is to ensure minimal leakage at the joints between the subassemblies. The upper end of the inlet elbow has a spherical shape which rests in a conical hole in the transition piece casting. The lower (discharge) end of the mixer is slip fit into the diffuser. A wedge and restrainer provides lateral support to the mixing assemblies. The diffuser is welded to the core shroud support (baffle) plate at the lower end.

4.3.2 Description

Jet pump hold-down beams (Figure 4-2) are trapezoid-like in shape, with ends that fit into pockets in the jet pump riser transition pieces. They weigh about 66 kg (30 lb), are about 30 cm (1 ft) long, with thicknesses of 51 mm (2 in) at the center and 25 mm (1 inch) at the ends.

The beams are made of Alloy X-750, a precipitation-hardened, nickel chromium alloy. The original design called for the material to be equalized at 885°C (1625°F) for 24 hours, and aged at 704°C (1300°F) for 24 hours. In the late 1970s it was discovered that material formed with this heat treatment was susceptible to IGSCC, so the heat treatment was changed to anneal at 1093°C (2000°F) for 1 hour, and age at 704°C (1300°F) for 24 hours. The design was also changed to included a larger beam cross-section (BWR/4 and later designs), and GE recommended that the bolt preload be reduced from 133.5 to 111.2 kN (30,000 to 25,000 lb). Currently operating plants have a combination of designs and heat treatments.

4.3.3 Degradation

The first instance of IGSCC failures in jet pump beams was at the Dresden 3 plant in 1980. An IGSCC crack developed in the ligament where a bolt penetrated the top of the beam (Figure 4-2). The crack progressed through the beam, with the final failure probably occurring because of fatigue. The stress concentration from the bolt hole and threads contributed to the crack initiation.

Visual and ultrasonic testing (VT and UT) examinations of other beams at Dresden 3 and other operating BWRs revealed several similarly cracked beams. The NRC issued Inspection and Enforcement (IE) Bulletin 80-07 alerting licensees of the failure, and requiring visual and UT examinations of the jet pump beams in all applicable domestic BWRs (USNRC, 1980a). The IE Bulletin also required initiation of improved surveillance procedures to ensure timely detection in case of further failures. GE issued SIL 330 (GE, 1980) to recommend surveillance methods to licensees and provided a supplement to that SIL on February 1, 1981. The IE Bulletin was closed with the issuance of NUREG/CR-3052 in 1984 (Dean et al., 1984). It was thought that only the BWR/3 design would crack, that the new BWR/4 through BWR/6 design would preclude cracking, and that cracks would progress very slowly though the beam. However, in 1993 UT inspections of the Clinton (BWR/6) hold-down beams revealed that one had crack indications around the center of the bolt hole region (USNRC, 1993b). In addition, it was discovered that some Grand Gulf (another BWR/6) beams showed crack indications in the bolt hole region.

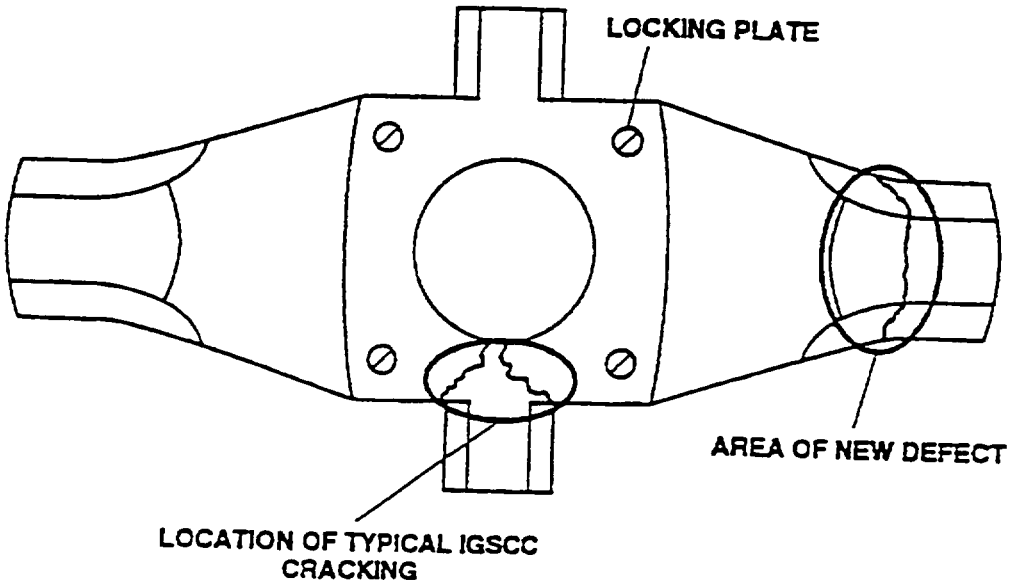

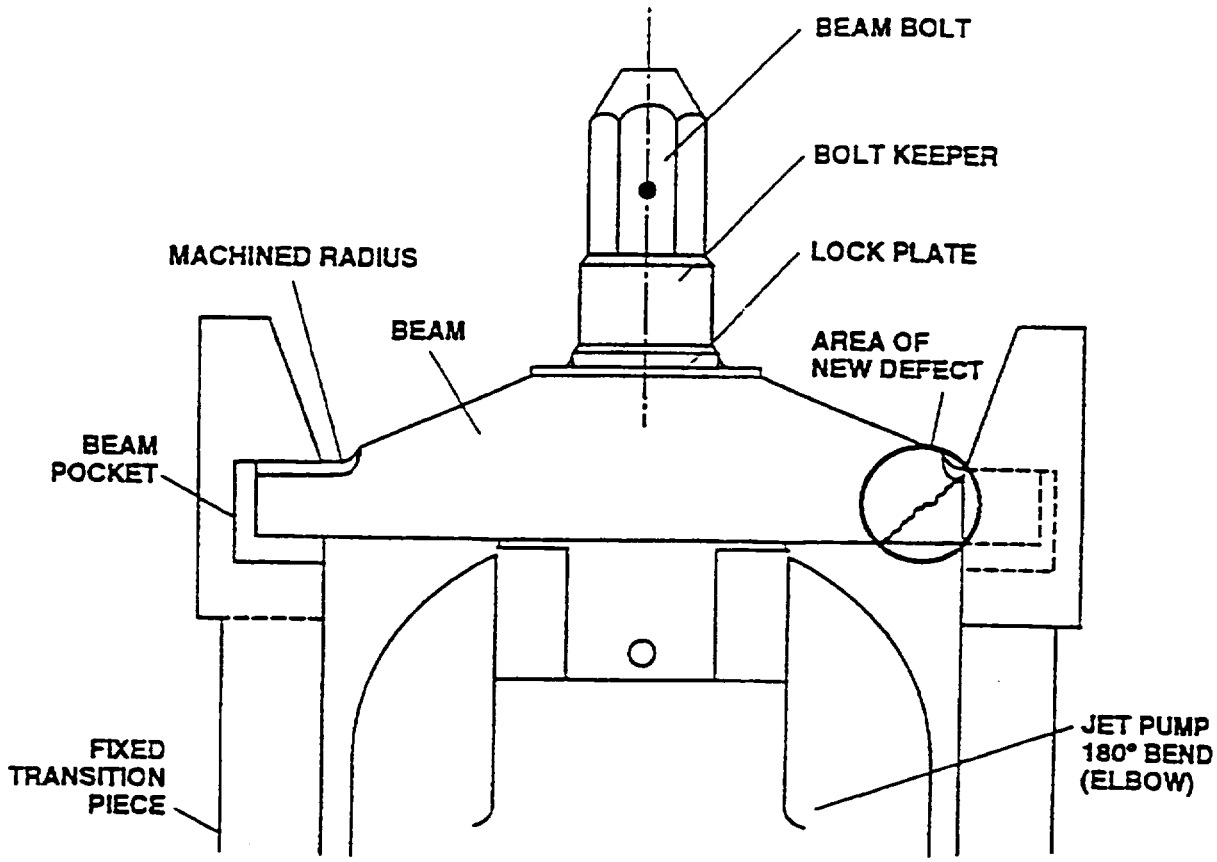

Figure 4-2. Location of cracking in jet pump hold-down beams.

In 1993, Grand Gulf (BWR/6) experienced an unplanned high pressure core spray initiation that resulted in a scram (after eight years of operation). Following reactor shutdown, the licensee found that the mixer assembly for one of the jet pumps had separated from the diffuser and relocated. The cause was a cracked hold-down beam, but the failure location was unlike the previous cases. The crack was in the transition area between the main body of the beam and the end (Figure 4-2), not at the central hole area (USNRC, 1993b). One end of the beam failed completely, causing the jet pump to disassemble (five initiation sites that fused into a single crack was identified). The other end had a crack face covering more than 270 degrees of the cross section of the beam end (two initiation sites were identified). The cracks began in an area where a radius machining cut had been made in the forging. The IGSCC crack at the failed end covered over 80% of the fracture surface, with fatigue striations covering the remainder. No crack indications were identified in the previous visual inspection, including a video tape review of the previous inspection that was conducted after the failure to recheck the assessment. It appeared that a crack could propagate through the beam in less than one full operating cycle. The licensee examined other jet pump hold-down beams and found crack indications at the center bolt hole area on two other hold-down beams, consistent with that described in IE Bulletin 80-07. The NRC issued Information Notice 93-101 to alert licensees to this failure. In addition, GE issued RICSIL 065 (GE, 1993b) which recommended that plants with similar designs replace their beams after eight years of accumulated service.

4.3.4 Safety Significance of Cracking

For a completely cracked and failed jet pump hold-down beam, the jet pump inlet mixer subassembly will lift from the diffuser at the slip fit connection, disassembling the pump (Figure 4-3). This can cause unbalanced jet pump loop flow and a reduction in the overall core flow capacity, which may reduce the margin of safety for emergency core cooling for postulated accidents such as the anticipated transient without scram (ATWS). The disassembly of a jet pump may result in an increased flow area through the jet pump and a lower core flooding elevation. This could adversely affect the water level in the core during the reflood phase of a loss-of-coolant accident (LOCA).

A loose part and the accompanying safety consequences are also possible. It would be difficult for the beam to migrate into the core, and the loose parts from past failures have been recovered in the annulus region. However, a disengaged mixer assembly could impact the core spray (including LPCS and HPCS), LPCI, or feedwater systems. In some BWR/5 and BWR/6 plants, damaging the core spray or HPCS could also eliminate functionality of the SLC system.

4.3.5 Aging Management

GE recommended that increased visual inspection be initiated in response to IE Bulletin 80-07, based on the premise that the cracks progress slowly. For the original cracked BWR/3 beams, GE recommended several design changes. Replacement beams received High Temperature Anneal (HTA) heat treatment during manufacture rather than the original Equalized and Aged heat treatment. BWR/4 and later beams have a larger cross-section than BWR/3 beams so the stresses are less. In additional lower preloads can be used to reduce stresses. Cracked beams are replaced. Surveillance methods, such as core flow balance tests as required by the plant technical specifications, are also used to determine flow anomalies that may indicate a cracked hold-down beam.

With regard to the Grand Gulf beam failure, GE recommended that licensees replace the beams if (1) the beams are of the same design as Grand Gulf and (2) the beams have more than eight years of accumulated service. The aging management plan developed for the previous failures at the bolt hole is inadequate for failures at the transition region near the ends of the beams such as that found at Grand Gulf in 1993.

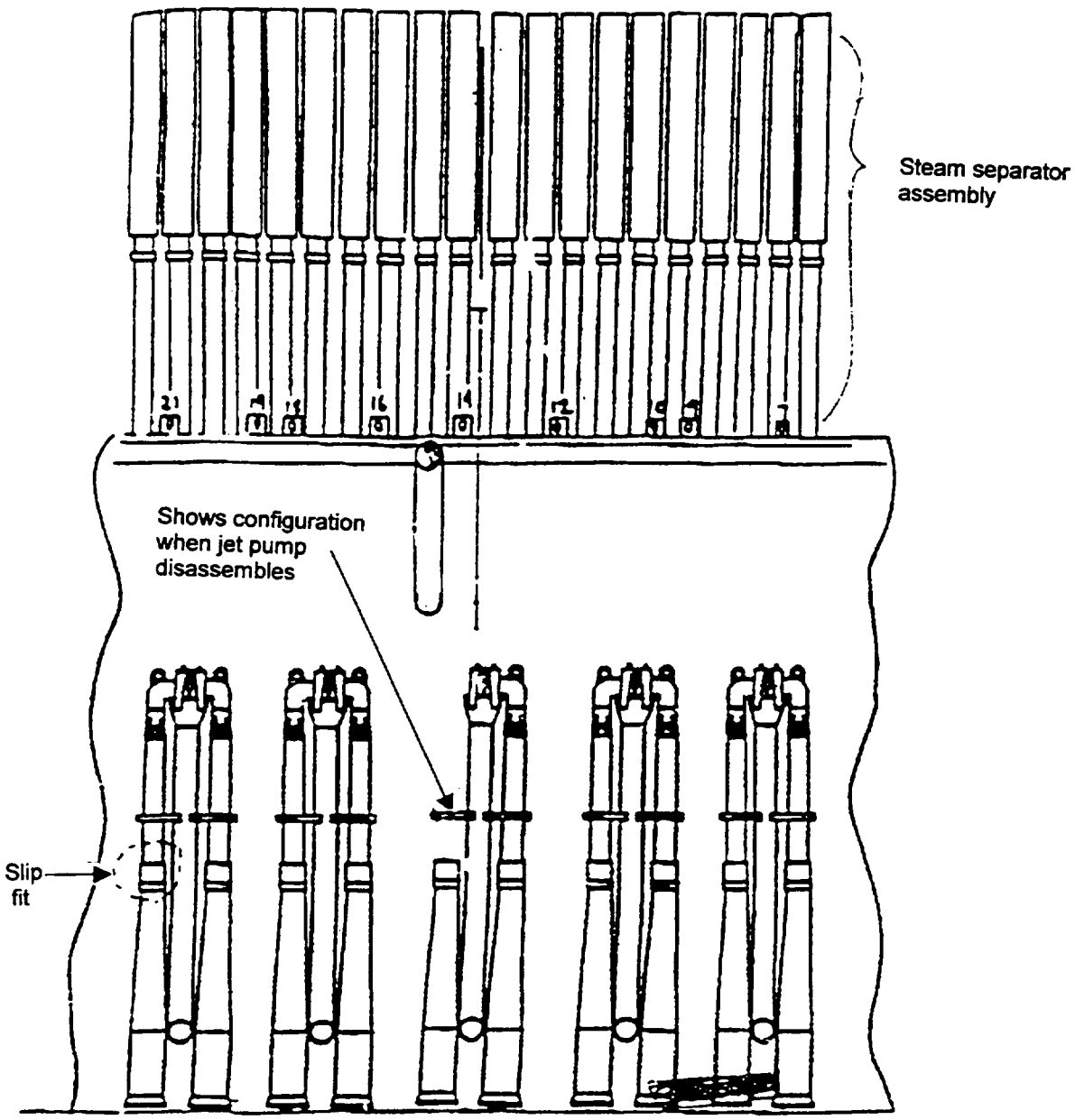

Figure 4-3. Probable jet pump disassembly from hold-down beam failure.

4.4 Access Hole Cover In Core Shroud (Baffle) Support Plate

4.4.1 Purpose

The core shroud (baffle) support plate transfers the weight of many of the reactor internals to the reactor vessel wall. It also allows for the lateral support loads to the fuel assemblies. The jet pump diffusers penetrate the plate so that the cooling water emanating from the jet pumps can be delivered to the lower plenum. Holes in the core shroud plate provided access to the lower plenum during construction.

4.4.2 Description

There are one or two (180 degrees apart) holes in the core shroud plate which is located at the bottom of the annulus region between the reactor vessel and the core shroud (Figure 2-17). The holes were closed after construction by welding a cover plate over each hole. The cover plates were placed on small ledges machined into the bottom of the shroud plate and then welded before plant startup. Cover plate thicknesses and crevice designs differ from plant to plant (there are at least seven different designs). The shroud and cover plates are made of Alloy 600 material, and the welds are also Alloy 600 (Alloy 82 or 182), except for BWR/6s, for which Type 316L material was used for cover plates.

4.4.3 Degradation

Degradation of the access hole cover plate welds was first detected at the Peach Bottom Unit 3 in 1988. Ultrasonic inspections showed indications of intermittent, partial through-wall cracks (USNRC, 1988). Damage of 50 to 60% circumferential cracking with cusps as deep as 70% through-the-wall was estimated. High residual stresses from welding, the crevice geometry of the weld, and less that ideal water quality may have contributed to the IGSCC. The cracks appeared to have initiated as a result of vertical crevices in the welds, and propagated along the weld fusion lines. General Electric issued SIL 462 (there are three additional supplements) concerning this cracking (GE, 1988). Supplement 2, Revision 1 in 1990 supplied guidelines for detecting core bypass flow caused by flow through access hole openings. The NRC issued Information Notice 88-03 (USNRC, 1988) to alert licensees of this degradation location. Nine plants have access hole covers of the Peach Bottom design (Peach Bottom 2 and 3, Browns Ferry 1, 2 and 3, Dresden 2 and 3, and Quad Cities 1 and 2).

While the previous cracking had been circumferential, radial cracking in a BWR/4 (Quad Cities 2) access hole cover was detected in 1992. Some of the radial cracking had penetrated into the Alloy 182 reactor vessel attachment weld of the core shroud support plate. GE's previously developed UT methods could detect circumferential, but not radial, cracks. SIL 462, Supplement 3, was issued by GE to notify licensees to this development. The NRC issued Information Notice 92-57 (USNRC, 1992) to alert licensees of this new orientation of access cover weld cracks.

4.4.4 Safety Significance of Cracking

The loss of an access hole cover plate could result in a loose part. The most likely scenario is for the dislodged plate to fall to one side, but there is a possibility that it could be swept into the jet pump suction and damage the pump.

A dislodged plate could allow some of the recirculation flow to bypass the core. During normal operation this would be readily detected and the plant could be shutdown. In the event of a recirculation line LOCA, the hole left by a dislodged cover plate could prevent reflooding of the core to the two-thirds level. However, the core spray system should still provide adequate core cooling.

While not of an immediate safety concern based on crack growth rates, a radial crack could damage the core shroud support and potentially propagate into the reactor vessel wall. The residual stresses due to the Alloy 182 attachment weld diminish rapidly beyond a distance of 25 mm (1 inch) into the vessel wall, and the vessel post-weld heat treatment should have further reduced the residual stress (Stramback, 1992).

4.4.5 Aging Management

GE SIL 462 recommended that the licensees inspect these welds if they had not previously done so, and that licensees which had previously performed inspections review the inspection records. GE developed and recommended methods to monitor core bypass flow, an indicator of an anomaly such as flow through the access hole. Both repair and replacement programs have been developed for access hole cover plate weld cracking. The rate of crack growth is dependent on plant operating and water chemistry history. Aging management can include crack growth and fracture mechanics analyses that assist in justifying continued operation on a temporary basis until repairs/replacement methods can be developed and completed.

4.5 Core Spray Piping and Sparger

4.5.1 Purpose

The core spray system supplies emergency cooling water to the reactor during loss-of-cooling accidents (LOCAs) so that the maximum fuel cladding temperature is not exceeded. At some BWRs, these lines are also used for the SLC system to inject sodium pentaborate into the core.

4.5.2 Description

The core spray line connects the external core spray piping to the core spray spargers inside of the core shroud. It typically consists of a 127-mm (5-in.) Schedule 40 Type 304 stainless steel pipe. The water in the pipe is stagnant during normal plant operations. Two core spray lines enter the reactor vessel through two core spray nozzles, located 180 degrees apart on the vessel wall. Upon entry into the reactor vessel, the line connects to a junction box or tee, which divides the flow into two lines that are routed to opposite sides of the vessel. Along the way, the lines are supported by clamps attached to the vessel wall. The pipes then bend downward and then bend again so that the lines pass through the core shroud. Inside the core shroud, the lines connect to the center of the semicircular core spray spargers (Figure 2-32 and 2-33).

There are two spargers at different elevations and two tee box pipe sections that serve as the inlet for each header. Each circular header is composed of two semicircular segments typically made of 88-mm (3 1/2 in.) Schedule 40 Type 304 stainless steel piping. The upper sparger has bottom-mounted nozzles, and the lower header has top-mounted nozzles (Figure 2-33). The nozzles are typically about 127 mm (5 in.) apart.

The core spray system in some BWRs contains Type 316 stainless steel.

4.5.3 Degradation

Many of the welds in the core spray line piping are not stress relieved. Core spray sparger cracking has been detected in six BWRs. Cold working and sensitization during the fabrication process and stresses incurred during installation were considered to be major contributors to the cracking.

Cracking of core spray piping was first observed at Oyster Creek in 1980. Three indications were reported. [Three additional indications were identified in 1992 (one through-wall and two linear)]. Since the first crack, through-wall cracking of core spray piping has been discovered by visual inspections at several BWRs. Most of the cracking has been in the junction box area or at the lower elbow region where the piping penetrates the core shroud. These failures have occurred in the weld heat-affected zones (HAZ) and cold-worked areas. No cracks have been detected at crevice locations. However, the creviced locations have extremely limited accessibility for inspection, and inspections of heat-affected zones on the piping inside diameter is not possible. The cracking incidents have occurred in BWRs with relatively high lifetime average coolant conductivity.

There have been several cracking incidents in core spray spargers. Typically the cracking has occurred at the tee-box to sparger welds. There have been some cases where circumferential cracks were observed around the sparger piping away from the tee-box. These IGSCC cracks were attributed to cold work imparted by cold bending operations. Some of the cracks were in weld HAZs.[3]

Cracking in the Oyster Creek spargers was first detected in 1978 as one through-wall crack. Twenty-eight additional cracks were reported in the core spray sparger in 1980. The NRC issued IE Bulletin 80-13 (USNRC, 1980b) in 1980 to inform licensees of sparger cracking, to require inspection of all spargers, and to require reports of any cracking to the NRC. The IE Bulletin reported a crack on an Oyster Creek sparger that extended at least 180 degrees circumferentially around the sparger. The crack was through-wall and apparently initiated at the pipe outer diameter (OD), close to one of the spray nozzles and adjacent to one of the support brackets (Figure 4-4). A total of 28 cracks 0.025 to 0.05 mm (0.001 to 0.002 in.) in width of varying lengths were identified in both spargers. Five additional cracks were identified in 1982. The IE Bulletin also reported five cracks in the upper sparger and two in the lower sparger of the Pilgrim plant using VT inspection methods. GE SIL 289 (GE, 1989), Revision 1, Supplement 1, Revision 1 issued in 1989, provide recommendations for managing core spray cracking.

As a result of the IE Bulletin 80-13 inspections, cracks were discovered at other BWRs. For example, in 1980, a semicircular linear indication was observed on the end cap of the sparger tee-box in the Vermont Yankee plant. The crack was apparently in the sensitized heat-affected zone of a weld used to install a 25 mm (1-in.) solid plug in a visual access hole drilled in the center of the end cap. In 1982, a crack indication was identified in the Millstone 1 sparger-to-tee-box weld. In 1984 a crack was detected in the HAZ of the lower sparger tee-box weld at Hatch Unit 1, approximately 3 mm (1/8 in.) from the weld. The crack spanned 180 degrees of the circumference and was 0.25 mm (0,010 inch) wide.

Other core spray system locations which have cold-working, weld sensitization, crevices, and/or high coolant conductivity can be susceptible to IGSCC.

4.5.4 Safety Significance of Cracking

A degraded core spray system could still deliver sufficient cooling water to maintain acceptable fuel temperatures. However, if the extent of degradation became too severe, core cooling during a LOCA might be insufficient.

4.5.5 Aging Management

About 1980, a temporary local repair consisting of a clamp assembly over the crack was developed. Since that time, a combination of local repair and partial piping replacement have been developed for the affected parts of the core spray system. Another option is to justify limited continued operation with cracked piping by means of fracture mechanics analyses. Or a licensee might opt to justify extended

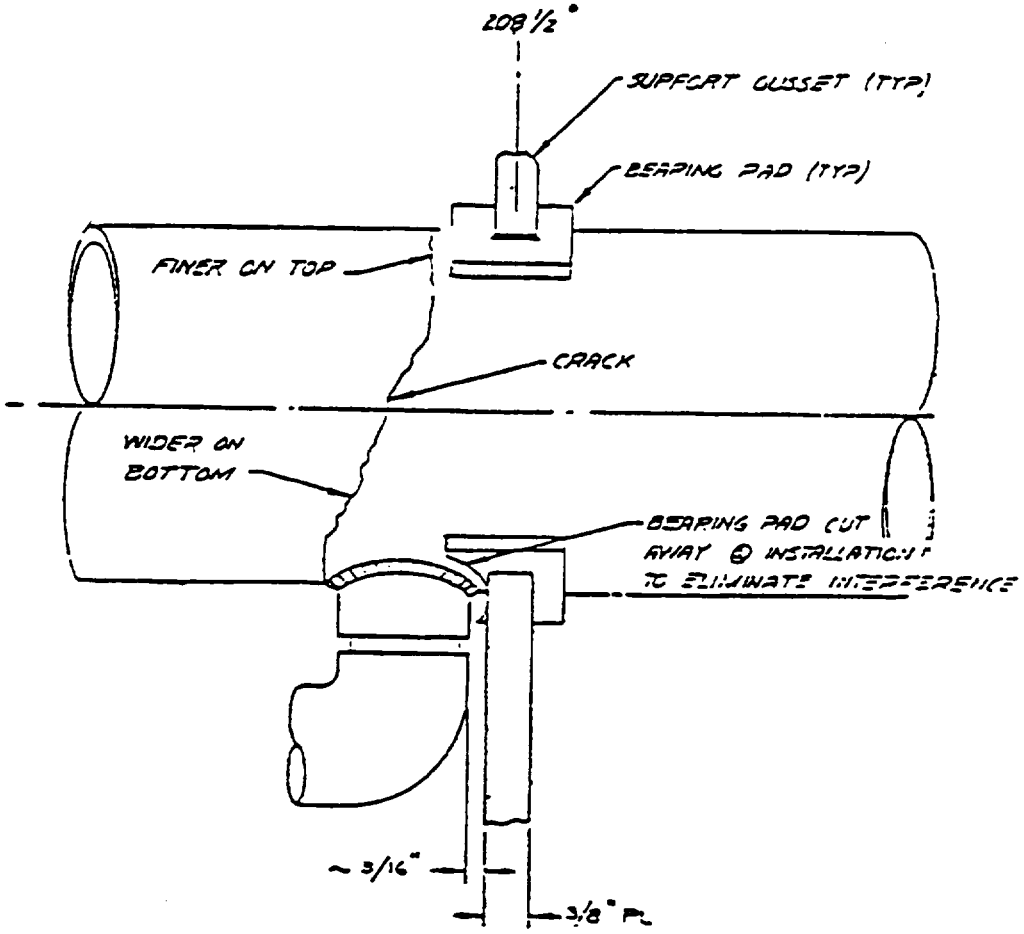

Figure 4-4. Location of core spray sparger cracking at Oyster Creek in 1980.

continued operation through a combination of frequent inspections and fracture mechanics analysis of detected flaws.

The spargers are inspected per NRC IE Bulletin 80-13.

4.6 IRM/SRM Housings and Dry Tubes

4.6.1 Purpose

The in-core neutron flux monitor housings and dry tubes provide routing and support for the insertion of neutron flux monitors [source range monitors (SRMs), intermediate range monitors (IRMs), local power range monitors (LPRMs), and calibration monitors] into the reactor core. The measurement of neutron flux is used to control reactor operation, to detect abnormal operation, and in some cases to provide a scram signal.

4.6.2 Description

The housing is a pipe segment about 25 mm (1 in.) in diameter with a seal-ring flange at the bottom, which is outside the reactor vessel. The segment is inserted through a penetration in the reactor

vessel bottom head, and welded to the inside surface of the head. A guide tube is welded to the top of each housing, forming a continuous cylinder open at the upper end to provide for cooling water. The guide tubes extend upward to just above the core plate, and are supported laterally by a latticework of clamps, tie bars, and spacers. The portion of the housings beneath the reactor vessel are part of the reactor primary coolant system boundary. On older product lines both the housing and guide tubes are made of Type 304 stainless steel, but on the BWR/6 design, the housing is made of Alloy 600. The welds between the housings and the guide tubes, as well as the housings and the reactor pressure vessel, are Type 308 or 308L stainless steel on older models, and Alloy 82 or 182 on BWR/6s. However, Oyster Creek has a Type 304 stainless steel housing and an Alloy 600 vessel weld (Stoller, III.8, 1995).

The dry tube is a thin-walled tube inside the housing and guide tube. The lower end is welded to a thick-walled tube that contains a cavity which houses the nuclear instruments (Figure 4-5). A guide plug is welded to the top of the dry tube. An adapter unit is inserted into the dry tube through the guide plug and is pressed against a spring located inside the dry tube. The top of the adapter is inserted into slots in the top guide. Part of the dry tubes act as a reactor primary coolant system pressure boundary.

4.6.3 Degradation

Leakage through the housing-to-vessel weld was detected at the Oyster Creek BWR in 1974. No defects were found in the housing itself by eddy current testing (ET) or UT. A weld defect or IGSCC may have been contributors to the degradation. IGSCC of furnace-sensitized weld material had earlier (1967) been detected on Oyster Creek control rod drive mechanism (CRDM) penetrations in the same general area. Housing cracking was reported at the Quad Cities 1 BWR in 1992.

Cracking has been detected in the dry tubes of several BWRs, in the thin tube segment surrounding the compression spring at the top of the tube. All of the observed cracks have been in the upper portion of the dry tube, adjacent to the weld between the tube and the guide plug or the weld between the tube and the primary pressure boundary. The cracks are in the perforated tube, which does not serve as a pressure boundary. Some of the dry tubes were found to be distorted.

Cracks in the spring housing (part of the dry tube top guide latching assemblies) were first discovered through visual inspection in 1984 and are generally attributed to crevice-accelerated IGSCC and IASCC. The cracking typically initiated in the crevice between the spring housing and guide plug, as shown in Figure 4-5. Thick oxide formation in the crevices appears to be the source of the stress. As the oxide grows, it forces the crevices open, a phenomenon termed oxide wedging. Sensitization does not occur in the heat-affected zone because the tube is thin and cooled quickly and evenly after welding. There appears to be a strong correlation between average coolant conductivity and IGSCC. Research has shown that there is a threshold of about 0.25 μS/cm for initiation of IGSCC (Brown and Gordon, 1987). The IGSCC growth appears to progress at a linear rate above this threshold. GE issued SIL 409, Revision 1 (GE, 1986a), for information and recommended inspections of dry tubes.

4.6.4 Safety Significance of Cracking

Failure of the in-core, non-pressure-boundary portion of the housing may disable the detector, but this would be promptly discovered by a loss of the monitor indication. There are several of each monitor type. Failure of the pressure boundary portion is outside the pressure vessel and therefore not a reactor internals component. Similarly, failure of a housing-to-reactor-vessel weld is considered part of the reactor vessel and therefore not a reactor internals component. Failure at either of these pressure boundary locations would result in a leak in the bottom head area.

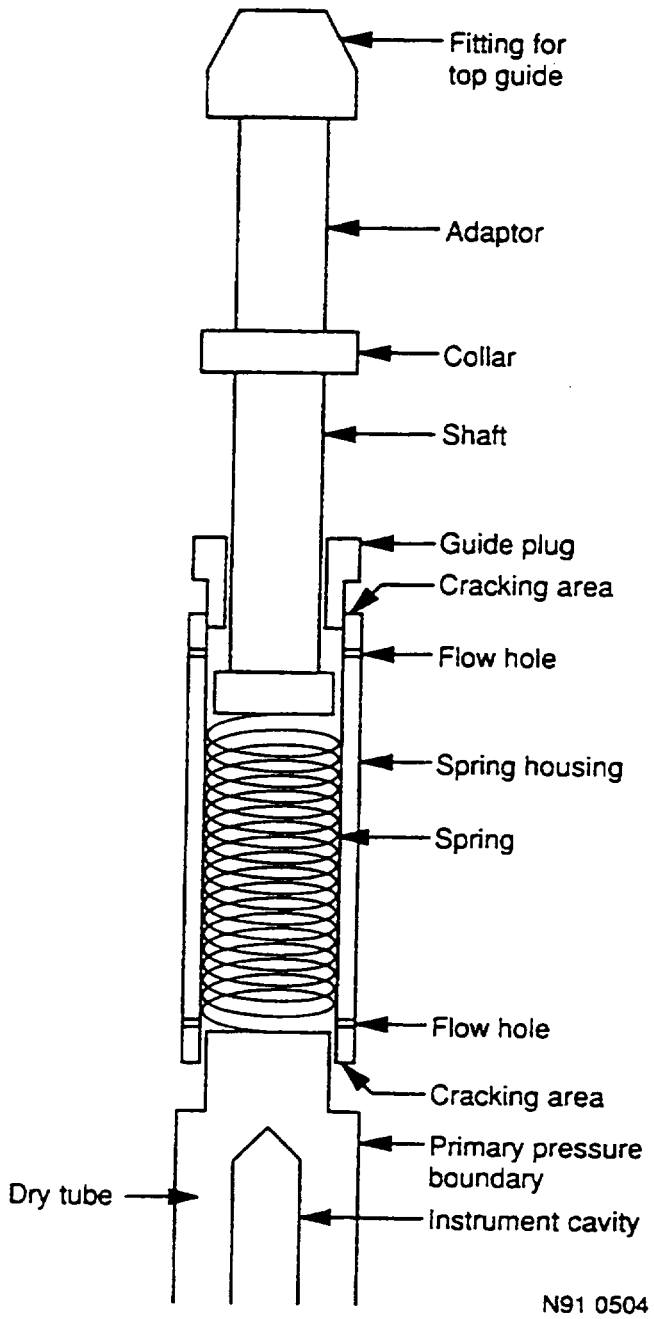

Figure 4-5. Location of dry tube cracking.

Failure of the non-pressure-boundary portion of a dry tube would have no safety significance because there are several of each type of monitor, and loss of one could be detected because of the loss of indication. Failure of the pressure-boundary portion would result in a primary coolant leak from the bottom head.

Failure of an in-core portion of a housing, guide tube, or dry tube could result in a loose part.

4.6.5 Aging Management

VT, ET, and UT methods are available for inspection. However, only a few plants have conducted visual inspection and the housings in most plants have not been inspected. The dry tubes have been visually inspected in most plants. Since IGSCC can be enhanced by increased coolant conductivity, water chemistry control can assist in mitigating IGSCC.

Replacement methods have been developed for both housings and dry tubes, and a repair technique has been developed for dry tubes. Although some utilities have replaced only cracked dry tubes and allowed the unaffected tubes to remain in service, GE recommends replacement of the entire assembly. Some utilities are replacing degraded dry tubes with a crevice-free design made of a more IASCC-resistant material.

4.7 Core Shroud Head Bolts

4.7.1 Purpose

The core shroud head bolts fasten the core shroud head to the core shroud top flange (BWR/2 to BWR/5 designs) and to the top guide grid in BWR/6 designs. The head maintains a flow barrier to separate the upward coolant flow through the core from the downward coolant flow in the annulus. It serves as a mixing chamber for the steam-water mixture exiting the core, directs it into the standpipes and steam separators, and supports the standpipes and steam separators.

4.7.2 Description

There are typically 36 to 48 bolts spread evenly around the head, with typical dimensions of 44 mm (1.75 in.) in diameter and 4.3 m (14 ft. long). However, the size and length varies, with BWR/6s having a shorter bolt, called studs, because they thread directly into the top guide grid. Bolts in BWR/2 though BWR/5 designs are held in place in three places, including lugs at the bottom. The two upper supports for BWR/6 bolts are the same as for previous designs, but at the bottom support, they thread into the top guide grid. The number of bolts was reduced for the BWR/5 design from prior specifications, which results in higher-prestressed bolts. Many of the earlier pre-BWR/6 designs do not have seismic pins to transfer shear loads from the head to the shroud, so the bolts and guide rods must carry lateral loads. There are two guide rods, 180 degrees apart, that guide the head into place during installation.

The design of the bolts, including their long length, is to provide easy access during reactor refueling operations with minimum underwater tool manipulations. A tee head is welded to one end of the Alloy 600 bolt (Figure 2-29). A sleeve covers most of the bolt, and the base of the sleeve is joined to a Type 304 stainless steel collar that is welded to the bolt shaft near the tee head. A part of the collar is cut out to provide space for the alignment pin window.

4.7.3 Degradation

Cracking was discovered at creviced locations in preloaded Alloy 600 core shroud head bolts at a number of BWRs in 1986. The inspection was in response to a GE urgent communications notice (SIL 433) concerning shroud head bolt breakage at Peach Bottom (GE, 1986b). Crack-like indications were found in 15 of the 36 bolts tested at Brunswick 2. Cracking occurred at the creviced region in the vicinity of a weld holding the Type 304 stainless steel collar to the Alloy 600 bolt (Figure 2-29). Increased plant water conductivity enhanced the propensity for IGSCC (Brown and Gordon, 1987).

GE issued SIL 433 to inform licensees of cracking, transmit the results of inspections, and discuss the consequences of bolt failures. Revision 1 to SIL 433 was issued in 1993. In 1994, IGSCC cracking was detected in 16 out of 48 shroud head bolts in the Fermi 2 plant.

IGSCC has also been detected at crevice locations in preloaded A286 guide bar bolts in ABB Atom-designed BWRs in Europe.

4.7.4 Safety Significance of Cracking

If all the core shroud head bolts were to fail during normal operation, the head could be lifted off vertically upward by differential pressure, or laterally by seismic loads. There are guide rods to sustain lateral loads. The major consequence would be potential damage to the core spray system if the head were free to move and impact or damage the core spray piping.

A loose part could be generated from a bolt failure. However, since the bolts have three supports, failures at two bolt locations would have to occur for a loose part to be generated.

4.7.5 Aging Management

The bolts are relatively easy to inspect because of their location at the top of the core. VT and UT methods have been developed for inspection. Since IGSCC can be enhanced by increased coolant conductivity, water chemistry control can assist in mitigating IGSCC. The bolts are accessible, and replacement methods have been developed. An alternate locking method has been developed to repair BWR/6 studs.

4.8 Steam Dryer and Support Ring

4.8.1 Purpose

The steam dryer removes excess water in the wet steam exiting the steam separators to provide steam with a very low moisture content to the turbines. The steam dryer is required during startup and shutdown, but is not needed for steady-state operation in BWR/6s, and possibly other designs. The steam dryer support ring transfers the loads from the steam dryer to the reactor vessel wall.

4.8.2 Description

The steam dryers are fabricated into a one-piece assembly of Type 304 stainless steel, and are completely removed from the vessel during refueling, which makes them relatively easy to inspect. The steam dryer support ring is a cold-formed Type 304 stainless steel section in many BWRs. A shallow cold-worked layer approximately 6 mm (0.25 in) is present at these BWRs. In other BWRs, the ring was installed in a non-cold-worked condition. The ring typically has a 152 × 76 mm (6 × 3 in.) cross section. The ring supports the dryer on four to six dryer support brackets, which are welded to the vessel wall. The dryer is held down during operation by the vessel head holddown brackets.

4.8.3 Degradation

At least nine domestic and two overseas BWRs have reported dryer cracking, which sometimes occurs in weld regions, but most often at non-weld regions. Ring cracking has been reported in several BWRs (Luk, 1993). The cracks originate in the cold-worked surface layer, and have been reported to be long, but very shallow. Since the stresses in the annealed material below the cold-worked layer are low, crack growth below the surface layer is expected to be very slow.

In 1985, a significant crack was found in one of the four Susquehanna 1 steam dryer support brackets , as well as cracking in the dryer itself (Novak, 1985).

4.8.4 Safety Significance of Cracking

It the dryer support ring failed, upward fluid forces could push the dryer assembly vertically upward toward the reactor vessel top head. This could potentially damage the head spray system [part of the reactor core isolation cooling (RCIC) system in some plants]. If ring failure causes the dryer to drop, it would impact the steam separators and standpipes. The load would be transmitted to the core shroud head, and then to the core shroud. Since the ring is supported by brackets, IGSCC in the ring could not propagate directly into the vessel wall. However, cracks in the brackets themselves could propagate into the vessel wall.

4.8.5 Aging Management

The ring is located such that it can be visually and UT inspected when the steam dryer assembly is removed from the reactor vessel during refueling. Local repairs can be made if cracking of the cold-worked surface layer is detected. Because of its height above the water region of the core, HWC is not effective in mitigating IGSCC of the ring.

4.9 Control Rods

4.9.1 Purpose

The control rods perform dual functions of power distribution shaping and reactivity control. The rods, which are inserted through the bottom of the reactor vessel, are moved in banks, or patterns. During normal operation, these patterns are arranged to counterbalance steam voids in the top of the core to flatten the power shape. The rods are partially withdrawn to achieve power operation, and are fully inserted for shutdown.

4.9.2 Description

The Type 304 stainless steel blades consist of two end castings, the top incorporating a handle and the bottom a velocity-limiting section, a vertical cruciform center post, and four U-shaped sheaths (Figure 2-9). The end castings and center post are welded into a single skeletal structure. The U-shaped sheaths are spot welded to the center post and end castings. The stainless steel sheaths extend the full length of the control element and provide a continuous blade surface.

The cruciform-shaped blades contain vertical neutron absorber rods (84 in BWR/6s). The rods are small stainless steel tubes filled with B_{10} in the form of a vibratory-compacted boron carbide (B_4C) powder. The tubes are seal welded with end plugs on either end. Later designs included both boron carbide and hafnium.

4.9.3 Degradation

Cracking of portions of control rod blades was first detected in 1979. Cracking has occurred at the sheath spot weld connections, which form a crevice between the sheath handle and tie rod. Cracking in the uncreviced portion of a handle in three plants has also been detected. Control blade cracking can be enhanced by IASCC, high average water conductivity, and the presence of crevices. Swelling of B_4C is also a contributor. Once a crack opens, boron is leached out of the rod.

The cracking and boron depletion detected in hot-cell examinations of blades from both overseas and domestic BWRs has been localized. GE issued SIL 157 with two revisions (GE, 1981) to alert licensees of the IGSCC cracking in control blades. The NRC issued IE Bulletin 79-26 with one revision (USNRC, 1980c) that required licensees to review the operating history of each BWR to establish a record of boron depletion over the upper one-fourth of each rod, identify any control blades predicted to have greater than 34% B_{10} depletion over the upper one-fourth of the rod by the next refueling outage, conduct shutdown margin tests at the next refueling outage, and perform a destructive examination of the most highly exposed control blade at the end of the next fuel cycle.

During a repair outage of a German BWR in 1977, 45 tubes were examined in a hot cell (Stoller, IV.A.10, 1995). The selected control rods had slightly exceeded the then current design life. Significant cracking and loss of boron carbide and bonding were observed.

4.9.4 Safety Significance of Cracking

Failure of a control rod blade can lead to the loss of boron poison material. This will impact the shutdown capability of the BWR and could increase the consequences of control rod drop accidents. GE evaluated the impact of boron depletion on shutdown capability, Critical Power Ratio (CPR) reduction, and the consequences of control rod drop accidents. Together with the results of hot cell examinations, GE concluded that (a) boron loss before the end of blade design life will not affect control rod drop accident consequences, (b) if no more than 26% of the blades have experience a 10% reduction in projected worth, there is a negligible effect on the CPR, and (c) if blades are predicted to have more than 10% reduction in projected worth, shutdown margin should be demonstrated.

As with all other components, cracking could lead to a loose part.

4.9.5 Aging Management

The loss of boron material shortens the life of the control rod blade. The GE criteria for the end of design life is when the reactivity worth of the blade is reduced by 10%. NRC IE Bulletin 79-26, Revision 1 (USNRC, 1980c) required licensees to identify any control blades predicted to have greater than 34% B_{10} depletion averaged over the upper one-fourth of the blade and justify continued operation for any blade with greater than 42% boron depletion averaged over the upper one-fourth of the blade, or if greater than 26% of the blades have greater than 34% depletion averaged over the upper one-fourth of the blade.

The blades are relatively easy to inspect and replace. Therefore, cracking of control blades is managed by a combination of inspection, hot cell examination of exposed blades, reactivity calculations, and blade replacement. The NRC states that the preferred management method is to replace blades expected to have greater than 34% B_{10} depletion averaged over the upper one-fourth of the blade. Blades in higher flux regions are routinely replaced every 4 to 7 years, whereas peripheral blades are routinely replaced less frequently. It is highly probable that by this time (1999), all blades that were initially susceptible are no longer installed.

4.10 Neutron Source Holder

4.10.1 Purpose

Several startup sources are located in the core to provide additional neutrons during initial startup of the reactor.

4.10.2 Description

The antimony gamma source and the beryllium sleeve source material are enclosed in a stainless steel holder. For example, in Millstone 1 there were five source assemblies, consisting of an 18-mm (0.7-in) diameter 0.5 mm (0.020-in.) thick stainless steel tube with an inner beryllium sleeve, sheathed in stainless steel, with the center portion filled with two antimony 8-mm (0.322 in.) diameter pins. Peach Bottom 2 had four sources. BWR/6 designs have 15 source locations machined into the core plates. The sources are positioned vertically between the top guide and the core plate. Holes (core plate) or slots (top guide) are machined into these components to accommodate the ends of the source holders. A spring is located in the top of the holder to provide a compressive load to hold the source in place. Undamaged sources can easily be removed.

4.10.3 Degradation

An inspection of neutron sources was performed at the Big Rock Point BWR/1 in 1974. The attempt to remove the assemblies was initially unsuccessful because the beryllium cylinders had expanded and oxidized. The failure was attributed to excessive internal pressure from helium and tritium gas formation which, assisted by IGSCC, caused a breach in a weld. This allowed water to enter the tube, which resulted in oxidation, and caused further expansion of the tube. Many loose pieces of beryllium oxide were observed in the reactor vessel, and small pieces were noted lodged among fuel channels, control rod blades, and in-core monitors. The source was replaced.

While performing a neutron source assembly inspection in 1976, a Millstone 1 neutron source assembly was found to be broken. Many pieces were found in the core area, on the core plate, and one piece was located in a control rod guide tube. The source was replaced.

In 1977, during the removal of the Peach Bottom 2 source holders, the upper section was removed but the lower section remained in the reactor. A remote camera visual inspection revealed significant cracking of the stainless steel sleeve of the remaining portion, as well as of the other three sources. Subsequently, GE issued SIL 215, Revision 1 (GE, 1978), advising licensees to remove the sources since they were no longer needed for operation. The IGSCC contribution to source failures is probably unknown in some cases.

4.10.4 Safety Significance of Cracking

Since the sources are needed only for initial startup, cracking or loss does not affect their original purpose. Therefore, the only safety significance is from loose parts.

4.10.5 Aging Management

GE SIL 215, Revision 1, recommended that sources and holders be removed after the first fuel cycle. In many BWRs, the sources have been removed.

4.11 Core Shroud Support

4.11.1 Purpose

The core shroud support supports the weight of a number of components, including the jet pumps, core shroud, core plate, top guide, shroud head, and steam separators (about 200,000 lbs. total). During normal operation, it also reacts an upward loads of about 1,000,000 lbs. resulting from the differential pressure between the lower plenum and the top of the shroud head. The core shroud support isolates the

annulus from the lower plenum, and forms part of the boundary to maintain the two-thirds height water level in the core in BWR/3 to BWR/6 plants during a recirculation line LOCA.

4.11.2 Description

Core shroud supports are typically made of Alloy 600 and the weld material is usually either Alloy 82 or 182. There are four types of designs. The design for both of the BWR/2 plants consists of a conical skirt welded to both the reactor vessel wall and the core shroud support ring. A majority of the BWR/3 through 6 units, have a flat plate and column or pedestal support design. For this design, the core shroud support consists of a flat plate (baffle plate) welded to the reactor vessel wall and the core shroud support cylinder. The top of the vertical core shroud support cylinder is welded to the bottom of the core shroud. Vertically oriented plates or columns are then welded to the bottom of the core shroud support cylinder and to the bottom head of the reactor vessel (Figure 2-11).

A third core shroud support design consists of the flat plate welded across the annulus between the reactor vessel wall and the core shroud support cylinder. The top of the vertical core shroud support cylinder is welded to the bottom of the core shroud while the bottom of the core shroud support cylinder is welded to the flat plate. However, instead of vertical columns extending to the bottom head, gusset plates have been welded between the flat plate and the reactor vessel wall. A fourth at only one BWR/4 unit consists of a very thick (9 inch) flat plate, made of SCC resistant low alloy steel, and is welded across the annulus between the reactor vessel wall and the core shroud support cylinder. The top of the vertical core shroud support cylinder is welded to the bottom of the core shroud while the bottom of the core shroud support cylinder is welded to the top of the flat plate.

4.11.3 Degradation

The core shroud support region is in the lower portion of the reactor vessel; consequently, this location has received limited inspections. Crack indications were found using a UT examination in the shroud-to-cone-skirt weld in a BWR/2 plant. The cracking originated in the Alloy 182 weld metal and at least one of the cracks grew into the Alloy 600 heat-affect zone.

In 1996, a 46 cm (18-in.) indication was found at the shroud horizontal plate to shroud cylinder plate weld on Susquehanna 1 (weld H-8 on Figure 3-1).

Cracking was detected in the support of a Japanese plant in 1999 (ANRE/MITI, 1999). The design is similar to the BWR/2 conical skirt. Many longitudinal fine cracks were located on the support-to-vessel weld. Cracks were also found on welding groove face at nine locations. Cracks were also on the lower support.

4.11.4 Safety Significance of Cracking

Loss of the core shroud support could result in lateral movement of the core shroud, which might inhibit or prevent control rod motion. Displacement of the core shroud might also inhibit or prevent SLC system functionality.

4.11.5 Aging Management

Based on experience to date, it is expected that instances of IGSCC will occur in core shroud supports. Although inspections are limited, significant cracking has not been detected, and no near-term actions are recommended. However, the extent of cracking in the Japanese BWR in 1999 demonstrates that cracks can initiate which may grow to significant sizes over a plant's lifetime. The BWRVIP is

developing a long-range plan for areas of inspection and repair. HWC is expected to be beneficial in the core shroud support area.

4.12 Jet Pump Inlet Riser Elbow

4.12.1 Purpose

The elbow is in the line which routes the flow from the recirculating water inlet line nozzle thermal sleeve to the jet pump inlet mixer. The inlet riser lowers the nozzle below the active fuel region to reduce fast neutron flux exposure to the nozzle welds.

4.12.2 Description

The elbow is Type 304 10-in. (25.4 cm) piping.

4.12.3 Degradation

In 1996, cracking was discovered in the riser assembly elbow-to-thermal sleeve weld on a 25-year old foreign plant using a VT-1 underwater camera. The circumferential cracks were approximately 83 and 112 mm (3.27 and 4.41 in) in length. No depth measurements were taken. As a result of a GE SIL issued because of this cracking, three indications were found in 2 of the 10 jet pump riser assembly elbows in LaSalle Unit 2 using VT-1 enhanced visual examination (USNRC, 1997a). The crack lengths were approximately 20 to 150 mm(0.75 to 6 in.). No depth measurements were taken. The smallest indication was axial, while to other two were circumferential. Cracking has also been found at least three other domestic BWRs.

4.12.4 Safety Significance of Cracking

If the inlet riser elbow weld fails, fluid forces could cause the riser braces to fail resulting in consequences similar to those described in Section 4.3.4 for the jet pump holddown beam.

4.12.5 Aging Management

If cracking is observed, analyses are conducted to ensure that the observed condition will not lead to failure before the next inspection. Inspections are conducted after subsequent operation. The jet pump can be replaced if required.

5. PLANT DESIGN BASES AND SHUTDOWN SYSTEMS

There are many defined design bases for commercial nuclear power plants. However, considering the effects of IGSCC on reactor vessel internals, unique safety concerns exist with design basis events that significantly load reactor internals and require the functionality of reactor internals to maintain plant safety. This section summarizes how typical BWR plants are designed to respond to and mitigate the effects of these significant design basis events, hereafter called initiating events. This report section assumes no reactor vessel internal failures due to IGSCC. With this knowledge of anticipated design response, the actual significance of these initiating events, factoring in potential IGSCC-related reactor internals failure scenarios (which can be beyond-design bases), can be better understood.

This section provides the background regarding how domestic BWR plants are designed to respond to significant initiating events. However, considering IGSCC effects on reactor internals is beyond-design basis. Single internal failures, common mode failures, or multiple internal failures may occur in conjunction with a potential LOCA or SSE event. This significantly increases the challenge to plant safety. Therefore, the next report section addresses that specific issue.

5.1 Initiating Events and Loadings

There are a number of potential events and loadings which must be considered in nuclear power plant design. Many of these events can impose significant loads on reactor internals. These significant initiating events include:

Main steam line break (MSLB)

Feedwater line break (FWLB)

Recirculation line break (RLB)

Safe Shutdown Earthquake (SSE)

Anticipated transient without scram (ATWS).

Other primary coolant pipe breaks are believed to be enveloped by these significant initiating events. These significant initiating events challenge a plant's ability to properly control and cool the nuclear core. These initiating events can significantly load the reactor internals and require the functionality of certain reactor internals in order to maintain plant safety.

In addition to considering specific events, it is important to consider what loading combinations were considered in a plant's design. Many of the domestic operating BWRs were designed for the individual events listed above and the load combination of SSE + LOCA. For a BWR plant, a RLB would satisfy the definition of a LOCA as defined in the Standard Review Plan Section 3.9.3 (USNRC, 1981). MSLB and FWLB can also be considered a LOCA event for a BWR plant, depending on the break location. This load combination of SSE + LOCA was not required for many of the earlier BWRs (BWR/2, BWR/3, and possibly some of the earlier BWR/4 plants) but was required for most of the BWR/4s and all of the BWR/5 and BWR/6 plants. This load combination does not mandate that a SSE event will cause a LOCA, simply that the load combination was considered in the plant design. Ten domestic BWR plants were reviewed and addressed in Section 2.2 of this report (dual plants were counted as only one plant). Table 5-1 lists those same ten plants and specifies which plants evaluated their design to the worst case loadings resulting from any of the separate significant initiating events and those plants

Table 5-1. Licensing basis and design basis insights.

Plant	Licensing Commitment in Case of Pipe Break[a] or SSE	Load Used for Design Basis
Nine Mile Pt. 1	Hot Shutdown	Max of separate events[b]
Oyster Creek	Hot Shutdown	Max of separate events[b]
Millstone 1	Hot Shutdown	Max of separate events[b]
Dresden 2 & 3	Cold Shutdown	Max of separate events[b]
Duane Arnold	Hot Shutdown	Max of separate or combination[c]
Limerick 1 & 2	Cold Shutdown	Max of separate or combination[c]
LaSalle 1 & 2	Cold Shutdown	Max of separate or combination[c]
Nine Mile Pt. 2	Cold Shutdown	Max of separate or combination[c]
Clinton	Cold Shutdown	Max of separate or combination[c]
Grand Gulf	Cold Shutdown	Max of separate or combination[c]

a. The term pipe break as used herein includes MSLB, FWLB, RLB, and any other significant pipe break involving primary coolant water.

b. Only the worst case of LOCA (MSLB, FWLB, or RLB) or SSE loadings probably governs the design.

c. Per Standard Review Plan (NUREG-0800) Section 3.9.3 (USNRC, 1981) criteria, the maximum of either LOCA (MSLB, FWLB, or RLB) or LOCA + SSE loadings probably governs the design.

who evaluated their design to the worst case loadings resulting from any of the separate events or SSE + LOCA. As can be seen, the requirement of utilizing the load combination SSE + LOCA probably started with either the late BWR/3 plants or the earlier BWR/4 plants. Plants designed using the SSE + LOCA load combination should reflect a structurally stronger design. The information contained in Table 5-1 was obtained from plant licensing personnel. For the risk evaluations in this report, SSE and LOCAs were considered to be separate events from a probability standpoint.

Table 5-1 also lists, for these same ten plants, the licensing commitment required of each plant assuming a SSE or LOCA event occurred. As indicated in the table, the earlier plants have a hot shutdown commitment while the later plants have a cold shutdown commitment. A hot shutdown is defined as the reactor being subcritical, all operable control rods are fully inserted, and the reactor coolant temperature is greater than 100°C (212°F). Cold shutdown is defined as the reactor being subcritical, all operable control rods are fully inserted, and the reactor coolant temperature is equal to or less than 100°C (212°F). Apparently, sometime during the late BWR/3 and early BWR/4 plant licensing time frame, the NRC altered its acceptable licensing philosophy. Although there is a definite licensing commitment difference for LOCA or SSE events, the actual goal of any BWR plant operator would be to achieve cold shutdown as soon as reasonably achievable. This would be due to concerns regarding containment over-pressurization, containment venting, generic plant safety, etc. Therefore, this difference in licensing commitments between the older and newer plants is not believed to significantly impact how a cognizant BWR plant operator would actually respond to a potential SSE or LOCA event.

5.2 Systems Relied Upon to Mitigate a Significant Initiating Event

If a potential SSE or LOCA occurs, there are a number of options available to the plant operator. The main objective, especially in the case of a LOCA, is to gain control of the nuclear core heating and cool the core to a point where safe conditions are assured. This means having the capability of adding coolant into the reactor vessel for core cooling purposes. Depending on the pressures and temperatures within the reactor vessel, various system paths exist which can be used to provide coolant directly into the reactor vessel. In addition, other systems exist which can provide coolant through these other systems and then into the reactor vessel. Therefore, the focus of this discussion is on those systems which can provide coolant directly and indirectly to the reactor vessel. Proper operator response is assumed for the purposes of this discussion.

Tables 5-2 through 5-6, based upon a typical BWR/2 through BWR/6 respectively, list those systems which a BWR plant operator can rely upon to ensure plant safety. These tables assume that the MSLB and FWLB occur inside the drywell or containment, between the reactor and the isolation valves. For BWR/2 and BWR/3 plants, the feedwater systems are assumed to have motor driven pumps. This is because all the BWR/3 plants use motor driven feedwater pumps and of the two BWR/2 plants (with three reactor feedwater pumps each), only one plant (Nine Mile Point 1) has one steam driven pump in use. For the BWR/4 through BWR/6 plants, the feedwater systems are assumed to have steam driven pumps since there are more steam driven pumps utilized than motor driven pumps. The recirculation pumps are not required to inject coolant during accident conditions. Only the intact loop piping is necessary to route coolant into the reactor vessel. During the shutdown cooling mode, the recirculation discharge valve is assumed to be closed. Finally, for the sake of ease and clarity, Tables 5-2 through 5-6 also assume that a RLB means all individual recirculation loops are non-functional.

As can be seen, the effectiveness of certain systems (such as high pressure ECC) depend on whether they attach directly to the vessel or are attached to another system which may be subject to a pipe break. In most cases, a FWLB or RLB reduces operator options because a number of alternate emergency cooling systems rely on the feedwater or recirculation piping as their path for getting coolant to the core. Other mitigation systems become ineffective due to a loss of steam from the reactor vessel or main steam lines which is used to operate steam-driven pumps. However, all of the tables reveal that each potential initiating event still provides the plant operator with at least two remaining options of getting coolant into the reactor vessel. In the case of a RLB, reactor vessel drainage is the major concern, making many of the systems using annular flooding ineffective. This is why the ECC spray systems are crucial for mitigation of a RLB. The tables reveal that a RLB provides the most challenge to safety by limiting the number of mitigation options to the plant operator, especially in the older BWRs that do not have multiple ECC systems. One of the last resort mitigation efforts available to the plant operator is the use of the core reflood system. It includes the option of flooding the entire primary containment (drywell), even through a broken pipe if necessary, in order to ultimately flood the reactor vessel and cool the core.

Table 5-2. Typical BWR/2 systems to be relied upon to mitigate initiating events.

Initiating Event	Typical BWR/2 Design							
	High Pressure ECC (FWCI)[a]	Low Pressure ECC Spray (Core Spray)	Feedwater (FW)[b]	Recirculation (Shutdown Cooling)	IC	Shutdown Cooling System	SLC	Core Flood System
MSLB		X	X	X	X	X	-	X
FWLB		X		X	X	X	-	X
RLB		X	X				-	X
SSE		X		X	X	X	-	X
MSLB + SSE		X		X	X	X	-	X
FWLB + SSE		X		X	X	X	-	X
RLB + SSE		X					-	X
ATWS		X	X	X	X	X	X	X

Table Notes:

Other plant "systems" which can be relied upon to help mitigate a pipe break or ATWS event include Primary and Secondary Containment, Automatic Depressurization System, Containment Isolation System, Containment Atmosphere Control, Alternate Rod Insertion, and Standby Gas Treatment System but these are similar for all plants and not directly affected by IGSCC failures inside the reactor vessel.

Unless indicated below, the listed systems connect directly to the reactor vessel and provide a direct flow path for coolant. Those systems used during accident mitigation but not directly connecting to the reactor vessel include:

System	Connects to RV Via
Isolation Condenser (IC)	Recirculation (Suction)
Core Flood (Standby Coolant) System	Feedwater
Shutdown Cooling System	Recirculation (Discharge)

Head spray (if available) and RWCU systems do not have adequate flow capacities to mitigate these initiating events and are not considered herein.

SLC is used when a scram is not achieved. However, it is still listed with a dash (-) indicating it is not anticipated to be used but is available if necessary.

a. FWCI is not an engineered safety system for BWR/2 plants and therefore is not considered being functionally available during accident events.

b. Motor driven feedwater pumps are typical of BWR/2 plants. Therefore, the feedwater system is available as indicated above except during a FWLB or during an SSE or any initiating event plus SSE since the balance-of-plant portion of the feedwater system is not an engineered safety system.

Table 5-3. Typical BWR/3 systems to be relied upon to mitigate initiating events.

Initiating Event	Typical BWR/3 Design								
	High Pressure ECC (HPCI)[a]	Low Pressure ECC Spray (Core Spray)	Low Pressure ECC Flood (LPCI)	Feedwater (FW)[b]	Recirculation (Shutdown Cooling and LPCI)	RCIC[a]	RHR (Shutdown Cooling and LPCI)	SLC	Core Flood System
MSLB		X	X	X	X		X	—	X
FWLB		X	X		X		X	—	X
RLB		X		X				—	X
SSE	X	X	X		X	X	X	—	X
MSLB + SSE		X	X		X		X	—	X
FWLB + SSE		X	X		X		X	—	X
RLB + SSE		X						—	X
ATWS	X	X	X	X	X	X	X	X	X

Table Notes:

Other plant "systems" which can be relied upon to help mitigate a pipe break or ATWS event include Primary and Secondary Containment, Automatic Depressurization System, Containment Isolation System, Containment Atmosphere Control, Alternate Rod Insertion, and Standby Gas Treatment System but these are similar for all plants and not directly affected by IGSCC failures inside the reactor vessel.

Unless indicated below, the listed systems connect directly to the reactor vessel and provide a direct flow path for coolant. Those systems used during accident mitigation but not directly connecting to the reactor vessel include:

System	Connects to RV Via
Core Flood (Standby Coolant) System	RHR (Recirculation)
Shutdown Cooling System	Recirculation (Discharge)
High Pressure Coolant Injection (HPCI)	Feedwater
Reactor Core Isolation Cooling (RCIC)	Feedwater
Residual Heat Removal (RHR)	Recirculation (Discharge)
Low Pressure Coolant Injection (LPCI)	Recirculation (Discharge)

Head spray and RWCU systems do not have adequate flow capacities to mitigate these initiating events and are not considered herein.

SLC is used when a scram is not achieved. However, it is still listed with a dash (-) indicating it is not anticipated to be used but is available if necessary.

a. There is insufficient steam flow to properly operate the system pumps during LOCAs (RLB, MSLB, FWLB).

b. Motor driven feedwater pumps are typical of BWR/3 plants. Therefore, the feedwater system is available as indicated above except during a FWLB or during an SSE or any initiating event plus SSE since the balance-of-plant portion of the feedwater system is not an engineered safety system.

Table 5-4. Typical BWR/4 systems to be relied upon to mitigate initiating events.

	Typical BWR/4 Design								
Initiating Event	High Pressure ECC (HPCI)[a]	Low Pressure ECC Spray (Core Spray)	Low Pressure ECC Flood (LPCI)	Feedwater (FW)[b]	Recirculation (Shutdown Cooling and LPCI)	RCIC[a]	RHR (Shutdown Cooling and LPCI)	SLC	Core Flood System
MSLB		X	X		X		X	—	X
FWLB		X	X		X		X	—	X
RLB		X						—	X
SSE	X	X	X		X	X	X	—	X
MSLB + SSE		X	X		X		X	—	X
FWLB + SSE		X	X		X		X	—	X
RLB + SSE		X						—	X
ATWS	X	X	X	X	X	X	X	X	X

Table Notes:

Other plant "systems" which can be relied upon to help mitigate a pipe break or ATWS event include Primary and Secondary Containment, Automatic Depressurization System, Containment Isolation System, Containment Atmosphere Control, Alternate Rod Insertion, and Standby Gas Treatment System but these are similar for all plants and not directly affected by IGSCC failures inside the reactor vessel.

Unless indicated below, the listed systems connect directly to the reactor vessel and provide a direct flow path for coolant. Those systems used during accident mitigation but not directly connecting to the reactor vessel include:

System	Connects to RV Via
Core Flood (Standby Coolant) System	RHR (via Recirc path)
High Pressure Coolant Injection (HPCI)	Feedwater
Reactor Core Isolation Cooling (RCIC)	Feedwater
Shutdown Cooling System	Recirculation (Discharge)
Low Pressure Coolant Injection (LPCI)	Recirculation (Discharge)
Residual Heat Removal (RHR)	Recirculation (Discharge)

Head spray and RWCU systems do not have adequate flow capacities to mitigate these initiating events and are not considered herein.

SLC is used when a scram is not achieved. However, it is still listed with a dash (-) indicating it is not anticipated to be used but is available if necessary.

a. There is insufficient steam flow to properly operate the system pumps during LOCAs (RLB, MSLB, FLWB).

b. Steam driven feedwater pumps are typical of BWR/4 plants. Therefore, the feedwater system is not available as indicated above since there is insufficient steam flow to properly run the feedwater pumps during any initiating event (except during an ATWS) or any initiating event plus SSE or SSE since the balance-of-plant portion of the feedwater system is not an engineered safety system.

Table 5-5. Typical BWR/5 systems to be relied upon to mitigate initiating events.

	Typical BWR/5 Design								
Initiating Event	High Pressure ECC Spray (HPCS)	Low Pressure ECC Spray (LPCS)	Low Pressure ECC Flood (LPCI)	Feedwater (FW)[a]	Recirculation (Shutdown Cooling)	RCIC[b]	RHR (Shutdown Cooling)	SLC	Core Flood System
MSLB	X	X	X		X		X	—	X
FWLB	X	X	X		X		X	—	X
RLB	X	X	X					—	X
SSE	X	X	X		X	X	X	—	X
MSLB + SSE	X	X	X		X		X	—	X
FWLB + SSE	X	X	X		X		X	—	X
RLB + SSE	X	X	X					—	X
ATWS	X	X	X	X	X	X	X	X	X

Table Notes:

Other plant "systems" which can be relied upon to help mitigate a pipe break or ATWS event include Primary and Secondary Containment, Automatic Depressurization System, Containment Isolation System, Containment Atmosphere Control, Alternate Rod Insertion, and Standby Gas Treatment System but these are similar for all plants and not directly affected by IGSCC failures inside the reactor vessel.

Unless indicated below, the listed systems connect directly to the reactor vessel and provide a direct flow path for coolant. Those systems used during accident mitigation but not directly connecting to the reactor vessel include:

System	Connects to RV Via
Core Flood (Standby Coolant) System	RHR (Recirc path)
Reactor Core Isolation Cooling (RCIC)	Feedwater
Shutdown Cooling System	Recirculation (Discharge)
Residual Heat Removal (RHR)	Recirculation (Discharge)

Head spray and RWCU systems do not have adequate flow capacities to mitigate these initiating events and are not considered herein.

SLC is used when a scram is not achieved. However, it is still listed with a dash (-) indicating it is not anticipated to be used but is available if necessary.

a. Steam driven feedwater pumps are typical of BWR/5 plants. Therefore, the feedwater system is not available as indicated above since there is insufficient steam flow to properly run the feedwater pumps during any initiating event (except during an ATWS) or any initiating event plus SSE or SSE since the balance-of-plant portion of the feedwater system is not an engineered safety system.

b. Due to the indicated initiating event, there is insufficient steam flow to properly operate the system pumps.

Table 5-6. Typical BWR/6 systems to be relied upon to mitigate initiating events.

Initiating Event	Typical BWR/6 Design								
	High Pressure ECC Spray (HPCS)	Low Pressure ECC Spray (LPCS)	Low Pressure ECC Flood (LPCI)	Feedwater (FW)[a]	Recirculation[b]	RCIC[c]	RHR (Shutdown Cooling)	SLC	Core Flood System
MSLB	X	X	X		X		X	—	X
FWLB	X	X	X		X			—	X
RLB	X	X	X				X	—	X
SSE	X	X	X		X	X	X	—	X
MSLB + SSE	X	X	X		X		X	—	X
FWLB + SSE	X	X	X		X			—	X
RLB + SSE	X	X	X				X	—	X
ATWS	X	X	X	X	X	X	X	X	X

Table Notes:

Other plant "systems" which can be relied upon to help mitigate a pipe break or ATWS event include Primary and Secondary Containment, Automatic Depressurization System, Containment Isolation System, Containment Atmosphere Control, Alternate Rod Insertion, and Standby Gas Treatment System but these are similar for all plants and not directly affected by IGSCC failures inside the reactor vessel.

Unless indicated below, the listed systems connect directly to the reactor vessel and provide a direct flow path for coolant. Those systems used during accident mitigation but not directly connecting to the reactor vessel include:

System	Connects to RV Via
Core Flood (Standby Coolant System)	RHR (Feedwater path)
Reactor Core Isolation Cooling (RCIC)	Feedwater
Residual Heat Removal (RHR)	Feedwater

Head spray and RWCU systems do not have adequate flow capacities to mitigate these initiating events and are not considered herein.

SLC is used when a scram is not achieved. However, it is still listed with a dash (-) indicating it is not anticipated to be used but is available if necessary.

a. Steam driven feedwater pumps are typical of BWR/5 plants. Therefore, the feedwater system is not available as indicated above since there is insufficient steam flow to properly run the feedwater pumps during any initiating event (except during an ATWS) or any initiating event plus SSE or SSE since the balance-of-plant portion of the feedwater system is not an engineered safety system.

b. The recirculation system for BWR/6 plants does not provide a flow path for other accident mitigation systems as it does in earlier BWRs.

c. Due to the indicated initiating event, there is insufficient steam flow to properly operate the system pumps.

6. FAILURE MODE DETERMINATION

Sections 3 and 4 of this report have discussed past IGSCC-induced reactor vessel internals failures. As operating BWR plants continue to age, the number of IGSCC-induced failures is expected to increase. As a result of these failures, various safety concerns have been identified for operating BWRs. To date, most of the safety concerns have been focused on core shroud degradation. However, it is recognized that a cascading failure or common mode failure of other reactor vessel internals could also have a significant effect on plant safety. Therefore, this investigation evaluates various possible combinations of failures of all reactor vessel internals. These evaluations consider failure during normal operation and also during potential initiating events such as those described in Section 5. IGSCC-induced failures may lead to situations that are beyond the design basis of a plant. Therefore, the NRC has recognized the need to assess the potential consequences and risk of IGSCC-induced reactor vessel internals failures. This type of evaluation needs to be performed for beyond-design basis situations in order to assess the potential increase in risk to the public, using either an increase in core damage frequency (CDF) or a potential increase in risk for offsite dose.

This report section describes the approach used to identify the potential consequences associated with the single and common mode failure of IGSCC-susceptible BWR reactor vessel internals when subjected to normal operation and accident-loading conditions such as one of the LOCAs or an SSE. This evaluation process generates many scenarios and all scenarios are considered significant until a screening process is applied to determine those scenarios which are truly significant contributors to the risk evaluations. The risks evaluations associated with those scenarios identified as significant are addressed in Section 7 of this report.

6.1 Assumptions Made in Identifying the Consequences of IGSCC-Induced Failures

Various assumptions had to be made in order to initiate the process of identifying failure scenarios. First of all, the determination of which types of failures were to be considered had to be made. Obviously, single failures of all reactor internals had to be considered. This is what has actually occurred to date in operating BWR plants. For these cases, single failure was defined as the specific reactor vessel internal under consideration not being able to perform its intended function. This function could include supporting other internals (and the resulting consequences), providing a flow path for coolant, providing a boundary for the coolant, etc. After the single failure scenarios were identified, common mode failures were considered. Common mode failures were defined as those multiple reactor vessel internals of identical or similar design which have incurred significant and similar degradation and which could simultaneously fail due to a common loading occurrence, such as an SSE or LOCA. Their potential to simultaneously fail results from their similarity of design, duration of use (aging), and potential for similar degradation by IGSCC. As was the case for single failure, common mode failure of internals also means that these internals can no longer perform their intended function. Simultaneous arbitrary failures of multiple different internals were not considered in this evaluation. The probability of such a catastrophic event was considered to be too low for a significant effect on risk increase and the ultimate scenario for such an initial assumption would be the failure of all the internals at one time which does not provide any useful insights for the consequences and mitigation of IGSCC degradation.

Once an internal or similar internals fail due to IGSCC, then the next consideration was whether or not that failed internal or multiple internals could interact with other reactor vessel internals. Evaluations made not considering interaction with other internals after the initial failure were termed "without cascading effects". Evaluations made considering interaction with other internals after the initial failure were termed "with cascading effects". The evaluations made "with cascading effects" include the failure

of other different internals that may or may not have been degraded by IGSCC; but the failure of the other internal or internals is the direct result of the initial failed component either displacing, coming into contact with, or impacting the other internals. Therefore, multiple failures of different internals have been considered in this task but under more probable circumstances than the simultaneous arbitrary IGSCC-induced failures of multiple different internals. A generally accepted limiting factor made in the cascading scenarios is that a smaller or equal-sized internal will not possess sufficient energy to make another internal nonfunctional. For example, it is assumed that a loose part generated from the failure of small in-core instrument tubing will not damage the larger-diameter core spray piping.

The consequences of the IGSCC-induced internal(s) failures were developed with "typical" plants in mind. All evaluations were made using tables for a concise presentation of the data. If unique BWR design differences existed, table footnotes were used to highlight the significance of those design differences. Two major BWR design differences are noted in Table 2-1 for the "typical" BWR plants. An important unique design feature was associated with the BWR/4, 5, and 6 plant designs. Typically, for most BWRs, the injection of SLC is into the lower plenum through a reactor vessel bottom head penetration. However, for certain BWR/4, 5, and 6 plants, SLC is injected through either the core spray (BWR/4s) or HPCS (BWR/5s and 6s) lines. Since some of the scenarios resulted in only core spray or HPCS lines becoming non-functional, it was necessary to incorporate this design variation into the scenario consequences process. Another plant-specific design variation of interest was for the HPCI system on BWR/4 plants. Typically, HPCI is injected through the feedwater system. However, there are three BWR/4 units (Limerick 1 & 2 and Hope Creek) that inject HPCI through the feedwater system and the core spray system. Since this unique design provided additional ECC injection pathways inside the core shroud, this feature was not addressed in the scenario consequences because the risk to public safety was not believed to increase. In fact, utilities with plants incorporating this unique design feature may be able to demonstrate that some of the final scenarios are not applicable to them, and those plants would have a lower safety risk.

The potential for loose parts from IGSCC-degraded internals causing concerns was incorporated into the development of every failed internal. For every failed internal, one scenario assumed that loose parts jammed more than the maximum number of control rods/control rod drives that are allowed to be inoperable per safety regulations, making a full and complete scram impossible. This was believed to be a reasonable assumption since the number of loose parts or the size of the loose parts that could jam a control rod could be very minimal. Loose parts were also assumed to block coolant pathways. However, it was assumed that the loose parts could not block enough pathways to cause fuel damage. This assumption was based on the belief that with a number of relatively small loose parts, an insufficient number of coolant pathways could be totally blocked causing fuel damage. In addition, the capability of coolant flowing horizontally within the core to help provide additional cooling was also assumed to be an important contributor to helping prevent fuel damage. Loose parts scenarios were also incorporated into succeeding scenarios with cascading effects for those failed internals that are located within the core region or the lower plenum (including the jet pump nozzle which could crack into loose parts and be injected into the lower plenum). This seemed to be a reasonable assumption due to the close proximity of the failed components and the control rods/control rod drives and the coolant flow channels around the fuel assemblies.

The list of possible consequence scenarios was developed in an attempt to cover a broad list of possible situations that could result from IGSCC degradation of reactor vessel internals. However, it is unreasonable to try to include all possible combinations of situations or the number of scenarios would become unmanageable. Therefore, the process used herein specified a number of reasonable scenarios that could occur and then these were followed by an assumed worst case damage scenario in order to provide some conservatism to the evaluation process and to limit the actual number of scenarios being considered.

The identified failure scenarios did not specify exact step-by-step details of how each scenario occurred or whether every scenario was physically accurate. If a possibility existed that a failed internal could render another internal nonfunctional, that assumption was made. If those scenarios were ultimately determined not to be a significant contributor to risk, then the assumption was of no importance. If the scenario was determined to be a significant contributor to risk, then a more detailed evaluation can be made at a later date to predict the worst case damage that could be expected from the scenario. The scenarios frequently use the term "break" which was intended to convey the possibility of cracking, splitting, breaking apart, deforming, displacing, or any other action that would produce the consequences described.

With the exception of the initiating event (e.g. MSLB, FWLB, RLB, etc.), all other failure sequences are assumed to be within the confines of the reactor vessel and are a direct result of the initiating IGSCC failure(s). In addition, the evaluations made herein focus on the pathways of coolant injection into and within the reactor vessel, not on the source of coolant or its availability outside of the reactor vessel.

The reactor vessel internals considered do not include any items added to help mitigate the effects of IGSCC degradation, including core shroud tie rods, core shroud clamps (for Brunswick 1 & 2), core spray line or sparger clamps, jet pump clamps, etc. The specific type of modification or repair is very plant unique and would add a significant amount of confusion if incorporated into the identified scenarios. As these added components age, there is the potential that some of these items could also become susceptible to IGSCC degradation. However, for this evaluation, these items were not assumed to cause initiating or cascading internal failures.

One situation not specifically addressed when evaluating the consequences of IGSCC-induced reactor vessel internals was the possibility of internal(s) failing during refueling outages when the reactor vessel top head is removed. Although the mitigation systems are still available (e.g. core spray, LPCS, HPCS, etc.) during refueling operations, specific refueling scenarios were not included in the generated tables. Instead, the beyond-design-basis common mode scenario associated with the fuel assemblies is believed to address the most probable scenario that could potentially occur during refueling. This specific scenario addresses the situation where a significant loading causes sufficient core displacement or deformation to prevent adequate core cooling. Any further damage or loss of other critical systems or components associated with a potential refueling accident is believed to be addressed by other existing scenarios, especially those identified with core shroud support, core shroud, and core plate failures.

6.2 System Failures

As a first step in determining the consequences of IGSCC-induced failures of internals, the potential loss or significant degradation of systems used for reactor control and accident mitigation were considered. Table 6-1 shows which systems inside the reactor vessel are anticipated to fail if any of the internals fail, either singly or in common mode. As can be seen, all the systems may potentially become unavailable during virtually all of the initiating events. Only the ATWS event allows most of the systems (excluding scram) to remain functional during that event. Table 6-1 clearly highlights the potential safety concern of IGSCC-induced failure(s) of reactor internal(s). Table 6-1 was developed assuming that any of the five largest internals, including the core shroud support, core shroud, core shroud head, core plate, and top guide, could potentially crack, fail, and displace, impacting other internals and causing those other internals to become nonfunctional or have their performance seriously degraded.

In order to better understand the potential of IGSCC-induced failure(s) on the functionality of systems, Table 6-2 was developed. For Table 6-2, it was assumed that the five major components described above do not fail. The results of this second evaluation still indicate that all systems potentially

Table 6-1. Potential failures of BWR in-vessel systems resulting from single or common mode failures of IGSCC-affected reactor internals.[a]

	System[b] Failures										
Initiating Event	Control Rod Drive System	In-Core Nuclear Monitors	High Pressure ECC Delivered Into Annulus	High Pressure ECC Delivered Inside Core Shroud	ECC Low Pressure Spray Delivered Inside Core Shroud	ECC Low Pressure Flood Delivered Into Lower Plenum	ECC Low Pressure Flood Delivered Inside Core Shroud	Feedwater Delivered Into Annulus	Recirc Delivered Into Lower Plenum	SLC Delivered Into Lower Plenum	SLC Delivered Inside Core Shroud
MSLB	X	X	X	X	X	X	X	X	X	X	X
FWLB	X	X	X	X	X	X	X	X	X	X	X
RLB	X	X	X	X	X	X	X	X	X	X	X
SSE	X	X	X	X	X	X	X	X	X	X	X
MSLB + SSE	X	X	X	X	X	X	X	X	X	X	X
FWLB + SSE	X	X	X	X	X	X	X	X	X	X	X
RLB + SSE	X	X	X	X	X	X	X	X	X	X	X
ATWS	X										

Table Notes:

Recirc – recirculation

a. For this evaluation, all internals are potentially susceptible to IGSCC failure, excluding fuel assemblies and neutron source holders.

b. Only those systems with components inside the reactor vessel are listed. Systems not directly susceptible to IGSCC reactor internals failures are not listed. The recirculation system is included because it provides (via the in-vessel jet pumps) a path for emergency coolant (e.g. LPCI) into the lower plenum and it maintains the post-accident core flooding capability under design bases.

X - System fails to function during indicated initiating event. Blank indicates system is functional for mitigation purposes.

Table 6-2. Potential failures of BWR in-vessel systems resulting from single or common mode failures of IGSCC-affected reactor internals excluding five major internals.[a]

	System[b] Failures										
Initiating Event	Control Rod Drive System	In-Core Nuclear Monitors	High Pressure ECC Delivered Into Annulus	High Pressure ECC Delivered Inside Core Shroud	ECC Low Pressure Spray Delivered Inside Core Shroud	ECC Low Pressure Flood Delivered Into Lower Plenum	ECC Low Pressure Flood Delivered Inside Core Shroud	Feedwater Delivered Into Annulus	Recirc Delivered Into Lower Plenum	SLC Delivered Into Lower Plenum	SLC Delivered Inside Core Shroud
MSLB	X	X	X	X	X	X	X	X	X	X	X
FWLB	X	X	X	X	X	X	X	X	X	X	X
RLB	X	X	X	X	X	X	X	X	X	X	X
SSE	X	X	X	X	X	X	X	X	X	X	X
MSLB + SSE	X	X	X	X	X	X	X	X	X	X	X
FWLB + SSE	X	X	X	X	X	X	X	X	X	X	X
RLB + SSE	X	X	X	X	X	X	X	X	X	X	X
ATWS	X										

Table Notes:

Recirc – recirculation

a. For this evaluation, all internals are potentially susceptible to IGSCC failure, excluding fuel assemblies and neutron source holders. For purposes of insight, this evaluation excludes the failure of the core shroud support, core shroud, core plate, top guide, and core shroud head.

b. Only those systems with components inside the reactor vessel are listed. Systems not directly susceptible to IGSCC reactor internals failures are not listed. The recirculation system is included because it provides (via the in-vessel jet pumps) a path for emergency coolant (e.g. LPCI) into the lower plenum and it maintains the post-accident core flooding capability under design bases.

X - System fails to function during indicated initiating event. Blank indicates system is functional for mitigation purposes.

fail under virtually all initiating events with the exception of ATWS. This time, rather than the large single components displacing and eliminating system functionality, common mode failures (which cumulatively increase the mass of failed internals and thereby the damage potential from impact) of jet pump components or LPCI components were typically required in order to eliminate the functionality of various systems. It is still considered possible that all of the accident mitigation systems can become nonfunctional.

Tables 6-1 and 6-2 highlight that IGSCC-induced internals that fail can indeed potentially result in severe safety consequences. Both tables also indicate a need to better understand the specific interactions of failed internals in order to more clearly understand which systems are or are not functional during normal operation and the initiating events.

6.3 Mechanistic Failures

The next step in determining the consequences of IGSCC-induced failures of reactor internals was to develop "mechanistic" failure scenarios (i.e., the potential results of physical impacts/interactions between various reactor vessel internals resulting in significant degradation or failures). In order to clarify the consequences of various internals failing, Table 6-3 was generated. Table 6-3 describes what could happen if certain reactor internals failed. Failure consequences were determined that could initiate an accident or result in damage to systems that mitigate accidents. These consequences include small-break LOCAs, fuel movement or deformation, prevention of proper control rod motion, prevention of the maintenance of the two-thirds core reflood height, impairment of the ECC system, prevention of proper SLC operation, rerouting of coolant flow from where desired, and actual blocking of coolant flow. To simply list the resulting scenarios that incorporated the various consequences of failed internals in a single table appeared to be a very complex effort. That one-step effort could easily result in the reader not obtaining a precise understanding of the process used to generate the scenarios.

Therefore, a multi-step process was followed which ultimately generated four tables which describe the consequences of IGSCC-induced failures. This multi-step process incorporates which loadings were being considered and whether or not cascading effects were being considered. The table below indicates which of the scenario tables considered what options.

Loadings Considered	Without Cascading Effects	With Cascading Effects
Normal Operation	Table A-1	Table A-3
Accident Conditions	Table A-2	Table A-4

The tables were generated in the numerical sequence indicated, each succeeding table being generated based on the lessons learned from developing the prior table. All four of these tables are located in Appendix A. The first two tables, Tables A-1 and A-2, evaluated whether or not certain systems would potentially be or not be functional during normal (Table A-1) and then accident conditions (Table A-2) without including cascading effects. "Without cascading effects" means that the failed internal(s) do not impact or interact with other internals. It was assumed that the failed internal(s) simply no longer perform their intended function. The reason for considering normal operation separately from accident conditions is that some systems of interest lose their functionality during specific initiating events. The last two tables, Tables A-3 and A-4, evaluate whether or not certain systems would potentially be or not be functional during normal (Table A-3) and then accident conditions (Table A-4)

Table 6-3. Effects of single and common mode internal failures including cascading effects.

Reactor Vessel Internal Components	Results of Component Failures							
	Initiate Small-Break LOCA	Cause Fuel Movement	Prevent Proper Control Rod Motion	Prevent 2/3 Core Reflood[a]	Impair ECCS Operation	Prevent SLC Operation	Reroute Coolant Flow	Block Coolant Flow
In-Core Instrument Housing	X							
In-Core Instrument Guide Tube								
IRM / SRM / LPRM Tube	X							
Core dP Line						X[10]		
SLC Line						X		
CRD Blade			X					X
CRD Housing	X	X[1]	X					
CRD Guide Tube		X[1]	X					
CRD Stub Tube	X	X[1]	X					
Fuel Support		X	X					
Core Shroud Support		X	X	X	X	X[11]	X[13]	X
Access Hole Cover				X			X[13]	
Core Plate		X	X			X[10]		X
Core Shroud		X	X	X	X	X[11]	X[13]	X
Core Shroud Head					X	X[12]	X[13]	X
Core Shroud Head Bolt					C	C[12]	C[13]	C
Guide Rod								
Top Guide or Grid		X	X		X			X
Core Spray, HPCS, or LPCS Annulus Pipe					X[5]	X[12]	X[13]	
Core Spray, HPCS, or LPCS Inside Shroud (Sparger)					X[6]	X[12]		
LPCI Coupling (BWR/5s and 6s)					X		X[13]	
Feedwater Sparger				X[2]	X[7]		X[14]	
Jet Pump Components (Not in BWR/2s)				X[3]	X[8]		X[15]	
Steam Separator Standpipe					X[9]		X[13]	

Table 6-3. (continued).

Reactor Vessel Internal Components	Results of Component Failures							
	Initiate Small-Break LOCA	Cause Fuel Movement	Prevent Proper Control Rod Motion	Prevent 2/3 Core Reflood[a]	Impair ECCS Operation	Prevent SLC Operation	Reroute Coolant Flow	Block Coolant Flow
Steam Separator					X[9]		X[13]	
Steam Dryer Assembly								
Head Spray								
Surveillance Specimen Holder				X[4]			X[4]	

Table Notes:

Reactor vessel internals not considered for IGSCC failure in this table include neutron source holders.

a. This failure result considers maintaining the boundary necessary for 2/3 core reflood, not the ability to inject ECC for 2/3 core reflood.

X Single or common mode failures could result in this consequence.

C Single component failure is not a significant concern, but common mode failures could result in this consequence.

1 The CRD stub tube, housing, and guide tube provide vertical support for the fuel support pieces and fuel assemblies.

2 Feedwater sparger could impact jet pumps in annulus and cause damage sufficient to lower the core reflood level.

3 On BWR/3s, 4s, 5s, and 6s, the jet pumps are part of the 2/3 core reflood boundary.

4 IGSCC failure results in specimen holder impacting access hole cover and causing new coolant pathway.

5 On BWR/2s, 3s, and 4s, the amount of core spray delivered inside the core shroud is reduced by half if single failure is assumed.

6 Potential reduced spray effectiveness.

7 Only on plants with HPCI entering reactor vessel through feedwater.

8 BWR/3s and 4s have LPCI through the jet pumps and into the lower plenum but the jet pump's "ram's head" could also displace and impact the core spray lines. On BWR/5s and 6s, the jet pump's "ram's head" could impact LPCS, HPCS, and the LPCI lines in the annulus.

9 These smaller internals are still considered large enough to impact other adjacent internals degraded by IGSCC and eliminate their functionality.

10. Eliminates functionality of SLC entering the lower plenum and supported by the core shroud support or core shroud.

11 Eliminates functionality of SLC entering through either the lower plenum or one of the core spray lines.

Table 6-3. (continued).

Reactor Vessel Internal Components	Results of Component Failures							
	Initiate Small-Break LOCA	Cause Fuel Movement	Prevent Proper Control Rod Motion	Prevent 2/3 Core Reflood[a]	Impair ECCS Operation	Prevent SLC Operation	Reroute Coolant Flow	Block Coolant Flow

12 Eliminates functionality of SLC entering through one of the core spray lines.

13 After IGSCC failure of the component, coolant flow could be rerouted into the water-filled annulus outside the shroud or into the upper region above the core shroud head due to a greater pressure inside the lower plenum or core shroud than in the annulus or core shroud head regions.

14 IGSCC failure results in sparger impacting jet pumps or core shroud head and head bolts which results in coolant leakage into the annulus.

15 IGSCC failure results in rerouting coolant flow into annulus rather than lower plenum.

incorporating cascading effects. These tables consider the possibilities that the failed internal(s) break, and then interact or impact other internals that may or may not be IGSCC-degraded.

6.4 Screening Criteria to Determine the Final Scenarios with Significant Contribution to Risk

Table A-4 is the final culmination of the determination of the various scenarios that could result from the failure of IGSCC-degraded reactor internals. This table contains nearly 250 different and unique scenarios. However, such a large number of scenarios means that a significant amount of time could be spent trying to determine whether or not all of those scenarios are truly significant contributors to increasing the core damage frequency or offsite dose risk to the public as a result of IGSCC-degraded internal(s) failure. Therefore, in order to reduce the number of scenarios that will be considered for further detailed risk evaluation, a screening logic process was created which identifies those aspects that are important to safety.

Figure 6-1 illustrates the screening logic developed. Five criteria were identified that are believed to cover the most important issues necessary to adequately address public safety with regards to reactor vessel internal(s) failures. The first criteria is whether the scenario allows the core reactivity to be controlled by a scram and by the injection of SLC. The second criteria deals with the ability of the resulting core geometry (post-internal failure) to be properly cooled to avoid core damage during the identified scenario. A corollary to the issue of adequate core cooling is the ability of SLC being able to infiltrate where necessary inside the core region in order to adequately reduce core reactivity. The third criteria deals with the capability of maintaining an adequate floodable region so that core cooling can be achieved during the identified scenario.

The fourth criteria is whether or not the ECC system is able to provide coolant inside the core shroud during the scenario. The ability to inject ECC is necessary, but since IGSCC-induced internal(s) failures can yield situations beyond the design basis of the plant, there is no assurance that the entire ECC system will be functional as expected during initiating events. Therefore, for these potential beyond-design-basis situations in combination with the possibility of other internals not functioning properly, it was decided that the ability to inject ECC inside the core shroud is a necessity. Since power plant operations may allow the short term unavailability of an ECC system for repair or maintenance, it was also decided that at least two independent pathways for ECC injection inside the core shroud should exist as a minimum acceptable criteria for adequate mitigation capabilities. That way, in the event of repair, maintenance, or arbitrary component failure, at least one ECC injection pathway would exist at all times. The assumption was made that the ECC injection did not require specific spray patterns to be effective, just as long as ECC got inside the core shroud. GE was able to confirm the validity of this assumption during a meeting held on March 14, 1997 (GE, 1997). The fifth and last criteria to be considered was the ability of the one remaining ECC injection pathway (the one of the two remaining pathways with the smaller flow capacity) to provide adequate cooling for the specific initiating events under consideration. Per the meeting with GE (GE,1997), any one remaining ECC injection pathway does indeed provide adequate cooling capacity. Therefore, the screening criteria are complete, valid, and adequate.

The screening logic was applied to all of the internal failures considered in Tables A-1 through A-4. Table 6-4 lists 148 scenarios which were not eliminated by the screening logic. These scenarios are considered to be the scenarios that are significant contributors to increasing the risk to the public with respect to BWR plant safety if IGSCC-induced failures occur to reactor vessel internals. Since Table A-4 lists the most specific details for each scenario, those scenario descriptions were also utilized in Table 6-4. Table 6-4 also lists the reasons for the scenario selection, along with any remaining ECC capabilities if the ECC capability has been reduced from design-basis conditions.

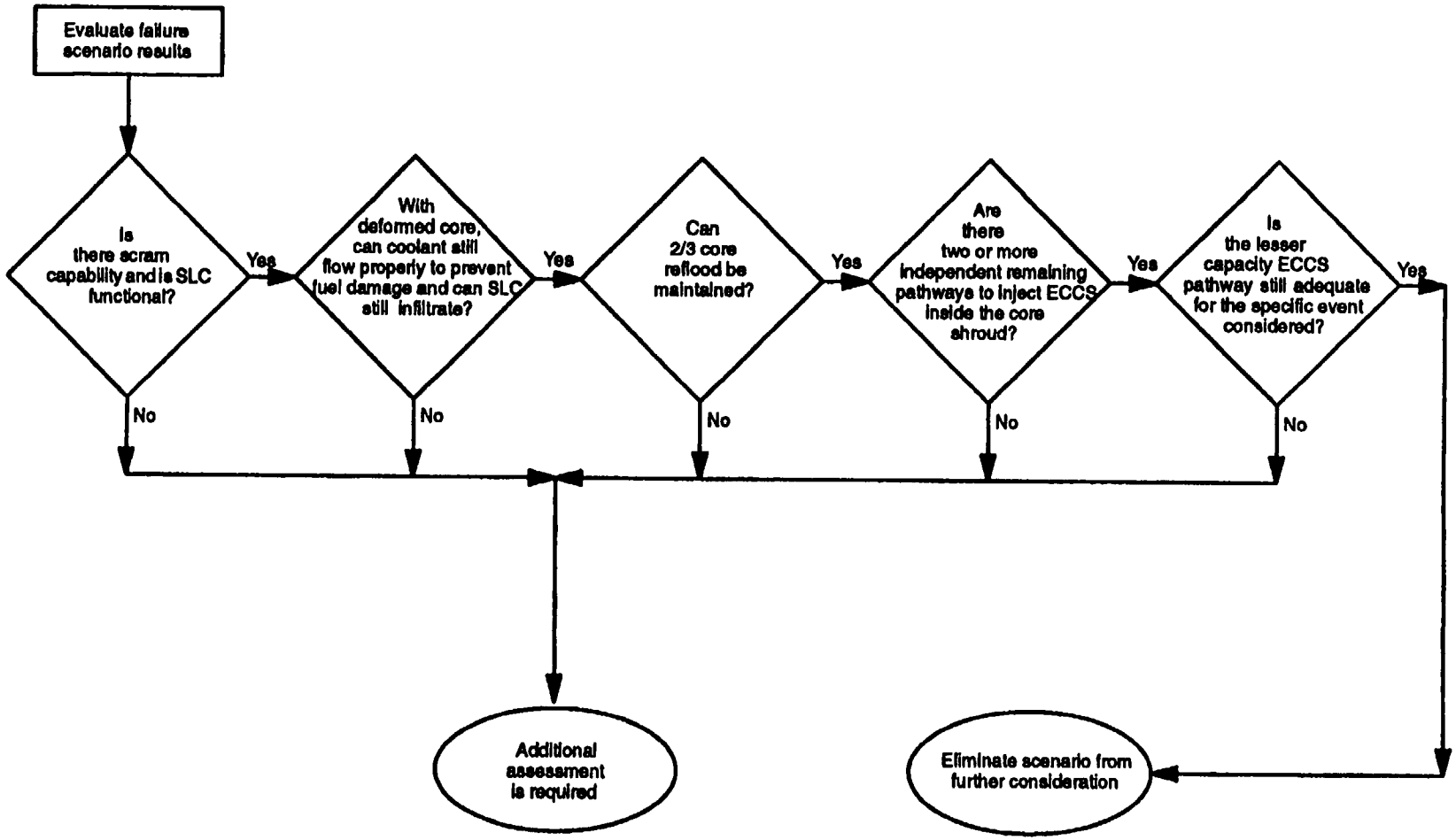

Figure 6-1. Screening logic for the elimination of low-safety-impact scenarios during initiating events.

Table 6-4. BWR IGSCC-induced internals failure consequence assessments.

Scenario Number	IGSCC-Induced Internals Single and Cascading Failure Scenarios of Concern	Reason for Selection	Consequences of Failure
	In-Core Instrument Housings		
1	Parts break off and jam more than MANNF CRDs	No full scram capability	Mechanical failure of RPS (ATWS)
2	One housing breaks, loss of RPV pressure boundary and associated instrumentation results, and loose parts jam more than MANNF CRDs	No full scram capability	Mechanical failure of RPS (ATWS) and small break LOCA
3	One housing breaks, loss of RPV pressure boundary and associated instrumentation results, and loose parts jam more than MANNF CRDs and block coolant flow in no more than MANBC pathways	No full scram capability and no SLC capability in MANBC pathways	Mechanical failure of RPS (ATWS) and small break LOCA with possible reduced SLC capability and possible isolated direct fuel damage
4	Common Mode: Some significant number of in-core instrument housings break with loss of RPV pressure boundary significantly challenging coolant makeup capabilities and potentially lowering core reflood levels, loss of associated instrumentation results, and loose parts jam more than MANNF CRDs and block coolant flow in no more than MANBC pathways	SLC may not function as intended (significant coolant flow out bottom head) and no full scram capability Core reflood level cannot be maintained	Mechanical failure of RPS (ATWS) and LOCA with possible SLC failure and possible isolated direct fuel damage
	In-Core Instrument Guide Tube		
5	Parts break off and jam more than MANNF CRDs	No full scram capability	Mechanical failure of RPS (ATWS)
6	One guide tube breaks, loss of associated instrumentation results, and loose parts jam more than MANNF CRDs	No full scram capability	Mechanical failure of RPS (ATWS)
7	One guide tube breaks, loss of associated instrumentation results, and loose parts jam more than MANNF CRDs and block coolant flow in no more than MANBC pathways	No full scram capability and no SLC capability in MANBC pathways	Mechanical failure of RPS (ATWS) and possible isolated direct fuel damage
8	Common Mode: Some significant number of guide tubes break, loss of associated instrumentation results, and loose parts jam more than MANNF CRDs and block coolant flow in no more than MANBC pathways	No full scram capability and no SLC capability in MANBC pathways	Mechanical failure of RPS (ATWS) and possible isolated direct fuel damage
	IRM / SRM / LPRM Tube		
9	Parts break off and jam more than MANNF CRDs	No full scram capability	Mechanical failure of RPS (ATWS)
10	One tube breaks, loss of RPV pressure boundary and associated instrumentation results, and loose parts jam more than MANNF CRDs	No full scram capability	Mechanical failure of RPS (ATWS) and small break LOCA
11	One tube breaks, loss of RPV pressure boundary and associated instrumentation results, and loose parts jam more than MANNF CRDs and block coolant flow in no more than MANBC pathways	No full scram capability and no SLC capability in MANBC pathways	Mechanical failure of RPS (ATWS) and small break LOCA with possible reduced SLC capability and possible isolated direct fuel damage

Table 6-4. (continued).

Scenario Number	IGSCC-Induced Internals Single and Cascading Failure Scenarios of Concern	Reason for Selection	Consequences of Failure
12	Common Mode: Some significant number of tubes break with loss of RPV pressure boundary challenging coolant makeup capabilities, loss of associated instrumentation results, and loose parts jam more than MANNF CRDs and block coolant flow in no more than MANBC pathways	No full scram capability and no SLC capability in MANBC pathways	Mechanical failure of RPS (ATWS) and LOCA with possible SLC failure and possible isolated direct fuel damage
	Core dP Line		
13	Parts break off and jam more than MANNF CRDs	No full scram capability	Mechanical failure of RPS (ATWS)
14	Core dP line breaks, doesn't measure dP correctly and eliminates functionality of SLC line	No SLC capability (SLC is available in those plants with SLC injection through core spray or HPCS)	SLC failure
15	Core dP line breaks and eliminates functionality of SLC line, doesn't measure dP correctly, and parts jam more than MANNF CRDs	No SLC and no full scram capability (SLC is available in those plants with SLC injection through core spray or HPCS)	Mechanical failure of RPS (ATWS) and SLC failure
16	Core dP line breaks and eliminates functionality of SLC line, doesn't measure dP correctly, and parts block coolant flow in no more than MANBC pathways	No SLC capability (SLC is available in those plants with SLC injection through core spray or HPCS)	SLC failure and possible isolated direct fuel damage
17	Core dP line breaks and eliminates functionality of SLC line, doesn't measure dP correctly, parts jam more than MANNF CRDs, and parts block coolant flow in no more than MANBC pathways	No SLC and no full scram capability (SLC is available in those plants with SLC injection through core spray or HPCS)	Mechanical failure of RPS (ATWS) and SLC failure with possible isolated direct fuel damage
	SLC Line		
18	Parts break off and jam more than MANNF CRDs	No full scram capability	Mechanical failure of RPS (ATWS)
19	SLC line breaks, cannot inject SLC, and eliminates functionality of core dP line	No SLC capability (SLC is available in those plants with SLC injection through core spray or HPCS)	SLC failure
20	SLC line breaks, cannot inject SLC, eliminates functionality of core dP line, and parts jam more than MANNF CRDs	No SLC and no full scram capability (SLC is available in those plants with SLC injection through core spray or HPCS)	Mechanical failure of RPS (ATWS) and SLC failure
21	SLC line breaks, cannot inject SLC, eliminates functionality of core dP line and parts block coolant flow in no more than MANBC pathways	No SLC capability (SLC is available in those plants with SLC injection through core spray or HPCS)	SLC failure and possible isolated direct fuel damage
22	SLC line breaks, cannot inject SLC, eliminates functionality of core dP line, parts jam more than MANNF CRDs, and parts block coolant flow in no more than MANBC pathways	No SLC and no full scram capability (SLC is available in those plants with SLC injection through core spray or HPCS)	Mechanical failure of RPS (ATWS) and SLC failure with possible isolated direct fuel damage

Table 6-4. (continued).

Scenario Number	IGSCC-Induced Internals Single and Cascading Failure Scenarios of Concern	Reason for Selection	Consequences of Failure
	CRD Blade		
23	Parts break off and jam more than MANNF CRDs	No full scram capability	Mechanical failure of RPS (ATWS)
24	One control rod blade deforms, jams that CRD and blocks coolant flow and other parts break off and jam more than MANNF other CRDs	No full scram capability	Mechanical failure of RPS (ATWS)
25	One control rod blade deforms, jams that CRD and blocks coolant flow, other parts break off and jam more than MANNF other CRDs, and other parts block coolant flow in no more than MANBC total pathways	No full scram capability and no SLC capability in MANBC pathways	Mechanical failure of RPS (ATWS) and possible isolated direct fuel damage
26	Common Mode: Some significant number of control rod blades deform and their insertion or withdrawal is eliminated, and coolant flow is blocked in more than MANBC pathways	No full scram capability Coolant flow blockage	Mechanical failure of RPS (ATWS) and possible isolated direct fuel damage
	CRD Housing		
27	Parts break off and jam more than MANNF CRDs	No full scram capability	Mechanical failure of RPS (ATWS)
28	One housing breaks and does not support fuel support piece and fuel assembly, loss of RPV pressure boundary and single CRD insertion or withdrawal results, and loose parts jam more than MANNF other CRDs	No full scram capability	Mechanical failure of RPS (ATWS) and small break LOCA
29	One housing breaks and does not support fuel support piece and fuel assembly, loss of RPV pressure boundary results, single control rod drops, and loose parts jam more than MANNF other CRDs	No full scram capability	Mechanical failure of RPS (ATWS) and small break LOCA
30	One housing breaks and does not support fuel support piece and fuel assembly, loss of RPV pressure boundary and single control rod insertion or withdrawal results, and loose parts jam more than MANNF other CRDs and block coolant flow in no more than MANBC pathways	No full scram capability and no SLC capability in MANBC pathways	Mechanical failure of RPS (ATWS) and small break LOCA with possible isolated direct fuel damage and possible reduced SLC capability
31	One housing breaks and does not support fuel support piece and fuel assembly, loss of RPV pressure boundary results, single control rod drops, and loose parts jam more than MANNF other CRDs and block coolant flow in no more than MANBC pathways	No full scram capability and no SLC capability in MANBC pathways	Mechanical failure of RPS (ATWS) and small break LOCA with possible isolated direct fuel damage and possible reduced SLC capability

Table 6-4. (continued).

Scenario Number	IGSCC-Induced Internals Single and Cascading Failure Scenarios of Concern	Reason for Selection	Consequences of Failure
32	Common Mode: Some significant number of CRD housings break with loss of RPV pressure boundary significantly challenging coolant makeup capabilities and potentially lowering core reflood levels, fuel support pieces and fuel assemblies are not properly supported, more than MANNF control rods drop and/or the loss of functionality of more than MANNF CRDs result and coolant flow is blocked in no more than MANBC pathways	SLC may not function as intended (significant coolant flow out bottom head) and no full scram capability Core reflood level cannot be maintained	Mechanical failure of RPS (ATWS) and LOCA with possible isolated direct fuel damage and possible SLC failure
	CRD Guide Tube		
33	Parts break off and jam more than MANNF CRDs	No full scram capability	Mechanical failure of RPS (ATWS)
34	One guide tube breaks and does not support fuel support piece and fuel assembly, loss of single control rod insertion or withdrawal results, and loose parts jam more than MANNF other CRDs	No full scram capability	Mechanical failure of RPS (ATWS)
35	One guide tube breaks and does not support fuel support piece and fuel assembly, loss of single control rod insertion or withdrawal results, and loose parts jam more than MANNF other CRDs and block coolant flow in no more than MANBC pathways	No full scram capability and no SLC capability in MANBC pathways	Mechanical failure of RPS (ATWS) and possible isolated direct fuel damage
36	Common Mode: Some significant number of guide tubes break and do not support fuel support pieces and fuel assemblies, loss of the functionality of more than MANNF CRDs result, and coolant flow is blocked in no more than MANBC pathways	No full scram capability and no SLC capability in MANBC pathways	Mechanical failure of RPS (ATWS) and possible isolated direct fuel damage
	CRD Stub Tube		
37	Parts break off and jam more than MANNF CRDs	No full scram capability	Mechanical failure of RPS (ATWS)
38	One CRD stub tube breaks and does not support fuel support piece and fuel assembly, loss of RPV pressure boundary and single control rod insertion or withdrawal results, and loose parts jam more than MANNF other CRDs	No full scram capability	Mechanical failure of RPS (ATWS) and small break LOCA
39	One CRD stub tube breaks and does not support fuel support piece and fuel assembly, loss of RPV pressure boundary results, single control rod drops, and loose parts jam more than MANNF other CRDs	No full scram capability	Mechanical failure of RPS (ATWS) and small break LOCA
40	One CRD stub tube breaks and does not support fuel support piece and fuel assembly, loss of RPV pressure boundary and single control rod insertion or withdrawal results, and loose parts jam more than MANNF other CRDs and block coolant flow in no more than MANBC pathways	No full scram capability and no SLC capability in MANBC pathways	Mechanical failure of RPS (ATWS) and small break LOCA with possible isolated direct fuel damage and possible reduced SLC capability

Table 6-4. (continued).

Scenario Number	IGSCC-Induced Internals Single and Cascading Failure Scenarios of Concern	Reason for Selection	Consequences of Failure
41	One CRD stub tube breaks and does not support fuel support piece and fuel assembly, loss of RPV pressure boundary results, single control rod drops, and loose parts jam more than MANNF other CRDs and block coolant flow in no more than MANBC pathways	No full scram capability and no SLC capability in MANBC pathways	Mechanical failure of RPS (ATWS) and small break LOCA with possible isolated direct fuel damage and possible reduced SLC capability
42	Common Mode: Some significant number of CRD stub tubes break with loss of RPV pressure boundary significantly challenging coolant makeup capabilities and potentially lowering core reflood levels, fuel support pieces and fuel assemblies are not properly supported, more than MANNF control rods drop and/or the loss of functionality of more than MANNF CRDs result, and loose parts block coolant flow in no more than MANBC pathways	SLC may not function as intended (significant coolant flow out bottom head) and no full scram capability Core reflood level cannot be maintained	Mechanical failure of RPS (ATWS) and LOCA with possible isolated direct fuel damage and possible SLC failure
	CRD Index Tube and Spud		
43	Parts break off and jam more than MANNF CRDs	No full scram capability	Mechanical failure of RPS (ATWS)
44	One CRD index tube or spud breaks, single control rod cannot insert or withdraw, and loose parts jam more than MANNF other CRDs	No full scram capability	Mechanical failure of RPS (ATWS)
45	One CRD index tube or spud breaks, single control rod drops, and loose parts jam more than MANNF other CRDs	No full scram capability	Mechanical failure of RPS (ATWS)
46	One CRD index tube or spud breaks, single control rod cannot insert or withdraw, and loose parts jam more than MANNF other CRDs and block coolant flow in no more than MANBC pathways	No full scram capability and no SLC capability in MANBC pathways	Mechanical failure of RPS (ATWS) and possible isolated direct fuel damage
47	One CRD index tube or spud breaks, single control rod drops, and loose parts jam more than MANNF other CRDs and block coolant flow in no more than MANBC pathways	No full scram capability and no SLC capability in MANBC pathways	Mechanical failure of RPS (ATWS) and possible isolated direct fuel damage
48	Common Mode: Some significant number of CRD index tubes or spuds break, more than MANNF control rods drop and/or the loss of functionality results, and loose parts block coolant flow in no more than MANBC pathways	No full scram capability and no SLC capability in MANBC pathways	Mechanical failure of RPS (ATWS) and possible isolated direct fuel damage
	CRD Thermal Sleeve		
49	Parts break off and jam more than MANNF CRDs	No full scram capability	Mechanical failure of RPS (ATWS)
50	One thermal sleeve breaks and guide tube does not support fuel support piece and fuel assembly, single control rod cannot insert or withdraw, and loose parts jam more than MANNF other CRDs	No full scram capability	Mechanical failure of RPS (ATWS)

Table 6-4. (continued).

Scenario Number	IGSCC-Induced Internals Single and Cascading Failure Scenarios of Concern	Reason for Selection	Consequences of Failure
51	One thermal sleeve breaks and guide tube does not support fuel support piece and fuel assembly, single control rod cannot insert or withdraw, and loose parts jam more than MANNF other CRDs and block coolant flow in no more than MANBC pathways	No full scram capability and no SLC capability in MANBC pathways	Mechanical failure of RPS (ATWS) and possible isolated direct fuel damage
52	Common Mode: Some significant number of thermal sleeves break and guide tubes do not support fuel support pieces and fuel assemblies, more than MANNF control rods cannot insert or withdraw, and loose parts block coolant flow in no more than MANBC pathways	No full scram capability and no SLC capability in MANBC pathways	Mechanical failure of RPS (ATWS) and possible isolated direct fuel damage
	Fuel Support		
53	Parts break off and jam more than MANNF CRDs	No full scram capability	Mechanical failure of RPS (ATWS)
54	Common Mode: Some significant number of fuel supports break displacing the fuel assemblies, some significant number of control rods cannot insert or withdraw, and coolant flow is blocked around fuel assemblies	No full scram capability Coolant flow blockage	Mechanical failure of RPS (ATWS) and possible direct fuel damage
	Core Shroud Support		
55	Parts break off and jam more than MANNF CRDs	No full scram capability	Mechanical failure of RPS (ATWS)
56	Core shroud support breaks, allowing coolant leakage to flow from lower plenum to annulus and lowering core reflood level after a RLB	Core reflood level cannot be maintained	Diversion of HPCI and LPCI (CRD potentially operable)
57	Core shroud support breaks, displacing the core shroud, core plate, nuclear core, top guide, core shroud head, steam separators, steam dryers, and other internals attached to the core shroud support or core shroud, blocking coolant flow, eliminating the functionality of some significant number of control rods, jet pumps, feedwater spargers, SLC, core spray (including LPCS and HPCS) and LPCI lines which penetrate the core shroud and lowering the core reflood level after a RLB	No full scram capability and SLC failure Coolant flow blockage Core reflood level cannot be maintained No redundant ECC injection inside core shroud (No ECC is available in the worst case)	Mechanical failure of RPS (ATWS) with SLC failure and failure of LPCS, HPCI (or HPCS) and LPCI
	Access Hole Cover		
58	Parts break off and jam more than MANNF CRDs	No full scram capability	Mechanical failure of RPS (ATWS)
59	Access hole cover breaks and allows coolant leakage from lower plenum to annulus, lowering core reflood level after a RLB [N/A for BWR/2s]	Core reflood level cannot be maintained	Diversion of LPCS, HPCI and LPCI
60	Common Mode: All access hole covers break and allow coolant leakage from lower plenum to annulus, and lowering core reflood level after a RLB [N/A for BWR/2s]	Core reflood level cannot be maintained	Diversion of LPCS, HPCI and LPCI

Table 6-4. (continued).

Scenario Number	IGSCC-Induced Internals Single and Cascading Failure Scenarios of Concern	Reason for Selection	Consequences of Failure
	Core Plate		
61	Parts break off and jam more than MANNF CRDs	No full scram capability	Mechanical failure of RPS (ATWS)
62	Core plate breaks and tilts or partially displaces the nuclear core, eliminating the functionality of some significant number of control rods and creating coolant flow blockage	No full scram capability Coolant flow blockage	Mechanical failure of RPS (ATWS) with possible direct fuel damage
63	Core plate breaks off from core shroud support ledge, displacing the nuclear core, creating coolant flow blockage, and eliminating the functionality of SLC and some significant number of control rods	No full scram capability and SLC failure (SLC is available in those plants with SLC injection through core spray or HPCS) Coolant flow blockage	Mechanical failure of RPS (ATWS) and SLC failure with possible direct fuel damage
	Core Shroud		
64	Parts break off and jam more than MANNF CRDs	No full scram capability	Mechanical failure of RPS (ATWS)
65	Core shroud breaks allowing coolant leakage from inside shroud to annulus, lowering core reflood level after a RLB	Core reflood level cannot be maintained	Diversion of LPCS, HPCI and LPCI
66	Core shroud breaks and displaces, deforming the core, blocking coolant flow, and eliminating the functionality of some significant number of control rods	No full scram capability Coolant flow blockage	Mechanical failure of RPS (ATWS) with possible direct fuel damage
67	Core shroud breaks and displaces, deforming the core, blocking coolant flow, and eliminating the functionality of some significant number of control rods and jet pumps, and lowering core reflood level after a RLB [N/A for BWR/2s]	No full scram capability Coolant flow blockage Core reflood level cannot be maintained	Mechanical failure of RPS (ATWS) with possible direct fuel damage and diversion of LPCI
68	Core shroud breaks, displacing vertically and laterally deforming the core, preventing control rod insertion or withdrawal, eliminating the functionality of feedwater spargers, SLC, core spray (including LPCS and HPCS) and LPCI lines which penetrate the core shroud and blocking coolant flow	No scram or SLC capability Coolant flow blockage No redundant ECC injection inside core shroud (Only ECC delivered inside core shroud is LPCI through recirculation for BWR/3s and 4s in the worst case and even that is not available during RLB and RLB + SSE events)	Mechanical failure of RPS (ATWS) and SLC failure with possible direct fuel damage and failure of LPCS, HPCI (or HPCS) and LPCI

Table 6-4. (continued).

Scenario Number	IGSCC-Induced Internals Single and Cascading Failure Scenarios of Concern	Reason for Selection	Consequences of Failure
69	Core shroud breaks, displacing vertically and laterally, deforming the core, preventing control rod insertion or withdrawal, eliminating the functionality of jet pumps, feedwater spargers, SLC, core spray (including LPCS and HPCS) and LPCI lines which penetrate the core shroud, lowering core reflood level after a RLB and blocking coolant flow [N/A for BWR/2s]	No scram or SLC capability Coolant flow blockage Core reflood level cannot be maintained No redundant ECC injection inside core shroud (No ECC is available in the worst case)	Mechanical failure of RPS (ATWS) and SLC failure with possible direct fuel damage and failure of LPCS, HPCI (or HPCS) and LPCI
	Core Shroud Head		
70	Parts break off and jam more than MANNF CRDs	No full scram capability	Mechanical failure of RPS (ATWS)
71	Core shroud head breaks, displacing vertically and laterally, allowing coolant leakage from inside shroud to annulus, eliminating the functionality of feedwater spargers, core spray (including LPCS and HPCS), and LPCI lines which enter the reactor vessel near the core shroud head elevation	No redundant ECC injection inside core shroud (Only ECC delivered inside core shroud is LPCI through recirculation for BWR/3s and 4s in the worst case and even that is not available during RLB and RLB + SSE events)	Failure of LPCS, HPCI (or HPCS) and LPCI CRD potentially operable
72	Core shroud head breaks, displacing vertically and laterally, allowing coolant leakage from inside shroud to annulus, eliminating the functionality of feedwater spargers, core spray (including LPCS and HPCS), and LPCI lines which enter the reactor vessel near the core shroud head elevation, and deforming the standpipes and steam separators sufficiently to significantly reduce that steam coolant flow path	No redundant ECC injection inside core shroud (Only ECC delivered inside core shroud is LPCI through recirculation for BWR/3s and 4s in the worst case and even that is not available during RLB and RLB + SSE events)	Failure of LPCS, HPCI (or HPCS) and LPCI CRD potentially operable
	Core Shroud Head Bolt		
73	Parts break off and jam more than MANNF CRDs	No full scram capability	Mechanical failure of RPS (ATWS)
74	Common Mode: Some significant number of core shroud head bolts break, displacing core shroud head, allowing coolant leakage from inside shroud to annulus, eliminating the functionality of feedwater spargers, core spray (including LPCS and HPCS), and LPCI lines which enter the reactor vessel near the core shroud head elevation, and deforming the standpipes and steam separators sufficiently to significantly reduce that steam coolant flow path	No redundant ECC injection inside core shroud (Only ECC delivered inside core shroud is LPCI through recirculation for BWR/3s and 4s in the worst case and even that is not available during RLB and RLB + SSE events)	Failure of LPCS, HPCI (or HPCS) and LPCI CRD potentially operable
	Guide Rod		
75	Parts break off and jam more than MANNF CRDs	No full scram capability	Mechanical failure of RPS (ATWS)

Table 6-4. (continued).

Scenario Number	IGSCC-Induced Internals Single and Cascading Failure Scenarios of Concern	Reason for Selection	Consequences of Failure
	Top Guide or Grid		
76	Parts break off and jam more than MANNF CRDs	No full scram capability	Mechanical failure of RPS (ATWS)
77	Top guide breaks, displacing laterally and vertically deforming the fuel assemblies, blocking coolant flow, and eliminating the functionality of some significant number of control rods	No full scram capability Coolant flow blockage	Mechanical failure of RPS (ATWS) and possible isolated direct fuel damage
78	Top guide breaks, displacing laterally and vertically deforming the fuel assemblies, blocking coolant flow, and eliminating the functionality of some significant number of control rods and the functionality of core spray (including LPCS and HPCS) and LPCI lines inside the core shroud	No full scram and SLC is not available in those plants with SLC injection through core spray or HPCS Coolant flow blockage No redundant ECC injection inside core shroud (Only ECC delivered inside core shroud is LPCI through recirculation for BWR/3s and 4s in the worst case and even that is not available during RLB and RLB + SSE events)	Mechanical failure of RPS (ATWS) and failure of LPCS, HPCS, and LPCI with possible isolated direct fuel damage
	Core Spray or LPCS Annulus Pipe		
79	Parts break off and jam more than MANNF CRDs	No full scram capability	Mechanical failure of RPS (ATWS)
80	Core spray line breaks, reducing flow of core spray system inside core shroud by half or eliminating LPCS flow inside core shroud	No redundant ECC injection inside core shroud for BWR/2s, limited redundant ECC injection inside core shroud for BWR/3s and 4s. BWR/5s and 6s have redundant ECC. (Only ECC delivered inside core shroud is core spray at half capacity and BWR/3s and 4s have LPCI through recirculation except during RLB and RLB + SSE events)	Loss of partial LPCS
81	Common Mode: Excluding single LPCS, both core spray lines break, eliminating flow of core spray inside core shroud [N/A for BWR/5s and 6s]	No redundant ECC injection inside core shroud (Only ECC delivered inside core shroud is LPCI through recirculation for BWR/3s and 4s in the worst case and even that is not available during RLB and RLB + SSE events)	Failure of core spray

Table 6-4. (continued).

Scenario Number	IGSCC-Induced Internals Single and Cascading Failure Scenarios of Concern	Reason for Selection	Consequences of Failure
82	Common Mode: Excluding single LPCS, both core spray lines break, eliminating flow of core spray inside core shroud, and eliminating functionality of feedwater spargers [N/A for BWR/5s and 6s]	No redundant ECC injection inside core shroud (Only ECC delivered inside core shroud is LPCI through recirculation for BWR/3s and 4s in the worst case and even that is not available during RLB and RLB + SSE events)	Failure of core spray and HPCI
83	Common Mode: Excluding single LPCS, both core spray lines break, eliminating flow of core spray inside core shroud, eliminating the functionality of jet pumps, and lowering the core reflood level after a RLB [N/A for BWR/2s, 5s and 6s]	Core reflood level cannot be maintained No redundant ECC injection inside core shroud (No ECC is available in the worst case)	Failure of core spray and LPCI
84	Common Mode: Excluding single LPCS, both core spray lines break, eliminating flow of core spray inside core shroud, eliminating the functionality of feedwater spargers and jet pumps, and lowering the core reflood level after a RLB [N/A for BWR/2s, 5s and 6s]	Core reflood level cannot be maintained No redundant ECC injection inside core shroud (No ECC is available in the worst case)	Failure of core spray, HPCI, and LPCI
	Core Spray or LPCS Inside Shroud (Sparger)		
85	Parts break off and jam more than MANNF CRDs	No full scram capability	Mechanical failure of RPS (ATWS)
86	Single core spray [or LPCS sparger] breaks, reducing effectiveness of that ECC core spray pattern, and impacting the other core spray sparger [or HPCS sparger] and eliminating that ECC flow path	No redundant ECC injection inside core shroud for BWR/2s, limited redundant ECC injection inside core shroud for BWR/3s and 4s, and BWR/5s and 6s have redundant ECC (Redundant ECC delivered inside core shroud for BWR/3s and 4s are core spray at half capacity and LPCI through recirculation during all events except RLB and RLB + SSE)	Elimination of LPCS and possibly HPCS
87	Common Mode: Excluding the LPCS sparger, both core spray spargers break, reducing the effectiveness of ECC core spray patterns but ECC still enters inside the core shroud and both core spray spargers impact the top guide, moving or deforming fuel assemblies, damaging more than MANNF control rods, and blocking coolant flow in no more than MANBC pathways	No full scram capability and no SLC capability in MANBC pathways	Mechanical failure of RPS (ATWS) and possible isolated fuel damage
	HPCS Annulus Pipe (BWR/5s and 6s)		
88	Parts break off and jam more than MANNF CRDs	No full scram capability	Mechanical failure of RPS (ATWS)

Table 6-4. (continued).

Scenario Number	IGSCC-Induced Internals Single and Cascading Failure Scenarios of Concern	Reason for Selection	Consequences of Failure
89	HPCS line breaks, eliminating HPCS flow inside core shroud	No SLC capability (on those plants with SLC through HPCS)	Failure of HPCS
	HPCS Inside Shroud (Sparger) (BWR/5s and 6s)		
90	Parts break off and jam more than MANNF CRDs	No full scram capability	Mechanical failure of RPS (ATWS)
91	Common Mode: Both LPCS and HPCS spargers break, reducing effectiveness of both ECC core spray patterns but ECC still enters inside the core shroud and both LPCS and HPCS spargers impact the top guide, moving or deforming fuel assemblies, damaging more than MANNF control rods, and blocking coolant flow in no more than MANBC pathways	No full scram capability and no SLC capability in MANBC pathways	Mechanical failure of RPS (ATWS) with potential isolated direct fuel damage
	LPCI Coupling (BWR/5s and 6s)		
92	Parts break off and jam more than MANNF CRDs	No full scram capability	Mechanical failure of RPS (ATWS)
93	Common Mode: Some significant number of LPCI couplings break, impacting some significant number of jet pumps and eliminating their functionality, allowing coolant leakage into annulus, and lowering the core reflood level after a RLB	Core reflood level cannot be maintained	Failure of LPCI
94	Common Mode: Some significant number of LPCI couplings break, impacting LPCS, eliminating low pressure ECC spray into the core shroud and allowing coolant leakage into annulus	No redundant ECC injection inside core shroud for BWR/5s and 6s (Only ECC delivered inside core shroud is HPCS for BWR/5s and 6s)	Failure of LPCI and LPCS
95	Common Mode: Some significant number of LPCI couplings break, impacting HPCS, eliminating high pressure ECC spray into the core shroud and allowing coolant leakage into annulus	No redundant ECC injection inside core shroud for BWR/5s and 6s (Only ECC delivered inside core shroud is LPCS for BWR/5s and 6s)	Failure of LPCI and HPCS
96	Common Mode: Some significant number of LPCI couplings break, impacting the core shroud head bolts and displacing the core shroud head, allowing coolant leakage from inside shroud to annulus, eliminating the functionality of feedwater spargers, LPCS, and HPCS lines which enter the reactor vessel near the core shroud head elevation, and deforming the standpipes and steam separators sufficiently to significantly reduce that steam coolant flow path	No redundant ECC injection inside core shroud for BWR/5s and 6s (No ECC is available in the worst case)	Failure of LPCS, HPCI (or HPCS) and LPCI
	LPCI Baffle (BWR/5s) or Flow Diverter (BWR/6s)		
97	Parts break off and jam more than MANNF CRDs	No full scram capability	Mechanical failure of RPS (ATWS)

Table 6-4. (continued).

Scenario Number	IGSCC-Induced Internals Single and Cascading Failure Scenarios of Concern	Reason for Selection	Consequences of Failure
98	Single LPCI flow diverter breaks, eliminating in-core instrumentation and flow diverter impacts, moves, and deforms adjacent fuel assemblies, deforms more than MANNF control rods, and blocks coolant flow in no more than MANBC pathways	No full scram capability and no SLC capability in MANBC pathways	Mechanical failure of RPS (ATWS) and possible isolated direct fuel damage
99	Common Mode: Some significant number of LPCI baffles break, eliminating in-core instrumentation and baffles impact top guide, moving or deforming adjacent fuel assemblies, deforming more than MANNF control rods, and blocking coolant flow in no more than MANBC pathways	No full scram capability and no SLC capability in MANBC pathways	Mechanical failure of RPS (ATWS) and possible isolated direct fuel damage
100	Common Mode: Some significant number of LPCI flow diverters break, eliminating in-core instrumentation and flow diverters impact and deform adjacent fuel assemblies, deforming more than MANNF control rods, and blocking coolant flow in more than MANBC pathways [N/A for BWR/2s, 3s, and 4s]	No full scram capability Coolant flow blockage	Mechanical failure of RPS (ATWS) and possible isolated direct fuel damage
	Feedwater Sparger		
101	Parts break off and jam more than MANNF CRDs	No full scram capability	Mechanical failure of RPS (ATWS)
102	Sparger breaks off and impacts some significant number of the jet pumps, reducing their flow functionality, allowing coolant leakage into annulus, and lowering the core reflood level after a RLB [N/A for BWR/2s]	Core reflood level cannot be maintained	Partial flow impact on HPCI and LPCI
103	Common Mode: Some significant number of feedwater spargers break, impacting some significant number of jet pumps and eliminating their functionality, allowing coolant leakage into annulus, and lowering the core reflood level after a RLB [N/A for BWR/2s]	Core reflood level cannot be maintained	Partial flow impact on HPCI and LPCI
104	Common Mode: Some significant number of feedwater spargers break, impacting both core spray lines or LPCS, eliminating low pressure ECC spray into the core shroud and allowing coolant leakage into annulus	No redundant ECC injection inside core shroud for BWR/2s, 3s, & 4s. BWR/5s and 6s have redundant ECC. (Only ECC delivered inside core shroud is LPCI through recirculation for BWR/3s and 4s in the worst case and even that is not available during RLB and RLB + SSE events.)	Flow impact on HPCI and failure of LPCS
105	Common Mode: Some significant number of feedwater spargers break, impacting HPCS, eliminating high pressure ECC spray into the core shroud and allowing coolant leakage into annulus	No SLC capability (On those plants with SLC through HPCS)	Failure of HPCS

Table 6-4. (continued).

Scenario Number	IGSCC-Induced Internals Single and Cascading Failure Scenarios of Concern	Reason for Selection	Consequences of Failure
106	Common Mode: Some significant number of feedwater spargers break, impacting the core shroud head bolts and displacing the core shroud head, allowing coolant leakage from inside shroud to annulus, eliminating the functionality of core spray (including LPCS and HPCS), and LPCI lines which enter the reactor vessel near the core shroud head elevation, and deforming the standpipes and steam separators sufficiently to significantly reduce that steam coolant flow path	No redundant ECC injection inside core shroud (Only ECC delivered inside core shroud is LPCI through recirculation for BWR/3s and 4s in the worst case and even that is not available during RLB and RLB + SSE events)	Failure of LPCS, HPCS, and LPCI
	Jet Pump Inlet Riser		
107	Parts break off and jam more than MANNF CRDs	No full scram capability	Mechanical failure of RPS (ATWS)
108	Jet pump inlet riser breaks, causing failure of that jet pump, rerouting coolant flow and reducing coolant flow efficiency through the core, and lowering the core reflood level after a RLB [N/A for BWR/2s]	Core reflood level cannot be maintained	Partial diversion of LPCI
109	Common Mode: Some significant number of jet pump inlet risers break, eliminating the functionality of some significant number of jet pumps, rerouting coolant flow, and lowering the core reflood level after a RLB [N/A for BWR/2s]	Core reflood level cannot be maintained	Diversion of LPCI
110	Common Mode: Some significant number of jet pump inlet risers break, impacting and eliminating the functionality of the feedwater spargers, core spray (including LPCS and HPCS), and LPCI lines, eliminating the functionality of some significant number of jet pumps, rerouting coolant flow, and lowering the core reflood level after a RLB [N/A for BWR/2s]	Core reflood level cannot be maintained No redundant ECC injection inside core shroud (No ECC is available in the worst case)	Failure of LPCS, HPCS, and LPCI
	Jet Pump Riser Brace and Wedge and Restrainer		
111	Parts break off and jam more than MANNF CRDs	No full scram capability	Mechanical failure of RPS (ATWS)
112	Common Mode: Some significant number of jet pump riser braces and wedges and restrainers break, causing some significant number of inlet risers to break, eliminating the functionality of some significant number of jet pumps, rerouting coolant flow, and lowering the core reflood level after a RLB [N/A for BWR/2s]	Core reflood level cannot be maintained	Diversion of LPCI

Table 6-4. (continued).

Scenario Number	IGSCC-Induced Internals Single and Cascading Failure Scenarios of Concern	Reason for Selection	Consequences of Failure
113	Common Mode: Some significant number of jet pump riser braces and wedges and restrainers break, causing some significant number of inlet risers to break, impacting and eliminating the functionality of the feedwater spargers, core spray (including LPCS and HPCS), and LPCI lines, eliminating functionality of some significant number of jet pumps, rerouting coolant flow, and lowering the core reflood level after a RLB [N/A for BWR/2s]	Core reflood level cannot be maintained No redundant ECC injection inside core shroud (No ECC is available in the worst case)	Failure of LPCS, HPCI (or HPCS) and LPCI
	Jet Pump Hold-Down Beam		
114	Parts break off and jam more than MANNF CRDs	No full scram capability	Mechanical failure of RPS (ATWS)
115	Jet pump hold-down beam breaks, causing failure of that jet pump, rerouting coolant flow and reducing coolant flow efficiency through the core, permitting the entire "ram's head" to displace, eliminating the functionality of core spray (including LPCS and HPCS) lines located in the annulus, and lowering the core reflood level after a RLB [N/A for BWR/2s]	Core reflood level cannot be maintained No redundant ECC injection inside core shroud for BWR/3s and 4s while BWR/5s and 6s have redundant ECC (Only ECC delivered inside core shroud is LPCI through recirculation for BWR/3s and 4s in the worst case and even that is not available during RLB and RLB + SSE events; LPCI (with three independent lines) is only ECC fully functional for BWR/5s and 6s)	Failure of LPCS and HPCS
116	Common Mode: Some significant number of jet pump hold-down beams break, causing the associated "ram's heads" to break, eliminating the functionality of some significant number of jet pumps, rerouting coolant flow, and lowering the core reflood level after a RLB [N/A for BWR/2s]	Core reflood level cannot be maintained	Diversion of LPCI
117	Common Mode: Some significant number of jet pump hold-down beams break, causing the associated "ram's heads" to break, impacting and eliminating the functionality of the feedwater spargers, core spray (including LPCS and HPCS), and LPCI lines, eliminating the functionality of some significant number of jet pumps, and rerouting coolant flow, and lowering the core reflood level after a RLB [N/A for BWR/2s]	Core reflood level cannot be maintained No redundant ECC injection inside core shroud (No ECC is available in the worst case)	Failure of LPCS, HPCI (or HPCS) and LPCI
	Jet Pump Transition Piece		
118	Parts break off and jam more than MANNF CRDs	No full scram capability	Mechanical failure of RPS (ATWS)

Table 6-4. (continued).

Scenario Number	IGSCC-Induced Internals Single and Cascading Failure Scenarios of Concern	Reason for Selection	Consequences of Failure
119	Common Mode: Some significant number of jet pump transition pieces break, causing the associated "ram's heads" to break, eliminating the functionality of some significant number of jet pumps, rerouting coolant flow, and lowering the core reflood level after a RLB [N/A for BWR/2s]	Core reflood level cannot be maintained	Diversion of LPCI
120	Common Mode: Some significant number of jet pump transition pieces break, causing the associated "ram's heads" to break, impacting and eliminating the functionality of the feedwater spargers, core spray (including LPCS and HPCS), and LPCI lines, eliminating the functionality of some significant number of jet pumps, rerouting coolant flow, and lowering the core reflood level after a RLB [N/A for BWR/2s]	Core reflood level cannot be maintained No redundant ECC injection inside core shroud (No ECC is available in the worst case)	Failure of LPCS, HPCI (or HPCS) and LPCI
	Jet Pump Inlet Elbow		
121	Parts break off and jam more than MANNF CRDs	No full scram capability	Mechanical failure of RPS (ATWS)
	Jet Pump Nozzle		
122	Parts break off and jam more than MANNF CRDs	No full scram capability	Mechanical failure of RPS (ATWS)
123	Jet pump nozzle breaks, causing failure of that jet pump, rerouting coolant flow and reducing coolant flow efficiency through the core, and loose parts jam more than MANNF CRDs	No full scram capability	Mechanical failure of RPS (ATWS)
124	Jet pump nozzle breaks, causing failure of that jet pump, rerouting coolant flow, reducing coolant flow efficiency through the core, and loose parts jam more than MANNF CRDs and block coolant flow in no more than MANBC pathways	No full scram capability and no SLC capability in MANBC pathways	Mechanical failure of RPS (ATWS) and possible isolated direct fuel damage
125	Common Mode: Some significant number of jet pump nozzles break, causing failure of some significant number of jet pumps, rerouting coolant flow, reducing coolant flow efficiency through the core, and loose parts jam more than MANNF CRDs and block coolant flow in no more than MANBC pathways	No full scram capability and no SLC capability in MANBC pathways	Mechanical failure of RPS (ATWS) and possible isolated direct fuel damage with possible diversion of LPCI
	Jet Pump Inlet Mixer or Throat		
126	Parts break off and jam more than MANNF CRDs	No full scram capability	Mechanical failure of RPS (ATWS)
127	Jet pump inlet mixer or throat breaks, causing failure of that jet pump, rerouting coolant flow and reducing coolant flow efficiency through the core, and lowering the core reflood level after a RLB [N/A for BWR/2s]	Core reflood level cannot be maintained	Possible diversion of LPCI

Table 6-4. (continued).

Scenario Number	IGSCC-Induced Internals Single and Cascading Failure Scenarios of Concern	Reason for Selection	Consequences of Failure
128	Common Mode: Some significant number of jet pump inlet mixers or throats break, eliminating the functionality of some significant number of jet pumps, rerouting coolant flow, reducing coolant flow efficiency through the core, and lowering the core reflood level after a RLB [N/A for BWR/2s]	Core reflood level cannot be maintained	Possible diversion of LPCI
129	Common Mode: Some significant number of jet pump inlet mixers or throats break, causing failure of some significant number of jet pumps, impacting and eliminating the functionality of the feedwater spargers, core spray (including LPCS and HPCS), and LPCI lines, rerouting coolant flow, reducing coolant flow efficiency through the core, and lowering the core reflood level after a RLB [N/A for BWR/2s]	Core reflood level cannot be maintained No redundant ECC injection inside core shroud (No ECC is available in the worst case)	Failure of LPCS, HPCI (or HPCS) and LPCI
	Jet Pump Diffuser and Adapter		
130	Parts break off and jam more than MANNF CRDs	No full scram capability	Mechanical failure of RPS (ATWS)
131	Jet pump diffuser and/or adapter breaks, causing failure of that jet pump, rerouting coolant flow and reducing coolant flow efficiency through the core, and lowering the core reflood level after a RLB [N/A for BWR/2s]	Core reflood level cannot be maintained	Possible diversion of LPCI
132	Common Mode: Some significant number of jet pump diffusers and/or adapters break, eliminating the functionality of some significant number of jet pumps, rerouting coolant flow, reducing coolant flow efficiency through the core, and lowering the core reflood level after a RLB [N/A for BWR/2s]	Core reflood level cannot be maintained	Diversion of LPCI
133	Common Mode: Some significant number of jet pump diffusers and/or adapters break, causing failure of some significant number of jet pumps, impacting and eliminating the functionality of the feedwater spargers, core spray (including LPCS and HPCS), and LPCI lines, rerouting coolant flow, reducing coolant flow efficiency through the core, and lowering the core reflood level after a RLB [N/A for BWR/2s]	Core reflood level cannot be maintained No redundant ECC injection inside core shroud (No ECC is available in the worst case)	Failure of LPCS, HPCI (or HPCS) and LPCI
	Jet Pump Sensing Line		
134	Parts break off and jam more than MANNF CRDs	No full scram capability	Mechanical failure of RPS (ATWS)
	Standpipe		
135	Parts break off and jam more than MANNF CRDs	No full scram capability	Mechanical failure of RPS (ATWS)

Table 6-4. (continued).

Scenario Number	IGSCC-Induced Internals Single and Cascading Failure Scenarios of Concern	Reason for Selection	Consequences of Failure
136	Single standpipe breaks, allowing leakage of the steam coolant into the water filled area above the core shroud head and eliminating the functionality of LPCS or one of the core spray lines	No redundant ECC injection inside core shroud for BWR/2s, limited redundant ECC injection inside core shroud for BWR/3s and 4s, and BWR/5s and 6s have redundant ECC (Redundant ECC delivered inside core shroud for BWR/3s and 4s are core spray at half capacity and LPCI through recirculation during all events except RLB and RLB + SSE)	Failure of LPCS
137	Single standpipe breaks, allowing leakage of the steam coolant into the water filled area above the core shroud head and eliminating the functionality of HPCS	No SLC capability (On those plants with SLC through HPCS)	Failure of HPCS
138	Common Mode: Some significant number of standpipes break, allowing leakage of the steam coolant into the water filled area above the core shroud head and eliminating the functionality of the feedwater spargers, core spray (including LPCS and HPCS) and LPCI lines located in the annulus	No redundant ECC injection inside core shroud (Only LPCI through recirculation for BWR/3s and 4s is available in the worst case and even that is not available during RLB and RLB + SSE events)	Failure of LPCS, HPCI (or HPCS) and LPCI
	Steam Separator		
139	Parts break off and jam more than MANNF CRDs	No full scram capability	Mechanical failure of RPS (ATWS)
140	Single steam separator breaks, allowing leakage of the steam coolant into the water filled area above the core shroud head and eliminating the functionality of the LPCS or one of the core spray lines	No redundant ECC injection inside core shroud for BWR/2s, limited redundant ECC injection inside core shroud for BWR/3s and 4s, and BWR/5s and 6s have redundant ECC (Redundant ECC delivered inside core shroud for BWR/3s and 4s are core spray at half capacity and LPCI through recirculation during all events except RLB and RLB + SSE)	Failure of LPCS
141	Single steam separator breaks, allowing leakage of the steam coolant into the water filled area above the core shroud head and eliminating the functionality of the HPCS	No SLC capability (On those plants with SLC through HPCS)	Failure of HPCS

Table 6-4. (continued).

Scenario Number	IGSCC-Induced Internals Single and Cascading Failure Scenarios of Concern	Reason for Selection	Consequences of Failure
142	Common Mode: Some significant number of steam separators break, allowing leakage of the steam coolant into the water filled area above the core shroud head and eliminating the functionality of the feedwater spargers, core spray (including LPCS and HPCS) and LPCI lines located in the annulus	No redundant ECC injection inside core shroud (Only LPCI through recirculation for BWR/3s and 4s is available in the worst case and even that is not available during RLB and RLB + SSE events)	Failure of LPCS, HPCI (or HPCS) and LPCI
	Steam Dryer Assembly		
143	Parts break off and jam more than MANNF CRDs	No full scram capability	Mechanical failure of RPS (ATWS)
144	Steam dryer assembly breaks, displacing vertically and laterally and deforming the dryers, separators, and standpipes to completely eliminate the steam flow path	Coolant flow blockage	Diversion of LPCS, HPCI and LPCI
	Head Spray		
145	Parts break off and jam more than MANNF CRDs	No full scram capability	Mechanical failure of RPS (ATWS)
	Surveillance Specimen Holder		
146	Parts break off and jam more than MANNF CRDs	No full scram capability	Mechanical failure of RPS (ATWS)
147	Single surveillance holder breaks and impacts an access hole cover, allowing coolant leakage from lower plenum to annulus and lowering core reflood level after a RLB to the recirculation outlet elevation	Core reflood level cannot be maintained	Some diversion of LPCS, HPCI and LPCI
148	Common Mode: Some significant number of surveillance holders break and impact all access hole covers, allowing coolant leakage from lower plenum to annulus and lowering core reflood level after a RLB to the recirculation outlet elevation	Core reflood level cannot be maintained	Diversion of LPCS, HPCI and LPCI

Table Notes:

MANNF - Maximum allowable number of control rods/control rod drives that can be inoperable per safety regulations before reactor scram is not achievable with most reactive fuel loading possible.

MANBC - Maximum allowable number of completely blocked coolant pathways before fuel damage is anticipated.

LPCS - Low pressure core spray (sometimes including core spray on BWR/2s, 3s, and 4s and LPCS on BWR/5s and 6s).

ATWS - Anticipated transient without scram.

RPS - Reactor protection system.

LOCA - Loss-of-coolant accident.

Coolant flow blockage may also cause SLC to be ineffective.

6.5 Potential BWR Design Vulnerabilities Based on Cursory Review of Final Scenarios

Scanning through Table 6-4, a certain number of potential BWR design vulnerabilities can be identified. These include:

Of the eight initiating events, the RLB potentially creates more safety concerns than any other event, due to the difficulty of maintaining the two-thirds core reflood capability and the loss of LPCI in BWR/3s and 4s.

The BWR/2s, 3s, and 4s typically do not have multiply redundant ECC injection inside the core shroud beyond that provided by core spray (two independent lines). This reduces the number of ECC options available to the plant operator when various accident situations arise. BWR/5s and 6s have a single HPCS, a single LPCS, and three independent LPCI lines.

The BWR/2s do not have a low-pressure ECC flood capability which reduces the ECC options for accident mitigation.

These vulnerabilities are based strictly on a cursory review of Table 6-4. However, it does highlight the fact that the later BWR designs (5s and 6s) have been improved in certain safety design aspects. A more in-depth risk evaluation of the final scenarios identified in Table 6-4 is described in the next report section.

7. PRELIMINARY RISK ASSESSMENT

A qualitative risk assessment was carried out for all failure scenarios in Table 6-4 to develop a list of potential concerns. Areas for additional analysis were identified.

7.1 Potential Concerns

The 148 failure scenarios in Table 6-4 were evaluated to qualitatively estimate the rank (high, medium, or low) of each with respect to their anticipated effect on the increase in core damage frequency (CDF). Proper operator response for any mitigation efforts was assumed. For most of the scenarios, a BWR/4 plant NUREG-1150 PRA was used to assist in providing an estimate for the ranking. The results are listed in Table 7-1. The numbering of the sequences is the same as in Table 6-4. In most cases, a high risk ranking was made.

The risk rankings were based on one or two major systems failing. A risk matrix showing the failed systems that result in a high risk rating is shown in Table 7-2. The numbers were taken from the same BWR/4 plant NUREG-1150 PRA. As an example of how to read the chart, using the first row under the headings for failures of the reactor protection system (RPS), the risk of a significant increase in CDF caused by only RPS failure is 0.2 events/yr, while the increase in risk from failure of both the RPS and the SLC systems is 3 events/yr. That is, if the RPS were failed and the frequencies of the internal and external events are considered, a resulting 0.2 events/yr increase in CDF would occur. The shaded cells in the table indicate failed systems (or combinations of systems) that result in a high risk rating.

Most of the scenarios in Table 7-1 are ranked high; therefore, it appears that there are a large number of scenarios that could be considered for further investigation. However, there is a great deal of overall redundancy in that the high-ranked scenarios fall into variations of two basic categories: (a) loss of the RPS (e.g., ATWS) or (b) loss of coolant to the core.

The high-ranked scenarios were broken into subcategories to further differentiate between the various causes of loss of the RPS and the various ways that coolant to the core could be lost. The following seven subcategories were chosen:

1. Loss of scram capability (ATWS)
2. SLC nonfunctional
3. Both RPS and SLC nonfunctional
4. Medium LOCA with SLC nonfunctional
5. Both HPCI and LPCI ineffective (no redundant ECCS)
6. Core reflood to two-thirds level cannot be maintained (treated as a loss of ECCS)
7. HPCS and SLC (through sparger) nonfunctional (several BWR/5 and BWR/6 plants).

Each of the high-ranked scenarios in Table 7-1 can be placed into one or more of these subcategories.

Table 7-1. BWR IGSCC-induced internals impact of CDF rankings.

Scenario Number	IGSCC-Induced Internals Single and Cascading Failure Scenarios of Concern	Consequences of Failure	Impact on Core Damage Frequency
	In-Core Instrument Housings		
1	Parts break off and jam more than MANNF CRDs	Mechanical failure of RPS (ATWS)	High
2	One housing breaks, loss of RPV pressure boundary and associated instrumentation results, and loose parts jam more than MANNF CRDs	Mechanical failure of RPS (ATWS) and small break LOCA	High
3	One housing breaks, loss of RPV pressure boundary and associated instrumentation results, and loose parts jam more than MANNF CRDs and block coolant flow in no more than MANBC pathways	Mechanical failure of RPS (ATWS) and small break LOCA with possible reduced SLC capability and possible isolated direct fuel damage	High
4	Common Mode: Some significant number of in-core instrument housings break with loss of RPV pressure boundary significantly challenging coolant makeup capabilities and potentially lowering core reflood levels, loss of associated instrumentation results, and loose parts jam more than MANNF CRDs and block coolant flow in no more than MANBC pathways	Mechanical failure of RPS (ATWS) and LOCA with possible SLC failure and possible isolated direct fuel damage	High
	In-Core Instrument Guide Tube		
5	Parts break off and jam more than MANNF CRDs	Mechanical failure of RPS (ATWS)	High
6	One guide tube breaks, loss of associated instrumentation results, and loose parts jam more than MANNF CRDs	Mechanical failure of RPS (ATWS)	High
7	One guide tube breaks, loss of associated instrumentation results, and loose parts jam more than MANNF CRDs and block coolant flow in no more than MANBC pathways	Mechanical failure of RPS (ATWS) and possible isolated direct fuel damage	High
8	Common Mode: Some significant number of guide tubes break, loss of associated instrumentation results, and loose parts jam more than MANNF CRDs and block coolant flow in no more than MANBC pathways	Mechanical failure of RPS (ATWS) and possible isolated direct fuel damage	High
	IRM / SRM / LPRM Tube		
9	Parts break off and jam more than MANNF CRDs	Mechanical failure of RPS (ATWS)	High
10	One tube breaks, loss of RPV pressure boundary and associated instrumentation results, and loose parts jam more than MANNF CRDs	Mechanical failure of RPS (ATWS) and small break LOCA	High
11	One tube breaks, loss of RPV pressure boundary and associated instrumentation results, and loose parts jam more than MANNF CRDs and block coolant flow in no more than MANBC pathways	Mechanical failure of RPS (ATWS) and small break LOCA with possible reduced SLC capability and possible isolated direct fuel damage	High

Table 7-1. (continued).

Scenario Number	IGSCC-Induced Internals Single and Cascading Failure Scenarios of Concern	Consequences of Failure	Impact on Core Damage Frequency
12	Common Mode: Some significant number of tubes break with loss of RPV pressure boundary challenging coolant makeup capabilities, loss of associated instrumentation results, and loose parts jam more than MANNF CRDs and block coolant flow in no more than MANBC pathways	Mechanical failure of RPS (ATWS) and LOCA with possible SLC failure and possible isolated direct fuel damage	High
	Core dP Line		
13	Parts break off and jam more than MANNF CRDs	Mechanical failure of RPS (ATWS)	High
14	Core dP line breaks, doesn't measure dP correctly and eliminates functionality of SLC line	SLC failure	Low
15	Core dP line breaks and eliminates functionality of SLC line, doesn't measure dP correctly, and parts jam more than MANNF CRDs	Mechanical failure of RPS (ATWS) and SLC failure	High
16	Core dP line breaks and eliminates functionality of SLC line, doesn't measure dP correctly, and parts block coolant flow in no more than MANBC pathways	SLC failure and possible isolated direct fuel damage	Low
17	Core dP line breaks and eliminates functionality of SLC line, doesn't measure dP correctly, parts jam more than MANNF CRDs, and parts block coolant flow in no more than MANBC pathways	Mechanical failure of RPS (ATWS) and SLC failure with possible isolated direct fuel damage	High
	SLC Line		
18	Parts break off and jam more than MANNF CRDs	Mechanical failure of RPS (ATWS)	High
19	SLC line breaks, cannot inject SLC, and eliminates functionality of core dP line	SLC failure	Low
20	SLC line breaks, cannot inject SLC, eliminates functionality of core dP line, and parts jam more than MANNF CRDs	Mechanical failure of RPS (ATWS) and SLC failure	High
21	SLC line breaks, cannot inject SLC, eliminates functionality of core dP line and parts block coolant flow in no more than MANBC pathways	SLC failure and possible isolated direct fuel damage	Low
22	SLC line breaks, cannot inject SLC, eliminates functionality of core dP line, parts jam more than MANNF CRDs, and parts block coolant flow in no more than MANBC pathways	Mechanical failure of RPS (ATWS) and SLC failure with possible isolated direct fuel damage	High
	CRD Blade		
23	Parts break off and jam more than MANNF CRDs	Mechanical failure of RPS (ATWS)	High
24	One control rod blade deforms, jams that CRD and blocks coolant flow and other parts break off and jam more than MANNF other CRDs	Mechanical failure of RPS (ATWS)	High
25	One control rod blade deforms, jams that CRD and blocks coolant flow, other parts break off and jam more than MANNF other CRDs, and other parts block coolant flow in no more than MANBC total pathways	Mechanical failure of RPS (ATWS) and possible isolated direct fuel damage	High

Table 7-1. (continued).

Scenario Number	IGSCC-Induced Internals Single and Cascading Failure Scenarios of Concern	Consequences of Failure	Impact on Core Damage Frequency
26	Common Mode: Some significant number of control rod blades deform and their insertion or withdrawal is eliminated, and coolant flow is blocked in more than MANBC pathways	Mechanical failure of RPS (ATWS) and possible isolated direct fuel damage	High
	CRD Housing		
27	Parts break off and jam more than MANNF CRDs	Mechanical failure of RPS (ATWS)	High
28	One housing breaks and does not support fuel support piece and fuel assembly, loss of RPV pressure boundary and single CRD insertion or withdrawal results, and loose parts jam more than MANNF other CRDs	Mechanical failure of RPS (ATWS) and small break LOCA	High
29	One housing breaks and does not support fuel support piece and fuel assembly, loss of RPV pressure boundary results, single control rod drops, and loose parts jam more than MANNF other CRDs	Mechanical failure of RPS (ATWS) and small break LOCA	High
30	One housing breaks and does not support fuel support piece and fuel assembly, loss of RPV pressure boundary and single control rod insertion or withdrawal results, and loose parts jam more than MANNF other CRDs and block coolant flow in no more than MANBC pathways	Mechanical failure of RPS (ATWS) and small break LOCA with possible isolated direct fuel damage and possible reduced SLC capability	High
31	One housing breaks and does not support fuel support piece and fuel assembly, loss of RPV pressure boundary results, single control rod drops, and loose parts jam more than MANNF other CRDs and block coolant flow in no more than MANBC pathways	Mechanical failure of RPS (ATWS) and small break LOCA with possible isolated direct fuel damage and possible reduced SLC capability	High
32	Common Mode: Some significant number of CRD housings break with loss of RPV pressure boundary significantly challenging coolant makeup capabilities and potentially lowering core reflood levels, fuel support pieces and fuel assemblies are not properly supported, more than MANNF control rods drop and/or the loss of functionality of more than MANNF CRDs result and coolant flow is blocked in no more than MANBC pathways	Mechanical failure of RPS (ATWS) and LOCA with possible isolated direct fuel damage and possible SLC failure	High
	CRD Guide Tube		
33	Parts break off and jam more than MANNF CRDs	Mechanical failure of RPS (ATWS)	High
34	One guide tube breaks and does not support fuel support piece and fuel assembly, loss of single control rod insertion or withdrawal results, and loose parts jam more than MANNF other CRDs	Mechanical failure of RPS (ATWS)	High

Table 7-1. (continued).

Scenario Number	IGSCC-Induced Internals Single and Cascading Failure Scenarios of Concern	Consequences of Failure	Impact on Core Damage Frequency
35	One guide tube breaks and does not support fuel support piece and fuel assembly, loss of single control rod insertion or withdrawal results, and loose parts jam more than MANNF other CRDs and block coolant flow in no more than MANBC pathways	Mechanical failure of RPS (ATWS) and possible isolated direct fuel damage	High
36	Common Mode: Some significant number of guide tubes break and do not support fuel support pieces and fuel assemblies, loss of the functionality of more than MANNF CRDs result, and coolant flow is blocked in no more than MANBC pathways	Mechanical failure of RPS (ATWS) and possible isolated direct fuel damage	High
	CRD Stub Tube		
37	Parts break off and jam more than MANNF CRDs	Mechanical failure of RPS (ATWS)	High
38	One CRD stub tube breaks and does not support fuel support piece and fuel assembly, loss of RPV pressure boundary and single control rod insertion or withdrawal results, and loose parts jam more than MANNF other CRDs	Mechanical failure of RPS (ATWS) and small break LOCA	High
39	One CRD stub tube breaks and does not support fuel support piece and fuel assembly, loss of RPV pressure boundary results, single control rod drops, and loose parts jam more than MANNF other CRDs	Mechanical failure of RPS (ATWS) and small break LOCA	High
40	One CRD stub tube breaks and does not support fuel support piece and fuel assembly, loss of RPV pressure boundary and single control rod insertion or withdrawal results, and loose parts jam more than MANNF other CRDs and block coolant flow in no more than MANBC pathways	Mechanical failure of RPS (ATWS) and small break LOCA with possible isolated direct fuel damage and possible reduced SLC capability	High
41	One CRD stub tube breaks and does not support fuel support piece and fuel assembly, loss of RPV pressure boundary results, single control rod drops, and loose parts jam more than MANNF other CRDs and block coolant flow in no more than MANBC pathways	Mechanical failure of RPS (ATWS) and small break LOCA with possible isolated direct fuel damage and possible reduced SLC capability	High
42	Common Mode: Some significant number of CRD stub tubes break with loss of RPV pressure boundary significantly challenging coolant makeup capabilities and potentially lowering core reflood levels, fuel support pieces and fuel assemblies are not properly supported, more than MANNF control rods drop and/or the loss of functionality of more than MANNF CRDs result, and loose parts block coolant flow in no more than MANBC pathways	Mechanical failure of RPS (ATWS) and LOCA with possible isolated direct fuel damage and possible SLC failure	High
	CRD Index Tube and Spud		
43	Parts break off and jam more than MANNF CRDs	Mechanical failure of RPS (ATWS)	High

Table 7-1. (continued).

Scenario Number	IGSCC-Induced Internals Single and Cascading Failure Scenarios of Concern	Consequences of Failure	Impact on Core Damage Frequency
44	One CRD index tube or spud breaks, single control rod cannot insert or withdraw, and loose parts jam more than MANNF other CRDs	Mechanical failure of RPS (ATWS)	High
45	One CRD index tube or spud breaks, single control rod drops, and loose parts jam more than MANNF other CRDs	Mechanical failure of RPS (ATWS)	High
46	One CRD index tube or spud breaks, single control rod cannot insert or withdraw, and loose parts jam more than MANNF other CRDs and block coolant flow in no more than MANBC pathways	Mechanical failure of RPS (ATWS) and possible isolated direct fuel damage	High
47	One CRD index tube or spud breaks, single control rod drops, and loose parts jam more than MANNF other CRDs and block coolant flow in no more than MANBC pathways	Mechanical failure of RPS (ATWS) and possible isolated direct fuel damage	High
48	Common Mode: Some significant number of CRD index tubes or spuds break, more than MANNF control rods drop and/or the loss of functionality results, and loose parts block coolant flow in no more than MANBC pathways	Mechanical failure of RPS (ATWS) and possible isolated direct fuel damage	High
	CRD Thermal Sleeve		
49	Parts break off and jam more than MANNF CRDs	Mechanical failure of RPS (ATWS)	High
50	One thermal sleeve breaks and guide tube does not support fuel support piece and fuel assembly, single control rod cannot insert or withdraw, and loose parts jam more than MANNF other CRDs	Mechanical failure of RPS (ATWS)	High
51	One thermal sleeve breaks and guide tube does not support fuel support piece and fuel assembly, single control rod cannot insert or withdraw, and loose parts jam more than MANNF other CRDs and block coolant flow in no more than MANBC pathways	Mechanical failure of RPS (ATWS) and possible isolated direct fuel damage	High
52	Common Mode: Some significant number of thermal sleeves break and guide tubes do not support fuel support pieces and fuel assemblies, more than MANNF control rods cannot insert or withdraw, and loose parts block coolant flow in no more than MANBC pathways	Mechanical failure of RPS (ATWS) and possible isolated direct fuel damage	High
	Fuel Support		
53	Parts break off and jam more than MANNF CRDs	Mechanical failure of RPS (ATWS)	High
54	Common Mode: Some significant number of fuel supports break displacing the fuel assemblies, some significant number of control rods cannot insert or withdraw, and coolant flow is blocked around fuel assemblies	Mechanical failure of RPS (ATWS) and possible direct fuel damage	High

Table 7-1. (continued).

Scenario Number	IGSCC-Induced Internals Single and Cascading Failure Scenarios of Concern	Consequences of Failure	Impact on Core Damage Frequency
	Core Shroud Support		
55	Parts break off and jam more than MANNF CRDs	Mechanical failure of RPS (ATWS)	High
56	Core shroud support breaks, allowing coolant leakage to flow from lower plenum to annulus and lowering core reflood level after a RLB	Diversion of HPCI and LPCI (CRD potentially operable)	High
57	Core shroud support breaks, displacing the core shroud, core plate, nuclear core, top guide, core shroud head, steam separators, steam dryers, and other internals attached to the core shroud support or core shroud, blocking coolant flow, eliminating the functionality of some significant number of control rods, jet pumps, feedwater spargers, SLC, core spray (including LPCS and HPCS) and LPCI lines which penetrate the core shroud and lowering the core reflood level after a RLB	Mechanical failure of RPS (ATWS) with SLC failure and failure of LPCS, HPCI (or HPCS) and LPCI	High
	Access Hole Cover		
58	Parts break off and jam more than MANNF CRDs	Mechanical failure of RPS (ATWS)	High
59	Access hole cover breaks and allows coolant leakage from lower plenum to annulus, lowering core reflood level after a RLB [N/A for BWR/2s]	Diversion of LPCS, HPCI and LPCI	Medium
60	Common Mode: All access hole covers break and allow coolant leakage from lower plenum to annulus, and lowering core reflood level after a RLB [N/A for BWR/2s]	Diversion of LPCS, HPCI and LPCI	Medium
	Core Plate		
61	Parts break off and jam more than MANNF CRDs	Mechanical failure of RPS (ATWS)	High
62	Core plate breaks and tilts or partially displaces the nuclear core, eliminating the functionality of some significant number of control rods and creating coolant flow blockage	Mechanical failure of RPS (ATWS) with possible direct fuel damage	High
63	Core plate breaks off from core shroud support ledge, displacing the nuclear core, creating coolant flow blockage, and eliminating the functionality of SLC and some significant number of control rods	Mechanical failure of RPS (ATWS) and SLC failure with possible direct fuel damage	High
	Core Shroud		
64	Parts break off and jam more than MANNF CRDs	Mechanical failure of RPS (ATWS)	High
65	Core shroud breaks allowing coolant leakage from inside shroud to annulus, lowering core reflood level after a RLB	Diversion of LPCS, HPCI and LPCI	Medium

Table 7-1. (continued).

Scenario Number	IGSCC-Induced Internals Single and Cascading Failure Scenarios of Concern	Consequences of Failure	Impact on Core Damage Frequency
66	Core shroud breaks and displaces, deforming the core, blocking coolant flow, and eliminating the functionality of some significant number of control rods	Mechanical failure of RPS (ATWS) with possible direct fuel damage	High
67	Core shroud breaks and displaces, deforming the core, blocking coolant flow, and eliminating the functionality of some significant number of control rods and jet pumps, and lowering core reflood level after a RLB [N/A for BWR/2s]	Mechanical failure of RPS (ATWS) with possible direct fuel damage and diversion of LPCI	High
68	Core shroud breaks, displacing vertically and laterally deforming the core, preventing control rod insertion or withdrawal, eliminating the functionality of feedwater spargers, SLC, core spray (including LPCS and HPCS) and LPCI lines which penetrate the core shroud and blocking coolant flow	Mechanical failure of RPS (ATWS) and SLC failure with possible direct fuel damage and failure of LPCS, HPCI (or HPCS) and LPCI	High
69	Core shroud breaks, displacing vertically and laterally, deforming the core, preventing control rod insertion or withdrawal, eliminating the functionality of jet pumps, feedwater spargers, SLC, core spray (including LPCS and HPCS) and LPCI lines which penetrate the core shroud, lowering core reflood level after a RLB and blocking coolant flow [N/A for BWR/2s]	Mechanical failure of RPS (ATWS) and SLC failure with possible direct fuel damage and failure of LPCS, HPCI (or HPCS) and LPCI	High
	Core Shroud Head		
70	Parts break off and jam more than MANNF CRDs	Mechanical failure of RPS (ATWS)	High
71	Core shroud head breaks, displacing vertically and laterally, allowing coolant leakage from inside shroud to annulus, eliminating the functionality of feedwater spargers, core spray (including LPCS and HPCS), and LPCI lines which enter the reactor vessel near the core shroud head elevation	Failure of LPCS, HPCI (or HPCS) and LPCI CRD potentially operable	High
72	Core shroud head breaks, displacing vertically and laterally, allowing coolant leakage from inside shroud to annulus, eliminating the functionality of feedwater spargers, core spray (including LPCS and HPCS), and LPCI lines which enter the reactor vessel near the core shroud head elevation, and deforming the standpipes and steam separators sufficiently to significantly reduce that steam coolant flow path	Failure of LPCS, HPCI (or HPCS) and LPCI CRD potentially operable	High
	Core Shroud Head Bolt		
73	Parts break off and jam more than MANNF CRDs	Mechanical failure of RPS (ATWS)	High

Table 7-1. (continued).

Scenario Number	IGSCC-Induced Internals Single and Cascading Failure Scenarios of Concern	Consequences of Failure	Impact on Core Damage Frequency
74	Common Mode: Some significant number of core shroud head bolts break, displacing core shroud head, allowing coolant leakage from inside shroud to annulus, eliminating the functionality of feedwater spargers, core spray (including LPCS and HPCS), and LPCI lines which enter the reactor vessel near the core shroud head elevation, and deforming the standpipes and steam separators sufficiently to significantly reduce that steam coolant flow path	Failure of LPCS, HPCI (or HPCS) and LPCI CRD potentially operable	High
	Guide Rod		
75	Parts break off and jam more than MANNF CRDs	Mechanical failure of RPS (ATWS)	High
	Top Guide or Grid		
76	Parts break off and jam more than MANNF CRDs	Mechanical failure of RPS (ATWS)	High
77	Top guide breaks, displacing laterally and vertically deforming the fuel assemblies, blocking coolant flow, and eliminating the functionality of some significant number of control rods	Mechanical failure of RPS (ATWS) and possible isolated direct fuel damage	High
78	Top guide breaks, displacing laterally and vertically deforming the fuel assemblies, blocking coolant flow, and eliminating the functionality of some significant number of control rods and the functionality of core spray (including LPCS and HPCS) and LPCI lines inside the core shroud	Mechanical failure of RPS (ATWS) and failure of LPCS, HPCS, and LPCI with possible isolated direct fuel damage	High
	Core Spray or LPCS Annulus Pipe		
79	Parts break off and jam more than MANNF CRDs	Mechanical failure of RPS (ATWS)	High
80	Core spray line breaks, reducing flow of core spray system inside core shroud by half or eliminating LPCS flow inside core shroud	Loss of partial LPCS	Low
81	Common Mode: Excluding single LPCS, both core spray lines break, eliminating flow of core spray inside core shroud [N/A for BWR/5s and 6s]	Failure of core spray	Low
82	Common Mode: Excluding single LPCS, both core spray lines break, eliminating flow of core spray inside core shroud, and eliminating functionality of feedwater spargers [N/A for BWR/5s and 6s]	Failure of core spray and HPCI	Low
83	Common Mode: Excluding single LPCS, both core spray lines break, eliminating flow of core spray inside core shroud, eliminating the functionality of jet pumps, and lowering the core reflood level after a RLB [N/A for BWR/2s, 5s and 6s]	Failure of core spray and LPCI	Low

Table 7-1. (continued).

Scenario Number	IGSCC-Induced Internals Single and Cascading Failure Scenarios of Concern	Consequences of Failure	Impact on Core Damage Frequency
84	Common Mode: Excluding single LPCS, both core spray lines break, eliminating flow of core spray inside core shroud, eliminating the functionality of feedwater spargers and jet pumps, and lowering the core reflood level after a RLB [N/A for BWR/2s, 5s and 6s]	Failure of core spray, HPCI, and LPCI	Low
	Core Spray or LPCS Inside Shroud (Sparger)		
85	Parts break off and jam more than MANNF CRDs	Mechanical failure of RPS (ATWS)	High
86	Single core spray [or LPCS sparger] breaks, reducing effectiveness of that ECC core spray pattern, and impacting the other core spray sparger [or HPCS sparger] and eliminating that ECC flow path	Elimination of LPCS and possibly HPCS	Medium
87	Common Mode: Excluding the LPCS sparger, both core spray spargers break, reducing the effectiveness of ECC core spray patterns but ECC still enters inside the core shroud and both core spray spargers impact the top guide, moving or deforming fuel assemblies, damaging more than MANNF control rods, and blocking coolant flow in no more than MANBC pathways	Mechanical failure of RPS (ATWS) and possible isolated fuel damage	High
	HPCS Annulus Pipe (BWR/5s and 6s)		
88	Parts break off and jam more than MANNF CRDs	Mechanical failure of RPS (ATWS)	High
89	HPCS line breaks, eliminating HPCS flow inside core shroud	Failure of HPCS	Low
	HPCS Inside Shroud (Sparger) (BWR/5s and 6s)		
90	Parts break off and jam more than MANNF CRDs	Mechanical failure of RPS (ATWS)	High
91	Common Mode: Both LPCS and HPCS spargers break, reducing effectiveness of both ECC core spray patterns but ECC still enters inside the core shroud and both LPCS and HPCS spargers impact the top guide, moving or deforming fuel assemblies, damaging more than MANNF control rods, and blocking coolant flow in no more than MANBC pathways	Mechanical failure of RPS (ATWS) with potential isolated direct fuel damage	High
	LPCI Coupling (BWR/5s and 6s)		
92	Parts break off and jam more than MANNF CRDs	Mechanical failure of RPS (ATWS)	High
93	Common Mode: Some significant number of LPCI couplings break, impacting some significant number of jet pumps and eliminating their functionality, allowing coolant leakage into annulus, and lowering the core reflood level after a RLB	Failure of LPCI	Low

Table 7-1. (continued).

Scenario Number	IGSCC-Induced Internals Single and Cascading Failure Scenarios of Concern	Consequences of Failure	Impact on Core Damage Frequency
94	Common Mode: Some significant number of LPCI couplings break, impacting LPCS, eliminating low pressure ECC spray into the core shroud and allowing coolant leakage into annulus	Failure of LPCI and LPCS	Low
95	Common Mode: Some significant number of LPCI couplings break, impacting HPCS, eliminating high pressure ECC spray into the core shroud and allowing coolant leakage into annulus	Failure of LPCI and HPCS	Medium
96	Common Mode: Some significant number of LPCI couplings break, impacting the core shroud head bolts and displacing the core shroud head, allowing coolant leakage from inside shroud to annulus, eliminating the functionality of feedwater spargers, LPCS, and HPCS lines which enter the reactor vessel near the core shroud head elevation, and deforming the standpipes and steam separators sufficiently to significantly reduce that steam coolant flow path	Failure of LPCS, HPCI (or HPCS) and LPCI	High
	LPCI Baffle (BWR/5s) or Flow Diverter (BWR/6s)		
97	Parts break off and jam more than MANNF CRDs	Mechanical failure of RPS (ATWS)	High
98	Single LPCI flow diverter breaks, eliminating in-core instrumentation and flow diverter impacts, moves, and deforms adjacent fuel assemblies, deforms more than MANNF control rods, and blocks coolant flow in no more than MANBC pathways	Mechanical failure of RPS (ATWS) and possible isolated direct fuel damage	High
99	Common Mode: Some significant number of LPCI baffles break, eliminating in-core instrumentation and baffles impact top guide, moving or deforming adjacent fuel assemblies, deforming more than MANNF control rods, and blocking coolant flow in no more than MANBC pathways	Mechanical failure of RPS (ATWS) and possible isolated direct fuel damage	High
100	Common Mode: Some significant number of LPCI flow diverters break, eliminating in-core instrumentation and flow diverters impact and deform adjacent fuel assemblies, deforming more than MANNF control rods, and blocking coolant flow in more than MANBC pathways [N/A for BWR/2s, 3s, and 4s]	Mechanical failure of RPS (ATWS) and possible isolated direct fuel damage	High
	Feedwater Sparger		
101	Parts break off and jam more than MANNF CRDs	Mechanical failure of RPS (ATWS)	High
102	Sparger breaks off and impacts some significant number of the jet pumps, reducing their flow functionality, allowing coolant leakage into annulus, and lowering the core reflood level after a RLB [N/A for BWR/2s]	Partial flow impact on HPCI and LPCI	Medium

Table 7-1. (continued).

Scenario Number	IGSCC-Induced Internals Single and Cascading Failure Scenarios of Concern	Consequences of Failure	Impact on Core Damage Frequency
103	Common Mode: Some significant number of feedwater spargers break, impacting some significant number of jet pumps and eliminating their functionality, allowing coolant leakage into annulus, and lowering the core reflood level after a RLB [N/A for BWR/2s]	Partial flow impact on HPCI and LPCI	Medium
104	Common Mode: Some significant number of feedwater spargers break, impacting both core spray lines or LPCS, eliminating low pressure ECC spray into the core shroud and allowing coolant leakage into annulus	Flow impact on HPCI and failure of LPCS	Low
105	Common Mode: Some significant number of feedwater spargers break, impacting HPCS, eliminating high pressure ECC spray into the core shroud and allowing coolant leakage into annulus	Failure of HPCS	Low
106	Common Mode: Some significant number of feedwater spargers break, impacting the core shroud head bolts and displacing the core shroud head, allowing coolant leakage from inside shroud to annulus, eliminating the functionality of core spray (including LPCS and HPCS), and LPCI lines which enter the reactor vessel near the core shroud head elevation, and deforming the standpipes and steam separators sufficiently to significantly reduce that steam coolant flow path	Failure of LPCS, HPCS, and LPCI	Medium
	Jet Pump Inlet Riser		
107	Parts break off and jam more than MANNF CRDs	Mechanical failure of RPS (ATWS)	High
108	Jet pump inlet riser breaks, causing failure of that jet pump, rerouting coolant flow and reducing coolant flow efficiency through the core, and lowering the core reflood level after a RLB [N/A for BWR/2s]	Partial diversion of LPCI	Medium
109	Common Mode: Some significant number of jet pump inlet risers break, eliminating the functionality of some significant number of jet pumps, rerouting coolant flow, and lowering the core reflood level after a RLB [N/A for BWR/2s]	Diversion of LPCI	Medium
110	Common Mode: Some significant number of jet pump inlet risers break, impacting and eliminating the functionality of the feedwater spargers, core spray (including LPCS and HPCS), and LPCI lines, eliminating the functionality of some significant number of jet pumps, rerouting coolant flow, and lowering the core reflood level after a RLB [N/A for BWR/2s]	Failure of LPCS, HPCS, and LPCI	Medium
	Jet Pump Riser Brace and Wedge and Restrainer		
111	Parts break off and jam more than MANNF CRDs	Mechanical failure of RPS (ATWS)	High

Table 7-1. (continued).

Scenario Number	IGSCC-Induced Internals Single and Cascading Failure Scenarios of Concern	Consequences of Failure	Impact on Core Damage Frequency
112	Common Mode: Some significant number of jet pump riser braces and wedges and restrainers break, causing some significant number of inlet risers to break, eliminating the functionality of some significant number of jet pumps, rerouting coolant flow, and lowering the core reflood level after a RLB [N/A for BWR/2s]	Diversion of LPCI	Medium
113	Common Mode: Some significant number of jet pump riser braces and wedges and restrainers break, causing some significant number of inlet risers to break, impacting and eliminating the functionality of the feedwater spargers, core spray (including LPCS and HPCS), and LPCI lines, eliminating functionality of some significant number of jet pumps, rerouting coolant flow, and lowering the core reflood level after a RLB [N/A for BWR/2s]	Failure of LPCS, HPCI (or HPCS) and LPCI	Medium
	Jet Pump Hold-Down Beam		
114	Parts break off and jam more than MANNF CRDs	Mechanical failure of RPS (ATWS)	High
115	Jet pump hold-down beam breaks, causing failure of that jet pump, rerouting coolant flow and reducing coolant flow efficiency through the core, permitting the entire "ram's head" to displace, eliminating the functionality of core spray (including LPCS and HPCS) lines located in the annulus, and lowering the core reflood level after a RLB [N/A for BWR/2s]	Failure of LPCS and HPCS	Low
116	Common Mode: Some significant number of jet pump hold-down beams break, causing the associated "ram's heads" to break, eliminating the functionality of some significant number of jet pumps, rerouting coolant flow, and lowering the core reflood level after a RLB [N/A for BWR/2s]	Diversion of LPCI	Medium
117	Common Mode: Some significant number of jet pump hold-down beams break, causing the associated "ram's heads" to break, impacting and eliminating the functionality of the feedwater spargers, core spray (including LPCS and HPCS), and LPCI lines, eliminating the functionality of some significant number of jet pumps, and rerouting coolant flow, and lowering the core reflood level after a RLB [N/A for BWR/2s]	Failure of LPCS, HPCI (or HPCS) and LPCI	Medium
	Jet Pump Transition Piece		
118	Parts break off and jam more than MANNF CRDs	Mechanical failure of RPS (ATWS)	High

Table 7-1. (continued).

Scenario Number	IGSCC-Induced Internals Single and Cascading Failure Scenarios of Concern	Consequences of Failure	Impact on Core Damage Frequency
119	Common Mode: Some significant number of jet pump transition pieces break, causing the associated "ram's heads" to break, eliminating the functionality of some significant number of jet pumps, rerouting coolant flow, and lowering the core reflood level after a RLB [N/A for BWR/2s]	Diversion of LPCI	Medium
120	Common Mode: Some significant number of jet pump transition pieces break, causing the associated "ram's heads" to break, impacting and eliminating the functionality of the feedwater spargers, core spray (including LPCS and HPCS), and LPCI lines, eliminating the functionality of some significant number of jet pumps, rerouting coolant flow, and lowering the core reflood level after a RLB [N/A for BWR/2s]	Failure of LPCS, HPCI (or HPCS) and LPCI	Medium
	Jet Pump Inlet Elbow		
121	Parts break off and jam more than MANNF CRDs	Mechanical failure of RPS (ATWS)	High
	Jet Pump Nozzle		
122	Parts break off and jam more than MANNF CRDs	Mechanical failure of RPS (ATWS)	High
123	Jet pump nozzle breaks, causing failure of that jet pump, rerouting coolant flow and reducing coolant flow efficiency through the core, and loose parts jam more than MANNF CRDs	Mechanical failure of RPS (ATWS)	High
124	Jet pump nozzle breaks, causing failure of that jet pump, rerouting coolant flow, reducing coolant flow efficiency through the core, and loose parts jam more than MANNF CRDs and block coolant flow in no more than MANBC pathways	Mechanical failure of RPS (ATWS) and possible isolated direct fuel damage	High
125	Common Mode: Some significant number of jet pump nozzles break, causing failure of some significant number of jet pumps, rerouting coolant flow, reducing coolant flow efficiency through the core, and loose parts jam more than MANNF CRDs and block coolant flow in no more than MANBC pathways	Mechanical failure of RPS (ATWS) and possible isolated direct fuel damage with possible diversion of LPCI	High
	Jet Pump Inlet Mixer or Throat		
126	Parts break off and jam more than MANNF CRDs	Mechanical failure of RPS (ATWS)	High
127	Jet pump inlet mixer or throat breaks, causing failure of that jet pump, rerouting coolant flow and reducing coolant flow efficiency through the core, and lowering the core reflood level after a RLB [N/A for BWR/2s]	Possible diversion of LPCI	Medium

Table 7-1. (continued).

Scenario Number	IGSCC-Induced Internals Single and Cascading Failure Scenarios of Concern	Consequences of Failure	Impact on Core Damage Frequency
128	Common Mode: Some significant number of jet pump inlet mixers or throats break, eliminating the functionality of some significant number of jet pumps, rerouting coolant flow, reducing coolant flow efficiency through the core, and lowering the core reflood level after a RLB [N/A for BWR/2s]	Possible diversion of LPCI	Medium
129	Common Mode: Some significant number of jet pump inlet mixers or throats break, causing failure of some significant number of jet pumps, impacting and eliminating the functionality of the feedwater spargers, core spray (including LPCS and HPCS), and LPCI lines, rerouting coolant flow, reducing coolant flow efficiency through the core, and lowering the core reflood level after a RLB [N/A for BWR/2s]	Failure of LPCS, HPCI (or HPCS) and LPCI	Medium
	Jet Pump Diffuser and Adapter		
130	Parts break off and jam more than MANNF CRDs	Mechanical failure of RPS (ATWS)	High
131	Jet pump diffuser and/or adapter breaks, causing failure of that jet pump, rerouting coolant flow and reducing coolant flow efficiency through the core, and lowering the core reflood level after a RLB [N/A for BWR/2s]	Possible diversion of LPCI	Medium
132	Common Mode: Some significant number of jet pump diffusers and/or adapters break, eliminating the functionality of some significant number of jet pumps, rerouting coolant flow, reducing coolant flow efficiency through the core, and lowering the core reflood level after a RLB [N/A for BWR/2s]	Diversion of LPCI	Medium
133	Common Mode: Some significant number of jet pump diffusers and/or adapters break, causing failure of some significant number of jet pumps, impacting and eliminating the functionality of the feedwater spargers, core spray (including LPCS and HPCS), and LPCI lines, rerouting coolant flow, reducing coolant flow efficiency through the core, and lowering the core reflood level after a RLB [N/A for BWR/2s]	Failure of LPCS, HPCI (or HPCS) and LPCI	Medium
	Jet Pump Sensing Line		
134	Parts break off and jam more than MANNF CRDs	Mechanical failure of RPS (ATWS)	High
	Standpipe		
135	Parts break off and jam more than MANNF CRDs	Mechanical failure of RPS (ATWS)	High

Table 7-1. (continued).

Scenario Number	IGSCC-Induced Internals Single and Cascading Failure Scenarios of Concern	Consequences of Failure	Impact on Core Damage Frequency
136	Single standpipe breaks, allowing leakage of the steam coolant into the water filled area above the core shroud head and eliminating the functionality of LPCS or one of the core spray lines	Failure of LPCS	Low
137	Single standpipe breaks, allowing leakage of the steam coolant into the water filled area above the core shroud head and eliminating the functionality of HPCS	Failure of HPCS	Low
138	Common Mode: Some significant number of standpipes break, allowing leakage of the steam coolant into the water filled area above the core shroud head and eliminating the functionality of the feedwater spargers, core spray (including LPCS and HPCS) and LPCI lines located in the annulus	Failure of LPCS, HPCI (or HPCS) and LPCI	Medium
	Steam Separator		
139	Parts break off and jam more than MANNF CRDs	Mechanical failure of RPS (ATWS)	High
140	Single steam separator breaks, allowing leakage of the steam coolant into the water filled area above the core shroud head and eliminating the functionality of the LPCS or one of the core spray lines	Failure of LPCS	Low
141	Single steam separator breaks, allowing leakage of the steam coolant into the water filled area above the core shroud head and eliminating the functionality of the HPCS	Failure of HPCS	Low
142	Common Mode: Some significant number of steam separators break, allowing leakage of the steam coolant into the water filled area above the core shroud head and eliminating the functionality of the feedwater spargers, core spray (including LPCS and HPCS) and LPCI lines located in the annulus	Failure of LPCS, HPCI (or HPCS) and LPCI	Medium
	Steam Dryer Assembly		
143	Parts break off and jam more than MANNF CRDs	Mechanical failure of RPS (ATWS)	High
144	Steam dryer assembly breaks, displacing vertically and laterally and deforming the dryers, separators, and standpipes to completely eliminate the steam flow path	Diversion of LPCS, HPCI and LPCI	Medium
	Head Spray		
145	Parts break off and jam more than MANNF CRDs	Mechanical failure of RPS (ATWS)	High
	Surveillance Specimen Holder		
146	Parts break off and jam more than MANNF CRDs	Mechanical failure of RPS (ATWS)	High

Table 7-1. (continued).

Scenario Number	IGSCC-Induced Internals Single and Cascading Failure Scenarios of Concern	Consequences of Failure	Impact on Core Damage Frequency
147	Single surveillance holder breaks and impacts an access hole cover, allowing coolant leakage from lower plenum to annulus and lowering core reflood level after a RLB to the recirculation outlet elevation	Some diversion of LPCS, HPCI and LPCI	Medium
148	Common Mode: Some significant number of surveillance holders break and impact all access hole covers, allowing coolant leakage from lower plenum to annulus and lowering core reflood level after a RLB to the recirculation outlet elevation	Diversion of LPCS, HPCI and LPCI	Medium

Table Notes:

MANNF - Maximum allowable number of control rods/control rod drives that can be inoperable per safety regulations before reactor scram is not achievable with most reactive fuel loading possible.

MANBC - Maximum allowable number of completely blocked coolant pathways before fuel damage is anticipated.

LPCS - Low pressure core spray (sometimes including core spray on BWR/2s, 3s, and 4s and LPCS on BWR/5s and 6s).

ATWS - Anticipated transient without scram.

RPS - Reactor protection system.

LOCA - Loss-of-coolant accident.

Coolant flow blockage may also cause SLC to be ineffective.

Table 7-2. Risk matrix using values from Peach Bottom NUREG-1150 PRA.

System	RPS	HPCI	SLC	LPCI	LPCS
RPS	2E-1/yr		3/yr		
HPCI		2E-5/yr		8E-2/yr	
SLC	3/yr		4E-5/yr		
LPCI		8E-2/yr		3E-5/yr	3E-4/yr
LPCS				3E-4/yr	1E-5/yr

7.2 Areas for Additional Analysis

Each of the seven subcategories identified in the previous section was evaluated to determine which might be the most promising candidates for further study. The direct cause of the sequence initiation is not identified in the following discussions, but might be a seismic event or a line break event which causes a sudden loading to the internals that results in the failure of one or more internals components.

Loss of scram capability (ATWS) This sequence could be initiated by a loose part from a number of components jamming the path of the control rods so that a number of rods could not be inserted, but SLC could still be delivered to the fuel through the partially blocked channel. This differentiates the sequence from the third subcategory. To block a number of channels, the failure would probably be common mode. The more likely scenario would be loose parts from the upper region of the internals dropping into the core. This type of scenario could be evaluated by an overall loose-parts analysis for reactor internals. Such an evaluation has already been made by General Electric, so additional analyses are not recommended.

SLC nonfunctional The most direct cause of this scenario would be damage to the SLC line itself. For internals with lower core SLC injection, this might result from IGSCC damage to the SLC or core dP lines. For internals with upper core SLC injection, IGSCC damage to the HPCS line could initiate the scenario. Although the SLC is nonfunctional, the rod control system is not disabled, so additional analyses are not recommended.

Both RPS and SLC nonfunctional This scenario could be considered similar to subcategory 1, where common mode failure of a number of components not only interferes with control rod insertion, but blocks channels such that SLC cannot be delivered through the channels to the fuel as well. A second initiator for this scenario could be as a result of lateral shifting of one of the degraded major internals, such as the core plate in sequence 63 of Table 7-1, which not only interferes with rod insertion, but also crimps the SLC line in plants with lower core SLC injection. Lateral shifts from failure of core shroud welds or core shroud supports also could result in this scenario. These sequences are ranked high and IGSCC of core shroud welds have been observed; therefore, additional analyses for these types of sequences are recommended.

Medium LOCA with loss of SLC Common mode failure of a number of in-core instrument housings or CRDM housings could cause this scenario. The LOCA at the reactor vessel bottom drains SLC from the core. As long at the rods can be inserted and ECCS supplied, additional analyses are not recommended.

Both HPCI and LPCI ineffective (no redundant ECCS) This scenario could develop from sequences 71 or 72 in Table 7-1, which are failures of the shroud head, or sequence 74, common mode failure of shroud head bolts. These sequences are ranked high, and IGSCC of multiple shroud head bolts have been observed; consequently, additional analyses for these sequences are recommended.

Core reflood to two-thirds level cannot be maintained (treated as a loss of ECCS) This scenario could occur from sequences such as failure of an access hole cover, sequences 59 or 60 which are ranked medium, or failure of a jet pump holddown beam, sequences 166 or 117, which are ranked medium. Since IGSCC degradation of these components has been detected, and jet pump beams have failed, additional analyses for these sequences are recommended. Jet pump sequences are not applicable to BWR/2 plants.

HPCS and SLC (through sparger) eliminated (several BWR/5 and BWR/6 plants) This sequence is applicable to BWR/5 and BWR/6 plants only. Sequence 89 applies to this scenario. The consequence ranking is low, so additional analyses are not recommended.

8. REDUCTION OF SCENARIOS

In Chapter 6, 148 failure scenarios (Table 6-4) were identified without regard to probability of occurrence or risk. Subsequently, these were evaluated to qualitatively estimate the rank (high, medium, or low) of each with respect to their anticipated effect on the increase in core damage frequency (CDF). In most cases, 101 out of 148, a high risk ranking was made (Table 7-1).

These were too many to cost-effectively evaluate in detail, considering that a number of highly unlikely sequences are included. Qualitatively, three high-ranked-scenarios areas were identified in which additional analyses are needed: both RPS and SLC nonfunctional, both HPCI and LPCI ineffective (no redundant ECCS), and core reflood to two-thirds level cannot be maintained (treated as a loss of ECCS).

To narrow the scope of the investigation so that the effort would be more manageable, the evaluation was concentrated on a single BWR plant, and an initial investigation was conducted on a single component. In addition, a number of assumptions were made which could be used to rank some of the scenarios as low. These are described in section 8.1.

Supporting analyses and evaluations were conducted to estimate the risk of the remaining components, as described in section 8.2, and the remaining components were evaluated with respect to risk in section 8.3.

8.1 Plan to Narrow Scope

There are many difficulties in carrying out this program, such as:

(a) the large number of components and failure sequences

(b) the different types of BWRs

(c) the difficulty in estimating crack sizes and growth rates

(d) the number of disciplines involved

(e) limited "good" PRA and thermal-hydraulic models available

(f) no failure data to assist in estimating probabilities available for many of the variables

Consequently, it was decided to narrow the research scope to provide a simplified, cost-effective approach. The following simplifications were used:

(a) select a single plant for study

(b) select a single component and probable failure locations for initial calculations

(c) perform minimal, scoping calculations

(d) use expert panels to critique methods and offer suggestions for approach

8.1.1 Plant Selection

A number of criteria were used to select a plant for study, including:

(a) is there an existing PRA model for the plant (internal and external events)

(b) is there an existing TRAC-B thermal-hydraulics model for the plant (or one for a similar plant)

(c) is the plant typical

(d) older plants were preferred

A BWR/4 was chosen for study. As a high-power BWR/4, it is the most representative type of BWR. There was a fairly good (but not ideal) PRA of the plant, and there existed a BWR/4 TRAC-B thermal-hydraulics model which could be modified to represent the selected plant.

8.1.2 Initial Component Selection

A number of criteria were used to select a specific reactor internals component for study, including:

(a) degradation to date

(b) cascading possibilities

(c) safety significance

(d) typicality

The jet pump was the reactor internals component selected for study, as there has been recently discovered cracking in jet pump riser inlet welds and jet pump failure could lead to a variety of cascading failure sequences. Riser elbow cracking was first discovered at an overseas plant in 1996 and in the U.S. in 1997 (USNRC, 1997a); since then similar cracking has been detected at jet pump riser elbows on several other domestic BWRs. IGSCC failures have also initiated at the jet pump holddown beams, the first instance occurring in a BWR/3 in 1980. Cracking also was found in the beams of two BWR/6 plants. Subsequently, the beams have been redesigned. There are a number of nearby components that might be impacted by an unrestrained jet pump, so there are several potentials for cascading failures. The qualitative analysis in the first phase of the program identified 27 sequences that might initiate from failure of one of the several jet pump components. The jet pump design is typical from plant to plant with the most common design having 20 (10 pairs) of jet pumps; however, some plants have 16 or 24. The BWR/2 design does not have jet pumps.

8.1.3 Extent of Calculations

The BWRVIP group has conducted numerous analyses and evaluations of BWR internals. These have included analyses of degraded components for continued service, safety significance analyses, loose parts evaluations, inservice inspection guidelines, repair methods and guidelines, and a PRA analysis. These analyses and evaluations have been reviewed by the NRC staff. Since it did not seem prudent to duplicate the BWRVIP efforts, the approach was taken to perform a few confirmatory assessments of the BWRVIP evaluations, which primarily have assessed single component failures, and concentrate the analysis on multiple component failures. These calculations are discussed in Chapter 9.

8.1.4 Expert Panels

Three panels were convened to guide the study. The first was an NRC panel consisting of various disciplines of the Office of Nuclear Reactor Regulation and the Office of Nuclear Regulatory Research. This panel offered advice and guidance on the overall proposed project, on the membership of the technical panels, on the plant selection, and on the initial component to be studied.

Two technical panels were used to guide the study. The first was a materials panel that studied the available crack growth data and recommended best estimate crack growth rates for the BWR internals environment. Professors Gary S. Was of the University of Michigan and Roger W. Staehle of the University of Minnesota served on the panel. A summary report of their submittal to the project is contained in Appendix B. The second was a structural PRA panel that reviewed and offered advice on the methods of approach. Drs. Robert P. Kennedy of RPK Structural Mechanical Consulting, Inc., and Robert Budnitz of Future Resources Associates, Inc., served on the panel. Dr. Kennedy's letter reports offering suggestions on upgrading the NUREG-1150 Seismic Risk Assessment and estimating seismic input levels are contained in Appendices C and D.

8.1.5 Screening Criterion

Guidance for developing a screening criterion was obtained from the Regulatory Guide (RG) 1.174 (NRC, 1998), "An Approach for Using Probabilistic Risk Assessment in Risk-Informed Decisions on Plant-Specific Changes to the Licensing Basis." Although the title indicates that the document deals with proposed changes to plant licensing bases, the guidelines also apply to the evaluation of safety issues. RG 1.174 outlines a four-element approach to integrated decision-making. (For the BWR internals issue, integrated decision-making refers to the evaluation of the potential safety significance of IGSCC.) The four-element approach is the following:

1. Define the Proposed Change (or the potential safety issue)

   Evaluate effects on the plant's licensing basis
   Identify systems, structures, and components (SSCs) affected
   Identify available models and information

2. Perform Engineering Analysis

   Evaluate effects with respect to:

   a. Current regulations
   b. Defense in depth
   c. Safety margins
   d. Increase in risk

3. Define Implementation and Monitoring Program

4. Submit Proposed Change

The first portion was dealt with in Chapters 1 through 7, which summarized the IGSCC issue with regard to BWRs, characterized the general design similarities of BWR internals, and identified potential IGSCC-induced internals failure scenarios. In Table 7-1, 148 potentially significant failure scenarios were identified.

A portion of the second element listed above, covering the evaluation of IGSCC with respect to potential increases in risk for BWRs will be evaluated in this chapter. The other three evaluation criteria: current regulations, defense in depth, and safety margins, will not be covered. Therefore, these efforts help to determine the safety significance of IGSCC for BWR internals only with respect to potential risk increases.

The NRC's Safety Goal for the operation of nuclear power plants is a CDF not exceeding 1×10^{-4}/yr (NRC, 1997d). RG 1.174 provides acceptance guidelines with respect to potential risk increases. For plants with a CDF less than 1E-4/yr, proposed changes to the current licensing basis that result in increases in CDF of less than 1E-6/y are acceptable with respect to the increase in risk criterion. Changes that result in increases in CDF of 1E-5/yr to 1E-6/yr may be acceptable, depending upon factors such as the baseline CDF, the quality of the analysis, and the cumulative impact of previously accepted changes.

The total CDF of a plant can be broken down into three separate contributions: CDF from internal events and internal flooding (reported in the IPE for the plant), CDF from external events (evaluated in the IPEEE), and CDF from low power and shutdown events (not typically available for most plants). The CDF acceptance guidelines outlined above are meant to apply to the total CDF of a plant. The report *Individual Plant Examination Program: Perspectives on Reactor Safety and Plant Performance* (NUREG-1560, NRC, 1997c) summarizes the CDFs for BWRs from internal events and internal flooding. The 33 plants generally had CDFs ranging from 1E-4/yr to 1E-6/yr, with two outlier plants quoting CDFs of approximately 1E-7/yr. An approximate geometric average CDF for these plants is 1E-5/yr from internal events and internal flooding.

The CDF from external events was estimated from a review of selected IPEEE submittals as documented in two review papers presented at PSA'96. For internal fire, 24 IPEEEs (PWRs and BWRs) presented CDFs with a geometric average of 9.4E-6/yr. For seismic events, 14 IPEEEs (PWRs and BWRs) presented CDFs with a geometric average of 7.1E-6/yr.

Finally, the CDF from low power and shutdown operation was estimated from the shutdown studies for Grand Gulf (NUREG/CR-6143, Whitehead, 1995) and Surry (NUREG/CR-6144, Chu and Pratt, 1995). The Surry study indicated a CDF from low power and shutdown operations that was approximately 15% of the total from full-power operations (internal and external events). The Grand Gulf study indicated a CDF that was approximately 50% of the total from full-power operations (internal events only). Applying either of these percentages to representative BWR CDF results derived previously results in a CDF of approximately 4E-6/yr from low-power and shutdown operations.

Summing the individual CDF contributions for a representative BWR results in the following:

Full-Power Operations	
CDF (internal events and internal flooding)	1E-5/yr
CDF (internal fire)	1E-5/yr
CDF (seismic)	7E-6/yr
Low-Power and Shutdown Operations	
CDF (all contributions)	4E-6/yr
Total CDF	3.1E-5/yr

This total CDF was rounded up to 5E-5/yr for use in the BWR internals study. It should be noted that for individual plants, the total CDF could range from greater than 1E-4/yr to less than 1E-6/yr.

Given a representative BWR total CDF of 5E-5/yr, the acceptance guidelines in RG 1.174 allow CDF increases below 1E-6 and may allow CDF increases between 1E-5/yr and 1E-6/yr. For the purposes of this study, an increase in CDF of 5E-6/yr or more is the criterion for determining whether IGSCC of BWR internals is a potentially significant safety issue, with respect to increase in risk. This change in CDF criterion represents 10% of the BWR representative total CDF of 5E-5/yr. (The three other evaluation criteria – current regulations, defense in depth, and safety margin – are not within the scope of this project.)

To apply this screening criterion, the IGSCC of BWR internals should be considered in an integrated manner with regard to potential safety significance. This implies that the potential changes in CDF from each of the 148 IGSCC scenarios identified need to be considered (added together) in order to evaluate whether IGSCC of BWR internals is a potentially significant safety issue. Dividing the 5E-6/yr or more increase in CDF criterion by the 148 IGSCC scenarios results in 3E-8/yr for a lower limit for individual IGSCC scenarios. However, because not all of the screened scenarios will have frequencies at or near 3E-8/yr, a screening threshold of 1E-7/yr is used.

8.1.6 PRA Selection and Modification

For licensee submittals to the U.S. Nuclear Regulatory Commission (NRC) concerning proposed changes to the current licensing basis, RG 1.174 (NRC, 1998) provides a list of expectations:

1. Safety impacts are evaluated in an integrated manner
2. Acceptability is evaluated in an integrated fashion to ensure that all principles are met
3. CDF and/or large early release frequency (LERF) are suitable metrics for risk-informed regulatory decisions
4. Increases in CDF/LERF are limited to small increments
5. Scope and quality of analyses are appropriate for the purpose
6. Uncertainty is considered appropriately
7. Supporting PRA is subject to quality controls
8. Data, methods, and assumptions are scrutable.

These expectations are also applicable to the analyses for this project. Integrated safety impacts of IGSCC of BWR internals are evaluated by identifying all potentially significant IGSCC scenarios (performed in Phase I). The acceptability of IGSCC, or alternatively the safety significance of IGSCC, is determined by evaluating (with the appropriate use of screening thresholds) each of the IGSCC scenarios with respect to changes in CDF. As allowed, CDF is used as the risk metric. The proposed change in CDF criterion of 5E-6/yr or more for safety significance of IGSCC is a small increment (10%) of the representative BWR total CDF of 5E-5/yr.

Three sets of PRA models are available for the selected BWR/4: the NUREG-1150 models, the Individual Plant Examination (IPE) and Individual Plant Examination for External Events (IPEEE)

models, and the Accident Sequence Precursor (ASP) model. The NUREG-1150 PRA models for internal and external events at full power were generated in the late 1980s as part of an NRC-sponsored program to consistently analyze five different nuclear power plants. Generally, the NUREG-1150 studies included limited plant-specific data collection, and the external events analyses were performed with a streamlined and somewhat simplified methodology. In contrast, the IPE (for full-power internal events and internal flooding) was performed in the early 1990s and included more recent plant-specific data and design information. However, the IPEEE, performed in the mid-1990s, utilized screening and seismic margins approaches that did not result in models capable of predicting CDFs from external events. Finally, the ASP model for the BWR/4 is a simplified model compared with the NUREG-1150 and IPE models. The ASP model covers only full-power internal events and is considered to be too simplified to be of much use in this study.

Unfortunately, none of the PRA studies are ideal choices to support the evaluation of IGSCC of BWR internals. The NUREG-1150 studies address the plant design as it existed in the late 1980s and contain very little plant-specific data, and the external events analyses suffer from various deficiencies. In contrast, the IPE/IPEEE studies reflect the plant design as it existed in the early 1990s, but again contain limited plant-specific data. Also, the IPEEE studies did not use methodologies that result in CDF predictions. In general, the ASP model is too simplified for the purposes of this study and does not include external events. Finally, all three types of studies did not address the CDF from low power and shutdown operations.

From past studies of IGSCC of BWR internals, it was expected that initiating events such as RLBs and seismic events will be important. Therefore, it was important that the PRA chosen for use in this project be accurate with respect to RLBs and seismic events. Because the IPEEE did not use a methodology that could predict a seismic CDF, the IPE/IPEEE set of models is not appropriate for this project. Therefore, the NUREG-1150 set of PRA models were used. However, in order to update these models, several changes were made. The changes are outlined below.

Changes to the NUREG-1150 models involved three general areas: addition/modification of event trees (internal events only), incorporation of newer IPE and other data for selected basic events and initiating events, and use of a newer seismic hazard curve. In order to model IGSCC events in detail, the single large LOCA event tree in the NUREG-1150 internal events model was replaced with three large LOCA event trees: RLB, main steam line break, and feedwater line break. Also, an event tree was added to model randomly occurring jet pump failures.

Data changes to the NUREG-1150 model were identified by comparing the NUREG-1150 basic event data with corresponding data from the IPE. If significant differences were identified, then the IPE data were used. This process resulted in the use of IPE data for test and maintenance outages, emergency diesel generator failures to start, turbine-driven pump failures to start, and selected actuation circuitry failures. In addition, the RPS failure probabilities were updated using *Reliability Study: General Electric Reactor Protection System, 1984 – 1995* (NUREG/CR-5500, Vol. 3, Eide et al., 1999).

Finally, the 1988 LLNL seismic hazard curve used in the NUREG-1150 study was judged to be out of date. Therefore, the newer 1993 LLNL seismic hazard curve was used. However, in order to use the newer hazard curve, location response factors had to be modified to account for differences in the ground response spectra between the 1988 and 1993 LLNL seismic hazard curves. That effort is documented in the letter report *Suggested Upgrading of NUREG-1150 Seismic Risk Assessment of [ ] For Use in Intergranular Stress Corrosion Cracking Risk Assessment* (Kennedy, 1998a, prepared for this project, Appendix C).

8.2 Initial Reduction of Scenarios

In order to reduce the number of scenarios in Table 7-1 to a more manageable number, several steps were taken to identify scenarios or groups of scenarios that can be readily eliminated based on initial research assumptions. Sections 8.2.1 through 8.2.6 list the steps taken to eliminate scenarios. The results are summarized in Table 8-1. The first column in the table lists the scenario number from Table 7-1. The next seven columns list the steps in Sections 8.2.1 through 8.2.6. If the event is screened, an "x" is placed in the column and the row is shaded. This reduced the list from 148 to 49 for additional evaluation.

8.2.1 Non-BWR/4 Scenarios

Scenarios 88 through 100, 138, and 142 involve only BWR/5s and BWR/6 designs and thus can be eliminated from the BWR/4 plant evaluation.

8.2.2 Low Risk From PRA

Scenarios 14, 16, 19, 21, 80, 81, 82, 83, 84, 104, 105, 115, 136, 137, 140, and 141 were ranked "low" in the PRA study in Table 7-1.

8.2.3 BWR Control Rod Failure-to-Insert Criterion

BWRs generally have 130 to 185 control rods. These control rods can fail to insert randomly across the core (resulting in a random pattern of non-insertion), or some sort of localized phenomenon might result in a group of adjacent control rods failing to insert. The reports *Anticipated Transients Without Scram for Light Water Reactors* (NUREG-0460, Vol. 2, NRC, 1978) and *Technical Specification Improvement Analyses for BWR Reactor Protection System* (NEDC-30851P, a proprietary General Electric report) both address the random pattern of non-insertion. Both reports indicate that approximately one-third of the control rods can fail to insert in a random pattern, and the reactor will still achieve hot shutdown. However, only NUREG-0460 addresses the issue of non-random control rod failures. That report indicates that possibly 5 to 10 adjacent control rods failing to insert might result in a critical region within the core. However, because the rest of the core would be subcritical, the localized power generation would be lower than the power generated by that region of the core at full power. In fact, the total core power generation would not be expected to be significantly more than decay heat. Therefore, for this project, it is assumed that core damage will not occur if fewer than one-third of the control rods fail to insert in a random pattern or if fewer than 10 adjacent control rods fail to insert.

8.2.3.1 External Components Jam Low Number of Control Rods. Scenarios 1, 2, 3, 5, 6, 7, 9, 10, 11, 13, 15, 17, 18, 20, 22, 27, 28, 29, 30, 31, 33, 34, 35, 55, 58, 61, 64, 70, 73, 75, 76, 79, 85, 101, 107, 111, 114, 118, 121, 122, 123, 124, 125, 126, 130, 134, 135, 139, 143, 145, and 146 all involve external components to CRDs jamming multiple control rods. For most components IGSCC occurs at welds and would result in the production of large loose parts that would not migrate from their original vicinity. There is an extremely small likelihood that a loose part might impact adjacent metal, be broken up, and migrate to the CRD area below the core. One smaller component in which IGSCC does not occur at a weld is the jet pump holddown beam. In Section 9.3 rough estimates are made to indicate that the probability of a loose jet pump beam binding a control rod is less than the screening level. This scenario is believed to bound the other scenarios. In addition, the loose parts study by the BWRVIP (EPRI, 1995) was reviewed, and the overall conclusion that loose parts would not produce a significant increase in CDF appears reasonable.

8.2.3.2 Internal Components Jam Low Number of Control Rods. Scenarios 23, 24, 25, 37, 38, 39, 40, 41, 43, 44, 45, 46, 47, 49, 50, 51, and 53 involve failure of a component within a single control

rod guide tube or housing which could jam that control rod. However, based on the same reasoning as in section 8.2.3.1 a large number of control rods would not be jammed such that core damage would occur.

8.2.4 LOCA Losses Less than Makeup

Scenarios 2, 3, 10, 11, 28, 29, 30, 31, 38, 39, 40, and 41 involve failure of a single bottom head penetration. The makeup of either the LPCI or LPCS is sufficient to keep the core covered.

8.2.5 Redundant Instrumentation

Scenarios 2, 3, 6, 7, 10, and 11 involve loss of a single core instrument line. As there is redundant instrumentation, the loss of a single line would not result in a significant increase in risk.

8.2.6 Low Number of Blocked Fuel Channels

Blockage of a few fuel channels may lead to isolated direct fuel damage, but would not be so widespread that there would be a significant increase in CDF. Scenarios 3, 7, 11, 16, 17, 22, 25, 30, 31, 35, 40, 41, 46, 47, 51, and 124 involve coolant blockage that could lead to isolated direct fuel damage. However, based on the same reasoning as in section 8.2.3.1 a large number of coolant channels would not be blocked such that core damage would occur.

Table 8-1. Scenario screening.

Scenario	Not BWR/4	Low Ranking from PRA	External Comp. Jams Low No. of CRDMs	Internal Comp. Jams Low No. of CRDMs	LOCA Less Than Makeup	Redundant Inst.	Low No. of Blocked Fuel Channels	Needs Further Analysis
1			X					
2			X		X	X		
3			X		X	X	X	
4								X
5			X					
6			X			X		
7			X			X	X	
8								X
9			X					
10			X		X	X		
11			X		X	X	X	
12								X
13			X					
14		X						
15			X					
16		X					X	
17			X				X	
18			X					
19		X						
20			X					
21		X						
22			X				X	
23				X				
24				X				
25				X			X	
26								X
27			X					
28			X		X			
29			X		X			
30			X		X		X	
31			X		X		X	
32								X
33			X					
34			X					
35			X				X	
36								X
37				X				
38				X	X			
39				X	X			
40				X	X		X	
41				X	X		X	

Table 8-1. (continued).

Scenario	Not BWR/4	Low Ranking from PRA	External Comp. Jams Low No. of CRDMs	Internal Comp. Jams Low No. of CRDMs	LOCA Less Than Makeup	Redundant Inst.	Low No. of Blocked Fuel Channels	Needs Further Analysis
42								X
43				X				
44				X				
45				X				
46				X			X	
47				X			X	
48								X
49				X				
50				X				
51				X			X	
52								X
53				X				
54								X
55			X					
56								X
57								X
58			X					
59								X
60								X
61			X					
62								X
63								X
64			X					
65								X
66								X
67								X
68								X
69								X
70			X					
71								X
72								X
73			X					
74								X
75			X					
76			X					
77								X
78								X
79			X					
80		X						
81		X						
82		X						
83		X						

Table 8-1. (continued).

Scenario	Not BWR/4	Low Ranking from PRA	External Comp. Jams Low No. of CRDMs	Internal Comp. Jams Low No. of CRDMs	LOCA Less Than Makeup	Redundant Inst.	Low No. of Blocked Fuel Channels	Needs Further Analysis
84		X						
85			X					
86								X
87								X
88	X							
89	X							
90	X							
91	X							
92	X							
93	X							
94	X							
95	X							
96	X							
97	X							
98	X							
99	X							
100	X							
101			X					
102								X
103								X
104		X						
105		X						
106								X
107			X					
108								X
109								X
110								X
111			X					
112								X
113								X
114			X					
115		X						
116								X
117								X
118			X					
119								X
120								X
121			X					
122			X					
123			X					
124			X				X	

Table 8-1. (continued).

Scenario	Not BWR/4	Low Ranking from PRA	External Comp. Jams Low No. of CRDMs	Internal Comp. Jams Low No. of CRDMs	LOCA Less Than Makeup	Redundant Inst.	Low No. of Blocked Fuel Channels	Needs Further Analysis
125			X					
126			X					
127								X
128								X
129								X
130			X					
131								X
132								X
133								X
134			X					
135			X					
136		X						
137		X						
138	X							
139			X					
140		X						
141		X						
142	X							
143			X					
144								X
145			X					
146			X					
147								X
148								X

9. JET PUMPS EVALUATION

The jet pump was the reactor internals component chosen for the initial study. Fifteen of the 49 scenarios in Table 8-1 include the jet pump. Section 9.1 contains some background information needed to assess the risk, and Section 9.2 summarizes the structural analyses conducted.

9.1 Background Information

In order to assess risk, some background information such as initiating event frequencies and crack growth rates is discussed in this section.

9.1.1 Line Break Initiating Frequencies

In Table 4.9-1, Page 4.9-94 of NUREG-1150 (USNRC, 1989), the LOCA mean frequencies and error factors (EFs) are:

	Mean Frequency	EF
Small LOCA	3.0E-3/yr	10
Medium LOCA	3.0E-4/yr	10
Large LOCA	1.0E-4/yr	10

The BWRVIP studies (BWRVIP, 1997) recommend a 7.51E-6 events/yr probability for a BWR recirculation system LBLOCA. This was based on 0.23 of the total recirculation line length being in the recirculation suction line.

The NUREG-1150 frequency for large pipe [> 8 in. (20.3 cm)] LOCAs needs to be apportioned between the recirculation line, the main steam line, and the feedwater line.

The 12 to 28 in. (30 to 71 cm) recirculation lines are made of Type 304 or 316 stainless steel for which the major degradation mechanism is IGSCC. At least 34 leaks have been detected in BWR recirculation piping over the years (in addition to thousands of cracks). Most licensees have been very active in replacing susceptible piping with more IGSCC-resistant steels (e.g., Type 304NG). For example, the BWR/4 (used in this study) utility has replaced the recirculation, RHR (suction, return, and reactor head spray), RWCU (from the RHR tee in the drywell to beyond the 2nd isolation valve), and core spray (five nonconforming welds). Other plants have used weld overlays, or other methods in addition to, or as an alternative to, full replacement. Because the major degradation mechanism is cracking, leak-before-break (LBB) might be expected, although the NRC has not approved LBB for BWRs.

The 24 to 28 in. (61 to 71 cm) diameter main steam lines are made of carbon steel (e.g., SA-106, Grade B). The major degradation mechanism is erosion. Up to the turbine, the steam quality is high, and extremely little if any erosion has been detected (within UT measurement tolerances). In this portion, about 20 to 30% of the length (differs with design) is between the reactor outlet nozzle and the outboard main steam isolation valves (MSIVs). It is estimated that the percent liquid phase exiting the reactor is 0.1% at full power, and is 0.3% as it reaches the high-pressure turbine. After the turbine, the quality is low, and significant erosion on turbine extraction lines is common. These high- and low-pressure extraction lines are 10 to 26 in. (25 to 66 cm) diameter. BWRs have a stainless steel (to minimize erosion) flow restrictor in each main steam line to limit the loss of reactor coolant inventory in the event of a steam line rupture.

The 12 to 30 in. (30 to 76 cm) diameter main feedwater lines are made of carbon steel (e.g., SA-106, Grade B). The major degradation mechanism is flow-assisted corrosion (FAC). The presence of oxygen (>20 ppb in BWR feedwater) is beneficial in reducing FAC. Feedwater piping wear history at BWRs has been much lower than at PWRs. The feedwater lines from the three feedwater pumps join a single header, then split into two headers to penetrate the containment, then each of these headers splits into three lines (6 total) to enter the reactor vessel. An estimated 30 to 40% of the piping length is within the primary pressure boundary. Plants using hydrogen water chemistry (HWC) inject oxygen into the feedwater to maintain the oxygen level about 30 to 40 ppb. Based on experience in PWR feedwater line breaks from FAC, LBB is not expected.

For the initial years of operation, the LOCA probability of large BWR primary coolant lines was concentrated on the recirculation lines because of their IGSCC problem, although this was unknown at plant startup. Assuming that the IGSCC problem has been satisfactorily addressed at this time, there is now more balance in the LOCA probabilities between the three lines.

No significant degradation has been detected in reactor coolant system portions of BWR main steam or feedwater lines. Breaks outside the MSIVs would impose dynamic loads on the internals, but these breaks can be isolated and would not affect long-term loss of core inventory. The wear rate on main steam lines and extraction steam lines is radically different.

There are several factors that have to be taken into consideration for the estimate: the relative length of lines, the degradation to date, the degradation mechanisms, and the effectiveness of inspections and repairs. To apportion the large LOCA frequency among the three lines, the following simplifying assumptions will be made:

1. Only lines within the reactor coolant system will be considered, that is, no balance-of-plant piping.

2. No part of the large LOCA probability is assigned to the core spray lines, which rarely have flow.

3. Because LBB may occur in recirculation lines (but not endorsed by the NRC for design), a lower percentage (20%) is estimated then for feedwater and main steam lines (80%) where LBB is not expected. Since dry steam erosion wear rates on main steam lines are much lower than FAC wear rates on feedwater lines, a higher probability is assigned to the latter.

Based on the discussion above, the following distribution is made:

1. Recirculation line = 20% ± 10% = 2E-5 events/yr

2. Recirculation line suction = 0.23(2E-5) events/yr = 5E-6 events/yr

3. Main steam line = 10% ± 10% = 1E-5 events/yr

4. Main feedwater line = 70% ± 20% = 7E-5 events/yr

The values in 2, 3, and 4 above will be used in calculations in this report.

9.1.2 Seismic Initiating Frequencies

The mean frequencies for various ground level accelerations were taken from the BWR/4 plant seismic hazard curve and are shown in Table 9-1. The third column lists the mean frequency of exceedence for the corresponding accelerations in the same row of the first column. The mean acceleration between values is also listed in the first column (in bold). The second column lists the mean frequency in the interval between the non-bold values in column 1. The fourth column is the horizontal acceleration at the level of the jet pump support. These values were calculated by multiplying the values in column 1 by a factor of 2.7, which is the amplification between ground level and the elevation at the jet pump support, based on a simplified approach recommended by Kennedy (1998b).

9.1.3 Jet Pump Failure Rates

There have been two random failures of jet pump holddown beams. The first was at the Dresden 3 (BWR/3) plant in 1980. Subsequent inspections showed that there was cracking in at least four other BWR/3s, and five BWR/4s (GE, 1980; NRC, 1980). More recently, cracks have been found in beams of two BWR/6 plants, with one failure (GE, 1993b; NRC, 1993). Table 9-2 summarizes the locations for potential IGSCC degradation in jet pumps, and lists the damage that has been detected to date.

Table 9-1. Seismic initiating frequencies.

Ground Acceleration (g)	Interval Frequency (mean)	Exceedence Frequency	Jet Pump Acceleration (g)
0.051	—	1.06E-3	0.138
0.064	4.56E-4	—	—
0.077	—	6.04E-4	0.208
0.115	4.06E-4	—	—
0.153	—	1.98E-4	0.413
0.204	1.26E-4	—	—
0.255	—	7.23E-5	0.629
0.281	2.44E-5	—	—
0.306	—	4.79E-5	0.826
0.357	2.43E-5	—	—
0.408	—	2.36E-5	1.10
0.459	1.07E-5	—	—
0.510	—	1.29E-5	1.38
0.587	6.95E-6	—	—
0.663	—	5.95E-6	1.79
0.740	2.87E-6	—	—
0.816	—	3.08E-6	2.20
0.918	1.63E-6	—	—
1.02	—	1.45E-6	2.75

Table 9-2. IGSCC damage in jet pumps.

Jet Pump Component	IGSCC	Failure	Mitigation	Notes
Inlet riser elbow	Y	N		Detected visually
Riser brace	Possibly	N		Primarily fatigue cracking
Holddown beam	Y	Y	Redesign	Material & size changes
Transition piece	N	N		
Nozzle	N	N		
Inlet mixer, throat	N	N		
Diffuser, adapter	N	N		

The BWRVIP performed calculations to estimate (BWRVIP, 1996c) the extent of cracking required to fail the inlet riser elbow during normal operation and RBLOCA. The results are summarized below with assumptions as to how they may be applied.

1. It is assumed that the circumferential extent of the crack in the inlet riser elbow weld is greater than the critical length under recirculation suction line break LOCA condition (96% of the circumference) but smaller than the critical length for normal operation (98% of the circumference) based on fracture mechanics analysis using LOCA loads. It is conservatively assumed that a circumferential crack takes about 1 day to grow from 96% to 98%. This time period is referred to as *window of vulnerability*. However, this extent of cracking has never been reported in any BWR piping system including core spray piping. There are several similarities between the core spray piping and riser elbow and piping; they both are thin-walled piping with similar dimensions, have similar residual stress distribution and sensitization, and are exposed to similar oxidizing environment. Therefore, behavior of core spray piping welds would give an indication of the level of cracking that could occur in these welds. Field experience has shown that for the core spray piping welds, no cracking has exceeded 50% of the circumference. The reason is the circumferential distribution of weld residual stresses which vary from tensile to compressive around the circumference considering both weld residual stresses and pipe bending. The presence of compressive stresses limits the circumferential extent of the existing cracks. In addition, the BWR plants have implemented mitigative measures such as hydrogen water chemistry that may prevent crack initiation and limit the crack growth.

2. It is assumed that significant circumferential cracking (>96%) is present in the jet pump riser elbow to thermal sleeve weld. However, such extensive cracking is likely to be detected by in-vessel visual inspection, if inspection scope includes jet pump riser piping. In addition, the visual inspection of other internals in the annulus region would ensure that extensive cracking in the riser piping is unlikely.

For BWR/3 through BWR/6 designs, there are typically 20 jet pumps per plant, although some have 16 and some have 24. For each jet pump pair there are 2 holddown beams, so there are 20 holddown beams per plant.

In NUREG/CR-5750 (Poloski et al., 1999), Appendix J, 710 reactor-years of U.S. BWR operation through 12/31/97 were reported. Of these, 57 were in BWR/2 plants (Oyster Creek and Nine Mile

Point 1), which do not contain jet pumps. Adding 68 reactor years for the 1998-99 period results in 721 rx-yr for BWR/3 through BWR/6 plants until 12/31/99.

The failure rate is:

λ_{hdb} = 2 beam failures/20 beams per rx/721 rx-yr = 1.4×10^{-4} /rx-yr

There have been no failures, but degradation of other jet pump components, particularly inlet risers. Assuming 1/2 failures, with 10 inlet risers per plant, the failure rate is:

λ_{ir} = 1/2 failures/10 risers per rx/721 rx-yr = 6.9×10^{-5} /rx-yr.

Since there has been no major IGSCC detected in other jet pump components, and there are twice as many of other components (20) as for the risers, assume that the failure rate for the risers accounts for all other jet pump components. The IGSCC mechanism is expected to become worse as the plants age, which would increase the failure rate with time. On the other hand, mitigation methods such as improved holddown beam material and geometry, and increased inspections should lessen the probability of a jet pump failure. Assume that these two considerations offset each other, so that the future failure rate will remain the same as in the past. The total random failure rate for each jet pump is then:

$\lambda_{single} = \lambda_{hdb} + \lambda_{ir} = 1.4 \times 10^{-4}$ /rx-yr + 6.9×10^{-5} /rx-yr = 2.1×10^{-4} /rx-yr

Using the same logic, the probability that there will be a random jet pump pair failure (involving any of the 10 jet pump pairs) is:

λ_{any} = 2/721 + 0.5/721 = 3.5×10^{-3} /rx-yr

The probably that two jet pump pairs will randomly fail on the same day is:

$\lambda_{two} = 3.5 \times 10^{-3} (9/10 \times 3.5 \times 10^{-3})/365 = 3.0 \times 10^{-8}$ /rx

Two simultaneous jet pump pair failures is below the screening failure threshold.

Jet pump failures could also occur during pipe break accidents, for the moment not considering seismic events. Assuming the probability of a random jet pump failure during a line break is for one day, the probability of jet pump failure during the line break is:

$\lambda_{jp/lb} = 2 \times 10^{-4}/365 = 5.5 \times 10^{-7}$ /rx-day

The thermal hydraulic loads during these accidents are slightly higher than during normal operation. However, there may be loads from MSIVs closing, jet force thrust from escaping fluid, etc. Nevertheless, massive jet pump failures such that there was complete correlation with the initiating event (correlation = 1.0) would not be expected. From BWRVIP calculations, there is a window of vulnerability of about 1 day for a crack to grow from where it would not cause failure from a LOCA event to where it would fail the jet pump during normal operation and thus be detected. Consequently, a probability of 1/365 will be assumed for a single or common mode failure. The probability of both a recirculation LBLOCA and jet pump failures occurring at the same time is:

$\lambda_{jp/rlb} = (5 \times 10^{-6})/365 = 1.4 \times 10^{-8}$ events/rx-yr for a recirculation line break

This is below the screening value.

$\lambda_{jp/msIb} = (1 \times 10^{-5})/365 = 2.7 \times 10^{-8}$ events/rx-yr for a main steam line break

$\lambda_{jp/fwIb} = (7 \times 10^{-5})/365 = 1.9 \times 10^{-7}$ events/rx-yr for a feedwater line break

The feedwater line break value is slightly above the probability screening value.

9.1.4 Crack Growth Rates

Various models for crack growth rates in stainless steel components have been proposed. Complications arise because of the crack growth rate's dependence on factors such as stress intensity, environmental conditions, and irradiation. Since many of the major reactor internals components are in areas where the cumulative radiation will be lower than the threshold for irradiated-assisted stress corrosion cracking (IASCC), and since there is significantly more data for crack growth rates in unirradiated material, which could make the prediction of crack growth rates in irradiated material highly controversial, the approach taken in this study was to use crack growth rates for unirradiated material.

An early prediction was made by Hazleton and Koo (1982), and is sometimes referred to as the "NRC disposition line". Crack growth rate varies with stress intensity (K), but the values of environmental factors were not available for some of the data used to establish the curve.

In BWRVIP-14 (EPRI, 1996) EPRI recommended three parallel approaches for determining unirradiated crack growth rates in BWR reactor internals stainless steel components. The approach recognized that the crack growth rates were dependent on factors such as stress intensity K, conductivity, electrochemical potential (ECP), and temperature. The approaches are summarized as follows:

1. A K-independent crack growth rate of 2.2×10^{-5} in/hr (1.55×10^{-7} mm/s), which is the 95th percentile curve representing a stress intensity factor of 25 ksi$\sqrt{in}$, a conductivity of 0.15 μS/cm, and an ECP of 200 mV (SHE), which is typical for BWR plants under moderate hydrogen water chemistry conditions. The mean crack growth rate is 2.14×10^{-6} in/hr. (1.51×10^{-8} mm/sec) which is about an order of magnitude lower than the 95th percentile.

2. The second approach is identical to the first, except for a K-dependence, in which the crack growth rate increases with increasing stress intensity.

3. The third approach uses all variables in the crack growth model to establish the 95th percentile crack growth rate.

These recommendations were based and/or tested on data from a number of sources: ABB-Atom, Argonne National Laboratory, General Electric, and from test specimens from actual operation plants.

The NRC reviewed the BWRVIP-14 report and approved its use for cracking in weldments that have not been irradiated in the range greater than 5×10^{20} n/cm^2 (E > 1 MEV), subject to the following conditions (Lainas, 1998):

1. The first approach may be used provided repairs, etc., are considered in evaluating the residual stresses

2. That the component is operated in accordance with the EPRI BWR Water Chemistry guidelines

3. The stress intensity factor K is explicitly determined to be less than 25 ksi$\sqrt{in}$

As part of the risk study, the INEEL arranged for two consultants to look at the data, and make an independent assessment of stainless steel crack growth rates under typical BWR environmental conditions

(Staehle and Was, 1998, prepared for this project). Their determination was that there were two databases that contain crack growth data on 304 stainless steel under conditions germane to this study. They are the BWRVIP database (EPRI, 1996) and the ABB database (Jansson and Morin, 1997). The consultants' opinion was that the variables in the BWRVIP database encompass a considerably wider range of applicability than do those in the ABB database, and the variable ranges of the ABB database are a better match to the objectives of the study. For these reasons, they selected the ABB database on which to make mean (best-estimate) and 95% upper bound estimates of crack growth rate. Their conclusions for the mean and upper-bound estimates were:

Mean da/dt = 5.8×10^{-9} mm/s = 0.0072 in/yr

Upper bound da/dt = 1.95×10^{-7} mm/s = 0.242 in/yr

The upper-bound estimate BWRVIP estimate of 1.55×10^{-7} mm/s (0.192 in/yr) is similar (about 20% lower). However the mean BWRVIP estimate of 1.51×10^{-8} mm/s (0.019 in/yr) is a factor of 2.6 higher than the estimate of the project's consultants, using a different data base and slightly different conditions. Therefore, both estimates will be used for crack growth calculations.

The inlet riser thickness is 0.269 in. Based on the consultant's upper-bound (95%) estimate, a crack (once initiated) would propagate through-wall in only 1.1 years. However, based on the mean estimate, the propagation time would be 37.4 years. Based on BWRVIP growth rates, the upper-bound estimate predicts through-wall penetration in 1.4 yrs, and in 14.2 yrs using the mean value.

9.2 Structural Evaluation

In evaluating the effect of structural failures of jet pump components, it is assumed that the failure initiates at the most likely places, the holddown beams and the inlet riser elbow welds where cracking has been observed to date. However, the result of jet pump disassembly at these locations should give the same overall results as failures at other jet pump component locations, with the exception of the diffuser, whose failure would result in a lower reflood level.

Of interest are the potential targets that could be struck by dislodged components, and routes through which jet pump loose parts could migrate to the lower plenum. The safety concern that could result from failed components are basically the effect of the RPS, i.e., failure of control rods to insert, and diversion of coolant from the core. In the BWR/4 plant, HPCI injects through the feedwater system, LPCS through the core spray system, and LPCI through the recirculation system. Since at this time only those sequences that initiate from jet pump failures are being considered, cascading failures that could damage any of these systems will first be considered.

Two types of loose parts will be considered, large parts that could result in cascading failure, and smaller parts that could migrate to the lower plenum and result in failure of part of the RPS or isolated direct fuel damage. Jet pump component fragilities based on cracks in a holddown beam or an inlet riser elbow under several seismic loads were calculated.

9.2.1 Cascading Failures

Should a jet pump fail there are a number of potential targets that could be impacted by the resulting missile. These are listed in Table 9-3, along with a column stating whether IGSCC damage has been detected in that component, whether we would believe qualitatively that a jet pump could cause a failure of the impacted component, and whether we believe that the failure of the impacted component could cause a safety concern. The reactor vessel, core shroud, and baffle plate were considered to be too thick to be significantly damaged from impact by a dislodged jet pump. Subsequent calculations were

Table 9-3. Potential targets from failed jet pump.

Component	IGSCC Damage	Damage Potential from Jet Pump	Safety Concern	Comment on Safety Concern
Baffle plate	N	N	—	
Baffle plate cover	Y	Y	Lower reflood level	Only for recirculation line break
Tie rod	N	Y	RPS, LPCS diversion	Could fail core shroud
Core shroud	Y	N	—	Only if tie rods fail
Shroud head bolts	Y	Y	None	Only if migration possible; most bolts would have to fail
Core spray line	Y	Y	LPCS failure	Only if migration possible
Adjacent jet pump	Y	Y	Lower reflood level	Only for recirculation line break

performed to estimate what degree of IGSCC damage would have to be present in the core shroud for it to be damaged by an impacting jet pump. If damage was not a concern, then the safety concern was not evaluated. Fluid velocities from Scientech calculations (Appendix E) were used in the evaluation.

The structural analysis showed that should the jet pump inlet riser elbow separate, the forces could be sufficiently large to fail the riser braces and dislodge the upper jet pump assembly above the slip joint. If the holddown beams fail, the upper jet pump would become dislodged as well. However, for the lower jet pump (diffuser) to fail, the welds that attach the jet pump diffuser to the baffle plate would have to fail.

The structural analysis calculations were able to screen several targets that fall into two categories:

1. There is insufficient energy for failed jet pump parts to thrust upward to the core spray lines and beyond to damage them, i.e., the probability of jet pump failing LPCS = 0, assuming the core shroud maintains geometry

2. Impact on thick components such as the reactor vessel, baffle plate, and core shroud would not fail them (if the core shroud were cracked almost through-wall all around its circumference, it could fail, but with present inspections, there is a very high certainty that the cracks would be detected and repairs such as tie rods installed before degradation had progressed that far)

3. Impact would not fail an adjacent jet pump unless the piping had a completely circumferential crack of over 50% wall thickness

This reduces the cascading failure targets to those shown in Table 9-4.

Calculations show that the baffle plate cover and adjacent jet pump would fail from impact by a dislodged jet pump only if they were already severely degraded.

Table 9-4. Potential targets from failed jet pump after initial structural screening.

Component	IGSCC Damage	Damage Potential from Jet Pump	Safety Concern	Comment on Safety Concern
Baffle plate cover	Y	Y	Lower reflood level	Only for recirculation line break
Tie rod	N	Y	RPS, LPCS diversion	Could fail core shroud
Adjacent jet pump	Y	Y	Lower reflood level	Only for recirculation line break; if IGSCC damage in adjacent jet pump

Calculations show that a tie rod would not fail from impact by a dislodged jet pump unless the end connections failed. There are two different tie rod designs, and there could possibly be more in the future. The present designs have either 4 or 10 tie rods. The BWR/4 studied does not have tie rods installed. It is possible that if a dislodged jet pump produced a horizontal impact on a tie rod, the end fixtures could disconnect, failing the tie rod if the end connections were improperly installed. However, in Marsh to Sylvia (1995), section 2.3.7, with respect to a design with four tie rod stabilizers (BWR/2, no jet pumps), it is stated that "...if one stabilizer is postulated to fail during normal plant operation, there would be no consequence to the shroud (even if it is cracked) or to the other three stabilizers."

9.2.2 Loose Parts

Loose parts could migrate from the jet pump area, through open diffuser holes in the baffle plate, into the lower plenum, and lodge in the control rods or fuels. However, to travel through this path, the broken jet pumps parts would have to be small to pass through the openings required for this path. For instance the control rods are almost entirely surrounded by control rod guide tubes, and the orifices through which the coolant passes into the control rod guide tube and up into the orificed fuel supports are small. Any small part that navigated the required path would still have to be able to maintain sufficient strength to inhibit control rod motion. The BWRVIP has conducted a loose parts study (EPRI, 1995) and concluded that there was no significant safety impact from loose parts. Their conclusions appear reasonable.

9.2.3 Seismic Evaluation

The mean frequencies for various ground level accelerations were taken from the BWR/4 seismic hazard curve and are shown in Table 9-5. The third column lists the mean frequency of exceedence for the corresponding accelerations in the same row of the first column. The mean acceleration between values is also listed in the first column (in bold). The second column lists the mean frequency in the interval between the non-bold values in column 1. The fourth column is the horizontal acceleration at the level of the jet pump support. These values were calculated by multiplying the values in column 1 by a factor of 2.7, which is the amplification between ground level and the elevation at the jet pump support, based on a simplified approach recommended by Kennedy (1998b).

Columns 5 and 6 of Table 9-5 list the depth of a crack where failure was calculated based on the ultimate strength of the component (at the various acceleration levels) for a holddown beam and an inlet riser elbow. For accelerations up to 1.02 g, well beyond the design basis, a uniform crack of over 1/2 the height of the holddown beam would have to exist. For the inlet riser elbow, a completely circumferential crack would have to be almost entirely throughwall. Therefore, unless the jet pump is severely degraded by IGSCC, seismic scenarios are screened.

Table 9-5. Seismic evaluation.

Ground Acceleration (g)	Interval Frequency (mean)	Exceedence Frequency	Jet pump Acceleration (g)	Failure Flaw Depth (%) Holddown Beam	Failure Flaw Depth (%) Inlet Riser Elbow
0.051	—	1.06E-3	0.138	92	99
0.064	4.56E-4	—	—	—	—
0.077	—	6.04E-4	0.208	90	99
0.115	4.06E-4	—	—	—	—
0.153	—	1.98E-4	0.413	85	99
0.204	1.26E-4	—	—	—	—
0.255	—	7.23E-5	0.629	81	99
0.281	2.44E-5	—	—	—	—
0.306	—	4.79E-5	0.826	79	99
0.357	2.43E-5	—	—	—	—
0.408	—	2.36E-5	1.10	76	99
0.459	1.07E-5	—	—	—	—
0.510	—	1.29E-5	1.38	73	98
0.587	6.95E-6	—	—	—	—
0.663	—	5.95E-6	1.79	70	98
0.740	2.87E-6	—	—	—	—
0.816	—	3.08E-6	2.20	66	97
0.918	1.63E-6	—	—	—	—
1.02	—	1.45E-6	2.75	62	96

9.3 Probability Estimates

Based on the items remaining after the previous screening, the following probability needs remain:

1. loose jet pump parts migrating to fuel orifice or control rod blades

2. impact of a dislodged jet pump with

   a. baffle plate cover
   b. adjacent jet pump
   c. tie rod

3. cascading failure from a dislodged jet pump of the three components in 2

9.3.1 Loose Parts

Assigning a probability to migrating loose parts has a very high degree of uncertainty, but in this section a best-estimate for loose jet pump parts will be made. From past history the most likely subcomponent to fail is a jet pump holddown beam, and since only a small part could complete the migration path from the jet pump area to inside the control rod guide tube where a fuel channel or a control rod could be blocked, we will assume that the loose part is a holddown beam.

In the case of a broken jet pump holddown beam, the two mixing assemblies of the affected jet pump may lift off and the broken pieces may pass through the ~250-mm-diameter opening at the upper end of the diffuser, if the opening is not blocked by the loose mixing assembly or other loose components. Broken riser braces by themselves would not lead to lifting of the mixing assembly and, therefore, the upper end of the diffuser would not become open to loose parts. So the broken riser braces will not reach the vessel lower head and, therefore, the consequences of broken braces are not considered further.

Three main factors that will determine whether the broken pieces of holddown beam will pass through the opening and to the lower vessel head are size of the loose parts, their velocity (speed and direction), and any blockage of the opening.

The holddown beam may break across the ligament sections of the beam near the beam bolt. The maximum dimensions of the broken pieces will be about 5.5 in. × 5 in. × 2.5 in. The coolant speed in the annulus region from the TRAC-B results is about 2.5 ft/s (760 mm/s). We assume that its direction is towards the recirculating water outlet nozzle. The two components of the velocity of a broken piece are flow velocity and the velocity due to gravity, taking into account the opposing buoyancy effect.

Since the specific gravity of steel is about 7.85, the equivalent acceleration because of gravity and buoyancy effect is $[(7.85-1)/7.85]32.2 = 28$ ft/s^2 (8.5 m/s^2). The vertical displacement of a broken piece will be influenced by the equivalent acceleration and the vertical component of the coolant velocity (assumed to be small). So a broken piece of the holddown beam will reach the opening of the diffuser, which is about 11 ft. (3.4 m) below the holddown beam position (see Fig. 2-21), in about 0.8 s, if its motion is not obstructed by the inlet mixing assembly or transition piece. During this time period, the broken piece will travel about 1.3 ft. (39.5 cm) along the circumferential direction. Since the circumferential distance between the broken beam and the farthest point on the diffuser opening is about 15.5 in. (39.5 cm), the broken piece will reach the opening of the diffuser if its motion is not obstructed.

The probability of a broken holddown beam reaching the lower plenum = P_{lp} = Probability that the broken piece movement is not obstructed (P_{no}) × Probability that the broken piece passes through the diffuser opening (P_{do}).

The mixing assembly, because of its size, is likely to block the diffuser opening. So, in the absence of any other data, we assume a small probability for the riser assembly not blocking the diffuser opening, that is, $P_{no} = 0.1$

The probability P_{do} is estimated as follows. The width of the vessel annulus where the jet pumps are installed is 20 in. (50.8 cm). Considering a broken piece passing through a square of

20 in. × 20 in. surrounding the 10-in. (25.4 cm) diameter diffuser opening, $P_{do} = \frac{\pi (10)^2}{400} = 78/400 =$ 0.2.

So $P_{lp} = 0.1 \times 0.2 = 0.02$.

The broken pieces of a holddown beam, once they pass through the diffuser opening, are most likely to be deposited at the bottom of the reactor vessel lower plenum because of gravity. Since the core plate is at a higher elevation than the baffle plate, it is very unlikely that the recirculating water flow can carry the broken pieces against gravity to the core plate. This is supported by the field experience at a foreign plant where the broken pieces of recirculation pump internals, which traveled through the jet pump, were found at the bottom of the reactor vessel lower head (Stoller, 1989). The largest broken piece was about 4-in. (10-cm) long and weighed 0.02 lb. (9 gm). Since the size and weight of the broken half of the holddown beam are larger, they are likely to be deposited at the bottom of the lower plenum. However, metallic elements were found on 61 of the reactor's 764 fuel assemblies at the foreign plant. So it is possible that very small fragments of broken components may be carried to the fuel orifices by the recirculating water flow and block them. First, we do not know of a mechanism that would crush the jet pump parts into small fragments except by the impacts to the vessel and core shroud walls. We assume a probability of 1E-2 for them to be crushed sufficiently small to be carried by the flow. We assume a probability of 0.1 for the small fragments to block an orifice. So, in the absence of any data, we assume that the probability of the orifice blocked by a broken piece, P_{rb}, provided that it has reached the lower plenum, is small and equal to 1E-2 × 1E-1 = 1E-3. The probability of broken pieces migrating through a baffle plate to the lower plenum (lower head) and rising to block a fuel orifice (P_{fo}) is given by

$$P_{fo} = P_{rb} \times P_{lp} = 1E\text{-}3 \times 2E\text{-}2 = 2E\text{-}5$$

The frequency of a single jet pump failure and migration for loose parts to block an orifice is 2E-5 × 2.1E-4/yr = 4.2E-9/yr. This is below our probability screening criterion.

The probability that the broken pieces will migrate to the lower head and jam a control rod is low. One way the coolant from the lower plenum can enter the interstitial space (the space between fuel assemblies) is through a fuel orifice, and then drop out before entering the assembly. The leak opening is very small, so no broken pieces can pass through. However, in addition to these leak paths, there are openings in the core plate [probably about 1-in. (2.5 cm) diameter] through which the coolant can enter the interstitial space. Assume that the probability of a broken piece passing through the opening in the core plate is about the same as that for reaching the fuel orifice (P_{fo}). However, the width of the interstitial is about 0.2 in., (0.5 cm) so the size of the broken piece should be that small to be able to jam the control rod. Since control rods pass through about half the interstitial space, the probability of the broken pieces jamming one control rod is about half of P_{fo} (1E-5). So the probability of the broken pieces jamming two control rods is 1E-10, which is below our screening probability value.

If the diffuser is also broken, then the broken pieces of a holddown beam have to travel through the opening in the baffle plate. The probability of broken pieces passing through the baffle plate opening is smaller than that of passing through the diffuser opening (when the diffuser is not broken) for two reasons: (1) the broken pieces of holddown beam will take about one second to travel vertically 220 in. (5.5 m) to reach the baffle plate. During this time period, the circumferential displacement will be greater than about 2 ft. (61 cm). Since the farthest point on the opening is about 20 in. (51 cm) away from the centerline of the holddown beam, the broken pieces are more likely to miss the opening. (2) In addition to the mixing assembly, the broken diffuser may also block the opening in the baffle plate. So we assume

that the probability of broken pieces reaching the lower plenum when the diffuser is broken is about half of the probability when it is not broken. The probability estimates for blocking a fuel orifice or jamming a control rod when the diffuser is broken are about 0.5 times the probabilities when it is not broken.

The results for the probability estimates for blocking orifices or jamming control rods are summarized below.

	Probability	
Event	Diffuser not Broken	Diffuser Broken
Blocking one fuel orifice	2.0E-05	1.0E-05
Jamming one control rod	1.0E-05	5.0E-06

9.3.2 Jet Pump Impact

Baffle Plate There are two baffle plate access hole covers located 180-degree apart. There are five jet pumps on each side of a cover. As discussed above, the broken pieces of jet pump holddown beam and riser braces are more influenced by gravity than the flow in the annulus. Therefore, the broken pieces are likely to travel a small distance along the circumferential direction before they reach the baffle plate. So the broken pieces from the four jet pumps adjacent to the cover plate could impact the cover plates. Since the recirculating water outlet nozzle is located at the same angular position as the cover plate but at 40 in. (102 cm) higher elevation, the coolant flow may carry the broken piece out of the vessel before the piece impacts the cover plate. In addition, other parts of the broken jet pump may block the movement of the loose part. In the absence of any quantitative data, we will modify the probability of a broken piece passing through a diffuser opening by two factors to estimate the probability that broken pieces impact the baffle plate covers (P_{c1}). That is,

$$P_{c1} = P_{do} \times (0.4) \times (0.1) = 2.0E\text{-}2 \times (0.04) = 8.0E\text{-}04$$

The factor 0.4 accounts for the fact that the failure at the adjacent pumps can only lead to impacting the cover plate. The factor 0.1 accounts for the fact that a broken piece may be carried over out of the vessel by the coolant flow.

However, a loose mixing assembly from the jet pumps adjacent to the cover plate could impact the cover plate because they are too long to be carried over by the coolant flow to the recirculation piping. This probability, (P_{c2}), will be assumed to be 0.4.

Adjacent jet pump The probability that small pieces (holddown beams and riser braces) of a broken jet pump will impact an adjacent jet pump is small because these pieces will reach the baffle plate before they travel the needed distance along the circumferential direction to impact the adjacent jet pump. In addition, they would be too small to damage an adjacent jet pump. However, a loose mixing assembly could rotate and impact the adjacent jet pump while traveling downward. The probability of such an impact is quite high. Once the mixing assembly of a broken jet pump lifts off, there is a very high probability that it will impact the adjacent intact jet pump. Most likely this impact will be with another mixing assembly because of the circumferential arrangement of the jet pump. We estimate that this probability is about 0.8 because the four riser assemblies (out of the total of 20 assemblies) adjacent to cover plates may not impact the jet pump. The probability of impacting the inlet riser is zero because it has mixing assemblies on both sides. In addition, the radial gap between the riser assembly or diffuser and the vessel wall or core shroud is smaller than the diameter of the mixing assembly, so the loose

mixing assembly cannot impact the inlet riser elbow. Failure of an adjacent jet pump could generate more loose parts and would increase the flow opening that could inhibit maintaining core reflood level during a recirculation line break.

Tie rod The probability of a dislodged jet pump impacting a tie rod is higher than that for impacting an adjacent jet pump because of the close proximity to the tie rod. We assume that this probability is 1.0

The probability estimates for broken pieces of a jet pump impacting the other vessel internals are summarized as follows.

Event	Probability
Impacting a baffle plate cover	0.4
Impacting an adjacent jet pump	0.8
Impacting inlet riser of an adjacent jet pump	0.0
Impacting a tie rod	1.0

9.4 Results

There are five circumstances during which jet pump failure can occur.

1. normal operation
2. main steam line break
3. feedwater line break
4. recirculation line break
5. seismic event

The evaluation of each, based on the probabilities and assumptions developed in this report and the consequences are summarized in the sections below.

9.4.1 Normal Operation

Failures and cracking have occurred in jet pump components. As a result, mitigation effort and increased inspections have been undertaken. Estimates assumed that a jet pump could fail during normal operation. The probability of two random jet pump failures at the same time was below the screening value.

Should a jet pump fail, it could impact an adjacent jet pump or a baffle cover plate, and dislodge them if their IGSCC degradation was sufficiently severe. However, with other systems intact, and operator action to shut down the plant, no significant increase (<5E-6 events/yr) in CDF is expected. A dislodged jet pump could also impact a tie rod, but not dislodge it unless the end connections were improperly installed.

The probability estimates of loose parts causing flow blockage of coolant to the fuel or inhibiting control rod motion are below the screening value.

9.4.2 Main Steam Line Break

The probability estimate of both a main steam line break (MSLB) and a jet pump failure is below the screening value. The loads from a MSLB could fail a severely degraded jet pump (the probability of a MSLB is above the screening value), but jet pump failure would not lead to core uncovering.

9.4.3 Feedwater Line Break

The probability estimate of both a feedwater line break (FWLB) and a jet pump failure is slightly above the screening value. The loads from a FWLB could fail a severely degraded jet pump, but a jet pump failure would not lead to core uncovering.

9.4.4 Recirculation Line Break

The probability estimate of a suction RBLOCA (5E-6 events/yr) is above the screening value, so assuming that a jet pump failure and a core spray line failure have probabilities of 1, that is, they will fail during an RBLOCA, gives an unacceptable increase in CDF. Based on inspection and detection methods that would detect a jet pump or core spray line rupture, in which case the plant could be shut down, and the small window of time that is estimated between crack growth from jet pump failure caused by LOCA loads and resulting from normal operational loads, the increase in CDF is below the screening value.

9.4.5 Seismic Event

A jet pump could fail during a seismic event if it were already severely degraded by IGSCC. The failure consequences would be the same as for a random failure, that is, it could cause loose parts which could migrate toward the core or could increase the possibility of loss of reflood during a recirculation line break.

9.5 Conclusions

A methodology has been developed for estimating the increase in risk caused by IGSCC-induced failures of BWR vessel internals components. A PRA model was developed which can be used for initial screening purposes and to determine the magnitude of component failure probability required for further screening.

The model has been applied to the jet pump. Simplified calculations have been conducted to estimate structural fragilities. Past operating experience has been used to estimate a jet pump failure rate under normal operating conditions. To quantify the risk, engineering judgments had to be made on the probabilities of cracks existing at various depths in components. To accomplish this, estimates were made on crack nucleation and growth times/rates. Estimating the probability of crack detection is even more difficult, as was estimating the probability of loose part migration.

Overall, the sequences which could increase the CDF to an unacceptable level involve:

1. lowering of core reflood level after a recirculation line break, for which the probability is very low assuming operation of the LPCS system

2. if the recirculation suction line imposes sufficient loads on the core shroud with extensive cracking at H5 or H6 welds, and without tie rods, the shroud may fail at this weld and be displaced horizontally. This may make it difficult to insert control rods and reflood the core and will severely affect core cooling

3. impact of a large loose part with improperly installed core shroud tie rods where the core shroud had through-wall completely circumferential cracks.

If one assumes there are existing through-wall cracks in the jet pump and core spray piping such that in the worst-case scenario during a RBLOCA a jet pump and the core spray piping will both fail, there will be an unacceptable increase ($> 5 \times 10^{-6}$ events/yr) in the CDF. Therefore, inspection and detection results must be relied upon to ensure continued operation without an unacceptable increase in the CDF probability. It is concluded that, based on IGSCC degradation of jet pump subcomponents to date and the mitigation and inspection efforts that have been undertaken, scenarios resulting from IGSCC-induced failures of jet pumps will not result in a significant increase ($> 5 \times 10^{-6}$ events/yr) in CDF.

10. EVALUATION OF REMAINING COMPONENTS

The probability of component failure resulting from initial failure of that component depends on a number of factors:

1. Initiation of a crack sufficiently large to propagate
2. Crack growth rate
3. Inspection and repair
4. Extent of crack growth around circumference of component
5. Component fragility under dynamic loads
6. Initiating event frequencies

A simple formulation is:

$$\text{Prob. of Failure} = P_{ci} \times P_{mbi} \times P_{ie} \times P_g \tag{10.1}$$

Where

P_{ci} = probability of crack initiation

P_{mbi} = probability crack missed by inspection

P_{ie} = probability of initiating event

P_g = probability of crack growth through wall and around circumference until critical crack size for dynamic loads is reached

These are discussed in sections 10.1 through 10.4.

10.1 Crack Initiation and Growth

Over the years, cracks have initiated in many of the BWR internals components (Table 4-1). The progression has been that every few years, a new location of cracking is discovered. The latest is the core shroud support cracking in the Tsuruga 1 plant in Japan. This is a result of plant aging, increased inspections, and enhanced inspection methods. It is reasonable to believe that this trend will continue as BWRs age. Therefore, the probability of crack initiation for a component over its lifetime can be assumed to be 1.0. However, this does not mean that the component will fail, as the other 3 factors on the right-hand side of Equation 10.1 are equally as important.

Another important factor, especially for large components, is not only the probability of crack initiation, but the probability of multiple cracks initiating along a circumference. These cracks lined up in the same direction could link together during the crack growth phase to form a long continuous crack making the component more vulnerable to dynamics loads. Since the material, stresses, and environment are the same, it is reasonable to expect that this could occur.

Similarly, there are a number of locations where cracking has been observed that could result in common mode failures. Examples are lower head instrumentation tubes, jet pumps, and control rod blades. Since there are a number of identical instrument tubes, jet pumps, etc., they are made of the same material at the same time by the same manufacturer, and are exposed to the same environment, it is also reasonable that they would experience cracking at the same locations at the same time, which would make the probability of common mode failures higher.

The consultants' best-estimate and upper bound crack growth estimates are 0.0072 and 0.242 in/yr, respectively, and the corresponding BWRVIP values are 0.019 and 0.192 in/yr. One factor that drives crack growth is the stress distribution, especially the residual stress distribution. The residual stress distribution is generally unknown. It might be of benefit if the residual stress distribution is such that a crack is halted before its critical crack size is reached. On the other hand, the residual stress distribution could halt a crack near its critical size. It would not propagate through-wall during normal operation such that it would be detected by monitoring of the operation parameters; but it may await at a depth that would cause failure if there were an initiating event. This could be made worse if there were a number of the components, that, even though the crack growth rate may be different in each, would all be cracked to the critical depth and would fail during an initiating event. Based on the crack history to date, and the crack growth rate estimates by the consultants and the BWRVIP, severe cracking is predicted if no mitigation effects by the BWRVIP are considered.

10.2 Reliability of Inservice Inspection of BWR Vessel Internals

This section first briefly describes the three inspection techniques, ultrasonic testing (UT), visual testing (VT), and eddy current testing (ECT), considered by the BWRVIP Inspection Committee. Then it summarizes the available data related to the reliability of UT, that is, the probabilities of detection and false calls by UT. Finally it summarizes the specific inspection guidance for several of the vessel internals, including the core shroud.

10.2.1 Inspection Techniques

Ultrasonic Testing. UT is a volumetric inspection technique generally employed for detection and sizing of cracks in core shrouds. For certain locations, such as the ID (shroud inside surface) at the H_2 weld location (see Figure 10-7), UT provides the only possible means of examination because the visual inspection has limited accessibility to this region which is blocked by the core spray piping and spargers. Generally, UT examinations have been successful in the detection of core shroud cracking in areas where correlation with visual inspection has been achieved. However, in some cases the ultrasonic crack diffraction technique has undersized crack depths by up to 7.9 mm (0.31 in.) when compared to material samples examined by metallography. This may be due to the tightness and fineness inherent in the crack tip morphology associated with IGSCC (Taylor 1994). It may be necessary to use multiple advanced UT techniques, e.g., OD creeping wave, tip diffraction techniques, refracted longitudinal and shear waves, dual element ID creeping wave, and phased array probes to reliably detect and size a crack. These techniques are being evaluated by the BWRVIP Inspection Committee.

UT inspection of BWR core shrouds and other vessel internals pose the following three problems: (1) limited accessibility, (2) inspection through welds, and (3) inspection of shallow flaws connected to the scanning surface. The presence of other vessel internals limits the inspectable area. As a result, at some weld locations only part length of the welds can be inspected with UT. At some weld locations, accessibility for UT inspection is only from one side of the weld and the heat-affected zone at the other side has to be inspected through the weld.

Single element probes such as 45-degree shear probe have difficulties in detecting shallow flaws connected to the scanning (examination) surface because their presence is obscured by irrelevant indications generated within the wedge. However, such flaws can be detected with a conventional 45-degree shear probe at the full vee path, which is only available when scanning on the shroud cylinder. Dual probes configured to focus at a certain depth can be effective in detecting shallow flaws connected to examination surfaces. The creeping wave probe can detect very shallow defects connected to scanning surfaces.

Several conventional and advanced ultrasonic techniques are being evaluated to address these concerns. Initially, these probes were evaluated for inspecting core shroud welds. Now they are being evaluated for other vessel internals.

Visual Testing. ASME Section XI describes two visual examinations that are relevant to inspection of vessel internals:

1. VT-1 examination is conducted to detect discontinuities and imperfections on the surface of components, including cracks, wear, corrosion, or erosion.

2. VT-3 examinations are conducted to determine the general mechanical and structural condition of components and their supports (such as the core shroud and its support) by verifying parameters such as clearances and physical displacements; and to detect imperfections such as loss of integrity at bolted or welded connections, and loose or missing parts.

Considerable testing relevant to visual inspection of BWR vessel internals has been conducted at the EPRI NDE Research Center. Some of the conclusions are summarized in the remainder of this section (EPRI NDE Center, 1989).

Cleaning of the examination surface is essential for a meaningful visual examination. Direct VT-1 visual examinations may be conducted when access is sufficient to place the eye within 0.61 m (24 in.) of the surface to be examined and at an angle not less than 30 degrees to the surface. Mirrors may be used to improve the angle of vision. Lighting shall be sufficient to resolve a 0.8 mm (1/32-in.) thick black line on an 18% neutral grey card. Since the inspection of vessel internals is performed underwater, remote VT-1 examinations are conducted. These examinations may use camera, telescopes, borescopes, fiber optics, or other suitable instruments, provided such systems have a resolution capability at least equivalent to that attainable by direct visual examination.

The resolution of VT-1 visual examination, however, has been found insufficient to detect tight IGSCC cracks. Therefore, enhanced visual testing, EVT-1, has been developed to inspect the BWR vessel internals. EVT-1 uses a camera having resolution to detect 0.013-mm (0.0005-in.) diameter stainless steel wire placed on the surface of a shroud mockup placed underwater. Probabilities of detection data are not available for EVT-1 examination. It is estimated that the probability of detection (POD) for EVT-1 is likely to be in the range of 80 ± 20 %.[g]

Visual examination of BWR core shrouds is typically performed from the refueling bridge by manipulating a camera attached to a pole or rope. The location of the view observed from the camera is determined by an operator's assessment of where the camera is pointed and where the camera is located. Tests performed at the 6.1-m (20-ft) deep water-filled tank at the EPRI NDE center show that the remote EVT-1 visual examination generally undersize the indications. Remote EVT-1 examinations are used at locations that have limited access for UT examination.

g. Private communication V. N. Shah with G. J. Schuster, Pacific Northwest National Laboratory (PNNL), June 14, 1999.

Eddy Current Testing. Eddy current testing (ECT) of core shroud surfaces has been investigated using a cross-wound, driver-pickup coil. This technique has been used for surface examination of piping welds. The test results show that cracks up to about 40 degrees off-axis can be detected with the cross-wound probe in a single scan. The test results also show that the ECT can provide reliable detection of surface-breaking flaws.

10.2.2 Reliability of Ultrasonic Testing of BWR Wrought Stainless Steel Components

Since early 1980, extensive IGSCC cracking has been reported in BWR wrought stainless steel components, first in recirculation piping and then in core shrouds and other vessel internals. This had led efforts in evaluating the reliability of UT in detecting and sizing IGSCC cracking in wrought stainless steel piping and developing advanced UT techniques to improve the reliability.

The reliability results presented here are mainly for wrought stainless steel piping, but they are equally applicable to BWR vessel internals. There are some differences between the inspection of piping and internals that may affect the inspection reliability. The piping includes geometric reflectors such as the weld root, weld crown, and counterbore, which are not present in vessel internals. The welds in the vessel internals, such as core shrouds, are ground flush to the component surface. Therefore, inspection of piping welds is more difficult. However, UT inspection of vessel internals is subject to more severe access limitations as compared to piping. The results presented here are based on a one-time inspection. Periodic inspections at intervals estimated by the crack growth considerations can increase the probability of detecting the crack before it becomes deep enough to cause a safety concern. Also, use of multiple UT inspection techniques and the simultaneous use of visual inspection can increase the probability of detection (POD).

Simonen (1990) presents data for the range of nondetection probabilities, P_{ND}, for IGSCC cracking in 10-in. (25.4 cm) stainless steel pipe, as shown in Figure 10-1, where

P_{ND} = 1 - probability of detection of a crack
= 1 - POD.

The probability of detection and, therefore, of nondetection are a function of the crack depth. The "poor" and "good" NDE reliabilities are representative of performances by different teams in the PNNL piping inspection round robin carried out in 1981. The inspections were performed using 45-degree shear wave probes. The "advanced" curve is an estimate of the level of performance that can be achieved within the limitations of field procedures and then existing procedures.

There was a significant variation in team-to-team performance in detecting IGSCC cracks, although all teams (including the "poor" teams) met minimum ASME Section XI Code requirements (through 1977 edition and summer 1978 addenda). The "poor" team detected only about 10% of the flaws having a depth of 40% of the wall thickness. In contrast, the "good" team detected about 75% of the flaws at the same depth. The "advanced" curve presents a hypothetical situation. It assigns a 10^{-4} probability of nondetection for a through-wall flaw. This assumes the use of advanced UT techniques, and that the human errors will be the major factor in nondetection of deep flaws. The "advanced" curve shows that more than 99% of flaws at the 40% depth will be detected.

Heasler and Doctor (1996) have also analyzed the results of the 1981 piping inspection round robin. These results were obtained using 2.25 MHz, 45-degree shear wave probes. The results for all the teams, both "good" and "poor" teams, were analyzed together. The results clearly show that the POD for the IGSCC cracks on the far side of the weld (pipe ID) is much smaller than that for the ones on the near side (pipe OD) as shown in Figures 10-2 and 10-3, respectively. For example, the POD for a

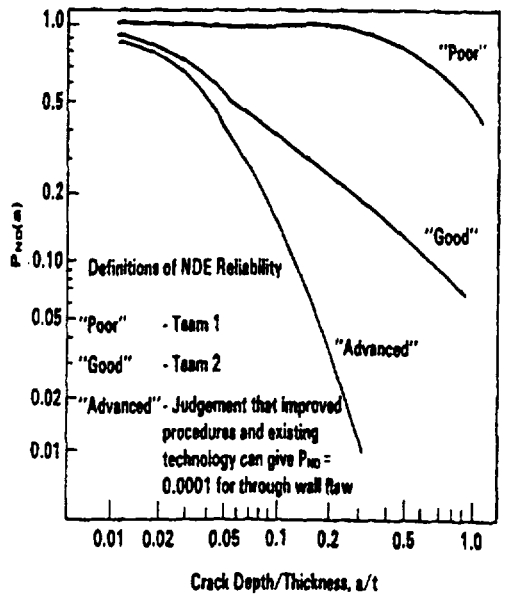

Figure 10-1. Probability of non-detection (P_{ND}) of IGSCC in 254 mm (10 in.) stainless steel pipe (Simonen, 1990).

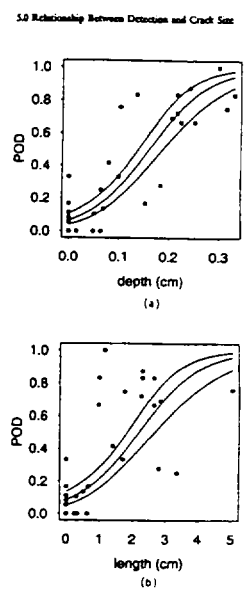

Figure 10-2. Logistic curve fit to POD data with 95% bounds (wrought SS with IGSCC, near-side inspection, all teams). a) POD vs. depth, b) POD vs. length (Heasler and Doctor, 1996).

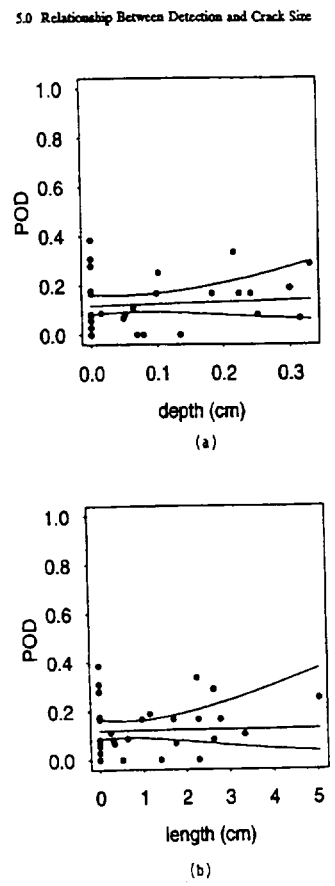

Figure 10-3. Logistic curve fit to POD data with 95% bounds (wrought SS with IGSCC, far-side inspection, all teams). a) POD vs. depth, b) POD vs. length (Heasler and Doctor 1996).

0.2-cm (0.08 in.) deep crack is about 0.7 for the near-side inspection and less than 0.2 for the far-side inspection. Compare Figure 10-2(a) with 10-2(b) and Figure 10-3(a) with 10-3(b).

Doctor et al. (1988) have evaluated NDE reliability for in-service inspection of IGSCC in wrought stainless steel piping. The results also indicate that the probability of detecting IGSCC cracks is influenced by both depth and length of the cracks. Figure 10-4 presents POD data versus crack size for near-side IGSCC cracks in wrought stainless steel material. Note that the crack size in the figure is a function of both crack depth and length. The POD for a crack size of 10 mm (0.4 in.) is about 90%. The POD for similar far-side IGSCC cracks will be lower because inspection through the weld is more difficult. The results show that UT examination with 45-degree shear wave of the far side of a weld is ineffective. Advanced probes, such as phased array probes, have been developed to improve the reliability of the UT examination, and are discussed next. Figure 10-5 presents POD data versus crack size for near-side thermal fatigue cracks in wrought stainless steel materials. Comparison of POD data in Figures 10-4 and 10-5 indicates that reliable detection of thermal fatigue cracks is more difficult than that of IGSCC cracks. For example, POD for a 5-mm (0.2-in.) size IGSCC crack is 50%, whereas that for a thermal fatigue crack of the same size is 18%. Therefore, thermal fatigue cracks can probably serve as conservative surrogates to IGSCC cracks in the laboratory to evaluate NDE reliability.

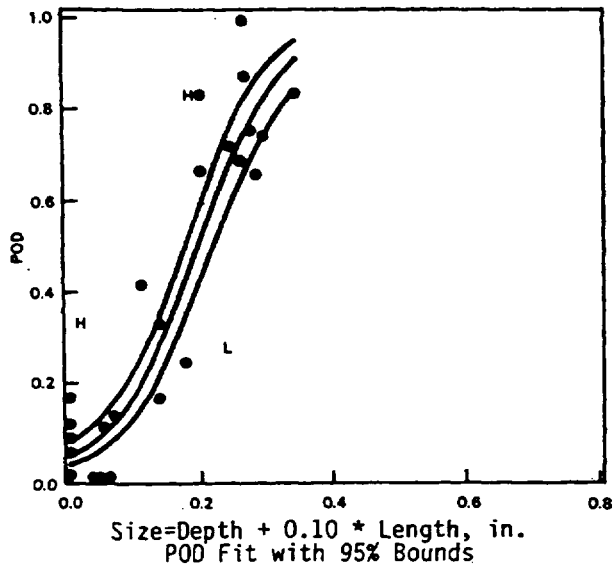

Figure 10-4. Logistic curve fit to POD data versus crack size for near-side IGSCC cracks in wrought stainless steel material (Doctor et al., 1988).

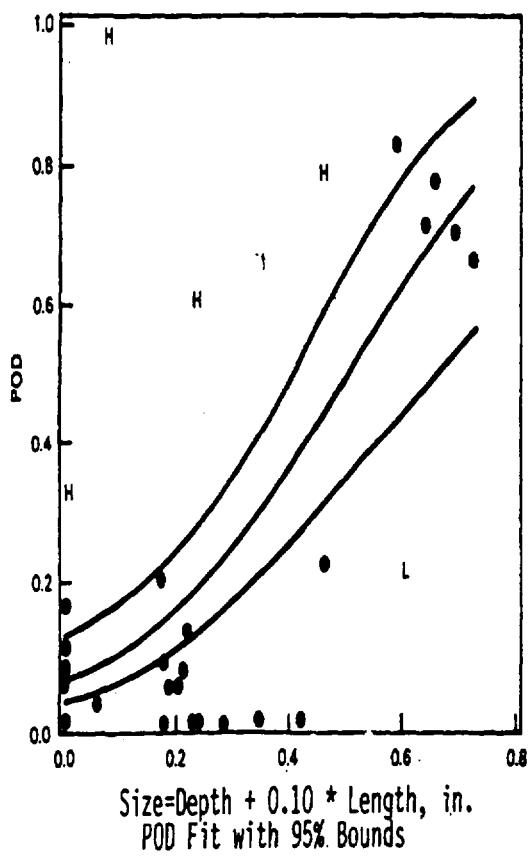

Figure 10-5. Logistic curve fit to POD data versus crack size for near-side thermal fatigue cracks in wrought stainless steel material (Doctor et al., 1988).

Figure 10-6(a) presents the results for the detection and false call rates for personnel that passed the performance demonstration initiative (PDI) acceptance criteria (Ammirato and Becker, 1998). More than 80% of the personnel found more than 80% of the flaws. The flaws included both thermal and IGSCC cracks. The minimum POD for the personnel that passed the acceptance criteria was 0.7. The maximum false call rate was 0.15. Figure 10-6(b) presents the results for the detection and false call rates for personnel that did not pass the PDI acceptance criteria. The minimum POD was 0.5 and the maximum false call rate was 0.75.

Schuster et al. (1998) presented the blind test results for inspecting a BWR core shroud mockup with a phased array inspection procedure. The blind test was conducted of approximately 150 linear inches (3.8 m) of weldment with the ID-connected cracks on the far side of the weld. The cracks included both thermal fatigue and weld solidification cracks. Some notches were also present. The blind test results showed that for the phased array inspection procedure, the probability of detecting the ID-connected flaws on the far side of the weld was 0.82 and the false call rate was 0.09. The POD for a 60-degree longitudinal probe is expected to be smaller than that for the phased array probe, and is likely to be in the range of 50 to 60%.[h] Schuster and his coworkers are further evaluating the reliability of other three probes (2.0-MHz longitudinal wave probe, and ID and OD creeping wave probes) for inspecting BWR core shroud and other vessel internals.

In a generalized sense, at least three instances of localized inspection nondetection would have to occur for a major component to fail, for example, over three beams on a top guide or over three bolts in a core plate. Over three bottom-head instrumentation penetration failures would have to occur for a significant leak. In other cases, three different components would have to fail, such as a jet pump (or baffle plate cover) and both core spray lines during a RLB. Based on an individual examination having a POD of 0.8, missing three cracks would have a probability of $(1 - POD)^3 = 8E\text{-}3$. In addition, the plant staff monitors for flow, power, and noise anomalies inside the vessel as well as leaks from the bottom head. Consequently, the overall probability of nondetection such that a significant increase in CDF would occur is estimated to be less than 0.01.

10.2.3 Inspection Guidance for Vessel Internals

The BWRVIP has performed a generic safety assessment of BWR/2-6 reactor internals to rank them for the development of inspection and flaw evaluation guidelines. The ranking results are as follows:

High priority components: shroud, core spray piping and sparger, core shroud support, top guide, core plate, and standby liquid control support system

Medium Priority components: jet pump assembly

Other internals are ranked as low priority components.

Reliable ISI can play an important role in mitigating risk provided that the safety-significant locations with active degradation mechanisms are inspected. In other words, high POD alone is not sufficient to ensure reduced risk; the ISI plan should include inspection of susceptible safety significant locations. The BWRVIP has used the results of conservative structural analyses and assessment of the safety consequences of component failure to identify susceptible safety-significant locations. The

---

h. Private communication V. N. Shah with G. J. Schuster, Pacific Northwest National Laboratory, June 14, 1999.

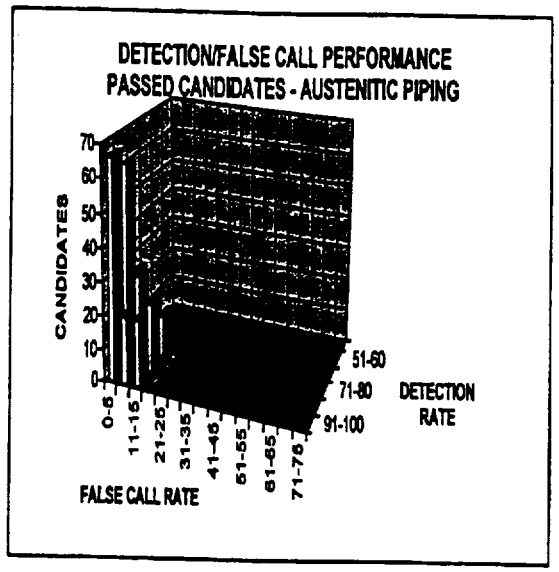

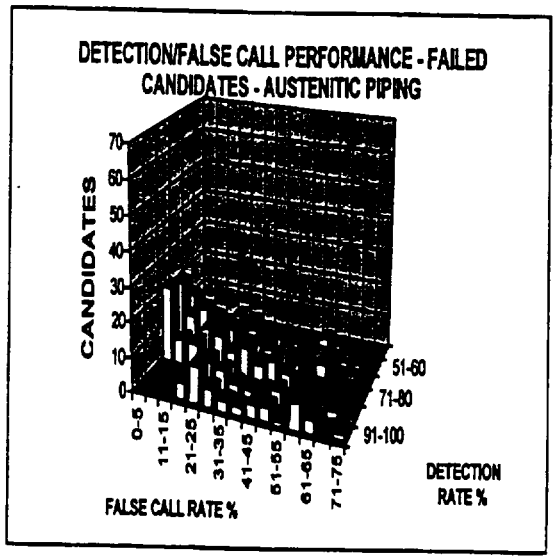

Figure 10-6. Relationship of flaw detection and false call capabilities for (a) successful and (b) unsuccessful candidates for inspection of austenitic piping (Ammirato and Becker, 1998).

inspection guidance for ISI of these locations in the high and medium priority components are contained in BWRVIP, 1997, and BWRVIP 1996 a and b.

Inspection Guidance for Core Shroud. The BWR core shrouds have been separated in three inspection categories based on their materials, coolant conductivity and plant hot operating years: (1) Category A plants - no inspection, (2) Category B plants - limited inspection, and (3) Category C plants - comprehensive inspection recommended (Caine and Mehta 1994). The limited inspection includes inspection of welds H3, H4, H5, and H7, as shown in Figure 10-7. The comprehensive inspection includes inspection of H1 to H5 welds, and inspection of H6 to H8 welds subject to accessibility limitations.

Inspection Guidance for Core Shroud Support. The susceptible safety-significant locations are H8 and H9 welds, gusset welds, and support leg welds. Inspection guidelines of the shroud support structure have been heavily influenced by its accessibility, which may be quite limited in many BWRs.

Inspection Guidance for Core Spray Spargers and Piping. The susceptible safety-significant locations include welds in the core spray piping outside the shroud where potential failure can impede core spray.

Inspection Guidance for Core Plate. The rim hold-down bolts are considered to be the only safety-significant core plate location susceptible to IGSCC. No inspection of the bolts is recommended if core plate wedges were installed because the wedges structurally replace the lateral load resistance provided by the bolts. Such wedges are already included in the BWR/6 design.

10.3 Initiating Event Frequencies

The component failure probability is dependent on the initiating event frequencies. Frequencies for seismic events are discussed in Section 10.3.1, and for line break events in Section 10.3.2.

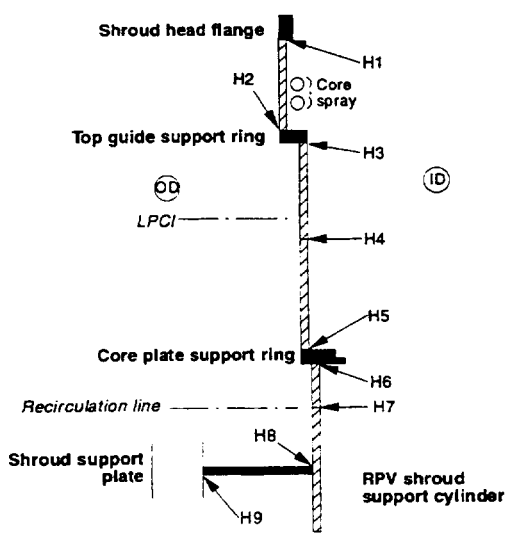

Typical Weld Locations in Core Shroud

Figure 10-7. Typical weld locations in the core shroud.

10.3.1 Seismic Events

Seismic initiating event frequencies for various ground acceleration levels are listed in Table 9-1. Two systems heavily relied upon to mitigate severe accidents are the ECCS and SLC systems; consequently, calculations were carried out using the plant-specific PRA to determine the system failure rates for various ground acceleration levels.

The BWR IGSCC seismic calculations for Low Pressure Coolant Injection (LPCI), Low Pressure Core Spray (LPCS), and Standby Liquid Control (SLC) system failure probabilities are presented in Table 10-2. The system failure probabilities were estimated using the SAPHIRE model for the NUREG-1150 study for each ground acceleration bin for the 1993 updated Lawrence Livermore National Laboratory (LLNL) hazard curve.

Several different calculations were conducted for the Low Pressure Coolant Injection (LPCI) and Low Pressure Core Spray (LPCS) systems. For the LPCI and LPCS systems, system failure probabilities were calculated for the case with both loops failing and then the case with just one loop failing. The LPCI and LPCS systems have two loops (i.e., Loop A and Loop B) with two pump trains in each loop. For the case with both loops failing, the LPCI and LPCS system fault trees as modeled in SAPHIRE loaded database for the NUREG-1150 study were used. For the case with just one loop failing, the respective LPCI and LPCS system fault trees were modified so the probability of failure for just one loop could be estimated. Another calculation was conducted for the failure probability of all Emergency Core Cooling Systems (ECCSs). The ECCS failure probability was estimated by adding a new fault tree that represented failure of both LPCI and LPCS (i.e., a new top gate that is an AND gate with the LPCI and LPCS systems as inputs to the gate). The final calculation was the failure probability of the SLC system. The SLC failure probability was estimated using the SLC system fault tree as modeled with no modifications.

Table 10-1 presents the system failure probabilities for each of the LPCI, LPCS, and SLC system configurations. The truncation values and the non-seismic event system failure probabilities for each case are also presented in the table.

The "Two Loops" columns for LPCI and LPCS systems in Table 10-1 are the system failure probabilities for the case with both loops failing. LPCI and LPCS system configurations consist of two loops with two pump trains in each loop. The LPCI system success criterion is injection of flow from any one pump train to the reactor vessel. Thus, failure of LPCI occurs if four of four pump trains fail to provide flow (i.e., no injection flow from Loop A and Loop B). The LPCS system success criterion is injection flow from any two pump trains to the reactor vessel. Thus, failure of LPCS occurs if two of four pump trains fail to provide flow (i.e., no injection flow from Loop A and Loop B, or no injection flow from Loop A and one of the pumps in Loop B, or no injection flow from Loop B and one of the pumps in Loop A).

The "One Loop" columns for LPCI and LPCS systems in Table 10-1 are the system failure probabilities for the case with just one loop failing. For the one loop failing case, the LPCI and LPCS system fault trees were modified to reflect a configuration of a single loop with two pump trains. Thus, failure of LPCI occurs if two of two pump trains in the one loop fail to provide flow. Also, failure of LPCS occurs if one of two pump trains in the one loop fails to provide flow.

The "All ECCS" column was quantified by solving a fault tree called V2SEIS-AND-V3SEIS which was an AND gate with the original (i.e., as modeled in the "Two Loops" case previously described) LPCI and LPCS system fault trees as inputs.

Table 10-1. System failure probabilities for various seismic ground acceleration levels.

	System Failure Probability					
	Low Pressure Coolant Injection (LPCI)		Low Pressure Core Spray (LPCS)		All Emergency Core Cooling Systems ECCS - LPCI AND LPCS	Standby Liquid Control (SLC)
Ground Acceleration (g)	Two Loops V3SEIS	One Loop V3-RLLOCASEIS	Two Loops V2SEIS	One Loop V2-1-LOOP-SEIS	Both Systems - Two Loops Each V2SEIS-AND-V3SEIS	One Loop System SLC
0.064	1.7E-3	1.3E-2	2.2E-3	4.1E-2	1.1E-3	5.6E-3
0.115	1.8E-3	1.3E-2	2.5E-3	4.3E-2	1.2E-3	5.6E-3
0.204	4.7E-3	1.8E-2	9.4E-3	7.8E-2	4.0E-3	5.9E-3
0.281	1.7E-2	3.3E-2	2.8E-2	1.3E-1	1.6E-2	7.0E-2
0.357	5.7E-2	7.8E-2	7.6E-2	2.1E-1	5.5E-2	1.1E-2
0.459	2.3E-1	2.6E-1	2.7E-1	4.1E-1	2.3E-1	2.7E-1
0.587	6.9E-1	7.2E-1	7.3E-1	7.8E-1	6.9E-1	7.0E-1
0.740	9.8E-1	9.9E-1	9.9E-1	9.8E-1	9.9E-1	9.9E-1
0.918	1.0E+0	1.0E+0	1.0E+0	1.0E+0	1.0E+0	1.0E+0

NOTE:

The "Two Loops" columns for LPCI and LPCS systems are the system failure probabilities for the case with both loops failing. The LPCI and LPCS system configurations consist of two loops with two pump trains in each loop. The LPCI system success criterion is injection of flow from any one pump train to the reactor vessel. Thus, failure of LPCI occurs if four of four pump trains fail to provide flow (i.e., no injection flow from Loop A and Loop B). The LPCS system success criterion is injection flow from any two pump trains to the reactor vessel. Thus, failure of LPCS occurs if two of four pump trains fail to provide flow (i.e., no injection flow from Loop A and Loop B, or no injection flow from Loop A and one of the pumps in Loop B, or no injection flow from Loop B and one of the pumps in Loop A).

The "One Loop" columns for LPCI and LPCS systems are the system failure probabilities for the case with just one loop failing. For the one loop failing case, the LPCI and LPCS system fault trees were modified to reflect a configuration of a single loop with two pump trains. Thus, failure of LPCI occurs if two of two pump trains in the one loop fail to provide flow. Also, failure of LPCS occurs if one of two pump trains in the one loop fail to provide flow.

The "All ECCS" column was quantified by solving a fault tree called V2SEIS-AND-V3SEIS which was an AND gate with the original (i.e., as modeled in the "Two Loops" case previously described) LPCI and LPCS system fault trees as inputs.

The "SLC" column was quantified by solving the SLC system fault tree as modeled in the database. SLC system configuration consist of one loop with two pump trains and two explosive valve trains. SLC system success criterion is flow from one of two pump trains and one of two explosive valves open. Thus, failure of SLC occurs if two of two pump trains fail to provide flow or if two of two explosive valves fail to open.

A 1.0E-10 truncation was used for cut set generation at each case except for the ECCS case. A truncation of 1.0E-8 was used to generate cut sets for the ECCS case. The system failure probability for random failures (i.e., excluding seismic event failures) was equal to the system failure probabilities calculated at the 0.064 g level. This indicates that the random failures of the system components dominate the system failure probability results at the lowest g level. The results in the table also indicate that the seismic component failures start to dominate the system failure probability (at least a doubling of the system failure probability) at ground accelerations between 0.115 and 0.281 g.

The SLC system failure probabilities were quantified by solving the SLC system fault tree as modeled in the database. The SLC system configuration consists of one loop with two pump trains and two explosive valve trains. The SLC system success criterion is flow from one of two pump trains and one of two explosive valves open. Thus, failure of SLC occurs if two of two pump trains fail to provide flow or if two of two explosive valves fail to open.

Table 10-2 lists the probability of loss of ECCS (both LPCS and LPCI) and loss of SLC during a seismic event. Each row represents a different ground acceleration interval, with the g level in the first column as the minimum in the interval. The 4th column is the product of the 2nd and 3rd columns, and is the probability of having a seismic event with an acceleration level in that interval, and a loss of ECCS. The 6th column is the product of the 3rd and 5th columns, and is the probability of having a seismic event and a loss of SLC. At the bottom of the table, the probabilities for seismic levels >0.05 g, > 0.15 g, and >0.30 g are listed (the design earthquake level is 0.12 g for the BWR/4 plant). Although the seismic probability changes over two orders of magnitude between >0.05 g and 0.30 g, the seismic/ECCS and seismic/SLC probabilities change very little. From the PRA, the total probability of having both a

Table 10-2. Probability of seismic event with loss of ECCS function.

Minimum Seismic Level in Interval (g)	ECCS Failure Probability in Interval	Seismic Probability in Interval	Seismic/ECCS Failure Probability in Interval	SLC Failure Probability in Interval	Seismic/SLC Failure Probability in Interval
0.051	1.10E-03	4.56E-04	5.02E-07	5.60E-03	2.55E-06
0.077	1.20E-03	4.06E-04	4.87E-07	5.60E-03	2.27E-06
0.153	4.00E-03	1.26E-04	5.04E-07	5.90E-03	7.43E-07
0.255	1.60E-02	2.44E-05	3.90E-07	7.00E-02	1.71E-06
0.306	5.50E-02	2.43E-05	1.34E-06	1.10E-02	2.67E-07
0.408	2.30E-01	1.07E-05	2.46E-06	2.70E-01	2.89E-06
0.51	6.90E-01	6.95E-06	4.80E-06	7.00E-01	4.87E-06
0.663	9.90E-01	2.87E-06	2.84E-06	9.90E-01	2.84E-06
0.816	1.00E+00	1.63E-06	1.63E-06	1	1.63E-06
1.02	1.00E+00	1.45E-06	1.45E-06	1	1.45E-06
> 0.05 g		1.06E-03	1.64E-05		2.12E-05
> 0.15 g		1.98E-04	1.54E-05		1.64E-05
> 0.30 g		4.79E-05	1.45E-05		1.39E-05

seismic event at any acceleration level, coupled with a loss of ECCS, is 1.5E-05 events/yr (point estimate). From an uncertainty analysis performed using the SAPHIRE code and a sample size of 10000 for all g levels, the mean value is 2.4E-04 events/yr, and the 5th and 95th percentiles are 2.1E-04 and 3.1E-04 events/yr, respectively. The uncertainty analysis results are probably dominated by the portion truncated below 0.051 g.

10.3.2 Line break events

From Section 9.1.1, the NUREG-1150 initiating events frequencies adjusted for BWR internals are 5E-6 events/yr for the suction RLB, 1E-5 events/yr for the MSLB, and 7E-5 events/yr for the FWLB.

10.4 Component Fragilities

The fragilities computed for the BWRVIP internals reports were reviewed. In addition, a finite element model of the BWR/4 plant was developed and flow and seismic loadings were imposed to determine:

1. the extent of cracking needed to fail a reactor internals component during seismic or accident conditions

2. the extent of damage to surrounding components if the component being investigated failed

In general, it was found that extensive through-wall and circumferential cracking has to exist for component failure. As an example for 100% circumferential flaws, greater than 75% of the depth of the wall would have to be cracked for failure to occur. Individual component evaluations are as discussed in section 10.5.

10.5 Component Evaluations

10.5.1 In-Core Instrument Housings (scenarios 1-4)

On the BWR/4 plant evaluated, the housings are 50.42 mm (1.985 in.) OD and 38.1 mm (1.5 in.) ID. They are welded to the reactor vessel using a weld with a 7.94 mm (5/16-in.) minimum thickness.

The upper end is welded to the guide tube. Cracking has been detected in the housing of one plant. The housings are checked for leakage from the reactor vessel lower head, and eddy current inspections of the tubes are conducted. Scenario 4 is a common mode failure of scenario 3, where some significant numbers of housings fail. The major cause of a significant number of housings failing would be a seismic event that could cause the common mode failure of a number of housings if they were degraded. The probability of a seismic event with loss of ECCS is about 1.5E-05 events/yr. Based on the consultants' crack growth estimates, it would take a crack about 37 years to propagate through wall at the best-estimate rate, but only 1 year at the upper-bound rate. Based on BWRVIP crack growth rates, the corresponding times are 14 years and 1.4 years. With monitoring and inspection, the risk can be screened.

10.5.2 In-Core Instrument Guide Tube (scenarios 5- 8)

These are not pressure boundary components, nor has there been degradation detected. All but scenario 8 has been screened; this involves a seismic event in which there would be a common mode failure of the tubes, which would break into small pieces that would jam control rods and block coolant channels. The probability of a seismic event, severely degraded guide tubes, and breaking up/migration/passage into control rods is estimated to be below the screening level.

10.5.3 Instrumentation and Dry Tubes (scenarios 9-12)

These are pressure boundary components, but the damage that has been detected has not been in the pressure boundary area. All but scenario 12 has been screened. This scenario is similar to scenario 4, except there is less risk because scenario 4 involves both the housing and the housing to vessel weld, whereas scenario 12 involves only the tube, and no degradation of the pressure-retaining portions of the tubes has been detected.

10.5.4 Core dp line (scenarios 13-17)

These scenarios have been screened.

10.5.5 SLC line (scenarios 18-22)

These scenarios have been screened. However, scenarios that initiate from other components and involve a multiple failure including the SLC line have not been screened.

10.5.6 CRD Blade (scenarios 23-26)

Degradation has been detected in CRD blades. Scenario 26 has not been screened. However, blades undergo periodic inspections and are relatively easy to replace. Criteria have been established for blade replacement. Therefore, the risk from multiple CRD blade failures is considered managed.

10.5.7 CRD Housing (scenarios 27-32)

No degradation has been detected. These scenarios are similar to scenarios 4 and 12, with respect to loss of pressure boundary integrity. All but scenario 32 has been screened. As with scenario 4, inspection must be relied upon to prevent common mode failures.

10.5.8 CRD Guide Tube (scenarios 33-36)

No degradation has been detected. Scenario 36 has not been screened. This involves a seismic event in which there would be a common mode failure of the tubes, which would break into small pieces that would jam control rods and block coolant channels. The probability of a seismic event, severely degraded guide tubes, and breaking up/migration/passage into control rods is estimated to be below the screening level.

10.5.9 CRD Stub Tube (scenarios 37-42)

Early stub tubes experienced cracking caused by poor welding practices and susceptible materials. Changes to welding procedures and practices, as well as materials, have been used to mitigate the problem. Stub tube leakage has occurred periodically at Nine Mile Pt. 1 since 1984. All but scenario 42 has been screened. This is similar to scenario 4, with respect to loss of pressure boundary integrity. As with scenario 4, monitoring and inspection must be relied upon to prevent common mode failures.

10.5.10 CRD Index Tube/Spud/Thermal Sleeve (scenarios 43-52)

Nitraded stainless steel index tubes have not experienced IGSCC. The ASME Code does not call for inspection of CRDM internals, but sampling inspections can be conducted. All but scenarios 48 and 52 have been screened. These are common mode failures of CRDM internals. Severe IGSCC needed to cause failures should be detected by inspection and monitoring before widespread degradation has taken place.

10.5.11 Fuel Support (scenarios 53 and 54)

Scenario 53 has been screened. Scenario 54 represents common mode failure of fuel support pieces during a seismic event. No IGSCC of these pieces has been observed. They are visually inspected when the control rod blades are changed. Therefore, it is expected that localized damage would be detected before widespread cracking on multiple fuel support pieces would occur.

10.5.12 Core Shroud Support (scenarios 55- 57)

IGSCC has been found in core shroud supports of a U.S. and in 1999 an overseas BWR. Event 55 has been screened. Structural studies of the configuration of the BWR/4 studied showed that tipping is not expected during a seismic event. This type design has several support legs. Inspections cannot be performed unless the jet pumps or bottom-head CRDMs or instrumentation are removed. However, in the shroud designs in which cracking has occurred, there is a ring support instead of support legs. For this type design, inspections are needed to ensure that widespread cracking that could lead to tilting of the core internals and possible failure by crimping of the SLC lines does not occur. For a severely cracked support of this type under a large magnitude earthquake, the core could shift and the SLC line system could fail (see Table 10-2). The ring support can be inspected without access to the lower plenum. Cracking has been found in this type design. The ring and column design plants are difficult to inspect and limited inspections have been performed. However, there is less likelihood of core movement in the event of severe IGSCC damage with this design.

10.5.13 Access Hole Cover (scenarios 58-60)

Access hole cracking has been detected. Scenario 58 has been screened. Failure of the access hole cover by itself will not significantly increase the CDF. It is only with a RLB, coupled with failure of the access hole cover and failure of core spray piping such that the core spray bypasses the core, that an

unacceptable condition occurs. Inspection of access hole covers and core spray piping is needed to ensure that these multiple failures do not occur.

10.5.14 Core Plate (scenarios 61-63)

Significant cracking has been observed in the rim-weld area of an overseas BWR. Scenario 63 has been screened. The major concern is failure of the bolts connecting the plate to the core shroud during a seismic event. Assuming common mode IGSCC failure of these bolts, the plate might slide inhibiting rod motion and crimping the SLC system. The structural analysis does not predict major impact damage to other components. Using worse case assumptions of a 1.0 probability of crack formation, no inspection, and maximum crack growth would be unacceptable. With inspection, the overall risk is acceptable (Δ CDF < 5E-06 events/yr).

10.5.15 Core Shroud (scenarios 64-69)

Chapter 3 discussed core shroud degradation. Scenario 64 has been screened. The remaining scenarios involve coolant flow redirection and eliminating functionality of control rods. The structural analyses showed that the lateral displacement is limited, and that there would not be sufficient energy to crush a core spray line during a seismic event. This is a very critical component, and with monitoring, inspection, and repair the risk is acceptable (Δ CDF < 5E-05 events/yr). The response of a core shroud with tie rods was not evaluated.

10.5.16 Core Shroud Head/Bolts (scenarios 70-74)

IGSCC of the bolts has been observed. Scenarios 70 and 73 have been screened. The structural analyses showed that the displacement is limited, and that there would not be sufficient energy to crush a core spray line or steam separators during a seismic event. This area is accessible for inspection, and with inspections being performed, the overall risk is acceptable (Δ CDF < 5E-06 events/yr).

10.5.17 Guide Rod (scenario 75)

This scenario has been screened.

10.5.18 Top Guide (scenarios 76-78)

IGSCC has been detected in top guides. Scenario 76 has been screened. The top guide could displace laterally during a seismic event and inhibit rod motion. However, this area is accessible for inspection, and the SLC system would still be available for plant shutdown. This area is accessible for inspection, and with inspections being performed, the overall risk is acceptable (Δ CDF < 5E-06 events/yr).

10.5.19 Core Spray (scenarios 79-87)

Scenarios 79-85 have been screened. IGSCC has been detected at a number of locations in the core spray system. Structural evaluations show that impacting is not risk significant. Loss of core spray is significant when coupled with a RLB and an opening in the baffle plate. Inspections, evaluations, monitoring, and repair are needed to provide an overall acceptable risk condition (Δ CDF < 5E-06 events/yr).

10.5.20 Feedwater Sparger (scenarios 101-106)

Scenarios 101, 104, and 105 have been screened. Clearance evaluations and structural calculations show that impacts to jet pumps and shroud head bolts will not result in significant increases in risk.

10.5.21 Jet Pump (scenarios 107-134)

These scenarios were evaluated in Chapter 9. A multiple failure of a RLB, one or more jet pumps, and the core spray system such that core spray was not directed into the core could cause a loss of reflood capability. Inspection of jet pumps and core spray piping is needed to ensure that these multiple failures do not occur.

10.5.22 Standpipe and Steam Separators (scenarios (135-144)

Scenarios 135-143 have been screened. The structural calculation showed that there was insufficient energy in a loose part to completely block the steam flow path.

10.5.23 Head Spray (scenario 145)

This scenario has been screened.

10.5.24 Surveillance Specimen Holder (scenarios 146-148)

IGSCC damage has been detected in the neutron source holders. GE has recommended that neutron source holders be removed, since they are no longer needed.

Evaluations of geometry and clearances show that it is very highly unlikely that a loose part generated from a falling surveillance specimen holder could impact an access hold cover, and could dislodge only a severely degraded access hole cover.

10.6 Potential Increase in Core Damage Frequency Caused by Multiple Vessel Internals Failures

The BWR reactor internals support the following five safety functions:

1. Maintaining a coolable geometry
2. Maintaining control rod insertion times
3. Maintaining reactivity control
4. Assuring core cooling effectiveness
5. Assuring instrumentation availability

The potential core damage from multiple vessel internals failure was evaluated during normal operation and accident conditions.

10.6.1 Normal Operation

The reactor internals are fabricated from Type 304 and 316 SS or Alloy 600. The welds in internals are susceptible to stress corrosion cracking. Since these materials are ductile and the loads acting on the internals during normal operation are of small magnitude, the critical crack sizes for the internals are large, both in the circumferential length and through-wall dimension. Therefore it is very likely that the inservice inspection using qualified techniques, such as enhanced visual testing-1 (EVT-1) and advanced UT techniques (e.g., phased array and creeping wave), performed at appropriate time intervals can detect these cracks before they reach critical dimensions. Appropriate repair and mitigation then can be carried out in a timely manner. Consequently, it is unlikely that IGSCC failure of a reactor internals weld during normal operation would cause any core damage. If we conservatively assume that IGSCC can cause a complete failure of a weld, one failed weld will not compromise any of the above five safety functions. Simultaneous failures of several welds are needed to cause core damage. Such simultaneous failure during normal operation is very unlikely because of the variability in the IGSCC susceptibility of the welds. In summary, the IGSCC failures of reactor internals during normal operation will not lead to a significant increase in the core damage frequency.

10.6.2 Accident Conditions

Three accident conditions are considered: main steam and feedwater line breaks, and recirculation line suction loss-of-coolant accident (LOCA).

Main Steam/Feedwater Line Break. The MSLB break inside the containment would depressurize the reactor vessel and impose vertical upward force on shroud head. In the worst scenario, assuming a through-wall crack along the entire circumference of a core shroud at the H_2 or H_5 welds, the upper portion of the shroud may be lifted and prevent the insertion of the control rods. In addition, the displaced portion of the shroud may damage the core spray piping, which might have been degraded by IGSCC. Under these conditions, use of the standby liquid control (SLC) system can control the reactivity. The movement of the core shroud will not damage the SLC piping which is typically located below the shroud in the lower plenum. The cracked core spray piping may inject coolant in the downcomer instead of in the core. But eventually the coolant will reach the core. So core cooling effectiveness will not be affected. If one core spray piping has been crimped because of the shroud movement, then the second core spray and the low-pressure coolant injection (LPCI) can provide adequate core cooling. The upper portion of the core shroud could be lifted only for a very short time during the MSLB event, so the coolable geometry will be maintained.

The MSLB/FWLB probabilities coupled with the probability of multiple cracked internals that have been missed by inspection such that the cracks have propagated to the critical dimensions are below the screening value.

Recirculation Line Suction LOCA. Recirculation line suction LOCA, in a conservative assessment, can cause failure of jet pump riser pipe welds and riser restrainer brackets and lead to disassembly of the jet pump. This will lead to a failure to maintain coolable core geometry. If core spray lines have failed so that the core spray is injected in the downcomer, then the core cooling effectiveness will be compromised. This may lead to core damage, but the corresponding conservative estimate of the increase in core damage frequency is 1.4×10^{-8} events/yr, which is smaller than 10^{-7} events/yr, and, therefore, not risk significant. This was calculated in Section 9.1.3 and was based on the probability of a recirculation line suction break occurring during the one-day time estimated by the BWRVIP for a crack to grow from where it would not cause failure during a LOCA event to where it would fail during normal operation and be detected ($5 \times 10^{-6}/365 = 1.4 \times 10^{-8}$).

The recirculation suction line LOCA imposes transient, asymmetric pressure load on core shroud. This pressure load, however, being of very short duration, is not sufficient to deform and displace the shroud, even though a circumferential through-wall IGSCC crack at the H_5 weld may be present. So the coolable geometry will be maintained and no core damage will take place.

10.6.3 Seismic Events

A seismic event may cause failure of control rod guide tube and housing welds that may prevent insertion of several rods. This may not be a problem if the SLC system is available. If the SLC system piping is cracked because of the seismic event, the neutron absorber (sodium pentaborate) can still be injected in the lower plenum to shut down the reactor from full power. However, the distribution of the neutron absorber will not be uniform and the shut down may be slow and inefficient. If the seismic event is of sufficient magnitude (beyond design basis), the probability of SLC failure is high. Degraded bottom head penetrations can fail during a seismic event. For seismic events of sufficient magnitude (beyond design basis), the probability of ECCS failure is high. However, with the BWRVIP program in place, the risk is acceptable ($<5 \times 10^{-6}$ events/yr increase in CDF).

Failure of a jet pump diffuser because of a seismic event or a recirculation line LOCA event may allow loose parts, which may be present on the baffle plate before the accident or may be produced during the accident, to enter the lower plenum. Small loose parts may be carried over by the coolant flow and may block the fuel support piece orifice. This will block the fuel bundle flow and may cause local fuel damage. However, the probability of loose parts during a seismic event has been judged to be below the screening value.

A seismic event can also cause failure of holddown assemblies for the top guide and/or holddown bolts for the core plate and cause horizontal shifting of these components. This may prevent rod insertions. However, as long as neutron absorber is available from the SLC system, a seismic event will not lead to an increase in core damage frequency. The probability of SLC failure increases with seismic magnitude. With the BWRVIP program in place, the increase in CDF is $<5 \times 10^{-6}$ events/yr.

10.7 Summary

Based on Equation 10.1, multiple failure of reactor internals during internal or external events is not likely to increase the core damage frequency by more than 5×10^{-6} events/yr. Most of the 148 postulated scenarios were easily screened. For other, particular common mode, failures where a number of similar components may be degraded to their critical depths, the initiating event frequencies are sufficiently high so that one has to either assume that the crack progression differs in similar components or that the inspections, monitoring, evaluations, and repairs are adequate to preclude multiple failures. Based on observations to date, there is no evidence of similar crack rate initiation and progression on a large scale. The inspections, monitoring, evaluations, and repairs developed by the BWRVIP seem to offer the greatest assurance that risks are kept to an acceptable level. A probability of IGSCC detection of 0.8 has been estimated for reactor internals components. For the initiating event frequencies for seismic events and LOCAs, periodic inspections with a POD of 0.8 reduce the risk probability below the screening value even if it is assumed that the crack probability is 1.0 and there is a high probability of substantial crack growth.

11. SUMMARY

Over the 25 years from 1974 to 1999, IGSCC degradation has been detected in at least 15 different BWR vessel internals components internationally. The number of different types of components that have experienced cracking has increased over the years, and is expected to continue to increase. To date, most of the safety concerns have been focused on core shroud degradation. However, it is recognized that a cascading failure or common mode failure of other reactor vessel internals could also have a significant effect on plant safety. While the near-term risk of this cracking has been judged by the NRC staff to be acceptable, the magnitude of the long-term risk has not been fully evaluated. The purpose of this report is to conduct risk studies that can be used to estimate the long-term risk associated with IGSCC of BWR vessel internals.

To provide background information on IGSCC of BWR vessel internals, the differences in BWR types were studied, concentrating on the design features relevant to IGSCC cracking. The history of IGSCC cracking in core shrouds, as well as other reactor internals, was catalogued. Mitigation, repair, and replacement efforts were studied, in particular, the vertical tie rod designs being used to place compressive loads on core shroud horizontal welds that have undergone degradation.

Various assumptions were made in order to initiate the process of identifying failure scenarios. A list of possible consequence scenarios was developed in an attempt to cover a broad list of possible, but reasonable, situations that could result from IGSCC degradation of reactor vessel internals. Single failures, common mode failures, and cascading failures were evaluated. The potential for loose parts from IGSCC-degraded internals was incorporated into the development of every failed internal. A multi-step process was followed which ultimately generated four tables (Tables A-1 through A-4) that describe the consequences of IGSCC-induced failures. This multi-step process incorporates which loadings were being considered and whether or not cascading effects were being considered.

Nearly 250 different and unique scenarios were identified (Table A-4). However, such a large number of scenarios meant that a significant amount of time could be spent trying to determine whether or not all of those scenarios are truly significant contributors to increasing the CDF or offsite dose risk to the public as a result of IGSCC-degraded internals failures. Therefore, in order to reduce the number of scenarios to be considered for further detailed risk evaluation, a screening logic process was created that identifies those aspects that are important to safety.

The screening logic was applied to all of the postulated internal failures. Table 6-5 lists 148 scenarios which were not eliminated by the screening logic. These scenarios are considered to be the scenarios that may be significant contributors to increasing the risk to the public with respect to BWR plant safety if IGSCC-induced failures occur to reactor vessel internals.

A certain number of potential BWR design vulnerabilities can be identified. These include:

- Of the eight initiating events (see first column of Table 5-2), the RLB potentially creates more safety concerns than any other event, due to maintaining the two-thirds core reflood capability and the loss of LPCI in BWR/3s and 4s.

- The BWR/2s, 3s, and 4s typically do not have multiply redundant ECC injection inside the core shroud beyond that provided by core spray (two independent lines). This reduces the number of ECC options available to the plant operator when various accident situations arise. BWR/5s and 6s have a single HPCS, a single LPCS, and three independent LPCI lines.

- The BWR/2s do not have a low-pressure ECC flood capability which reduces the ECC options for accident mitigation.

The 148 failure scenarios in Table 6-4 were evaluated to qualitatively estimate the rank (high, medium, or low) of each with respect to their anticipated effect on the increase in core damage frequency (CDF). The results are listed in Table 7-1. In most cases, a high risk ranking was made.

In order to narrow the scope of the problem, the investigation was limited to a single BWR type (high-power BWR/4). Using several screening methods, the scenarios to investigate were reduced by about 2/3. To further concentrate the investigation and develop a methodology to be used, scenarios resulting from the failure of a single component (jet pump) were evaluated. The evaluation was then extended to the remaining reactor internals components.

The conclusions from the study are:

- IGSCC has been detected at many locations in BWR vessel internals.
- IGSCC cracking is expected to continue as the plants age.
- Consequently, the probability of developing IGSCC cracks in all safety-related reactor internals is assumed to be 1.
- With no inspection, monitoring, or repair, there are a number of BWR vessel internals, if severely degraded by IGSCC, that could fail either in a common mode or cascading manner, leading to an inability to insert rods or cool the core in the event of a severe internal or external event.
- With no credit for inspection, monitoring, and repair (no BWRVIP program), and a probability of significant cracks developing of 1, coupled with the initiating event frequencies and system failure frequencies in the PRA studied, an undesirable increase in the plant CDF ($> 5 \times 10^{-6}$ events/yr) is predicted.
- The BWRVIP submittals have been reviewed, independent confirmatory assessments and analyses have been performed, and probability estimates have been made for cascading events. The calculations and estimates in the documents submitted by the BWRVIP appear reasonable.
- With the current BWRVIP inspection, monitoring, and repair program, there is expected to be no significant increase in CDF ($< 5 \times 10^{-6}$ events/yr) caused by failures of BWR vessel internals. That is, IGSCC problems can be identified and evaluated or corrected, to preclude a significant increase in the CDF.
- While this risk study was performed for a BWR/4 plant, the results should be applicable to all BWRs since the inspection and repair methods are generally the same for all types.

In conclusion, the BWRVIP program of IGSCC aging management of BWR vessel internals, including inspection, monitoring, and repair, along with NRC/NRR review of the BWRVIP activities, creates an atmosphere of acceptable risk for continued BWR operation.

12. REFERENCES

Ammirato, F., and L. Becker, 1998. "Lessons Learned from 18 Years of Experience with the NDE Performance Demonstration in the US Nuclear Power Industry," ICONE-6043, *Proceedings of the 6th International Conference on Nuclear Engineering, May 10-14, 1998, San Diego, CA.*

ANRE/MITI, 1999, Nuclear Power Safety Administration Division, "Cracks Found During the Periodic Inspection of Unit-1 of the Tsuruga Power Station," Press Release, Dec. 10.

Briant et al., 1986, "The Effect of Microstructure on the Corrosion and Stress Corrosion Cracking of Alloy 600 in Acidic and Neutral Environments," *Corrosion*, Vol. 42, p. 15.

Brinkman, D.S., 1994, "Summary of June 28, 1994, Meeting to Discuss Inspection and Repair Criteria for Core Shroud Cracking", July 7.

Brook, M.V., 1986. "Ultrasonic Transducers Design for Detection and Characterization of Cracks in Nuclear Primary Pressure Piping," *Proceedings of the 8th International Conference on NDE in the Nuclear Industry, 17-20 November 1986, Kissimmee, Florida*, American Society for Metals, Materials Park, Ohio, pp. 439-445.

Brown, K.S., and G.M. Gordon, 1987, "Effects of BWR Coolant Chemistry on the Propensity for IGSCC Initiation and Growth in Creviced Reactor Internals Components", *Third International Symposium on Environmental Degradation of Materials in Nuclear Power Systems-Water Reactors, Traverse City, Michigan, August 30-September 3, 1987*, National Association of Corrosion Engineers, Houston, Texas, pp. 243-247.

BWRVIP letter to USNRC, 1995, "Request for Information Regarding the Impact of BWR Core Plate and Top Guide Ring Cracking", January 3. [First seven of twenty-four pages (body of letter without tables, figures, or attachments) of this document were included in NRC's IN 95-17 as Attachment 2]

BWRVIP, 1996a, *BWR Vessel and Internals Project - BWR Top Guide Inspection and Flaw Evaluation Guidelines* (BWRVIP-26, non-proprietary version), December, pp. 3-1 to 3-13.

BWRVIP, 1996b, *BWR Vessel and Internals Project - BWR Core Plate Inspection and Flaw Evaluation Guidelines* (BWRVIP-25, non-proprietary version), December, pp. 3-1 to 3-12.

BWRVIP, 1996c, *BWR Vessel and Internals, Project - Assessment of BWR Jet Pump Riser Elbow to Thermal Sleeve Cracking* (BWRVIP-28, non-proprietary version), December.

BWRVIP, 1997a, *BWR Vessel and Internals Project - BWR Shroud Support Inspection and Flaw Evaluation Guidelines* (BWRVIP-38, non-proprietary version), September, pp. 3-1 to 3-20.

Caine, T.A., and H.S. Mehta, 1994. *BWR Core Shroud Inspection and Flaw Evaluation Guidelines,* GENE-523-113-0894, GE Nuclear Energy, September 1994.

Chu, T.L., and W.T. Pratt, 1995, *Evaluation of Potential Severe Accidents During Low Power and Shutdown Operations at Surry, Unit 1*, NUREG/CR-6144, October.

Davis, J.M., 1991, "ID Creeping Wave Techniques for Detection, Characterization, and Sizing of Planar Flaws," *NDE: Applications, Advanced Methods, And Codes and Standards,* PVP-Vol. 216/NDE-Vol. 9, American Society of Mechanical Engineers, New York.

Davis, J.M., 1999, *Advanced Ultrasonic Training for Detection and Sizing and Performance Based Qualification Training* (class notes), *October 11-21, Idaho Falls, ID.*

Dean, R.S., et al., 1984, "Closeout of IE Bulletin 80-07: BWR Jet Pump Assembly Failure", NUREG/CR-3052, November.

Doctor, S. R., et al., 1988, *Nondestruction Examination (NDE) Reliability for Inservice Inspection of Light Water Reactors*, NUREG/CR-4469, PNL-5711, Vol. 7.

Eide, S.A., et al., 1999, *Reliability Study: General Electric Reactor Protection System, 1984 – 1995* , NUREG/CR-5500, Vol. 3, April.

Electric Power Research Institute, 1995a, *BWR Vessel and Internals Project, Reactor Pressure Vessels and Internals Examination Guidelines (BWRVIP-03, non-proprietary version)*, EPRI TR-105696, October.

Electric Power Research Institute, 1995b, *BWR Vessel and Internals Project: Safety Assessment of BWR Reactor Internals (BWRVIP-06, non-proprietary version)*, EPRI, Palo Alto, CA, EPRI TR-105873, October 1995.

Electric Power Research Institute, 1996, *BWR Vessel and Internals Project: Evaluation of Crack Growth in BWR Stainless Steels RPV Internals (BWRVIP-14, non-proprietary version)*, EPRI, Palo Alto, CA, EPRI TR-105873, March 1996.

EPRI NDE Center, 1989, *Visual Examination Technology*, Competency Area 102, NDE Technical Skills Training Series.

Fontana, M.G., 1986, *Corrosion Engineering*, 3rd Edition, MeGraw Hill, pp. 51-59.

Ford, F.P., 1988, "On-Line BWR Materials Monitoring and Plant Component Lifetime Prediction", ANS/ENS Topical Meeting on Nuclear Power Plant Life Extension, Snowbird, UT, July 31-August 3, 1888, American Nuclear Society, LaGrange, IL, pp. 355-366.

General Electric Company, 1978, "Removal of Startup Source Holders for the Reactor Pressure Vessel", SIL 215, Rev. 1, April 7.

General Electric Company, 1980, "Jet Pump Beam Cracks", SIL 330, June 9; Supplement 1, "BWR/4 Jet Pump Beam Cracks", February 1, 1981.

General Electric Company, 1981, "Control Blade Lifetime", SIL 157, Rev. 2, September.

General Electric Company, 1986a, "Inspection of SRM/IRM Dry Tubes", SIL 409, Rev. 1, July 31.

General Electric Company, 1986b, "Shroud Head Bolt Cracks", SIL 433, February 7; Revision 1, Sept. 15, 1993.

General Electric Company, 1988, "Shroud Support Access Hole Cover Cracks", SIL 462; Supplement 1, February 22, 1989; Supplement 2, August 1990; Supplement 2, Rev. 1, December 19, 1990; Supplement 3, June 6, 1992.

General Electric Company, 1989, "Core Spray Piping Visual Inspection", SIL 289, Rev. 1, Supplement 1, Rev 1, March 15.

General Electric Company, 1990, "Core Support Shroud Crack Indications", RICSIL 054, October 3; Rev. 1, July 21, 1993.

General Electric Company, 1993a, "Core Shroud Cracks", SIL 572, October 1; Rev. 1, October 4.

General Electric Company, 1993b, "Jet Pump Beam Cracking", RICSIL 065, December 3.

General Electric Company, 1994a, "BWR Core Shroud Evaluation", GENE-523-148-1193, April.

General Electric Company, 1994b, "Update on Core Shroud Cracking", RICSIL 068, May 6, 1994.

General Electric Company, 1994c, "Top Guide and Core Plate Cracking", RICSIL 071, November 22.

General Electric Company, 1995a, "Top Guide and Core Plate Cracking", SIL 588, February 17.

General Electric Company, 1995b, "BWR Core Shroud Inspection and Flaw Evaluation Guidelines", GENE-523-113-0894, Revision 1, March.

General Electric Company, 1997, D. K. Morton and A. G. Ware (LMITCO/INEEL) personal notes from meeting with NRC staff and GE staff in San Jose, CA on March 14.

Gerber, T.L., et al., 1986, *Evaluation of BWR Top-Guide Integrity*, EPRI NP-4767, Electric Power Research Institute, Palo Alto.

Jansson, C., and U. Morin, 1997, "Assessment of Crack Growth Rates in Austenitic Stainless Steels in Operating BWRs", *8th International Symposium on Environmental Degradation of Materials in Nuclear Reactor Systems - Water Reactors*, National Association of Corrosion Engineers, Houston, TX, p. 667.

Hazleton, W.S., and W.H. Koo, 1982, *Technical Report on Material Selection and Processing Guidelines for BWR Coolant Pressure Boundary Piping*, USNRC, NUREG-0313, Revision 2, January.

Heasler, P.G., and S.R. Doctor, 1996, *Piping Inspection Round Robin*, NUREG/CR-5068, PNNL-10475.

Jones, R.L., and J.L. Nelson, 1990, "Hydrogen Water Chemistry for BWRs: A Status Report on the EPRI Development Program", *Nuclear Engineering and Design 124*, North-Holland, Amsterdam, pp. 33-42.

Kennedy, R.P., 1998a, *Suggested Upgrading of NUREG-1150 Seismic Risk Assessment For Use in Intergranular Stress Corrosion Cracking Risk Assessment*, letter report prepared for the INEEL (Appendix C).

Kennedy, R.P., 1998b, *Simplified Approach for Estimating Seismic Input Levels Acting on Reactor Internal Components for Seismic Fragility Analysis*, letter report prepared for the INEEL (Appendix D).

Lainas, G.C. (USNRC) letter to C. Terry (BWRVIP Chairman), 1998, "Safety Evaluation of the BWR Vessels and Internals Project BWRVIP-14 Report (TAC No. M94975), June 8.

Luk, K.H., 1993, *Boiling-Water Reactor Internals Aging Degradation Study*, NUREG/CR-5754, ORNL/TM-11876.

Marsh, L.B. (NRC) to B.R. Sylvia (Niagara Mohawk Power Corporation), 1995, letter "Nine Mile Point Nuclear Station Unit 1 (NMP1), Evaluation of Core Shroud Stabilizer Design (TAC No M91273)", March 31.

Matsumoto, J., 1999, "Core Shroud Replacement of Fukushima-Daiichi Unit #3", *Nuclear Engineering and Design 191*, pp. 167-175.

Medoff, J., 1996, *Status Report: Intergranular Stress Corrosion Cracking of BWR Core Shrouds and Other Internal Components*, NUREG-1544.

Novak, T.M. (NRC) letter to N.W. Curtis (PP&L), 1985, "Reactor Vessel Steam Dryer, Steam Dryer Support Bracket, and Core Spray Piping Cracks - Susquehanna Unit 1", May 28.

Poloski, J.P., et al., 1999, *Rates of Initiating Events at U.S. Nuclear Power Plants: 1987-1995*, NUREG/CR-5750, INEEL/EXT-98-00401.

Schuster, G.J., S.L. Crawford, A.F. Pardini, and S.R. Doctor, 1998, "Reactor Internals UT Parametric Study," *presented at the First International Conference on NDE in Relation to Structural Integrity for Nuclear and Pressurized Components, 20-22 October, 1998, Amsterdam, The Netherlands.*

Selby, G., 1998, "Development of Phased Array Ultrasonic Examination Applications at the EPRI NDE Center," ICONE-6041, *Proceedings of the 6th International Conference on Nuclear Engineering, May 10-14, 1998, San Diego,CA..*

Shah, V.N., and P.E. Macdonald, 1993, *Aging and Life Extension of Major Light Water Reactor Components*, Elsevier, Amsterdam.

Sheron, B. W. (NRC), letter to BWRVIP, 1994, "Evaluation of *BWR Shroud Cracking Generic Safety Assessment*, Revision 1, GENE-523-A107P-0794, August 5, 1994 and *BWR Core Shroud Inspection and Evaluation Guidelines*, GENE-523-113-0894, September 2, 1994", December 28.

Sheron, B. W. (NRC), letter to BWRVIP, 1995, "Evaluation of *BWR Core Shroud Inspection and Evaluation Guidelines*, GENE-523-113-0894, Revision 1, Dated March 1995, and *BWRVIP Core Shroud NDE Uncertainty & Procedural Standard*," Dated November 22, 1994", June 16.

Simonen, F. A., 1990, "An Evaluation of the Impact of In service Inspection on Stress Corrosion Cracking of PWR Piping," *Codes and Standards and Applications for Design and Analysis of Pressure Vessel and Piping Components – 1990*, PVP – Vol. 186, NDE – Vol. 7, pp. 187-193.

Staehle, R.W., and G.S. Was, 1998, "Crack Growth Rate Analysis for 304 Stainless Steel", letter report prepared for the INEEL, (Appendix B).

Stoller (S. M. Stoller Corporation) 1991, "Byron-Jackson Recirc Pump Failure—Bearing Housing Ring Weld Failure, Broken Impeller," *Nuclear Power Experience,* BWR-2, V, A, p.17.

Stoller, S. M. (Corporation), updated 1995, *Nuclear Plant Experience*, Section BWR-2, Volumes II, III, and IV.

Stramback, G.B. (GE), letter to C.H. Berlinger (NRC), 1992, "Access Hole Cover Radial Cracking", July 9.

Taylor, J.M. (NRC), letter to the Commissioners, 1994, "Stress Corrosion Cracking of BWR Internals - Update on Core Shroud Cracking", November 10.

Thadani, A.C. (NRC), letter to the BWROG, 1995, "Boiling Water Reactor (BWR) Core Shroud Repair Evaluations", May 18.

U.S. Nuclear Regulatory Commission, 1978, *Anticipated Transients Without Scram for Light Water Reactors*, NUREG-0460, Vol. 2, April.

United States Nuclear Regulatory Commission, 1979, "Boiling Water Reactor Fundamentals", Technical Training Center.

United States Nuclear Regulatory Commission, 1980a, Information Notice 80-07, "BWR Jet Pump Assembly Failure", April 4.

United States Nuclear Regulatory Commission, 1980b, IE Bulletin 80-13, "Cracking in Core Spray Spargers", May 12.

United States Nuclear Regulatory Commission, 1980c, Bulletin 79-26, Revision 1, "Boron Loss from BWR Control Blades", August 29.

United States Nuclear Regulatory Commission, 1981, Standard Review Plan, NUREG-0800, Section 3.9.3, Revision 1, July.

United States Nuclear Regulatory Commission, 1988, Information Notice 88-03, "Cracks in Shroud Support Access Hole Cover Welds", February 2.

United States Nuclear Regulatory Commission, 1989, *Analysis of Core Damage Frequency: Peach Bottom Unit 2 Internal Events*, NUREG/CR-4550, Vol. 4, Rev. 1, Part 1.

United States Nuclear Regulatory Commission, 1992, Information Notice 92-57, "Radial Cracking of Shroud Support Access Hole Cover Welds", August 11.

United States Nuclear Regulatory Commission, 1993a, Information Notice 93-79, "Core Shroud Cracking at Beltline Region Welds in Boiling Water Reactors", September 30.

United States Nuclear Regulatory Commission, 1993b, Information Notice 93-101, "Jet Pump Hold-Down Beam Failure", December 17.

United States Nuclear Regulatory Commission, 1994a, Information Notice 94-42, "Cracking in the Lower Region of the Core Shroud in Boiling Water Reactors", June 7; Supplement 1, July 19.

United States Nuclear Regulatory Commission, 1994b, Generic Letter 94-03, "Intergranular Stress Corrosion Cracking of Core Shrouds in Boiling Water Reactors", July 25.

United States Nuclear Regulatory Commission, 1995, Information Notice 95-17, "Reactor Vessel Top Guide and Core Plate Cracking", March 10.

U.S. Nuclear Regulatory Commission, 1997a, Information Notice 97-02, "Cracks Found in Jet Pump Riser Assembly at Boiling Water Reactors", February 6.

U.S. Nuclear Regulatory Commission, 1997b, Information Notice 97-17, "Cracking of Vertical Welds in the Core Shroud and Degraded Repair," April 4.

U.S. Nuclear Regulatory Commission, 1997c, *Individual Plant Examination Program: Perspectives on Reactor Safety and Plant Performance*, NUREG-1560, December.

U.S. Nuclear Regulatory Commission, 1997d, *Regulatory Analysis Technical Evaluation Handbook*, NUREG/BR-0184, January.

U.S. Nuclear Regulatory Commission, 1998, Regulatory Guide 1.174, "An Approach for Using Probabilistic Risk Assessment in Risk-Informed Decisions of Plant-Specific Changes to the Licensing Basis", July.

Walker, S. and G. Selby, 1994, "Preliminary Investigation into the Applicability of Creeping Wave UT to BWR Shroud Examinations," Letter Report, EPRI NDE Center, Charlotte, North Carolina.

Ware, A.G., 1993, "Boiling Water Reactor Vessel Internals", Chapter 22 of Aging and Life Extension of Major Light Water Reactor Components, V.N. Shah and P.E. MacDonald, editors, pp. 750-786, Elsevier, Amsterdam.

Whitehead, D.W., 1995, *Evaluation of Potential Severe Accidents During Low Power and Shutdown Operations at Grand Gulf Unit 1*, NUREG/CR-6143, July

Williams, F.J. (NRC), letter to R.A. Capra, 1994, "Status Report - BWR Jet Pump Hold-Down Beam Failures", February 16.