LICENSEE POST-EXAM COMMENTS

BROWNS FERRY 2000-301
50-259, 260, and 296/2000-301

JUNE 12 - 15, JUNE 27 - 29, AND
JUNE 30, 2000

LICENSEE POST-EXAM COMMENTS
AND NRC RESOLUTION

BROWNS FERRY POST-EXAMINATION COMMENT RESOLUTION

1. RO AND SRO QUESTION # 48

   Comment accepted. The additional information provided identifies justification for allowing distractor "D" as an additional correct answer. The answer key will be changed and credit will be given for either answer "A" or "D."

2. RO AND SRO QUESTION # 57

   Comment accepted. The additional information provided justifies the deletion of this question based on no possible correct answer. The answer key will be changed and the question will be deleted from the examination.

3. RO AND SRO QUESTION # 78

   Comment accepted. The additional information provided identifies justification for allowing distractor "B" as an additional correct answer. The answer key will be changed and credit will be given for either answer "D" or "B."

4. SRO QUESTION # 9

   Comment accepted. The information provided justifies changing the answer from "A" to "B." The answer key will be changed and credit will be given for answer "B."

ENCLOSURE 4

RO and SRO question # 48 (233000A3.02 001)

Accept 2 correct answers.

"A" is correct as stated in the answer key.

"D" is also correct based on the following information:

Along with powering Fuel Pool Cooling pump 1A (answer "A"), the 480V Shutdown Board 1A also powers RBCCW pump 1A. Loss of RBCCW pump 1A would result in low pressure in the RBCCW system resulting in closure of the 1-FCV-70-48 valve which would isolate the non-essential RBCCW flow path. The Fuel Pool Cooling heat exchangers are located on the non-essential flow path and thus RBCCW would be isolated to the Fuel Pool heat exchangers. (1-FCV-70-48 would not lose power as a result of the loss of 480V Shutdown Board 1A as the valve is fed from the 480V Shutdown Board 1B via the 480V Reactor MOV Board 1B.) These actions are unaffected by Unit 1's current status (shutdown with fuel removed from the RPV) and the actions described would occur.

Reference OPL171.047 Revision 7, Pages 8,9,11, and TP-2 (attached)

47. 226001A4.03 001/ ROT2G2/ SROT2G1/ 3.5/3.4/ C/A/ MODIFIED/ BF00301/ BOTH/ 72

Given the following conditions:

RPV level -190 inches
RPV Pressure 920 psig
Drywell pressure 2.95 psig
A valid LPCI initiation signal is present

Which one of the following are required to be completed in conjunction with **ONLY** placing the RHR Containment Spray select switch XS-74-1-121/129 in Select to open the Containment Spray valves?

✓A. Raise RPV level to -180 inches only.

B. Reduce drywell pressure to 1.6 psig only.

C. Raise RPV level >-120" AND reset the LPCI initiation signal.

D. Raise RPV level to >-120 inch reactor level AND reduce drywell pressure to 1.6 psig.

REF: OPL171.044, Rev. 8, Page 34/36, Sections m.(4) / o.(4).
1996 BFNP RO EXAM #65 modified to give plant conditions

HELP significant work required change to the select switch being operated JMP
JUSTIFICATION
a.& d. RPV level interlock is bypassed with keylock
c. LPCI initiation signal is bypassed

48. 233000A3.02 001/ ROT2G3/ SROT2G3/ 2.6/2.6/ MEMORY/ NEW/ BF00301/ BOTH/ 146

A trip of the 480 V Shutdown Board 1A will have which of the following effects on the spent fuel pool system?

✓A. Trips Fuel Pool Circulating Pump 1A.

B. Trips Fuel Pool Circulating Pump 1B.

C. Isolates the fuel pool water flow to the fuel pool heat exchanger.

D. Isolates the RBCCW to the fuel pool heat exchangers.

NEW - OPL171.052 003 Rev 5 Obj. V.B.7
Solution:
A. Correct - Obj. V.B.7.
B. Pump 1B powered from 480 V Shutdown Board 1B (Similar for Unit 2 & 3)
C. Trips only one pump, does not isolate flow to the heat exchanger.
D. Does not effect the Shell side - reactor building closed cooling water (RBCCW)
JMP

INSTRUCTOR NOTES

f. A surge tank is located above the highest point in system. It allows for water expansion within the system and the addition of make up water.

B. Component Description — TP-1

1. RBCCW Pumps

a. Each of these horizontal, centrifugal pumps is rated at 1700 gpm. Each provides 50% of the required cooling flow for a unit's loads. Each A and B pump is powered from its unit 480V Shutdown Board, A or B, respectively. The spare pump, 1C, is supplied from 480V Shutdown Board 1B. The spare pump is aligned to be immediately available for Unit 2 use.

b. No minimum flow line is provided.

(1) The system is filled with clean demineralized water with sufficient valves open in the system to ensure minimum flow through the pumps, to prevent them from overheating.

(2) Since the system is filled when the pumps are started, there is sufficient system flow resistance to prevent pump run-out.

c. Pump and heat exchanger combinations

(1) An equal number of pumps and heat exchangers is normally used.

(2) Reason: Two pumps and one heat exchanger would exceed the capacity of the heat exchanger, causing excessive vibration.

(3) Proper system flow operation is assured by monitoring the system DP (pump discharge minus pump suction). — Done shiftly

INSTRUCTOR NOTES

2. RBCCW Heat Loads — TP-2

   a. Essential loop loads — Obj. V.B.2

      (1) Drywell control air compressors (2)

      (2) Drywell atmospheric coolers (10)

      (3) Reactor recirculation pump motor coolers (2)

      (4) Reactor recirculation pump seal coolers (2)

      (5) Drywell equipment drain sump heat exchanger (1)

   b. Non-essential loop loads — Obj. V.B.3

      (1) Reactor Building equipment drain sump heat exchanger (1)

      (2) Reactor water cleanup pump seal water coolers and bearing oil coolers (2)

      (3) Nonregenerative heat exchangers (2)

      (4) Fuel pool cooling heat exchangers (2)

      (5) Reactor recirculation pump sample discharge cooler (1)

3. RBCCW Heat Exchangers

   a. These provide the means for heat removal from RBCCW by RCW with Emergency Equipment Cooling Water (EECW) as a backup.

   b. They are counter-flow type, 50% capacity each.

      (1) RBCCW flow makes one pass through the shell side.

      (2) RCW makes one pass through the tube side.

      (3) RBCCW flow is in the opposite direction to RCW flow.

INSTRUCTOR NOTES

(2) These MOVs are interlocked to permit alignment of the spare pump to only one unit at a time, to prevent cross-tying of the Unit RBCCW Systems.

ROTORK valves have open, closed, and mid position. Mid does not indicate a % of valve open or closed.

b. FCV-70-48 controls the RBCCW supply to the non-essential equipment loop.

(1) It automatically closes on:

Obj. V.B.4

(a) Loss of normal AC power with any U1/2 diesel generator tied to a U1/2 4kV shutdown board as a sole source, in conjunction with an accident signal; i.e., initiation of U1/2 480V Load Shed Logic. Unit 1 accident signal input has been disabled by lifting leads per DCN H2735A.

Obj. V.C.1

CAS signal 2.45 psig DW with 450 psig Rx or -122" Level

Unit 3 70-48 closes on low pressure as a result of the pump trips from load shed

(b) Low RBCCW supply header pressure of 57 psig.

(2) The 48 valve requires operator action to re-open after automatic closure.

(3) If the NORMAL/EMERGENCY switch for the 48 valve ACB is in EMERGENCY all automatic closure functions are defeated, and the valve must be operated from the breaker control switch.

(4) Each unit's 48 valve is powered from that unit's 480V RMOV Board B.

c. FCV-70-47 controls the RBCCW return flow from the essential equipment loop. There are no automatic closing signals for this valve. Each unit's 47 valve is powered from that unit's 480V RMOV Board B.

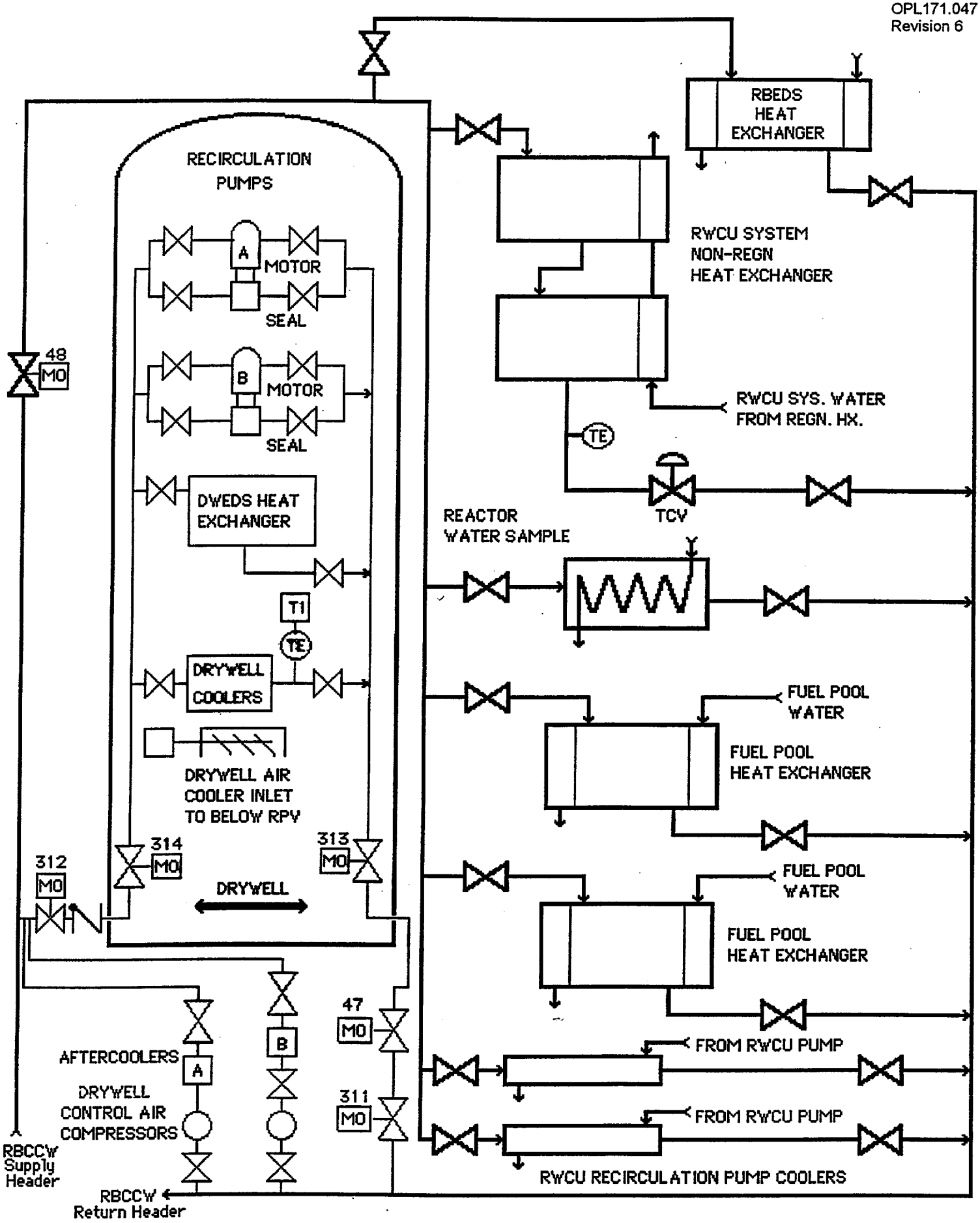

TP-2: RBCCW SYSTEM LOADS

RO and SRO question # 78 (295021AK2.01)

Accept both answers

"D" is correct per the answer key

"B" is also correct based on the following information:

Verifying RPV level at 80 inches promotes natural circulation. The water in the core is heated and it rises up through the core and up to the separator then back to the downcomer. This natural circulation causes some of the cool CRD water (~ 80 degrees Fahrenheit at 60 gpm) to be circulated through the core and vessel. If level was not at 80 inches the cooler water would stagnate at the bottom of the vessel and be removed by RWCU without being circulated through the core. Second, when level is at 80 inches there is more metal in contact with the naturally circulating reactor water. More metal exposed to the water will act as a ambient heat sink. Therefore more ambient losses will occur. BFN Tech. Specs include decay heat removal by ambient losses as an alternate cooling method to reduce or maintain temperatures.

Reference Tech. Spec. Bases 3.4.7 A.1,A.2, A.3 page B 3.4-46 (attached)

78. 295021AK2.01 001/ ROT1G3/ SROT1G2/ 3.6/3.7/ C/A/ MODIFIED/ BF00301/ BOTH/ 34

Unit 2 is in Cold Shutdown for a short mid-cycle outage, when a complete loss of Shutdown Cooling occurs. Plant conditions are as follows:

- Reactor Recirculation pumps are out of service
- Reactor recirculation suction temperature is 140 degrees and slowly decreasing
- Shutdown cooling flow cannot be re-established in a timely manner

The Shift Manager has directed that RPV level be adjusted.

Which one of the following is the appropriate action <u>and</u> the basis for this action?

A. Verify level is 60 inches to aid in heat removal by injecting cold water.

B. Verify level is 80 inches, to provide natural circulation cooling for the reactor.

C. Verify level is 60 inches, to increase core submergence thereby preventing or minimizing localized fuel channel boiling.

✓D. Verify level is 80 inches, to reduce stratification so that more representative temperatures can be obtained to assess bulk reactor coolant temperature.

REF: 2-AOI-74-1, Rev. 0021, LOSS OF SDC, pg 6
SOURCE: MODIFIED QUESTION
we would be at 70-90 inches modified choices to read verify vice raise JMP
JUSTIFICATION

a. 60 inches is not appropriate per the AOP, though there may be some cooling with stratification.
b. Though 80 inches facilitates natural circulation, there is not a heat sink that facilitates cooling during a short mid-cycle outage.
c. 60 is an old number, and it was for the purpose of obtaining better temperatures.
d. (Correct)

BASES

ACTIONS (continued)

A.1, A.2, and A.3

With one required RHR shutdown cooling subsystem inoperable for decay heat removal, the inoperable subsystem must be restored to OPERABLE status without delay. In this condition, the remaining OPERABLE subsystem can provide the necessary decay heat removal. The overall reliability is reduced, however, because a single failure in the OPERABLE subsystem could result in reduced RHR shutdown cooling capability. Therefore, an alternate method of decay heat removal must be provided.

With both required RHR shutdown cooling subsystems inoperable, an alternate method of decay heat removal must be provided in addition to that provided for the initial RHR shutdown cooling subsystem inoperability. This re-establishes backup decay heat removal capabilities, similar to the requirements of the LCO. The 1 hour Completion Time is based on the decay heat removal function and the probability of a loss of the available decay heat removal capabilities.

The required cooling capacity of the alternate method should be ensured by verifying (by calculation or demonstration) its capability to maintain or reduce temperature. Decay heat removal by ambient losses can be considered as, or contributing to, the alternate method capability. Alternate methods that can be used include (but are not limited to) the Condensate/Main Steam (feed and bleed) Systems and the adjacent unit(s) RHR SDC pumps and heat exchangers available through the RHR cross tie.

However, due to the potentially reduced reliability of the alternate methods of decay heat removal, it is also required to reduce the reactor coolant temperature to the point where MODE 4 is entered.

(continued)

RO and SRO Question # 57 (264000G2.1.32)

Delete question due to no correct answer

This is a modified BFN HLT exam bank question. The original is attached. The parameters given put the D/G at a power factor greater than 0.8. This is a more desirable condition to be in, however our procedures require a 0.8 power factor. There are no excessive stator or field currents in the conditions given by the question. In order to achieve a power factor of 0.8 one must either raise the voltage regulator setpoint by using the voltage regulator control switch or lower the KW output by using the D/G governor control switch. This would make "A" or "D" correct, however the last portion of these choices (excessive currents) makes "A" and "D" incorrect. "C" is incorrect because changing the governor control switch will not avoid excessive field currents and it will not get the D/G to the desired power factor. "B" is incorrect because it doesn't avoid excessive stator currents and it will not get the D/G to the desired power factor. In general the only thing that would effect field currents is the voltage regulator.

Reference 0-OI-82 page 58 and 85.
Original question OPL171.038 003

57. 264000G2.1.32 001/ ROT2G1/ SROT2G1/ 3.4/3.8/ C/A/ NEW/ BF00301/ BOTH/ 135

Diesel Generator 3A is synchronized to 4KV Shut Down Board 3A. The instrumentation readings for the diesel generator are as follows:

voltage: 4160 VAC
frequency = 59.8
current = 340 amps
vars = 1600 Kvars
watts = 2585 KW

What actions are required if the diesel is expected to be operated for an extended period?

A. The operator must take the voltage regulator control switch to raise to avoid excessive stator currents.

B. The operator must take the voltage regulator control switch to lower to avoid excessive stator currents.

✓C. The operator must take the governor control switch to raise to avoid excessive field current.

D. The operator must take the governor control switch to lower to avoid excessive field current.

REF: OI-82
OPL171.038 Rev. 9, page 31
Exam bank question OPL171.038 003
SOURCE: NEW QUESTION (MEE)
ATTACHMENT: Need 3-OI-82, Illustration 1 for exam.
JMP

8.1 Parallel with System Operation at Panel 9-23 (Continued)

8.1.9 USE the associated Diesel Generator voltage regulator control switch to match Diesel Generator and System voltages:

Diesel	Instrument Name	Instrument No.	Panel
A	DG A VOLT REGULATOR CONT	0-HS-82-A/2A	0-9-23-7
	GEN SYNC REF VOLTAGE	0-EI-82-AB	
	SYSTEM SYNC REF VOLTAGE	0-EI-211-AB	
B	DG B VOLT REGULATOR CONT	0-HS-82-B/2A	0-9-23-7
	GEN SYNC REF VOLTAGE	0-EI-82-AB	
	SYSTEM SYNC REF VOLTAGE	0-EI-211-AB	
C	DG C VOLT REGULATOR CONT	0-HS-82-C/2A	0-9-23-8
	GEN SYNC REF VOLTAGE	0-EI-82-CD	
	SYSTEM SYNC REF VOLTAGE	0-EI-211-CD	
D	DG D VOLT REGULATOR CONT	0-HS-82-D/2A	0-9-23-8
	GEN SYNC REF VOLTAGE	0-EI-82-CD	
	SYSTEM SYNC REF VOLTAGE	0-EI-211-CD	

8.1.10 **WHEN** the synchroscope needle is approximately 2 minutes on the left hand side of the 12 o'clock position, **THEN**

PLACE the associated Diesel Generator breaker handswitch in CLOSE:

Diesel	Handswitch Name	Handswitch No.	Panel
A	DG A BKR 1818	0-HS-211-A/22A	0-9-23-7
B	DG B BKR 1822	0-HS-211-B/4A	0-9-23-7
C	DG C BKR 1812	0-HS-211-C/4A	0-9-23-8
D	DG D BKR 1816	0-HS-211-D/20A	0-9-23-8

8.1.11 **PLACE** the associated Diesel Generator breaker synchronizing switch in OFF:

Diesel	Handswitch Name	Handswitch No.	Panel
A	DG A BKR 1818 SYNC	0-25-211-A/22A	0-9-23-7
B	DG B BKR 1822 SYNC	0-25-211-B/4A	0-9-23-7
C	DG C BKR 1812 SYNC	0-25-211-C/4A	0-9-23-8
D	DG D BKR 1816 SYNC	0-25-211-D/20A	0-9-23-8

NOTE:

Lagging VARS should be maintained when adjusting kW load (rising or lowering). This may require kW load adjustment to be stopped periodically to allow for adjusting kVAR load. Once desired kW load is achieved, Illustration 1 should be referred to for determination of kVAR loading required to obtain a power factor (pf) of 0.8 lagging. Diesel generator kVAR load should then be adjusted to obtain a 0.8 pf lagging. If system conditions will not permit the kVAR loading required to obtain a 0.8 pf lagging, kVAR load should be adjusted to the maximum kVAR lagging the system will allow.

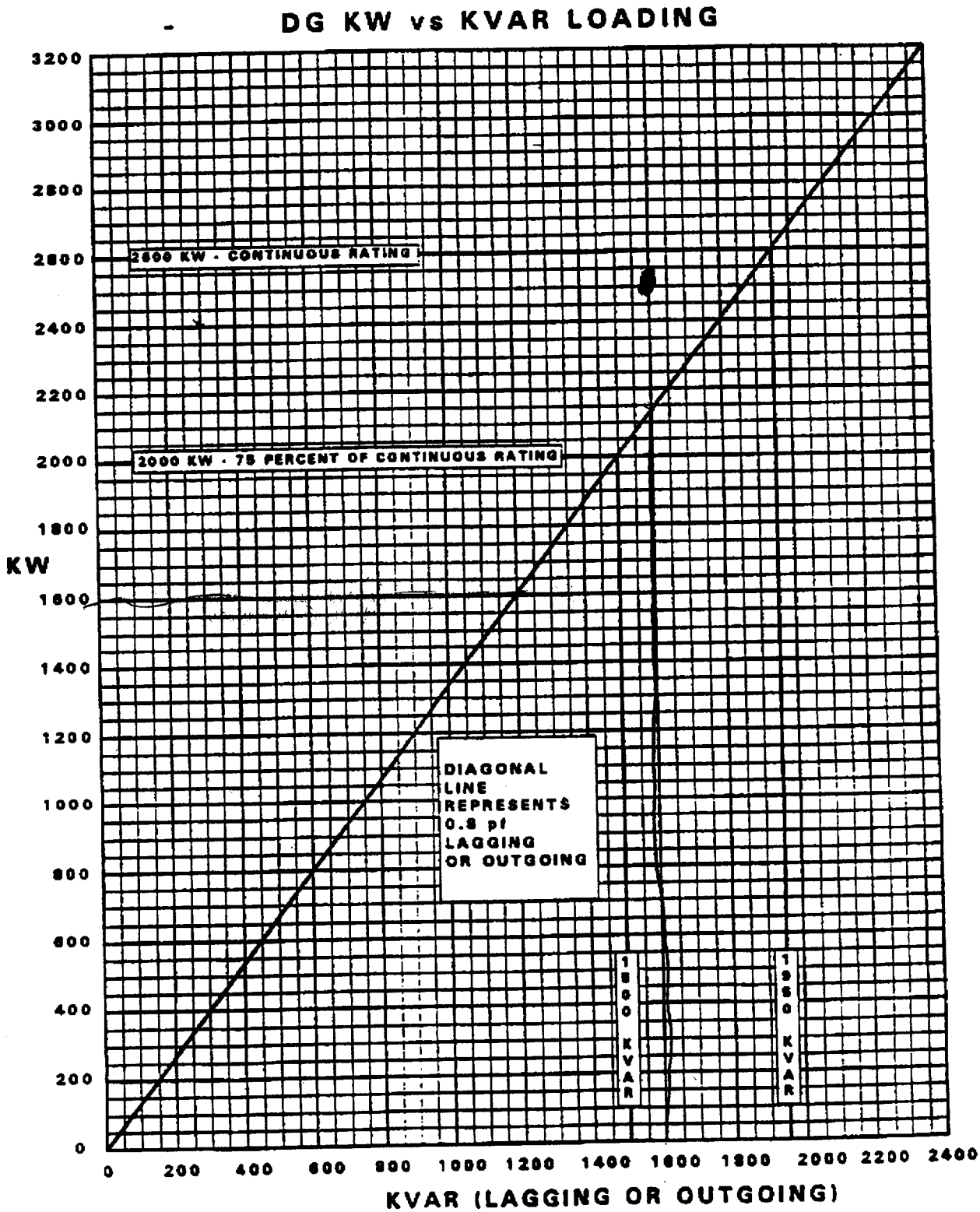
DG KW vs KVAR LOADING
KW
3200
3000
2800
2600
2400
2200
2000
1800
1600
1400
1200
1000
800
600
400
200
0
2600 KW - CONTINUOUS RATING
2000 KW - 75 PERCENT OF CONTINUOUS RATING
DIAGONAL LINE REPRESENTS 0.8 pf LAGGING OR OUTGOING
1560 KVAR
1950 KVAR
0
200
400
600
800
1000
1200
1400
1600
1800
2000
2200
2400
KVAR (LAGGING OR OUTGOING)

1. OPL171.038 003/ 2/ OI/ DG/ / U082NO01/ 10/ 3.5 /3./ YES

Diesel Generator "A" is synchronized to 4KV S/D Bd "A". The instrumentation readings for the diesel generator are as follows:

-voltage = 4160 VAC
-frequency = 60 Hz
-current = 340 amps
-vars = 2400 Kvars
-watts = 2600 Kw (Desired load)

Determine what actions ARE NEEDED to bring the diesel generator operating parameters into conformance with procedural requirements for CONTINUOUS OPERATION with a power factor of .8 lagging.(Attached Illustration 1 of OI 82 may be utilitized if desired)

A. Take the voltage regulator control switch to raise.

B. Take the voltage regulator control switch to lower.

C. Take the governor control switch to raise.

D. Take the governor control switch to lower.

Answer is B.

Old TEGRS Number (Deleted Bank)13455 Taskno: U-082-NO-01 Skills 264000A4.01 Knowledge RO3.5SRO3. Comment: O-OI-82 Ilustration 1 3.3/3.4

DIESEL GENERATOR OPERATING LOG

Date _____ Diesel Generator _____

Log all manipulations of Diesel Generator LOGIC BREAKER in the Narrative Log

STARTS/LOAD RUNS

Reason for Start: _____
(Test, Auto Start)
[3]Slow Starts/Load Runs ____/____
[3]Fast Starts/Load Runs ____/____
Time/Date Started: ____/____
Time/Date Loaded: ____/____
Time/Date Unloaded: ____/____
Time/Date Stopped: ____/____

OUT OF SERVICE TIME

Time/Date Removed From Service: ____/____
Reason Taken Out Of Service: _____
_____
Time/Date Returned To Service: ____/____
Comments/Explanation Of Failures: _____
_____
_____

Duty Technical Support Representative notified to obtain a copy of Illustration 2.

_____ _____
Tech Support (Copy obtained) UO

Readings are taken from Panel 9-23 or applicable Shutdown Board depending on D/G control location. Readings are initiated once every 15 minutes during the first hour of operation at rated speed and once every 30 minutes thereafter. Enter the actual time that each set of readings are initiated.

TIME									
Generator Frequency (59 - 61 HERTZ)[1]									
Generator Voltage[5] (3950 - 4400 VOLTS)									
Generator Watts[2,4] (520 - 2850 kW)									
Generator VARS[2,4] (400 - 2100 KVAR) (.8 pf lagging)									
Generator amps (less than 495 amps)									
INITIALS									

1 Only indicated if one of the associated 4KV shutdown board feeder breaker synchroscope switches is in the ON position. The synchroscope switch should only be placed in the ON position long enough to obtain a reading and then placed back in the OFF position.

2 The lower limit specified for Generator Watts and the limits specified for Generator VARS do not apply when the diesel generator is the only source of power to the shutdown board.

3 Number of each type of start/number of times load was applied either automatically or manually after each type of start.

4 The upper limits specified for Generator Watts and Vars shall be 2805 kW and 2200 kVAR during the DG 24 hour Run Surveillances.

5. This voltage is based on the diesel generator being loaded. For a diesel generator which is running unloaded the voltage should be 4250 to 4400 volts.

	NAME (print)	INITIALS	NAME (print)	INITIALS
Performed by:	_____	_____	_____	_____

Review by the US signifies that the Duty Tech Support Eng. has received the copy of Ill 2 and the original Ill 2 has been attached to the SR if the D/G was run to support an SR, otherwise place the original in the STA box.

Reviewed by: _____ _____
Unit Supervisor Date

DIESEL GENERATOR OPERATING LOG

Date _____ Initial ELAPSED TIME INDICATOR reading _____

Diesel Generator _____ Final ELAPSED TIME INDICATOR reading _____

Ensure all manipulations of Diesel Generator LOGIC BREAKER are logged in the Narrative Log

Readings are taken locally in Diesel Generator Room. Readings are initiated once every 15 minutes during the first hour of operation at rated speed and once every 30 minutes thereafter. Enter the actual time that each set of readings are initiated. If any readings are out of their specified range record reason and action taken in remarks.

TIME									
RPM (885-915)									
PRIMING FUEL PRESS (20-64 psig)									
NORMAL FUEL PRESS (20-64 psig)									
MAIN BEARINGS LUBE OIL PRESS (45-125 psig)									
LUBE OIL FILTER INLET PRESS (8-40 psig)									
ENGINE CLG WTR OUTLET TEMP (100-190°F)									
LO CLR CLG WTR OUTLET TEMP (100-190°F)									
LO CLR LUBE OIL OUTLET TEMP (100-190°F)									
Engine Lube Oil Level (-4-0 inches)(note 1)									
Governor Fuel Rack Position (.62 - 1.96)									
Governor Oil Level (Visible) (I)									
FUEL TANK LEVEL GAUGE (260-500 gallons)									
EXPANSION TANK WATER LEVEL LOW (L) - NORMAL (N) HIGH (H)									
INITIALS									

NOTE 1 Initiate corrective maintenance to restore lube oil level if it lowers to -2" at idle speed. Initiate corrective maintenance to restore lube oil level if it lowers to ≤-3" while the Diesel Generator is running.

REMARKS: _____

	NAME (print)	INITIALS
Performed by:	_____	_____
	_____	_____
	_____	_____
Reviewed by:	_____ Unit Supervisor	_____ Date

SRO Question # 9 (295017AA1.03)

Change the Correct answer to "B" verses "A"

This question was designed to test the operators knowledge of the lowest level detectable reading. The question should have read 1.5E-5 verses 1.5E5. This is a drastic increase in the activity of the release (E10). This value would cause BFN to exceed ODCM release rate limits and cause building release rate fraction to be greater than 0.9. This change in magnitude would require the operator to stop the release, thus making "B" the correct answer

Reference: 0-SI-4.8.B.1.a.1 step 7.8.6 and 7

9. 295017AA1.03 001/ / SROT1G1/ 3.4/3.4/ C/A/ NEW/ BF00301/ SRO/ 107

You are the Unit Supervisor on Unit 2. A chemistry technician taking routine samples reports that a sample from the roof vent monitored by RM-90-250 indicates there is a release of Xe133 from the roof of the reactor building. The sample had a total activity of 1.5E5 microcuries per cubic centimeter and no other gases or isotopes were detected.

Which one of the following states your required actions?

✓A. Direct the chemistry technician to continue routine monitoring.

B. Without delay, take appropriate actions to terminate the release.

C. Monitor the release and prepare to notify the NRC pursuant to 10 CFR 50.73.

D. Terminate the release within one hour and initiate a Special Report pursuant to the ODCM.

REF: ODCM, Rev. 10, Section 1/2.2
OPL171.033, Rev. 7
SOURCE: NEW QUESTION
help is this expected operator knowledge or a lookup
JUSTIFICATION
a. (Correct)
b. No action required. The objective was to confirm the candidate's knowledge that the reading was just about LLD for the RM.
c. Not a reportable release level.
d. No need to terminate the release, nor is it reportable by special report.

10. 295023AA1.05 001/ / SROT1G1/ 2.8/3.5/ MEMORY/ MODIFIED/ BF00301/ SRO/ 151

Fuel loading is in progress on Unit 2. A bundle is in transport from the SFSP to the core, when the fire alarm sounds. Which one of the following describes the correct actions to be taken?

A. Stop all fuel movement until determination of the fire's impact on refueling operations can be made.

B. Immediately lower the bundle to the closest location in the core and wait for determination of the fire's impact on refueling operations can be made.

✓C. Refueling SRO will monitor the Fire/Medical radio frequency and discontinue fuel movement only if the fire could adversely affect refueling.

D. Fire brigade team leader will determine if refueling operations could be adversely affected and direct the refueling SRO to discontinue fuel movement if necessary.

REF: OPL171.060, Rev. 9, Page 17
SOURCE: MODIFIED BANK QUESTION OPL171.060 005
lookup

7.8 (Continued)

7.8.5 **SUM** the three unit total release rates and the 0-RM-90-252 actual rate. **RECORD** the building ventilation release rate on Page 4 of Attachment 4.

NOTE:

For reporting purposes, the release fraction should only be recorded to three decimal places. For examples:

1. A release fraction of 0.12345 should be recorded as 0.123.

2. A release fraction of 0.00012 should be recorded as 0.000.

7.8.6 **DETERMINE** the building ventilation release fraction by dividing the total building ventilation release rate by 1.50 E+05 (or 150,000) µCi/sec. **RECORD** the fraction on both Attachment 2 and Attachment 4.

7.8.7 **VERIFY** the acceptance criteria as given in Step 6.2.1 has been met. The building ventilation release fraction must be less than or equal to 0.90. If the acceptance criteria has failed, immediately **CONTACT** the Unit Supervisors. (AC)

7.9 **DETERMINE** the elevated (stack) noble gas release rate once per shift by completing the following steps:

7.9.1 **RECORD** the highest noble gas count rates (counts per second, cps) for the 0-RM-90-147 and 0-RM-90-148 monitors in the appropriate columns of Attachment 6 in accordance with one of the following steps:

7.9.1.1 If both the 0-RR-90-147 and at least one of the radiation monitors are operable, **OBTAIN** the necessary information from 0-RR-90-147 on Panel 9-2. If applicable, **RECORD** "OOS" in the appropriate column of Attachment 6 if one of the monitors is out of service.

Building Effluent Release Rate Log - Unit 0

Week From_____ To_____

DAY	SHIFT	Radwaste Building 0-RM-90-252 [001]			Unit Total Release Rates (µCi/sec)			Building Ventilation Release Rate (µCi/sec) (7.8.5)	Building Ventilation release Fraction (7.8.6)	Acceptance Criteria	Initials	
		Release Rate (µCi/sec) (7.8.1)	Release Factor (7.8.2)	Actual Rate (µCi/sec) (7.8.3)	Unit 1 (7.8.4)	Unit 2 (7.8.4)	Unit 3 (7.8.4)				AUO	Unit Super-visor
FRI	D									≤ 0.90		
	N									≤ 0.90		
SAT	D									≤ 0.90		
	N									≤ 0.90		
SUN	D									≤ 0.90		
	N									≤ 0.90		
MON	D									≤ 0.90		
	N									≤ 0.90		
TUE	D									≤ 0.90		
	N									≤ 0.90		
WED	D									≤ 0.90		
	N									≤ 0.90		
THU	D									≤ 0.90		
	N									≤ 0.90		

Building Effluent Release Rate Log - Unit 2

Week From_____ **To**_____

Unit 2

DAY	SHIFT	Reactor Building 2-RM-90-250 [010]			Turbine Building 2-RM-90-249 [003]			Turbine Building 2-RM-90-251 [006]			Initials	
		Release Rate (µCi/sec) (7.8.1)	Release Factor (7.8.2)	Actual Rate (µCi/sec) (7.8.3)	Release Rate (µCi/sec) (7.8.1)	Release Factor (7.8.2)	Actual Rate (µCi/sec) (7.8.3)	Release Rate (µCi/sec) (7.8.1)	Release Factor (7.8.2)	Actual Rate (µCi/sec) (7.8.3)	AUO	Unit Super-visor
FRI	D											
	N											
SAT	D											
	N											
SUN	D											
	N											
MON	D											
	N											
TUE	D											
	N											
WED	D											
	N											
THU	D											
	N											

Building Ventilation System Release Factors

1-, 2-, and 3- RM-90-250					
Fan Status (Note 1)			Release Factor		
Refuel	Reactor	Turbine	Unit 1	Unit 2	Unit 3
Off	Off	Off	0.00	0.00	0.00
Slow	Slow	Slow	0.49	0.53	0.49
Fast	Slow	Slow	0.63	0.60	0.59
Slow	Fast	Slow	0.64	0.73	0.69
Slow	Slow	Fast	0.72	0.73	0.71
Fast	Fast	Slow	0.77	0.80	0.78
Fast	Slow	Fast	0.86	0.80	0.81
Slow	Fast	Fast	0.87	0.94	0.91
Fast	Fast	Fast	1.00	1.00	1.00

0-RM-90-252			
Number Fans On	0	1	2 Fans
Release Factor	0.00	0.62	1.00

1-RM-90-249, 2-RM-90-249, and 3-RM-90-251					
Number Fans On	0	1	2	3	4
Release Factor	0.00	0.25	0.50	0.75	1.00

1-RM-90-251, 2-RM-90-251, and 3-RM-90-249						
Number Fans On	0	1	2	3	4	5
Release Factor	0.00	0.20	0.40	0.60	0.80	1.00

NOTE 1:

If one or more of the fans are off and one or more of the fans are on, assume off fans are on "slow". (This will cover the case where the fans are off, off, slow; off, slow, off; etc.)

Table 2.1-2 (Page 2 of 2)
RADIOACTIVE GASEOUS EFFLUENT MONITORING INSTRUMENTATION
SURVEILLANCE REQUIREMENTS

NOTE: Each requirement shall be performed within the specified time interval with a maximum allowable extension not to exceed 25% of the interval given.

1 The CHANNEL CALIBRATION shall include the use of a known (traceable to the National Institute of Standards and Technology (NIST)) radioactive source(s) positioned in a reproducible geometry with respect to the sensor or using standards that have been obtained from suppliers that participate in measurement assurance activities with the NIST.

2 The CHANNEL FUNCTIONAL TEST shall also demonstrate that control room alarm annunciation occurs if any of the following conditions exists:

1. Instrument indicates measured levels above the alarm/trip setpoint.

2. Instrument indicates an inoperative/downscale failure.

3. Instrument controls not set in operate mode (stack only).

3 The CHANNEL FUNCTIONAL TEST shall demonstrate that automatic isolation of this pathway and control room alarm annunciation occurs if any of the following conditions exists:

1. Instrument indicates measured levels above the alarm/trip setpoint.

2. Instrument indicates an inoperative/downscale failure.

3. Instrument controls not set in operate mode (stack only).

The two channels are arranged in a coincidence logic such that 2 upscale, or 1 downscale and 1 upscale or 2 downscale will isolate the offgas line.

4 The noble gas monitor shall have a LLD of 1E-5 µCi/cc (Xe-133 Equivalent).

5 The noble gas monitor shall have a LLD of 1E-6 µCi/cc (Xe-133 Equivalent).

RADIOACTIVITY RELEASES 4.0

NOTES:

NOTE 4.1-U Prior to making this emergency classification based upon the WRGERMS indication, assess the release by either of the following:
1. Actual field measurements exceed the limits in Table 4.1-U
2. SI 4.8.B.1.a.1 Release Fraction exceeds 2.0

If neither assessment can be conducted within 60 minutes then the declaration must be made on the valid WRGERMS reading.

NOTE 4.1-A Prior to making this emergency classification based upon the WRGERMS indication, assess the release by either of the following:
1. Actual field measurements exceed the limits in Table 4.1-A
2. SI 4.8.B.1.a.1 Release Fraction exceeds 200

If neither assessment can be conducted within 15 minutes then the declaration must be made on the valid WRGERMS reading.

NOTE 4.1-S Prior to making this emergency classification based upon the Gaseous Release Rate indication, assess the release by either of the following methods:
1. Actual field measurements exceed the limits in Table 4.1-S.
2. Projected or Actual Dose Assessments exceed 100 mrem TEDE or 500 mrem CDE.

If neither assessment can be conducted within 15 minutes then the declaration must be made based on the valid WRGERMS reading.

NOTE 4.1-G Prior to making this emergency classification based upon the Gaseous Release Rate indication, assess the release by either of the following methods:
1. Actual field measurements exceed the limits in Table 4.1-G.
2. Projected or Actual Dose Assessments exceed 1000 mrem TEDE or 5000 mrem CDE.

If neither assessment can be conducted within 15 minutes then the declaration must be made based on the valid WRGERMS reading.

CURVES/TABLES:

Table 4.1-U
RELEASE LIMITS FOR UNUSUAL EVENT

TYPE	MONITORING METHOD	LIMIT	DURATION
GASEOUS RELEASE RATE	STACK NOBLE GAS (WRGERMS)	2.88×10^{7} µCi/sec	1 HOUR
GASEOUS RELEASE RATE	SI 4.8.B.1.a.1	RELEASE FRACTION 2.0	1 HOUR
SITE BOUNDARY RADIATION READING	FIELD ASSESSMENT TEAM	0.10 MREM HR $\gamma - \beta$	1 HOUR

Table 4.1-A
RELEASE LIMITS FOR ALERT

TYPE	MONITORING METHOD	LIMIT	DURATION
GASEOUS RELEASE RATE	STACK NOBLE GAS (WRGERMS)	2.88×10^{9} µCi sec	15 MINUTES
GASEOUS RELEASE RATE	SI 4.8.B.1.a.1	RELEASE FRACTION 200	15 MINUTES
SITE BOUNDARY RADIATION READING	FIELD ASSESSMENT TEAM	10 MREM HR $\gamma - \beta$	15 MINUTES

Table 4.1-S
RELEASE LIMITS FOR SITE AREA EMERGENCY

TYPE	MONITORING METHOD	LIMIT	DURATION
GASEOUS RELEASE RATE	STACK NOBLE GAS (WRGERMS)	1.3×10^{10} µCi sec	15 MINUTES
SITE BOUNDARY RADIATION READING	FIELD ASSESSMENT TEAM	100 MREM HR $\gamma - \beta$	1 HOUR
SITE BOUNDARY IODINE-131	FIELD ASSESSMENT TEAM	3.9×10^{-9} µCI cm^{3}	1 HOUR

Table 4.1-G
RELEASE LIMITS FOR GENERAL EMERGENCY

TYPE	MONITORING METHOD	LIMIT	DURATION
GASEOUS RELEASE RATE	STACK NOBLE GAS (WRGERMS)	1.3×10^{11} µCi sec	15 MINUTES
SITE BOUNDARY RADIATION READING	FIELD ASSESSMENT TEAM	1000 MREM HR $\gamma - \beta$	1 HOUR
SITE BOUNDARY IODINE-131	FIELD ASSESSMENT TEAM	3.9×10^{-8} µCI cm^{3}	1 HOUR

LIQUID EFFLUENT		
DESCRIPTION	DESCRIPTION	
4.3-U Liquid release rate exceeds 20 times ECL as determined by chemistry sample **AND** Release duration exceeds or will exceed 60 minutes. OPERATING CONDITION: - All		UNUSUAL EVENT
4.3-A Liquid release rate exceeds 2000 times ECL as determined by chemistry sample **AND** Release duration exceeds or will exceed 15 minutes. OPERATING CONDITION: - All		ALERT
		SITE EMERGENCY
		GENERAL EMERGENCY

THIS PAGE INTENTIONALLY BLANK

GASEOUS EFFLUENT	MAIN STEAM LINE BREAK	
DESCRIPTION	DESCRIPTION	
4.1-U T N Gaseous release exceeds ANY limit and duration in Table 4.1-U. OPERATING CONDITION: - All	**4.2-U** Main Steam Line break outside Primary Containment with isolation. OPERATING CONDITION: - Mode 1 - Mode 3 - Mode 2	UNUSUAL EVENT
4.1-A T N Gaseous release exceeds ANY limit and duration in Table 4.1-A. OPERATING CONDITION: - All		ALERT
4.1-S T N EITHER of the following conditions exists: • Gaseous release exceeds or is expected to exceed ANY limit and duration in Table 4.1-S. • Dose assessment indicates actual or projected dose consequences above 100 mrem TEDE or 500 mrem thyroid CDE. OPERATING CONDITION: - All	**4.2-S** Unisolable Main Steam Line break outside Primary Containment. OPERATING CONDITION: - Mode 1 - Mode 3 - Mode 2	SITE EMERGENCY
4.1-G T N EITHER of the following conditions exists: • Gaseous release exceeds or is expected to exceed ANY limit and duration in Table 4.1-G. • Dose assessment indicates actual or projected dose consequences above 1000 mrem TEDE or 5000 mrem thyroid CDE. OPERATING CONDITION: - All	—	GENERAL EMERGENCY

NOTES:

CURVES/TABLES: