DRAFT DISCLAIMER

This contractor document was prepared for the U.S. Department of Energy (DOE), but has not undergone programmatic, policy, or publication review, and is provided for information only. The document provides preliminary information that may change based on new information or analysis, and is not intended for publication or wide distribution; it is a lower level contractor document that may or may not directly contribute to a published DOE report. Although this document has undergone technical reviews at the contractor organization, it has not undergone a DOE policy review. Therefore, the views and opinions of authors expressed do not necessarily state or reflect those of the DOE. However, in the interest of the rapid transfer of information, we are providing this document for your information, per your request.

UM-11
NM3507

MOL.20000317.0446

QA: N/A

Civilian Radioactive Waste Management System
Management & Operating Contractor

Update to the EIS Engineering File for the Waste Package in Support of the Final EIS

TDR-EBS-MD-000010 REV 00 ICN 01

March 2000

Prepared for:

U.S. Department of Energy
Yucca Mountain Site Characterization Office
P.O. Box 30307
North Las Vegas, Nevada 89036-0307

Prepared by:

TRW Environmental Safety Systems Inc.
1211 Town Center Drive
Las Vegas, Nevada 89144-6352

Under Contract Number
DE-AC08-91RW00134

DISCLAIMER

This report was prepared as an account of work sponsored by an agency of the United States Government. Neither the United States Government nor any agency thereof, nor any of their employees, nor any of their contractors, subcontractors or their employees, makes any warranty, express or implied, or assumes any legal liability or responsibility for the accuracy, completeness, or any third party's use or the results of such use of any information, apparatus, product, or process disclosed, or represents that its use would not infringe privately owned rights. Reference herein to any specific commercial product, process, or service by trade name, trademark, manufacturer, or otherwise, does not necessarily constitute or imply its endorsement, recommendation, or favoring by the United States Government or any agency thereof or its contractors or subcontractors. The views and opinions of authors expressed herein do not necessarily state or reflect those of the United States Government or any agency thereof.

Civilian Radioactive Waste Management System
Management & Operating Contractor

Update to the EIS Engineering File for the Waste Package in Support of the Final EIS

TDR-EBS-MD-000010 REV 00 ICN 01

March 2000

Prepared by:

Rochelle Rucinski
R.E. Rucinski
Waste Package Department

3-9-00
Date

Checked by:

Mark C Knapp
M.C. Knapp
Waste Package Department

3/10/00
Date

Approved by:

Hugh A. Benton
H.A. Benton
Manager, Waste Package Department

3/10/00
Date

REVISION RECORD

Revision Number	Interim Change No.	Date	Description of Change
REV 00		Initial issue.	This document is a supplement to the current *Waste Package Final Update to EIS Engineering File* (BBA000000-01717-5705-00019 REV 01). This document provides essentially parallel information for the Site Recommendation design (Enhanced Design Alternative II waste package design, drip shield, and emplacement pallet) to support the Final Environmental Impact Statement. Due to the amount of changes needed to update the information to reflect the Site Recommendation design, change bars were not used.
REV 00	ICN 01	March 2000	This document updated and corrected references. Sidebars were used to indicate changes within the document and Attachment I. References cited on the sketches (Attachment II) were removed as they were not used in the development of this document. These changes were not indicated on the sketches by a sidebar. In all cases, changes were entirely editorial in nature and did not affect the technical content of this document in any way.

INTENTIONALLY LEFT BLANK

EXECUTIVE SUMMARY

The purpose of this *Update to the EIS Engineering File for the Waste Package in Support of the Final EIS* is to provide the Department of Energy's (DOE) Environmental Impact Statement (EIS) Contractor with supplemental Engineered Barrier Segment (EBS) and Waste Package (WP) estimates for the Site Recommendation (SR) design. The SR design is based primarily on Enhanced Design Alternative (EDA) II. The DOE EIS Contractor has requested that the *Waste Package Final Update to EIS Engineering File* (Civilian Radioactive Waste Management System Management and Operating Contractor [CRWMS M&O] 1999a) be retained in its present form as a reference and the SR information be provided as a supplement. Information not impacted by the SR design contained in the former Engineering File (EF), *Waste Package Final Update to EIS Engineering File*, is not repeated in this supplement.

Some of the information in this document has been gathered from documents that reflect design concepts, as the EIS EF information is required before completion of the design analysis. Basing the EIS on a conceptual design is considered to be an acceptable industry practice.

This document provides information based on the SR design and includes areal mass loading for EDA II, provides the emplacement pallet design, provides the WP design including WP physical dimensions, and cost estimates for the respective WP designs, drip shield, and emplacement pallets. (Note that the support assemblies in the VA design are referred to as the emplacement pallets in the SR design because it is used to emplace the WPs in the emplacement drift.) It provides information on the fabrication of the WP, drip shield, and emplacement pallet for the SR design. It also provides new estimates for the number of WPs and associated total material mass usage, provides estimates for the number of drip shields and associated total material mass usage, provides new estimates for the number of emplacement pallets and associated total material mass usage, and provides new figures to illustrate the SR design.

INTENTIONALLY LEFT BLANK

CONTENTS

Page

EXECUTIVE SUMMARY vii

ACRONYMS xvii

1. INTRODUCTION 1-1
   1.1 OBJECTIVE 1-1
   1.2 SCOPE 1-1
   1.3 QUALITY ASSURANCE 1-3
   1.4 MONITORED GEOLOGIC REPOSITORY FUNCTIONS 1-3
   1.5 ENGINEERED BARRIER SEGMENT/WASTE PACKAGE ACTIVITY PERIODS 1-4
   1.6 WASTE PACKAGE DESIGN DECISIONS AND EVOLUTION 1-5
      1.6.1 Change to Drift Emplacement of Robust Waste Package from Borehole Emplacement of Thin Wall Stainless Steel Waste Package 1-6
      1.6.2 Change to Disposal of Mostly Canistered Spent Nuclear Fuel 1-6
      1.6.3 Change to Disposal of Mostly Uncanistered Spent Nuclear Fuel 1-6

2. INPUTS 2-1
   2.1 REGULATIONS, CODES, AND STANDARDS 2-1
      2.1.1 Waste Package Design–Site Recommendation 2-1
      2.1.2 Engineered Barrier Segment Major Component Characteristics and Requirements 2-1
      2.1.3 Criticality Protection 2-2
      2.1.4 Handling 2-2
   2.2 PROGRAM/PROJECT DESIGN REQUIREMENTS/ASSUMPTIONS 2-2
      2.2.1 Waste Package Requirements 2-2
      2.2.2 Waste Package Containment Barrier Shield 2-3
      2.2.3 Rock, Drift Wall, and Surface Temperature 2-3
      2.2.4 Waste Package Performance 2-3
      2.2.5 Criticality Control Period 2-4

3. ENVIRONMENTAL IMPACT STATEMENT CONCEPT ALTERNATIVES, OPTIONS, AND MODULES 3-1
   3.1 AREAL MASS LOADING ALTERNATIVES 3-1
   3.2 WASTE FORM OPTIONS 3-1
   3.3 TRANSPORTATION OPTIONS 3-1
   3.4 INVENTORY MODULES 3-1
   3.5 EMPLACEMENT PALLET POSITIONING VARIATIONS 3-1

4. REFERENCE DESIGN DESCRIPTION 4-1
   4.1 ENGINEERED BARRIER SEGMENT/WASTE PACKAGE FUNCTIONS 4-1
      4.1.1 Waste Package 4-1

CONTENTS (Continued)

Page

4.1.2 Waste Package Emplacement Pallet 4-1
4.1.3 Drip Shield 4-1
4.2 ENGINEERED BARRIER SEGMENT/WASTE PACKAGE DESCRIPTIONS 4-1
4.2.1 Multi-Layer Waste Package 4-1
4.2.2 Waste Package Material Selection 4-4
4.2.2.1 Waste Package Containment Barrier Materials 4-4
4.2.2.2 Waste Package Internal Components 4-4
4.2.2.3 Drip Shield 4-6
4.2.3 Criticality Analysis and Control 4-6
4.2.3.1 Design Bases 4-7
4.2.3.2 Design Evaluations 4-7
4.2.3.3 Conclusions 4-10
4.2.4 Waste Package Thermal Loading 4-10
4.2.5 Radiation Levels 4-11
4.2.6 Emplacement Pallet 4-11
4.2.6.1 Waste Package Support 4-12
4.2.6.2 Waste Package Pier 4-12
4.2.6.3 Alternate Design Concept 4-12
4.2.7 Drip Shield 4-12
4.3 WASTE PACKAGE DESIGNS 4-13
4.3.1 21 PWR No Neutron Absorber–Viability Assessment Design 4-13
4.3.2 21 PWR Absorber Plate–Site Recommendation Design 4-14
4.3.3 21 PWR Control Rods–Site Recommendation Design 4-14
4.3.4 12 PWR No Neutron Absorber–Viability Assessment Design 4-14
4.3.5 12 PWR Absorber Plate–Site Recommendation Design 4-14
4.3.6 44 BWR No Neutron Absorber–Viability Assessment Design 4-15
4.3.7 44 BWR Absorber Plate–Site Recommendation Design 4-15
4.3.8 24 BWR Thick Absorber Plate–Site Recommendation Design 4-15
4.3.9 24 BWR Canistered Fuel–Viability Assessment Design 4-16
4.3.10 44 BWR Canistered Fuel–Viability Assessment Design 4-16
4.3.11 5 DHLW/DOE SNF–Site Recommendation Design 4-16
4.3.12 5 DHLW/DOE SNF–Long–Site Recommendation Design 4-16
4.3.13 Naval SNF Long–Site Recommendation Design 4-16
4.3.14 Large (125-Ton) Canistered Fuel (21 PWR/40 BWR)–Viability Assessment Design 4-17
4.3.15 Small (75-Ton) Canistered Fuel (12 PWR/24 BWR)–Viability Assessment Design 4-17
4.3.16 DOE Miscellaneous 4-17
4.3.17 Naval SNF–Site Recommendation Design 4-17
4.3.18 2 MCO/2 DHLW–Site Recommendation Design 4-17

5. IMPACTS OF ALTERNATIVES, OPTIONS, AND MODULES 5-1

CONTENTS (Continued)

Page

5.1 WASTE FORM/TRANSPORTATION OPTIONS 5-1
5.2 DOE-OWNED WASTE FORMS 5-1
5.3 ENGINEERED BARRIER SEGMENT/WASTE PACKAGE EVALUATION CASES 5-1
5.4 AREAL MASS LOADING 5-1
5.5 WASTE PACKAGE EMPLACEMENT PALLET EVALUATION CASES 5-1

6. ENVIRONMENTAL INFORMATION 6-1
6.1 ENGINEERED BARRIER SEGMENT/WASTE PACKAGE PROCUREMENT AND FABRICATION 6-1
6.1.1 Disposal Container Fabrication and Closure 6-1
6.1.2 Emplacement Pallet 6-4
6.1.3 Drip Shield 6-4
6.2 ENGINEERED BARRIER SEGMENT/WASTE PACKAGE MATERIAL AND QUANTITIES 6-5
6.2.1 Waste Package Estimates for Base Case–Site Recommendation Design 6-6
6.2.2 Waste Package Estimates for Inventory Module 1–Site Recommendation Design 6-7
6.2.3 Waste Package Estimates for Inventory Module 2–Site Recommendation Design 6-10
6.2.4 Emplacement Pallet Estimates–Site Recommendation Design 6-12
6.2.4.1 Emplacement Pallet Estimates for Base Case–Site Recommendation Design 6-12
6.2.4.2 Emplacement Pallet Estimates for Inventory Module 1–Site Recommendation Design 6-13
6.2.4.3 Emplacement Pallet Estimates for Inventory Module 2–Site Recommendation Design 6-13
6.2.5 Drip Shield Estimates–Site Recommendation Design 6-14
6.2.5.1 Drip Shield Estimates for Base Case–Site Recommendation Design 6-14
6.2.5.2 Drip Shield Estimates for Inventory Module 1–Site Recommendation Design 6-15
6.2.5.3 Drip Shield Estimates for Inventory Module 2–Site Recommendation Design 6-15
6.3 ENGINEERED BARRIER SEGMENT/WASTE PACKAGE NORMAL OPERATIONS 6-16
6.3.1 Normal Waste Package Handling Loads 6-16
6.4 ENGINEERED BARRIER SEGMENT/WASTE PACKAGE DESIGN-BASIS EVENTS 6-17
6.4.1 Waste Package Design-Basis Events 6-17
6.4.2 Emplacement Pallet Design-Basis Events 6-17
6.4.3 Drip Shield Design-Basis Events 6-17

CONTENTS (Continued)

Page

6.5 ENGINEERED BARRIER SEGMENT/WASTE PACKAGE MONITORING PERIOD 6-17
6.6 ENGINEERED BARRIER SEGMENT/WASTE PACKAGE SUBSTANTIALLY COMPLETE CONTAINMENT PERIOD 6-17
6.7 ENGINEERED BARRIER SEGMENT/WASTE PACKAGE WASTE ISOLATION PERIOD 6-18

7. REFERENCES 7-1
7.1 DOCUMENTS CITED 7-1
7.2 CODES, STANDARDS, REGULATIONS, AND PROCEDURES 7-3

ATTACHMENT I I-1

ATTACHMENT II II-1

FIGURES

Page

Figure 1-1. Engineered Barrier System 1-2

Figure 4-1. 21 PWR Absorber Plate–Site Recommendation Design 4-3

Figure 4-2. Drip Shield 4-6

Figure 4-3. Emplacement Pallet 4-12

INTENTIONALLY LEFT BLANK

TABLES

Page

Table 4-1. Cost Estimating Details–Commercial Spent Nuclear Fuel–Site Recommendation Design 4-18

Table 4-2. Cost Estimating Details–DOE-Owned Waste Forms–Site Recommendation Design 4-18

Table 4-3. Cost Estimating Details–Emplacement Pallet –Site Recommendation Design 4-19

Table 4-4. Cost Estimating Details–Drip Shield–Site Recommendation Design 4-19

Table 6-1. Commercial Spent Nuclear Fuel Waste Package Quantities–Base Case–Site Recommendation Design 6-5

Table 6-2. DOE-Owned Waste Forms Waste Package Quantities–Base Case–Immobilized Plutonium (18 MTHM)–Site Recommendation Design 6-6

Table 6-3. Total Material Mass Used in Waste Packages–Base Case–Site Recommendation Design 6-6

Table 6-4. Total Estimated Cost (1998 $) of Waste Packages–Base Case–Site Recommendation Design 6-6

Table 6-5. Commercial Spent Nuclear Fuel Waste Package Quantities Inventory Module 1–Site Recommendation Design 6-7

Table 6-6. DOE-Owned Waste Form Waste Package Quantities–Inventory Module 1–Site Recommendation Design 6-8

Table 6-7. Total Material Mass Used in Waste Packages–Inventory Module 1–Immobilized Plutonium (50 MTHM)–Site Recommendation Design 6-8

Table 6-8. Total Material Mass Used in Waste Packages–Inventory Module 1–Immobilized Plutonium (18 MTHM)–Site Recommendation Design 6-9

Table 6-9. Total Estimated Cost (1998 $) of Waste Packages–Inventory Module 1–Site Recommendation Design 6-9

Table 6-10. Total Material Mass Used in Waste Packages–Inventory Module 2 –Immobilized Plutonium (50 MTHM)–Site Recommendation Design 6-10

Table 6-11. Total Material Mass Used in Waste Packages–Inventory Module 2–Immobilized Plutonium (18 MTHM)–Site Recommendation Design 6-11

TABLES (Continued)

Page

Table 6-12. Total Estimated Cost (1998 $) of Waste Packages–Inventory Module 2–Site Recommendation Design 6-11

Table 6-13. Emplacement Pallet Quantities, Material Usage, and Cost–One Emplacement Pallet for Each Waste Package–Base Case–Site Recommendation Design 6-12

Table 6-14. Emplacement Pallet Quantities, Material Usage and Cost–One Emplacement Pallet for Each Waste Package–Inventory Module 1–Site Recommendation Design 6-13

Table 6-15. Emplacement Pallet Quantities, Material Usage, and Cost–One Emplacement Pallet for Each Waste Package–Inventory Module 2–Site Recommendation Design 6-13

Table 6-16. Total Estimated Waste Package Emplacement Length–Base Case–Site Recommendation Design 6-14

Table 6-17. Drip Shield Quantities, Material Usage, and Cost–Base Case–Site Recommendation Design 6-14

Table 6-18. Total Estimated Waste Package Emplacement Length–Inventory Module 1–Site Recommendation Design 6-15

Table 6-19. Drip Shield Quantities, Material Usage, and Cost–Inventory Module 1–Site Recommendation Design 6-15

Table 6-20. Total Estimated Waste Package Emplacement Length–Inventory Module 2–Site Recommendation Design 6-16

Table 6-21. Drip Shield Quantities, Material Usage, and Cost–Inventory Module 2–Site Recommendation Design 6-16

ACRONYMS

The following acronyms and abbreviations are used in this supplement for the SR design:

ASME	American Society of Mechanical Engineers
ASTM	American Society for Testing and Materials
BWR	Boiling Water Reactor
CFR	Code of Federal Regulations
CRWMS	Civilian Radioactive Waste Management System
CSNF	Commercial Spent Nuclear Fuel
DBE	Design-Basis Event
DC	Disposal Container
DHLW	Defense High-Level Waste
DISPC	Disposable Canister
DOE	Department of Energy
DPC	Dual-Purpose Canister
EBS	Engineered Barrier Segment
EBS/WP	Engineered Barrier Segment/Waste Package
EDA	Enhanced Design Alternative
EF	Engineering File
EIS	Environmental Impact Statement
GTCC	Greater Than Class C
M&O	Management and Operating Contractor
MCO	Multi-Canister Overpack
MGR	Monitored Geologic Repository
MOX	Mixed Oxide
MTHM	Metric Tons Heavy Metal
NDE	Nondestructive Examination
NG	Nuclear Grade
NRC	Nuclear Regulatory Commission
PT	Liquid Penetrant Testing
PWR	Pressurized Water Reactor
RT	Radiographic Testing
SCC	Substantially Complete Containment
SNF	Spent Nuclear Fuel
SPAR	Special Performance Assessment Required

SR	Site Recommendation
UCF	Uncanistered Fuel, or "Bare" Fuel
UT	Ultrasonic Testing
VA	Viability Assessment
WP	Waste Package
YMP	Yucca Mountain Project

1. INTRODUCTION

1.1 OBJECTIVE

The objective of this supplement is to provide a description of the EBS/WP Subsystem design concepts, EBS/WP interfaces with the Monitored Geologic Repository (MGR) Surface and Subsurface facilities, and EBS/WP material usage and cost estimates for the SR design. The design discussed is based on the EDA II design presented in the *License Application Design Selection Report* (CRWMS M&O 1999b). The information in this EF supplement will be used by the DOE contractor in the preparation of the EIS for the potential repository at Yucca Mountain. Some of the information in this supplement has been gathered from documents that reflect design concepts, as the EIS EF information is required before completion of the design analysis.

Information not impacted by the SR design in the former EBS/WP EF based on the Viability Assessment (VA) design is not repeated in this EF. A glossary is included as Attachment I.

1.2 SCOPE

The scope of this EF is limited to the EBS/WP, which includes WPs for commercial spent nuclear fuel (CSNF), canistered spent nuclear fuel (SNF), canistered defense high-level waste (DHLW), canistered DOE-owned, and other DOE-owned waste forms. The WP designs include their closure lids and, if needed, baskets (or internals). The EBS/WP Subsystem also includes the emplacement pallet and the drip shield. Emplacement drift backfill is a SR design option and may be placed on the drip shield at time of repository closure. However, it is not within the scope of this EF. A sketch to illustrate the EBS is provided as Figure 1-1. Additional EFs that support the EIS are being developed by the Surface Design and Subsurface Design organizations.

This document provides information on the Base Case inventory module as well as two additional optional inventory modules on an incremental basis. Under the **Base Case**, the repository would receive and dispose of a total of 70,000 metric tons heavy metal (MTHM) of waste. The inventory would include: 63,000 MTHM of CSNF, 8315 canisters (4,667 MTHM) of DHLW, and 2,333 MTHM of DOE-owned SNF (DOE 1999, p. A-1). **Inventory Module 1** would expand the Base Case such that the repository would receive and dispose of all CSNF (high-case projection 105,414 MTHM total), all of the DHLW (approximately 22,147 canisters if 18 MTHM of immobilized plutonium is included or approximately 22,280 canisters if all 50 MTHM of immobilized plutonium is included), and all of the DOE-owned (2,500 MTHM) (DOE 1999, pp. A-16, A-24, and A-37). **Inventory Module 2** would expand the repository beyond Module 1 to receive and dispose of other radioactive wastes suitable for geologic disposal. Module 2 would include greater-than-class-C (GTCC) waste and Special Performance Assessment Required (SPAR) waste (DOE 1999, p. A-1).

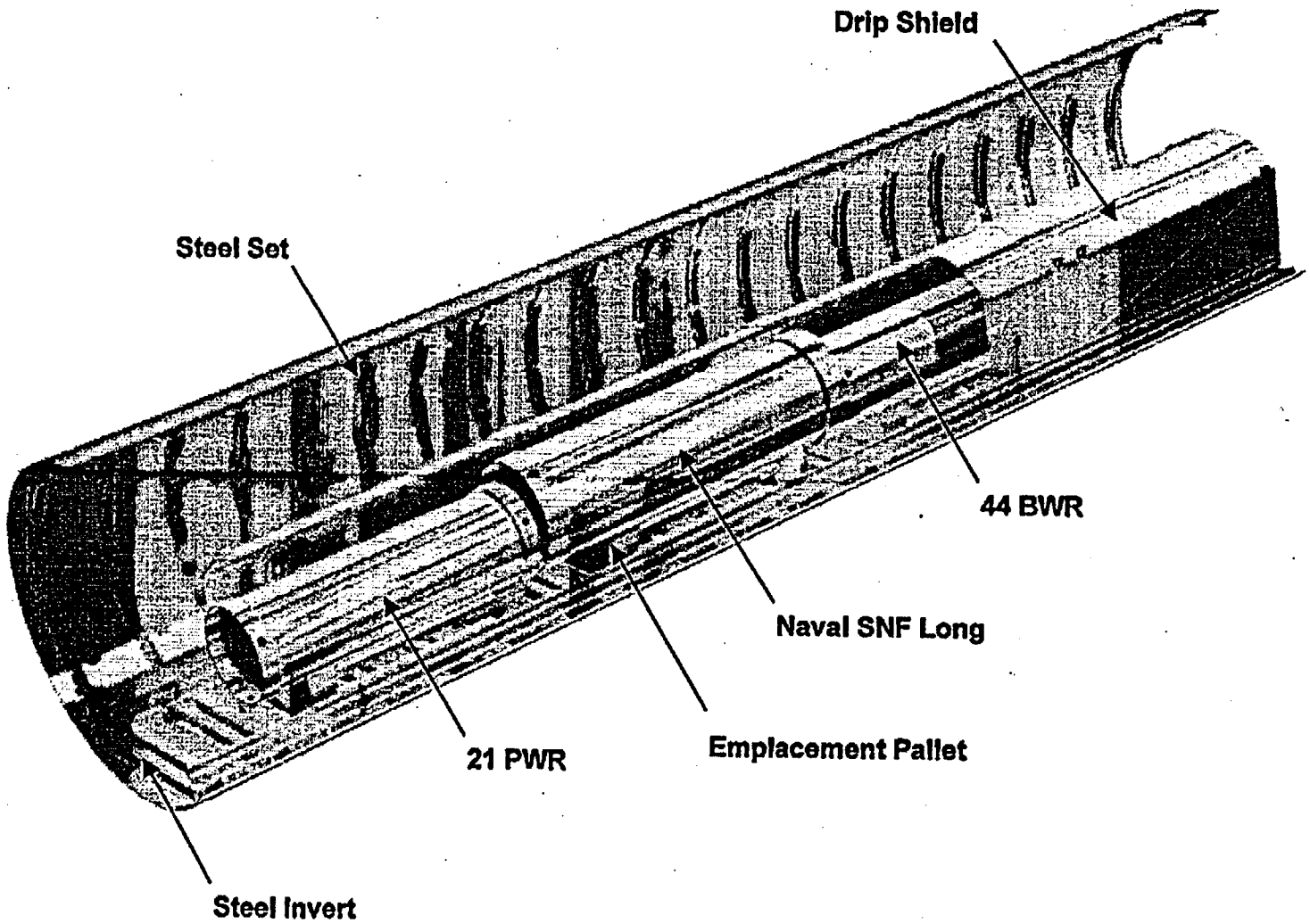

Figure 1-1. Engineered Barrier System

Inventory Module 2 adds 2,010 cubic meters of GTCC and 4,000 cubic meters of SPAR waste to Inventory Module 1 (DOE 1999, pp. A-57 and A-59). Additional explanation of the inventory modules is discussed in Sections 3 and 5.

1.3 QUALITY ASSURANCE

Under the provisions of activity evaluation, *WPO Technical Input to SR - 1101 2125 M4* (CRWMS M&O 1999c), this report is considered a technical document for informational purposes and will not be used as qualified input into products subject to the *Quality Assurance Requirements and Description* (DOE 2000) requirements. The development plan states that AP-3.11Q, *Technical Reports*, may be used as a guide only. The *Technical Document Development Plan (DP) for the Update to EIS WP Engineering File – SR* (CRWMS M&O 1999d) was developed in accordance with AP-2.13Q, *Technical Product Development Planning*, and identifies applicable sections of AP-3.11Q for this report.

This document and its conclusions may be affected by technical product input information that requires confirmation. Any changes to the document or its conclusions that may occur as a result of completing the confirmation activities will be reflected in subsequent revisions. The status of the input information quality may be confirmed by review of the Document Input Reference System database.

1.4 MONITORED GEOLOGIC REPOSITORY FUNCTIONS

Site Characterization Phase–This phase includes those activities associated with gathering and evaluating data to determine the suitability of the site; preparing repository designs to support the SR, License Application, and Exploratory Studies Facility construction (including WP designs); preparing the SR Consideration Report, preparing the license application for construction authorization and supporting its review; and preparing the EIS and supporting its review (CRWMS M&O 1999e, p. 3-1).

Construction Phase–This phase includes construction of surface facilities, continued excavation and equipping of subsurface facilities, procurement of disposal containers (DCs) (empty WPs), demonstration of some repository operations, and preparation of an update to the License Application to receive, package, and emplace waste (CRWMS M&O 1999e, p. 3-1). Construction will begin about five years before the start of waste receipt and emplacement, and construction of the underground facility will continue during the Operations Phase (CRWMS M&O 1999e, p. 3-3).

Operations Phase–This phase includes continued procurement of DCs, procurement of the emplacement pallets, receiving the waste, inserting waste and sealing DCs, emplacing loaded WPs in the repository, and gathering data to support predictions of repository performance (CRWMS M&O 1999e, p. 3-3). Continuous preclosure airflow, which will be applied to the emplacement drifts for temperature control, will commence with emplacement of loaded WPs and continue until repository closure. If the option is invoked to increase the capacity of the repository from 70,000 MTHM to that required to accommodate all of the Nation's projected

nuclear waste inventory, the Operations Phase will be lengthened to accommodate the increased inventory.

Monitoring Phase–This phase begins when all the waste has been emplaced and includes safeguarding the waste, maintaining the capability for retrieval, gathering data to support predictions of the repository performance, and preparing an application to amend the repository license for permanent closure. This phase will be terminated by a direction to retrieve the waste or an authorization to close the repository.

Closure Phase–This phase includes emplacing the drip shields, closing and sealing the subsurface facilities, and creating institutional barriers (CRWMS M&O 1999e, p. 3-4).

Postclosure Phase–During this phase, the engineered and natural barriers will contain and isolate the radioactive waste for thousands of years. This phase could include the capability to provide postclosure monitoring (CRWMS M&O 1999e, p. 3-4).

1.5 ENGINEERED BARRIER SEGMENT/WASTE PACKAGE ACTIVITY PERIODS

In addition to the phases discussed in Section 1.4, time periods within the phases that certain EBS/WP activities will be conducted are discussed below for the SR design.

Engineered Barrier Segment/Waste Package Design and Procurement Period–During the EBS/WP Design and Procurement Period, the design process will create WP designs that optimize packaging efficiency and that can be fabricated. The WP designs will comply with regulatory criteria as applicable and will accommodate uncanistered fuel (UCF), canistered SNF, DHLW canisters, and other authorized waste forms as stipulated by DOE. Also during this period, the emplacement pallet and the drip shield will be designed.

It is expected that the WPs and emplacement pallets will be procured from existing, experienced commercial sources away from the site of the repository during the MGR Construction and Operations Phases. Sources for the drip shield will be dependent on the materials specified by the designs and the capabilities of the fabricator. Timing of procurement will also be dependent on the materials specified by the designs, their impact on the retrievability option, and when the closure phase begins. The EBS/WP design and procurement period will continue through the repository's construction, operations, monitoring, and closure phases until all waste has been emplaced in the repository and installation of the drip shield.

Waste Package Normal Operations Period–The WP Loading, Closure, and Handling Period (part of the Operations Phase of the repository) includes packaging the waste in DCs, closure of the DCs, emplacing loaded WPs in the repository, and gathering data to support predictions of repository performance (CRWMS M&O 1999e, p. 3-3). Only activities related to WP loading and closure (lid installation), transport, and emplacement will be discussed.

For the loading and closure operations, the DC is fitted with lifting and base collars and lifted onto a DC cart servicing the assembly transfer system or the canister transfer system. After the DC is loaded, the DC will be forwarded to a welding station. At the welding station, the inner lid will be welded and inspected, and the DC will be evacuated and filled with helium. The outer

lids will be installed, welded, and inspected. When the welds are accepted, the DC becomes a WP (CRWMS M&O 1999e, p. 3-15). After the welding and inspection operations are complete, the last set of operations involve transferring the WP to a decontamination hot cell, final decontamination, final inspection, certification, tagging, and loading the WP on the WP transporter. The transporter is a rail-mounted, shielded vehicle in which the WP is conveyed to an emplacement drift. At the entrance to the emplacement drift, the WP (with its emplacement pallet) is lifted by a gantry and placed within the drift.

As part of normal repository operations, the WP will be subject to the following loads associated with the actions of handling, transportation, and/or emplacement equipment:

- Loading of the waste form into a DC
- Engaging the DC cell crane lifting fixture onto the WP prior to lifting
- Decontaminating the WP using pelletized carbon dioxide
- Shifting/settling of the waste during horizontalization and transport of the WP
- Gantry lifting heads engaging WP prior to lifting.

Waste Package Design-Basis Events–The information contained in the former EF reflects the current information on the WP design-basis events (DBEs).

Monitoring Period–The Monitoring Period begins when all the waste has been emplaced and includes, safeguarding the waste, maintaining surface and subsurface facilities required to support performance confirmation, responding to unusual events, conducting maintenance, maintaining the capability for retrieval, gathering data to support predictions of the repository performance, and preparing an application to amend the repository license for permanent closure (CRWMS M&O 1999e, p. 3-3).

Substantially Complete Containment Period–The Substantially Complete Containment (SCC) Period (Closure Phase and early part of the Postclosure Phase of the repository) begins with emplacing the drip shield, closing and sealing the subsurface facilities, decontaminating, decommissioning, removing the surface facilities, creating institutional barriers, and returning the site to its natural condition as required by the Nuclear Regulatory Commission (NRC) (CRWMS M&O 1999e, p. 3-3). Institutional barrier systems will be utilized to inhibit human disturbance and disruption of the repository site. The planning and design of institutional barriers will be accomplished when closure requirements are defined (CRWMS M&O 1999e, p. 3-21). The SCC Period continues while the WP is relied upon to provide containment of the radionuclides. This is an inherent part of the WP design as reflected in the assumptions listed in Section 2. The SCC Period ends when the WP is no longer relied upon to provide containment of the radionuclides.

Waste Isolation Period–The information contained in the former EF reflects the current information on the waste isolation period.

1.6 WASTE PACKAGE DESIGN DECISIONS AND EVOLUTION

The SR design can be characterized as a medium thermal loading design. This design relies on more thermal management techniques than the high thermal loading design used in the VA to

limit the impacts of the heat released by the waste. Thermal management techniques may include thermal blending of the SNF, spacing of the WPs, wider spacing of the waste emplacement tunnels (drifts), and preclosure ventilation. Thermal blending of SNF reduces the peak heat output of the WPs, thereby limiting temperatures in the rock around the WPs. Closer spacing of the WPs in the emplacement drifts reduces temperature variations in the drifts, simplifies the analysis of the effects of heat, and reduces the total length of drifts excavated. Spacing the drifts further apart reduces the effects of the heat from each drift on neighboring drifts, leaves a wide region of rock between drifts that stays below the boiling point of water so that water can move around the hotter drifts and flow down through the cooler areas, and limits the long-term alterations to the repository rock caused by the heat from the waste. Preclosure ventilation makes it possible to maintain temperature limits in the rock and around the WPs during operation despite the very close WP spacing, and reduces maximum temperatures after closure by removing energy before closure that would otherwise heat the repository rock.

The SR design differs from the VA design in a number of other important aspects. While both use a two-layer WP, the SR design places the corrosion-resistant material on the outside rather than the inside to provide long-term protection to the more corrosion-susceptible structural material. The SR design also adds defense-in-depth with a drip shield with the option of covering it with backfill to protect the WPs from dripping water while they are hot enough to be susceptible to localized corrosion. Finally, the SR design uses steel structural materials in the drifts instead of the concrete evaluated in the VA design in order to avoid the possible impacts of the chemicals in the concrete on mobilization and movement of radionuclides (CRWMS M&O 1999b, p. viii).

1.6.1 Change to Drift Emplacement of Robust Waste Package from Borehole Emplacement of Thin Wall Stainless Steel Waste Package

The information contained in the former EF reflects the current information on the change to robust WP designs.

1.6.2 Change to Disposal of Mostly Canistered Spent Nuclear Fuel

The information contained in the former EF reflects the current information on the change to mostly canistered SNF.

1.6.3 Change to Disposal of Mostly Uncanistered Spent Nuclear Fuel

The information contained in the former EF reflects the current information on the changes to mostly UCF.

2. INPUTS

This section lists regulations, codes, standards, and requirements that are pertinent to the SR WP design in general. In addition to the Code of Federal Regulations (CFR), the *Monitored Geologic Repository Project Description Document* (CRWMS M&O 1999f) is also used as a reference. This document references an interim guidance of 10 CFR 63 (Dyer 1999) as the regulatory framework because the proposed rulemaking for the repository at Yucca Mountain, 10 CFR 63, is in draft form.

Section 2.1 lists the SR design requirements that are based on regulations, codes, and standards. Section 2.2 lists design requirements and assumptions that were developed to align the SR design with the Federal regulations at the Project level. It is noted that the requirements in this section are provided as background design information and are not intended to show compliance.

2.1 REGULATIONS, CODES, AND STANDARDS

2.1.1 Waste Package Design–Site Recommendation

The EBS, along with the repository design and operations, shall include provisions for controlling doses such that when approved operational procedures are followed, the exposure doses specified in 10 CFR 20.1201 for occupational doses and 10 CFR 20.1301 for individual members of the public, are not exceeded (10 CFR 20.1201 and 10 CFR 20.1301).

2.1.2 Engineered Barrier Segment Major Component Characteristics and Requirements

The engineered barrier system shall be designed so that, working in combination with natural barriers, the expected annual dose to the average member of the critical group shall not exceed 0.25 mSv (25 mrem) total effective dose equivalent at any time during the first 10,000 years after permanent closure, as a result of radioactive materials released from the geologic repository (Dyer 1999, Sec. 113[b]).

Identify those design features of the engineered barrier system, and natural features of the geologic setting, that are considered barriers important to waste isolation (Dyer 1999, Sec. 114[h]).

Describe the capability of barriers, identified as important to waste isolation, to isolate waste, taking into account uncertainties in characterizing and modeling the barriers (Dyer 1999, Sec. 114[i]).

Provide the technical basis for the description of the capability of barriers, identified as important to waste isolation, to isolate waste (Dyer 1999, Sec. 114[j]).

2.1.3 Criticality Protection

The engineered barrier system shall be designed so that, working in combination with the natural barriers, the expected annual dose to the average member of the critical group shall not exceed 0.25 mSv (25 mrem) total effective dose equivalent at any time during the first 10,000 years after permanent closure, as a result of radioactive materials released from the geologic repository (Dyer 1999, Sec. 113[b]).

2.1.4 Handling

Retrievability of waste (Dyer 1999, Sec. 111[e]).

A general description of the structures, systems, components, equipment and process activities at the geologic repository operations area (Dyer 1999, Sec. 112[a]).

Means to limit the time required to perform work in the vicinity of radioactive materials (Dyer 1999, Sec. 112[e(2)]).

Ability of structures, systems, and components to perform their intended safety functions, assuming the occurrence of design-basis events (Dyer 1999, Sec. 112[e(8)]).

2.2 PROGRAM/PROJECT DESIGN REQUIREMENTS/ASSUMPTIONS

The requirements and assumptions used in the design of the EBS/WP Subsystem are documented in the *Monitored Geologic Repository Project Description Document* (CRWMS M&O 1999f). A summary of the requirements and assumptions pertinent to the EBS/WP EF are provided below. For more details on the background and the rationale of the stated requirements and/or assumptions, please refer to the *Monitored Geologic Repository Project Description Document.*

2.2.1 Waste Package Requirements

The MGR design shall allow the repository to be closed as early as 50 years after emplacement of the initial WP or to be kept open for at least 125 years from initiation of waste emplacement. The MGR shall include provisions that support a deferral of closure for up to 300 years from initiation of waste emplacement, with appropriate monitoring and maintenance (CRWMS M&O 1999f, 2.1.1.3).

The MGR design under preclosure and postclosure normal operating conditions shall preserve/not impair the condition of the zirconium commercial spent nuclear fuel cladding (SNF) as received at the repository. A zirconium cladding temperature limit of 350°C (662°F) for commercial SNF accommodates this criterion (CRWMS M&O 1999f, 2.1.1.4).

The expected annual dose to an average individual in a critical group living 20 km from the repository, as defined in proposed rule 10 CFR 63.115(b), shall not exceed 25 mrem total effective dose equivalent from all pathways and all radionuclides during the first 10,000 years after closure, as a result of radioactive materials released from the geologic repository (CRWMS M&O 1999f, CPA 035).

Appropriate credit will be taken for SNF cladding in retarding the release of radionuclides based on analysis of cladding damage occurring in the repository (CRWMS M&O 1999f, CPA 037).

2.2.2 Waste Package Containment Barrier Shield

Waste package containment barriers will provide sufficient shielding for protection of waste package materials from radiation enhanced corrosion (CRWMS M&O 1999f, CPA 019).

Individual waste packages will not provide any additional shielding for personnel protection (CRWMS M&O 1999f, CPA 019).

Additional shielding for personnel protection will be provided on the subsurface and surface waste handling systems, structures, and components, including the waste package transporter (CRWMS M&O 1999f, CPA 019).

2.2.3 Rock, Drift Wall, and Surface Temperature

To limit the predicted thermal and thermomechanical response of the host rock and surrounding strata, and groundwater system, the EBS configuration and loading shall have the following requirements:

- At least 70 percent of the total heat generated by the waste packages within the emplacement drifts during the preclosure period shall be removed by ventilation (CRWMS M&O 1999f, 2.1.1.1).

2.2.4 Waste Package Performance

The following factors apply to WP performance:

- Proof of principle demonstrations of waste package retrieval will be documented before License Application through supplier performance data, and proof-of-principle testing will be conducted following License Application (CRWMS M&O 1999f, CPA 022).

- Individual waste packages will not provide any additional shielding for personnel protection (CRWMS M&O 1999f, CPA 019).

- Waste package containment barriers will provide sufficient shielding for protection of waste package materials from radiation enhanced corrosion (CRWMS M&O 1999f, CPA 019).

- The MGR design under preclosure and postclosure normal operating conditions shall preserve/not impair the condition of the zirconium commercial spent nuclear fuel (SNF) cladding as received at the repository. A zirconium cladding temperature limit of 350°C (662°F) for commercial SNF accommodates this criterion (CRWMS M&O 1999f, 2.1.1.4).

- The expected annual dose to an average individual in a critical group living 20 km from the repository, as defined in proposed rule 10 CFR 63.115(b), shall not exceed 25 mrem total effective dose equivalent from all pathways and all radionuclides during the first 10,000 years after closure, as a result of radioactive materials released from the geologic repository (CRWMS M&O 1999f, CPA 035).

- The Criticality Control Period lasts to at least the end of the 10,000-year period of regulatory concern addressed in the postclosure performance measure provided in assumption PDD CPA 035. Longer periods will also be considered in analyzing criticality control (CRWMS M&O 1999f, CPA 036).

2.2.5 Criticality Control Period

Credit will be received for Principal Isotope burnup in disposal criticality evaluations of commercial light water reactor spent nuclear fuel. Burnup credit will also be received for naval spent nuclear fuel (CRWMS M&O 1999f, CPA 030).

Credit for burnup by analysis will be allowed based on records of the exposure history of the individual commercial spent nuclear fuel assemblies. This will eliminate the need for the repository waste handling baseline design to have spent nuclear fuel burnup measurement capability (CRWMS M&O 1999f, CPA 031).

It is assumed that the disposal criticality analysis methodology as presented in the *Disposal Criticality Analysis Methodology Topical Report* (YMP 1998), with its use of risk-informed methodology and disposal burnup credit, will be accepted by the NRC for demonstrating that designs meet the disposal criticality control requirements (CRWMS M&O 1999f, CPA 032).

Credit can be taken for the presence of neutron-absorber material in/from criticality control panels and rods made of a material that will last a sufficiently long time in the projected range of repository environments for disposal criticality analyses. The sufficiency of a material lasting in the range of projected repository environments must be determined by detailed geochemistry evaluations (CRWMS M&O 1999f, CPA 033).

The Criticality Control Period lasts to at least the end of the 10,000-year period of regulatory concern addressed in the postclosure performance measure provided in assumption PDD CPA 035. Longer periods will also be considered in analyzing criticality control (CRWMS M&O 1999f, CPA 036).

3. ENVIRONMENTAL IMPACT STATEMENT CONCEPT ALTERNATIVES, OPTIONS, AND MODULES

3.1 AREAL MASS LOADING ALTERNATIVES

The SR design includes an areal mass loading of approximately 60 MTHM/acre provided by line-loaded (10 cm spacing) WPs, and a drift spacing of 81 m (CRWMS M&O 1999b, p. 5-44). This loading ensures that there will be sufficient portions of the pillar temperatures below the boiling point to allow water to drain through the pillars when the adjacent rock is above the boiling point of water (CRWMS M&O 1999b, p. 5-44). To reduce the maximum WP heat output, thermal blending of waste will be performed such that no WP exceeds a thermal output of 11.8 kW at emplacement (CRWMS M&O 1999b, Table 5-4).

Blending would reduce the maximum WP heat output to within 20 percent of the average WP heat output of 9.8 kW

3.2 WASTE FORM OPTIONS

The CSNF is received at the repository in either dual-purpose canisters (DPCs) containing SNF assemblies or as UCF assemblies shipped in transportation casks. This option is identified in this EF as (DPC/UCF). Most of the non-CSNF waste forms (DHLW, DOE-owned, GTCC and SPAR) are assumed to be produced and shipped in DISPCs. For the SR design, the DISPC for CSNF is not considered because thermal blending of the CSNF at the repository is necessary to achieve the low thermal impact of the SR design.

3.3 TRANSPORTATION OPTIONS

The information contained in the former EF reflects the current information on the transportation options.

3.4 INVENTORY MODULES

The information contained in the former EF reflects the current information on the inventory modules.

3.5 EMPLACEMENT PALLET POSITIONING VARIATIONS

The SR design includes a pre-assembled emplacement pallet design. The WPs will be placed in the drift by lifting the WP via the emplacement pallet from below (CRWMS M&O 1999b, p. 6-16). Only one positioning variation (one emplacement pallet for each WP) will be addressed in this supplement.

INTENTIONALLY LEFT BLANK

4. REFERENCE DESIGN DESCRIPTION

4.1 ENGINEERED BARRIER SEGMENT/WASTE PACKAGE FUNCTIONS

4.1.1 Waste Package

The information contained in the former EF reflects the current information on the WP functions.

4.1.2 Waste Package Emplacement Pallet

For the SR design, the emplacement pallet replaced the support/pier assembly and also aids in the lifting and emplacing of the WP in the drifts.

4.1.3 Drip Shield

An added component to the SR design is a drip shield. The drip shield is a rigid structure that diverts water away from the WPs (CRWMS M&O 1999b, p. 4-17). Inclusion of a drip shield increases the degree of defense-in-depth and protects the WP from possible contact with chemically aggressive seepage water during the thermal pulse, when the WP material is more susceptible to corrosion occurring from such water (CRWMS M&O 1999b, p. 6-15).

4.2 ENGINEERED BARRIER SEGMENT/WASTE PACKAGE DESCRIPTIONS

4.2.1 Multi-Layer Waste Package

The SR WP design (including the basket) is not required to be designed and built to the American Society of Mechanical Engineers (ASME) pressure vessel codes, as the WP does not function as a pressure vessel. However, it was decided that the DC shall be fabricated and inspected in accordance with the ASME Boiler and Pressure Vessel Code, Section III, Division I, Subsection NB (Class 1 Components) (ASME 1995) to the maximum extent practicable. Deviations from the Code shall be documented and submitted for approval. It is not the intent that this be an N-stamped vessel but rather that the ASME Code be used as standard for fabrication and inspection (CRWMS M&O 2000a, p. 4 and 5).

The WP design approach for the SR design, is focused on a metallic, multi-layer WP for CSNF, DOE-owned SNF, and DHLW. The outer barrier of the WP is made from a solution-annealed, corrosion-resistant high-nickel alloy, ASTM (American Society for Testing and Materials) B 575 N06022 (Alloy 22), and has a nominal thickness of 20 mm, however, due to larger size and weight, some WP designs will have a 25-mm-thick outer shell. The inner structural shell is made of a nuclear grade (NG) 316 stainless steel and has a nominal thickness of 50 mm. The WP corrosion-resistant material (Alloy 22) protects the underlying structural material from corrosion while the structural material supports the thinner more expensive corrosion-resistant material (CRWMS M&O 1999b, p. 6-14). When combined with the use of a titanium drip shield, the use of two distinctly different corrosion-resistant materials reduces the probability that a single environment effect will cause rapid failure of both.

There are outer and inner lids on each end of the WP. The outer lids are Alloy 22, with a thickness of 25 mm. The inner lids are 316 NG stainless steel, with a thickness that varies from 65 mm to 130 mm depending on the WP design. In addition to the inner and outer lids, a 10 mm Alloy 22 lid between the outer and inner lid on the top end of the WP provides additional protection against stress corrosion cracking in the closure weld area.

Several WP design configurations are required to best dispose of the CSNF, DOE-owned SNF, and DHLW. In addition, there are considerations of size, fuel type, canister designs, and basket configuration. The fuel basket for the CSNF consists of either stainless-steel-boron-alloy plates to provide criticality control or A 516 carbon-steel plates when control rods are used for criticality control, tubes of carbon steel, and optional aluminum plates. The plates used in the basket construction provide heat conduction and structural support. The optional aluminum plates, referred to as thermal shunts, are placed along side of the basket plates to enhance the transfer of heat from the interior of the basket out to the inner shell of the WP.

The basket plates interlock to form a grid into which the square carbon steel tubes are inserted. The carbon steel tubes provide additional structural support and provide additional paths for conducting heat from the fuel to the inner layer of the WP. Carbon steel guides welded to the inner structural material support the basket.

A number of different WP design configurations has been evaluated. For the SR design, it was determined that there would be five different WP configurations for CSNF to best accommodate the fuel variations. CSNF includes fuel from both pressurized water reactors (PWR) and boiling water reactors (BWR). Surplus plutonium used to manufacture commercial mixed-oxide (MOX) fuel is also included in the CSNF. The WPs for the CSNF hold as many as 21 PWR SNF assemblies or 44 BWR SNF assemblies. The 21 PWR Absorber Plate design is illustrated in Figure 4-1 and represents the design concept and material of construction for all WP designs.

There are also five different configurations required for DHLW and DOE-owned SNF to best accommodate the waste variations. Two of the five designs, differing only in length, accept a canister that contains naval SNF. The three different codisposal WP designs accommodate both canisters of DHLW and DOE-owned SNF. One design accommodates two DHLW canisters and two multi-canister overpacks (MCO) containing DOE-owned SNF canisters. And the remaining two, differing only in length, accommodates five DHLW canisters with a sufficient void space in the center for the disposal of a DOE-owned SNF canister. The immobilized plutonium will be contained in the DHLW canisters. It should be noted that when immobilized plutonium is included in the DHLW, the canister of DOE-owned SNF will not be placed in the center void space.

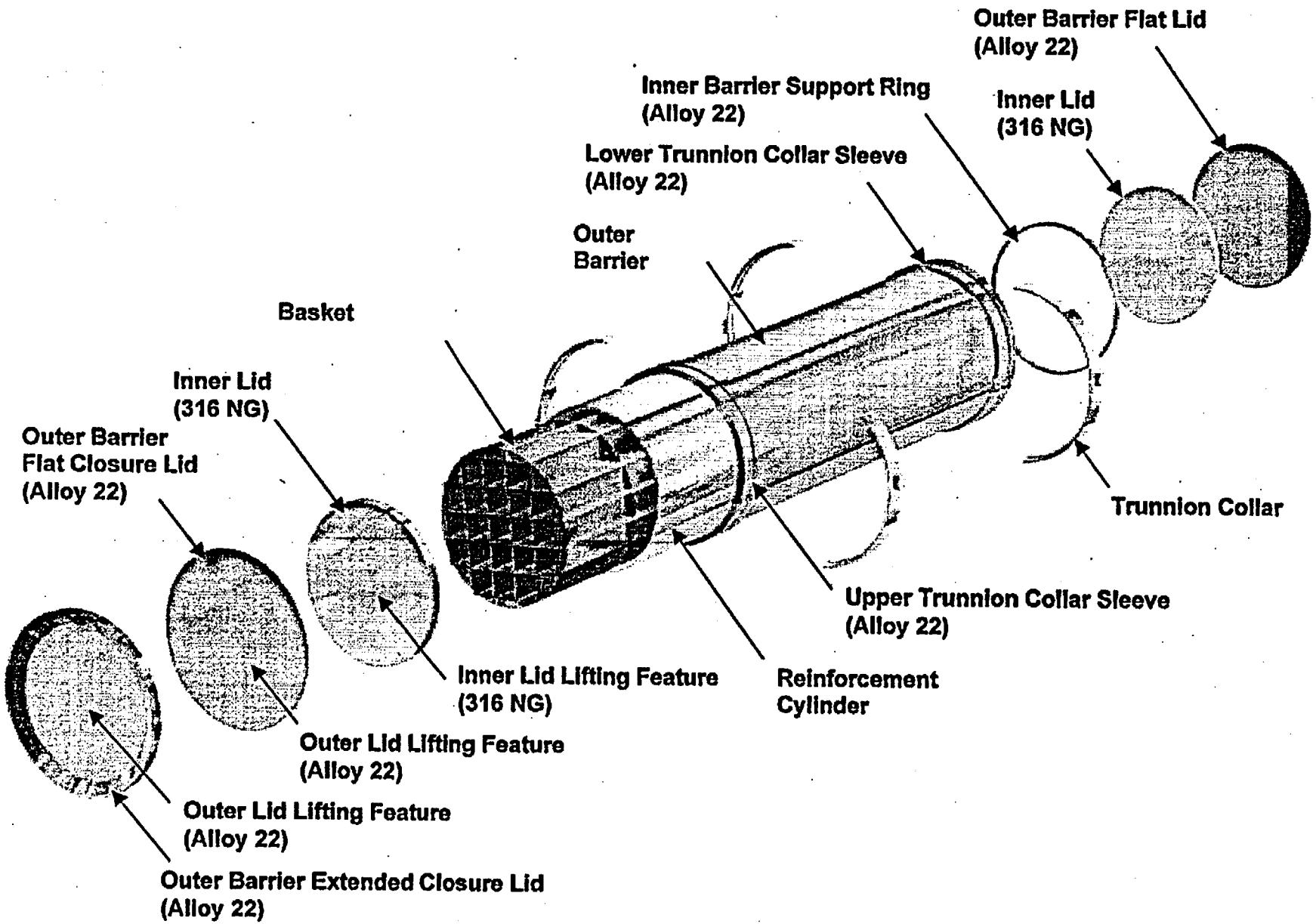

Figure 4-1. 21 PWR Absorber Plate–Site Recommendation Design

All of the SR designs incorporate the multi-layer WP design concept. The same handling configuration is used for all WPs. Trunnion collar sleeves are at each end of each WP for ease of handling the WP at the Surface facility.

4.2.2 Waste Package Material Selection

In addition to the information in the former EF, supplemental information on the WP material selection for the SR design is provided in Sections 4.2.2.1, 4.2.2.2, and 4.2.2.3.

4.2.2.1 Waste Package Containment Barrier Materials

Corrosion-Resistant Materials–For a longer WP lifetime, corrosion performance was determined to be the most important criterion. Included in the corrosion performance is the resistance to general and localized corrosion, stress-corrosion cracking, and hydrogen-assisted cracking and embrittlement (hydrogen damage), as well as long-term thermal aging effects on corrosion susceptibility. The following criteria was applied to combinations and arrangements of the WP layers instead of each individual layer because of the potential for galvanic/crevice synergistic effects. These factors are: provide defense-in-depth; ease of fabrication; potential impact of thin corrosion-resistant material barriers on WP loading, handling, and emplacement; and cost (CRWMS M&O 2000b, p. 3). Selected nickel-based and titanium-based alloys are the most promising corrosion-resistant candidate materials for the expected Yucca Mountain repository oxidizing environment based on a number of assessments of potential candidates for materials for WP barriers (CRWMS M&O 2000b, p. 4). Use of a corrosion-resistant material as the outer layer will significantly lower the risk of WP failure due to corrosion (CRWMS M&O 2000b, p. 15). Use of a drip shield, even though it is not a containment barrier, will provide defense-in-depth when used in combination with the WP containing at least one corrosion-resistant barrier (CRWMS M&O 2000b, p. 13). Alloy 22 was selected as the preferred material for the outer barrier of the WP (CRWMS M&O 2000b, p. 17). Alloy 22 has excellent resistance to the corrosion processes due to the environment expected at the repository (CRWMS M&O 2000b, p. 16), welding of titanium requires greater care than Alloy 22 (CRWMS M&O 2000b, p. 15), cost considerations result in use of a structural material inside the corrosion-resistant layer, and Alloy 22 has a better thermal expansion coefficient match to 316 stainless steel compared to titanium (CRWMS M&O 2000b, p. 16). The use of a drip shield eliminates the need for two corrosion-resistant barriers in the WP design (CRWMS M&O 2000b, p. 17).

Structural Materials–The structural component of the WP is intended to be used in combination with corrosion-resistant material. Therefore, this material is not viewed as a corrosion barrier and the functional requirements are primarily structural support for the corrosion-resistant material at a low cost (CRWMS M&O 2000b p. 4). Stainless steel Type 316 NG has been selected based on cost and strength since it is a structural component and is not intended to be a corrosion barrier (CRWMS M&O 2000b p. 5).

4.2.2.2 Waste Package Internal Components

Basket Guides, Corner Guides, Fuel Tubes, and DHLW Canister Guides–These internal components must be able to sustain mechanical loads due to handling, emplacement, and, if necessary, retrieval so mechanical performance was a selection criterion. The internal

components provide an additional path for heat conduction, from the fuel to the inner layer, so thermal performance was an important selection criterion. The fuel tubes are in contact with both the waste form and the fuel basket plates. If the tubes cause degradation of the waste form, release rates could be increased, and if they cause degradation of the plates, criticality control could be compromised. Therefore, compatibility with other materials was selected as an important criterion. In addition, the components have a significant mass, making cost another criterion. Long-term performance is not required of these components, and, therefore, expensive corrosion-resistant materials are not needed (CRWMS M&O 2000c, p. 2 and 3). Two grades of carbon steel (ASTM A 516 Grades 55 and 70) were found to be the best choice (of the five candidate materials evaluated) when material cost was considered. The choice of the particular Grade 55 or 70 is left to the discretion of the designers to provide flexibility in the design (CRWMS M&O 2000c, p. 7).

Neutron-Absorber Material–The most important function of the neutron absorber is to absorb neutrons and reduce the potential for criticality. The neutron-absorber material is typically an additive material to a carrier material (e.g., stainless steel alloyed with a boron compound). The neutron absorber (carrier material) is used as part of the internal component structure and is designed as interlocking plates within the basket structure (CRWMS M&O 2000d, p. 2). Corrosion behavior is important in keeping the neutron-absorber material in place and effective in controlling criticality long after emplacement. So chemical performance in a variety of environments was used as an important selection criterion. Mechanical performance was used as an evaluation factor because the interlocking plates must be able to sustain mechanical loads due to handling, emplacement, and, if necessary, retrieval. Compatibility with other materials was considered as the basket plates must not degrade the waste form. The basket plates also provide an important path for conducting heat from the fuel to the WP layers, so thermal performance was considered. The basket plates provide a substantial fraction of the cost of the DC, so a moderate importance was assigned to cost (CRWMS M&O 2000d, p. 2 and 3). Material of choice for the neutron absorber is Neutronit A978. The selection was based on the corrosion performance of this material compared to the other candidate materials and available boron concentration (CRWMS M&O 2000d, p. 9). The composition of Neutronit is similar to ASTM A 240 Type 316 but with 1.6% boron (CRWMS M&O 2000d, p. 5).

Thermal Shunt–The thermal shunt, when used, provides an important additional high thermal conductivity path for conducting heat from the fuel to the WP layers (CRWMS M&O 2000d, p. 2). Thermal conductivity of the thermal shunt material is very important (CRWMS M&O 2000d, p. 6). The thermal shunts are in contact with the waste form so compatibility with the CSNF was chosen as another criterion used for evaluation (CRWMS M&O 2000d, p. 6). The thermal shunts are needed during the early periods of the repository storage when the decay heat of the CSNF is relatively high. Thus, the material selected need not have a high degree of corrosion resistance (CRWMS M&O 2000d, p. 6) and was not used as an evaluation criterion. The thermal shunts are required to have adequate structural strength to withstand handling, emplacement, and possible retrieval operations. However, these service loads are not very large, so the mechanical performance was not selected as an evaluation criterion (CRWMS M&O 2000d, p. 6). Aluminum alloys 6061 and 6063 were selected over copper due to concerns that, when the WP is breached and water enters the WP, copper may react with the chloride ions in the water which potentially could result in accelerated degradation of the zirconium cladding and consequential release of radionuclides from the fuel rods (CRWMS M&O 2000d, p. 7).

Fill Gas–The information contained in the former EF reflects the current information on the WP fill gas.

4.2.2.3 Drip Shield

A drip shield fabricated from a corrosion-resistant material functions as a corrosion barrier reducing the need for a dual corrosion-resistant barrier WP design. In addition, the drip shield being external to the WP eliminates some of the fabrication-related issues such as thermal expansion mismatch, handling of several thin layers of barriers, etc. Another advantage with the drip shield design is that it can be installed just prior to repository closure thus allowing deferral of costs to the future (CRWMS M&O 2000b, p. 13). The selection of Alloy 22 for the WP barrier leads to titanium Grade 7 (ASME SB-265 UNS R52400) and titanium Grade 24 (ASME SB-265 UNS R56400) as the materials of choice for the drip shield. This selection is because: choice of titanium for the drip shield satisfies the requirements for defense-in-depth by avoiding materials of common mode failures and titanium Grade 7 has a higher threshold temperature for crevice corrosion compared to Alloy 22 for the potential crevice environments in the repository (CRWMS M&O 2000b, p. 17).

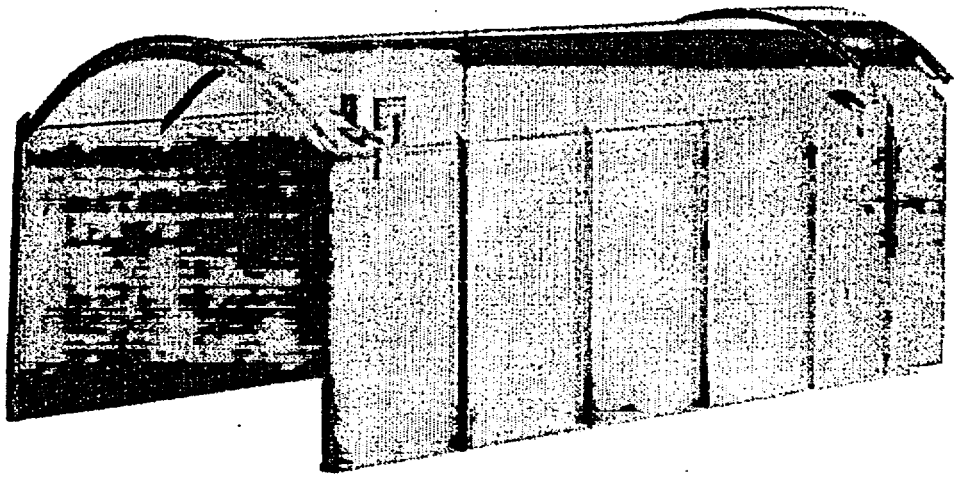

Figure 4-2. Drip Shield

4.2.3 Criticality Analysis and Control

As defined within 10 CFR 63, the engineered barrier system consists of the WPs and the underground facility in which they are emplaced. The engineered barrier system will function together with the natural barrier system to minimize the potential for conditions that would be conducive to a criticality event after the repository has been permanently closed. The WP is designed to perform its necessary safety functions, including criticality safety, assuming occurrence of a DBE (YMP 1998, p. 1-2).

The approach of using the natural features and characteristics of the site, in combination with the engineered components of the repository design, to limit criticality potential supports the defense-in-depth concept; should one system fail, another exists to provide adequate protection. The repository design will incorporate multiple barriers that are both redundant and diverse so as to minimize the potential for conditions conducive to criticality (YMP 1998, p. 1-2).

Criticality evaluations must look at all waste forms, which consist of CSNF (including BWR, PWR, and MOX), DOE-owned SNF (including naval SNF), immobilized plutonium, and DHLW. Present information is that DHLW will not contain sufficient amounts of fissile material to pose a criticality risk, even in the absence of any criticality control material. Therefore, the only foreseen application of the criticality methodology to DHLW will be to demonstrate this fact for a few worst-case configurations (YMP 1998, p. 1-1).

4.2.3.1 Design Bases

The potential for nuclear criticality is determined by the composition of the waste and its configuration, including presence of moderator, reflecting structural material, and neutron absorbers. The initial configuration of the emplaced waste form is a dry WP, placed in a mined passageway (drift) inside the repository. The criticality evaluations confirm that, even with WP failure followed by degradation of the materials inside, the addition of moderator material and the loss of neutron-absorber material, consistent with design predictions, the repository will provide adequate protection to the health and safety of the public against criticality.

During the preclosure (operations) period, criticality control is required to protect the health and safety of the workers as well as that of the public. There is no human presence in the drifts during the postclosure period. Therefore, the principal criticality concern is potential radionuclide release. The objective of criticality control is to reduce radionuclide release into the environment to an acceptable level to meet dose limits.

4.2.3.2 Design Evaluations

Commercial Spent Nuclear Fuel–The method for analyzing the potential for criticality during the preclosure period is similar to the one currently used by facilities temporarily storing spent nuclear fuel. The effective neutron multiplication factor (k_{eff}) or criticality potential is calculated for specific events for designs containing SNF or waste with fissionable material. The k_{eff} calculated must be 1.0 or greater for a criticality to occur. The NRC requires that criticality safety be provided by ensuring a 5% margin, in addition to allowances for any bias in the method of calculation used to perform the calculation and the uncertainty in the experiment used to validate the method of calculation.

The evaluations are performed for events and processes that reflect the range of possibilities in the repository environment. The k_{eff} for each type of WP design must be evaluated separately, including differences in the waste forms. The evaluations that identify what can be loaded into a specific WP design are referred to as loading-curve evaluations. These evaluations result in plots that give the acceptable range for material to be placed in the specific WP designs. The plot considers the initial concentration of uranium 235 (enrichment) and the time and power at which the nuclear fuel operated (burnup).

The method for evaluating the criticality of CSNF will reduce the k_{eff} by accounting for the net depletion of fissionable material and the creation of neutron-absorbing isotopes as a result of fission in an operating reactor. This process is called burnup credit, and the magnitude of the k_{eff} reduction is proportional to the amount of energy that was produced in the fuel during reactor operation (burnup). Theoretically, burnup credit can be applied to any SNF, but only CSNF and naval fuel have the complete burnup histories for the individual assemblies that will be required to use the method. The use of burnup credit along with a risk-informed method, is presented in the *Disposal Criticality Analysis Methodology Topical Report* (YMP 1998).

Development of a regression curve is one way of quantifying the effectiveness of the measures to control criticality. The technique consists of two steps. The first step is to calculate the k_{eff} for a set of burnup-enrichment pairs that represent all the expected types of fuel, particularly those expected to give a value of k_{eff} that is near the upper subcritical limit. The upper subcritical limit is the limit below 1.0 that accounts for bias in the computer codes, uncertainty in the experiments used to validate the code, and any additional margin, e.g., the 5% mentioned above. The second step is to fit this set of values of k_{eff} with a regression for k_{eff} as a function of initial enrichment and burnup. This technique has been applied to the WP design for 21 PWR CSNF assemblies. The results can be shown in terms of three different examples of the regression, with k_{eff} set equal to the upper subcritical limit, under the following different configurations (YMP 1998, pp. C-40 through C-45):

- Intact basket, with neutron absorber remaining inside the WP
- Degraded basket, with neutron absorber flushed from the WP and the iron-oxide corrosion product distributed uniformly throughout the WP
- Degraded basket, with iron oxide settled to the lowest 3.5 rows of assemblies (YMP 1998, pp. C-25 and C-44).

The curves divide the fuel into the following two groups: fuel that is subcritical (has a k_{eff} less than the upper subcritical limit in the WP) and fuel that has a k_{eff} greater than the upper subcritical limit. With this interpretation, the three curves determine the fraction of the fuel that has a criticality concern under three different configurations as 3.2%, 5.7%, and up to 11.2%, respectively (YMP 1998, pp. 5-46 and C-51). Applying the third configuration, which is the most conservative, this analysis suggests that additional measures to control criticality may be required for 11.2% of the fuel from PWRs.

For this more reactive fuel, use of new reactor control rod assemblies, spent reactor control rod assemblies, and disposable control rod assemblies made especially for WPs have been examined. The disposable control rod assemblies (zirconium clad B_4C) are the leading candidate and show they are an excellent method of criticality control for PWR fuel assemblies. BWR assemblies do not have any control rod guide tubes to allow the insertion of control rods, preventing the use of this criticality control option.

The waste form closest to the CSNF is the MOX fuel, presently planned to be produced from surplus weapons plutonium for use in one, or more, commercial nuclear reactors. The criticality potential of this waste form has been evaluated in the WP designed for 21 PWR fuel assemblies,

as used above. This WP selection makes comparisons easier among the CSNF having the greatest criticality potential. For any stage of degradation, and at any time after emplacement, the k_{eff} for such a WP will be below the subcritical limit. However, approximately half of the spent MOX fuel is expected to have too high a heat-generation rate to be put in the WP for 21 PWR assemblies. See Section 4.2.4 for impact of the WP thermal output for the loading of the WP. These assemblies will be put in WP designed for 12 PWR assemblies. These WPs are designed for fuel with high burnup, and, therefore, would not require additional material to control criticality. Calculations have shown this to be valid (CRWMS M&O 1999g, pp. viii and ix).

Safety Features–Commercial SNF WP designs incorporate neutron-absorber plates in the basket to provide a criticality control function. Material evaluations favor a borated type 316 stainless steel with approximately 1.6 weight percent natural boron for basket plates. Corrosion resistance is essential to maintaining the long-term spatial distribution of the criticality control material within the WP for the disposal periods being considered. The borated stainless steel is corrosion resistant, thus allowing credit to be taken for it in criticality analysis for long time frames.

DOE-Owned Waste Form Evaluations–Of the variety of DOE-owned, the aluminum-clad matrix fuels from research reactors were found to be among those having the highest potential for criticality. The research reactor fuel type selected for initial evaluation was 93.5% enriched (CRWMS M&O 1998, p. 1).

For the aluminum-clad fuel from research reactors, criticality was evaluated for a range of possible configurations of degraded fuel within a codisposal WP in order to identify the most reactive configurations and determine the minimum amount of neutron absorber required to ensure that the subcritical limit was not exceeded. The worst-case (highest k_{eff}) configuration would have the degraded, or oxidized, homogenized fuel material in the intact inner basket inside the canister with both fissionable and neutron-absorbing material uniformly distributed throughout the container. The calculation of k_{eff} indicated that approximately 1 kg of gadolinium would be required to prevent criticality if stainless steel were used for the basket material; 1.25 kg would be required for carbon steel (CRWMS M&O 1998, p. 69). Based on the analysis of the aluminum-based fuel, which demonstrates that an acceptable design for disposal can be developed, the other DOE fuel types are also expected to be found suitable for disposal.

Immobilized Plutonium–Another waste form that contains fissionable material is the ceramic matrix, which includes plutonium and neutron absorber for criticality control. This waste form is designed so that the type and quantity of neutron absorber included are sufficient to prevent criticality in intact configurations, even if the WP were filled with water. For criticality to occur in or near a WP containing canisters of immobilized plutonium, most of the neutron absorber would have to be separated from the fissionable material (CRWMS M&O 1999g, pp. x, xi, and xii).

The gadolinium in the immobilized plutonium could become soluble if the solution in the WP were to become acidic existed, as well, as a potentially soluble compound, such as gadolinium oxide. Under such acidic conditions, which are very unlikely, the gadolinium could be flushed from the WP (CRWMS M&O 1999g, p. xi). Such a loss of neutron absorber can also be

prevented by using an insoluble gadolinium compound or a more insoluble absorber element, such as hafnium.

4.2.3.3 Conclusions

In summary, the evaluations for a WP having 21 CSNF assemblies from PWRs show that the borated stainless steel interlocking plates adequately control criticality for both low-enriched and MOX fuel. However, a prudent defense-in-depth strategy would suggest that of the CSNF, the PWR SNF with the greatest criticality potential be placed in a WP with a more robust control measure by adding control rods.

The criticality methodology has also been applied to CSNF from BWRs. As with the 21 PWR WP, the nominal 44 BWR WP will have borated stainless steel plates as the primary criticality control measure. Preliminary analysis indicates that the nominal criticality design will accommodate a larger fraction of the 44 BWR CSNF than does the nominal design for the 21-assembly WP for PWRs.

Insoluble neutron absorber, either in the basket internal to the WP (for SNF assemblies) or in the waste form itself, (for non-fuel waste forms) will make internal criticality very unlikely.

4.2.4 Waste Package Thermal Loading

Limiting the WP thermal output to maintain temperatures in much of the repository rock below the boiling point of water enhances the WP performance. To support this thermal loading strategy, thermal limits for the waste forms and emplacement drifts have been established. In order to achieve the thermal limits, a maximum thermal output is set at 11.8 kW for each WP design (Stroupe 2000).

To determine which WP design can thermally accommodate a CSNF assembly, the thermal output for each forecasted assembly is determined at the time of emplacement. Based on the thermal output of an assembly, the appropriate WP can be determined by ensuring that the maximum thermal output limit of 11.8 kW at time of emplacement is not violated, noting that criticality is also accounted for (Stroupe 2000).

Of the five commercial WP designs, the 21 PWR Absorber Plate is the only design that may be limited by the thermal output from the fuel assembly. The average thermal output for the 21 PWR Absorber Plate WP is 11.33 kw only 0.47 kw below the maximum limit. The next highest WP average thermal output is 8.7 kw, well below the maximum limit (Stroupe 2000).

For the CSNF WP designs, with the exception of the 24 BWR Thick Absorber Plate, aluminum thermal shunts are added to provide an efficient means to enhance heat conduction away from the CSNF so that the heat can pass through the walls of the WP. Addition of thermal shunts is a simple and economical method to significantly improve thermal conductance between the center of the WP and the outer edge of the basket, thereby providing a convenient means to keep the temperature of the cladding within the specified limits. Limiting cladding temperatures helps protect the waste form by minimizing damage to the fuel cladding material. Also, the heat radiated from the outer walls of the WPs to the walls of the emplacement drifts will drive off

water in the pores of the host rock and lower the relative humidity inside the drift. Reducing the relative humidity will limit water initially contacting the WPs and slow the rate of corrosion of the WP's outer barrier.

4.2.5 Radiation Levels

Current WP conceptual design configurations are not self-shielding. Worker protection from radiation during emplacement will be accomplished by a shielded transporter and remote handling. Radiation protection during the monitoring phase will be accomplished by restricting access to the emplacement drifts (CRWMS M&O 1999f, p. 33). During the postclosure phase, worker protection from radiation will not be an issue because no workers will be in the repository.

The purpose of shielding analyses is to evaluate the effects of ionizing radiation on personnel, equipment, and materials. For WP shielding, gamma rays and neutrons emitted from the SNF or DHLW are the primary radiation sources. During normal operations at the potential repository, loading and handling of the WPs will be carried out remotely so that personnel will not be exposed to harmful radiation. Shielding analyses for WP designs are performed primarily to assess radiation effects to material and equipment.

Since the WPs are required to contain the waste forms for thousands of years, the WP layers must reduce radiation levels at the WP surface such that radiolysis-enhanced corrosion under aqueous conditions is negligible. Shielding analyses are, hence, carried out to determine the radiation dose rate on the WP surface in order to evaluate the consequence of the radiolytically-induced corrosion.

Shielding evaluations are also performed for equipment to determine radiation exposure during the welding operation of the WP closure lids. Various pieces of monitoring and control equipment, such as the welding heads and camera, will be relatively close to the radiation sources. The results of the shielding evaluation will be used to quantify the shielding necessary for a piece of equipment to function properly at a given location for a required period of time.

Finally, for an unusual event, which could occur during the transport of WPs from the surface facilities to the emplacement drifts or the emplacement of WPs in the drifts, personnel access in the proximity of the WPs may be required. Shielding analyses provide an evaluation of the radiation environment surrounding the WPs so that the safety of the personnel can be assured.

The maximum radial surface dose rate on the axial midplane of the 21 PWR Absorber Plate with average SNF is 337 rem/hr (CRWMS M&O 1999h, p. 12).

4.2.6 Emplacement Pallet

The emplacement pallet, referred to as the support assembly in the VA design, is intended to be emplaced with the WP in the emplacement drift. There would be one emplacement pallet for each WP. The emplacement pallet has two v-shaped supports fabricated from Alloy 22. The two supports are connected by four stainless steel (Type 316 NG) square tubes. The emplacement pallet will be of two different overall lengths, depending on the length of the WP. The shorter emplacement pallet would be used for the 5 DHLW/DOE SNF. Using Alloy 22 for

the supports provides material compatibility with the WP outer barrier as well as long-term corrosion resistance.

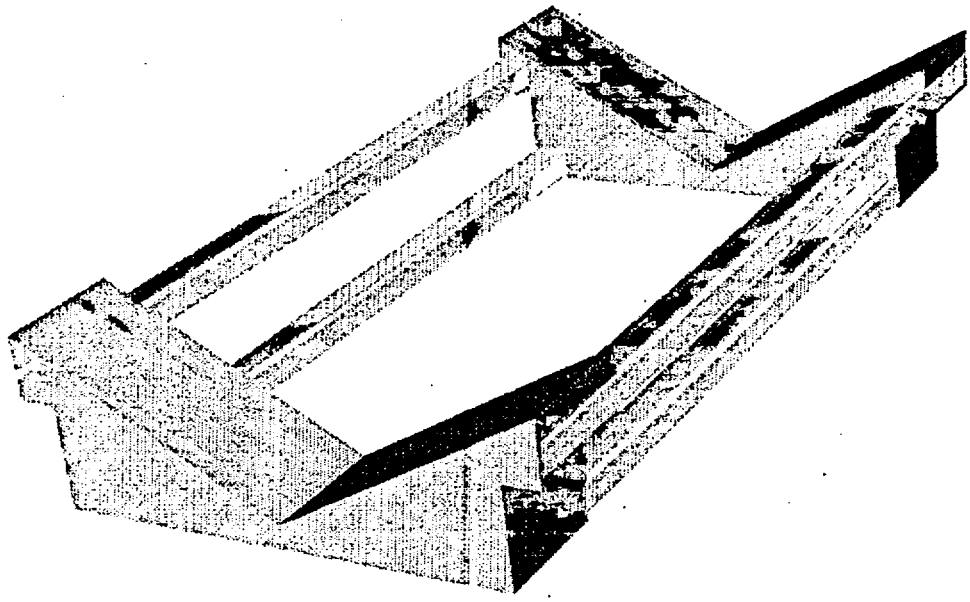

Figure 4-3. Emplacement Pallet

4.2.6.1 Waste Package Support

The WP support is not part of the SR design, The emplacement pallet discussed in Section 4.2.6 replaces the concept of the WP support for the SR design.

4.2.6.2 Waste Package Pier

The WP pier is not part of the SR design, The emplacement pallet discussed in Section 4.2.6 replaces the concept of the WP pier for the SR design.

4.2.6.3 Alternate Design Concept

The emplacement pallet discussed in Section 4.2.6 eliminates the need to address an alternative support/pier design for a steel drift lining.

4.2.7 Drip Shield

The drip shield is a rigid structure that diverts water away from the WPs (CRWMS M&O 1999b, p. 4-17). The drip shield is in sections with one end designed to overlap and interlock with the opposite end of the previously emplaced drip shield section. Once installed, the drip shield is continuous (along the emplacement drift length) and self-supporting (CRWMS M&O 1999b, p.

7-2). The thickness of the drip shield referenced in the EDA II design has been reduced from 20 mm to 15 mm (Stroupe 2000). The drip shield would be installed over the WPs before closure.

4.3 WASTE PACKAGE DESIGNS

For the SR design, the number WP configurations required to handle the anticipated UCF CSNF waste stream has been evaluated and is presented in Tables 6-1 and 6-2.

The specifications (designation for the ASME and unified number system) for the SR WP design materials are as follows:

- Inner Structural Layer – ASME SA-240 (316 NG)
- Outer Barrier – ASME SB-575 N06022 (Alloy 22)
- Carbon Steel Basket Corner Guide - ASME SA-516 K02700 (ASTM A 516 Grade 70)
- Carbon Steel Basket Side Guide - ASME SA-516 K02700 (ASTM A 516 Grade 70)
- Carbon Steel Basket Tube – ASME SA-516 K02700 (ASTM A 516 Grade 70)
- Stainless Steel/Boron Basket Plate - Similar to ASTM A-240, Type 316 but with 1.6 % boron
- Thermal Shunt (Aluminum Plate) – ASME SB-209 A96061-T4
- Control Rods - boron carbide (B_4C) pellets with zirconium clad.

WP fabrication costs have been estimated as part of the design effort. The current estimated costs shown for each specific WP design are in 1998 dollars and are rounded to the nearest $1,000. Details of the WP cost estimates are shown in Tables 4-1 and 4-2 for the SR design. Table 4-3 shows cost estimating details for the SR design emplacement pallet and Table 4-4 shows the cost estimating details for the drip shield used for the SR design.

The material masses and other physical parameters for each WP design is tabulated in Sections 4.3.1 through 4.3.18. Material masses were calculated using the sketches provided in Attachment II and simply adding like alloys together taking into account the quantity required for each component. The WP designs used for SR are specifically noted as "Site Recommendation Design". Tare (empty) masses and loaded masses are rounded to the nearest 1,000 kg.

4.3.1 21 PWR No Neutron Absorber–Viability Assessment Design

This design was removed from the SR WP design configurations.

4.3.2 21 PWR Absorber Plate–Site Recommendation Design

The parameters of this WP are based on sketch SK-0175 REV 02 and are listed below. Neutron-absorber plates are required in the basket of this WP. This WP does contain aluminum thermal shunts.

Outer Diameter (Trunnion Collar Sleeve)	1,664 mm
Outer Length	5,165 mm
Carbon Steel Mass in Disposal Container	5,724 kg
Alloy 22 Mass in DC	6,663 kg
Stainless Steel Mass in DC	11,249 kg
Borated Stainless Steel Mass in DC	2,064 kg
Aluminum Mass (6061) in DC	336 kg
Tare Mass	26,000 kg
Estimated Cost of DC	$ 464,000
Loaded Mass	42,000 kg

4.3.3 21 PWR Control Rods–Site Recommendation Design

The parameters of this WP are based on sketch SK-0175 REV 02 and are listed below. Control rods are required in place of absorber plates. Cost of the control rods is included in the estimated DC cost. This WP does contain aluminum thermal shunts.

Outer Diameter (Trunnion Collar Sleeve)	1,664 mm
Outer Length	5,165 mm
Carbon Steel Mass in DC	7,820 kg
Alloy 22 Mass in DC	6,663 kg
Stainless Steel Mass in DC	11,249 kg
Borated Stainless Steel Mass in DC	0 kg
Aluminum (6061) Mass in DC	336 kg
Tare Mass	26,000 kg
Estimated Cost of DC	$ 505,000
Loaded Mass *	42,000 kg

* Control rods do not add any mass to the WP because they displace the mass of nonfuel components included in the fuel assembly mass.

4.3.4 12 PWR No Neutron Absorber–Viability Assessment Design

This design was removed from the SR WP design configurations.

4.3.5 12 PWR Absorber Plate–Site Recommendation Design

The parameters of this WP are based on sketch SK-0183 REV 00 and are listed below. Neutron-absorber plates are required in the WP basket. This WP does contain aluminum thermal shunts.

Outer Diameter (Trunnion Collar Sleeve)	1,330 mm

Outer Length	5,651 mm
Carbon Steel Mass in DC	4,019 kg
Alloy 22 Mass in DC	5,484 kg
Stainless Steel Mass in DC	8,744 kg
Borated Stainless Steel Mass in DC	1,152 kg
Aluminum (6061) Mass in DC	152 kg
Tare Mass	20,000 kg
Estimated Cost of DC	$ 352,000
Loaded Mass	30,000 kg

4.3.6 44 BWR No Neutron Absorber–Viability Assessment Design

This design was removed from the SR WP design configurations.

4.3.7 44 BWR Absorber Plate–Site Recommendation Design

The parameters of this WP are based on sketch SK-0192 REV 00 and are listed below. Neutron-absorber plates are required in the WP basket. This WP does contain aluminum thermal shunts.

Outer Diameter (Trunnion Collar Sleeve)	1,674 mm
Outer Length	5,165 mm
Carbon Steel Mass in DC	7,245 kg
Alloy 22 Mass in DC	6,812 kg
Stainless Steel Mass in DC	11,531 kg
Borated Stainless Steel Mass in DC	2,152 kg
Aluminum (6061) Mass in DC	336 kg
Tare Mass	28,000 kg
Estimated Cost of DC	$ 478,000
Loaded Mass	43,000 kg

4.3.8 24 BWR Thick Absorber Plate–Site Recommendation Design

The parameters of this WP are based on sketch SK-0184 REV 00 and are listed below. Thick neutron-absorber plates are required in the WP basket. This WP does not contain aluminum thermal shunts.

Outer Diameter (Trunnion Collar Sleeve)	1,318 mm
Outer Length	5,105 mm
Carbon Steel Mass in DC	3,971 kg
Alloy 22 Mass in DC	5,062 kg
Stainless Steel Mass in DC	7,780 kg
Borated Stainless Steel Mass in DC	2,632 kg
Aluminum (6061) Mass in DC	0 kg
Tare Mass	19,000 kg
Estimated Cost of DC	$ 414,000
Loaded Mass	27,000 kg

4.3.9 24 BWR Canistered Fuel–Viability Assessment Design

The "Canistered" designs were removed from the SR WP design configurations.

4.3.10 44 BWR Canistered Fuel–Viability Assessment Design

The "Canistered" designs were removed from the SR WP design configurations.

4.3.11 5 DHLW/DOE SNF–Site Recommendation Design

The parameters of this WP are based on sketch SK-0196 REV 00 and are listed below.

Outer Diameter (Trunnion Collar Sleeve)	2,110 mm
Outer Length	3,590 mm
Carbon Steel Mass in DC	3,805 kg
Alloy 22 Mass in DC	8,260 kg
Stainless Steel Mass in DC	11,296 kg
Tare Mass	23,000 kg
Estimated Cost of DC	$ 365,000
Loaded Mass	38,000 kg

4.3.12 5 DHLW/DOE SNF–Long–Site Recommendation Design

The parameters of this WP are based on sketch SK-0200 REV 01 and are listed below.

Outer Diameter (Trunnion Collar Sleeve)	2,110 mm
Outer Length	5,217 mm
Carbon Steel Mass in DC	5,779 kg
Alloy 22 Mass in DC	10,486 kg
Stainless Steel Mass in DC	16,341 kg
Tare Mass	33,000 kg
Estimated Cost of DC	$ 463,000
Loaded Mass	56,000 kg

4.3.13 Naval SNF Long–Site Recommendation Design

The parameters of this WP are based on sketch SK-0194 REV 01 and are listed below.

Outer Diameter (Trunnion Collar Sleeve)	1,949 mm
Outer Length	6,065 mm
Carbon Steel Mass In DC	0 kg
Alloy 22 Mass in DC	10,594 kg
Stainless Steel Mass in DC	17,411 kg
Tare Mass	28,000 kg
Estimated Cost of DC	$ 491,000
Loaded Mass	72,000 kg

Note: For this EF, the Naval Fuel SNF–Long will be used as the DC for the GTCC and SPAR waste forms.

4.3.14 Large (125-Ton) Canistered Fuel (21 PWR/40 BWR)–Viability Assessment Design

The "Canistered" designs were removed from the SR WP design configurations.

4.3.15 Small (75-Ton) Canistered Fuel (12 PWR/24 BWR)–Viability Assessment Design

The "Canistered" designs were removed from the SR WP design configurations.

4.3.16 DOE Miscellaneous

This design was removed from the SR WP design configurations.

4.3.17 Naval SNF–Site Recommendation Design

The parameters of this WP are based on sketch SK-0203 REV 00 and are listed below.

Outer Diameter (Trunnion Collar Sleeve)	1,949 mm
Outer Length	5,430 mm
Carbon Steel Mass in DC	0 kg
Alloy 22 Mass in DC	9,794 kg
Stainless Steel Mass in DC	16,002 kg
Tare Mass	26,000 kg
Estimated Cost of DC	$ 460,000
Loaded Mass	70,000 kg

4.3.18 2 MCO/2 DHLW–Site Recommendation Design

The parameters of this WP are based on sketch SK-0198 REV 00 and are listed below.

Outer Diameter (Trunnion Collar Sleeve)	1,815 mm
Outer Length	5,217 mm
Carbon Steel Mass in DC	1,142 kg
Alloy 22 Mass in DC	7,502 kg
Stainless Steel Mass in DC	13,200 kg
Tare Mass	22,000 kg
Estimated Cost of DC	$ 384,000
Loaded Mass	48,000 kg

Tables 4-1 and 4-2 provide the cost estimating details used to derive the WP costs. The cost estimates are based on the sketches referenced earlier in this section, reflect 1998 dollars, and include a 20% contingency factor. Table 4-3 is based on sketches SK-0144 REV 01 and SK-0189 REV 00 and provides the estimating details used to derive the emplacement pallet costs. Table 4-4 is based on sketch SK-0148 REV 04 and provides the estimating details used to derive the drip shield costs. The cost estimates for the emplacement pallet and the drip shield are based on 1998 dollars and include a 20% contingency factor.

Table 4-1. Cost Estimating Details–Commercial Spent Nuclear Fuel–Site Recommendation Design

CSNF Waste Packages	21 PWR Absorber Plate	21 PWR Control Rods	12 PWR Absorber Plate	44 BWR Absorber Plate	24 BWR Thick Absorber Plate
Total Fabrication Hours	853	863.5	849	832	799.5
Labor Cost @ $70/hr	$59,710	$60,445	$59,430	$58,240	$55,965
Furnace Hours	48	48	48	48	48
Furnace Cost @ $120/hr	$5,760	$5,760	$5,760	$5,760	$5,760
Subtotal: Labor + Furnace	$65,470	$66,205	$65,190	$64,000	$61,725
Material Cost (including weld metal)	$250,039	$277,643	$173,082	$261,496	$219,596
Transportation	$6,500	$6,500	$6,500	$6,500	$6,500
Subtotal	$322,009	$350,348	$244,772	$331,996	$287,821
Other[a]	$64,402	$70,070	$48,954	$66,399	$57,564
Subtotal	$386,411	$420,418	$293,726	$398,395	$345,385
Contingency	$77,282	$84,084	$58,745	$79,679	$69,077
Total Estimated Cost	$463,693	$504,502	$352,471	$478,074	$414,462
Total Estimated Cost (rounded)	$464,000	$505,000	$352,000	$478,000	$414,000

NOTE: [a]Other includes such costs as equipment, office, temporary facilities, supplies, profit, and administration.

Table 4-2. Cost Estimating Details–DOE-Owned Waste Forms–Site Recommendation Design

DOE-Owned Waste Forms Waste Packages	5 DHLW/DOE SNF	5 DHLW/DOE SNF - Long	Naval SNF	Naval SNF - Long	2 MCO/2 DHLW
Total Fabrication Hours	728.5	793.5	793.5	814.5	793.5
Labor Cost @ $70/hr	$50,995	$55,545	$55,545	$57,015	$55,545
Furnace Hours	48	48	48	48	48
Furnace Cost @ $120/hr	$5,760	$5,760	$5,760	$5,760	$5,760
Subtotal: Labor + Furnace	$56,755	$61,305	$61,305	$62,775	$61,305
Material Cost (including weld metal)	$190,033	$253,664	$251,308	$271,866	$198,994
Transportation	$6,500	$6,500	$6,500	$6,500	$6,500
Subtotal	$253,288	$321,469	$319,113	$341,141	$266,799
Other[a]	$50,658	$64,294	$63,823	$68,228	$53,360

DOE-Owned Waste Forms Waste Packages	5 DHLW/DOE SNF	5 DHLW/DOE SNF - Long	Naval SNF	Naval SNF - Long	2 MCO/2 DHLW
Subtotal	$303,946	$385,763	$382,936	$409,369	$320,159
Contingency	$60,789	$77,153	$76,587	$81,874	$64,032
Total Estimated Cost	$364,735	$462,916	$459,523	$491,243	$384,191
Total Estimated Cost (rounded)	$365,000	$463,000	$460,000	$491,000	$384,000

NOTE: [a]Other includes such costs as equipment, office, temporary facilities, supplies, profit, and administration.

Table 4-3. Cost Estimating Details–Emplacement Pallet –Site Recommendation Design

Emplacement Pallets	Regular Length	Short Length
Total Fabrication Hours	150	150
Labor Cost @ $70/hr	$10,500	$10,500
Material Cost (including weld metal)	$33,503	$32,505
Transportation	$5,000	$5,000
Subtotal	$49,003	$48,005
Other[a]	$9,801	$9,601
Subtotal	$58,804	$57,606
Contingency	$11,761	$11,521
Total Estimated Cost	$70,565	$69,127
Total Estimated Cost (rounded)	$71,000	$69,000

NOTE: [a]Other includes such costs as equipment, office, temporary facilities, supplies, profit, and administration.

Table 4-4. Cost Estimating Details–Drip Shield–Site Recommendation Design

Drip Shield	Section Estimate
Total Fabrication Hours	304.5
Labor Cost @ $70/hr	$21,315
Furnace Hours	26
Furnace Cost @ $120/hr	$3,120
Subtotal: Labor + Furnace	$24,435
Material Cost (including weld metal)	$194,783
Transportation	$6,500
Subtotal	$225,718
Other[a]	$45,144
Subtotal	$270,862
Contingency	$54,172
Total Estimated Cost	$325,034
Total Estimated Cost per Meter[b]	$58,990
Total Estimated Cost (rounded)	$325,000

Total Estimated Cost per Meter (rounded)[b]	$59,000

NOTES: [a]Other includes such costs as equipment, office, temporary facilities, supplies, profit, and administration.
[b]Cost per meter based on 5.51 meters coverage per drip shield section.

5. IMPACTS OF ALTERNATIVES, OPTIONS, AND MODULES

5.1 WASTE FORM/TRANSPORTATION OPTIONS

One CSNF waste form will be addressed in this supplement for the SR design. The CSNF is received at the repository in either DPCs or as UCF, each shipped in appropriate transportation casks. This option is referred to as DPC/UCF. The transportation options do not impact the information in this EF.

5.2 DOE-OWNED WASTE FORMS

The DHLW/DOE SNF (including GTCC and SPAR) canisters will be shipped to the repository in DISPCs (some DOE-owned may arrive as UCF).

Note: The DHLW in Inventory Modules 1 and 2 can be further subdivided into two sub-modules. The first sub-module contains 22,147 canisters of DHLW including 18 metric tons of immobilized plutonium and 32 metric tons of MOX CSNF. The second sub-module contains 22,280 canisters of DHLW including 50 metric tons of immobilized plutonium and 0 metric tons of MOX CSNF (DOE 1999, p. A-37). Because the MOX CSNF replaces other CSNF, the amount of MOX CSNF does not change the quantity of CSNF WPs. To provide the most complete information, Inventory Modules 1 and 2 as well as the estimated quantities in Section 6 will include information based on DHLW containing 18 metric tons of immobilized plutonium as well as DHLW containing 50 metric tons of immobilized plutonium.

5.3 ENGINEERED BARRIER SEGMENT/WASTE PACKAGE EVALUATION CASES

The SR design will include one evaluation case. The case is DPC/UCF CSNF with DHLW/DOE SNF for each of the inventory modules (Base Case, Module 1 [with 50 metric tons of immobilized plutonium] and Module 2 [with 50 metric tons of immobilized plutonium]). For completeness of this EF, the WP quantities and related information for 18 metric tons of immobilized plutonium will also be provided.

5.4 AREAL MASS LOADING

The SR design will address one areal mass loading of 60 MTHM/acre relative to the WPs. This is provided by CSNF blending, line-loaded (10 cm spacing) WPs, and a drift spacing of 81 m (CRWMS M&O 1999b, p. 5-44).

5.5 WASTE PACKAGE EMPLACEMENT PALLET EVALUATION CASES

The SR design will address one waste form option, one areal mass loading (60 MTHM/acre), one emplacement pallet positioning variation (one emplacement pallet per WP), and each of the inventory modules (Base Case, Module 1 [with 50 metric tons of immobilized plutonium] and Module 2 [with 50 metric tons of immobilized plutonium]). For completeness of this EF, the WP and emplacement pallet quantities and related information for 18 metric tons of immobilized plutonium will also be provided.

INTENTIONALLY LEFT BLANK

6. ENVIRONMENTAL INFORMATION

6.1 ENGINEERED BARRIER SEGMENT/WASTE PACKAGE PROCUREMENT AND FABRICATION

6.1.1 Disposal Container Fabrication and Closure

For the SR design, it is expected that the DCs and separate top closure lids will be procured complete from sources beyond the site of the repository. The DC fabrication concept described is for an UCF–WP. The fabrication for other container designs is expected to be similar, varying only in size. The UCF–WP also has an internal basket assembly to support the fuel assemblies, and the DHLW/DOE SNF–WP has an internal structure to arrange and support the waste-containing canisters. The fabrication discussion below is provided for information. The intent is to show that the DC can be manufactured by conventional means (CRWMS M&O 2000a, p. 4). It is very likely that the fabricator(s) will adjust the manufacturing and inspection processes to suit their own capabilities (subject to purchaser procurement specification restrictions).

The SR–WP design consists of an outer cylinder of Alloy 22, 20 mm thick, however, due to larger size and weight, some WP designs will have a 25-mm-thick outer shell. The inner reinforcement cylinder serves as an internal structural support to the outer cylinder and is 316 NG stainless steel, 50 mm thick. There are lids on each end of the cylinder. The outer lids are Alloy 22, with a thickness of 25 mm. The inner lids are 316 NG stainless steel, with a thickness that varies from 65 mm to 130 mm, depending on the DC. In addition to the inner and outer lids, a 10-mm Alloy 22 lid in between the outer and inner lid on the top end of the WP provides additional protection against stress corrosion cracking in the closure weld area of the WP. The bottom lids are installed at the fabricator's shop and the top lids are shipped as separate parts.

Forming the outer cylinder of rolled and welded plate requires two half-length cylinders due to the limitation of most, if not all, rolling fabricators. The plate would be ordered with extra thickness to permit machining (for rounding) after welding. Once received by the fabricator, the plate would be receipt inspected, laid out to establish the developed length, and thermally cut to the layout. The plate would then be rolled to size (CRWMS M&O 2000a, p. 13).

The cylinder would then be adjusted to meet the required diameter and inside travel (inner circumference) taking into consideration the subsequent weld shrinkage of the longitudinal seam. The long seam preparations would then be machined and prepared for welding. The cylinder would then be strutted to minimize the weld distortion and welded by one of several permitted, qualified welding processes which would include shielded metal-arc, gas tungsten-arc (manual and automatic), and gas metal-arc (semi and automatic) (CRWMS M&O 2000a, pp. 13, 7, and 8). All filler material would be selected to be compatible with the base material and suitably qualified. Filler materials for stainless steels shall be selected and controlled such that the delta ferrite content in the as-deposited weld filler metal as indicated by a ferrite number between 5 and 15. Welding methods and procedures shall be developed to specifically minimize the volume of sensitized material (CRWMS M&O 2000a, p. 6). The struts would then be removed and the weld seam prepared for nondestructive examination (NDE) that would include radiographic (RT), ultrasonic (UT), and liquid penetrant (PT) testing. One end of the cylinder

would be prepared for circumferential seam welding. In parallel with this, a second cylinder would be prepared in the same manner (CRWMS M&O 2000a, p. 13).

The two cylinders would then be joined and circumferentially welded by one of the permitted processes with subsequent NDE (RT, UT, and PT) testing performed on the circumferential seam. The outer cylinder would then be inspected to verify that inside diameter is within tolerance. The inside of the cylinder would then be machined as described below (CRWMS M&O 2000a, p. 13).

To make the inner cylinder, two plates of 316 NG stainless steel approximately 64 mm thick would be ordered to the dimensions sufficient for each to make one half of the inner cylinder length. The full cylinder length would thus require two plates. Each plate would be cut and/or machined for size and longitudinal weld preparations. The plates would then be roll formed to make two half-cylinders and welded with one of the permitted processes, with subsequent NDE (RT, UT, and PT) inspections performed. The weld preparations for the circumferential seam would then be machined and the cylinder would be assembled and circumferentially welded with one of the permitted processes. NDE (RT, UT, and PT) inspections would be performed on the circumferential weld and the cylinder would then be machined for assembly (CRWMS M&O 2000a, p. 14).

The outer cylinder lids would be fabricated from 25 mm thick Alloy 22 plate. The plates would be thermal cut to the correct diameter and edges cleaned to remove slag and scale. Both lids would then be machined to establish the weld preparations. The 10 mm Alloy 22 lid that goes in between the outer and inner lids on the top end of the cylinder would be fabricated in a similar manner. The inner cylinder lids would be fabricated from a 316 stainless steel plate of a thickness to match the type of DC. The plate would be laid out for thermal cutting two circles. The plates would then be thermal cut to the correct diameter and edges cleaned to remove slag and scale. Both lids are then machined to establish the weld preparation (CRWMS M&O 2000a, p. 14).

To complete the outer lid assembly for the top of the WP, an extended outer shell lid base is required. The base would likely be machined from stock that is rolled, welded, subjected to NDE (RT, UT, and PT) inspections, and then machined. The outer lid for the upper end of the cylinder is positioned inside the base and welded. After the outer lid lifting feature is welded on the top of the lid, the assembly is subjected to NDE (RT, UT, and PT) inspections, and then annealed. The parameters for the annealing operation are still being developed but at this time it appears that the assembly will be heated in a furnace and then water quenched. Final machining of the assembly to assure proper fit with the outer cylinder is then performed.

The upper and lower trunnion collar sleeves are required to be welded on the outer cylinder to facilitate handling of the WP. The sleeves are likely machined from stock that is rolled into rough rings, welded, and subjected to NDE (RT, UT, and PT) inspections. Once machined, the sleeves are welded in position on the upper and lower ends of the outer cylinder.

A support ring is required to hold the inner cylinder in place once it is assembled into the outer cylinder. The ring is made from 20 mm thick plate. A piece is cut, rolled into a ring, and weld preparations are machined on both sides. The ring is fit to the inside of the cylinder at the

bottom end and welded. The long seam weld in the ring is made at the same time to facilitate the fitting of the ring. The ring welds are then ground flush to allow the bottom lid to set on the bottom of the ring and the inner cylinder to set on the top of the ring. The ground areas are then PT inspected (CRWMS M&O 2000a, pp. 14 and 15).

Once the inner and outer cylinders are complete, the bottom lids must be welded in place. The assemblies would be set in the vertical position and the lids assembled to each cylinder. The weld process could be submerged arc, gas metal-arc, or gas tungsten-arc welding for the inner reinforcement lid and gas metal-arc or gas tungsten-arc for the outer cylinder. After the welding is complete, the inner and outer lid seam would be prepared and RT, UT, and PT inspected. RT and UT inspection is required to assure all detectable flaws, regardless of their orientation, are identified. PT inspection is required to assure that surface indications are identified (CRWMS M&O 2000a, p. 15).

The outer barrier will be annealed. The parameters for the annealing operation are still being developed but at this time it is conceived that the cylinder assembly will be heated in a furnace and then water quenched (CRWMS M&O 2000a, p. 15).

The loose fit cylinder within a cylinder construction requires that the surfaces of the inner reinforcement cylinder and outer barrier be machined to close tolerances. Loose fit being defined as 0 to 4 mm gap between the cylinders. Choice of machined dimensions for the diameters, so as to achieve the prescribed loose fit, depends on how the diametrical loose fit value is allocated between the two cylinders (e.g., a 50-50 split, etc.). The outer barrier and the reinforcement cylinder finished thicknesses must not be less than the prescribed minimum values (e.g., 20 mm, 50 mm) and the inner diameter of the reinforcement cylinder must be maintained at the design value. After both the outer and reinforcement cylinders have been machined, they must be fit together. The outer cylinder is heated to approximately 700°F (371°C) to allow the inner reinforcement cylinder to be lowered into the outer cylinder. The heat is then removed and the cylinders are allowed to cool (CRWMS M&O 2000a, pp. 15 and 16).

The top container weld preparations would then be machined for the closure welds to be conducted at a later time at the repository surface facility.

Depending on the configuration of the specific WP (e.g., 21 PWR Absorber Plate, 5 DHLW/DOE SNF, 44 BWR Absorber Plate), the appropriate basket components would be assembled and inserted in the DC. Fuel basket tubes would be square A516 carbon steel Grade 70 tubes approximately 5 mm thick. The top of the tube needs to be flared to facilitate the insertion of the fuel assembly. This can be done by the tube manufacturer or the fabricator of the DC. Internal separator plates would be made from Neutronit A 978 (A 516 carbon steel for the basket used in the 21 PWR Control Rods) and are simple slotted plates with no forming or joining required. The thermal shunts, when required, would be made from SB-209 A96061 T4 plate, also slotted with no forming or joining required. The internal side guide is part of the basket support structure. These parts would be made from A516 carbon steel Grade 70 plate. These plates would be beveled on the long edges to fit the curvature of the container ID. Stiffener plates (also A516 carbon steel) would then be welded on the side guides to strengthen them. The basket internal corner guide piece would be made from a flat A516 carbon steel Grade 70 plate. The plate would be cut to size and beveled on the long edge. The plate could be

thermal cut or sheared. The method of cutting would depend on the equipment available at the fabricator. Either of these methods would be acceptable. The plate would then be put in a press brake and pressed into a 90° angle along the long dimension. Stiffener plates (also A516 carbon steel) would also be welded on the corner guides for strength (CRWMS M&O 2000a, p. 16).

Once the inner and outer cylinders and the bottom lids are assembled, the container is ready for the internals to be added. Once the cylinder is ready, the internal parts would be assembled to the inside. The cylinder would be laid out to establish the locations of the internal corner guide and internal side guides assemblies. The corner guide assemblies and the side guide assemblies would be put in place and welded using manual gas tungsten arc welding. The bottom set of plates (the first of four sets) would be installed in an interlocking fashion followed by the three additional sets. The tubes would be inserted and the tube tops stitch welded together if required (CRWMS M&O 2000a, p. 17).

The 5 DHLW/DOE SNF designs include a centrally located full-length tube supported by five full-length, radially oriented divider plates. Inner bracket plates are used to connect the divider plates to the support tube for structural purposes. Similarly, outer bracket plates are used to connect the divider plate to the DC inner structural material, also for structural purposes. This assembly forms a ring of five compartments or cells sized to accommodate five glass pour canisters. The central space within the DC, surrounded by the pour glass canisters, is sized to accommodate the DOE SNF canister. This is expected to be a one-piece assembly and would therefore be lifted and then lowered into the DC as a singular unit (CRWMS M&O 2000a, p. 17).

The DC and the top lids would then be cleaned, wrapped, and protected for the shipment to the surface facility for storage until they are ready to be filled and sealed (CRWMS M&O 2000a, p. 17).

6.1.2 Emplacement Pallet

It is expected that the emplacement pallets will be procured complete from sources beyond the site of the repository. The emplacement pallet has two v-shaped supports connected by four stainless steel square tubes. The four stainless steel square tubes are fabricated from Type 316 NG stainless steel and are cut to length. The v-shaped supports are fabricated from Alloy 22 plates and rectangular tubing. The Alloy 22 components are flame cut and assembled with the stainless steel square tubes by welding (CRWMS M&O 2000a, pp. 18 and 19). There is one emplacement pallet for each WP. There are two different overall lengths depending on the length of the WP. The short emplacement pallet is intended for use with the 5 DHLW/DOE SNF. The longer emplacement pallet is intended for use with the rest of the WP types. The short emplacement pallet contains approximately 1,420 kg of Alloy 22 and 408 kg of stainless steel (sketch SK-0189 REV 00). The longer emplacement pallet contains approximately 1,420 kg of Alloy 22 and 684 kg of stainless steel (sketch SK-0144 REV 01).

6.1.3 Drip Shield

It is expected that the drip shield will be procured complete from sources beyond the site of the repository. The drip shield is in sections with one end designed to overlap and interlock with the opposite end of the previously emplaced drip shield section. The drip shield sections are self-

supporting and, once installed, the drip shield is continuous in the emplacement drift. Individual drip shield sections are fabricated by welding from titanium alloy, SB-265, R52400 (Grade 7) (CRWMS M&O 1999b, p. 7-2 and p. D-4). The drip shield is 15 mm thick. The bottoms of the two drip shield side plates (where the drip shield contacts the invert) are reinforced with Alloy 22. For a typical drip shield section length of 6,105 mm (coverage of 5510 mm), the drip shield would contain approximately 3,264 kg of SB-265 R52400 titanium Grade 7, approximately 829 kg of SB-265 R56400 titanium Grade 24, and approximately 110 kg of Alloy 22. This results in mass per meter amounts (rounded) of: approximately 592 kg of titanium Grade 7, approximately 150 kg of titanium Grade 24, and approximately 20 kg of Alloy 22.

6.2 ENGINEERED BARRIER SEGMENT/WASTE PACKAGE MATERIAL AND QUANTITIES

In order to estimate the total material mass use for the WPs, the number of WPs needed for the Base Case and Inventory Modules 1 and 2 must be determined. The number of WPs relies on the order in which fuel will be accepted at the repository at a given time. Because of this uncertainty, it was necessary to examine a variety of fuel selection methodologies to determine the impacts of changing the selection assumptions. Five cases were selected to provide the necessary variability. For the purpose of estimating the number of WPs, Case A was chosen as the scenario to use for the fuel selection. In Case A, fuel selection begins with 10-year old fuel (CRWMS M&O 2000e, p. 18).

In addition, for the Base Case, the WP loading is undetermined for the excess DOE-owned, as there is not enough DHLW to co-dispose all of the DOE-owned. It is assumed that this excess DOE-owned will be one DOE-owned canister/WP. This is conservative as it results in a higher estimate of both WP costs and material usage.

The estimated number of WPs and associated total material mass use is provided in the following tables. The sketches referenced in Section 4 and included in Attachment II, provide the basis for the estimates. Essentially, the material mass for each like alloy for the respective WP components are added and then each respective total alloy mass is multiplied by the number of estimated WPs. This is repeated for all ten WP designs, the drip shield and the emplacement pallet for each of the modules. Because of the rounding of the material masses on the sketches, the total mass may not always reflect that of the individual components.

Tables 6-1 and 6-2 provide the number of WPs that will be required to support the Base Case and the DPC/UCF waste form option. The Base Case includes 18 MTHM of immobilized plutonium in the DHLW. The material masses and estimated costs for each WP design are given in Tables 6-3 and 6-4, respectively.

Table 6-1. Commercial Spent Nuclear Fuel Waste Package Quantities–Base Case–Site Recommendation Design

WP Type	WP Quantities
21 PWR Absorber Plate	4,299
21 PWR Control Rods	95
12 PWR Absorber Plate–Long	163

WP Type	WP Quantities
44 BWR Absorber Plate	2,831
24 BWR Thick Absorber Plate	84
CSNF Total	7,472

Source: (CRWMS M&O 2000e, Table 10)

Table 6-2. DOE-Owned Waste Forms Waste Package Quantities–Base Case–Immobilized Plutonium (18 MTHM)–Site Recommendation Design

WP Type	WP Quantities
5 DHLW/DOE SNF	1,592
5 DHLW/DOE SNF–Long	1,751
Naval SNF	200
Naval SNF–Long	100
2 MCO/2 DHLW	186
DOE-Owned Waste Form Total	3,829

6.2.1 Waste Package Estimates for Base Case–Site Recommendation Design

Table 6-3. Total Material Mass Used in Waste Packages–Base Case–Site Recommendation Design

WP Type	WP Qty.	Alloy 22 (kg)	Stainless Steel (316) (kg)	A 516 (kg)	SS–B (kg)	Al (6061) (kg)
21 PWR Absorber Plate	4,299	28,644,237	48,359,451	24,607,476	8,873,136	1,444,464
21 PWR Control Rods	95	632,985	1,068,655	742,900	0	31,920
12 PWR Absorber Plate	163	893,892	1,425,272	655,097	187,776	24,776
44 BWR Absorber Plate	2,831	19,284,772	32,644,261	20,510,595	6,092,312	951,216
24 BWR Thick Absorber Plate	84	425,208	653,520	333,564	221,088	0
5 DHLW/DOE SNF	1,592	13,149,920	17,983,232	6,057,560	0	0
5 DHLW/DOE SNF–Long	1,751	18,360,986	28,613,091	10,119,029	0	0
Naval SNF	200	1,958,800	3,200,400	0	0	0
Naval SNF–Long	100	1,059,400	1,741,100	0	0	0
2 MCO/2 DHLW	186	1,395,372	2,455,200	212,412	0	0
Totals	11,301	85,805,572	138,144,182	63,238,633	15,374,312	2,452,376

Table 6-4. Total Estimated Cost (1998 $) of Waste Packages–Base Case–Site Recommendation Design

WP Type	Est. Unit Cost	WP Qty.	Total WP Est. Cost
21 PWR Absorber Plate	$464,000	4,299	$1,994,736,000
21 PWR Control Rods	$505,000	95	$47,975,000

WP Type	Est. Unit Cost	WP Qty.	Total WP Est. Cost
12 PWR Absorber Plate	$352,000	163	$57,376,000
44 BWR Absorber Plate	$478,000	2,831	$1,353,218,000
24 BWR Thick Absorber Plate	$414,000	84	$34,776,000
5 DHLW/DOE SNF	$365,000	1,592	$581,080,000
5 DHLW /DOE SNF—Long	$463,000	1,751	$810,713,000
Naval SNF	$460,000	200	$92,000,000
Naval SNF—Long	$491,000	100	$49,100,000
2 MCO/2DHLW	$384,000	186	$71,424,000
Total Estimated Cost		11,301	$5,092,398,000

6.2.2 Waste Package Estimates for Inventory Module 1–Site Recommendation Design

Inventory Module 1 is the Base Case Inventory Module plus the remainder of DHLW and the remainder of CSNF. For the purposes of this EF, the total commercial inventory is assumed to be 105,414 MTHM.

The DHLW in Inventory Module 1 can be further subdivided into two sub-modules. The first sub-module contains 22,147 canisters of DHLW including 18 metric tons of immobilized plutonium and 32 metric tons of MOX CSNF. The second sub-module contains 22,280 canisters of DHLW including 50 metric tons of immobilized plutonium and 0 metric tons of MOX CSNF. Because the MOX CSNF replaces other CSNF, the amount of MOX CSNF does not change the quantity of CSNF WPs. To bound the number of WPs in this EF, Inventory Module 1 will be based on DHLW containing 50 metric tons of immobilized plutonium. For completeness of this EF, the WP quantities for 18 metric tons of immobilized plutonium will also be provided in the tables.

Tables 6-5 and 6-6 provide the number of WPs that will be required to support Inventory Module 1 and the DPC/UCF waste form option for both 50 MTHM of immobilized plutonium and 18 MTHM of immobilized plutonium in the DHLW. The total material masses and estimated costs for each WP design are given in Tables 6-7, 6-8, and 6-9, respectively.

Table 6-5. Commercial Spent Nuclear Fuel Waste Package Quantities Inventory Module 1–Site Recommendation Design

WP Type	WP Quantities
21 PWR Absorber Pate	6,733
21 PWR Control Rods	114
12 PWR Absorber Plate	390

WP Type	WP Quantities
44 BWR Absorber Plate	4,408
24 BWR Thick Absorber Plate	109
CSNF Total	11,754

Table 6-6. DOE-Owned Waste Form Waste Package Quantities–Inventory Module 1–Site Recommendation Design

WP Type	WP Quantities 50 MTHM Immobilized Pu	WP Quantities 18 MTHM Immobilized Pu
5 DHLW/DOE SNF	1,557	1,530
5 DHLW/DOE SNF–Long	2,821	2,821
Naval SNF	200	200
Naval SNF–Long	100	100
2 MCO/2DHLW	199	199
DHLW Total	4,877	4,850

Table 6-7. Total Material Mass Used in Waste Packages–Inventory Module 1–Immobilized Plutonium (50 MTHM)–Site Recommendation Design

WP Type	WP Qty.	Alloy 22 (kg)	Stainless Steel (316) (kg)	A 516 (kg)	SS-B (kg)	Al (6061) (kg)
21 PWR Absorber Plate	6,733	44,861,979	75,739,517	38,539,692	13,896,912	2,262,288
21 PWR Control Rods	114	759,582	1,282,386	891,480	0	38,304
12 PWR Absorber Plate	390	2,138,760	3,410,160	1,567,410	449,280	59,280
44 BWR Absorber Plate	4,408	30,027,296	50,828,648	31,935,960	9,486,016	1,481,088
24 BWR Thick Absorber Plate	109	551,758	848,020	432,839	286,888	0
5 DHLW/DOE SNF	1,557	12,860,820	17,587,872	5,924,385	0	0
5 DHLW/DOE SNF–Long	2,821	29,581,006	46,097,961	16,302,559	0	0
Naval SNF	200	1,958,800	3,200,400	0	0	0
Naval SNF–Long	100	1,059,400	1,741,100	0	0	0
2MCO/2 DHLW	199	1,492,898	2,626,800	227,258	0	0
Totals	16,631	125,292,299	203,362,864	95,821,583	24,119,096	3,840,960

Table 6-8. Total Material Mass Used in Waste Packages–Inventory Module 1–Immobilized Plutonium (18 MTHM)–Site Recommendation Design

WP Type	WP Qty.	Alloy 22 (kg)	Stainless Steel (316) (kg)	A 516 (kg)	SS–B (kg)	Al (6061) (kg)
21 PWR Absorber Plate	6,733	44,861,979	75,739,517	38,539,692	13,896,912	2,262,288
21 PWR Control Rods	114	759,582	1,282,386	891,480	0	38,304
12 PWR Absorber Plate	390	2,138,760	3,410,160	1,567,410	449,280	59,280
44 BWR Absorber Plate	4,408	30,029,296	50,828,648	31,935,960	9,486,016	1,481,088
24 BWR Thick Absorber Plate	109	551,758	848,020	432,839	286,888	0
5 DHLW/DOE SNF	1,530	12,637,800	17,282,880	5,821,650	0	0
5 DHLW/DOE SNF–Long	2,821	29,581,006	46,097,961	16,302,559	0	0
Naval SNF	200	1,958,800	3,200,400	0	0	0
Naval SNF–Long	100	1,059,400	1,741,100	0	0	0
2 MCO/2 DHLW	199	1,492,898	2,626,800	227,258	0	0
Totals	16,604	125,069,279	203,057,872	95,718,848	24,119,096	3,840,960

Table 6-9. Total Estimated Cost (1998 $) of Waste Packages–Inventory Module 1–Site Recommendation Design

WP Type	Est. Unit Cost	WP Qty. 50 MTHM Imm. Pu	Total WP Est. Cost 50 MTHM Imm. Pu	WP Qty. 18 MTHM Imm. Pu	Total WP Est. Cost 18 MTHM Imm. Pu
21 PWR Absorber Plate	$464,000	6,733	$3,124,112,000	6,733	$3,124,112,000
21 PWR Control Rods	$505,000	114	$57,570,000	114	$57,570,000
12 PWR Absorber Plate	$352,000	390	$137,280,000	390	$137,280,000
44 BWR Absorber Plate	$478,000	4,408	$2,107,024,000	4,408	$2,107,024,000
24 BWR Thick Absorber Plate	$414,000	109	$45,126,000	109	$45,126,000
5 DHLW/DOE SNF	$365,000	1,557	$568,305,000	1,530	$558,450,000
5 DHLW/DOE SNF–Long	$463,000	2,821	$1,306,123,000	2,821	$1,306,123,000
Naval SNF	$460,000	200	$92,000,000	200	$92,000,000
Naval SNF–Long	$491,000	100	$49,100,000	100	$49,100,000
2 MCO/2 DHLW	$384,000	199	$76,416,000	199	$76,416,000
Totals		16,631	$7,563,056,000	16,604	$7,553,201,000

6.2.3 Waste Package Estimates for Inventory Module 2–Site Recommendation Design

Inventory Module 2 adds 2,010 cubic meters of GTCC and 4,000 cubic meters of SPAR waste to Inventory Module 1 (DOE 1999, p. A-57 & p. A-59).

The DHLW in Inventory Module 2 can be further subdivided into two sub-modules. The first sub-module contains 22,147 canisters of DHLW including 18 metric tons of immobilized plutonium and 32 metric tons of MOX CSNF. The second sub-module contains 22,280 canisters of DHLW including 50 metric tons of immobilized plutonium and 0 metric tons of MOX CSNF. Because the MOX CSNF replaces other CSNF, the amount of MOX CSNF does not change the quantity of CSNF WPs. To bound the number of WPs in this EF, Inventory Module 2 will be based on DHLW containing 50 metric tons of immobilized plutonium. For completeness of this EF, the WP quantities for 18 metric tons of immobilized plutonium will also be provided in the tables.

The CSNF WP quantities and DHLW/DOE SNF WP quantities provided in Table 6-5 and Table 6-6, respectively, are used for Inventory Module 2.

The Naval SNF–Long WP, for estimating purposes, was used for the GTCC and SPAR waste. The WP quantities are estimated to be a total of 601 for the 6,010 cubic meters of GTCC and SPAR waste. The Naval SNF–Long WP contains 17,411 kg of Type 316 NG stainless steel, and 10,594 kg of a nickel base alloy. Estimated cost (1998 $) is $491,000.

Tables 6-10 and 6-11 provide the material masses and Table 6-12 provide the estimated costs for Inventory Module 2 and the DPC/UCF waste form option.

Table 6-10. Total Material Mass Used in Waste Packages–Inventory Module 2–Immobilized Plutonium (50 MTHM)–Site Recommendation Design

WP Type	WP Qty.	Alloy 22 (kg)	Stainless Steel (316) (kg)	A 516 (kg)	SS–B (kg)	Al (6061) (kg)
21 PWR Absorber Plate	6,733	44,861,979	75,739,517	38,539,692	13,896,912	2,262,288
21 PWR Control Rods	114	759,582	1,282,386	891,480	0	38,304
12 PWR Absorber Plate	390	2,138,760	3,410,160	1,567,410	449,280	59,280
44 BWR Absorber Plate	4,408	30,027,296	50,828,648	31,935,960	9,486,016	1,481,088
24 BWR Thick Absorber Plate	109	551,758	848,020	432,839	286,888	0
5 DHLW/DOE SNF	1,557	12,860,820	17,587,872	5,924,385	0	0
5 DHLW/DOE SNF–Long	2,821	29,581,006	46,097,961	16,302,559	0	0
Naval SNF	200	1,958,800	3,200,400	0	0	0

WP Type	WP Qty.	Alloy 22 (kg)	Stainless Steel (316) (kg)	A 516 (kg)	SS-B (kg)	Al (6061) (kg)
Naval SNF-Long	100	1,059,400	1,741,100	0	0	0
2MCO/2 DHLW	199	1,492,898	2,626,800	227,258	0	0
GTCC/SPAR (Naval SNF-Long)	601	6,366,994	10,464,011	0	0	0
Totals	17,232	131,659,293	213,826,875	95,821,583	24,119,096	3,840,960

Table 6-11. Total Material Mass Used in Waste Packages–Inventory Module 2–Immobilized Plutonium (18 MTHM)–Site Recommendation Design

WP Type	WP Qty.	Alloy 22 (kg)	Stainless Steel (316) (kg)	A 516 (kg)	SS-B (kg)	Al (6061) (kg)
21 PWR Absorber Plate	6,733	44,861,979	75,739,517	38,539,692	13,896,912	2,262,288
21 PWR Control Rods	114	759,582	1,282,386	891,480	0	38,304
12 PWR Absorber Plate	390	2,138,760	3,410,160	1,567,410	449,280	59,280
44 BWR Absorber Plate	4,408	30,027,296	50,828,648	31,935,960	9,486,016	1,481,088
24 BWR Thick Absorber Plate	109	551,758	848,020	432,839	286,888	0
5 DHLW/DOE SNF	1,530	12,637,800	17,282,880	5,821,650	0	0
5 DHLW/DOE SNF-Long	2,821	29,581,006	46,097,961	16,302,559	0	0
Naval SNF	200	1,958,800	3,200,400	0	0	0
Naval SNF-Long	100	1,059,400	1,741,100	0	0	0
2 MCO/2 DHLW	199	1,492,898	2,626,800	227,258	0	0
GTCC/SPAR (Naval SNF-Long)	601	6,366,994	10,464,011	0	0	0
Totals	17,205	131,436,273	213,521,883	95,718,848	24,119,096	3,840,960

Table 6-12. Total Estimated Cost (1998 $) of Waste Packages–Inventory Module 2–Site Recommendation Design

WP Type	Est. Unit Cost	WP Qty. 50 MTHM Imm. Pu	Total WP Est. Cost 50 MTHM Imm. Pu	WP Qty. 18 MTHM Imm. Pu	Total WP Est. Cost 18 MTHM Imm. Pu
21 PWR Absorber Plate	$464,000	6,733	$3,124,112,000	6,733	$3,124,112,000

WP Type	Est. Unit Cost	WP Qty. 50 MTHM Imm. Pu	Total WP Est. Cost 50 MTHM Imm. Pu	WP Qty. 18 MTHM Imm. Pu	Total WP Est. Cost 18 MTHM Imm. Pu
21 PWR Control Rods	$505,000	114	$57,570,000	114	$57,570,000
12 PWR Absorber Plate	$352,000	390	$137,280,000	390	$137,280,000
44 BWR Absorber Plate	$478,000	4,408	$2,107,024,000	4,408	$2,107,024,000
24 BWR Thick Absorber Plate	$414,000	109	$45,126,000	109	$45,126,000
5 DHLW/DOE SNF	$365,000	1,557	$568,305,000	1,530	$558,450,000
5 DHLW/DOE SNF–Long	$463,000	2,821	$1,306,123,000	2,821	$1,306,123,000
Naval SNF	$460,000	200	$92,000,000	200	$92,000,000
Naval SNF–Long	$491,000	100	$49,100,000	100	$49,100,000
2 MCO/ 2 DHLW	$384,000	199	$76,416,000	199	$76,416,000
GTCC/SPAR (Naval SNF–Long)	$491,000	601	$295,091,000	601	$295,091,000
Totals		17,232	$7,858,147,000	17,205	$7,848,292,000

6.2.4 Emplacement Pallet Estimates–Site Recommendation Design

The information in this section is based on the sketches referenced in Section 4 and provided in Attachment I.

6.2.4.1 Emplacement Pallet Estimates for Base Case–Site Recommendation Design

Table 6-13 lists the total emplacement pallet materials to be procured and emplaced with the WPs and estimated costs (1998 $) for the Base Case Inventory Module and DPC/UCF waste form option for the SR design. There is one emplacement pallet for each WP in the SR design.

Table 6-13. Emplacement Pallet Quantities, Material Usage, and Cost–One Emplacement Pallet for Each Waste Package–Base Case–Site Recommendation Design

Thermal Loading Alternative	60 MTHM/acre
Approx. # of Short Emplacement Pallet	1,592
Approx. # of Long Emplacement Pallet	9,709
Total Mass of Alloy 22 in Emplacement Pallet (kg)	16,047,420

Thermal Loading Alternative	60 MTHM/acre
Total Mass of Stainless Steel in Emplacement Pallet (kg)	7,290,492
Total Estimated Cost of Emplacement Pallet (1998 $)	$799,187,000

6.2.4.2 Emplacement Pallet Estimates for Inventory Module 1–Site Recommendation Design

Table 6-14 lists the total emplacement pallet materials to be procured and emplaced with the WPs and estimated costs (1998 $) for Inventory Module 1 and DPC/UCF waste form option for the SR design. There is one emplacement pallet for each WP in the SR design.

Table 6-14. Emplacement Pallet Quantities, Material Usage and Cost–One Emplacement Pallet for Each Waste Package–Inventory Module 1–Site Recommendation Design

Thermal Loading Alternative	60 MTHM/acre 50 MTHM Imm. Pu	60 MTHM/acre 18 MTHM Imm. Pu
Approx. # of Short Emplacement Pallet	1,557	1,530
Approx. # of Long Emplacement Pallet	15,074	15,074
Total Mass of Alloy 22 in Emplacement Pallet (kg)	23,616,020	23,577,680
Total Mass of Stainless Steel in Emplacement Pallet (kg)	10,945,872	10,934,856
Total Estimated Cost of Emplacement Pallet (1998 $)	$1,177,687,000	$1,175,824,000

6.2.4.3 Emplacement Pallet Estimates for Inventory Module 2–Site Recommendation Design

Table 6-15 lists the total emplacement pallet materials to be procured and emplaced with the WPs and estimated costs (1998 $) for Inventory Module 2 and the DPC/UCF waste form option for the SR design. There is one emplacement pallet for each WP for the SR design.

Table 6-15. Emplacement Pallet Quantities, Material Usage, and Cost–One Emplacement Pallet for Each Waste Package–Inventory Module 2–Site Recommendation Design

Thermal Loading Alternative	60 MTHM/acre 50 MTHM Imm. Pu	60 MTHM/acre 18 MTHM Imm. Pu
Approx. # of Short Emplacement Pallet	1,557	1,530
Approx. # of Long Emplacement Pallet	15,675	15,675
Total Mass of Alloy 22 in Emplacement Pallet (kg)	24,469,440	24,431,100
Total Mass of Stainless Steel in Emplacement Pallet (kg)	11,356,956	11,345,940
Total Estimated Cost of Emplacement Pallet (1998 $)	$1,220,358,000	$1,218,495,000

6.2.5 Drip Shield Estimates–Site Recommendation Design

The following three sections are based on the drip shield sketch referenced in Section 4 and provide the resource information and estimated costs for the drip shields. For each section, the theoretical WP emplacement length requiring drip shield coverage is calculated by adding the WP spacing distance of 10 cm (CRWMS M&O 1999b, p. 7-2) to the overall length of each WP. The number of interlocking drip shield sections is then calculated by dividing the total emplacement length by the length of one drip shield section (5.51 m). For conservatism, the calculated number of drip shields has been increased by one drip shield section per emplacement drift. The number of emplacement drifts has been calculated on the basis that each emplacement drift is 1,000 meters long.

6.2.5.1 Drip Shield Estimates for Base Case–Site Recommendation Design

The following two tables provide the drip shield resource information for the Base Case and DPC/UCF Waste Form Option. For conservatism, the calculated number of drip shields (10,402) has been increased by 58 (58,000 m [rounded up] divided by 1,000 meters per drift) for a total of 10,460.

Table 6-16. Total Estimated Waste Package Emplacement Length–Base Case–Site Recommendation Design

WP Type	Overall WP Length (m)	WP Qty.	WP Emplacement Length (m)
21 PWR Absorber Plate	5.165	4,299	22,634.24
21 PWR Control Rods	5.165	95	500.18
12 PWR Absorber Plate	5.651	163	937.41
44 BWR Absorber Plate	5.165	2,831	14,905.22
24 BWR Thick Absorber Plate	5.105	84	437.22
5 DHLW/DOE SNF	3.590	1,592	5,874.48
5 DHLW/DOE SNF–Long	5.217	1,751	9,310.07
Naval SNF	5.430	200	1,106.00
Naval SNF–Long	6.065	100	616.50
2 MCO/2 DHLW	5.217	186	988.96
Totals		11,301	57,310

Table 6-17. Drip Shield Quantities, Material Usage, and Cost–Base Case–Site Recommendation Design

Quantity of Drip Shield Sections	Titanium G7 (kg)	Titanium G24 (kg)	Alloy 22 (kg)	Total Estimated Cost
10,460	34,141,440	8,671,340	1,150,600	$3,399,500,000

6.2.5.2 Drip Shield Estimates for Inventory Module 1–Site Recommendation Design

The following two tables provide the drip shield resource information for Inventory Module 1 and DPC/UCF Waste Form Option. For conservatism, the calculated number of drip shields has been (15,535 for 50 MTHM and 15,517 for 18 MTHM) has been increased by 86 (86,000 m [rounded up] divided by 1,000 meters per drift) for totals of 15,621 for 50 MTHM and 15,603 for 18 MTHM.

Table 6-18. Total Estimated Waste Package Emplacement Length–Inventory Module 1–Site Recommendation Design

WP Type	Overall WP Length (m)	WP Qty. 50 MTHM Imm. Pu	WP Emplacement Length (m) 50 MTHM Imm. Pu	WP Qty. 18 MTHM Imm. Pu	WP Emplacement Length (m) 18 MTHM Imm. Pu
21 PWR Absorber Plate	5.165	6,733	35,449.25	6,733	35,449.25
21 PWR Control Rods	5.165	114	600.21	114	600.21
12 PWR Absorber Plate	5.651	390	2,242.89	390	2,242.89
44 BWR Absorber Plate	5.165	4,408	23,208.12	4,408	23,208.12
24 BWR Thick Absorber Plate	5.105	109	567.35	109	567.35
5 DHLW/DOE SNF	3.590	1,557	5,745.33	1,530	5,645.70
5 DHLW /DOE SNF–Long	5.217	2,821	14,999.26	2,821	14,999.26
Naval SNF	5.430	200	1,106.00	200	1,106.00
Naval SNF–Long	6.065	100	616.50	100	616.50
2 MCO/2 DHLW	5.217	199	1,058.08	199	1,058.08
Totals		16,631	85,593	16,604	85,493

Table 6-19. Drip Shield Quantities, Material Usage, and Cost–Inventory Module 1–Site Recommendation Design

Immobilized Pu Amount	Quantity of Drip Shield Sections	Titanium G7 (kg)	Titanium G24 (kg)	Alloy 22 (kg)	Total Estimated Cost
50 MTHM	15,621	50,986,944	12,949,809	1,718,310	$5,076,825,000
18 MTHM	15,603	50,928,192	12,934,887	1,716,330	$5,070,975,000

6.2.5.3 Drip Shield Estimates for Inventory Module 2–Site Recommendation Design

The following two tables provide the drip shield resource information for Inventory Module 2 and DPC/UCF Waste Form Option. For conservatism, the calculated number of drip shields (16,207 for 50 MTHM and 16,189 for 18 MTHM) has been increased by 90 (90,000 m [rounded

up] divided by 1,000 meters per drift) for totals of 16,297 for 50 MTHM and 16,279 for 18 MTHM.

Table 6-20. Total Estimated Waste Package Emplacement Length–Inventory Module 2–Site Recommendation Design

WP Type	Overall WP Length (m)	WP Qty. 50 MTHM Imm. Pu	WP Emplacement Length (m) 50 MTHM Imm. Pu	WP Qty. 18 MTHM Imm. Pu	WP Emplacement Length (m) 18 MTHM Imm. Pu
21 PWR Absorber Plate	5.165	6,733	35,449.25	6,733	35,449.25
21 PWR Control Rods	5.165	114	600.21	114	600.21
12 PWR Absorber Plate	5.651	390	2,242.89	390	2,242.89
44 BWR Absorber Plate	5.165	4,408	23,208.12	4,408	23,208.12
24 BWR Thick Absorber Plate	5.105	109	567.35	109	567.35
5 DHLW/DOE SNF	3.590	1,557	5,745.33	1,530	5,645.70
5 DHLW/DOE SNF–Long	5.217	2,821	14,999.26	2,821	14,999.26
Naval SNF	5.430	200	1,106.00	200	1,106.00
Naval SNF–Long	6.065	100	616.50	100	616.50
2 MCO/2 DHLW	5.217	199	1,058.08	199	1,058.08
GTCC/SPAR (Naval SNF–Long)	6.065	601	3,705.17	601	3,705.17
Totals		17,232	89,298	17,205	89,199

Table 6-21. Drip Shield Quantities, Material Usage, and Cost–Inventory Module 2–Site Recommendation Design

Immobilized Pu Amount	Quantity of Drip Shield Sections	Titanium G7 (kg)	Titanium G24 (kg)	Alloy 22 (kg)	Total Estimated Cost
50 MTHM	16,297	53,193,408	13,510,213	1,792,670	$5,296,525,000
18 MTHM	16,279	53,134,656	13,495,291	1,790,690	$5,290,675,000

6.3 ENGINEERED BARRIER SEGMENT/WASTE PACKAGE NORMAL OPERATIONS

6.3.1 Normal Waste Package Handling Loads

As part of normal repository operations, the WP will be subject to the following loads associated with the handling, transportation, or emplacement operations. The effect of these loads have been evaluated along with the DBEs (Section 6.4).

- Loading of the waste into a DC
- Engaging the DC cell crane lifting fixture onto the WP prior to lifting
- Decontaminating the WP using pelletized carbon dioxide
- Shifting/settling of the waste during horizontalization and transport of the WP

- Gantry lifting heads engaging WP prior to lifting

6.4 ENGINEERED BARRIER SEGMENT/WASTE PACKAGE DESIGN-BASIS EVENTS

6.4.1 Waste Package Design-Basis Events

The information contained in the former EF reflects the current information on the WP DBEs.

6.4.2 Emplacement Pallet Design-Basis Events

For the SR design, the WPs are emplaced by lifting the emplacement pallet with the WP together from below. In the event of handling damage, it is less critical for the support structure to be damaged than for the WP to be breached. Therefore, the emplacement pallet is designed to yield first in the event of handling damage, thus helping to preserve waste containment. The environmental impact of damage to the emplacement pallet would be confined to replacement of the emplacement pallet.

6.4.3 Drip Shield Design-Basis Events

The drip shield is a rigid structure that diverts water away from the WPs (CRWMS M&O 1999b, p. 4-17). Inclusion of a drip shield increases the degree of defense in depth and protects the WP from contact with chemically aggressive seepage water during the thermal pulse, when the WP material would be most degraded by such water (CRWMS M&O 1999b, p. 6-15). The placement of drip shields under or over the backfill will not affect the probability of the DBEs and will not add a DBE (CRWMS M&O, p. 12). The impact on the drip shield of design-basis events without backfill is still being evaluated.

6.5 ENGINEERED BARRIER SEGMENT/WASTE PACKAGE MONITORING PERIOD

The Monitoring Period begins when all the waste has been emplaced. It includes safeguarding the waste, maintaining surface and subsurface facilities required to support performance confirmation, responding to unusual events, conducting maintenance, maintaining the capability for retrieval, gathering data to support predictions of the repository performance, and preparing an application to amend the repository license for permanent closure (CRWMS M&O 1999e, p. 3-3). Continuous preclosure airflow, which will be applied to the emplacement drifts for temperature control (CRWMS M&O 1999b, p. 7-2), will commence with emplacement of loaded WPs and continue until repository closure.

The information contained in the former EF reflects the current information on the Performance Confirmation Plan Elements.

6.6 ENGINEERED BARRIER SEGMENT/WASTE PACKAGE SUBSTANTIALLY COMPLETE CONTAINMENT PERIOD

The SCC Period (Closure Phase and early part of the Postclosure Phase of the repository) begins with installation of drip shields in the emplacement drifts, closing and sealing the subsurface

facilities, decontaminating, decommissioning, removing the surface facilities, sealing the subsurface facilities, creating institutional barriers, and returning the site to its natural condition as required by the NRC (CRWMS M&O 1999e, p. 3-3). The SCC Period continues while the WP containment barriers are relied upon to provide containment of the radionuclides. The SCC Period ends when the WP containment barriers are no longer relied upon to provide containment of the radionuclides.

6.7 ENGINEERED BARRIER SEGMENT/WASTE PACKAGE WASTE ISOLATION PERIOD

The information contained in the former EF reflects the current information on the EBS/WP waste isolation period.

7. REFERENCES

7.1 DOCUMENTS CITED

The following references reflect those used for this document; references for the former EF have not been included. Some of the information in this document has been gathered from documents that reflect design concepts, as the EIS EF information is required before completion of the design analysis.

CRWMS M&O 1996a. *Engineered Barrier Segment/Waste Package.* Volume III of *Mined Geologic Disposal System Advanced Conceptual Design Report.* B00000000-01717-5705-00027 REV 00. Las Vegas, Nevada: CRWMS M&O. ACC: MOL.19960826.0096.

CRWMS M&O 1996b. *Mined Geologic Disposal System Functional Analysis Document.* B00000000-01717-1708-00006 REV 01. Las Vegas, Nevada: CRWMS M&O. ACC: MOL.19970124.0397.

CRWMS M&O 1998. *Evaluation of Codisposal Viability for Aluminum-Clad DOE-Owned Spent Fuel: Phase II Degraded Codisposal Waste Package Internal Criticality.* BBA000000-01717-5705-00017 REV 01. Las Vegas, Nevada: CRWMS M&O. ACC: MOL.19981014.0038.

CRWMS M&O 1999a. *Waste Package Final Update to EIS Engineering File.* BBA000000-01717-5705-00019 REV 01. Las Vegas, Nevada: CRWMS M&O. ACC: MOL.19990330.0530.

CRWMS M&O 1999b. *License Application Design Selection Report.* B00000000-01717-4600-00123 REV 01 ICN 01. Las Vegas, Nevada: CRWMS M&O. ACC: MOL.19990908.0319.

CRWMS M&O 1999c. *WPO Technical Input to SR -1101 2125 M4.* Activity Evaluation, October 1, 1999. Las Vegas, Nevada: CRWMS M&O. ACC: MOL.19991001.0150.

CRWMS M&O 1999d. *Technical Document Development Plan (DP) for the Update to EIS WP Engineering File-SR.* TDP-EBS-ND-000006 REV 00. Las Vegas, Nevada: CRWMS M&O. ACC: MOL.19991207.0218.

CRWMS M&O 1999e. *Monitored Geologic Repository Concept of Operations.* B00000000-01717-4200-00004 REV 03. Las Vegas, Nevada: CRWMS M&O. ACC: MOL.19990916.0104.

CRWMS M&O 1999f. *Monitored Geologic Repository Project Description Document.* B00000000-01717-1705-00003 REV 00 DCN 01. Las Vegas, Nevada: CRWMS M&O. ACC: MOL.19991117.0160.

CRWMS M&O 1999g. *Waste Package Related Impacts of Plutonium Disposition Waste Forms in a Geologic Repository.* TDR-EBS-MD-000003 REV 00. Las Vegas, Nevada: CRWMS M&O. ACC: MOL.19990825.0259.

CRWMS M&O 1999h. *Dose Calculation for the Single-CRM 21-PWR Waste Package with Drip Shield.* BBAC00000-01717-0210-00017 REV 00. Las Vegas, Nevada: CRWMS M&O. ACC: MOL.19990927.0471.

CRWMS M&O 2000a. *Waste Package Operations Fabrication Process Report.* TDR-EBS-ND-000003 REV 00. Las Vegas, Nevada: CRWMS M&O. ACC: MOL.20000217.0244.

CRWMS M&O 2000b. *Waste Package Containment Barrier Materials and Drip Shield Selection Report.* B00000000-01717-2200-00225 REV 00. Las Vegas, Nevada: CRWMS M&O. ACC: MOL.200000209.0300.

CRWMS M&O 2000c. *Waste Package Internal Materials Selection Report.* B00000000-01717-2200-00226 REV 00. Las Vegas, Nevada: CRWMS. ACC: MOL.20000209.0299.

CRWMS M&O 2000d. *Waste Package Neutron Absorber, Thermal Shunt, and Fill Gas Selection Report.* B00000000-01717-2200-00227 REV 00. Las Vegas, Nevada: CRWMS M&O. ACC: MOL.20000209.0301.

CRWMS M&O 2000e. *Waste Packages and Source Terms for the Commercial 1999 Design Basis Waste Streams.* CAL-MGR-MD-000001 REV 00. Las Vegas, Nevada: CRWMS M&O. ACC: MOL.20000214.0479.

DOE (U.S. Department of Energy) 1999. *Draft Environmental Impact Statement for a Geologic Repository for the Disposal of Spent Nuclear Fuel and High-Level Radioactive Waste at Yucca Mountain, Nye County, Nevada.* DOE/EIS-0250D. Summary, Volumes I and II. Washington, D.C.: U.S. Department of Energy, Office of Civilian Radioactive Waste Management. ACC: MOL.19990816.0240.

DOE 2000. *Quality Assurance Requirements and Description.* DOE/RW-0333P, Rev. 9. Washington, D.C.: U.S. Department of Energy, Office of Civilian Radioactive Waste Management. ACC: MOL.19991028.0012.

Dyer, J.R. 1999. "Revised Interim Guidance Pending Issuance of New U.S. Nuclear Regulatory Commission (NRC) Regulations (Revision 01, July 22, 1999), for Yucca Mountain, Nevada." Letter from Dr, J.R. Dyer (DOE) to Dr. D.R. Wilkins (CRWMS M&O), September 3, 1999, OL&RC:SB-1714, with enclosure, "Interim Guidance Pending Issuance of New NRC Regulations for Yucca Mountain (Revision 01)." ACC: MOL.19990910.0079.

Stroupe, E.P. 2000. "Approach to Implementing the Site Recommendation Design Baseline." Interoffice correspondence from E.P. Stroupe (CRWMS M&O) to Dr. D.R. Wilkins, January 26, 2000, LV.RSO.EPS.1/00-004, with attachment. ACC: MOL.20000214.0480.

YMP 1998. *Disposal Criticality Analysis Methodology Topical Report.* YMP/TR-004Q, Rev. 0. Las Vegas, Nevada: Yucca Mountain Site Characterization Office. ACC: MOL.19990210.0236.

7.2 CODES, STANDARDS, REGULATIONS, AND PROCEDURES

AP-2.13Q, Rev. 0, ICN 1. *Technical Product Development Planning.* Washington, D.C.: U.S. Department of Energy, Office of Civilian Radioactive Waste Management. ACC: MOL.19991115.0230.

AP-3.11Q, Rev. 0, ICN 1. *Technical Reports.* Washington, D.C.: U.S. Department of Energy, Office of Civilian Radioactive Waste Management. ACC: MOL.19991130.0149.

ASME (American Society of Mechanical Engineers) 1995. "Rules for Construction of Nuclear Power Plant Components, Divsion 1, Subsection NB, Class 1 Components." Section III of *ASME Boiler and Pressure Vessel Code, 1995 edition.* New York, New York: American Society of Mechanical Engineers. TIC: 245287.

10 CFR 20. 1998. Energy: Standards for Protection Against Radiation. Readily Available

INTENTIONALLY LEFT BLANK

ATTACHMENT I

GLOSSARY

(2 pages)

Terms defined in this section reflect the current usage for the EBS/WP design activities and are intended to apply only to usage in this EF. To the extent practical, these definitions and usages are made consistent with program documents, industrial usage, and EIS reporting and documentation.

Areal Mass Loading–A measure of the average amount of waste per unit area in the repository footprint. The units for areal mass loading are metric tons of heavy metal per acre (CRWMS M&O 1999b, p. D-1).

Backfill– (1) The general fill placed in excavated areas of an underground facility. (2) The material or process used to refill an excavation (DOE 1999, p.14-4).

Blast Cooling–Temporary use of high-flow ventilation in specific emplacement drifts to lower the drift temperature for a specific time and purpose (CRWMS M&O 1999b, p. D-1).

Blending–Refers to the systematic, deliberate selection of CSNF assemblies to be placed with one another within a particular WP, as compared with a random or "as received" order of filling the WPs. Blending can be performed to reduce the heat output variability (thermal blending) of the WPs or to reduce the reactivity of the WPs (blending for criticality control) (CRWMS M&O 1999b, p. D-1).

Canister–A thin-walled, unshielded metal container used as: (1) a pour mold in which molten vitrified high-level radioactive waste can solidify and cool; (2) the container in which DOE and electric utilities place intact SNF, loose rods, or nonfuel components for shipping or storage; or (3) in general, a container used to provide radionuclide confinement (DOE 1999, p.14-6). Most of the non-CSNF waste forms (DHLW, DSNF, and SPAR) are assumed to be produced and shipped in DISPCs form.

Codisposal–A packaging method for disposal of radioactive waste in which two types of waste, such as DOE-owned and DHLW, are placed together in one DC. Codisposal takes advantage of otherwise unused space in DCs and is more cost effective than other methods to limit the reactivity of individual packages (DOE 1999, p.14-7).

Critical/Nuclear Criticality–This is a condition in which nuclear fuel sustains a chain reaction of fission events. It occurs whenever the number of neutrons in one generation cycle is equal to the number of neutrons in the previous cycle, excluding source neutrons (neutrons resulting from decay or spontaneous fission of nuclides) (CRWMS M&O 1999b, p. D-2).

Criticality Control–Set of measures taken to maintain nuclear materials, including SNF, in a subcritical condition during storage, transportation, and disposal, so no self-sustaining nuclear chain reaction can occur. Subcriticality is maintained by loading SNF in specific configurations

that meet requirements related to fuel age, enrichment, and reduction in nuclear fuel reactivity (DOE 1999, p.14-9).

Defense-in-Depth–This term is used to describe the property of any system of multiple barriers designed to mitigate unanticipated conditions, processes, and events so that failure in any one barrier does not result in failure of the entire system (CRWMS M&O 1999b, p. D-2).

Disposal Container–The barrier or shell, spacing structures or baskets, integral shielding, and packing and other absorbent materials inside or immediately surrounding the container (i.e., attached to its outer surface). The DC may contain SNF and DHLW, but would exist only until the outer lid weld is complete and accepted. The DC does not include the waste form or the encasing containers or canisters (DHLW, DOE-owned, DISPCs, etc.) (DOE 1999, p.14-12).

Drift Spacing–The distance between parallel emplacement drifts, measured from the drift centerlines (CRWMS M&O 1999b, p. D-3).

Drip Shield–A drip shield is a sheet of impermeable material placed above the WP to prevent seepage water from directly contacting the WP (CRWMS M&O 1999b, p. D-3).

Engineered Barrier Segment/Waste Package Subsystem–A configuration item that includes the following Subsystem Elements: UCF-WP with basket, Canistered Fuel WP, DHLW/DOE SNF WP, non-fuel components waste, and other DOE-owned waste forms), filler materials (internal), shielding (permanently installed), packing and absorbent materials (immediately surrounding an individual WP), and the emplacement pallet (CRWMS M&O 1996a and CRWMS M&O 1996b). Integral drip shields, backfill, and/or invert media, if used to enhance WP performance, can be considered part of the EBS/WP.

Invert– (1) The low point of something such as a tunnel, drift, or drainage channel. (2) An engineered structure or material placed on excavated drift floors (the low points) to serve as structural support for drift transportation or emplacement systems (DOE 1999, p.14-20).

Juvenile Failure–Early failure resulting from manufacturing or operational defects (CRWMS M&O 1999b, p. D-3).

Line Load/Point Load (Waste Package Spacing)–Two distinctly different emplacement strategies for WPs within a drift. Line load refers to placement such that the WPs are virtually end-to-end or nearly touching. Point load refers to placement such that the WPs are separated by at least 2 m (CRWMS M&O 1999b, p. D-3).

Pillar–The region of rock between the emplacement drifts (CRWMS M&O 1999b, p. D-4).

Waste Package–The waste form and any containers (i.e., DC barriers and other canisters), spacing structure or baskets, shielding integral to the container, packing inside the container, and other absorbent materials immediately surrounding an individual waste container placed internally to the container or attached to the outer surface of the DC. The WP begins its existence when the outer lid welds are complete and accepted (DOE 1999, p.14-36).

ATTACHMENT II

WASTE PACKAGE DESIGN SKETCHES

(24 pages)

INTENTIONALLY LEFT BLANK

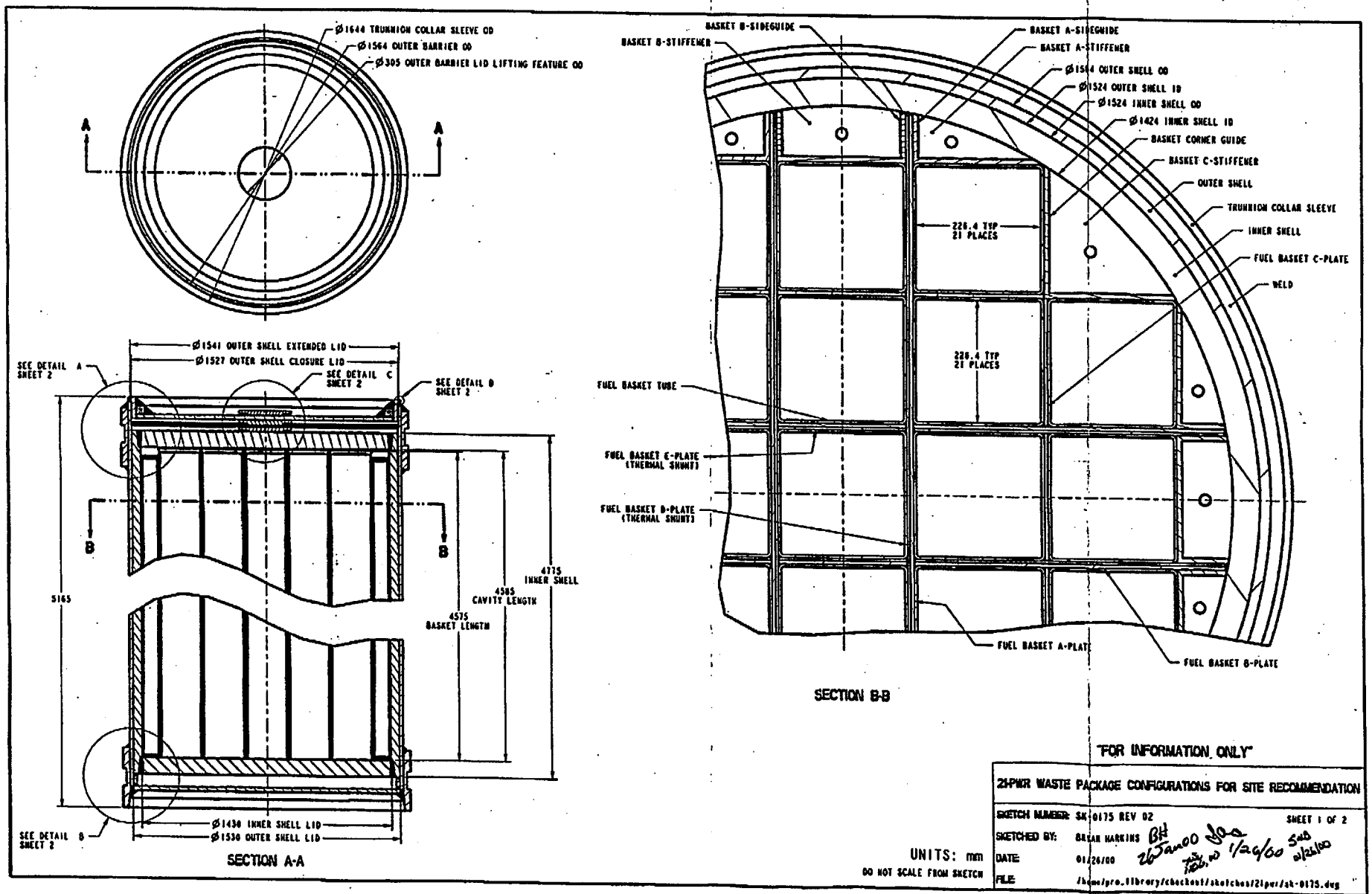
Ø1644 TRUNNION COLLAR SLEEVE OD
Ø1564 OUTER BARRIER OD
Ø305 OUTER BARRIER LID LIFTING FEATURE OD
A
A
Ø1541 OUTER SHELL EXTENDED LID
Ø1527 OUTER SHELL CLOSURE LID
SEE DETAIL A SHEET 2
SEE DETAIL C SHEET 2
SEE DETAIL D SHEET 2
B
B
5165
4585 CAVITY LENGTH
4575 BASKET LENGTH
4775 INNER SHELL
SEE DETAIL B SHEET 2
Ø1430 INNER SHELL LID
Ø1530 OUTER SHELL LID
SECTION A-A
BASKET B-SIDEGUIDE
BASKET B-STIFFENER
BASKET A-SIDEGUIDE
BASKET A-STIFFENER
Ø1564 OUTER SHELL OD
Ø1524 OUTER SHELL ID
Ø1524 INNER SHELL OD
Ø1424 INNER SHELL ID
BASKET CORNER GUIDE
BASKET C-STIFFENER
OUTER SHELL
TRUNNION COLLAR SLEEVE
INNER SHELL
FUEL BASKET C-PLATE
WELD
226.4 TYP 21 PLACES
226.4 TYP 21 PLACES
FUEL BASKET TUBE
FUEL BASKET C-PLATE (THERMAL SHUNT)
FUEL BASKET D-PLATE (THERMAL SHUNT)
FUEL BASKET A-PLATE
FUEL BASKET B-PLATE
SECTION B-B
"FOR INFORMATION ONLY"
21-PWR WASTE PACKAGE CONFIGURATIONS FOR SITE RECOMMENDATION
SKETCH NUMBER: SK-0175 REV 02
SHEET 1 OF 2
SKETCHED BY: BRIAN HARKINS
DATE: 01/26/00
FILE: /home/pro_library/checkout/sketches/21pwr/sk-0175.dwg
UNITS: mm
DO NOT SCALE FROM SKETCH

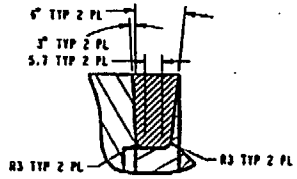

DETAIL D

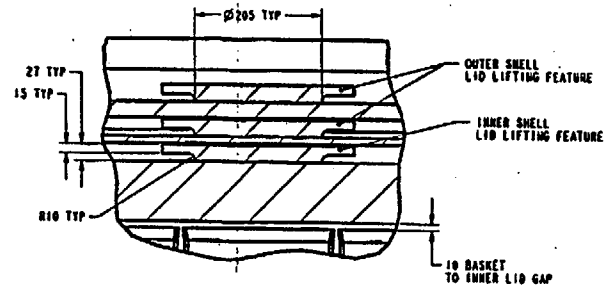

DETAIL C

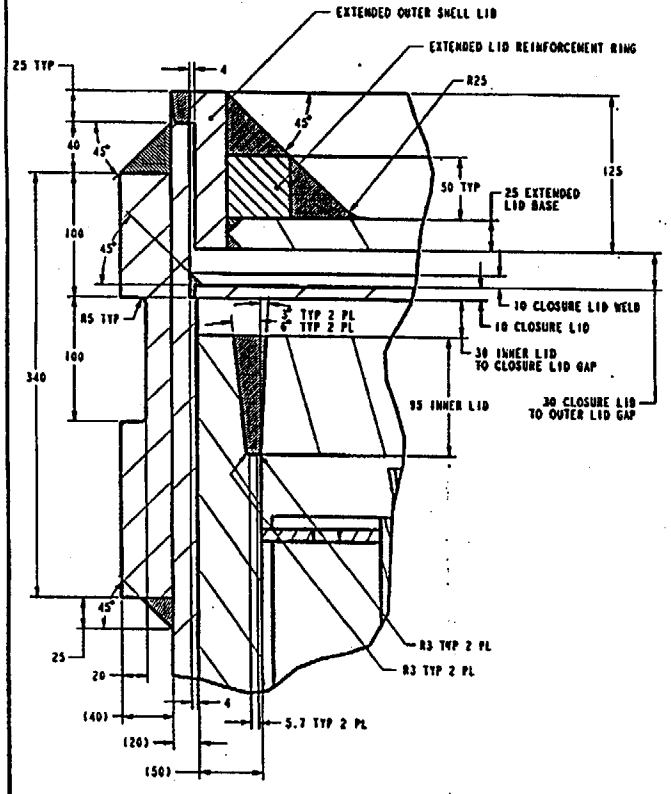

DETAIL A

21-PWR WASTE PACKAGE ASSEMBLY WITH STAINLESS STEEL/BORON PLATES

& 21-PWR CONTROL ROD WASTE PACKAGE ASSEMBLY WITH CARBON STEEL PLATES

COMPONENT NAME	MATERIAL	THICKNESS	MASS (KG)	QTY ROD
BASKET A-SIDEGUIDE	SA-516 K02700	10	27	32
BASKET A-STIFFENER	SA-516 K02700	10	0.72	64
BASKET B-SIDEGUIDE	SA-516 K02700	10	36	16
BASKET B-STIFFENER	SA-516 K02700	10	1.5	32
BASKET C-STIFFENER	SA-516 K02700	10	2.3	32
BASKET CORNERGUIDE	SA-516 K02700	10	42	16
FUEL BASKET A-PLATE	NEUTRONIT A 978	7	65	8
	BSA-516 K02700	87	886	88
FUEL BASKET B-PLATE	NEUTRONIT A 978	7	65	8
	BSA-516 K02700	87	886	88
FUEL BASKET C-PLATE	NEUTRONIT A 978	7	44	16
	BSA-516 K02700	87	845	816
FUEL BASKET D-PLATE	SB-209 A96061 T4	5	21	8
FUEL BASKET E-PLATE	SB-209 A96061 T4	5	21	8
FUEL BASKET TUBE	SA-516 K02700	5	164	21
INNER SHELL	SA-240 S31600	50	8709	1
INNER SHELL LID	SA-240 S31600	95	1200	2
INNER LID LIFTING FEATURE	SA-240 S31600	27	12	1
OUTER SHELL	SB-575 N06022	20	4193	1
EXTENDED OUTER SHELL LID	SB-575 N06022	25	132	1
EXTENDED OUTER SHELL LID BASE	SB-575 N06022	25	366	1
OUTER LID LIFTING FEATURE	SB-575 N06022	27	13	2
EXTENDED LID REINFORCEMENT RING	SB-575 N06022	50	87	1
OUTER SHELL FLAT CLOSURE LID	SB-575 N06022	10	159	1
OUTER SHELL FLAT BOTTOM LID	SB-575 N06022	25	396	1
UPPER TRUNNION COLLAR SLEEVE	SB-575 N06022	40	507	1
LOWER TRUNNION COLLAR SLEEVE	SB-575 N06022	40	493	1
INNER SHELL SUPPORT RING	SB-575 N06022	20	41	1
TOTAL ALLOY 22 WELDS	SFA-5.14 N06022	-	249	
TOTAL 316 WELDS	SFA-5.9 S31680	-	128	
WASTE PACKAGE ASSEMBLY	-	-	26035	1
	-	-	026050	81
PWR FUEL ASSEMBLY	-	-	773.4	21
HP ASSEMBLY WITH SNF	-	-	42277	1
	-	-	042301	81

THE OBLITERATED INFORMATION WAS NOT USED AND DOES NOT IMPACT THE TECHNICAL CONTENT OF THE DOCUMENT.

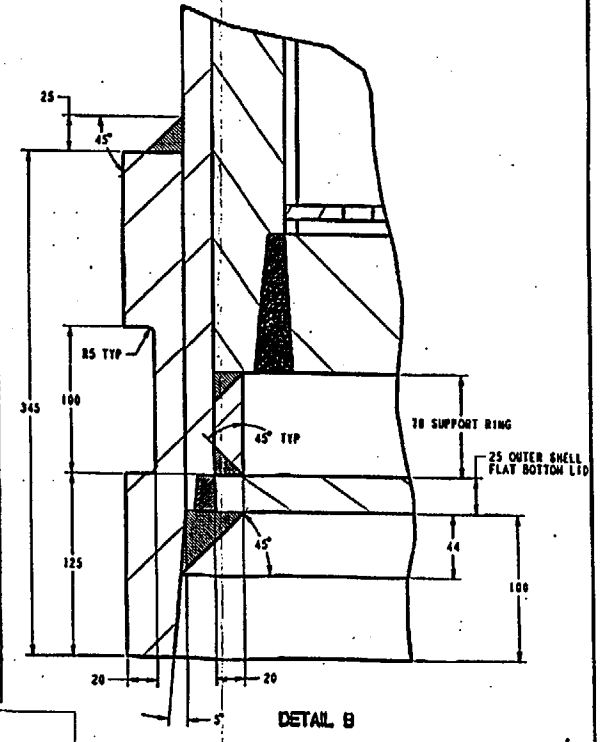

DETAIL B

03 SMB 04/27/00

SK-0175 REV 01 | SHEET 2 OF 2

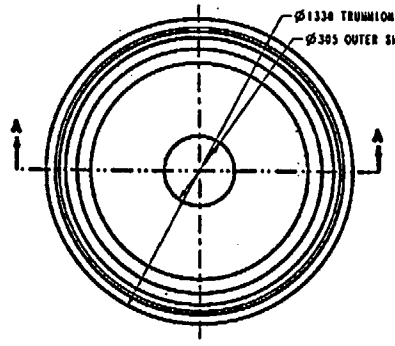

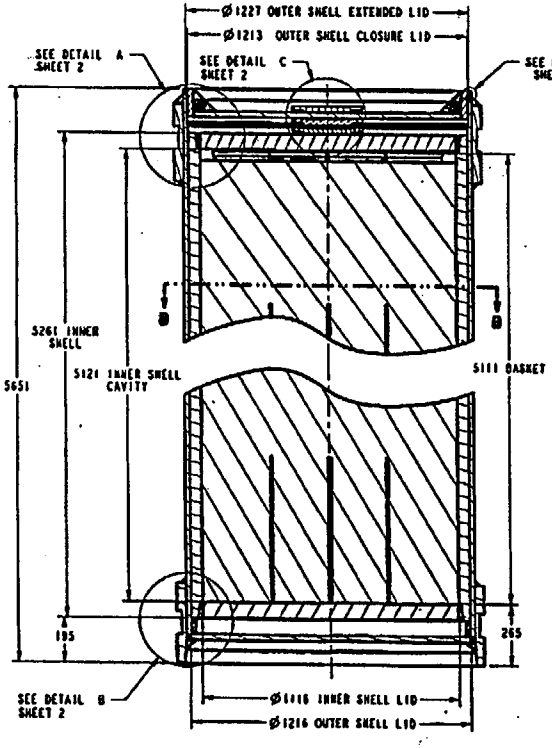

SECTION A-A

COMPONENT NAME	MATERIAL	THICKNESS	MASS (KG)	QTY (NO)
BASKET SIDEGUIDE	SA-516 K02700	10	28	32
BASKET SIDEGUIDE STIFFENER	SA-516 K02700	10	0.50	64
BASKET CORNER GUIDE	SA-516 K02700	10	48	16
BASKET CORNER GUIDE STIFFENER	SA-516 K02700	10	2.5	32
FUEL BASKET A-PLATE	NEUTRONIT A 978	7	76	4
FUEL BASKET B-PLATE	NEUTRONIT A 978	7	76	4
FUEL BASKET C-PLATE	NEUTRONIT A 978	7	34	16
FUEL BASKET D-PLATE	SB-209 A96061 T4	5	18	4
FUEL BASKET E-PLATE	SB-209 A96061 T4	5	18	4
FUEL BASKET TUBE	SA-516 K02700	5	187	12
INNER SHELL	SA-240 S31600	50	7569	1
INNER SHELL LID	SA-240 S31600	70	538	2
INNER LID LIFTING FEATURE	SA-240 S31600	27	12	1
OUTER SHELL	SB-575 N06022	25	3666	1
EXTENDED OUTER SHELL LID	SB-575 N06022	25	104	1
EXTENDED OUTER SHELL LID BASE	SB-575 N06022	25	226	1
EXTENDED LID REINFORCEMENT RING	SB-575 N06022	50	76	1
OUTER LID LIFTING FEATURE	SB-575 N06022	27	13	2
OUTER SHELL FLAT CLOSURE LID	SB-575 N06022	10	100	1
OUTER SHELL FLAT BOTTOM LID	SB-575 N06022	25	250	1
UPPER TRUNNION COLLAR SLEEVE	SB-575 N06022	40	400	1
LOWER TRUNNION COLLAR SLEEVE	SB-575 N06022	40	400	1
INNER SHELL SUPPORT RING	SB-575 N06022	20	32	1
TOTAL ALLOY 22 WELDS	SFA-5.14 N06022	-	196	
TOTAL 316 WELDS	SFA-5.9 S31600	-	87	
WASTE PACKAGE ASSEMBLY	-	-	19541	1
PWR FUEL ASSEMBLY	-	-	882.2	12
WP ASSEMBLY WITH SNF	-	-	30127	1

THE OBLITERATED INFORMATION WAS NOT USED AND DOES NOT IMPACT THE TECHNICAL CONTENT OF THE DOCUMENT.

UNITS: mm

DO NOT SCALE FROM SKETCH

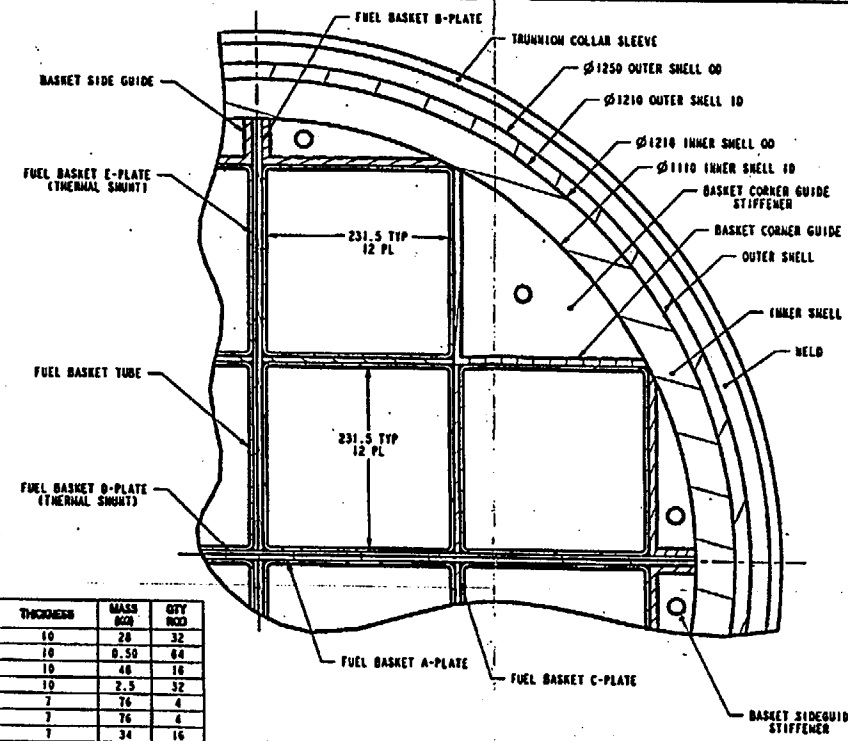

SECTION B-B

"FOR INFORMATION ONLY"

12-PWR LONG WASTE PACKAGE CONFIGURATION FOR SITE RECOMMENDATION

SKETCH NUMBER: SK-0183 REV 00 SHEET 1 OF 2

SKETCHED BY: GENE CORNELL

DATE: 01/26/00

FILE: /home/pro_library/checkout/sketches/12pwr/12pwr long/SK-0183.dwg

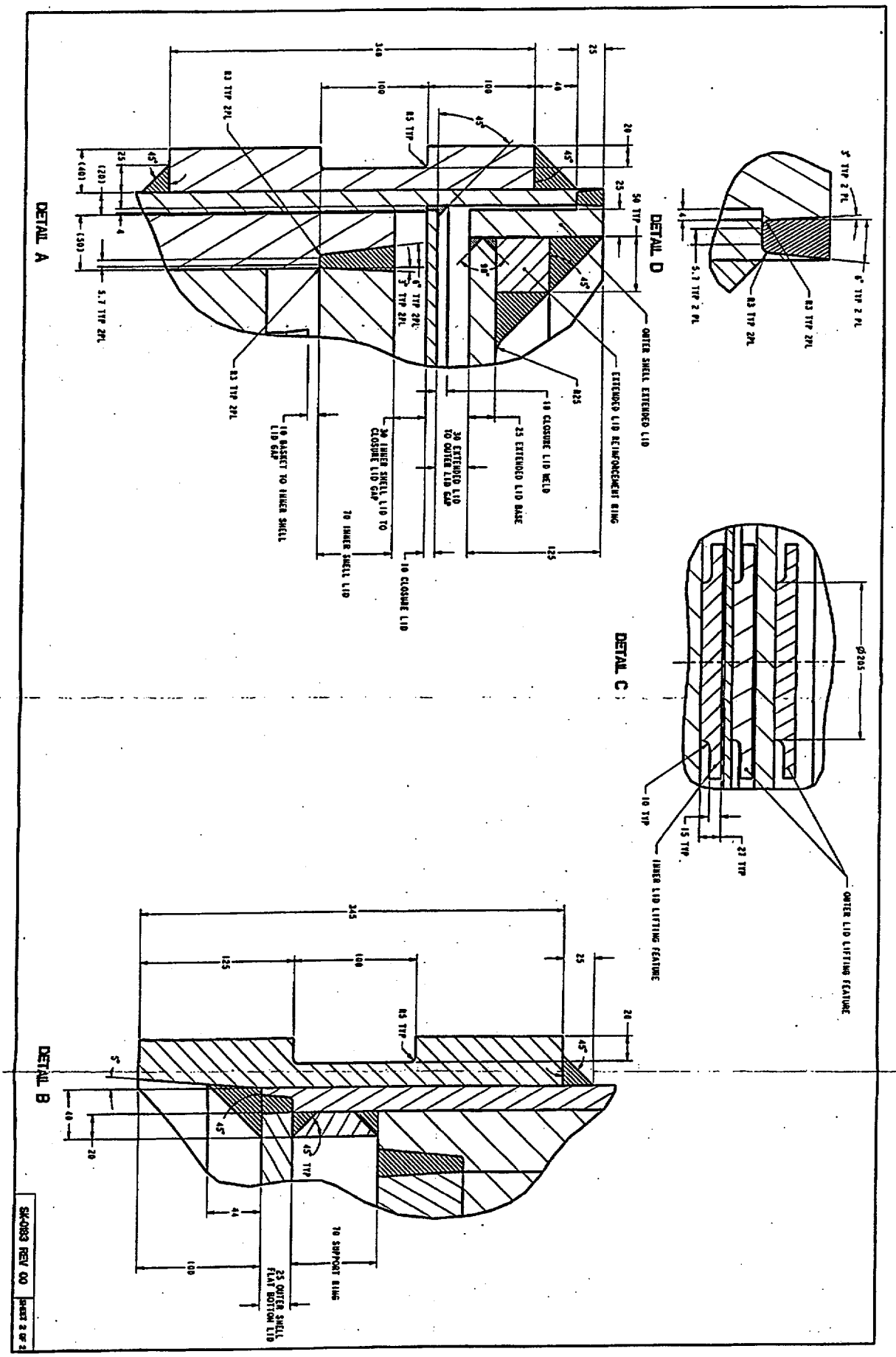
DETAIL A
DETAIL B
DETAIL C
DETAIL D
OUTER SHELL EXTENDED LID
EXTENDED LID REINFORCEMENT RING
10 CLOSURE LID WELD
25 EXTENDED LID BASE
30 EXTENDED LID TO OUTER LID GAP
30 INNER SHELL LID TO CLOSURE LID GAP
10 BASKET TO INNER SHELL LID GAP
TO INNER SHELL LID
10 CLOSURE LID
TO SUPPORT RING
25 OUTER SHELL FLAT BOTTOM LID
OUTER LID LIFTING FEATURE
INNER LID LIFTING FEATURE
SK-0883 REV 00
SHEET 2 OF 2

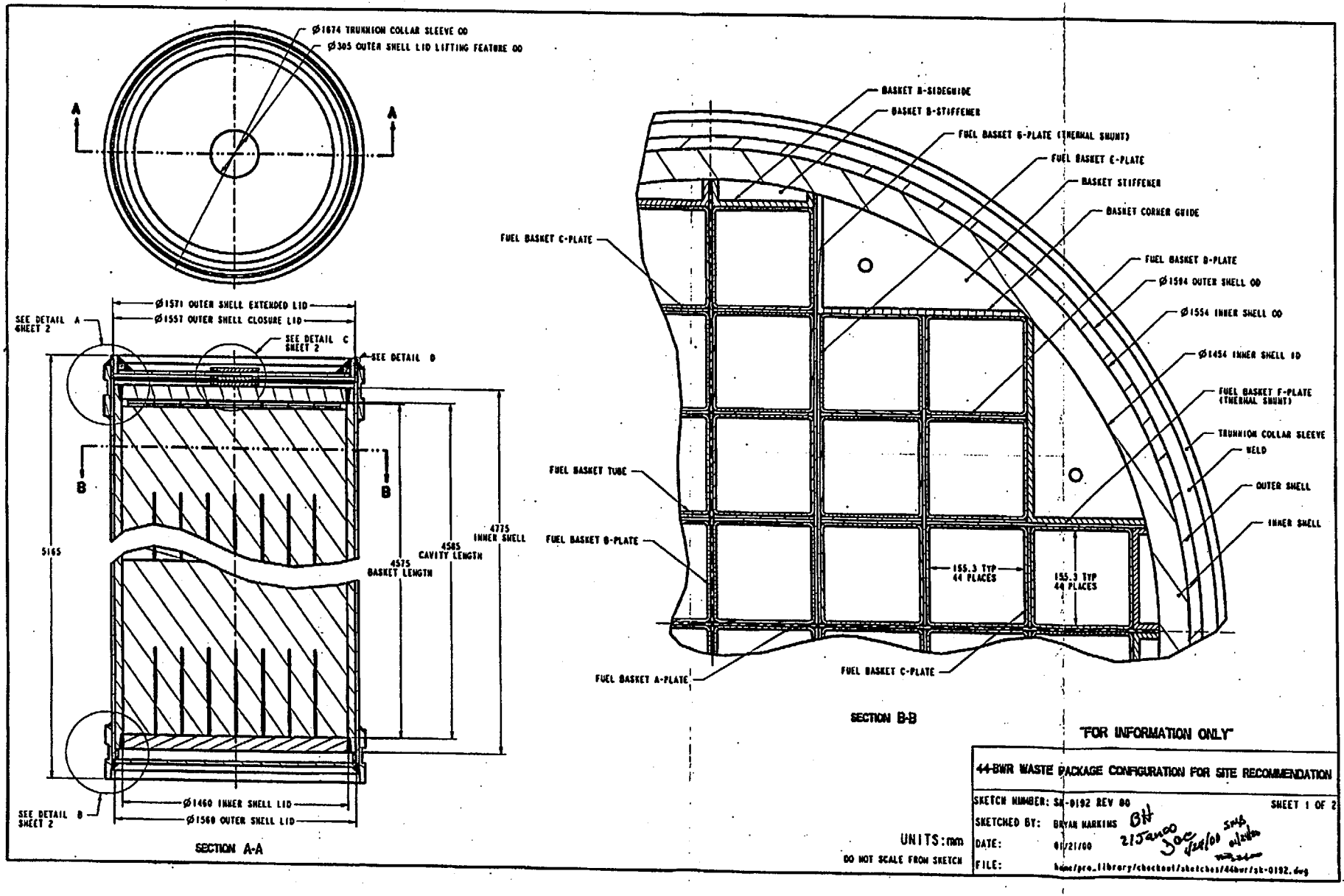
Ø1674 TRUNNION COLLAR SLEEVE OD
Ø305 OUTER SHELL LID LIFTING FEATURE OD
A
A
Ø1571 OUTER SHELL EXTENDED LID
Ø1557 OUTER SHELL CLOSURE LID
SEE DETAIL A SHEET 2
SEE DETAIL C SHEET 2
SEE DETAIL D
B
B
5165
4775 INNER SHELL
4585 CAVITY LENGTH
4575 BASKET LENGTH
SEE DETAIL B SHEET 2
Ø1460 INNER SHELL LID
Ø1560 OUTER SHELL LID
SECTION A-A
BASKET A-SIDEGUIDE
BASKET B-STIFFENER
FUEL BASKET G-PLATE (THERMAL SHUNT)
FUEL BASKET E-PLATE
BASKET STIFFENER
BASKET CORNER GUIDE
FUEL BASKET C-PLATE
FUEL BASKET D-PLATE
Ø1594 OUTER SHELL OD
Ø1554 INNER SHELL OD
Ø1454 INNER SHELL ID
FUEL BASKET F-PLATE (THERMAL SHUNT)
TRUNNION COLLAR SLEEVE
WELD
OUTER SHELL
INNER SHELL
FUEL BASKET TUBE
FUEL BASKET B-PLATE
155.3 TYP 44 PLACES
155.3 TYP 44 PLACES
FUEL BASKET A-PLATE
FUEL BASKET C-PLATE
SECTION B-B
"FOR INFORMATION ONLY"
44-BWR WASTE PACKAGE CONFIGURATION FOR SITE RECOMMENDATION
SKETCH NUMBER: SK-0192 REV 00
SHEET 1 OF 2
SKETCHED BY: BRYAN MARKINS
DATE: 01/21/00
FILE: home/pro_library/checkout/sketches/44bwr/sk-0192.dwg
UNITS: mm
DO NOT SCALE FROM SKETCH

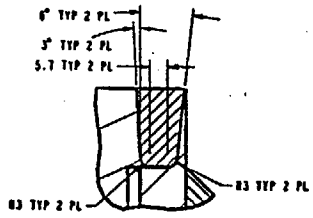

DETAIL D

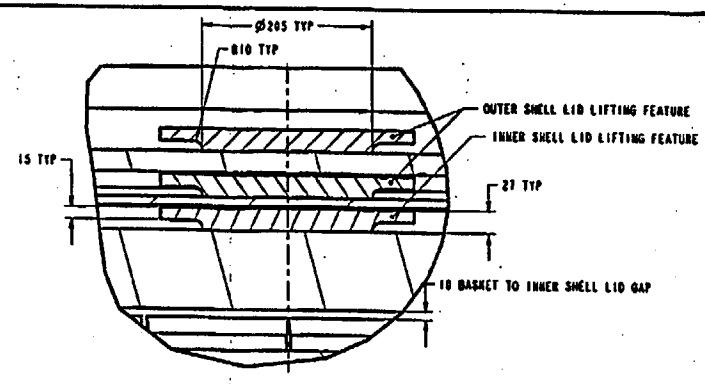

DETAIL C

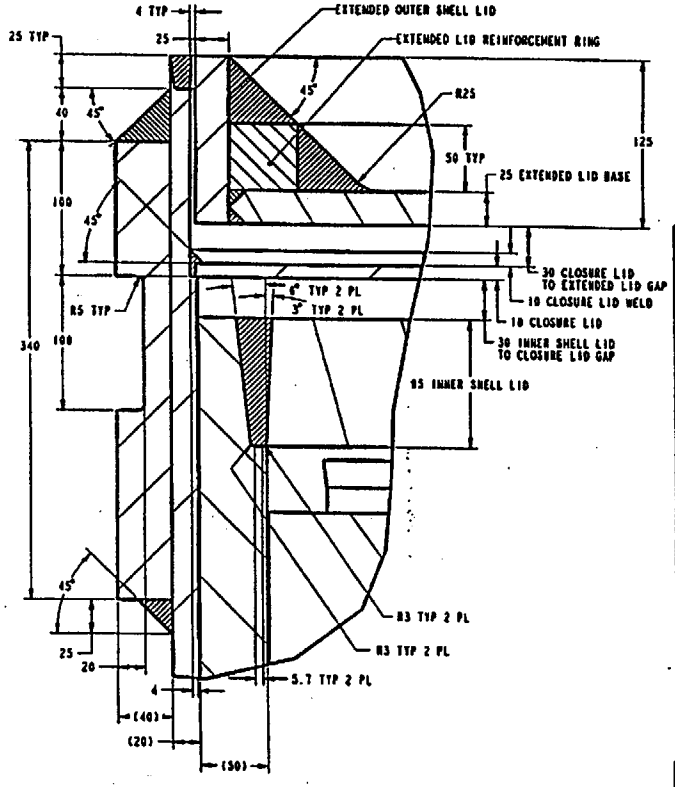

DETAIL A

COMPONENT NAME	MATERIAL	THICKNESS	MASS (KG)	QTY REQ
BASKET B-SIDEGUIDE	SA-516 K02700	10	19	32
BASKET B-STIFFENER	SA-516 K02700	10	0.31	64
BASKET CORNERGUIDE	SA-516 K02700	10	46	32
BASKET STIFFENER	SA-516 K02700	10	2.7	64
FUEL BASKET A-PLATE	NEUTRONIT A 978	5	63	4
FUEL BASKET B-PLATE	NEUTRONIT A 978	5	63	4
FUEL BASKET C-PLATE	NEUTRONIT A 978	5	15	16
FUEL BASKET D-PLATE	NEUTRONIT A 978	5	44	16
FUEL BASKET E-PLATE	NEUTRONIT A 978	5	44	16
FUEL BASKET F-PLATE	SB-209 A96061 T4	5	21	8
FUEL BASKET G-PLATE	SB-209 A96061 T4	5	21	8
FUEL BASKET TUBE	SA-516 K02700	5	113	44
INNER SHELL	SA-240 S31600	50	8886	1
INNER SHELL LID	SA-240 S31600	95	1251	2
INNER SHELL LID LIFTING FEATURE	SA-240 S31600	27	12	1
OUTER SHELL	SB-575 N06022	20	4275	1
EXTENDED OUTER SHELL LID	SB-575 N06022	25	135	1
EXTENDED OUTER SHELL LID BASE	SB-575 N06022	25	361	1
OUTER SHELL LID LIFTING FEATURE	SB-575 N06022	27	13	2
EXTENDED LID REINFORCEMENT RING	SB-575 N06022	50	99	1
OUTER SHELL FLAT CLOSURE LID	SB-575 N06022	10	165	1
OUTER SHELL FLAT BOTTOM LID	SB-575 N06022	25	412	1
UPPER TRUNNION COLLAR SLEEVE	SB-575 N06022	40	517	1
LOWER TRUNNION COLLAR SLEEVE	SB-575 N06022	40	507	1
INNER SHELL SUPPORT RING	SB-575 N06022	20	42	1
TOTAL ALLOY 22 WELDS	SFA-5.14 N06022	-	253	[ ]
TOTAL 316 WELDS	SFA-5.9 S31680	-	131	[ ]
WASTE PACKAGE ASSEMBLY	-	-	28066	1
BWR FUEL ASSEMBLY	-	-	328.4[ ]	44
WASTE PACKAGE ASSEMBLY WITH SNF	-	-	42517	1

THE CALIBRATED INFORMATION WAS NOT USED AND DOES NOT IMPACT THE TECHNICAL CONTENT OF THE DOCUMENT.

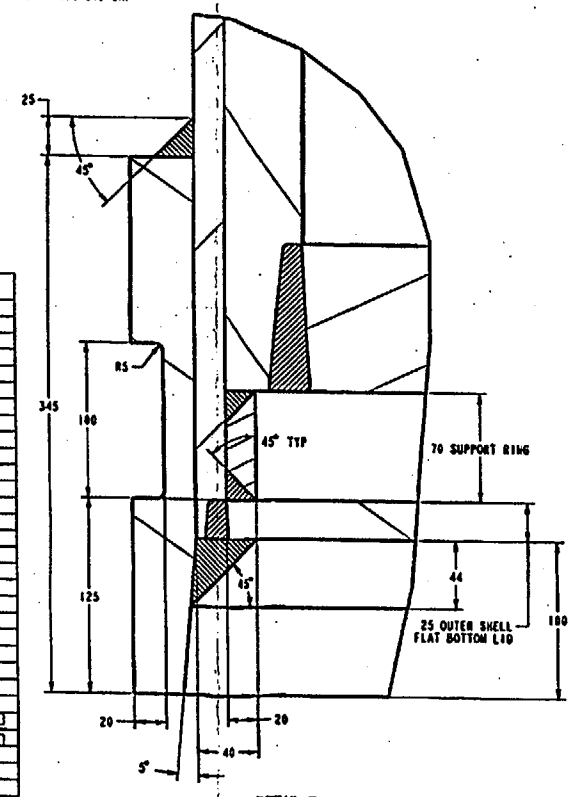

DETAIL B

SK-0102 REV 00 | SHEET 2 OF 2

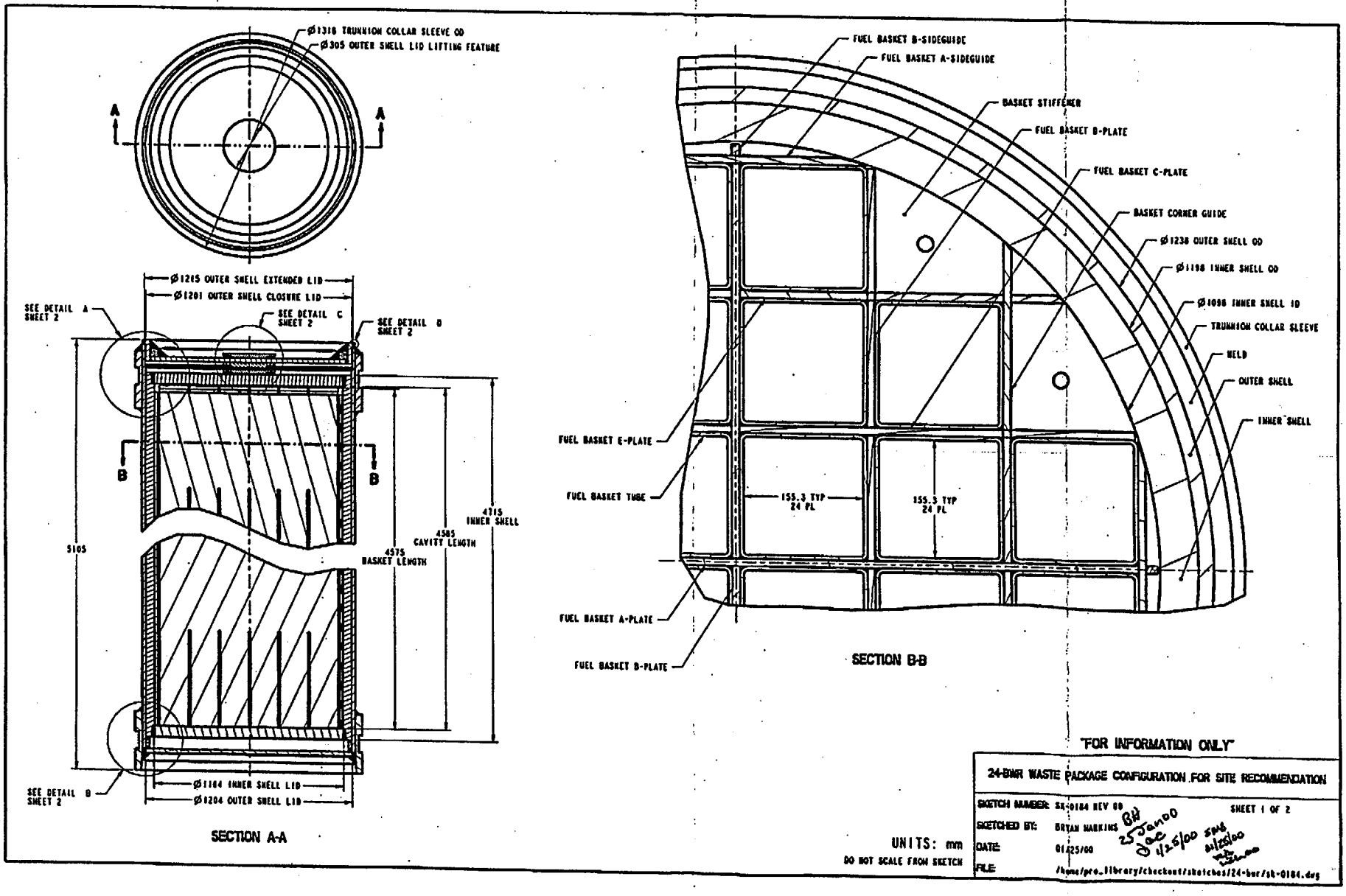
Ø1318 TRUNNION COLLAR SLEEVE OD
Ø305 OUTER SHELL LID LIFTING FEATURE
A
A
Ø1215 OUTER SHELL EXTENDED LID
Ø1201 OUTER SHELL CLOSURE LID
SEE DETAIL A SHEET 2
SEE DETAIL C SHEET 2
SEE DETAIL D SHEET 2
B
B
5105
4715 INNER SHELL
4585 CAVITY LENGTH
4575 BASKET LENGTH
SEE DETAIL B SHEET 2
Ø1184 INNER SHELL LID
Ø1204 OUTER SHELL LID
SECTION A-A
FUEL BASKET B-SIDEGUIDE
FUEL BASKET A-SIDEGUIDE
BASKET STIFFENER
FUEL BASKET B-PLATE
FUEL BASKET C-PLATE
BASKET CORNER GUIDE
Ø1238 OUTER SHELL OD
Ø1198 INNER SHELL OD
Ø1098 INNER SHELL ID
TRUNNION COLLAR SLEEVE
WELD
OUTER SHELL
INNER SHELL
FUEL BASKET E-PLATE
FUEL BASKET TUBE
155.3 TYP 24 PL
155.3 TYP 24 PL
FUEL BASKET A-PLATE
FUEL BASKET B-PLATE
SECTION B-B
"FOR INFORMATION ONLY"
24-BWR WASTE PACKAGE CONFIGURATION FOR SITE RECOMMENDATION
SKETCH NUMBER: SK-0184 REV 00
SHEET 1 OF 2
SKETCHED BY: BRYAN HARKINS
DATE: 01/25/00
FILE: /home/pro_library/checkout/sketches/24-bwr/sk-0184.dwg
UNITS: mm
DO NOT SCALE FROM SKETCH

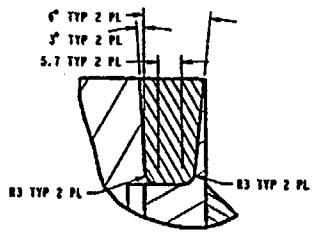

DETAIL D

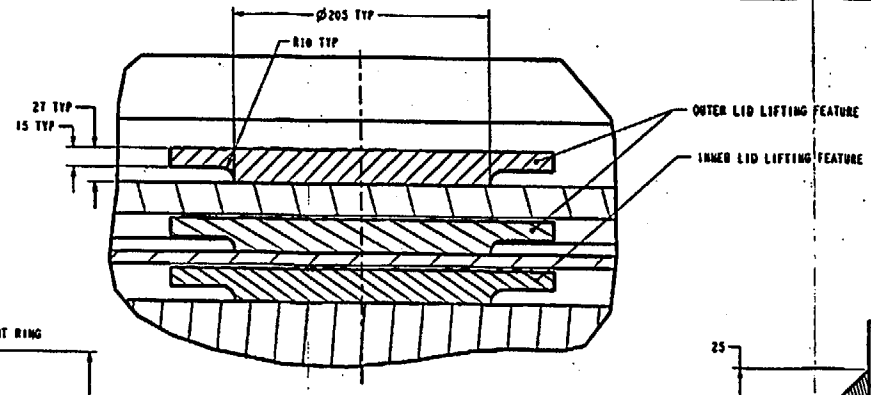

DETAIL C

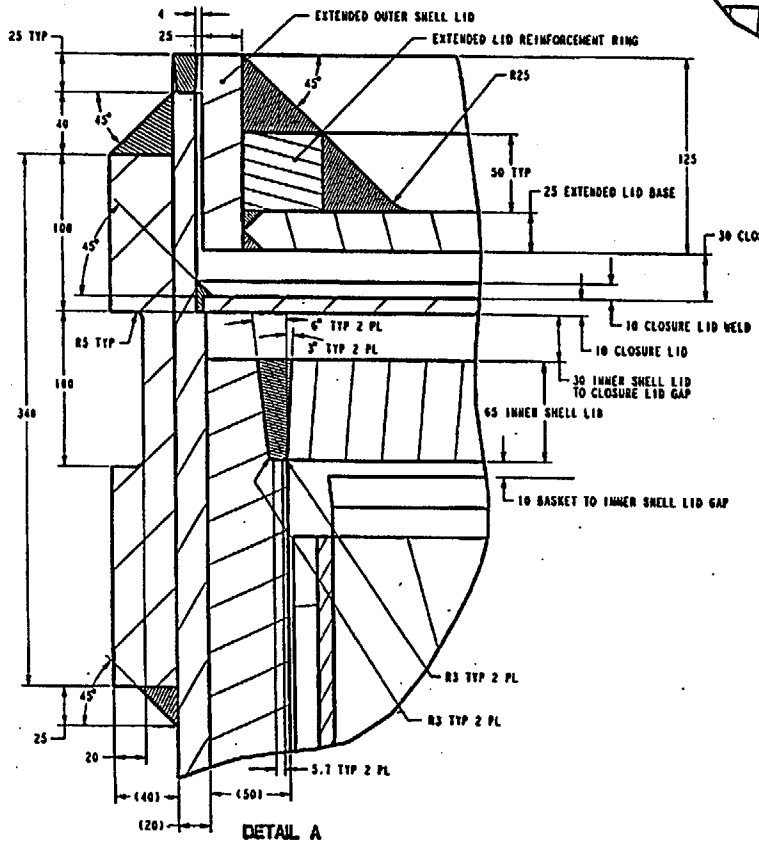

DETAIL A

COMPONENT NAME	MATERIAL	THICKNESS	MASS (KG)	QTY (NO)
BASKET A-GUIDE	SA-516 K02700	10	27	16
BASKET B-GUIDE	SA-516 K02700	10	1.3	16
BASKET CORNER GUIDE	SA-516 K02700	10	22	32
BASKET STIFFENER	SA-516 K02700	10	1.6	64
FUEL BASKET A-PLATE	NEUTRONIT A 978	10	89	4
FUEL BASKET B-PLATE	NEUTRONIT A 978	10	89	4
FUEL BASKET C-PLATE	NEUTRONIT A 978	10	90	8
FUEL BASKET D-PLATE	NEUTRONIT A 978	10	90	8
FUEL BASKET E-PLATE	NEUTRONIT A 978	10	30	16
FUEL BASKET TUBE	SA-516 K02700	5	113	24
INNER SHELL	SA-240 S31600	50	6731	1
INNER SHELL LID	SA-240 S31600	65	489	2
INNER SHELL LID LIFTING FEATURE	SA-240 S31600	27	12	1
OUTER SHELL	SB-575 N06022	20	3268	1
EXTENDED OUTER SHELL LID	SB-575 N06022	25	103	1
EXTENDED OUTER SHELL LID BASE	SB-575 N06022	25	221	1
OUTER SHELL LID LIFTING FEATURE	SB-575 N06022	27	13	2
EXTENDED LID REINFORCEMENT RING	SB-575 N06022	50	75	1
OUTER SHELL FLAT CLOSURE LID	SB-575 N06022	10	98	1
OUTER SHELL FLAT BOTTOM LID	SB-575 N06022	25	245	1
UPPER TRUNNION COLLAR SLEEVE	SB-575 N06022	40	404	1
LOWER TRUNNION COLLAR SLEEVE	SB-575 N06022	40	396	1
INNER SHELL SUPPORT RING	SB-575 N06022	20	32	1
TOTAL ALLOY 22 WELDS	SFA-5.14 N06022	-	494	[illegible]
TOTAL 316 WELDS	SFA-5.9 S31600	-	59	[illegible]
WASTE PACKAGE ASSEMBLY	-	-	19437	1
BWR FUEL ASSEMBLY	-	-	[illegible]328.4	24
WASTE PACKAGE ASSEMBLY WITH SNF	-	-	27318	1

THE OBLITERATED INFORMATION WAS NOT USED AND DOES NOT IMPACT THE TECHNICAL CONTENT OF THE DOCUMENT.

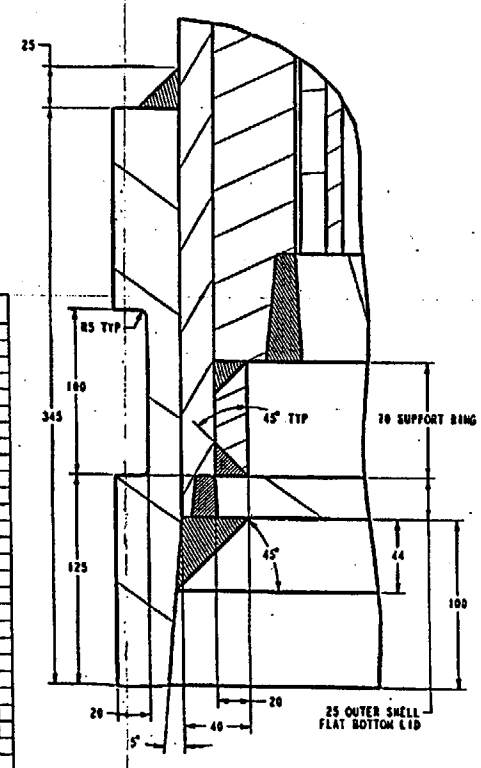

DETAIL B

SK-0184 REV 00 | SHEET 2 OF 2

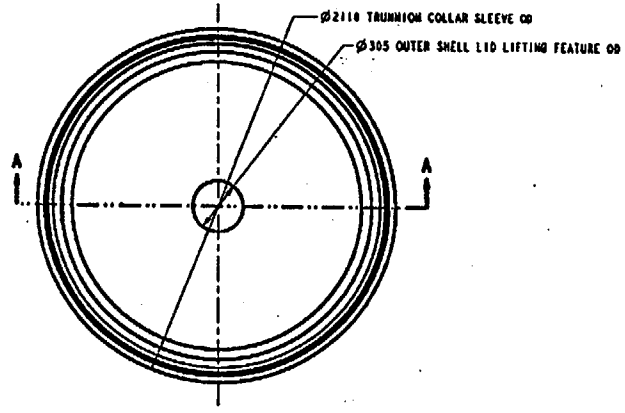

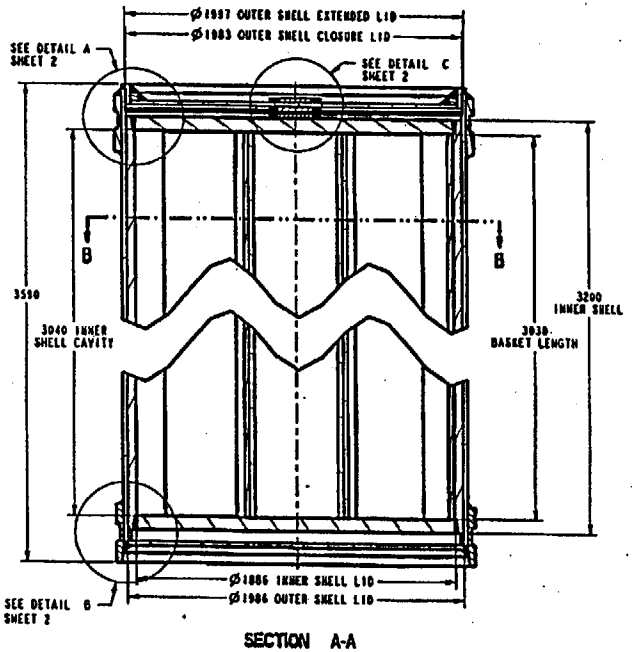

SECTION A-A

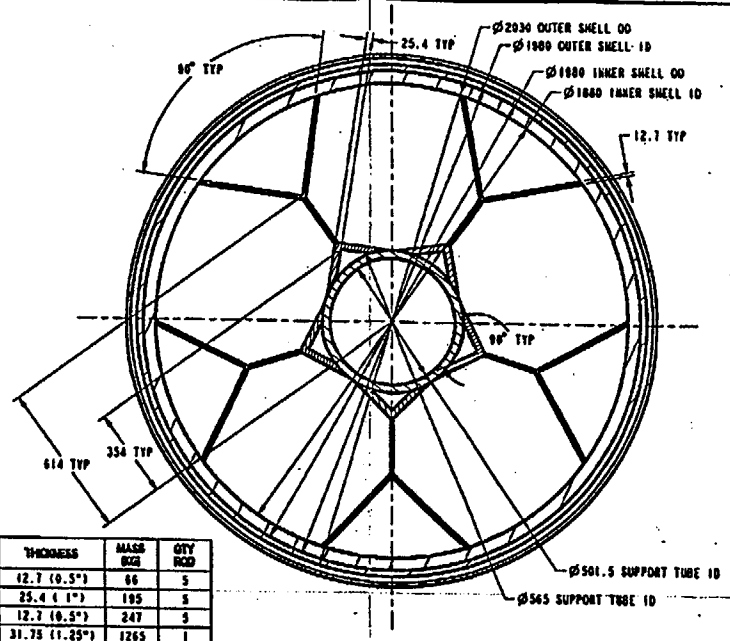

SECTION B-B

COMPONENT NAME	MATERIAL	THICKNESS	MASS (KG)	QTY (NO)
DIVIDER PLATE	SA-516 K02700	12.7 (0.5")	66	5
INNER BRACKET	SA-516 K02700	25.4 (1")	195	5
OUTER BRACKET	SA-516 K02700	12.7 (0.5")	247	5
SUPPORT TUBE	SA-516 K02700	31.75 (1.25")	1265	1
INNER SHELL	SA-240 S31600	50	7621	1
INNER SHELL LID	SA-240 S31600	80	1765	2
INNER LID LIFTING FEATURE	SA-240 S31600	27	12	1
OUTER SHELL	SB-575 N06022	25	4692	1
EXTENDED OUTER SHELL LID	SB-575 N06022	25	172	1
EXTENDED OUTER SHELL LID BASE	SB-575 N06022	25	620	1
EXTENDED OUTER LID REINFORCING RING	SB-575 N06022	50	129	1
OUTER LID LIFTING FEATURE	SB-575 N06022	27	13	2
OUTER SHELL FLAT CLOSURE LID	SB-575 N06022	10	248	1
OUTER SHELL FLAT BOTTOM LID	SB-575 N06022	25	669	1
UPPER TRUNNION COLLAR SLEEVE	SB-575 N06022	40	655	1
LOWER TRUNNION COLLAR SLEEVE	SB-575 N06022	40	642	1
INNER SHELL SUPPORT RING	SB-575 N06022	20	53	1
TOTAL ALLOY 22 WELDS	SFA-5.14 N06022	-	325	[illegible]
TOTAL 316 WELDS	SFA-5.9 S31600	-	133	[illegible]
WASTE PACKAGE ASSEMBLY	-	-	23368	1
HLW GLASS ASSEMBLY	-	-	2590[illegible]	5
18" CANISTER SHORT	-	-	2270[illegible]	1
WP ASSEMBLY WITH SNF	-	-	38138	-

THE OBLITERATED INFORMATION WAS NOT USED AND DOES NOT IMPACT THE TECHNICAL CONTENT OF THE DOCUMENT.

UNITS: mm

DO NOT SCALE FROM SKETCH

"FOR INFORMATION ONLY"

5 DHLW/DOE SNF - SHORT WP ASSSEMBLY CONFIGURATION FOR SITE RECOMENDATION

SKETCH NUMBER: SK-0196 REV 00 SHEET 1 OF 2

ORIGINATOR: DANIEL G MCKENZIE IV 01/26/00

DATE: 01/26/00

FILE: /home/pro_library/checkout/sketches/5dhlw/sow_short/sk-0196.dwg

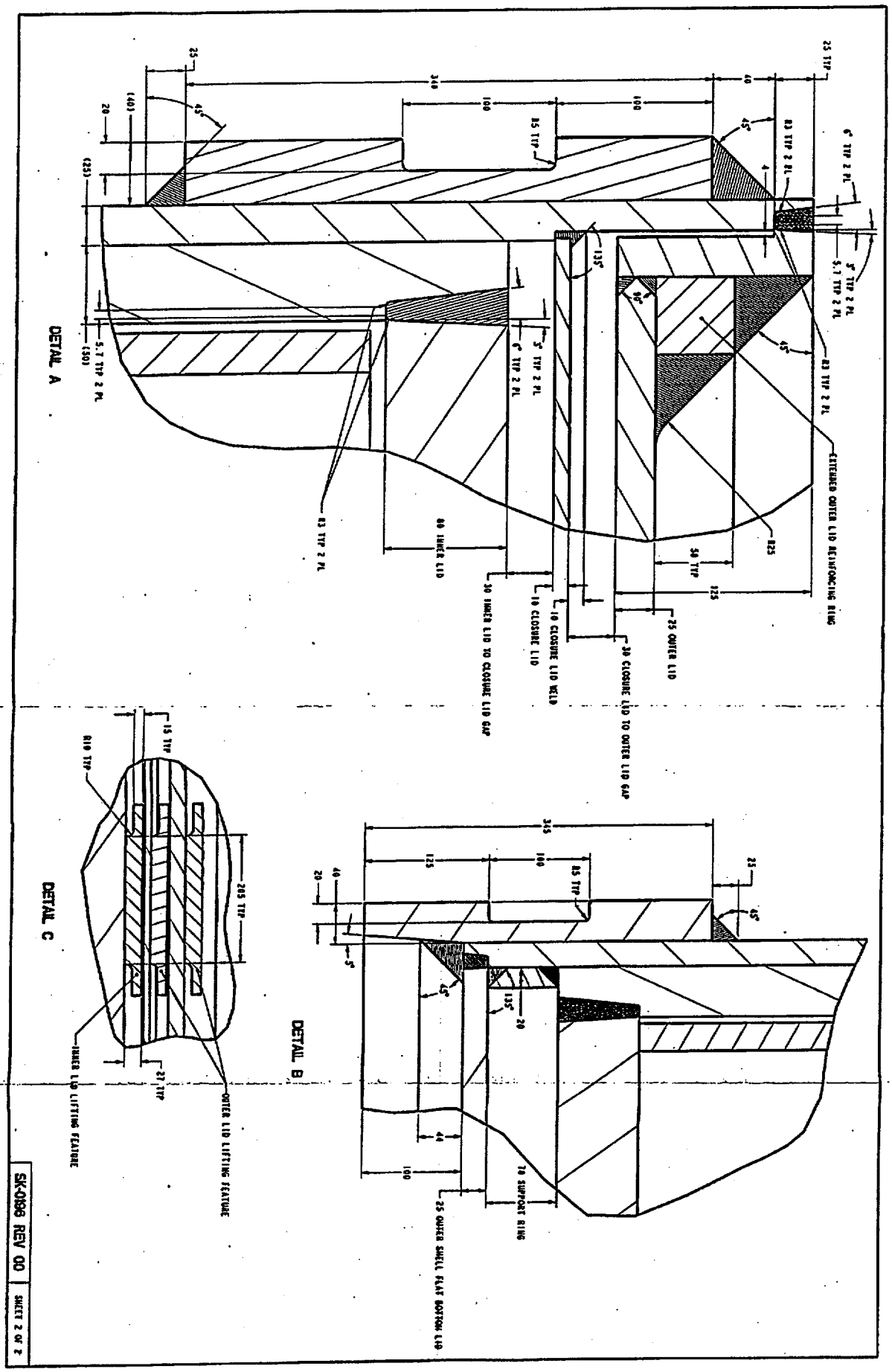
DETAIL A
DETAIL B
DETAIL C
EXTENDED OUTER LID REINFORCING RING
25 OUTER LID
10 CLOSURE LID WELD
10 CLOSURE LID
30 CLOSURE LID TO OUTER LID GAP
30 INNER LID TO CLOSURE LID GAP
80 INNER LID
25 OUTER SHELL FLAT BOTTOM LID
70 SUPPORT RING
OUTER LID LIFTING FEATURE
INNER LID LIFTING FEATURE
SK-0898 REV 00
SHEET 2 OF 2

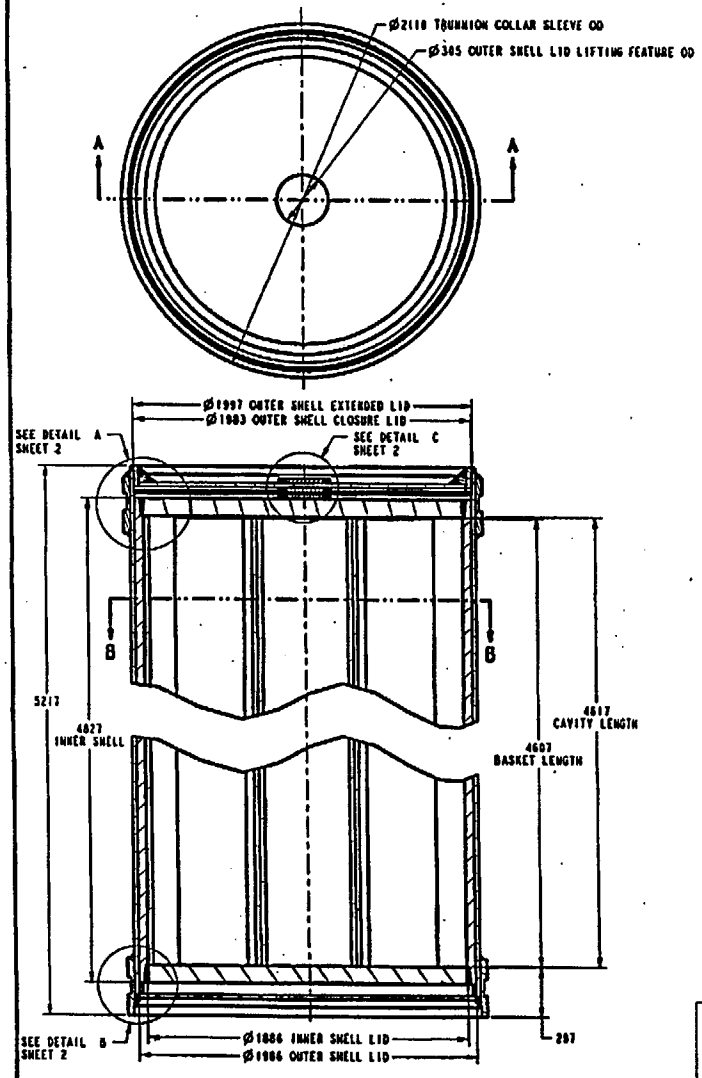

SECTION A-A

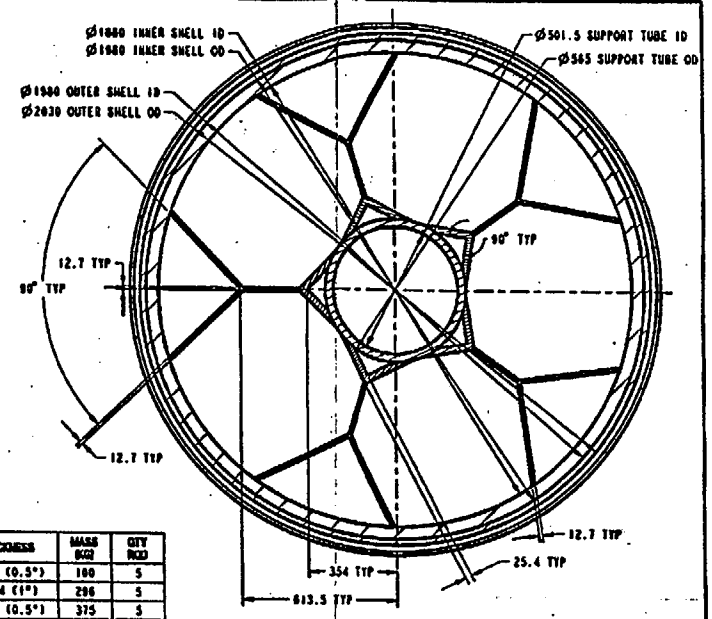

SECTION B-B

COMPONENT NAME	MATERIAL	THICKNESS	MASS (KG)	QTY (NO)
DIVIDER PLATE	SA-516 K02700	12.7 (0.5")	180	5
INNER BRACKET	SA-516 K02700	25.4 (1")	296	5
OUTER BRACKET	SA-516 K02700	12.7 (0.5")	375	5
SUPPORT TUBE	SA-516 K02700	31.75 (1.25")	1024	1
INNER SHELL	SA-240 S31600	50	11507	1
INNER SHELL LID	SA-240 S31600	105	2314	2
INNER LID LIFTING FEATURE	SA-240 S31600	27	12	1
OUTER SHELL	SB-575 N06022	20	6910	1
EXTENDED OUTER SHELL LID	SB-575 N06022	25	172	1
EXTENDED OUTER SHELL LID BASE	SB-575 N06022	25	620	1
EXTENDED LID REINFORCEMENT RING	SB-575 N06022	50	129	1
OUTER LID LIFTING FEATURE	SB-575 N06022	27	13	2
OUTER SHELL FLAT CLOSURE LID	SB-575 N06022	10	268	1
OUTER SHELL FLAT BOTTOM LID	SB-575 N06022	25	669	1
UPPER TRUNNION COLLAR SLEEVE	SB-575 N06022	40	655	1
LOWER TRUNNION COLLAR SLEEVE	SB-575 N06022	40	642	1
INNER SHELL SUPPORT RING	SB-575 N06022	20	53	1
TOTAL ALLOY 22 WELDS	SFA-5.14 N06022	-	325	[illegible]
TOTAL 316 WELDS	SFA-5.9 S31600	-	194	[illegible]
WASTE PACKAGE ASSEMBLY	-	-	32610	1
HLW GLASS ASSEMBLY	-	-	4200[illegible]	5
18" CANISTER LONG	-	-	2721[illegible]	1
WP ASSEMBLY WITH SNF	-	-	56331	-

THE OBLITERATED INFORMATION HAS NOT USED AND DOES NOT IMPACT THE TECHNICAL CONTENT OF THE DOCUMENT.

UNITS: mm

DO NOT SCALE FROM SKETCH

"FOR INFORMATION ONLY"

5 DHLW/DOE SNF - LONG WASTE PACKAGE CONFIGURATION FOR SITE RECOMMENDATION

SKETCH NUMBER: SK-0200 REV 01 SHEET 1 OF 2

ORIGINATOR: DANIEL G MCKENZIE IV

DATE: 6/28/00

FILE: /home/pro_library/ebschool/sketches/5dhlw/con_long/sk-0102rev02.dwg

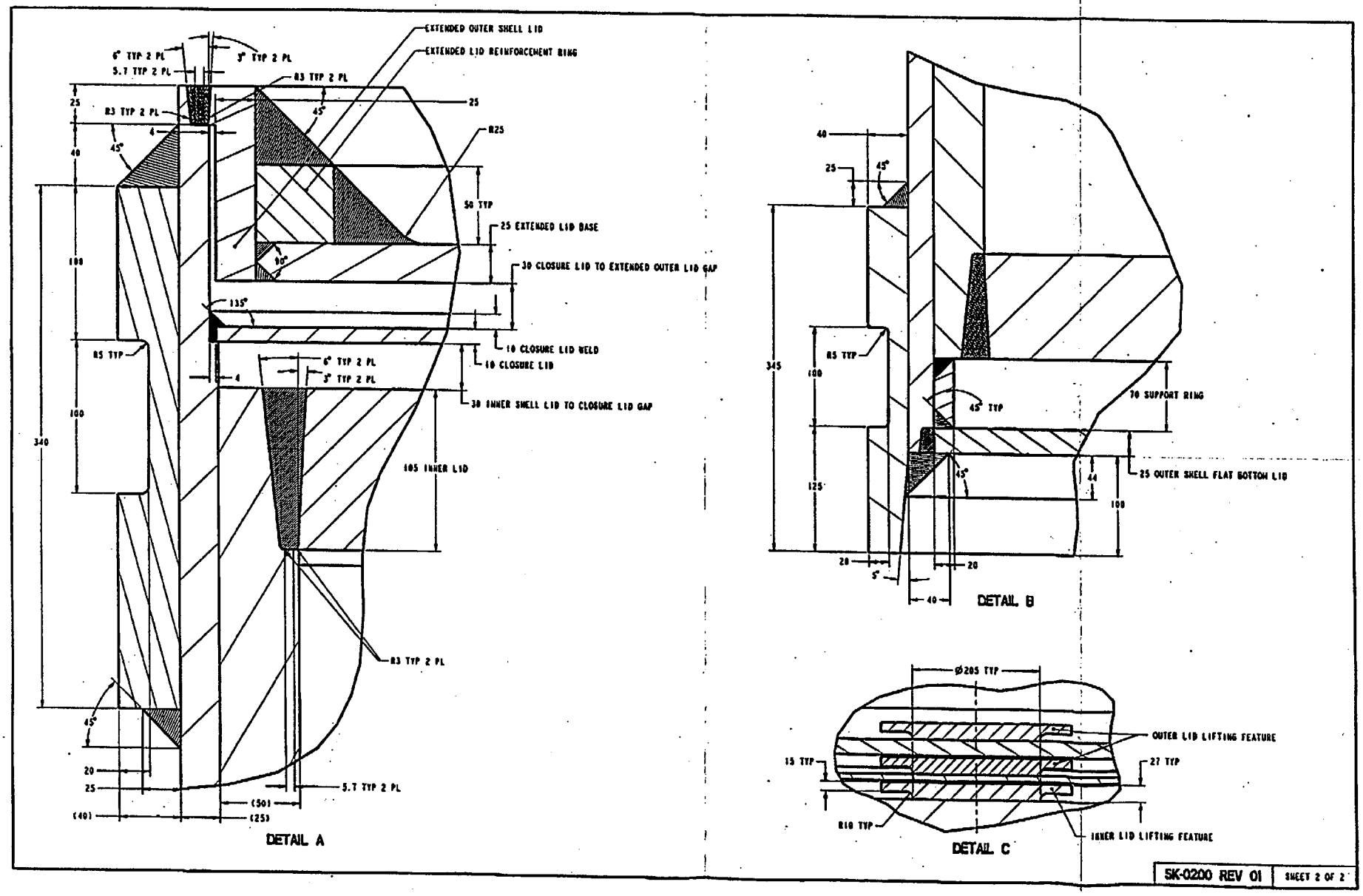
EXTENDED OUTER SHELL LID
EXTENDED LID REINFORCEMENT RING
6° TYP 2 PL
3° TYP 2 PL
5.7 TYP 2 PL
R3 TYP 2 PL
25
R3 TYP 2 PL
4
45°
40
R25
50 TYP
25 EXTENDED LID BASE
90°
30 CLOSURE LID TO EXTENDED OUTER LID GAP
100
135°
10 CLOSURE LID WELD
10 CLOSURE LID
R5 TYP
6° TYP 2 PL
3° TYP 2 PL
4
30 INNER SHELL LID TO CLOSURE LID GAP
100
340
105 INNER LID
R3 TYP 2 PL
45°
20
25
5.7 TYP 2 PL
(50)
(40)
(25)
DETAIL A
40
25
45°
345
100
R5 TYP
70 SUPPORT RING
45° TYP
45°
44
25 OUTER SHELL FLAT BOTTOM LID
125
100
20
20
5°
40
DETAIL B
Ø205 TYP
OUTER LID LIFTING FEATURE
15 TYP
27 TYP
R10 TYP
INNER LID LIFTING FEATURE
DETAIL C
SK-0200 REV 01
SHEET 2 OF 2

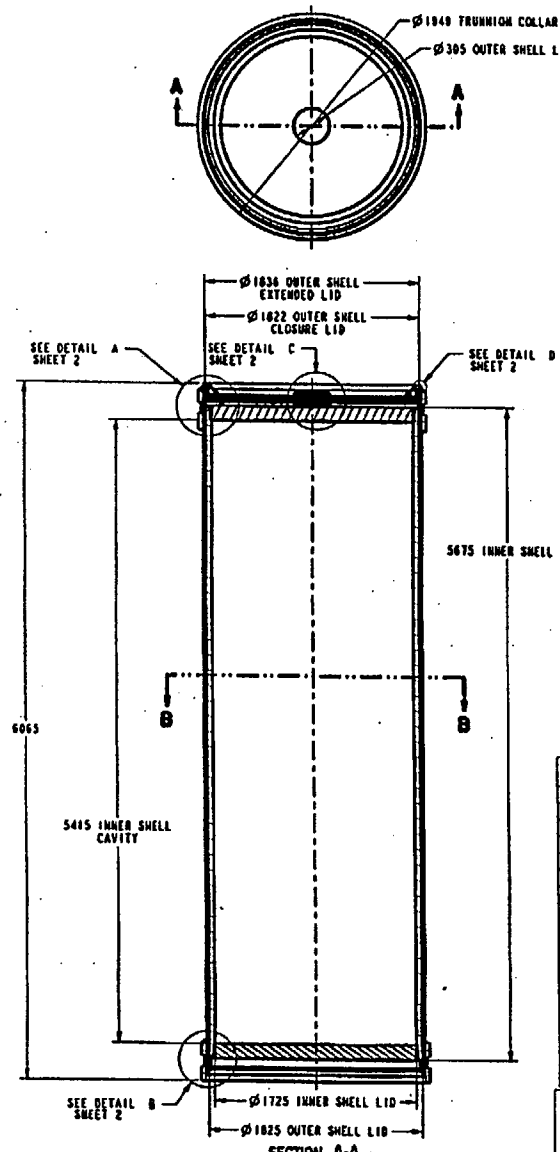

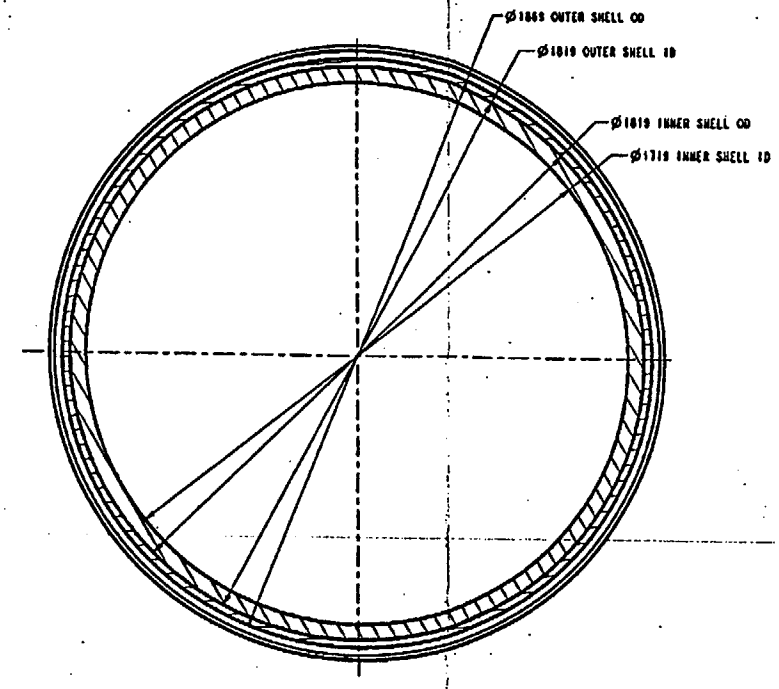

COMPONENT NAME	MATERIAL	THICKNESS	MASS (KG)	QTY REQ
INNER SHELL	SA-240 S31600	50	12372	1
INNER SHELL LID	SA-240 S31600	130	2390	2
INNER LID LIFTING FEATURE	SA-240 S31600	27	12	1
OUTER SHELL	SB-575 N06022	25	7430	1
EXTENDED OUTER SHELL LID	SB-575 N06022	25	158	1
EXTENDED OUTER SHELL LID BASE	SB-575 N06022	25	528	1
EXTENDED LID REINFORCEMENT RING	SB-575 N06022	50	116	1
OUTER LID LIFTING FEATURE	SB-575 N06022	27	13	2
OUTER SHELL FLAT CLOSURE LID	SB-575 N06022	10	227	1
OUTER SHELL FLAT BOTTOM LID	SB-575 N06022	25	564	1
UPPER TRUNNION COLLAR SLEEVE	SB-575 N06022	40	604	1
LOWER TRUNNION COLLAR SLEEVE	SB-575 N06022	40	592	1
INNER SHELL SUPPORT RING	SB-575 N06022	20	49	1
TOTAL ALLOY 22 WELDS	SFA-5.14 N06022	-	298	[illegible]
TOTAL 316 WELDS	SFA-5.9 S31600	-	243	[illegible]
WASTE PACKAGE ASSEMBLY	-	-	28005	1
NAVAL SNF	-	-	44452	1
WASTE PACKAGE WITH SNF	-	-	72457	1

THE OBLITERATED INFORMATION WAS NOT USED AND DOES NOT IMPACT THE TECHNICAL CONTENT OF THE DOCUMENT.

UNITS: mm

DO NOT SCALE FROM SKETCH

"FOR INFORMATION ONLY"

NAVAL SNF LONG WASTE PACKAGE CONFIGURATION FOR SITE RECOMMENDATION

SKETCH NUMBER: SK-0194 REV 01 SHEET 1 OF 2

SKETCHED BY: GENE CONNELL 1/26/00 SMB 01/26/00 JAC 1/26/00

DATE: 01/11/00

FILE: /home/pro_library/checkout/sketches/navsf/navsf bof long/SK-0194.dwg

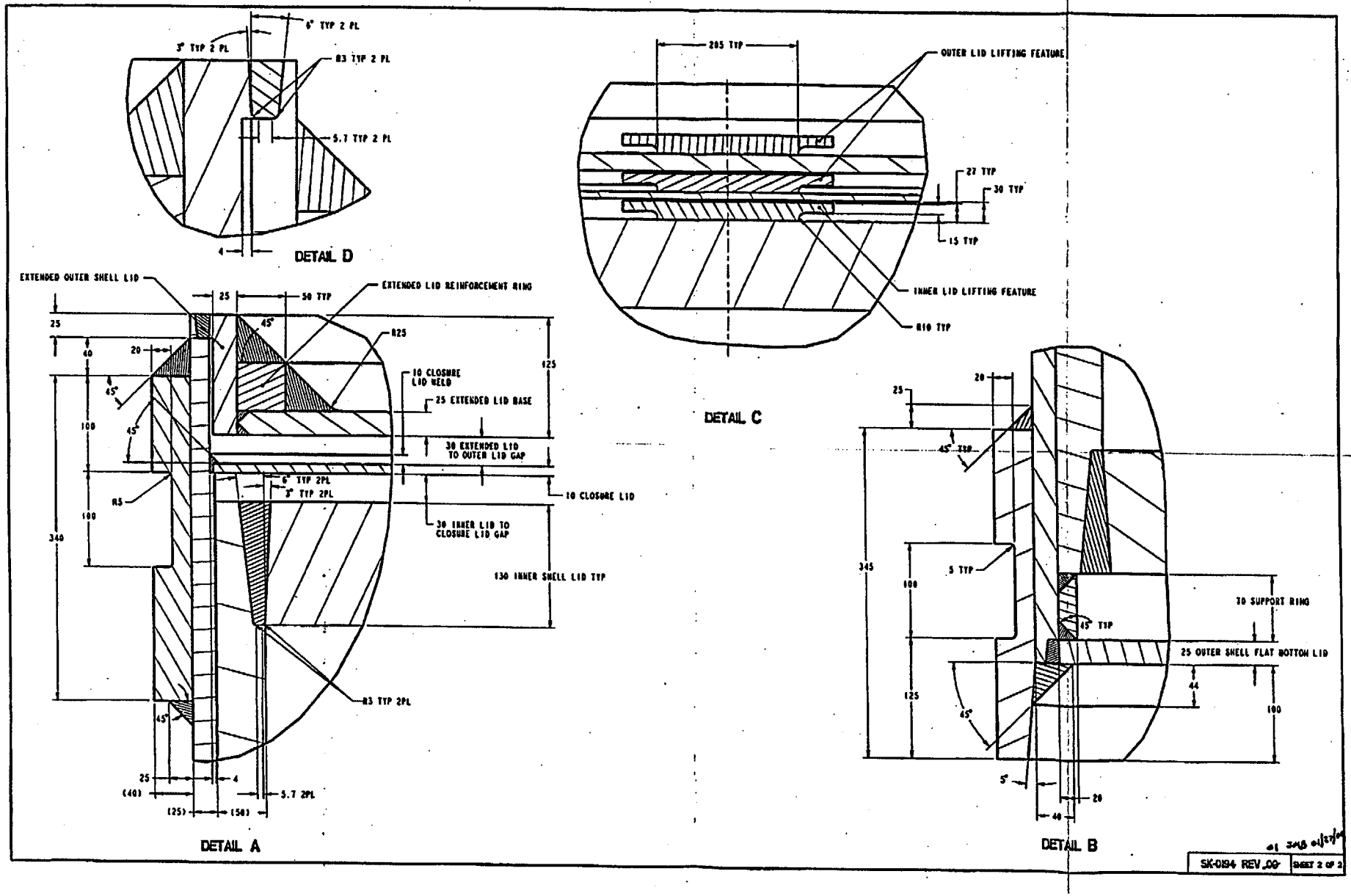
6° TYP 2 PL
3° TYP 2 PL
R3 TYP 2 PL
5.7 TYP 2 PL
4
DETAIL D
EXTENDED OUTER SHELL LID
EXTENDED LID REINFORCEMENT RING
25
50 TYP
45°
R25
20
40
10 CLOSURE LID WELD
125
25 EXTENDED LID BASE
100
30 EXTENDED LID TO OUTER LID GAP
R5
6° TYP 2PL
3° TYP 2PL
10 CLOSURE LID
30 INNER LID TO CLOSURE LID GAP
340
130 INNER SHELL LID TYP
R3 TYP 2PL
(40)
(25)
(50)
5.7 2PL
DETAIL A
285 TYP
OUTER LID LIFTING FEATURE
27 TYP
30 TYP
15 TYP
INNER LID LIFTING FEATURE
R10 TYP
DETAIL C
345
5 TYP
10 SUPPORT RING
25 OUTER SHELL FLAT BOTTOM LID
44
5°
DETAIL B
SK-0194 REV 00
SHEET 2 OF 2

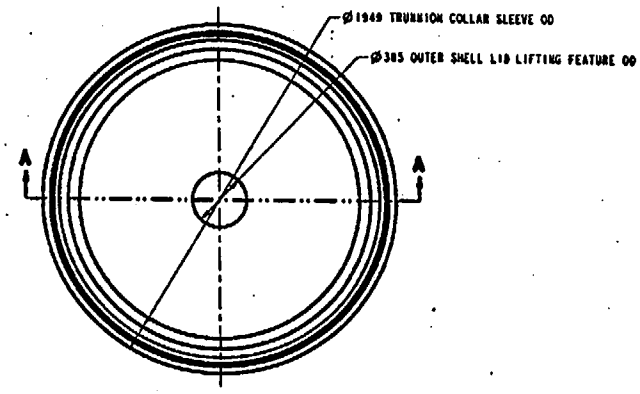

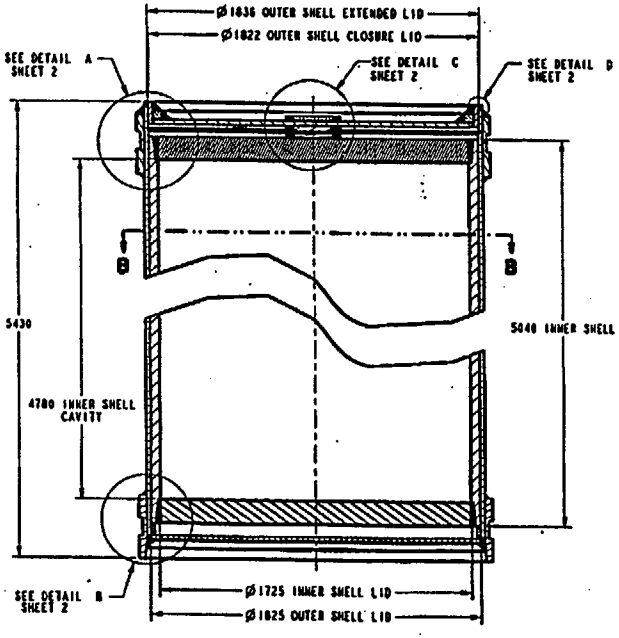

SECTION A-A

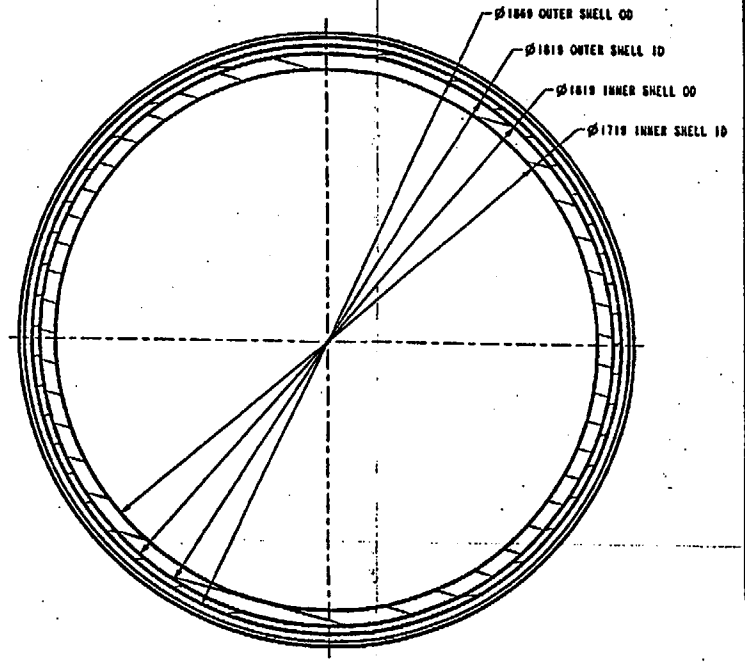

SECTION B-B

COMPONENT NAME	MATERIAL	THICKNESS	MASS (KG)	QTY REQD
INNER SHELL	SA-240 S31600	50	10964	1
INNER SHELL LID	SA-240 S31600	130	2380	2
INNER LID LIFTING FEATURE	SA-240 S31600	27	12	1
OUTER SHELL	SB-575 N06022	25	6631	1
EXTENDED OUTER SHELL LID	SB-575 N06022	25	156	1
EXTENDED OUTER SHELL LID BASE	SB-575 N06022	25	528	1
EXTENDED OUTER SHELL LID REINFORCING RING	SB-575 N06022	50	118	1
OUTER LID LIFTING FEATURE	SB-575 N06022	27	13	2
OUTER SHELL FLAT CLOSURE LID	SB-575 N06022	10	227	1
OUTER SHELL FLAT BOTTOM LID	SB-575 N06022	25	564	1
UPPER TRUNNION COLLAR SLEEVE	SB-575 N06022	40	604	1
LOWER TRUNNION COLLAR SLEEVE	SB-575 N06022	40	592	1
INNER SHELL SUPPORT RING	SB-575 N06022	20	49	1
TOTAL ALLOY 22 WELDS	SFA-5.14 N06022	-	297	
TOTAL 316 WELDS	SFA-5.9 S31600	-	246	
WASTE PACKAGE ASSEMBLY	-	-	25798	1
NAVAL SNF	-	-	44452	1
WASTE PACKAGE WITH SNF	-	-	70250	1

THE OBLITERATED INFORMATION WAS NOT USED AND DOES NOT IMPACT THE TECHNICAL CONTENT OF THE DOCUMENT.

UNITS: mm
DO NOT SCALE FROM SKETCH

"FOR INFORMATION ONLY"

NAVAL SNF SHORT WASTE PACKAGE CONFIGURATION FOR SITE RECOMMENDATION

SKETCH NUMBER: SK-0203 REV 00 SHEET 1 OF 2
SKETCHED BY: MARTIN LEWIS BH for ML 25 Jan 00 JOC 1/25/00 SMB 01/25/00
DATE: 01/25/00
FILE: /home/pro_library/checkout/sketches/naval/naval_short/sk-0203.dwg

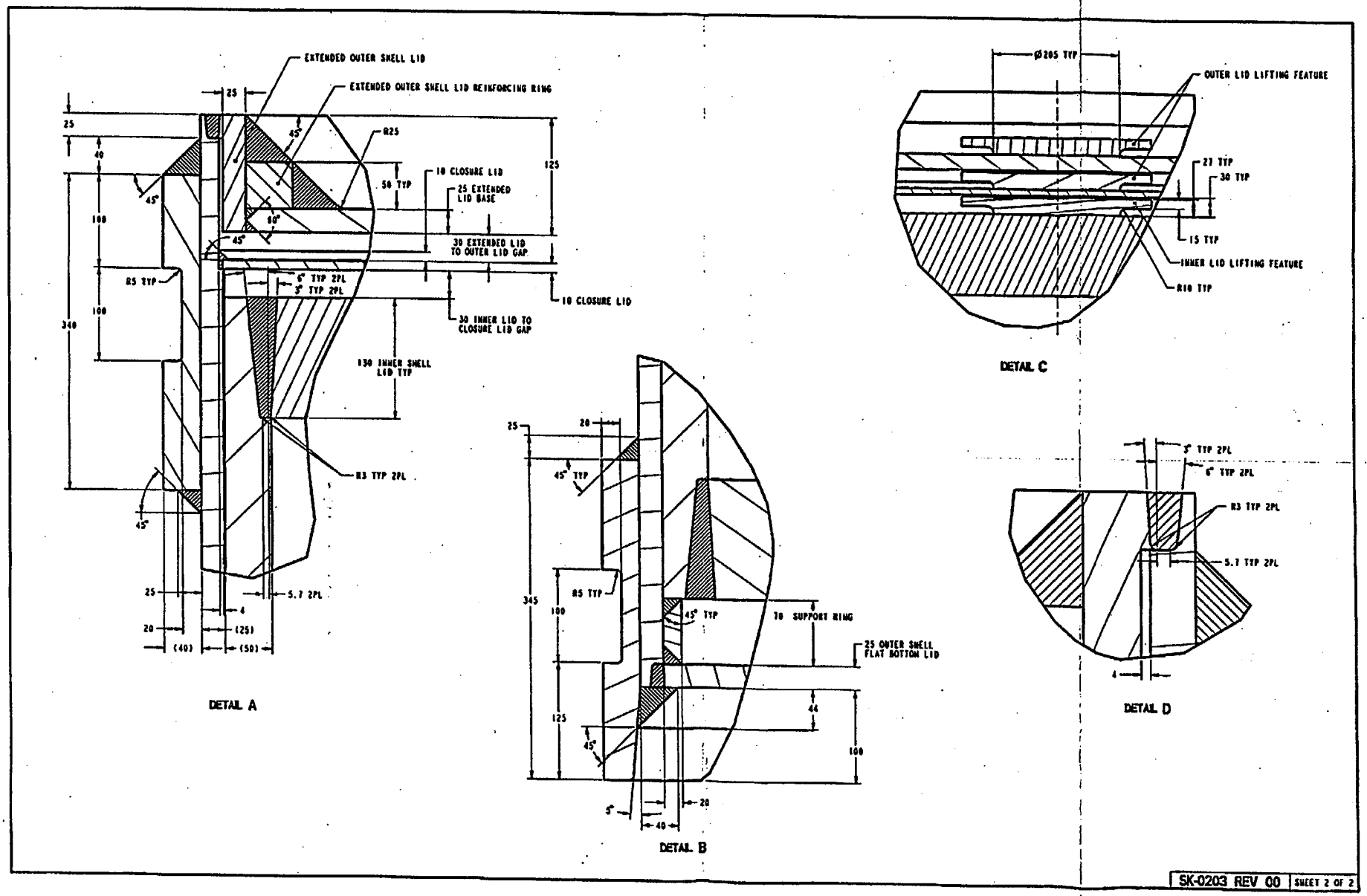
EXTENDED OUTER SHELL LID
EXTENDED OUTER SHELL LID REINFORCING RING
R25
10 CLOSURE LID
50 TYP
25 EXTENDED LID BASE
30 EXTENDED LID TO OUTER LID GAP
6° TYP 2PL
3° TYP 2PL
10 CLOSURE LID
30 INNER LID TO CLOSURE LID GAP
130 INNER SHELL LID TYP
R3 TYP 2PL
R5 TYP
5.7 2PL
DETAIL A
R5 TYP
45° TYP
70 SUPPORT RING
25 OUTER SHELL FLAT BOTTOM LID
DETAIL B
Ø205 TYP
OUTER LID LIFTING FEATURE
27 TYP
30 TYP
15 TYP
INNER LID LIFTING FEATURE
R10 TYP
DETAIL C
3° TYP 2PL
6° TYP 2PL
R3 TYP 2PL
5.7 TYP 2PL
DETAIL D
SK-0203 REV 00
SHEET 2 OF 2

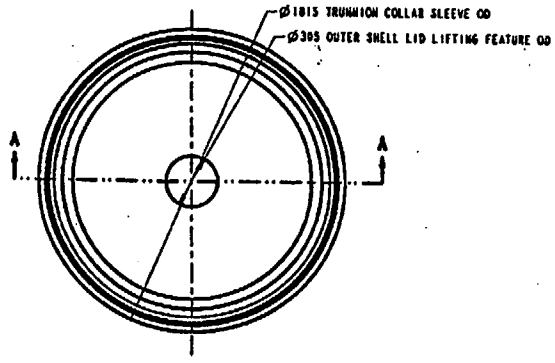

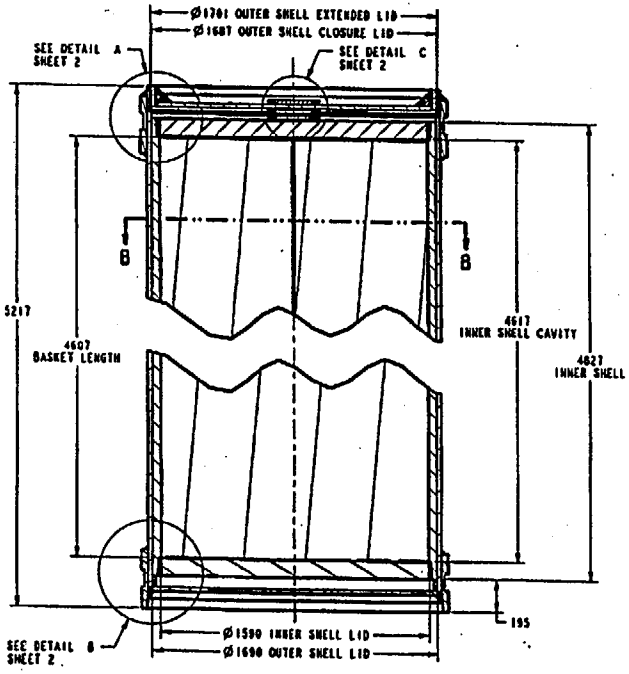

SECTION A-A

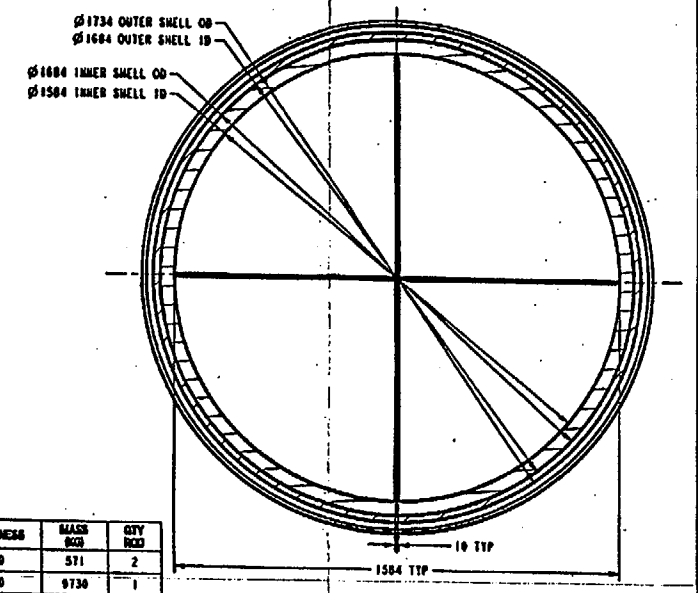

SECTION B-B

COMPONENT NAME	MATERIAL	THICKNESS	MASS (KG)	QTY (NO)
A-PLATE	SA-516 K02700	10	571	2
INNER SHELL	SA-240 S31600	50	9730	1
INNER SHELL LID	SA-240 S31600	105	1647	2
INNER LID LIFTING FEATURE	SA-240 S31600	27	12	1
OUTER SHELL	SB-575 N06022	20	4670	1
EXTENDED OUTER SHELL LID	SB-575 N06022	25	146	1
EXTENDED OUTER SHELL LID BASE	SB-575 N06022	25	450	1
EXTENDED OUTER LID REINFORCING RING	SB-575 N06022	50	108	1
OUTER LID LIFTING FEATURE	SB-575 N06022	27	13	2
OUTER SHELL FLAT CLOSURE LID	SB-575 N06022	10	194	1
OUTER SHELL FLAT BOTTOM LID	SB-575 N06022	25	484	1
UPPER TRUNNION COLLAR SLEEVE	SB-575 N06022	40	558	1
LOWER TRUNNION COLLAR SLEEVE	SB-575 N06022	40	547	1
INNER SHELL SUPPORT RING	SB-575 N06022	20	45	1
TOTAL ALLOY 22 WELDS	SFA-5.14 N06022	-	274	[illegible]
TOTAL 316 WELDS	SFA-5.9 S31600	-	164	[illegible]
WASTE PACKAGE ASSEMBLY	-	-	21846	1
HLW GLASS ASSEMBLY	-	-	4200[illegible]	2
HCO	-	-	6808.4[illegible]	2
WP ASSEMBLY WITH SNF	-	-	48066	1

THE OBLITERATED INFORMATION HAS NOT USED AND DOES NOT IMPACT THE TECHNICAL CONTENT OF THE DOCUMENT.

UNITS: mm

DO NOT SCALE FROM SKETCH

"FOR INFORMATION ONLY"

2 MCO / 2 DHLW WASTE PACKAGE CONFIGURATION FOR SITE RECOMMENDATION

SKETCH NUMBER: SK-0195 REV 00 SHEET 1 OF 2

ORIGINATOR: DANIEL G MCKENZIE IV

DATE: 01/25/00

FILE: /home/pro_library/checkout/sketches/4dmlo/sam_long/sk-0195rev02.dwg

OH for DMK 25 Jan00 1/25/00 SAB 1/25/00

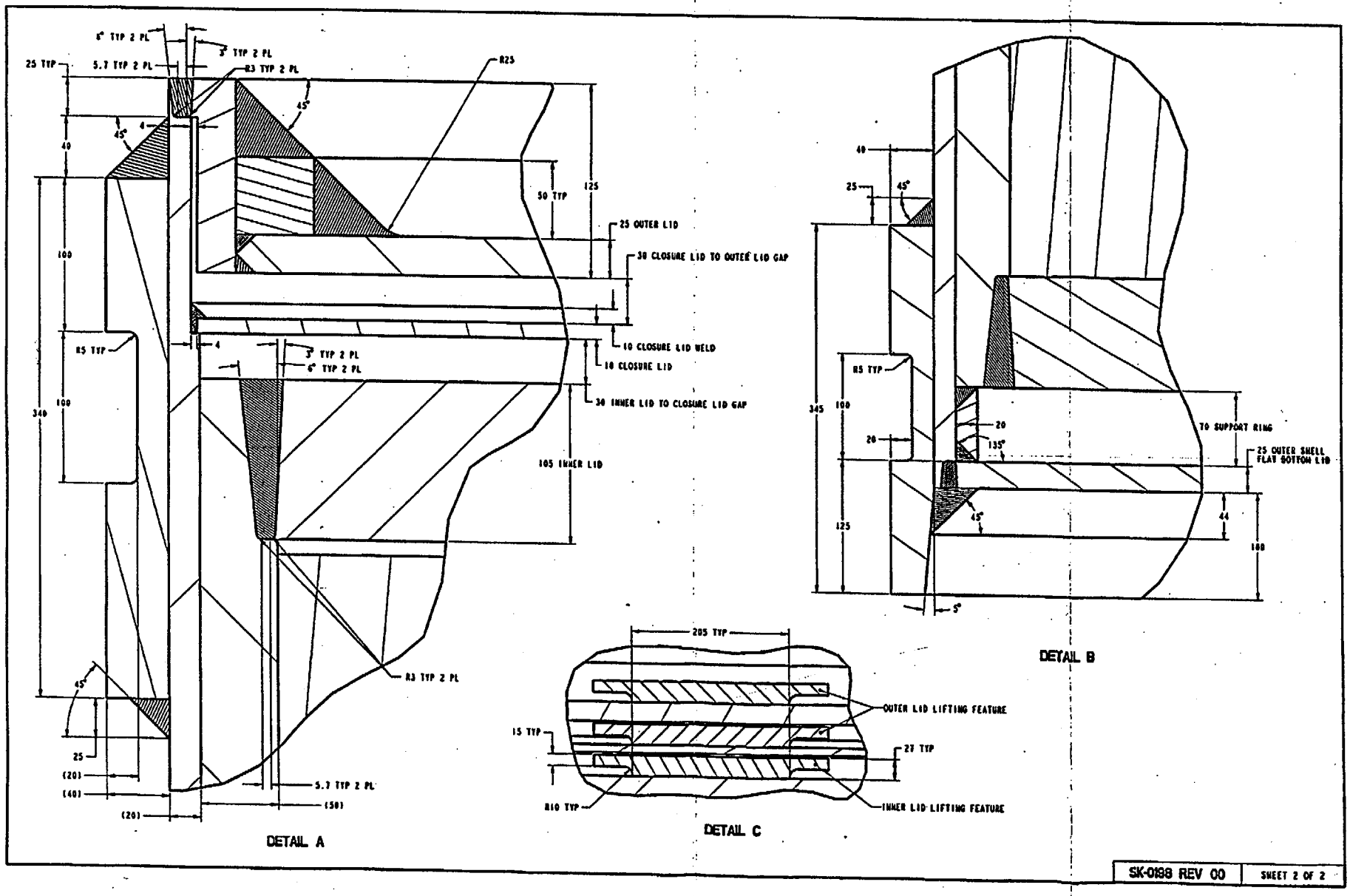
6° TYP 2 PL
3° TYP 2 PL
25 TYP
5.7 TYP 2 PL
R3 TYP 2 PL
R25
45°
4
40
100
R5 TYP
340
50 TYP
125
25 OUTER LID
30 CLOSURE LID TO OUTER LID GAP
10 CLOSURE LID WELD
10 CLOSURE LID
30 INNER LID TO CLOSURE LID GAP
105 INNER LID
R3 TYP 2 PL
25
(20)
(40)
(20)
5.7 TYP 2 PL
(50)
DETAIL A
40
25
45°
R5 TYP
345
100
20
135°
TO SUPPORT RING
25 OUTER SHELL FLAT BOTTOM LID
44
125
100
5°
DETAIL B
205 TYP
OUTER LID LIFTING FEATURE
15 TYP
27 TYP
R10 TYP
INNER LID LIFTING FEATURE
DETAIL C
SK-0198 REV 00
SHEET 2 OF 2

COMPONENT NAME	MATERIAL	THICKNESS	MASS (kg)	QTY REQ
PLATE 01	SB-575 N06022	9.53	64.4	2
PLATE 02	SB-575 N06022	22.2	131	2
PLATE 03	SB-575 N06022	22.2	110	2
PLATE 04	SB-575 N06022	9.53	25.2	4
PLATE 05	SB-575 N06022	25.4	8.14	4
PLATE 06	SB-575 N06022	25.4	151	4
PLATE 07	SB-575 N06022	22.2	1.07	4
PLATE 08	SB-575 N06022	6.35	4.70	4
152.4X152.4X9.53 STAINLESS STEEL TUBE	SA-240 S31603	9.53	102	4
254X76.2X6.35 TUBE	SB-575 N06022	6.35	3.02	4
PALLET ASSEMBLY	--	--	1834	1

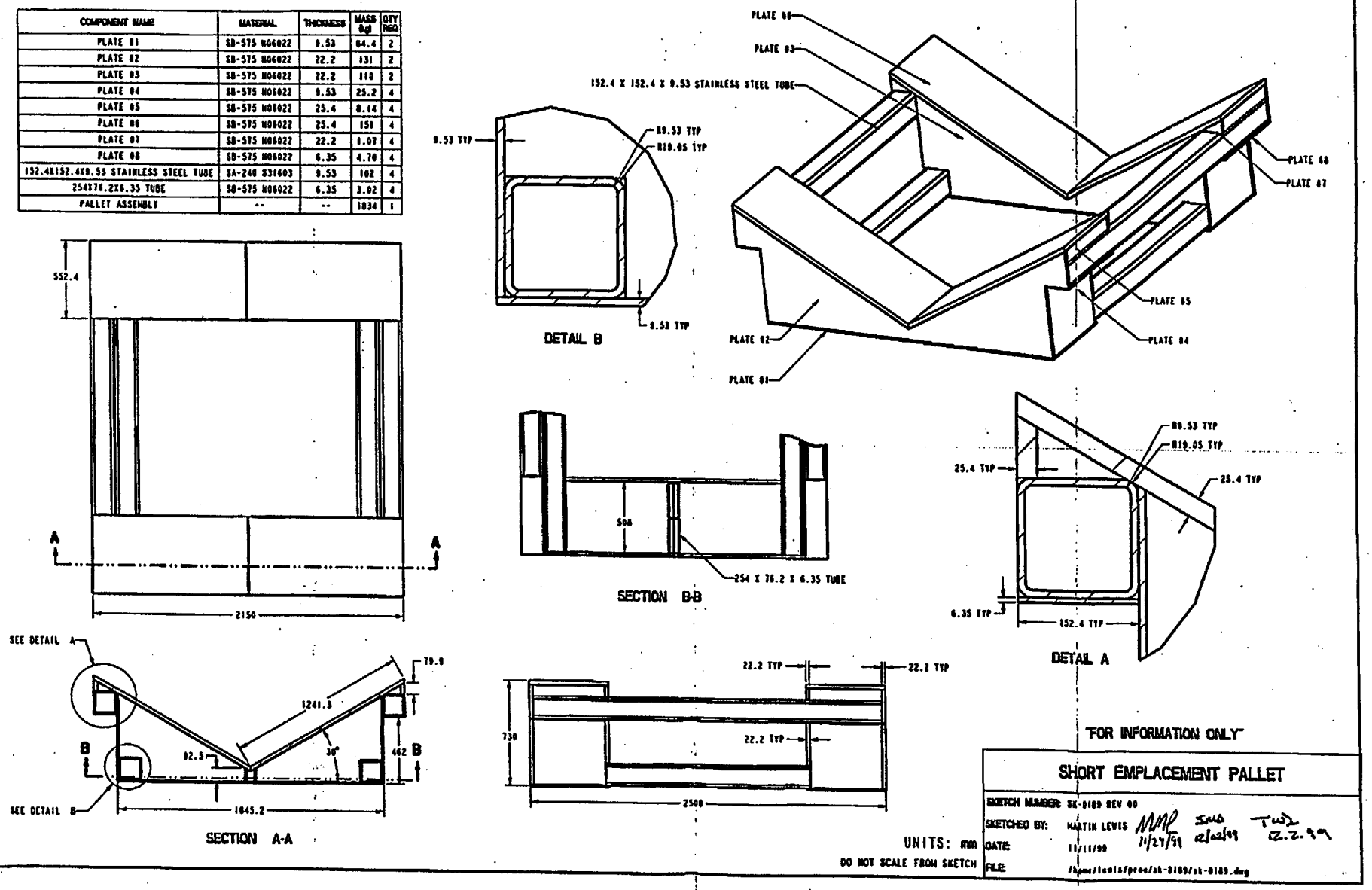

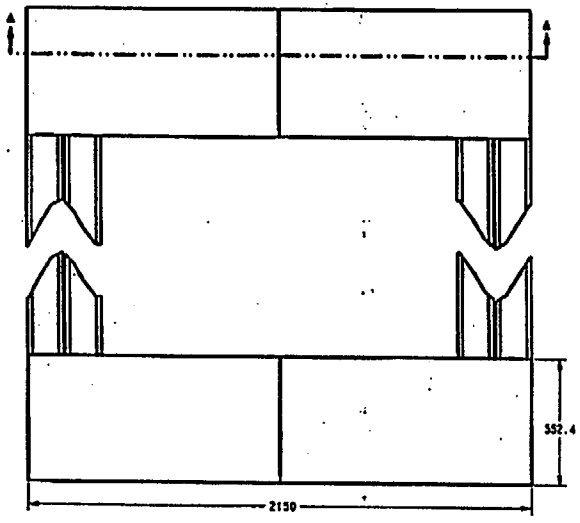

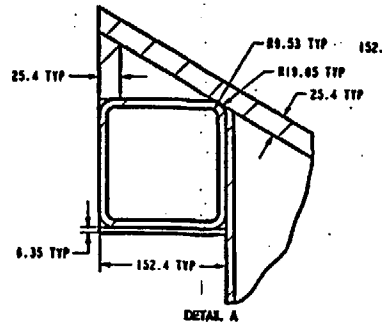

DETAIL A

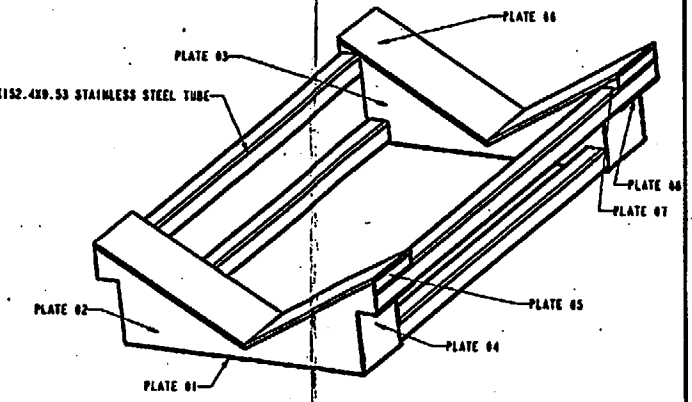

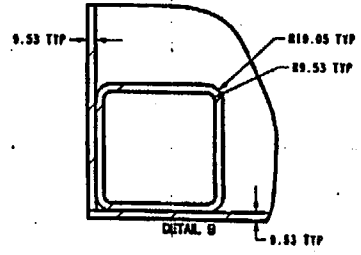

DETAIL B

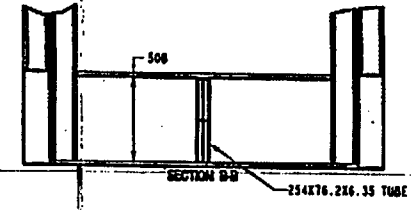

SECTION B-B

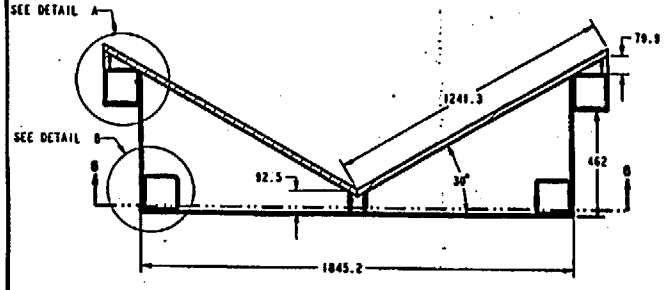

SECTION A-A

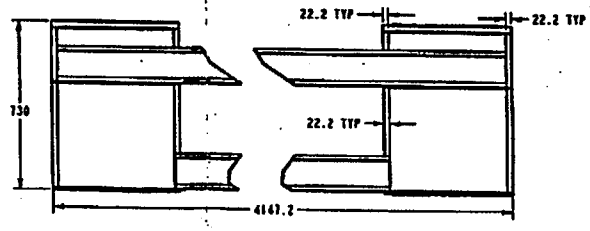

COMPONENT NAME	MATERIAL	THICKNESS	MASS (kg)	QTY REQ
PLATE 01	SB-575 N06022	9.53	64.4	2
PLATE 02	SB-575 N06022	22.2	131	2
PLATE 03	SB-575 N06022	22.2	116	2
PLATE 04	SB-575 N06022	9.53	25.2	4
PLATE 05	SB-575 N06022	25.4	8.14	4
PLATE 06	SB-575 N06022	25.4	151	4
PLATE 07	SB-575 N06022	22.2	1.07	4
PLATE 08	SB-575 N06022	6.35	4.70	4
152.4X152.4X9.53 STAINLESS STEEL TUBE	SA-240 S31603	9.525	171	4
254X76.2X6.35 TUBE	SB-575 N06022	6.35	3.02	4
PALLET ASSEMBLY	--	--	2168	1

"FOR INFORMATION ONLY"

REVISION 01	
ITEM NUMBER	ITEM
1	PLATE 01 MATERIAL CHANGE TO SB-575 N06022
2	64.4 PLATE 01 MASS WAS 77.5 ON DATA TABLE
3	2168 PALLET MASS WAS 2094 ON DATA TABLE

UNITS: mm

DO NOT SCALE FROM SKETCH

EMPLACEMENT PALLET

SKETCH NUMBER: SK-0144 REV 01

SKETCHED BY: ANDREW AILES AA SWB TWD

DATE: 06-12-99 6-13-99 06/16/99 8.18.99

FILE: /home/ailes/proe/0144/0144rev01.dwg

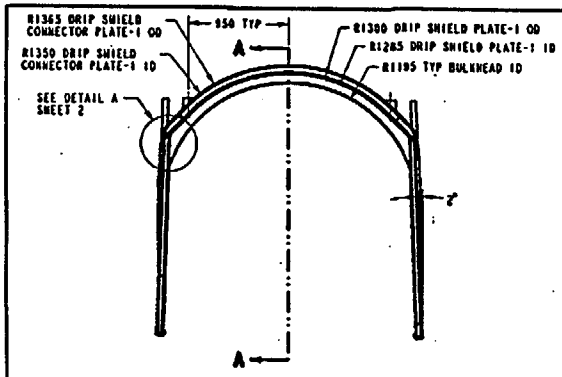

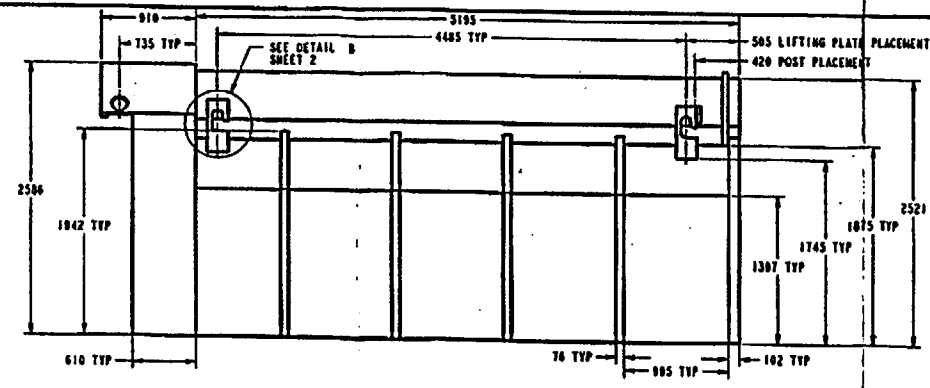

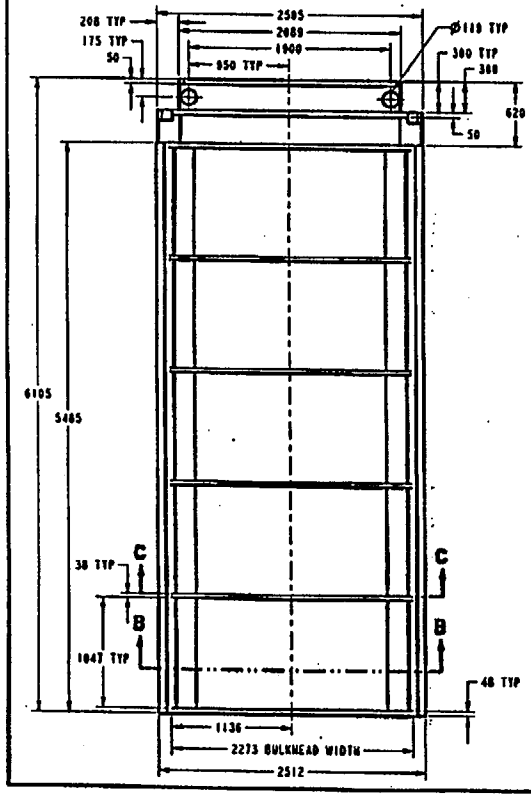

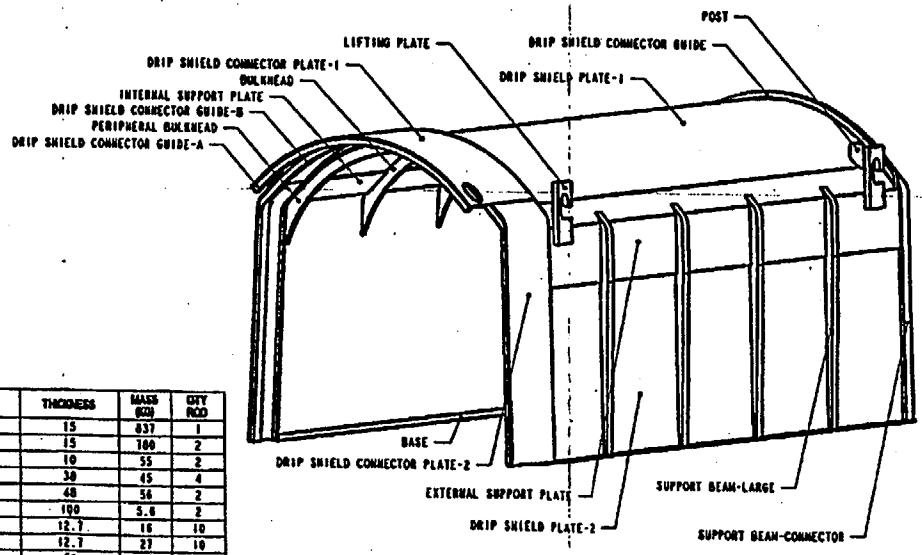

COMPONENT NAME	MATERIAL	THICKNESS	MASS (KG)	QTY /ROD
DRIP SHIELD PLATE-1	SB-265 R52400	15	837	1
DRIP SHIELD PLATE-2	SB-265 R52400	15	700	2
BASE	SB-575 N06022	10	55	2
BULKHEAD	SB-265 R56400	30	45	4
PERIPHERAL BULKHEAD	SB-265 R56400	48	56	2
POST	SB-265 R56400	100	5.6	2
INTERNAL SUPPORT PLATE	SB-265 R52400	12.7	16	10
EXTERNAL SUPPORT PLATE	SB-265 R52400	12.7	27	10
LIFTING PLATE	SB-265 R56400	50	17	4
SUPPORT BEAM-CONNECTOR	SB-265 R56400	102	27	6
SUPPORT BEAM-LARGE	SB-265 R56400	76	37	8
DRIP SHIELD CONNECTOR GUIDE	SB-265 R52400	50	30	2
DRIP SHIELD CONNECTOR PLATE-1	SB-265 R52400	15	142	1
DRIP SHIELD CONNECTOR PLATE-2	SB-265 R52400	15	89	2
DRIP SHIELD CONNECTOR GUIDE-A	SB-265 R52400	50	28	1
DRIP SHIELD CONNECTOR GUIDE-B	SB-265 R52400	50	31	1
DRIP SHIELD ASSEMBLY	-	-	4203	1

UNITS: mm
DO NOT SCALE FROM SKETCH

"FOR INFORMATION ONLY"

SR DRIP SHIELD

SKETCH NUMBER: SK-0148 REV 04 SHEET 1 OF 2
SKETCHED BY: BRYAN HARKINS BH 24 Jan 00
DATE: 01/24/00 Joe 1/24/00 SMB 1/24/00
FILE: /home/harkins/proe/drip.shield/sk-0148.rev04.drg

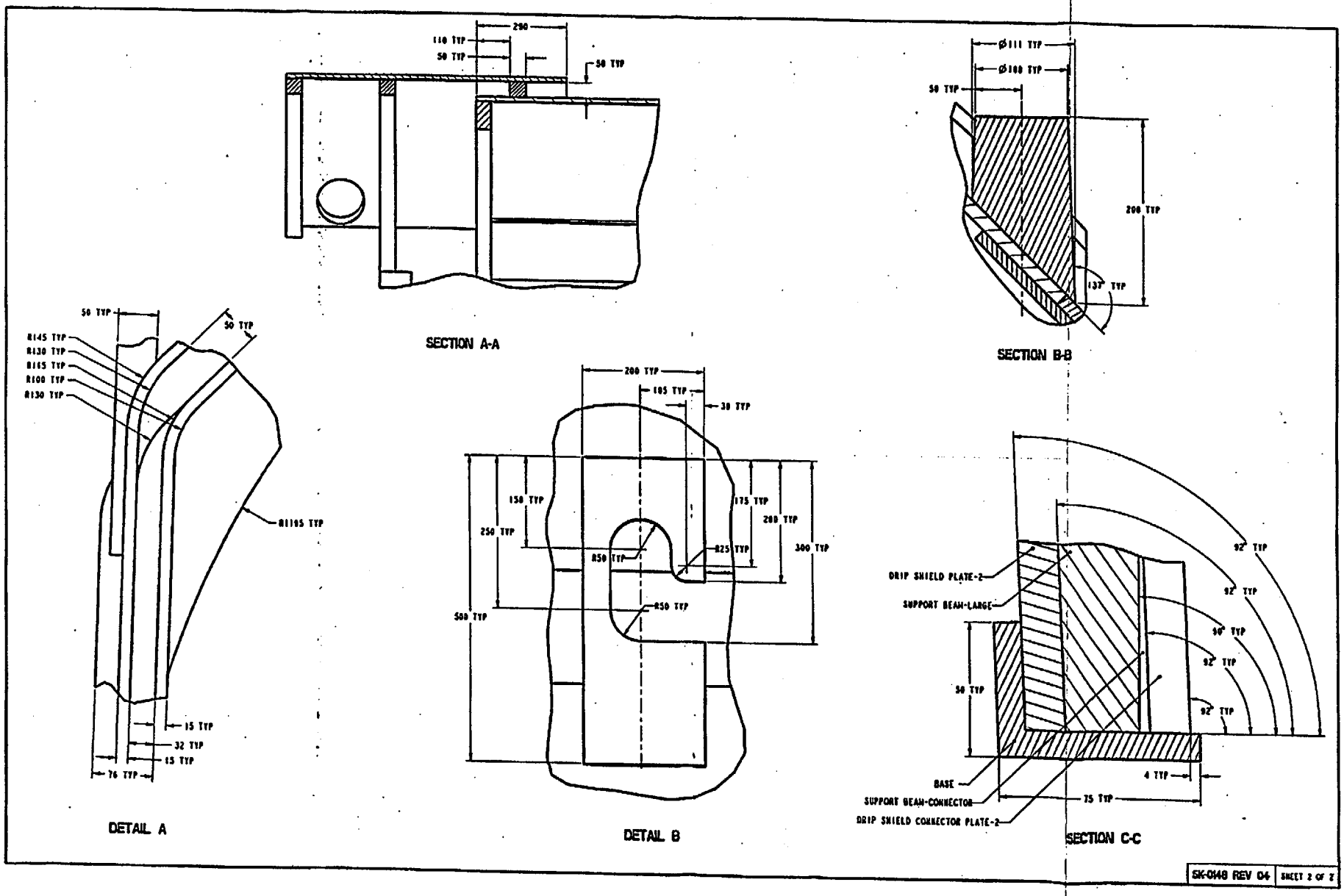
290
110 TYP
50 TYP
50 TYP
SECTION A-A
Ø111 TYP
Ø100 TYP
50 TYP
200 TYP
137° TYP
SECTION B-B
50 TYP
50 TYP
R145 TYP
R130 TYP
R115 TYP
R100 TYP
R130 TYP
R1105 TYP
15 TYP
32 TYP
15 TYP
76 TYP
DETAIL A
200 TYP
105 TYP
30 TYP
150 TYP
250 TYP
175 TYP
200 TYP
300 TYP
R50 TYP
R25 TYP
R50 TYP
500 TYP
DETAIL B
92° TYP
92° TYP
90° TYP
92° TYP
92° TYP
DRIP SHIELD PLATE-2
SUPPORT BEAM-LARGE
50 TYP
4 TYP
BASE
SUPPORT BEAM-CONNECTOR
DRIP SHIELD CONNECTOR PLATE-2
75 TYP
SECTION C-C
SK-0148 REV 04
SHEET 2 OF 2