DRAFT DISCLAIMER

This contractor document was prepared for the U.S. Department of Energy (DOE), but has not undergone programmatic, policy, or publication review, and is provided for information only. The document provides preliminary information that may change based on new information or analysis, and is not intended for publication or wide distribution; it is a lower level contractor document that may or may not directly contribute to a published DOE report. Although this document has undergone technical reviews at the contractor organization, it has not undergone a DOE policy review. Therefore, the views and opinions of authors expressed do not necessarily state or reflect those of the DOE. However, in the interest of the rapid transfer of information, we are providing this document for your information, per your request.

WM-11
NMSS09

OFFICE OF CIVILIAN RADIOACTIVE WASTE MANAGEMENT
ANALYSIS/MODEL COVER SHEET
Complete Only Applicable Items

1. QA: QA

2. ☒ Analysis — Check all that apply

Type of Analysis:
- ☒ Engineering
- ☐ Performance Assessment
- ☐ Scientific

Intended Use of Analysis:
- ☐ Input to Calculation
- ☐ Input to another Analysis or Model
- ☒ Input to Technical Document
- ☒ Input to other Technical Products

Describe use:

Used, in part, to describe the waste package design

Results in the Site Recommendation Report.

3. ☐ Model — Check all that apply

Type of Model:
- ☐ Conceptual Model
- ☐ Abstraction Model
- ☐ Mathematical Model
- ☐ System Model
- ☐ Process Model

Intended Use of Model:
- ☐ Input to Calculation
- ☐ Input to another Model or Analysis
- ☐ Input to Technical Document
- ☐ Input to other Technical Products

Describe use:

4. Title:

Design Analysis for UCF Waste Packages

5. Document Identifier (including Rev. No. and Change No., if applicable):

ANL-UDC-MD-000001 REV 00

6. Total Attachments:

4

7. Attachment Numbers - No. of Pages In Each:

I-2, II-2, III-1, IV-1

	Printed Name	Signature	Date
8. Originator	Michael J. Anderson Harold M. Wade	Harold M. Wade	05·18·00
9. Checker	Peter M. Noël	Peter M. Noël	5/18/00
10. Lead/Supervisor	Michael J. Anderson		5/18/00
11. Responsible Manager	Michael J. Anderson		5/18/00

12. Remarks:

OFFICE OF CIVILIAN RADIOACTIVE WASTE MANAGEMENT
ANALYSIS/MODEL REVISION RECORD

Complete Only Applicable Items

2. Analysis or Model Title:

Design Analysis for UCF Waste Packages

3. Document Identifier (Including Rev. No. and Change No., if applicable):

ANL-UDC-MD-000001 REV 00

4. Revision/Change No.	5. Description of Revision/Change
00	Initial Issuance

CONTENTS

Page

1. PURPOSE 11

2. QUALITY ASSURANCE 13

3. COMPUTER SOFTWARE AND MODEL USAGE 15

4. INPUTS 17
   - 4.1 DATA AND PARAMETERS 17
   - 4.2 CRITERIA 17
     - 4.2.1 System Description Document Requirements 17
     - 4.2.2 Interface Control Documents 22
     - 4.2.3 Other Requirements 22
   - 4.3 CODES AND STANDARDS 22

5. ASSUMPTIONS 23
   - 5.1 SOURCE TERM 23
     - 5.1.1 Use of a Single Pressurized Water Reactor Fuel Assembly Design 23
     - 5.1.2 Use of a Single Boiling Water Reactor Fuel Assembly Design 23
   - 5.2 STRUCTURAL 23
     - 5.2.1 21-PWR as Conservative for Pressurization Design-Basis Event 24
     - 5.2.2 Material Property Temperatures for 21-PWR Slap Down Evaluation 24
     - 5.2.3 Friction Coefficients 24
   - 5.3 THERMAL 24
     - 5.3.1 Stratigraphic Thermal Transport Properties 24
   - 5.4 SHIELDING 27
     - 5.4.1 Bounding CSNF Characteristics 27
     - 5.4.2 Value for Axial Peaking Factor 27
   - 5.5 CRITICALITY 27
     - 5.5.1 Selection of PWR Fuel Assembly 28
     - 5.5.2 Maximum Soluble Poison Concentration for PWR Fuel Assembly Depletion 28
     - 5.5.3 Upper Sub-critical Limit for Pre-closure Period 28
     - 5.5.4 Critical Limit for Post-closure Period 28
     - 5.5.5 Settled Oxide Depth 28
     - 5.5.6 Composition of Degraded Basket Corrosion Product Mixture 29

6. ANALYSIS/MODEL 31
   - 6.1 SUMMARY OF WASTE PACKAGE DESIGNS 31
   - 6.2 SATISFACTION OF SDD REQUIREMENTS 34
     - 6.2.1 System Performance Criteria 34
     - 6.2.2 Safety Criteria 42
     - 6.2.3 System Interfacing Criteria 48
     - 6.2.4 Codes and Standards Criteria 51
   - 6.3 SATISFACTION OF ICD REQUIREMENTS 52
     - 6.3.1 ICD with Surface Facilities Department 53

CONTENTS (Continued)

6.3.2 ICD with Subsurface Facilities Department 53
6.4 SATISFACTION OF OTHER CONSIDERATIONS 53
6.4.1 Tensile Stress Relaxation of Final Closure Weld by Induction Annealing 53
6.4.2 Tensile Stress Relaxation of Final Closure Weld by Laser Peening 54
6.4.3 Adequacy of Stress Reduction 54

7. CONCLUSIONS 55
7.1 SATISFACTION OF UCF SDD REQUIREMENTS 55
7.1.1 System Performance Criteria 55
7.1.2 Safety Criteria 57
7.1.3 System Environment Criteria 58
7.1.4 System Interfacing Criteria 58
7.1.5 Codes and Standards Criteria 59
7.2 SATISFACTION OF ICD REQUIREMENTS 59
7.3 SATISFACTION OF OTHER CONSIDERATIONS 59

8. INPUTS AND REFERENCES 61
8.1 DOCUMENTS CITED 61
8.2 CODES, STANDARDS, REGULATIONS, AND PROCEDURES 64

ATTACHMENTS 67

FIGURES

Page

1. Adjustments to Host Rock Thermal Transport Properties 25
2. 21-PWR Waste Package 32
3. 44-BWR Waste Package 33
4. Multi-scale Thermal Analysis Representation 37
5. Drift Segment Representation 38
6. Pre-closure Loading Curve for 0.929 Upper Sub-critical Limit 47
7. Post-closure Loading Curves 48
8. Trunnion Ring Installation 50

INTENTIONALLY LEFT BLANK

TABLES

Page

1. System Functions Indicated in UCF SDD 17
2. Summary of System Performance Criteria in UCF SDD 18
3. Summary of Safety Criteria in UCF SDD 19
4. Summary of System Environment Criteria in UCF SDD 20
5. Summary of System Interfacing Criteria in UCF SDD 21
6. Summary of Codes and Standards Criteria in UCF SDD 21
7. Stratigraphic Thermal Transport Data 26
8. Accommodation of Limiting PWR Fuel Assemblies 34
9. Accommodation of Limiting BWR Fuel Assemblies 35
10. Compliance of Radial Waste Package Shell Dimensions 35
11. List of Design Basis Events Important to Sizing Shell Thicknesses 36
12. Temperatures for 21-PWR Design Basis Waste Package 39
13. Peak Cladding Temperatures 39
14. Summary of Results of Horizontal Lifting of UCF Waste Packages 40
15. Summary of Results of Vertical Lifting of UCF Waste Packages 41
16. Summary of Results for Rock Fall Calculation 43
17. Summary of Results of Puncture Drop Calculation for 44-BWR Waste Package 43
18. Summary of Results of Slap-down Calculation for 21-PWR Waste Package 44
19. Range of Missile Characteristics 45
20. Missile Velocity (m/s) Required to Perforate Waste Package 45
21. Summary of Internal Pressurization Calculations 45
22. Applicability of 1995 ASME Boiler and Pressure Vessel Code 51
23. Interface Requirements between WPD and SFD 53
24. Summary of System Performance Criteria in UCF SDD 55
25. Summary of Safety Criteria in UCF SDD 57
26. Summary of System Environment Criteria in UCF SDD 58

TABLES (Continued)

27. Summary of System Interfacing Criteria in UCF SDD 58

28. Summary of Codes and Standards Criteria in UCF SDD 59

29. List of Attachments 67

ACRONYMS

ANS	American Nuclear Society
ANSI	American National Standards Institute, Inc.
ASME	American Society of Mechanical Engineers
ASTM	American Society for Testing and Materials
BWR	boiling water reactor
B&W	Babcock and Wilcox
CL	critical limit
CRWMS	Civilian Radioactive Waste Management System
CSNF	canistered spent nuclear fuel
DOE	U.S. Department of Energy
DHLW	defense high-level waste
EPRI	Electric Power Research Institute
ICD	Interface Control Document
IHML	initial heavy-metal loading
LA	License Application
LWR	light water reactor
MGR	Monitored Geologic Repository
MT	metric tons
mtU	metric tons of uranium
M&O	Management and Operating Contractor
N/A	not applicable
PAD	Performance Assessment Department
PWR	pressurized water reactor
SDD	System Description Document
SFD	Surface Facilities Department
SNF	spent nuclear fuel
SR	Site Recommendation
SSFD	Subsurface Facilities Department
TSPA	Total System Performance Assessment
UCF	uncanistered spent nuclear fuel
VA	Viability Assessment

ACRONYMS (Continued)

WPD	Waste Package Department
YMP	Yucca Mountain Project

1. PURPOSE

The purpose of this analysis is to summarize the analytical methods and processes used by the Waste Package Design Section of the Waste Package Department (WPD) to design uncanistered spent nuclear fuel (UCF) waste packages. In addition, this analysis will demonstrate how UCF waste packages will be designed to satisfy project requirements as embodied in the *Uncanistered Spent Nuclear Fuel Disposal Container System Description Document* (SDD), (CRWMS M&O 1999h), and interface requirements. The present analysis is consistent with Revision 0 of the SDD; however, it may or may not be consistent with future revisions, and applicability must be assessed on a case-by-case basis. The scope of this analysis is such that it illustrates the application of the design methodology, as documented in the *Waste Package Design Methodology Report* (CRWMS M&O 2000a), to the UCF waste package to meet specific requirements. The results of the calculations that are provided to support the UCF waste package designs are limited to those identified in the *Waste Package Design Sensitivity Report* (CRWMS M&O 2000b). This analysis is to be used, in part, to describe the waste package design results in the Site Recommendation Report. This analysis was performed in accordance with *Development Plan for Design Analyses for Uncanistered Commercial Fuel Waste Packages* (CRWMS M&O 2000o).

INTENTIONALLY LEFT BLANK

2. QUALITY ASSURANCE

The Quality Assurance program applies to this analysis. The UCF disposal container system was classified (in accordance with QAP-2-3, *Classification of Permanent Items*) as Quality Level-1 in *Classification of the MGR Uncanistered Spent Nuclear Fuel Disposal Container System* (CRWMS M&O 1999a, p. 7). The development of this analysis is conducted under activity evaluation *Waste Package Design Methodology and AMRs – 1101 2125 M1* (CRWMS M&O 1999b), which was prepared in accordance with QAP-2-0, *Conduct of Activities*. The results of that evaluation were that the activity is subject to the *Quality Assurance Requirements and Description* (DOE 2000) requirements. Following this activity evaluation, QAP-2-0 was superceded by AP-2.16Q, *Activity Evaluation*.

The control of this document is accomplished in accordance with AP-6.1Q, *Controlled Documents*, which provides for electronic source file verification. In process work is controlled through the checking process, which is governed by AP-3.10Q, *Analyses and Models*. The transmittal of the final product is conducted over the established YMP (Yucca Mountain Project) electronic infrastructure (e.g., e-mail, network servers). The fidelity of these systems is provided by other organizations and procedures. These controls meet the intent of AP-SV.1Q, *Control of the Electronic Management of Data*.

INTENTIONALLY LEFT BLANK

3. COMPUTER SOFTWARE AND MODEL USAGE

No computer software or models were used in the generation of this analysis.

INTENTIONALLY LEFT BLANK

4. INPUTS

4.1 DATA AND PARAMETERS

This design analysis provides a compilation of results from other technical documents. No calculations or numerical evaluations have been performed. Therefore, data or parameter sources have not been cited.

4.2 CRITERIA

The waste package must meet a number of system functions, which are listed in Table 1. These functions are from the UCF SDD (CRWMS M&O 1999h, Section 1).

Table 1. System Functions Indicated in UCF SDD

SDD Section	System Functions
1.1.1	The disposal container/waste package contains intact uncanistered and individually CSNF[a] within its boundary until it is breached.
1.1.2	The waste package restricts the transport of radionuclides to the outside of its boundary after it is breached.
1.1.3	The disposal container/waste package provides criticality control during and after it is loaded with waste.
1.1.4	The waste package accommodates the thermal loading strategy for the repository.
1.1.5	The disposal container/waste package provides identification of individual disposal containers and their contents.
1.1.6	The disposal container/waste package provides safety for personnel, equipment, and the environment.
1.1.7	The disposal container/waste package prevents adverse reactions involving the waste form.
1.1.8	The disposal container/waste package withstands loading, handling, sealing, transfer, emplacement, and retrieval loads.
1.1.9	The waste package withstands the emplacement drift environment for the time period of interest.
1.1.10	The disposal container/waste package provides conditions needed to maintain the physical and chemical stability of the waste form.
1.1.11	The waste package minimizes mobilization of radionuclides.
1.1.12	The waste package allows heat transfer between the waste form and the environment external to the waste package.
1.1.13	The disposal container/waste package accommodates handling, sealing, loading, emplacement, and retrieval operations.
1.1.14	The disposal container/waste package outer surface facilitates decontamination.

NOTE: [a] CSNF - canistered spent nuclear fuel

4.2.1 System Description Document Requirements

The UCF SDD (CRWMS M&O 1999h) provides a list of performance requirements for the UCF waste package that is consistent with upper tier requirement documents. These requirements are divided into five broad classes: System Performance Criteria, Safety Criteria, System Environment Criteria, System Interfacing Criteria, and Codes and Standards Criteria. In addition, the UCF SDD indicates two additional classes of requirements, Operational Criteria and Subsystem Design Criteria, which are omitted from this analysis because they are not presently addressed in the UCD SDD. These requirements are planned to be addressed in License Application (LA).

4.2.1.1 System Performance Criteria

The System Performance Criteria for the UCF SDD are summarized in Table 2. In this table, the column denoted as "SR/LA" indicates the time frame during which the compliance of the waste package to the criterion is planned to be demonstrated. For those denoted as "SR," the demonstration will occur during Site Recommendation (SR) activities. For those denoted as "LA," the first demonstration will not occur until LA activities are commenced. The decisions regarding the planning of compliance demonstrations were made in the *Waste Package Design Sensitivity Report* (CRWMS M&O 2000b)

Table 2. Summary of System Performance Criteria in UCF SDD

SDD Section	Summary of Requirements	SR/LA	Comments
1.2.1.1	Accommodation of Intact Fuel Assemblies	SR	
1.2.1.2	Accommodation of Sealed, Disposable, Single-element SNF[a] Canisters	LA	A three-dimensional square rectangular cavity with a cross-sectional width of 9.00 in. (22.9 cm) by 9.00 in. (22.9 cm) and a length of 201.1 in. (510.8 cm). The maximum canister weight has not yet been determined.
1.2.1.3	Limiting Total Effective Dose due to Combination of Waste Package, Emplacement Drift System and Natural Barrier	SR	The expected annual dose to the average member of the critical group shall not exceed 25 mrem total effective dose equivalent at any time during the first 10,000 years after permanent closure.
1.2.1.4	Thicknesses and Composition of both Shells Comprising the Waste Package	SR	The disposal container shall be composed of an inner shell of stainless steel (alloy 316) with a nominal thickness of 5 cm, and an outer shell that is alloy 22 material with a nominal thickness of 2 cm.
1.2.1.5	Waste Package Reliability at 10,000 Years	SR	
1.2.1.6	Peak-cladding Temperature for Zircaloy-clad Fuel	SR/LA	The temperature limits are <350 °C for normal conditions and <570 °C for short-term exposure to a fire. The second scenario will not be addressed until LA when the transporter is fully defined.
1.2.1.7	Prevention of Fuel Breach during Handling	LA	
1.2.1.8	Retrieval Contingency Period	SR	300 Years

Table 2 (Continued)

SDD Section	Summary of Requirements	SR/LA	Comments
1.2.1.9	Limitation on Oxidizers within Waste Package	LA	Shall not exceed 0.25 percent of internal volume.
1.2.1.10	External Surface Roughness Requirement	LA	Average of 250 µin (6.36 µm) or less
1.2.1.11	Inspectability of Closed Waste Package	SR	
1.2.1.12	Labeling Requirement	LA	
1.2.1.13	Benign Labeling	LA	
1.2.1.14	Legibility of Labeling	LA	
1.2.1.15	Provision for Accommodation of Filler	SR	
1.2.1.16	Capacity of Lifting Devices as Fraction of Yield Stress	SR	
1.2.1.17	Capacity of Lifting Devices as Fraction of Ultimate Tensile Strength	SR	
1.2.1.18	Avoidance of Breach for Transfer, Emplacement, and Retrieval	SR	
1.2.1.19	Use of Non-combustible and Heat-resistant Materials	SR	
1.2.1.20	No Explosive or Pyrophoric Materials	SR	
1.2.1.21	No Free Liquids within Waste Package	SR	

NOTE: [a] SNF - spent nuclear fuel

4.2.1.2 Safety Criteria

The Safety Criteria from the UCF SDD are summarized in Table 3.

Table 3. Summary of Safety Criteria in UCF SDD

SDD Section	Summary of Requirements	SR/LA	Comments
1.2.2.1.1	Pre-closure Rock Fall without Breach	SR	Assuming a 13 MT[a] (28,665 lb_m) rock (spherical geometry assumed) that falls 3.1 m (10.2 ft) onto the side of the waste package without breaching.
1.2.2.1.2	Pre-closure Impact on End of Waste Package without Breach	SR	Assuming a 2.3 MT (5,100 lb_m) spherical object that falls 2 m (6.6 ft) onto the end of the waste package without breaching.
1.2.2.1.3	Pre-closure Vertical Drop of Waste Package without Breaching	SR	Assuming a drop from a height of 2 m (6.6 ft) onto a flat, unyielding surface without breaching.
1.2.2.1.4	Pre-closure Horizontal Drop of Waste Package without Breaching	SR	Assuming a drop from a height of 2.4 m (7.9 ft) onto a flat, unyielding surface without breaching.

Table 3 (Continued)

SDD Section	Summary of Requirements	SR/LA	Comments
1.2.2.1.5	Pre-closure Horizontal Drop of Waste Package without Puncture	SR	Assuming a drop of 1.9 m (6.2 ft) onto a steel support in an emplacement drift, or a drop of 2.4 m (7.9 ft) onto a concrete pier, without breaching by puncture.
1.2.2.1.6	Pre-closure Slap Down with Breaching	SR	
1.2.2.1.7	Sustain Design Basis Earthquake	SR	
1.2.2.1.8	Sustain Pre-closure Missile Impact without Breaching	SR	Assuming a 0.5 kg (1.1 lb_m) missile (modeled as a 1 cm diameter, 5 cm long valve stem) travelling at 5.7 m per second (18.7 ft/sec) without breaching.
1.2.2.1.9	Sustain Pre-closure Design Basis Transporter Accident	LA	
1.2.2.1.10	Pre-closure Internal Pressure Limit	SR	Maximum pressure of 1.01 MPa (146 psia).
1.2.2.1.11	Sustain Fire	LA	
1.2.2.1.12	Avoidance of Pre-closure Criticality and Margin Requirement	SR	
1.2.2.1.13	Maximum Increase in Radionuclide Inventory during Post-closure Period due to Criticality Event	SR	

NOTE: * MT - metric tons

4.2.1.3 System Environment Criteria

The System Environment Criteria from the UCF SDD are summarized in Table 4.

Table 4. Summary of System Environment Criteria in UCF SDD

SDD Section	Summary of Requirements	SR/LA	Comments
1.2.3.1	The waste package shall meet all performance requirements during and after exposure to the emplacement drift environments.	LA	

4.2.1.4 System Interfacing Criteria

The System Interfacing Criteria from the UCF SDD are summarized in Table 5.

Table 5. Summary of System Interfacing Criteria in UCF SDD

SDD Section	Summary of Requirements	SR/LA	Comments
1.2.4.1	Meet Requirements Contained in ICD[a] with Surface Repository Facilities and Systems	LA	
1.2.4.2	Meet Requirements Contained in ICD with Subsurface Repository Facilities and Systems	LA	
1.2.4.3	Limitation on Surface Radiation Dose Rate	SR	
1.2.4.4	Maximum Heat-generation Rate	SR	
1.2.4.5	Limitation on the Inventory of CSNF that must be Disposed	SR	
1.2.4.6	Vertical Loading of Disposal Container with Waste Forms	SR	
1.2.4.7	Requirement to Provide for both Vertical and Horizontal Handling	SR	
1.2.4.8	Welding Times	LA	

NOTE: [a] ICD - Interface Control Document

4.2.1.5 Codes and Standards Criteria

The Codes and Standards Criteria from the UCF SDD are summarized in Table 6.

Table 6. Summary of Codes and Standards Criteria in UCF SDD

SDD Section	Summary of Requirements	SR/LA	Comments
1.2.6.1	1995 ASME[a] Boiler and Pressure Vessel Code (Section III, Division 1, Subsection NG–1995)	SR	
1.2.6.2	1995 ASME Boiler and Pressure Vessel Code (Section III, Division 1, Subsection NB–1995)	SR	
1.2.6.3	Nuclear Criticality Control of Special Actinide Elements (ANSI/ANS-8.15-1981)	SR	
1.2.6.4	Nuclear Criticality Safety in Operations with Fissionable Materials Outside Reactors (ANSI/ANS-8.1-1983)	SR	
1.2.6.5	Criteria for Nuclear Safety Controls in Operations with Shielding and Confinement (ANSI/ANS-8.10-1983)	SR	
1.2.6.6	Criticality Safety Criteria for the Handling, Storage, and Transportation of LWR[b] Fuel Outside Reactors (ANSI/ANS-8.17-1984)	SR	

NOTES: [a] ASME - American Society of Mechanical Engineers
[b] LWR - light water reactor

4.2.2 Interface Control Documents

There are currently two ICDs between WPD and other organizations. These are with:

- Surface Facilities Department (SFD), *Interface Control Document for the Waste Packages/Disposal Containers and the Surface Repository Facilities and Systems for Mechanical, Envelope and Functional Interfaces between Surface Facilities Operations and Waste Package Operations* (CRWMS M&O 1998b)

- Subsurface Facilities Department (SSFD), *Interface Control Document for Waste Packages and the Mined Geologic Disposal System Repository Subsurface Facilities and Systems for Mechanical and Envelope Interfaces between Engineered Barrier System Operations and Waste Package Operations* (CRWMS M&O 1998c)

Note that the SSFD was formerly named Engineered Barrier System Operations.

4.2.3 Other Requirements

An important consideration in the long-term integrity of the waste package is resistance to corrosion. With the exception of the final closure welds, the manufacturer will anneal all of the welds used to fabricate the waste package. The annealing process will ensure a well-characterized metal microstructure that supports evaluations of corrosion rates by testing. For the final closure welds, solution annealing is not possible due to the presence of the waste form. To improve the microstructure of the final closure weld regions, stress reduction techniques must be employed to reduce the residual stress to less than 20 percent of the yield stress for the material to mitigate stress corrosion cracking (CRWMS M&O 2000j, Item 1).

4.3 CODES AND STANDARDS

The codes and standards applicable to the design of UCF waste packages have been identified in *Uncanistered Spent Nuclear Fuel Disposal Container System Description Document* (CRWMS M&O 1999h, Section 1.2.6). The applicable codes and standards are enumerated and discussed in Section 6.2.4.

5. ASSUMPTIONS

5.1 SOURCE TERM

The process and methodological assumptions used in the formulation of the thermal and shielding source terms for the calculations referenced in this analysis are those described in the *Waste Package Design Methodology Report* (CRWMS M&O 2000a, Section 5.1). Specific assumptions follow.

5.1.1 Use of a Single Pressurized Water Reactor Fuel Assembly Design

It is assumed that the various pressurized water reactor (PWR) fuel assembly types can be approximated by a single assembly design and that the resulting source terms are negligibly affected by the use of a common geometry. Adjusting the fuel length accommodates different initial heavy-metal loadings (IHMLs). The fuel assembly design used in the generation of the source terms is the Babcock and Wilcox (B&W) Mark B fuel assembly. The rationale for this assumption is that it has been shown in *PWR Assembly Source Terms for Waste Package Design* (CRWMS M&O 1997c) that source terms are sensitive to IHML and burnup, but should be relatively insensitive to variations in fuel transverse geometry. This assumption is used to generate the results that are inputs to the Total System Performance Assessment report for Site Recommendation (TSPA-SR). This assumption for the thermal source term is used in demonstrating compliance with the peak-cladding temperature limit as shown in Section 6.2.1.5. Also, it is used to define the source term for limitations on surface radiation dose as shown in Section 6.2.3.1.

5.1.2 Use of a Single Boiling Water Reactor Fuel Assembly Design

It is assumed that the various boiling water reactor (BWR) fuel assembly types can be approximated by a single assembly design and that the resulting source terms are negligibly affected by the use of a common geometry. The fuel assembly design used in the generation of the source terms is the General Electric BWR/2,3 8x8 fuel assembly. This fuel design has a high IHML, but future assessments must be made for other fuel designs. The rationale for this assumption is that, as in the case for PWR fuel, the BWR source terms should be sensitive to IHML and burnup, but relatively insensitive to variations in fuel assembly transverse geometry. This assumption for the thermal source term is used in demonstrating compliance with the peak-cladding temperature limit as shown in Section 6.2.1.5. Also, it is used to define the source term for limitations on surface radiation dose as shown in Section 6.2.3.1.

5.2 STRUCTURAL

The process and methodological assumptions used in the structural calculations referenced in this analysis are those described in the *Waste Package Design Methodology Report* (CRWMS M&O 2000a, Section 5.2). Specific assumptions follow.

5.2.1 21-PWR as Conservative for Pressurization Design-Basis Event

The internal pressure for the 21-PWR waste package is conservatively assumed for the 44-BWR waste package. The rational for this conservative assumption is that the pressure inside a 44-BWR waste package is less than the pressure inside the 21-PWR waste package (CRWMS M&O 1997a). This assumption is used to generate the results shown in Sections 6.2.1.3 and 6.2.2.8.

5.2.2 Material Property Temperatures for 21-PWR Slap Down Evaluation

Some of the temperature-dependent material properties were not available for the waste package materials. Therefore, properties at room temperature (20 °C) were assumed in the absence of more appropriate data. Otherwise, the material properties evaluated at 93 °C (200 °F) are used when available. The rationale for this assumption is that the average waste package surface temperature is about 125 °C several days after loading with SNF in the assembly transfer system (CRWMS M&O 1998f, Section 6, Table 6-2). In addition, the mechanical properties of subject materials do not change significantly at the temperatures the waste package experiences during the handling operation. This assumption is used to generate the results shown in Sections 6.2.1.3 and 6.2.2.5.

5.2.3 Friction Coefficients

The coefficients of static and dynamic friction for steel on steel are used, instead of those for rock on nickel alloy or nickel alloy on rock, which are not found in available literature. The rationale for this assumption is that the friction coefficients do not have significant effect on the results, since there is no significant relative displacement between the rock and the waste package shell or between the waste package and the impact surface along the surface perpendicular to the line of impact. However, the following numbers are specified in order to meet the computational requirements:

Coefficient of static friction = 0.6 (Meriam and Kraige 1987)

Coefficient of kinetic friction = 0.4 (Meriam and Kraige 1987)

This assumption is used to generate the results shown in Sections 6.2.1.3, 6.2.2.1, and 6.2.2.5.

5.3 THERMAL

The process and methodological assumptions used in the thermal calculations referenced in this analysis are those described in the *Waste Package Design Methodology Report* (CRWMS M&O 2000a, Section 5.3). The specific assumption follows.

5.3.1 Stratigraphic Thermal Transport Properties

The stratigraphy of the major geologic units near the center of the repository and the corresponding thermal transport properties of the rock comprising those strata were provided by the Applied Research and Testing Department (formerly the Natural Environment Program Operations), and are sufficient for performing thermal analyses of UCF waste packages. The rationale for this assumption is that it is conservative since it neglects thermal energy transport

away from the drifts by the gross movement of water in the rock mass. It is also important to note that while gross water movement within the host rock fracture network is not represented, the thermal transport constants used in the evaluations are implicitly included. For instance, even though rock strata specific heats are represented as constant values for temperatures below boiling, they are higher than any of the constituents, and hence, include the effect of the presence of water. Near the boiling temperature (T) in the host rock, the specific heat (c_p) is adjusted upward to account for the latent heat of vaporization of the water in the host rock (see Figure 1). The thermal conductivity (k) is also reduced above the boiling temperature to represent the loss of liquid water. The values used in the present evaluation are shown in Table 7 (CRWMS M&O 2000k). This assumption is used in Section 6.2.1.5.

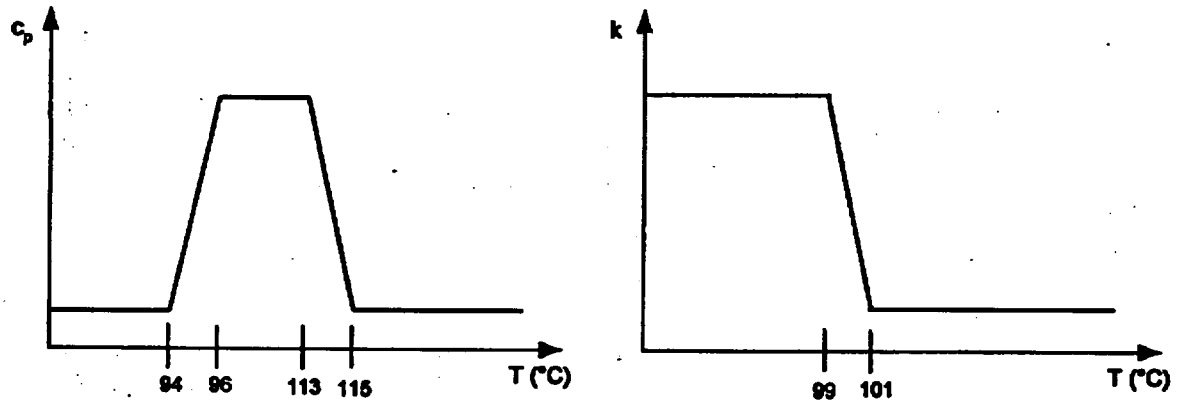

Figure 1. Adjustments to Host Rock Thermal Transport Properties

Table 7. Stratigraphic Thermal Transport Data

T/M[b] Unit	USGS[c] Unit		ISM[d] 3.0[a]	Thickness[a] (m)	Grain Density (kg/m³)	Thermal Conductivity[a] T≤100 °C (W/m·K)	Thermal Conductivity[a] T>100 °C (W/m·K)	Specific Heat[a] T≤ 95 °C (J/kg·K)	Specific Heat[a] 95 °C<T ≤114 °C (J/kg·K)	Specific Heat[a] T> 114 °C (J/kg·K)
TCw	Tpcrv		ND	ND	2550	2.00	1.60	823	3879	823
	Tpcm		ND	ND	2550	2.00	1.60	823	3879	823
	Tpcrl		ND	ND	ND	ND	ND	ND	ND	ND
	Tpcpul		ND	ND	2520	1.67	1.23	882	4352	882
	Tpcpmn		ND	ND	2510	1.94	1.53	837	4010	837
	Tpcpll		ND	ND	2510	1.76	1.02	847	4019	847
	Tpcpln		ND	ND	2510	1.88	1.28	837	4010	837
	Tpcplnc		ND	ND	ND	ND	ND	ND	ND	ND
	Tpcpv	3	Tcpv3	0.0	2470	0.98	0.54	857	4570	857
PTn		2	Tcpv2	5.49						
	Tpcpv1		Tcpv1	4.69	2380	1.07	0.50	1037	6048	1037
	Tpbt4		Tcbt4	0.53	2340	0.50	0.35	1077	21976	1077
	Tpy		Yucca	7.05	2400	0.97	0.44	849	16172	849
	Tpbt3		Tpbt3_dc	4.58	2370	1.02	0.46	1016	20669	1016
	Tpp		Pah	14.09	2260	0.82	0.35	1330	25560	1330
	Tpbt2		Tpbt2	9.69	2370	0.67	0.23	1224	23878	1224
	Tptrv3		Tptrv3	4.58	2510	1.00	0.37	834	5137	834
	Tptrv2		Tptrv2	0.53						
TSw1	Tptrv1		Tptrv1	1.06						
	Tptrn		Tptrn	46.85	2550	1.62	1.06	866	5629	866
	Tptrl		Tptrl	8.98	2510	1.58	0.89	882	5693	882
	Tptpul		Tptpul	77.68	2510	1.80	0.71	883	5694	883
TSw2	Tptpmn		Tptpmn	29.94	2530	2.33	1.56	948	4568	948
	Tptpll		Tptpll	106.21	2540	2.02	1.20	900	4663	900
	Tptpln		Tptpln	47.73	2560	1.84	1.42	865	4523	865
TSw3	Tptpv3		Tptpv3	20.61	2360	2.08	1.69	984	1958	984
CHn1	Tptpv2		Tptpv2	2.99						
	Tptpv1		Tptpv1	11.27						
	Tpbt1		Tpbt1	3.35	2310	1.31	0.7	1057	21076	1057
	Tac 5	Tac(v)	Calico	84.37	2240	1.17	0.58	1201	23863	1201
	Tac 4									
	Tac 3									
	Tac 2	Tac(z)			2350	1.2	0.61	1154	22086	1154
	Tac 1									
CHn2	Tacbt				2440	1.35	0.73	1174	13561	1174

NOTES: [a] ND - no data is available
[b] T/M - Thermal-mechanical
[c] USGS - U.S. Geological Survey
[d] ISM - Integrated Site Model

5.4 SHIELDING

The process and methodological assumptions used in the shielding calculations referenced in this analysis are those described in the *Waste Package Design Methodology Report* (CRWMS M&O 2000a, Section 5.4). Specific assumptions follow.

5.4.1 Bounding CSNF Characteristics

The characteristics of radiation source terms used in dose rate calculation are hypothetical. These source terms are used to evaluate an upper limit for the surface dose rate because they generate conservative (higher) surface dose rates due to the active fuel region as well as the hardware regions of the fuel assembly. Note that the hardware regions of the fuel assembly include portions of the assembly above and below the region containing fissile material (including, but not limited to, bottom nozzles and tie plates). The source terms for PWR and BWR SNF have the following characteristics: 5.5 wt% initial ^{235}U, 75.0 GWd/metric tons of uranium (mtU) burnup, and 5-year decay time for the active fuel region, and 0.711 wt% initial ^{235}U, 75.0 GWd/mtU burnup, and 5-year decay time for the hardware regions of the assembly. The rationale for this assumption is the estimation of the PWR SNF source term in *PWR Source Term Generation and Evaluation* (CRWMS M&O 1999f, Section 6). Similarly, the BWR SNF source term is estimated in *BWR Source Term Generation and Evaluation* (CRWMS M&O 1999g, Section 6). Both evaluations are based on the selection of maximum enrichments, burnups, and early decay times from the SR waste streams (CRWMS M&O 1999j). This assumption is used to generate the results shown in Section 6.2.3.1.

5.4.2 Value for Axial Peaking Factor

Since the radiation source terms are generated with the assumption that the burnup is uniformly distributed within a SNF assembly, an axial peaking factor is used for neutron and photon source strengths in the active fuel region. The rationale for this assumption is to conservatively account for the maximum values for the actual axial source distributions. The axial peaking factor for a PWR SNF assembly is 1.25. This value is based on the predicted axial decay heat rate profile for a PWR SNF assembly provided in *Testing and Analyses of the TN-24P PWR Spent-Fuel Dry Storage Cask Loaded with Consolidated Fuel* (EPRI 1989, p. 3-26). The axial peaking factor for a BWR SNF assembly is 1.4. This peaking factor has been determined from the axial burnup profile for a BWR SNF assembly at lower burnup values (CRWMS M&O 1999g, p. 47). The rationale for using this value is that an axial peaking factor at a lower burnup conservatively bounds the axial profile of a radiation source generated at higher burnup (as shown in CRWMS M&O 1999g, pp. 47-48). This assumption is used to generate the results shown in Section 6.2.3.1.

5.5 CRITICALITY

The process and methodological assumptions used in the criticality calculations referenced in this analysis are those described in the *Waste Package Design Methodology Report* (CRWMS M&O 2000a, Section 5.5). Specific assumptions follow.

5.5.1 Selection of PWR Fuel Assembly

It was assumed that the B&W 15x15 MK-B2 assembly design is the most limiting PWR fuel assembly design. The rationale for this assumption is that a previous analysis for the BR-100 transportation cask established the B&W 15x15 fuel assembly as one of the most reactive fuel assembly designs (B&W 1991, p. II 6-6). The B&W 15x15 MK-B2 design contains the greatest mass of fissile material per assembly (CRWMS M&O 1998d, p. 26) and is therefore the most reactive of the B&W 15x15 fuel assembly designs. This assumption is used to generate the results shown in Section 6.2.2.9.

5.5.2 Maximum Soluble Poison Concentration for PWR Fuel Assembly Depletion

The soluble poison concentration used for PWR fuel depletion was 946 ppm, which was the highest cycle average used in Crystal River Unit 3 (CRWMS M&O 1998d). The use of the Crystal River Unit 3 value is rationalized on the fact that this is a B&W designed reactor with B&W fuel assemblies loaded (see Section 5.5.1). This assumption is used to generate the results shown in Sections 6.2.2.9 and 6.2.2.10.

5.5.3 Upper Sub-critical Limit for Pre-closure Period

An upper sub-critical limit of 0.929 was used for the pre-closure time period. The rationale for this assumption is that this is the value used in the *Disposal Criticality Analysis Methodology Topical Report* (YMP 1998, p. 4-26). Calculated from the lower bound of the CL range (0.988 to 0.979), this value provides 5 percent in addition to 2.1 percent for bias and uncertainty in the method of calculation. This assumption is used to generate the results shown in Section 6.2.2.9.

5.5.4 Critical Limit for Post-closure Period

A critical limit (CL) ranging from 0.988 to 0.979 over the burnup range from 0.0 to 33.1 GWd/mtU was used for the post-closure time period. The rationale for this assumption is that it is the value recommended in the *Disposal Criticality Analysis Methodology Topical Report* (YMP 1998, p. 4-26). This assumption is used to generate the results shown in Section 6.2.2.10.

5.5.5 Settled Oxide Depth

It is assumed that a 58 volume percentage (vol%) settled iron oxide configuration, with intact fuel assembly arrays, is the most limiting fully degraded configuration. The rationale for this assumption is that *Criticality Evaluation of Degraded Internal Configurations for the PWR AUCF WP Design* (CRWMS M&O 1997b, p. 48) evaluated various configurations and identified the 58 vol% settled oxide configuration as the bounding case for the fully degraded basket configuration of the Viability Assessment (VA) waste package design. The basket materials of the VA design are sufficiently similar to those in the SR design for use in establishing this rationale. This assumption is used to generate the results shown in Section 6.2.2.10.

5.5.6 Composition of Degraded Basket Corrosion Product Mixture

It is assumed that the degraded basket corrosion product mixture is similar to that listed in *Supplemental Criticality Evaluations for Degraded Internal Configurations of a 21 PWR WP* (CRWMS M&O 1998e, p. 14). The rationale for this assumption is that the basket materials for the current waste package design in this evaluation and the one from this reference are sufficiently similar. This assumption is used to generate the results shown in Section 6.2.2.10.

INTENTIONALLY LEFT BLANK

6. ANALYSIS/MODEL

The UCF waste packages are those waste packages that are designed to accept PWR and BWR fuel assemblies, and canisters containing parts or fragments of these fuel assemblies. The following waste packages are included in this group:

- 21-PWR Absorber Plate Waste Package
- 21-PWR Control Rod Waste Package
- 12-PWR Long Absorber Plate Waste Package
- 44-BWR Absorber Plate Waste Package
- 24-BWR Thick-Absorber Plate Waste Package

For SR, partial design details will be developed only for the 21-PWR Absorber Plate waste package and the 44-BWR Absorber Plate waste package. More complete design information are planned to be provided for all waste packages as a part of the licensing process.

The design for the 21-PWR Absorber Plate waste package is shown in the sketch located in Attachment I and illustrated in Figure 2. The design for the 44-BWR Absorber Plate waste package is shown in the sketch located in Attachment II and illustrated in Figure 3 (note that both isometrics do not correspond exactly to the sketches shown in Attachments I and II; however, they are shown here to illustrate the major features). For SR, these are the only two waste package designs for which the application of the design methodology and processes will be demonstrated.

This section contains no discussion of alternate methods, as there are no alternate methods that are considered applicable. This analysis does not provide estimates of any of the factors for the Post-closure Safety Case or Potentially Disruptive Events, and is, therefore, assigned Level 3 importance.

6.1 SUMMARY OF WASTE PACKAGE DESIGNS

Both the 21-PWR Absorber Plate and 44-BWR Absorber Plate waste packages are essentially right-circular cylinders. They are comprised of two shells, an inner shell of stainless steel (SS 316NG [SA-240 S31600]) that provides structural support and an outer shell of high-nickel alloy (alloy 22 [SB-575 N06022]) that provides a corrosion-resistant barrier. The inner structural shell is inserted inside the outer corrosion-resistant shell to form a loosely fitting structure. There are two lower lids that are welded to the shells at the time of fabrication. There are three upper lids that are welded in place after the disposal containers are loaded with the appropriate waste forms.

The CSNF assemblies are loaded into baskets that form a regular array of square apertures. The baskets are formed from interlocking sheets of structural steel (A516 Grade 70 [SA-516 K02700]) and neutron-absorbing material for criticality control (Neutronit A 978). Aluminum (Al 6061 T4 [SB-209 A96061]) sheets are also added to create thermal shunts to enhance heat transfer to the shells of the waste package. For other varieties of UCF waste packages, specially manufactured control rods finger assemblies may be used for criticality control and the neutron-absorbing material (i.e., Neutronit) omitted. In addition, waste packages designed for high-reactivity fuel omit the thermal shunts since such spent fuel has low thermal output. This interlocking system of sheets is held in place by stiffener sheets inserted perpendicular to the structural steel sheets.

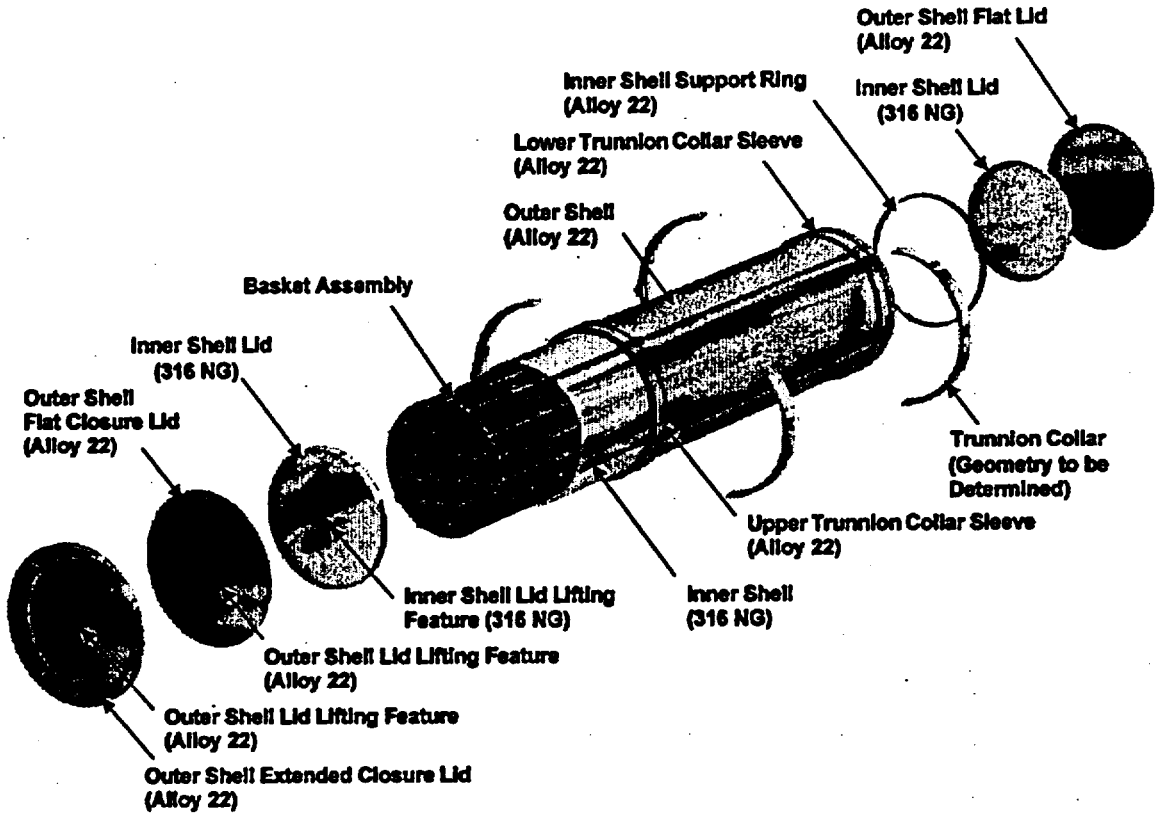

Figure 2. 21-PWR Waste Package

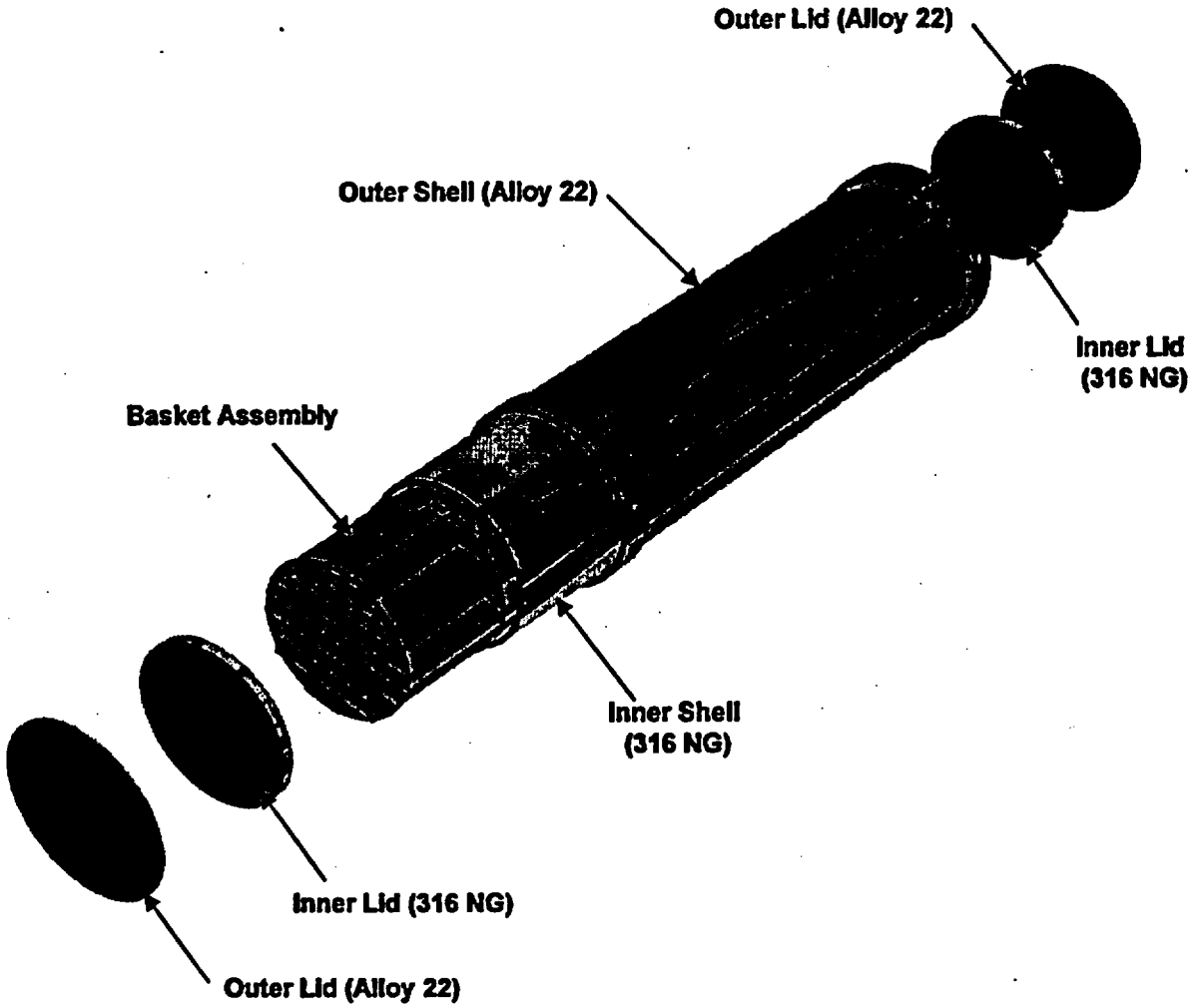

Figure 3. 44-BWR Waste Package

6.2 SATISFACTION OF SDD REQUIREMENTS

This section contains the demonstration that a waste package design can be created that will satisfy the UCF SDD requirements (see Section 4.2.1). This demonstration addresses SDD requirements that are necessary for SR. Other SDD requirements are planned to be addressed as a part of the licensing process, which occurs after SR. This document, where appropriate, is planned to be revised for LA to include design information to demonstrate compliance with the SDD requirements.

In some cases, detailed design information is not appropriate for SR because it relies on details of the design of other components that will not be formulated for SR (e.g., transporter design for pre-closure fire calculation). In other cases, the SDD requirement relies on the details of processes that will not be defined for SR (e.g., closure welding process). Finally, there are some analyses for which the UCF waste packages are less representative or less limiting than those for another waste package design (e.g., the waste package drop calculation, where the Naval Canistered Waste Package is more appropriate).

This section addresses SDD requirements that are identified as appropriate for evaluation for SR, as shown in Tables 2, 3, 5 and 6. For each of these, the SDD paragraph number is included in the sub-section title.

6.2.1 System Performance Criteria

6.2.1.1 Accommodation of Intact Fuel Assemblies (1.2.1.1)

There are a number of fuel assembly types that the waste package must accommodate. These are given in the SDD. The envelope requirements for the limiting PWR fuel assembly designs and the corresponding available volume within the waste package basket voids are shown in Table 8.

Note that this design accommodates the Big Rock Point BWR fuel assemblies, which are sufficiently large to require disposal in a PWR waste package. Further note that the 21-PWR package does not accommodate fuel assemblies from the South Texas plant. These longer fuel assemblies will be contained in longer PWR waste packages, specially designed for this fuel type. For the PWR fuel assemblies identified as CE 16x16 and CE System 80, the end fittings (the NFC, or non-fuel components, as identified in the SDD) must be removed prior to insertion into the waste package. The requirement of a maximum fuel assembly weight of 1,680 lb (762.0 kg) is met by assuming at least this weight for all analyses for which this variable is important.

Table 8. Accommodation of Limiting PWR Fuel Assemblies

Limiting Assembly Dimensions[a]		Basket Void Dimensions[b]	
Length (in/cm)	Width (in/cm)	Length (cm)	Width (cm)
180 / 457.2	8.54 / 21.7	458.5	22.64

NOTES: [a] These are irradiated dimensions.
[b] These dimensions are from Attachment I and include the free volume beyond the open end of the basket.

The envelope requirements for the limiting BWR fuel assembly designs and the corresponding available volume within the waste package basket voids are shown in Table 9. Note that the

larger, channeled fuel assembly dimensions are used in this demonstration. (As noted above, the Big Rock Point BWR fuel assemblies will not be inserted in this waste package for disposal.) The requirement of a maximum fuel assembly weight of 699 lb (317.1 kg) is met by assuming at least this weight for all analyses for which this variable is important.

Table 9. Accommodation of Limiting BWR Fuel Assemblies

Limiting Assembly Dimensions[a]		Basket Void Dimensions[b]	
Length (in/cm)	Width (in/cm)[c]	Length (cm)	Width (cm)
177.8 / 451.6	5.91 / 15.0	458.5	15.53

NOTES: [a] These are irradiated dimensions.
[b] These dimensions are from Attachment II and include the free volume beyond the open end of the basket.
[c] These dimensions include the channels.

6.2.1.2 Limiting Total Effective Dose (1.2.1.3)

The waste package designs developed in this analysis are provided to the Performance Assessment Department (PAD) in accordance with the ICD between the WPD and the PAD (CRWMS M&O 1998a). Compliance with this requirement is demonstrated in the TSPA-SR. Since the TSPA-SR will not be completed before the initial issuance of this analysis, satisfaction of this requirement cannot be demonstrated. The source term calculations for UCF and CSNF provide input values for the TSPA-SR.

6.2.1.3 Thickness and Composition of Shells (1.2.1.4)

The SDD requires that the inner shell comprising the waste package be constructed of stainless steel 316. The material call-out shown on the second sheet of Attachment I requires the use of SA-240 S31600, which is the ASME equivalent to American Society of Testing Materials (ASTM) SS-316. The SDD requires that the outer shell be constructed of alloy 22. The material call-out show on the second sheet of Attachment I requires the use of SB-575 N06022, which is the ASME equivalent of ASTM Alloy 22.

Compliance with shell radial dimension requirements is shown in Table 10.

Table 10. Compliance of Radial Waste Package Shell Dimensions

SDD Requirements		Shell Radial Dimensions	
Inner Shell	Outer Shell	Inner Shell	Outer Shell
5 cm (Nominal)	2 cm (Nominal)	21-PWR Absorber Plate Waste Package[a]	
		5 cm	2 cm
		44-BWR Absorber Plate Waste Package[b]	
		5 cm	2 cm

NOTES: [a] These dimensions are from Attachment I.
[b] These dimensions are from Attachment II.

The required thicknesses of the waste package shells are dictated by a number of considerations including both long-term performance as embodied in the Total Effective Dose (see Section

6.2.1.2) and reliability (see Section 6.2.1.4), demonstrated by the survival against mechanical challenges to the waste packages. The latter analyses are enumerated in Table 11.

Table 11. List of Design Basis Events Important to Sizing Shell Thicknesses

Design Basis Event	Discussion for 21-PWR Waste Package
Avoidance of Breach for Transfer, Emplacement and Retrieval	6.2.1.11
Pre-closure Rock Fall without Breach	6.2.2.1
Pre-closure Impact on End of Waste Package without Breach	N/A[a]
Pre-closure Vertical Drop without Breaching	6.2.2.2
Pre-closure Horizontal Drop without Breaching	6.2.2.3
Pre-closure Horizontal Drop without Puncture	6.2.2.4
Pre-closure Slap Down without Breaching	6.2.2.5
Sustain Design Basis Earthquake	6.2.2.6
Sustain Pre-closure Missile Impact without Breaching	6.2.2.7
Sustain Pre-closure Design Basis Transporter Accident	N/A
Pre-closure Internal Pressure Limit	6.2.2.8
Sustain Fire	N/A

NOTE: [a] N/A - not applicable

6.2.1.4 Waste Package Reliability for 10,000 Years (1.2.1.5)

The waste package designs developed in this analysis are provided to the PAD in accordance with the ICD between the WPD and the PAD (CRWMS M&O 1998a). Compliance with this requirement is demonstrated in the TSPA-SR. Since that report will not be completed before the initial issuance of this document, satisfaction of this requirement cannot be demonstrated.

6.2.1.5 Peak-Cladding Temperature for Zircaloy-Clad Fuel (1.2.1.6)

The current repository thermal design strategy (Stroupe 2000) allows a maximum waste package linear thermal output of 1.45 kW/m and a waste package skirt-to-skirt spacing of 0.1 m. The basic design does not incorporate backfill, but retains the option to install backfill prior to closure. It must be possible to close the repository 26 years after the emplacement of the final waste package. The repository is ventilated and the net ventilation efficiency is 70% (CRWMS M&O 1999i, Paragraph 12). Thermal calculations for configurations that reasonably span the expected range of repository designs are available, including this specific design strategy.

Drift scale thermal calculations utilize a multi-scale representation of the repository, as shown in Figure 4. This representation approximates the repository as an infinitely repeating series of "pillars," extending from the top of the mountain to a plane well into the saturated zone. Layers corresponding to the stratigraphy of the mountain represent the host rock of the repository. For each of these layers, thermal transport properties (viz., temperature-dependent thermal conductivity and specific heat) appropriate to the local rock properties are used. Laterally, adiabatic surfaces are placed at the center of the rock masses between the drifts. The variability of the waste package heat-generation rates is incorporated by representing three waste packages within the drift segment of the pillar, as shown in Figure 5. The time-dependent heat generation

rates of the waste packages are adjusted to ensure that the average heat generation rate of the drift segment is the same as that for the entire repository. The 21-PWR waste package bisected by the adiabatic surface assumes a design-basis heat generation rate of 11.8 kW, as required by Paragraph 1.2.4.4 of the SDD. A second waste package is an average 44-BWR waste package, while a 5-DHLW (defense high-level waste) waste package serves as a fulcrum, with a heat generation rate that ensures the segment average is the same as that for the entire repository.

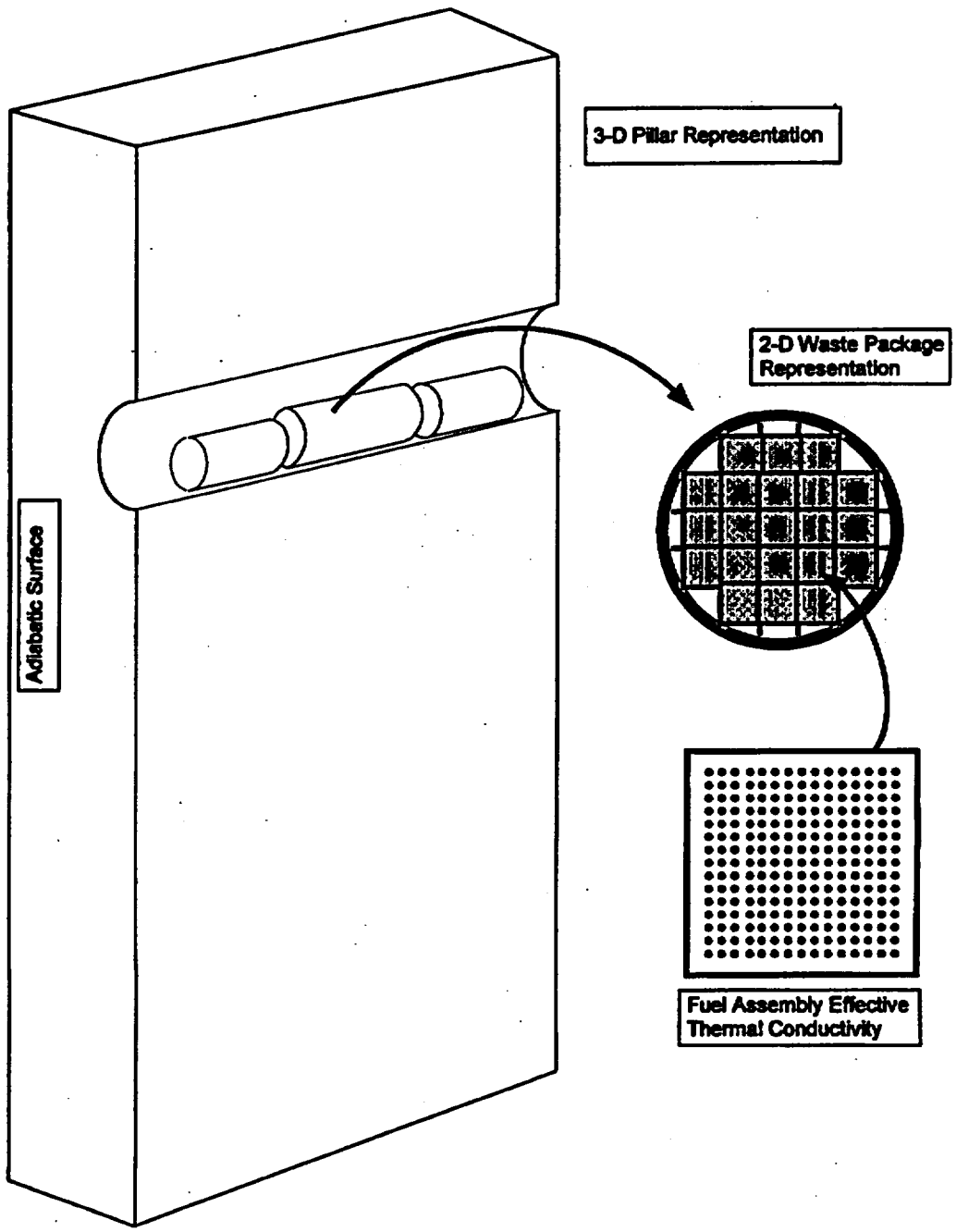

Figure 4. Multi-scale Thermal Analysis Representation

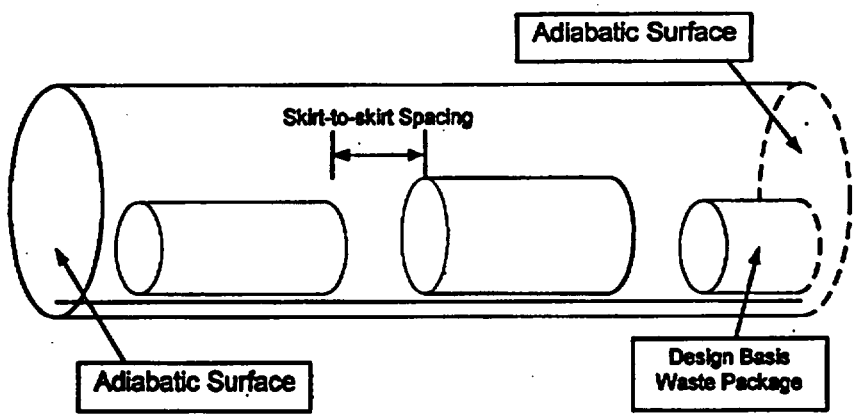

Figure 5. Drift Segment Representation

Once the time-dependent surface temperatures are obtained for the design-basis waste package, as shown in Table 12 for a range of skirt-to-skirt separations (CRWMS M&O 2000m, p. 80), these serve as boundary conditions for a two-dimensional analysis of the internals of the waste package. For the analyses that assume the incorporation of backfill, an effective thermal conductivity of 0.2 W/m·K was used.

Two-dimensional analyses of the internals of the waste package obtain the peak fuel cladding temperatures for the design basis waste package. Results from the applications of these representations are shown in Table 13 for a range of skirt-to-skirt separations (CRWMS M&O 2000n, p. 22). Pre-closure ventilation periods of both 25 and 50 years were analyzed. This roughly corresponds to the interval between the initial emplacement of waste packages and the final emplacement, assuming a total ventilation period of 50 years. Also note these results do not incorporate the use of backfill. Compliance is demonstrated because the peak fuel cladding temperatures are less than 350 °C.

The demonstration of compliance to the 570 °C-temperature limit for short-term exposure to a fire will not be performed for SR.

Table 12. Temperatures for 21-PWR Design Basis Waste Package

Skirt-to-Skirt Spacing (m)	Ventilation Time[g] (yr)	Initial Linear Power (kW/m)	Back-fill (Yes/No)	Pre-closure Drift Wall[a]		Post-closure Drift Wall[a]		Design Basis 21-PWR SNF Waste Package		
				Peak Temperature (°C)	Time (yr)[g]	Peak Temperature (°C)	Time (yr)[g]	Peak Surface Temperature (°C)	Time (yr)[g]	Thermal Output (W)
0.1	25	1.464	Yes	90	10	293	35	401[e]	32	6443
1	25	1.239	Yes	81	10	252	34	350[e]	31	6541
2	25	1.058	Yes	73	10	216	34	305[e]	31	6541
5	25	0.737	Yes	61	10	155	33	238[e]	29	6747
10	25	0.489	Yes	51	15	107	32	200[d]	28	6856
0.1	25	1.464	No	89[b]	15	206[c]	35	239[f]	35	6158
1	25	1.239	No	80[b]	10	175	45	210[f]	34	6252
2	25	1.058	No	73	10	149	35	192[f]	35	6158
5	25	0.737	No	61	10	106	35	163[f]	30	6640
10	25	0.489	No	51	15	83	35	154[d]	28	6856
0.1	50	1.464	Yes	89[b]	15	217	60	297[d]	58	4498
0.5	50	1.354	Yes	84[b]	15	202	60	278[d]	58	4498
1	50	1.239	Yes	80[b]	10	186	60	259[e]	57	4557
1.5	50	1.142	Yes	76	10	173	60	244[e]	56	4616
0.1	50	1.464	No	89[b]	15	155	80	185[f]	60	4396
0.5	50	1.354	No	84[b]	15	144	70	176[f]	60	4396
1	50	1.239	No	80[b]	10	132	70	166[f]	60	4396
1.5	50	1.142	No	76	10	122	70	158[f]	60	4396

NOTES:
[a] All peak drift wall temperatures at invert/drift wall abutment unless otherwise noted.
[b] Peak temperature located at drift wall top surface.
[c] Peak temperature located at drift wall side surface.
[d] Peak temperature located at waste package top surface.
[e] Peak temperature located at waste package side surface
[f] Peak temperature located at waste package bottom surface.
[g] Time after emplacement.

Table 13. Peak Cladding Temperatures

Ventilation Period (years)	Skirt-to-Skirt Spacing (m)	Peak Cladding Temperature (°C)	Time of Occurrence (years)[a]
25	0.1	282.2	35
50	0.1	215.7	65
25	1.0	256.5	31
25	2.0	239.9	32

NOTE: [a] Time after emplacement.

6.2.1.6 Retrieval Contingency Period (1.2.1.8)

Since the heaviest waste package is the limiting waste package for the purposes of retrieval, the Naval Canistered Spent Nuclear Fuel waste package, rather than a UCF waste package, will be evaluated (CRWMS M&O 2000b, Section 4.1.1).

6.2.1.7 Inspectability of Waste Packages (1.2.1.11)

It may be demonstrated by inspection of the sketches shown in Attachments I and II that external surfaces are accessible for visual inspection and decontamination.

6.2.1.8 Accommodation of Filler (1.2.1.15)

During the License Application Design Selection effort, incorporation of filler in a 21-PWR waste package was investigated in *License Application Design Selection Feature Report: Additives and Fillers* (CRWMS M&O 1999c). This evaluation demonstrated that filler material, such as iron shot or depleted uranium can be incorporated into UCF waste packages.

6.2.1.9 Capacity of Lifting Devices – Tensile Yield Strength (1.2.1.16)

The UCF waste packages are lifted using attachable trunnion rings that are designed to lock into collar sleeves (grooves) on the surface of the waste package (see Section 6.2.3.5). The structural response of UCF waste package during horizontal and vertical lifting events is evaluated in the calculation entitled *Waste Package Lifting Calculation* (CRWMS M&O 2000q). Maximum stress intensities for each component of the waste package are reported in Tables 14 and 15 (CRWMS M&O 2000q, Section 6, Tables 6-1, 6-3, 6-5, and 6-7). The applicable lifting criterion is that the tensile yield strength of the material is to be at least three times the maximum expected lifting stress.

Table 14. Summary of Results of Horizontal Lifting of UCF Waste Packages

	Waste Package Component	Maximum Stress Intensity (MPa)
21-PWR UCF Waste Package	Upper Trunnion Lifting Collar Sleeves	15.5
	Lower Trunnion Lifting Collar Sleeves	14.8
	Outer Shell and Lids	7.5
	Inner Shell and Lids	5.5
	Waste Package Component	**Maximum Stress Intensity (MPa)**
44-BWR UCF Waste Package	Upper Trunnion Lifting Collar Sleeves	11.1
	Lower Trunnion Lifting Collar Sleeves	11.0
	Outer Shell and Lids	5.3
	Inner Shell and Lids	3.2

Table 15. Summary of Results of Vertical Lifting of UCF Waste Packages

	Waste Package Component	Maximum Stress Intensity (MPa)
21-PWR UCF Waste Package	Upper Trunnion Lifting Collar Sleeves	12.4[a]
	Outer Shell and Lids	6.2
	Inner Shell and Lids	1.3
	Waste Package Component	**Maximum Stress Intensity (MPa)**
44-BWR UCF Waste Package	Upper Trunnion Lifting Collar Sleeves	12.2
	Outer Shell and Lids	6.2
	Inner Shell and Lids	1.3

NOTE: [a] First principal stress, in lieu of stress intensity, is reported due to greater magnitude.

Compliance is demonstrated because the tensile yield strength of alloy 22 (310 MPa [ASTM B 575-97, Table 3]) is more than three times larger than the maximum expected stress of alloy 22 (15.5 MPa). Similarly, the tensile yield strength of stainless steel (207 MPa [ASME 1995, Table Y-1]) is more than three times larger than the maximum expected stress (5.5 MPa) of stainless steel.

6.2.1.10 Capacity of Lifting Devices – Ultimate Tensile Strength (1.2.1.17)

The horizontal and vertical lifting stress characteristics for UCF waste packages are identical to the description provided in Section 6.2.1.9. However the applicable lifting criterion is that the ultimate tensile strength of the material is to be at least five times the maximum expected lifting stress.

Compliance is demonstrated because the ultimate tensile strength of alloy 22 (690 MPa [ASTM B 575-97, *Standard Specification for Low-Carbon Nickel-Molybdenum-Chromium, Low-Carbon Nickel-Chromium-Molybdenum, Low-Carbon Nickel-Chromium-Molybdenum-Copper and Low-Carbon Nickel-Chromium-Molybdenum-Tungsten Alloy Plate, Sheet, and Strip,* Table 3]) is more than five times larger than the maximum expected stress of alloy 22 (15.5 MPa). Similarly, the ultimate tensile strength of stainless steel (517 MPa [ASME 1995, Table U]) is to be more than five times larger than the maximum expected stress of stainless steel (5.5 MPa).

6.2.1.11 Design for Normal Handling Operations (1.2.1.18)

In order to withstand transfer, emplacement, and retrieval operations, the waste package is designed to be vertically and horizontally lifted using attachable trunnion rings. Sections 6.2.1.9 and 6.2.1.10 identify the waste package stress intensities that are a result of these operations, and demonstrate compliance to the maximum allowable stress intensities.

6.2.1.12 Use of Non-combustible and Heat-resistant Materials (1.2.1.19)

It may be demonstrated by inspection of the sketches shown in Attachments I and II that the material call-outs for all components of the waste packages are metallic and, hence, non-combustible. Similarly, the metals selected, which are not necessarily refractory, are resistant to heat.

6.2.1.13 Avoidance of Explosive or Pyrophoric Materials (1.2.1.20)

It may be demonstrated by inspection of the sketches shown in Attachments I and II that the material call-outs for all components of the waste packages avoid both explosive and pyrophoric materials.

6.2.1.14 Exclusion of Free Liquids (1.2.1.21)

It may be demonstrated by inspection of the component material call-outs of the sketches shown in Attachments I and II that UCF waste packages exclude the use of free liquids.

6.2.2 Safety Criteria

6.2.2.1 Pre-closure Rock Fall without Breach (1.2.2.1.1)

The survivability of a 21-PWR absorber plate waste package due to a pre-closure rock fall has been demonstrated for a 5-cm structural shell and a 2-cm corrosion-resistant shell in a calculation entitled, *Rock Fall and Vertical Drop Calculations of Waste Packages* (CRWMS M&O 1999d). This design was selected as representative for this event (CRWMS M&O 2000b, Section 4.1.2).

The mass of the rock that falls during a design-basis rock fall is 13 MT. This rock is assumed to be spherical in geometry and falls from the roof of the drift onto the unprotected waste package. The rock is assumed to drop from 3.1 m above the waste package. The results of this calculation are summarized in Table 16 (CRWMS M&O 1999d, Table 6.1-2, page 18). Survival of the waste package is demonstrated by showing that the maximum calculated stress is less than 90% of the ultimate tensile strength of the shell materials. This result is consistent with the requirements discussed in Section 6.2.4.2.

Table 16. Summary of Results for Rock Fall Calculation

Shell Composition	Shell Thickness (cm)	Calculated Maximum Stress (MPa)	Ultimate Tensile Stress, S_U ($0.9 \cdot S_U$)
Alloy 22	2.0	563	690 MPa[a] (621 MPa)
Stainless Steel	5.0	291	517 MPa[b] (465 MPa)

NOTES: [a] Source: ASTM B 575-97, Table 3 (value at 20 °C).
[b] Source: ASME 1995, Table U (value at 96 °C).

6.2.2.2 Pre-closure Vertical Drop without Breaching (1.2.2.1.3)

Since the heaviest waste package with greatest internal load is the limiting waste package for the purposes of handling during normal operations (i.e., non-accident), the Naval Canistered Spent Nuclear Fuel waste package, rather than a UCF waste package, will be evaluated (CRWMS M&O 2000b, Section 4.1.2).

6.2.2.3 Pre-closure Horizontal Drop without Breaching (1.2.2.1.4)

Since the heaviest waste package with the greatest resulting load on the shells is the limiting waste package for the purposes of a horizontal drop onto an unyielding surface, the Naval Canistered Spent Nuclear Fuel waste package, rather than a UCF waste package, will be evaluated (CRWMS M&O 2000b, Section 4.1.2).

6.2.2.4 Pre-closure Horizontal Drop without Puncture (1.2.2.1.5)

The structural response of the BWR-44 waste package was evaluated for this event in the calculation entitled *Puncture Drop of the 44-BWR Waste Package* (CRWMS M&O 2000p). The results of this calculation are shown in Table 17 (CRWMS M&O 2000p, Section 6, Table 6-1). The resulting stresses for both shells comprising the waste package are less than 90% of the ultimate tensile strength of those materials; therefore, the waste packages will not breach as a result of puncture. This requirement is consistent with the requirements discussed in Section 6.2.4.2.

Table 17. Summary of Results of Puncture Drop Calculation for 44-BWR Waste Package

Waste Package Material	Maximum Stress Intensity (MPa)	Ultimate Tensile Stress S_U ($0.9 \cdot S_U$)
Alloy 22	354	690 MPa[a] (621 MPa)
Stainless Steel	274	517 MPa[b] (465 MPa)
Carbon Steel A516 Grade 70	273	482 MPa[b] (434 MPa)

NOTES: [a] Source: ASTM B 575-97, Table 3 (value at 20 °C).
[b] Source: ASME 1995, Table U (value at 96 °C).

6.2.2.5 Pre-closure Slap Down without Breaching (1.2.2.1.6)

The slap-down analysis of a 21-PWR waste package was simulated in the calculation entitled, *Waste Package Tipover of 21-PWR* (CRWMS M&O 2000c). The results of this calculation are shown in Table 18 (CRWMS M&O 2000c, Section 6, Table 6-1). The resulting stresses for both of the shells comprising the waste package are less than 90% of the ultimate tensile strength of those materials; therefore, the waste packages will not breach as a result of the horizontal drop and the requirement is met. This requirement is consistent with the requirements discussed in Section 6.2.4.2.

Table 18. Summary of Results of Slap-down Calculation for 21-PWR Waste Package

Waste Package Component	Maximum Stress Intensity (MPa)	Maximum Membrane Stress Intensity (MPa)	Maximum Membrane Plus Bending Stress Intensity (MPa)	Ultimate Tensile Stress S_U ($0.9 \cdot S_U$)
Outer shell and lids	552.8	486.2	552.8	690 MPa[a] (621 MPa)
Inner shell and lids	327.0	286.1	325.6	517 MPa[b] (465 MPa)
Upper lifting collar sleeve	624.1	589.8	661.5	690 MPa[a] (621 MPa)
Lower lifting collar sleeve	563.9	429.5	563.8	690 MPa[a] (621 MPa)
Tubes	373.3	262.9	344.0	482 MPa[b] (434 MPa)
Criticality control plates	859.2	806.5	859.1	550 MPa[c] (495 MPa)
Side guides	507.5	470.8	507.5	482 MPa[b] (434 MPa)
Corner guide	310.0	288.0	310.0	482 MPa[b] (434 MPa)

NOTES: [a] Source: ASTM B 575-97, Table 3 (value at 20 °C).
[b] Source: ASME 1995, Table U (value at 96 °C).
[c] Source: Kugler 1997, p. 17 (value at 20 °C)

6.2.2.6 Sustain Design Basis Earthquake (1.2.2.1.7)

Since the waste package with the largest diameter, and hence the highest center of gravity, is the limiting waste package for impacts on the end of a waste package, the 5-DHLW/DOE SNF waste package, rather than a UCF waste package, will be evaluated (CRWMS M&O 2000b, Section 4.1.2).

6.2.2.7 Sustain Pre-closure Missile Impact without Breaching (1.2.2.1.8)

The impact of a missile on a UCF waste package is assessed in the calculation entitled, *Pressurized System Missile Impact on Waste Packages* (CRWMS M&O 2000e). The effect of dynamic impact on the waste package shell is determined using the empirical relations developed for perforation of plates by a rigid mass.

The range of missile characteristics is shown in Table 19 (CRWMS M&O 2000e, Section 5.2).

Table 19. Range of Missile Characteristics

	Case 1	Case 2	Case 3
Missile diameter (mm)	10	20	30
Missile mass (kg)	0.5	1.0	1.5
Missile velocity (m/s)	5.7	6.0	6.3

Note that the parameters for the analysis denoted as "Case 1" are consistent with the requirements in the SDD.

The missile velocities required to obtain perforation are provided in Table 20 (CRWMS M&O 2000e, Section 6).

Table 20. Missile Velocity (m/s) Required to Perforate Waste Package

	Case1	Case 2	Case 3
21-PWR Waste Package	322	383	424
44-BWR Waste Package	322	383	424

Note that the velocity cited in the requirement is much less than the required velocities; therefore, there is large margin to waste package breach due to missile impact.

6.2.2.8 Pre-closure Internal Pressure Limit (1.2.2.1.10)

The pressurization of a 21-PWR waste package due to the rupture of all of the fuel rods contained in the waste package is evaluated in a calculation entitled, *Internal Pressurization due to Fuel Rod Rupture in Waste Packages* (CRWMS M&O 2000d). The calculation used basic relationships from solid mechanics to determine the maximum stresses in the waste package shells. In this evaluation, the inner lid is assumed to fail before the outer lid; however, no structural credit is assumed for the outer lid. Evaluations were performed over uniform waste package temperatures ranging from 20 °C to 600 °C. The peak stresses (membrane and bending) at the junction of the shell and lid from these evaluations are shown in Table 21 (CRWMS M&O 2000d, Section 6).

Table 21. Summary of Internal Pressurization Calculations

Temperature (°C)	21-PWR Total Stress (MPa)	44-BWR Total Stress (MPa)
20	63	66
200	102	107
350*	134	140
400	145	151
570*	181	188
600	187	195

NOTE: * These values were obtained by linear interpolation.

The peak temperature within the waste package is limited to, by design, a maximum of 570 °C (SDD criteria 1.2.1.6 for short-term exposure to a fire).

The ultimate tensile strength of the stainless steel (SA-240 S31600; 316NG) at the highest temperature (1000 °F, which is 538 °C) available in the ASME code is 64.4 ksi (443.9 MPa) (*ASME Boiler and Pressure Vessel Code*, ASME 1995, Section II, Table U). An extrapolation using the last two data points, 66.5 ksi (458.4 MPa) at 950 °F (510 °C) and the value at 1000 °F gives 62.0 ksi (427.4 MPa) at 1058 °F (570 °C). The maximum stresses at 570 °C (181 MPa for the 21-PWR waste package and 188 MPa for the 44-BWR waste package) are less than the material strength (384.7 MPa, including the 90% multiplier). While there may be some error in the extrapolation, there is large margin; however, the fundamental validity of such an extrapolation is seen from the catalog of a stainless steel vendor, which provides ultimate tensile strengths for temperatures up to 1,600 °F (871 °C) (Allegheny Ludlum 1987, Type 316 Stainless Steel).

This requirement is consistent with the requirements discussed in Section 6.2.4.2.

6.2.2.9 Avoidance of Pre-closure Criticality and Margin Requirement (1.2.2.1.12)

The demonstration of margin to criticality during the pre-closure period was calculated in *21 PWR Waste Package Loading Curve Evaluation* (CRWMS M&O 2000f). This evaluation was performed using the methodology described in the *Disposal Criticality Analysis Methodology Topical Report* (YMP 1998). The margin requirement to criticality for the preclosure period was established in the *Preclosure Criticality Analysis Process Report* (CRWMS M&O 1999e) and has a value of 0.929.

The resulting pre-closure loading curves are shown in Figure 6. Note that the temperatures represent two isothermal states of the waste package and demonstrate the sensitivity with temperature.

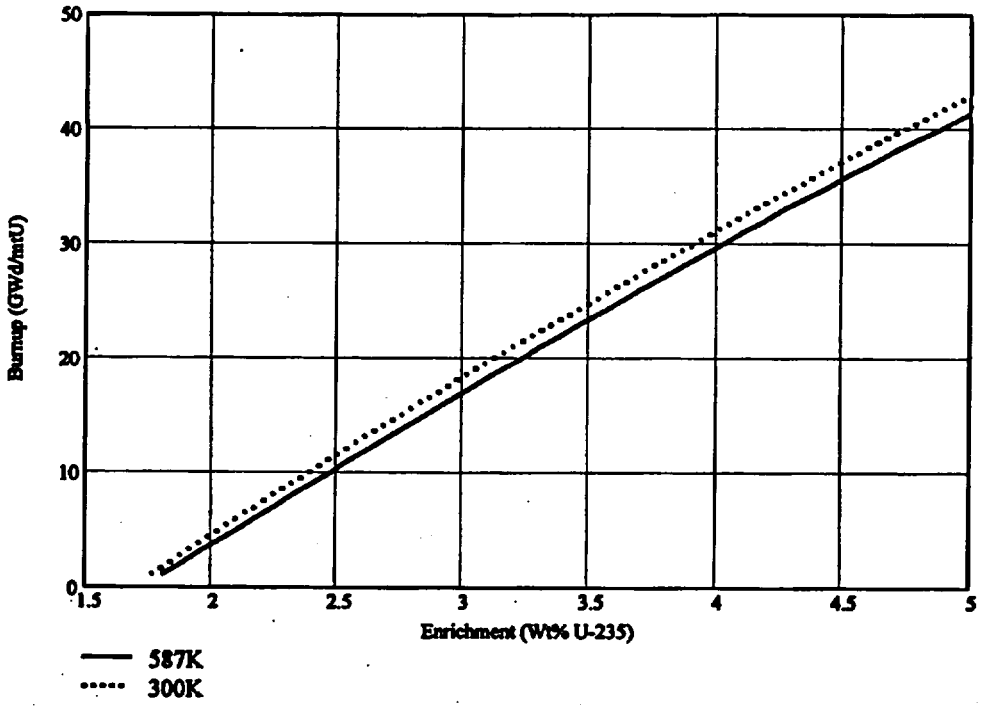

Figure 6. Pre-closure Loading Curve for 0.929 Upper Sub-critical Limit

6.2.2.10 Maximum Radionuclide Inventory Increase due to Post-closure Criticality (1.2.2.1.13)

Criticality in the post-closure period is mitigated by creating a pair of loading curves, one for an intact waste form in a flooded waste package, and another for a degraded waste form in a flooded waste package. The implementation of these loading curves renders the occurrence of a post-closure criticality not credible.

The demonstration of margin to criticality during the post-closure period was calculated in *21 PWR Waste Package Loading Curve Evaluation* (CRWMS M&O 2000f). This evaluation was performed using the methodology described in the *Disposal Criticality Analysis Methodology Topical Report* (YMP 1998). The margin requirement ranges from 0.988 to 0.979 over the burnup range from 0.0 to 33.1 GWd/mtU, which is recommended by the criticality methodology report (YMP 1998, page 4-26).

The resulting post-closure loading curves, for both intact and degraded configurations, are shown in Figure 7.

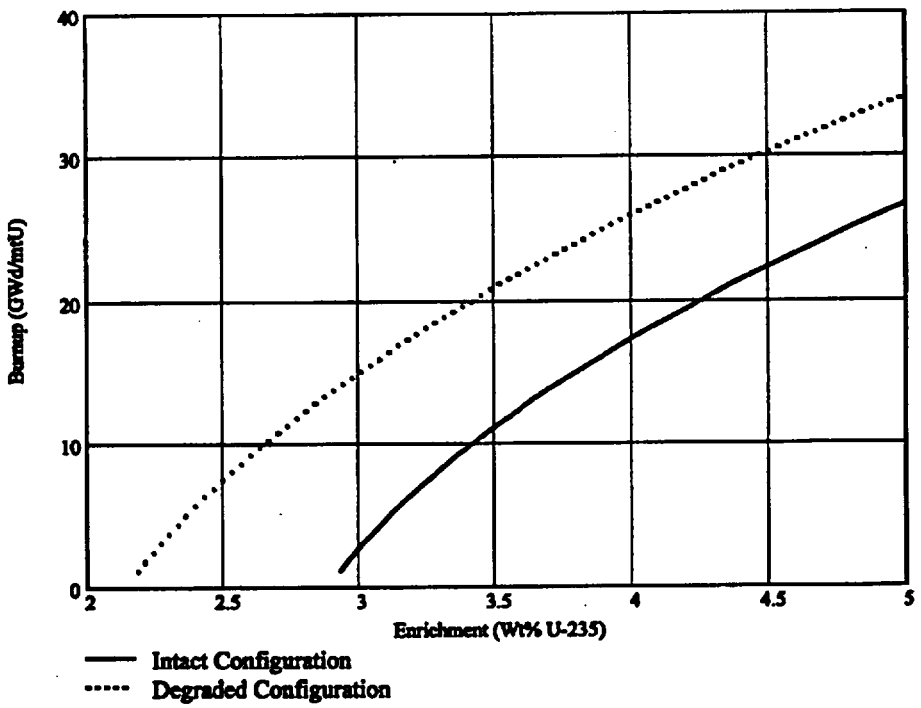

Figure 7. Post-closure Loading Curves

6.2.3 System Interfacing Criteria

6.2.3.1 Limitation on Surface Radiation Dose Rate (1.2.4.3)

At present, the limit on radiation dose rate at the surface of the waste package is not specified; however, such dose rates have been computed for both the 21-PWR Absorber Plate and 44-BWR Absorber Plate waste packages. These calculations are included in *Dose Rate Calculation for the 21-PWR UCF Waste Package* (CRWMS M&O 2000g) and *Dose Rate Calculation for the 44-BWR UCF Waste Package* (CRWMS M&O 2000h).

The gamma and neutron spectra for the PWR SNF and BWR SNF were provided by Attachment IV of *PWR Source Term Generation and Evaluation* (CRWMS M&O 1999f) and by Attachment VII of *BWR Source Term Generation and Evaluation* (CRWMS M&O 1999g), respectively.

The second-level confidence (2σ) interval for the estimate of the maximum dose rates on the external surfaces of the 21-PWR waste package is 1,330 ± 60 rem/h. This interval for a 44-BWR waste package is 1,409 ± 32 rem/h.

6.2.3.2 Maximum Heat-generation Rate (1.2.4.4)

The maximum heat-generation rate is imposed by management direction (CRWMS M&O 1999h, Paragraph 1.2.4.4). The waste package thermal design must ensure that such a thermal loading, in conjunction with the balance of the engineered barrier system and natural system, will not result in exceeding the peak-cladding temperature criterion. This is demonstrated in Section 6.2.1.5.

6.2.3.3 Limitation on Inventory of CSNF (1.2.4.5)

The total inventory of CSNF has no effect on the waste package performance provided that other design requirements for the repository are satisfied.

6.2.3.4 Vertical Loading of Waste Forms (1.2.4.6)

It may be demonstrated by inspection of the sketches shown in Attachments I and II that the waste package may be loaded in a vertical orientation.

6.2.3.5 Both Vertical and Horizontal Handling Possible (1.2.4.7)

As may be seen by reviewing the sketches shown in Attachments I and II, the waste packages are designed to accept trunnion rings. The use of such rings permits attachments of fixtures that may be used for both vertical and horizontal handling of the waste package, as well as attitudes between vertical and horizontal. This is also illustrated in Figure 8.

These trunnion rings are removed after the waste package is placed on the emplacement pallet; therefore, the use of such rings does not create a site for crevice corrosion cracking. Further, the trunnion rings are attached to a corresponding built-up area on the waste package and will not induce stresses that might exacerbate corrosion of the outer shell.

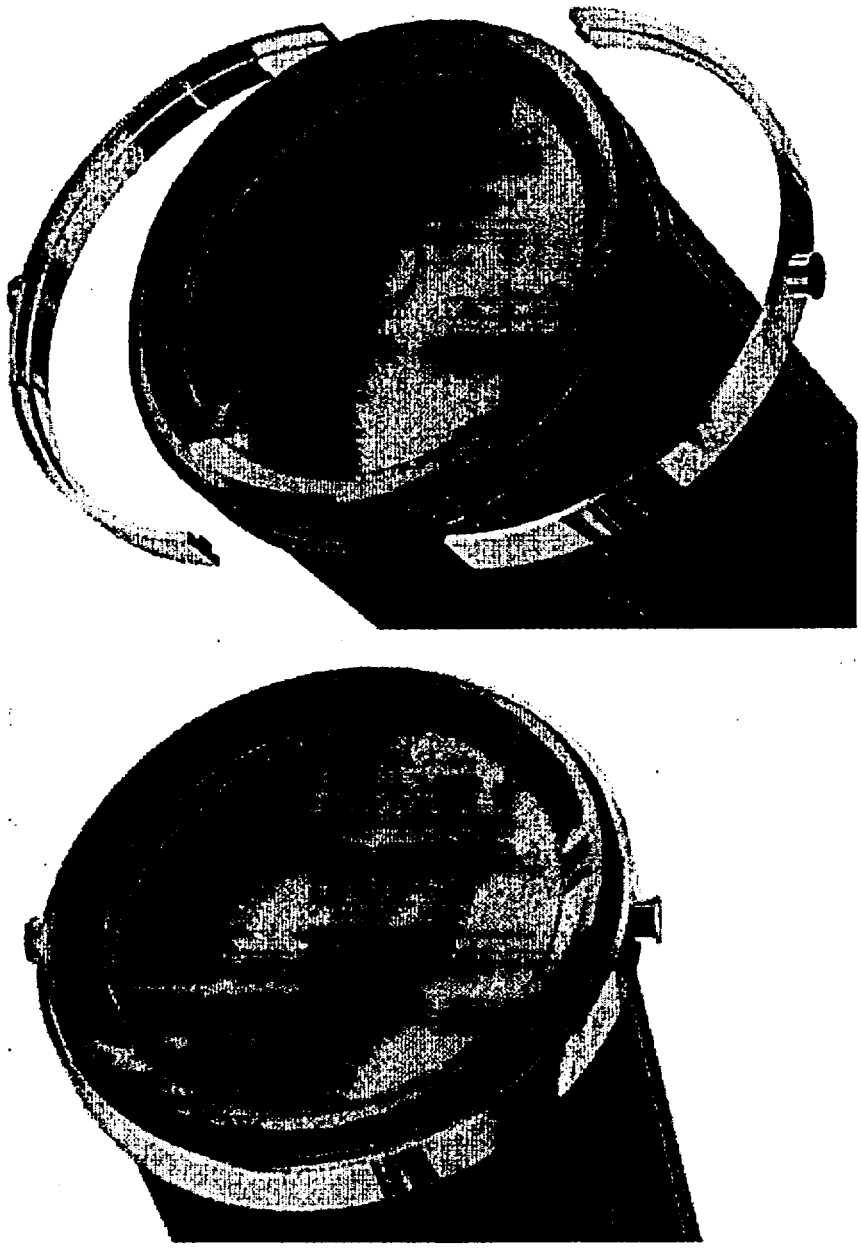

Figure 8. Trunnion Ring Installation

6.2.4 Codes and Standards Criteria

6.2.4.1 1995 Boiler and Pressure Vessel Code (Section III, Div. 1, Sub-section NG-1995) (1.2.6.1)

There are no codes or standards that apply directly to the design of disposal containers; however, the ASME Boiler and Pressure Vessel Code has been chosen as a guide for setting stress limits for the waste package components. Applications of subsections of Section III of the 1995 ASME Boiler and Pressure Vessel Code are shown in Table 22.

Table 22. Applicability of 1995 ASME Boiler and Pressure Vessel Code

Analysis Type	Component	Section III, Subsection Applied	Service Limits[a]
Static	Shells	Subsection NB	Level A
	Basket	Subsection NG	Level A
Seismic	Shells	Subsection NB, Appendix F	Level D
	Basket	Subsection NG, Appendix F	Level D
Rock Fall	Shells	Subsection NB, Appendix F	Level D
Puncture	Shells	Subsection NB, Appendix F	Level D
	Basket	Subsection NG, Appendix F	Level D
Slap Down	Shells	Subsection NB, Appendix F	Level D
	Basket	Subsection NG, Appendix F	Level D

NOTE: [a] Level A Service Limits are for normal operation, and Level D Service Limits are for off-normal conditions.

For Level A Service Limits, Sub-section NG of the ASME Boiler and Pressure Vessel Code is used as shown in Table 22. From the code, the limitation on membrane and bending stresses at Level A are:

$$P_m + P_b \leq 1.5 \cdot S_m = S_y \qquad \text{(Eq. 1)}$$

Here, P_m is the membrane stress, P_b is the bending stress, and S_m is the design stress intensity for the material. For design purposes, the design stress is assumed to be 2/3 of the yield stress; therefore, the allowable total stress (including both membrane and bending) is equal to the yield stress (S_y).

For Level D Service Limits, Sub-sections NB and NG of the ASME Boiler and Pressure Vessel Code are used as shown in Table 22. From the code, the limitation on membrane and bending stresses at Level D are:

$$P_m + P_b \leq 0.9 \cdot S_u \qquad \text{(Eq. 2)}$$

Here, S_u is the ultimate tensile strength of the material.

6.2.4.2 1995 Boiler and Pressure Vessel Code (Section III, Div. 1, Sub-section NB-1995) (1.2.6.2)

Sub-section NB of the ASME Boiler and Pressure vessel codes is used as shown in Table 22. Level A and Level D service limits are the same as in Section 6.2.4.1, Equations 1 and 2, respectively.

6.2.4.3 Nuclear Criticality Control of Special Actinide Elements (ANSI/ANS-8.15-1981) (1.2.6.3)

ANSI/ANS-8.15-1981 is specifically cited in the *Disposal Criticality Analysis Methodology Topical Report* (YMP 1998, Section 2.3.2, page 2-9) as a governing requirements document. Since this document defines the methodology used for all criticality evaluations, this standard has been applied to all criticality results cited in this document.

6.2.4.4 Nuclear Criticality Safety in Operations with Fissionable Materials Outside Reactors (ANSI/ANS-8.1-1983) (1.2.6.4)

ANSI/ANS-8.1-1983 is specifically cited in the *Disposal Criticality Analysis Methodology Topical Report* (YMP 1998, Section 2.3.2, page 2-9) as a governing requirements document. Since this document defines the methodology used for all criticality evaluations, this standard has been applied to all criticality results cited in this document. This is a previous version of the 1998 standard, and the newer standard (i.e., the 1998 version) was not cited in the topical report because the documents are contemporaneous.

6.2.4.5 Criteria for Nuclear Safety Controls in Operations with Shielding and Confinement (ANSI/ANS-8.10-1983) (1.2.6.5)

ANSI/ANS-8.10-1983 is specifically cited in the *Disposal Criticality Analysis Methodology Topical Report* (YMP 1998, Section 2.3.2, page 2-10) as a governing requirements document. Since this document defines the methodology used for all criticality evaluations, this standard has been applied to all criticality results cited in this document.

6.2.4.6 Criticality Safety Criteria for the Handling, Storage, and Transportation of LWR Fuel Outside Reactors (ANSI/ANS-8.17-1984) (1.2.6.6)

ANSI/ANS-8.17-1984 is specifically cited in the *Disposal Criticality Analysis Methodology Topical Report* (YMP 1998, Section 2.3.2, page 2-9) as a governing requirements document. Note that this standard was reaffirmed in 1989. Since this document defines the methodology used for criticality evaluations, this standard has been applied to all criticality results cited in this document.

6.3 SATISFACTION OF ICD REQUIREMENTS

While the ICDs governing interfaces between WPD and the SFD (CRWMS M&O 1998b) and between WPD and the SSFD (CRWMS M&O 1998c) will not be specifically addressed until LA, this section reviews the requirements of those ICDs and demonstrates what information is already available. This availability only applies to the 21-PWR Absorber Plate waste package.

6.3.1 ICD with Surface Facilities Department

The interface requirements with the SFD are shown in Table 23, along with the current availability of those values. Only those requirements that are the responsibility of WPD are enumerated.

Table 23. Interface Requirements between WPD and SFD

ICD Section	Description	Availability of Information
6.2.2	Fuel Basket Tubes	The necessary dimensions are shown in sheet 1 of Attachment I; however, tolerances are not provided.
6.2.3	Disposal Container Lids	The necessary dimensions are shown in sheet 1 and Detail "C" of sheet 2 of Attachment I; however, tolerances are not provided.
6.2.4	Shells Weldment	Attachment I shows the locations and approximate size of the weldments; however, this information is insufficient for fabrication purposes.
6.2.5	Disposal Container Closure Welder	Information about the welder is not available at present.

6.3.2 ICD with Subsurface Facilities Department

The interface requirements with the SSFD do not currently contain any requirements that affect the 21-PWR waste package beyond an enumeration of the suite of waste packages; therefore, no further review of this ICD will be conducted.

6.4 SATISFACTION OF OTHER CONSIDERATIONS

6.4.1 Tensile Stress Relaxation of Final Closure Weld by Induction Annealing

To demonstrate that induction annealing has the potential to achieve the necessary depth of tensile stress reduction in the outer closure lid of the outer shell, a calculation entitled, *Residual Stress Minimization of Waste Packages from Induction Annealing* (CRWMS M&O 2000i) was performed. The calculation represented an axisymmetric portion of the waste package outer shell that contained the final closure weld for the outermost lid. It was assumed that the outer shell is sufficiently thermally de-coupled from the inner shell that any heat transfer is negligible. This is true both for heat transfer into the waste package from the annealing process and heat transfer from the decaying waste form. This maximizes the residual stress intensity since it provides the largest temperature differential.

This calculation examined five different weld designs to determine which one offered the best induction annealing stress relief. The fifth design outperformed the others with a calculated residual stress field after the annealing process that was 5.8 mm in depth.

6.4.2 Tensile Stress Relaxation of Final Closure Weld by Laser Peening

Laser peening will be used to reduce residual tensile stresses in the closure weld of the outer shell closure lid. Laser peening changes the stress field in metallic materials from tensile to compressive by the impulse effect of laser-induced plasma. A part of the light is absorbed and vaporizes a small amount of surface material. The vapor is heated to a very high temperature. At such temperatures electrons are stripped from the vaporized atoms to form plasma. The rapid vaporization generates a stress wave at the surface, which propagates into the material. It changes the metal's microstructure hence, improving the material property. Generating high amplitude stress waves involves placing a material, which is transparent to the incident laser, on the surface. This material can be solid or liquid and functions to confine the vaporized surface material. In Iron-Silicon alloy, stress reduction depths have been measured to 2 mm (Fairand and Clauer 1978).

6.4.3 Adequacy of Stress Reduction

It was determined in *Waste Package Degradation Process Model Report* (CRWMS M&O 2000l, Section 3.1.7.6.3) that a reduction to 20% or less of yield stress for 2 to 3 mm by laser peening and 6.5 mm by induction annealing is sufficient.

7. CONCLUSIONS

This analysis describes the design activities used by the WPD to design UCF waste packages. The conclusions that are provided in this section summarize whether these activities meet the necessary design requirements. However, these conclusions are not intended to make any final recommendations regarding the final design of either the waste packages or the repository. The treatment of uncertainties in this design analysis falls into one of two categories. For most, parameters are selected that produce net conservative results. These require no additional treatment. For a few, comparison against benchmarks, either experimental or high-order computational methods, must be performed. Uncertainty identification and experimental and computational benchmarks are to be addressed for License Application.

This document may be affected by technical product input information that requires confirmation. Any changes to the document that may occur as a result of completing the confirmation activities will be reflected in subsequent revisions. The status of the input information quality may be confirmed by review of the Document Input Reference System database.

Confirmation of the technical product input information contained in the Document Input Reference System should not impact the conclusions that are provided herein.

7.1 SATISFACTION OF UCF SDD REQUIREMENTS

7.1.1 System Performance Criteria

The satisfaction summary of the UCF SDD requirements on system performance is provided in Table 24.

Table 24. Summary of System Performance Criteria in UCF SDD

Section		Summary of Requirements	SR/LA	Conclusions
SDD	Herein			
1.2.1.1	6.2.1.1	Accommodation of Intact Fuel Assemblies	SR	Compliance Demonstrated
1.2.1.2	N/A	Accommodation of Sealed, Disposable, Single-element SNF Canisters	LA	Such canisters will be inserted into the waste package specifically designed to accommodate fuel assemblies from the South Texas plant. This design will not be developed for SR.
1.2.1.3	6.2.1.2	Limiting Total Effective Dose due to Combination of Waste Package, Emplacement Drift System and Natural System	SR	Demonstration of compliance with requirement is contingent upon the completion of TSPA-SR.
1.2.1.4	6.2.1.3	Thicknesses and Composition of both Shells Comprising the Waste Package	SR	Compliance Demonstrated
1.2.1.5	6.2.1.4	Waste Package Reliability at 10,000 Years	SR	Demonstration of compliance with requirement is contingent upon the completion of TSPA-SR.

Table 24 (Continued)

Section		Summary of Requirements	SR/LA	Conclusions
SDD	Herein			
1.2.1.6	6.2.1.5	Peak-cladding Temperature for Zircaloy-clad Fuel	SR/LA	Compliance to the 350 °C limit for normal conditions was demonstrated. Compliance to the 570 °C limit for short-term exposure to fire will not be performed for SR.
1.2.1.7	N/A	Prevention of Fuel Breach during Handling	LA	
1.2.1.8	6.2.1.6	Retrieval Contingency Period	SR	The Naval Canistered Spent Nuclear Fuel waste package will be evaluated to demonstrate compliance with this requirement.
1.2.1.9	N/A	Limitation on Oxidizers within Waste Package	LA	
1.2.1.10	N/A	External Surface Roughness Requirement	LA	
1.2.1.11	6.2.1.7	Inspectability of Closed Waste Package	SR	Compliance Demonstrated
1.2.1.12	N/A	Labeling Requirement	LA	
1.2.1.13	N/A	Benign Labeling	LA	
1.2.1.14	N/A	Legibility of Labeling	LA	
1.2.1.15	6.2.1.8	Provision for Accommodation of Filler	SR	Compliance Demonstrated
1.2.1.16	6.2.1.9	Capacity of Lifting Devices as Fraction of Yield Stress	SR	Compliance Demonstrated
1.2.1.17	6.2.1.10	Capacity of Lifting Devices as Fraction of Ultimate Tensile Strength	SR	Compliance Demonstrated
1.2.1.18	6.2.1.11	Design for Normal Handling Operations	SR	Compliance Demonstrated
1.2.1.19	6.2.1.12	Use of Non-combustible and Heat-resistant Materials	SR	Compliance Demonstrated
1.2.1.20	6.2.1.13	No Explosive or Pyrophoric Materials	SR	Compliance Demonstrated
1.2.1.21	6.2.1.14	No Free Liquids within the Waste Package	SR	Compliance Demonstrated

7.1.2 Safety Criteria

The satisfaction summary of the UCF SDD requirements on safety is provided in Table 25.

Table 25. Summary of Safety Criteria in UCF SDD

Section		Summary of Requirements	SR/LA	Conclusions
SDD	Herein			
1.2.2.1.1	6.2.2.1	Pre-closure Rock Fall without Breach	SR	Compliance Demonstrated
1.2.2.1.2	N/A	Pre-closure Impact on End of Waste Package without Breach	LA	
1.2.2.1.3	6.2.2.2	Pre-closure Vertical Drop without Breaching	SR	The Naval Canistered Spent Nuclear Fuel waste package will be evaluated to demonstrate compliance with this requirement.
1.2.2.1.4	6.2.2.3	Pre-closure Horizontal Drop without Breaching	SR	The Naval Canistered Spent Nuclear Fuel waste package will be evaluated to demonstrate compliance with this requirement.
1.2.2.1.5	6.2.2.4	Pre-closure Horizontal Drop without Puncture	SR	Compliance Demonstrated
1.2.2.1.6	6.2.2.5	Pre-closure Slap Down without Breaching	SR	Compliance Demonstrated
1.2.2.1.7	6.2.2.6	Sustain Design Basis Earthquake	SR	The 5-DHLW/DOE SNF waste package will be evaluated to demonstrate compliance with this requirement.
1.2.2.1.8	6.2.2.7	Sustain Pre-closure Missile Impact without Breaching	SR	Compliance Demonstrated
1.2.2.1.9	N/A	Sustain Pre-closure Design Basis Transporter Accident	LA	
1.2.2.1.10	6.2.2.8	Pre-closure Internal Pressure Limit	SR	Compliance Demonstrated
1.2.2.1.11	N/A	Sustain Fire	LA	
1.2.2.1.12	6.2.2.9	Avoidance of Pre-closure Criticality and Margin Requirement	SR	Compliance Demonstrated
1.2.2.1.13	6.2.2.10	Maximum Increase in Radionuclide Inventory during Post-closure Period due to Criticality Event	SR	Compliance was demonstrated by showing margin to the CL for the post-closure period.

7.1.3 System Environment Criteria

The satisfaction summary of the UCF SDD requirements on environment is provided in Table 26.

Table 26. Summary of System Environment Criteria in UCF SDD

SDD Section		Summary of Requirements	SR/LA	Conclusions
SDD	Herein			
1.2.3.1	N/A	The waste package shall meet all performance requirements during and after exposure to the emplacement drift environments.	LA	

7.1.4 System Interfacing Criteria

The satisfaction summary of the UCF SDD requirements on system interfacing is provided in Table 27.

Table 27. Summary of System Interfacing Criteria in UCF SDD

Section		Summary of Requirements	SR/LA	Conclusions
SDD	Herein			
1.2.4.1	N/A	Meet Requirements Contained in ICD with Surface Repository Facilities and Systems	LA	
1.2.4.2	N/A	Meet Requirements Contained in ICD with Subsurface Repository Facilities and Systems	LA	
1.2.4.3	6.2.3.1	Limitation on Surface Radiation Dose Rate	SR	Compliance cannot be demonstrated because the limitation on the radiation dose rate at the external surfaces of the waste package has not, as of yet, been established. However, a demonstration of the surface dose rates is provided.
1.2.4.4	6.2.3.2	Maximum Heat-generation Rate	SR	This value is provided by management direction.
1.2.4.5	6.2.3.3	Limitation on the Inventory of CSNF that must be Disposed	SR	No effect on waste package design provided other repository design requirements are satisfied.
1.2.4.6	6.2.3.4	Vertical Loading of Disposal Container with Waste Forms	SR	Compliance Demonstrated
1.2.4.7	6.2.3.5	Requirement to Provide for both Vertical and Horizontal Handling	SR	Compliance Demonstrated
1.2.4.8	N/A	Welding Times	LA	

7.1.5 Codes and Standards Criteria

The satisfaction summary of the UCF SDD requirements on codes and standards is provided in Table 28.

Table 28. Summary of Codes and Standards Criteria in UCF SDD

Section		Summary of Requirements	SR/LA	Conclusions
SDD	Herein			
1.2.6.1	6.2.4.1	1995 ASME Boiler and Pressure Vessel Code (Section III, Division 1, Subsection NG–1995).	SR	Code was implemented.
1.2.6.2	6.2.4.2	1995 ASME Boiler and Pressure Vessel Code (Section III, Division 1, Subsection NB–1995).	SR	Code was implemented.
1.2.6.3	6.2.4.3	Nuclear Criticality Control of Special Actinide Elements (ANSI/ANS-8.15-1981)	SR	Code was implemented.
1.2.6.4	6.2.4.4	Nuclear Criticality Safety in Operations with Fissionable Materials Outside Reactors (ANSI/ANS-8.1-1983).	SR	Code was implemented.
1.2.6.5	6.2.4.5	Criteria for Nuclear Safety Controls in Operations with Shielding and Confinement (ANSI/ANS-8.10-1983).	SR	Code was implemented.
1.2.6.6	6.2.4.6	Criticality Safety Criteria for the Handling, Storage, and Transportation of LWR Fuel Outside Reactors (ANSI/ANS-8.17-1984).	SR	Code was implemented.

7.2 SATISFACTION OF ICD REQUIREMENTS

The two ICDs that govern interfaces between WPD and SFD, and WPD and SSFD, were reviewed and all information in the existing versions of those ICDs was identified as available.

7.3 SATISFACTION OF OTHER CONSIDERATIONS

It was shown that a reduction of residual weld stress to a value less than 20% of yield stress is possible. This is accomplished by a combination of induction annealing of the closure weld for the outer shell extended lid and laser peening of the closure lid for the outer shell closure lid. This residual stress reduction was found to be of adequate depth in the *Waste Package Degradation Process Model Report* (CRWMS M&O 2000l, Section 3.1.7.6.3) to ensure an acceptable lifetime.

INTENTIONALLY LEFT BLANK

8. INPUTS AND REFERENCES

8.1 DOCUMENTS CITED

Allegheny Ludlum. 1987. Technical Data Blue Sheet for Stainless Steels Chromium-Nickel-Molybdenum, Types 316, 316L, 317, and 317L. Pittsburgh, Pennsylvania: Allegheny Ludlum Corporation. TIC: 240370.

B&W Fuel Company 1991. *Final Design Package Babcock & Wilcox BR-100, 100 Ton Rail/Barge Spent Fuel Shipping Cask.* Volume 2. 51-1203400-00. DBABE0000-00272-1000-00012 REV 00. Lynchburg, Virginia: B&W Fuel Company. ACC: MOV.19960802.0081.

CRWMS M&O 1997a. *Waste Package Design Basis Events.* BBA000000-01717-0200-00037 REV 00. Las Vegas, Nevada: CRWMS M&O. ACC: MOL.19971006.0075.

CRWMS M&O 1997b. *Criticality Evaluation of Degraded Internal Configurations for the PWR AUCF WP Designs.* BBA000000-01717-0200-00056 REV 00. Las Vegas, Nevada: CRWMS M&O. ACC: MOL.19971231.0251.

CRWMS M&O 1997c. *PWR Assembly Source Terms for Waste Package Design.* BBA000000-01717-0200-00023 REV00. Las Vegas, Nevada: CRWMS M&O. ACC: MOL.19970708.0431.

CRWMS M&O 1997d. *Waste Container Cavity Size Determination.* BBAA00000-01717-0200-00026 REV 00. Las Vegas, Nevada: CRWMS M&O. ACC: MOL.19980106.0061.

CRWMS M&O 1998a. *Interface Control Document for Performance Assessment Operations and Waste Package Operations Functional and Organizational Interfaces Between the M&O Performance Assessment Operations, and the M&O Waste Package Operations.* B00000000-01717-8100-00012 REV 00. Las Vegas, Nevada: CRWMS M&O. ACC: MOL.19981117.0394.

CRWMS M&O 1998b. *Interface Control Document for the Waste Packages/Disposal Containers and the Surface Repository Facilities and Systems for Mechanical, Envelope and Functional Interfaces Between Surface Facilities Operations and Waste Package Operations.* B00000000-01717-8100-00021 REV 00. Las Vegas, Nevada: CRWMS M&O. ACC: MOL.19981229.0160.

CRWMS M&O 1998c. *Interface Control Document for Waste Packages and the Mined Geologic Disposal System Repository Subsurface Facilities and Systems for Mechanical and Envelope Interfaces Between Engineered Barrier System Operations and Waste Package Operations.* B00000000-01717-8100-00009 REV 00. Las Vegas, Nevada: CRWMS M&O. ACC: MOL.19980826.0139.

CRWMS M&O 1998d. *Summary Report of Commercial Reactor Criticality Data for Crystal River Unit 3.* B00000000-01717-5705-00060 REV 01. Las Vegas, Nevada: CRWMS M&O. ACC: MOL.19980728.0189.

CRWMS M&O 1998e. *Supplemental Criticality Evaluation for Degraded Internal Configurations of a 21 PWR Waste Package*. BBA000000-01717-0210-00022 REV 00. Las Vegas, Nevada: CRWMS M&O. ACC: MOL.19980918.0086.

CRWMS M&O 1998f. *Thermal Evaluation of a 21 PWR Waste Package in the Assembly Transfer System*. BBA000000-01717-0210-00013 REV 00. Las Vegas, Nevada: CRWMS M&O. ACC: MOL.19981012.0493.

CRWMS M&O 1999a. *Classification of the MGR Uncanistered Spent Nuclear Fuel Disposal Container System*. ANL-UDC-SE-000001 REV 00. Las Vegas, Nevada: CRWMS M&O. ACC: MOL.19990928.0216.

CRWMS M&O 1999b. *Waste Package Design Methodology and AMRs – 1101 2125 M1*. Activity Evaluation, September 23, 1999. Las Vegas, Nevada: CRWMS M&O. ACC: MOL.19991001.0148.

CRWMS M&O 1999c. *License Application Design Selection Feature Report: Additives and Fillers, Design Feature 19*. B00000000-01717-2200-00212 REV 01. Las Vegas, Nevada: CRWMS M&O. ACC: MOL.19990331.0159.

CRWMS M&O 1999d. *Rock Fall and Vertical Drop Calculations of Waste Packages*. BBA000000-01717-0210-00058 REV 01. Las Vegas, Nevada: CRWMS M&O. ACC: MOL.19990712.0123.

CRWMS M&O 1999e. *Preclosure Criticality Analysis Process Report*. B00000000-01717-5705-00132 REV 00. Las Vegas, Nevada: CRWMS M&O. ACC: MOL.19990930.0102.

CRWMS M&O 1999f. *PWR Source Term Generation and Evaluation*. BBAC00000-01717-0210-00010 REV 01. Las Vegas, Nevada: CRWMS M&O. ACC: MOL.20000113.0333.

CRWMS M&O 1999g. *BWR Source Term Generation and Evaluation*. BBAC00000-01717-0210-00006 REV 01. Las Vegas, Nevada: CRWMS M&O. ACC: MOL.20000113.0334.

CRWMS M&O 1999h. *Uncanistered Spent Nuclear Fuel Disposal Container System Description Document*. SDD-UDC-SE-000001 REV 00. Las Vegas, Nevada: CRWMS M&O. ACC: MOL.19991217.0512.

CRWMS M&O 1999i. *Interim Direction for Enhanced Design Alternative (EDA) II*. ECR-E1999-0046. Las Vegas, Nevada: CRWMS M&O. ACC: MOL.19990702.0067.

CRWMS M&O 1999j. *Transmittal of Site Recommendation Waste Streams*. Input Transmittal WP-SEV-99233.Ta. Las Vegas, Nevada: CRWMS M&O. ACC: MOL.19990824.0138.

CRWMS M&O 2000a. *Waste Package Design Methodology Report*. ANL-EBS-MD-000053 REV 00. Las Vegas, Nevada: CRWMS M&O. Submit to RPC URN-0294

CRWMS M&O 2000b. *Waste Package Design Sensitivity Report*. TDR-EBS-MD-000008 REV 00. Las Vegas, Nevada: CRWMS M&O. Submit to RPC URN-0295

CRWMS M&O 2000c. *Waste Package Tipover of 21-PWR.* CAL-UDC-ME-000005 REV 00. Las Vegas, Nevada: CRWMS M&O. ACC: MOL.20000424.0680.

CRWMS M&O 2000d. *Internal Pressurization Due to Fuel Rod Rupture in Waste Packages.* CAL-EBS-ME-000005 REV 00. Las Vegas, Nevada: CRWMS M&O. ACC: MOL.20000315.0671.

CRWMS M&O 2000e. *Pressurized System Missile Impact on Waste Packages.* CAL-EBS-ME-000006 REV 00. Las Vegas, Nevada: CRWMS M&O. ACC: MOL.20000420.0397.

CRWMS M&O 2000f. *21 PWR Waste Package Loading Curve Evaluation.* CAL-UDC-NU-000001 REV 00. Las Vegas, Nevada: CRWMS M&O. ACC: MOL.20000517.0451.

CRWMS M&O 2000g. *Dose Rate Calculation for the 21-PWR UCF Waste Package.* CAL-UDC-NU-000002 REV 00. Las Vegas, Nevada: CRWMS M&O. ACC: MOL.20000223.0507.

CRWMS M&O 2000h. *Dose Rate Calculation for the 44-BWR UCF Waste Package.* CAL-UDC-NU-000003 REV 00. Las Vegas, Nevada: CRWMS M&O. ACC: MOL.20000223.0506.

CRWMS M&O 2000i. *Residual Stress Minimization of Waste Packages from Induction Annealing.* CAL-UDC-ME-000004 REV 00. Las Vegas, Nevada: CRWMS M&O. ACC: MOL.20000221.0713.

CRWMS M&O 2000j. *Threshold Stress Level for Initiation of Stress Corrosion Cracking (SCC) in Alloy 22, Ti Gr7 and Ti Gr24.* Input Transmittal WP-WP-00031.T. Las Vegas, Nevada: CRWMS M&O. ACC: MOL.20000207.0123.

CRWMS M&O 2000k. *Thermal Modeling Parameters by Stratigraphic Unit.* Input Transmittal WP-NEP-99390.T. Las Vegas, Nevada: CRWMS M&O. ACC: MOL.20000125.0167.

CRWMS M&O 2000l. *Waste Package Degradation Process Model Report.* TDR-WIS-MD-000002 REV 00. Las Vegas, Nevada: CRWMS M&O. ACC: MOL.20000328.0322.

CRWMS M&O 2000m. *Drift Scale Thermal Analysis.* CAL-WIS-TH-000002 REV 00. Las Vegas, Nevada: CRWMS M&O. ACC: MOL.20000420.0401.

CRWMS M&O 2000n. *Thermal Evaluation of the 21 PWR Waste Package to Support SR.* CAL-WIS-TH-000005 REV 00. Las Vegas, Nevada: CRWMS M&O. ACC: Submit to RPC. URN-0298

CRWMS M&O 2000o. *Development Plan for Design Analyses for Uncanistered Commercial Fuel Waste Packages.* TDP-UDC-ME-000003 REV 01. Las Vegas, Nevada: CRWMS M&O. ACC: MOL.20000418.0815.

CRWMS M&O 2000p. *Puncture Drop of 44-BWR Waste Package.* CAL-UDC-ME-000006 REV 00. Las Vegas, Nevada: CRWMS M&O. Submit to RPC URN-0296

CRWMS M&O 2000q. *Waste Package Lifting Calculation.* CAL-EBS-ME-000007 REV 01. Las Vegas, Nevada: CRWMS M&O. Submit to RPC URN-0297

DOE (U.S. Department of Energy) 2000. *Quality Assurance Requirements and Description.* DOE/RW-0333P, Rev. 10. Washington, D.C.: U.S. Department of Energy, Office of Civilian Radioactive Waste Management. ACC: MOL.20000427.0422.

EPRI (Electric Power Research Institute) 1989. *Testing and Analyses of the TN-24P PWR Spent-Fuel Dry Storage Cask Loaded with Consolidated Fuel.* EPRI NP-6191. Palo Alto, California: Electric Power Research Institute. TIC: 207047.

Fairand, B. P. and Clauer, A. H. 1978. *Applications of Laser-Induced Stress Waves.* Columbus, Ohio: Battelle Columbus Laboratories. TIC: 247146.

Kugler, A. 1997. Sheet and Plate for Nuclear Engineering, Bohler Neutronit A976. Houston, Texas: Bohler Bleche GmbH. TIC: 246410.

Meriam, J.L. and Kraige, L.G. 1987. *Statics.* Volume 1 of *Engineering Mechanics.* 2nd Edition. Pages 441, 443. New York, New York: John Wiley and Sons. TIC: 241293.

Stroupe, E.P. 2000. "Approach to Implementing the Site Recommendation Design Baseline." Interoffice correspondence from E.P. Stroupe (CRWMS M&O) to Dr. D.R. Wilkins, January 26, 2000, LV.RSO.EPS.1/00-004, with attachment. ACC: MOL.20000214.0480.

YMP (Yucca Mountain Project) 1998. *Disposal Criticality Analysis Methodology Topical Report.* YMP/TR-004Q, Rev. 0. Las Vegas, Nevada: Yucca Mountain Site Characterization Office. ACC: MOL.19990210.0236.

8.2 CODES, STANDARDS, REGULATIONS, AND PROCEDURES

ANSI/ANS-8.1-1983. *Nuclear Criticality Safety in Operations with Fissionable Materials Outside Reactors.* La Grange Park, Illinois: American Nuclear Society. TIC: 231616.

ANSI/ANS-8.10-1983. *Criteria for Nuclear Criticality Safety Controls in Operations with Shielding and Confinement.* La Grange Park, Illinois: American Nuclear Society. TIC: 205015.

ANSI/ANS-8.15-1981. *Nuclear Criticality Control of Special Actinide Elements.* La Grange Park, Illinois: American Nuclear Society. TIC: 231624.

ANSI/ANS-8.17-1984. *Criticality Safety Criteria for the Handling, Storage, and Transportation of LWR Fuel Outside Reactors.* La Grange Park, Illinois: American Nuclear Society. TIC: 231625.

AP-2.16Q, Rev. 0, ICN 0. *Activity Evaluation.* Washington, D.C.: U.S. Department of Energy, Office of Civilian Radioactive Waste Management. ACC: MOL.20000207.0716.

AP-3.10Q, Rev. 2, ICN 1. *Analyses and Models.* Washington, D.C.: U.S. Department of Energy, Office of Civilian Radioactive Waste Management. ACC: MOL.20000512.0066.

AP-6.1Q, Rev. 4, ICN 0. *Controlled Documents.* Washington, D.C.: U.S. Department of Energy, Office of Civilian Radioactive Waste Management. ACC: MOL.20000104.0305.

AP-SV.1Q, Rev. 0, ICN 1. *Control of the Electronic Management of Data*. Washington, D.C.: U.S. Department of Energy, Office of Civilian Radioactive Waste Management. ACC: MOL.20000512.0068.

ASME (American Society of Mechanical Engineers) 1995. *1995 ASME Boiler and Pressure Vessel Code*. New York, New York: American Society of Mechanical Engineers. TIC: 245287.

ASTM B 575-97. 1998. *Standard Specification for Low-Carbon Nickel-Molybdenum-Chromium, Low-Carbon Nickel-Chromium-Molybdenum, Low-Carbon Nickel-Chromium-Molybdenum-Copper and Low-Carbon Nickel-Chromium-Molybdenum-Tungsten Alloy Plate, Sheet, and Strip*. West Conshohocken, Pennsylvania: American Society for Testing and Materials. TIC: 241816.

QAP-2-0, Rev. 05. *Conduct of Activities*. Las Vegas, Nevada: CRWMS M&O. ACC: MOL.19980826.0209.

QAP-2-3, Rev. 10. *Classification of Permanent Items*. Las Vegas, Nevada: CRWMS M&O. ACC: MOL.19990316.0006.

INTENTIONALLY LEFT BLANK

ATTACHMENTS

The attachments to this analysis are listed in Table 29.

Table 29. List of Attachments

Index	Contents	Number of Pages
I	SK-0175 REV 02, 21-PWR Waste Package Configuration for Site Recommendation	2
II	SK-0192 REV 00, 44-BWR Waste Package Configuration for Site Recommendation	2
III	SK-0191 REV 00, 21-PWR Waste Package Weld Configuration	1
IV	SK-0193 REV 00, 44-BWR Waste Package Assembly Weld Configuration	1

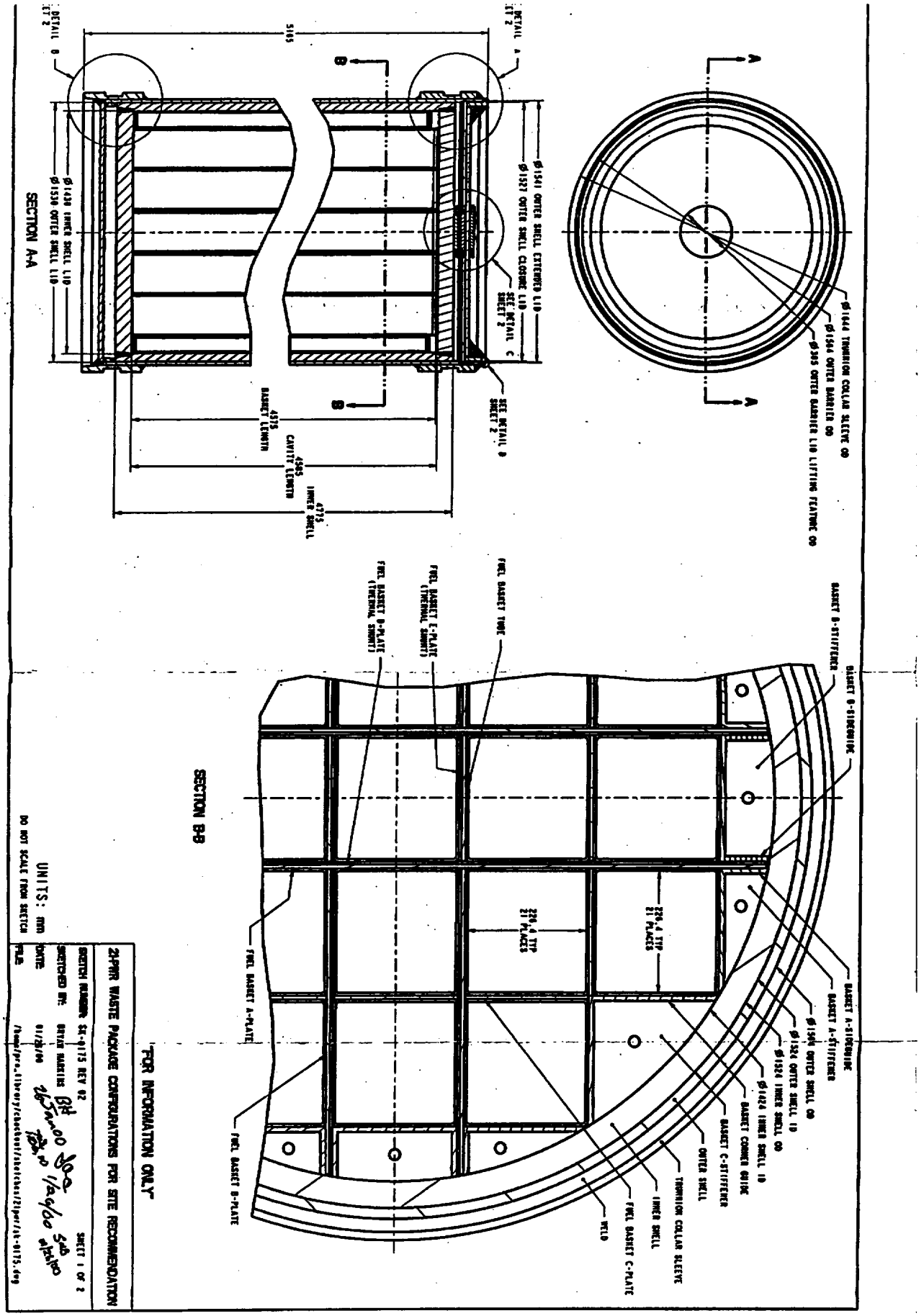
SECTION A-A
SECTION B-B
"FOR INFORMATION ONLY"
2-PWR WASTE PACKAGE CONFIGURATIONS FOR SITE RECOMMENDATION
UNITS: mm
DO NOT SCALE FROM SKETCH
SHEET 1 OF 2
Ø1644 TRUNNION COLLAR SLEEVE OD
Ø1564 OUTER BARRIER OD
Ø1505 OUTER BARRIER LID LIFTING FEATURE OD
Ø1541 OUTER SHELL EXTENDED LID
Ø1537 OUTER SHELL CLOSURE LID
Ø1430 INNER SHELL LID
Ø1530 OUTER SHELL LID
5165
4575 BASKET LENGTH
4585 CAVITY LENGTH
4575 INNER SHELL
BASKET B-STIFFENER
BASKET A-STIFFENER
Ø1504 OUTER SHELL OD
Ø1524 OUTER SHELL ID
Ø1424 INNER SHELL OD
Ø1424 INNER SHELL ID
BASKET CORNER GUIDE
BASKET C-STIFFENER
OUTER SHELL
TRUNNION COLLAR SLEEVE
INNER SHELL
FUEL BASKET C-PLATE
WELD
FUEL BASKET B-PLATE
FUEL BASKET A-PLATE
FUEL BASKET TUBE
FUEL BASKET E-PLATE (THERMAL SHUNTS)
FUEL BASKET D-PLATE (THERMAL SHUNTS)
229.4 TYP 21 PLACES
229.4 TYP 21 PLACES

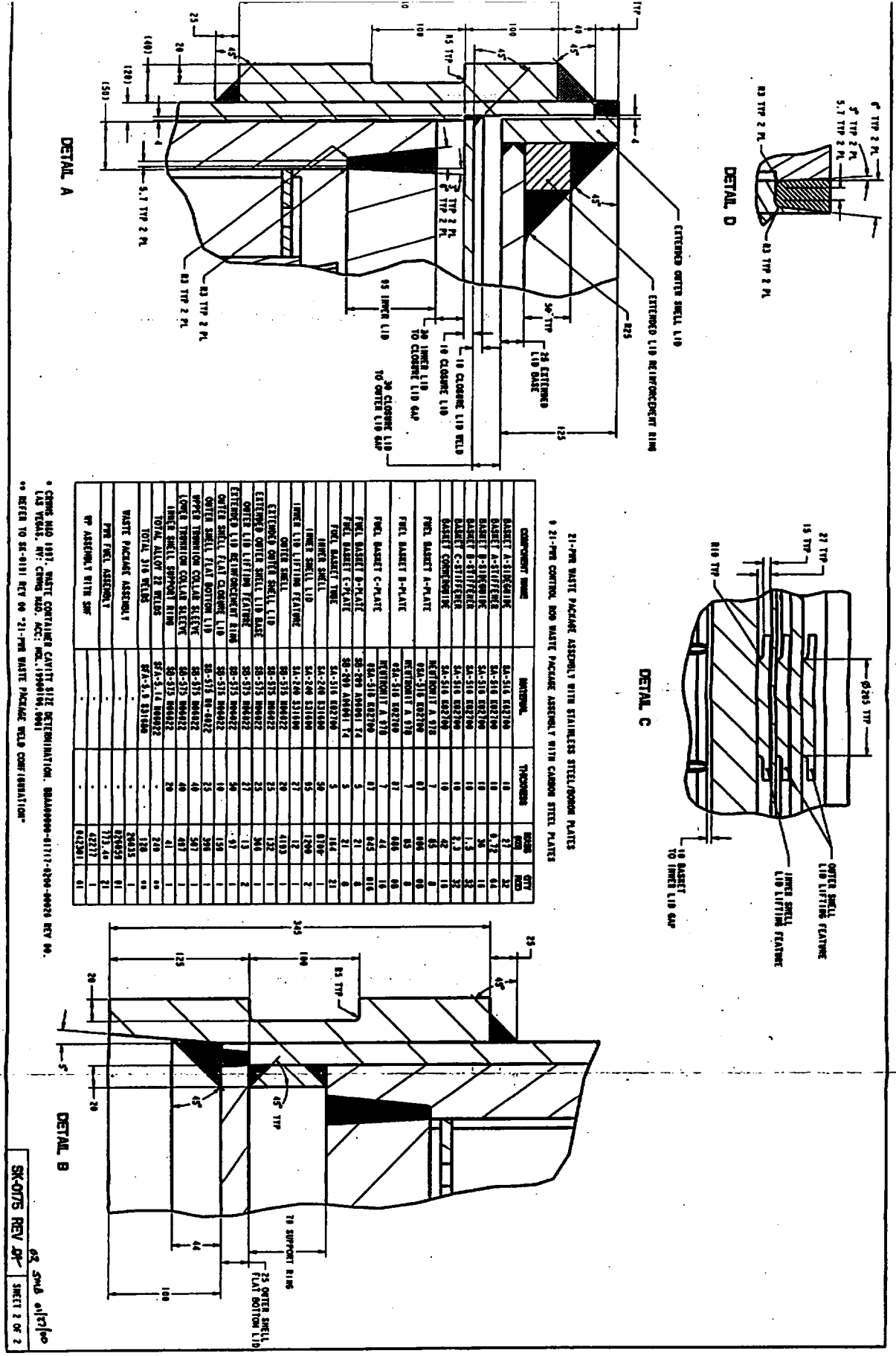

21-PWR WASTE PACKAGE ASSEMBLY WITH STAINLESS STEEL/BORON PLATES
& 21-PWR CONTROL ROD WASTE PACKAGE ASSEMBLY WITH CARBON STEEL PLATES

COMPONENT NAME	MATERIAL	THICKNESS	BORON (WT%)	QTY (NO)
BASKET A-SIDEPLATE	SA-516 GR270	10	2.7	32
BASKET A-STIFFENER	SA-516 GR270	10	0.37	64
BASKET B-SIDEPLATE	SA-516 GR270	10	56	11
BASKET B-STIFFENER	SA-516 GR270	10	1.3	32
BASKET C-STIFFENER	SA-516 GR270	10	2.3	32
BASKET CORNERPLATE	SA-516 GR270	10	42	16
FUEL BASKET A-PLATE	METCOMELT A 978	7	65	8
	954-316 GR270	07	096	08
FUEL BASKET B-PLATE	METCOMELT A 978	7	65	8
	954-316 GR270	07	080	08
FUEL BASKET C-PLATE	METCOMELT A 978	7	44	16
	954-316 GR270	07	045	016
FUEL BASKET D-PLATE	304-304 A49041 T4	5	21	8
FUEL BASKET E-PLATE	304-304 A49041 T4	5	21	8
FUEL BASKET TUBE	SA-516 GR270	5	164	21
INNER SHELL LID	SA-240 S31600	50	0.102	1
INNER LID LIFTING FEATURE	SA-240 S31600	55	1.200	2
OUTER SHELL	SB-575 N06022	27	12	1
EXTENDED OUTER SHELL LID	SB-575 N06022	20	4193	1
EXTENDED OUTER SHELL LID BASE	SB-575 N06022	25	132	1
OUTER LID LIFTING FEATURE	SB-575 N06022	25	360	1
EXTENDED LID REINFORCEMENT RING	SB-575 N06022	27	1.13	2
OUTER SHELL FLAT CLOSURE LID	SB-575 N06022	50	1.97	1
OUTER SHELL FLAT BOTTOM LID	SB-575 N06022	10	156	1
UPPER TRUNNION COLLAR SLEEVE	SB-575 N06022	25	396	1
LOWER TRUNNION COLLAR SLEEVE	SB-575 N06022	40	507	1
INNER SHELL SUPPORT RING	SB-575 N06022	40	481	1
TOTAL ALLOY 22 WELDS	SFA-5.14 N06022	20	41	1
TOTAL 316 WELDS	SFA-5.9 S31600	-	240	00
WASTE PACKAGE ASSEMBLY		-	128	00
PWR FUEL ASSEMBLY		-	24015	1
		-	026459	01
WP ASSEMBLY WITH SHF		-	773.40	21
		-	42277	1
		-	042301	01

* CERWIN MAO 1997: WASTE CONTAINER CAVITY SIZE DETERMINATION. BBAA00000-01717-0200-00020 REV 00. LAS VEGAS, NV: CRWMS M&O. ACC: MOL.19980106.0041
** REFER TO SK-0181 REV 00 "21-PWR WASTE PACKAGE WELD CONFIGURATION"

SK-0175 REV 00
SHEET 2 OF 2

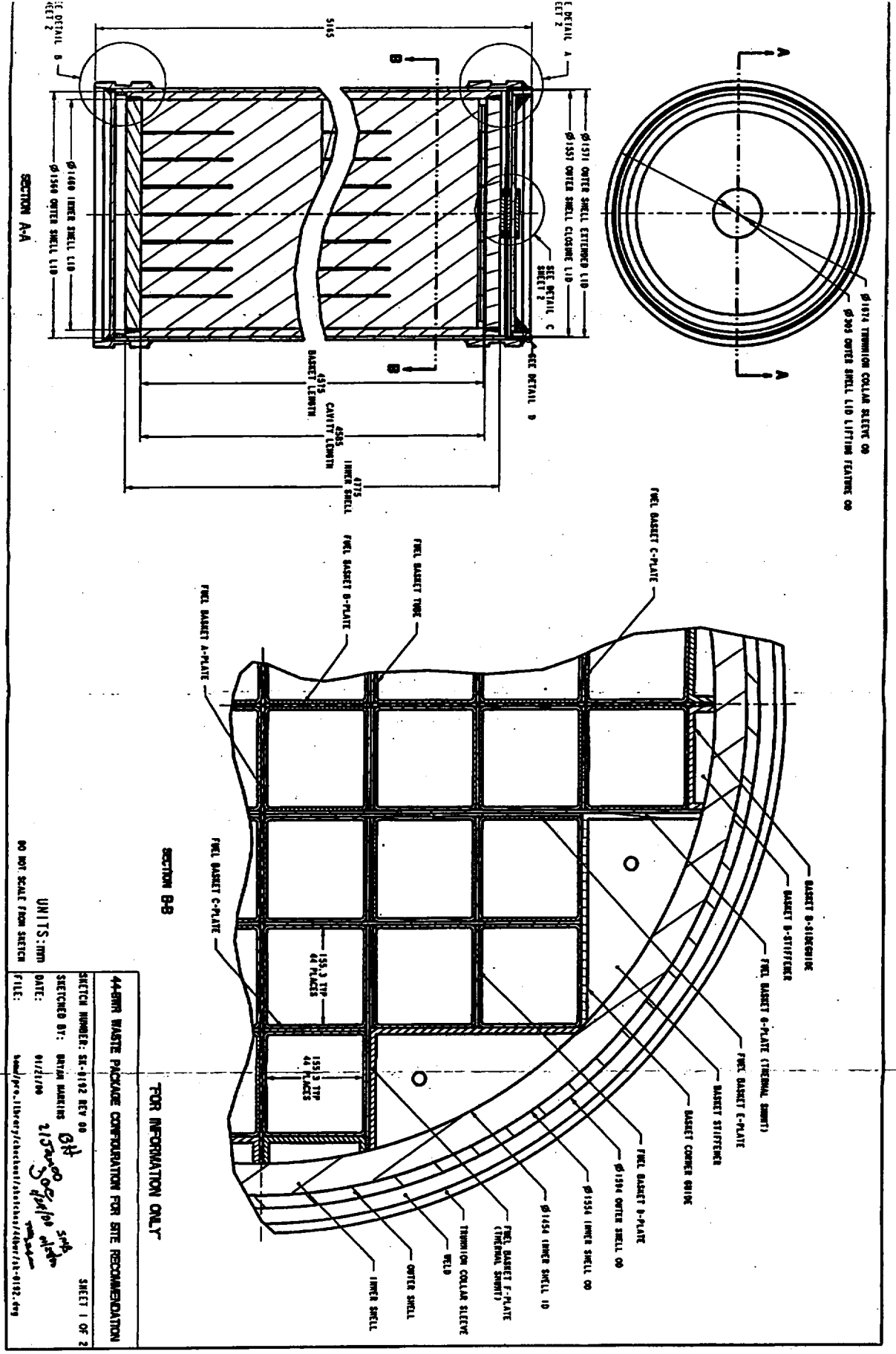
SECTION A-A
SECTION B-B
FOR INFORMATION ONLY
UNITS: mm
DO NOT SCALE FROM SKETCH
44-BWR WASTE PACKAGE CONFIGURATION FOR SITE RECOMMENDATION
SHEET 1 OF 2
SKETCH NUMBER: SK-0192 REV 00
SKETCHED BY: BRYAN MARKINS
DATE: 01/21/00
FILE: /home/pro.library/checkout/sketches/14bwr/sk-0192.dwg
Ø1674 TRUNNION COLLAR SLEEVE OD
Ø3093 OUTER SHELL LID LIFTING FEATURE OD
Ø1571 OUTER SHELL EXTENDED LID
Ø1557 OUTER SHELL CLOSURE LID
SEE DETAIL C SHEET 2
SEE DETAIL A SHEET 2
SEE DETAIL B SHEET 2
5165
4915 BASKET LENGTH
4585 CAVITY LENGTH
4775 INNER SHELL
Ø1400 INNER SHELL LID
Ø1560 OUTER SHELL LID
BASKET B-SUBGUIDE
BASKET B-STIFFENER
FUEL BASKET G-PLATE (THERMAL SHUNT)
BASKET STIFFENER
BASKET CORNER GUIDE
FUEL BASKET D-PLATE
Ø1594 OUTER SHELL OD
Ø1454 INNER SHELL OD
Ø1454 INNER SHELL ID
FUEL BASKET F-PLATE (THERMAL SHUNT)
TRUNNION COLLAR SLEEVE
WELD
OUTER SHELL
INNER SHELL
FUEL BASKET C-PLATE
FUEL BASKET TUBE
FUEL BASKET B-PLATE
FUEL BASKET A-PLATE
155.3 TYP 44 PLACES
155.3 TYP 44 PLACES

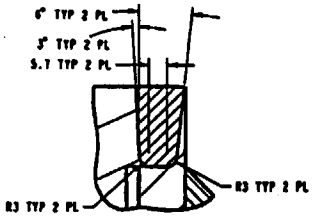

DETAIL D

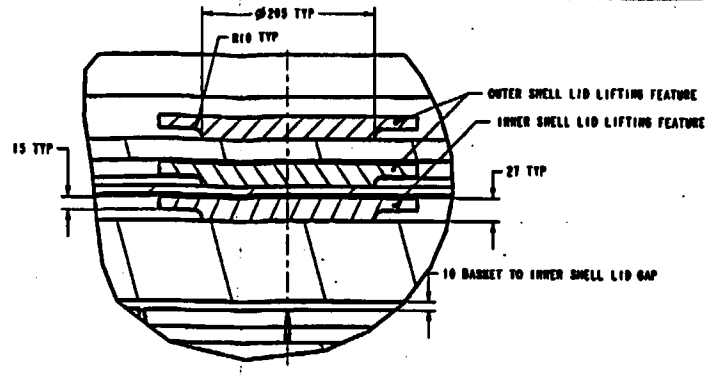

DETAIL C

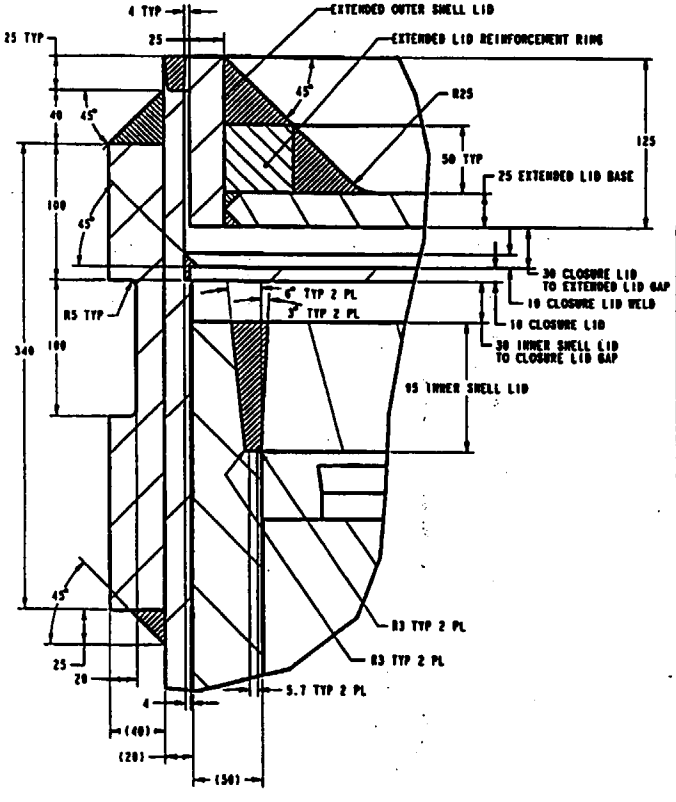

DETAIL A

COMPONENT NAME	MATERIAL	THICKNESS	MASS (KG)	QTY REQ
BASKET B-SIDEGUIDE	SA-516 K02700	10	19	32
BASKET B-STIFFENER	SA-516 K02700	10	0.31	64
BASKET CORNERGUIDE	SA-516 K02700	10	46	32
BASKET STIFFENER	SA-516 K02700	10	2.7	64
FUEL BASKET A-PLATE	NEUTRONIT A 978	5	63	4
FUEL BASKET B-PLATE	NEUTRONIT A 978	5	63	4
FUEL BASKET C-PLATE	NEUTRONIT A 978	5	15	16
FUEL BASKET D-PLATE	NEUTRONIT A 978	5	44	16
FUEL BASKET E-PLATE	NEUTRONIT A 978	5	44	16
FUEL BASKET F-PLATE	SB-209 A96061 T4	5	21	8
FUEL BASKET G-PLATE	SB-209 A96061 T4	5	21	8
FUEL BASKET TUBE	SA-516 K02700	5	113	44
INNER SHELL	SA-240 S31600	50	8886	1
INNER SHELL LID	SA-240 S31600	95	1251	2
INNER SHELL LID LIFTING FEATURE	SA-240 S31600	27	12	1
OUTER SHELL	SB-575 N06022	20	4275	1
EXTENDED OUTER SHELL LID	SB-575 N06022	25	135	1
EXTENDED OUTER SHELL LID BASE	SB-575 N06022	25	381	1
OUTER SHELL LID LIFTING FEATURE	SB-575 N06022	27	13	2
EXTENDED LID REINFORCEMENT RING	SB-575 N06022	50	99	1
OUTER SHELL FLAT CLOSURE LID	SB-575 N06022	10	165	1
OUTER SHELL FLAT BOTTOM LID	SB-575 N06022	25	412	1
UPPER TRUNNION COLLAR SLEEVE	SB-575 N06022	40	517	1
LOWER TRUNNION COLLAR SLEEVE	SB-575 N06022	40	507	1
INNER SHELL SUPPORT RING	SB-575 N06022	20	42	1
TOTAL ALLOY 22 WELDS	SFA-5.14 N06022	-	253	**
TOTAL 316 WELDS	SFA-5.9 S31600	-	131	**
WASTE PACKAGE ASSEMBLY	-	-	20060	1
BWR FUEL ASSEMBLY	-	-	320.4*	44
WASTE PACKAGE ASSEMBLY WITH SNF	-	-	42517	1

* CRWMS M&O 1997. WASTE CONTAINER CAVITY SIZE DETERMINATION. BBAA00000-01717-0200-00026 REV 00 LAS VEGAS, NV: CRWMS M&O. ACC: MOL.19980106.0061

** REFER TO SK-0103 REV 00 "SINGLE CRM 44-BWR WASTE PACKAGE ASSEMBLY WELD CONFIGURATION"

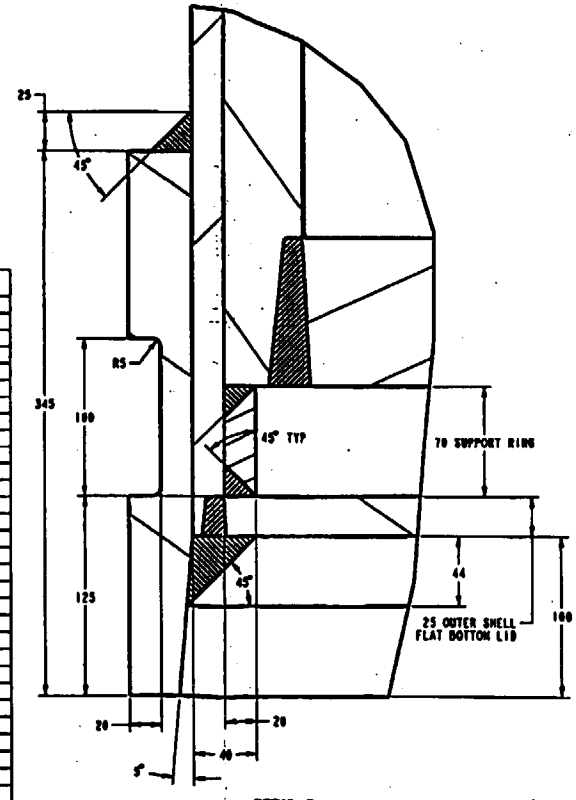

DETAIL B

SK-0102 REV 00 | SHEET 2 OF 2

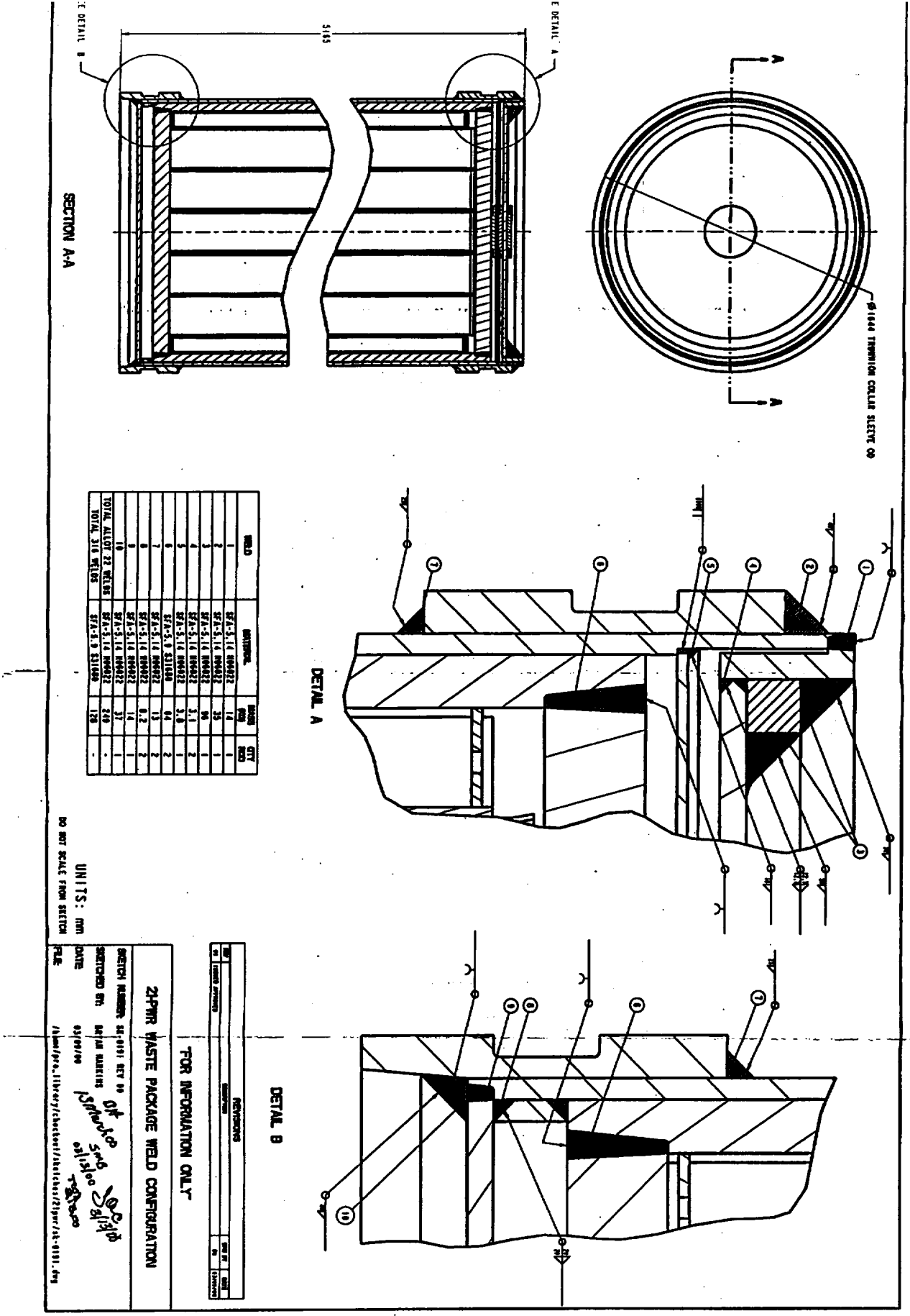
SECTION A-A
DETAIL A
DETAIL B
5155
Ø1644 TRUNNION COLLAR SLEEVE OD
WELD
MATERIAL
WEIGHT (KG)
QTY REQ
1 SFA-5.14 NM4022 14 1
2 SFA-5.14 NM4022 35 1
3 SFA-5.14 NM4022 96 1
4 SFA-5.14 NM4022 5.1 2
5 SFA-5.14 NM4022 3.8 1
6 SFA-5.9 S31600 64 2
7 SFA-5.14 NM4022 13 2
8 SFA-5.14 NM4022 0.2 2
9 SFA-5.14 NM4022 14 1
10 SFA-5.14 NM4022 37 1
TOTAL ALLOY 22 WELDS SFA-5.14 NM4022 240 -
TOTAL 316 WELDS SFA-5.9 S31600 128 -
DETAIL A
DETAIL B
UNITS: mm
DO NOT SCALE FROM SKETCH
REVISIONS
REV DESCRIPTION
REV BY DATE
"FOR INFORMATION ONLY"
21-PWR WASTE PACKAGE WELD CONFIGURATION
SKETCH NUMBER: SK-0001 REV 00
SKETCHED BY: DAVID MARKIN
DATE: 03/09/00
FILE: /home/pro_library/checkout/sketches/21pwr/sk-0001.dwg

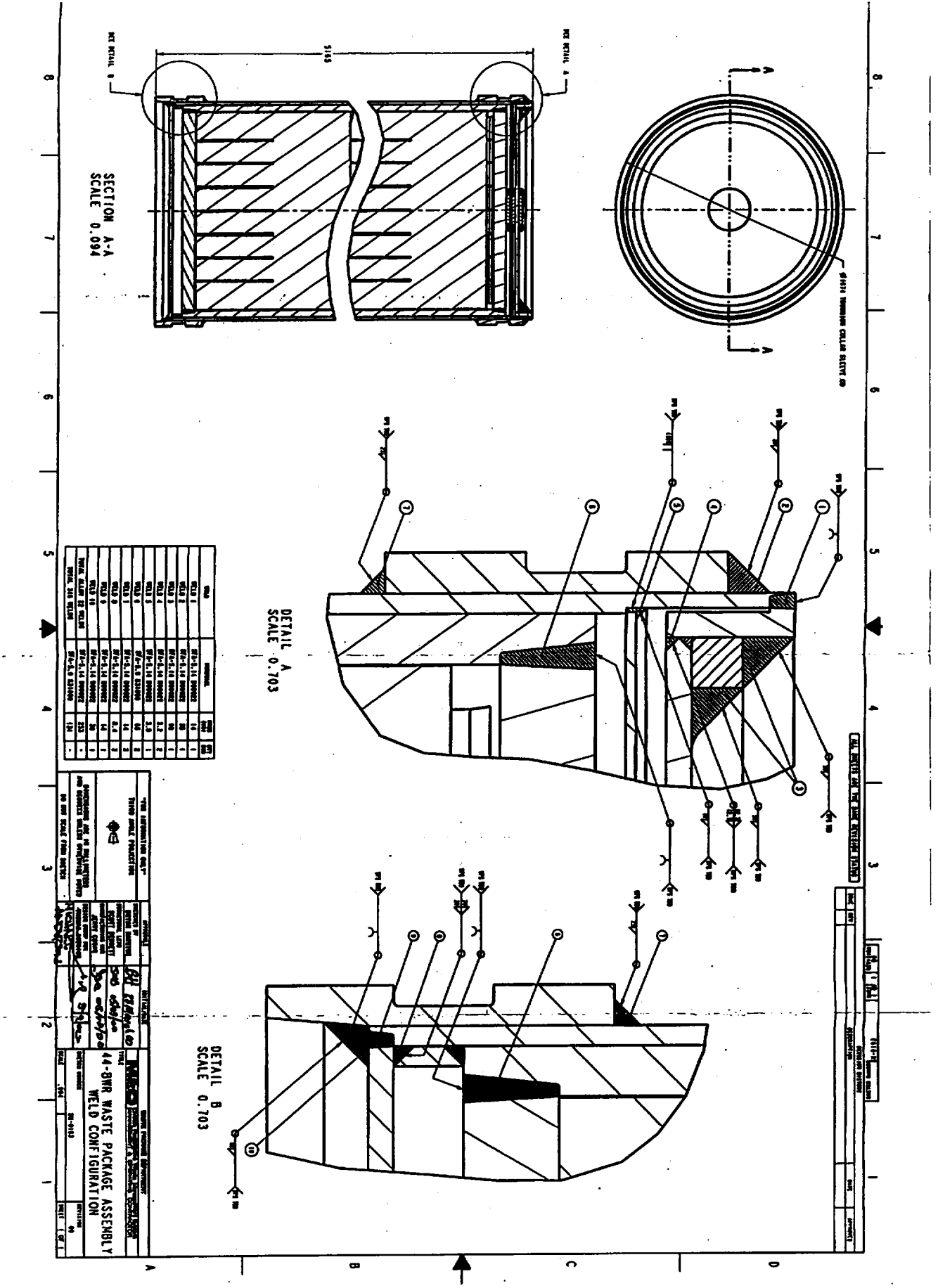
SECTION A-A
SCALE 0.094
DETAIL A
SCALE 0.703
DETAIL B
SCALE 0.703
44-BWR WASTE PACKAGE ASSEMBLY
WELD CONFIGURATION