EXHIBIT 25

K/16

EXHIBIT 25

CASE NO. 3-97-013

To: Kevin R. Tobin@Human Resources@MKF Cleveland
Cc:
Bcc:
From: Drew Edleman@Administration@MKF Admin
Subject: Group welding engineer
Date: Thursday, January 30, 1997 8:44:21 EST
Attach:
Certify: Y
Priority: Normal
Defer until:
Expires:
Forwarded by:

As we discussed, on 1/15/96, I informed Alain Artayet that he would no longer hold the position of Group Welding Engineer. This change was being made because of conflicts in working with Power Divison personnel over the past 9 to 12 months. The conflicting issues were discussed many times between Andy Walcutt and Power Division personnel. It had reached a point where the Power Division did not want him on any of their projects because they lacked confidence in his abilities and found him difficult to work with in helping to solve issues and problems.
I also addressed the issue of him just supporting the Industrial/Process Division, and indicated that that would not be a feasible solution. If he just supported the I/P Division and not total Group welding activities, that would make him, at best, 40-50% billable without reasonable justification for charging the balance to non-billable overhead. It just did not make sence to have two welding engineers, one for each division, and both partially billable. However, he will continue to provide support to the I/P Division only during a transisition period.

In discussions with Lou Pardi and Tom Zarges, it was agreed that we would try to find a position internally and that the company would cover his salary for three months no mater what the level of billability.

EXHIBIT 23

PAGE 1 OF 1 PAGE(S)

Case No. 3-97-013

EXHIBIT 26

K|17

CASE NO. 3-97-013

EXHIBIT 26

AFFIDAVIT

I am Drew T. Edleman and my title is "Director of Performance Systems". I was responsible for implementing the decision to transfer Mr. Artayet from the Group Quality Management Department to another position in the company.

Mr. Artayet's duties and responsibilities included preparing, qualifying and approving corporate procedures qualification records and welding procedure specifications. In addition, he provided welding assistance and technical support to the divisions and various projects in the field from the Cleveland office of Morrison Knudsen. He supported all divisions and projects reporting to the Engineering and Construction Group. His direct supervisor was Andy Walcutt, the Group Quality Director.

I was made aware in mid-December that the Power Division no longer desired Mr. Artayet's services because they did not have confidence in his abilities. The Power Division performs work to nuclear standards which entail complex and sophisticated welding techniques. The project personnel in this division had lost confidence in Mr. Artayet. The Executive Vice President of the Power Division, himself a welding engineer who had once worked in a similar role as Mr. Artayet with another large company, has substantial technical experience and expertise in this field.

A part of Mr. Artayet's duties involves providing welding consultation to the projects on a billable basis. When the Power Division indicated they would no longer be relying on his services in this respect there was insufficient work with respect to the other divisions to justify retaining him in his current position.

I discussed this matter with other individuals and found that this problem had been developing over a longer period of time. It appeared clear that Mr. Artayet lacked the inter-personal skills and judgment necessary to command the respect of the senior personnel in the field operations that he was employed to support.

I discussed my conclusions with our Group President to whom I report. The Group President discussed the matter with the Power Division Vice President who also reports to him and concurred in my decision to find another position for Mr. Artayet and to replace him with an experienced person from outside the company.

I, the undersigned swear that all the statements contained in the foregoing affidavit are true.

Drew T. Edleman

State of Ohio
County of Cuyahoga

Subscribed and sworn to before me this 20th day of March 1997 by Drew T. Edleman.

FRANCES E. BUFORD, Notary Public
State of Ohio
My Commission Expires Nov. 20, 1999

Frances E. Buford Notary

EXHIBIT 26

PAGE 1 OF 1 PAGE(S)

3-97-013

EXHIBIT 29

K|18

EXHIBIT 29

CASE NO. 3-97-013

AFFIDAVIT

I am Louis E. Pardi and my title is "Executive Vice President."

Attached is a copy of Quality Finding Report (QFR) C-96-022 which was generated as a result of the Management Audit performed in December 1996. It was this report that convinced me that we needed to strengthen our home office welding engineering function. Our ASME QA Program places the responsibility for assuring that all of our welding procedures are properly qualified, written, and implemented on our Group Welding Engineer. This audit clearly showed some deficiencies in our welding program. These deficiencies reflect in part directly on the capabilities and performance of the Group Welding Engineer. Since these deficiencies were unacceptable to MK, we decided to make a change in the Group Welding Engineer position.

It is important to note that all of the findings reported in C-96-022 have been closed out. Procedural discrepancies referenced in this QFR did not impact the quality of work at Point Beach nor was any rework to the plant's systems or components required to close the finding of the QFR.

I, the undersigned swear that all the statements contained in the foregoing affidavit are true.

Louis E. Pardi

State of Ohio
County of Cuyahoga
Subscribed and sworn to before me this 20th day of March 1997 by Louis E. Pardi.

Notary FRANCES E. BUFORD, Notary Public
State of Ohio
My Commission Expires Nov. 20, 1999

EXHIBIT 24
PAGE 1 OF 1 PAGE(S)

Docket No. 50-77-01B

EXHIBIT 30

K|19

EXHIBIT 30

CASE NO. 3-97-013

DATE: January 28, 1997

TO: Tom Zarges

FROM: Andy Walcutt

SUBJECT: 1996 Management Review

As requested, we have evaluated the 1996 Management Review that was conducted on December 30 & 31, 1996. This review was conducted to independently evaluate the Corporate QA Programs and confirm that the Group Quality Director (GQD) is implementing his assigned responsibilities.

Four Findings and two Observations were identified as a result of this Review. They have been addressed as follows:

Finding 1
No Training Matrix available for a Corporate ASME Manual Change dated 20-Aug-96

QFR-02 was issued to address this Finding. The Program requires that when a Manual is changed, that the GQD review the changes and identify those requiring training. The Quality Document Management System has a preset Training Matrix that generates "Read Records" along with the Transmittals that send the changes out to "Controlled" Manual holders. The Quality Department Document Management System did cause the required training to be done.

The step that was missed was the printing out of the Training Matrix and the GQD's review and approval, or change, of the Matrix. The Document Control Clerk position, the position that generates the printout, was unfilled at the time and the step was missed. This Training Matrix was issued during the Management Review.

Findings 2, 3 and 4
Point Beach WPS exceeds heat input limits established by the Corporate WPS, no letter of delegation and no GQD review and approval of WPS GTM 1.1-3PB

QFR-01 was issued to address these Findings. The Corporate Quality Program requires that the GQD review and approve all Corporate WP's/PQR's. WPS GTM 1.1-3PB was qualified and used at Point Beach. The WPS/PQR was generated on site but the required documentation had not been transmitted to the GQD for approval at the time of the Management Review. After noting additional errors with the WPS, the Assessor selected Point Beach generated WPS GT-SM/3.3-2PB at random. Errors were noted in this WPS.

Form 232-A 06/92

EXHIBIT 3-2
PAGE 1 OF 2 PAGE(S)

In responding to QFR-01, all Point Beach generated ASME related WPS's were reviewed. Eleven out of the eighteen WPS's contained one or more errors. Causes of these errors were characterized as being administrative, interpretation differences and editorial. Evaluation has determined that there are no open hardware affecting issues.

It is my opinion that these errors could have been prevented by effective communication between the Group and Project Welding Engineers (GWE & PWE), PWE knowledge of Corporate QA Program requirements when performing Corporate functions and, in the absence of specific Code words, acceptance by the PWE of GWE Code interpretations.

Corrective actions being taken to resolve this QFR involve replacement of the GWE and revisions to Corporate QAI's to clarify the PQR and WPS generation process.

Observations

The first Observation is a specific example of an editorial error. This error was addressed as a part of QFR-01.

The second observation involved the Certification of a project assigned Lead Assessor who was performing supplier qualification audits to add suppliers to the Corporate Approved Supplier's List. Although Mr. Beckley's Qualifications were on file, they did not include a history of assessments performed. It was explained that this history is compiled every January. Since Mr. Beckley was certified in 1996, no history was on file. Mr. Beckley's 96 Assessment History and the yearly Personnel Performance Review have been generated and both are now on file.

I believe that we have responded to the issues raised by the 1996 Management Review. Unless otherwise directed, I consider this process to be complete.

cc: L. E. Pardi
M.D. Cepkauskas

END

EXHIBIT 32
PAGE 1 OF 2 PAGE(S)
CASE NO. 3-97-013

EXHIBIT 31

K|20

EXHIBIT 31

CASE NO. 3-97-013

ULMER & BERNE LLP
ATTORNEYS AT LAW

Internet Address
http://www.ulmer.com/
E-mail Address
sbell@ulmer.com

Bond Court Building
1300 East Ninth Street, Suite 900
Cleveland, Ohio 44114-1583
Fax (216) 621-7488

Columbus Office
88 East Broad Street, Suite 1980
Columbus, Ohio 43215-3506
Fax (614) 228-8561
Telephone (614) 228-8400

(216) 621-8400

STEVEN D. BELL
Direct Dial (216) 902-8831

October 31, 1997

VIA FACSIMILE TRANSMISSION

Keith A. Ashmus, Esq.
Thompson, Hine and Flory
3900 Society Center
127 Public Square
Cleveland, OH 44114

Re: *Alain Artayet v. Morrison Knudsen Corporation*
Case No. 97-ERA-34

Dear Mr. Ashmus:

I assume that you have now received a copy of the Recommended Decision and Order ("RD&O") issued by the Department of Labor on October 28, 1997. This letter is intended to bring to your attention several urgent matters related to the issuance of the RD&O.

At the time Mr. Artayet was unlawfully transferred to the DuPont Washington Works in Parkersburg, West Virginia, he was promised that his assignment there would last until at least February, 1998. As you are aware from my prior correspondence to you, Mr. Artayet was "laid-off" from his job from the DuPont Washington Works project effective September 30, 1997.

It is our opinion that but for the unlawful transfer of Mr. Artayet to the DuPont Washington Works job, he would not have been subject to the purported "lay-off", and that he would not have suffered any interruption in pay or benefits. Instead, as a direct and proximate result of the decision made by Morrison Knudsen Corporation to transfer Mr. Artayet to the DuPont Washington Works job, Mr. Artayet was in a position to be "laid-off", and has now suffered economic damages as a consequence.

ULMER & BERNE LLP

Mr. Artayet has applied for unemployment benefits, and he has been told that he should expect to receive his first unemployment check later today. Because he has not yet received an unemployment check, he is uncertain as to the exact amount which he will be receiving, but inasmuch as unemployment benefits are not counted as "mitigating wages" for purposes of determining a backpay award, we consider the amount of Mr. Artayet's unemployment checks to be irrelevant to the following discussion.

Mr. Artayet is ready, willing and able to report for work on Monday, November 3, 1997. If Morrison Knudsen Corporation does not agree to immediately reinstate Mr. Artayet to his position of Corporate Welding Engineer in the Cleveland office with all of the benefits and privileges of that position which were previously enjoyed by Mr. Artayet, we will be forced to ask the Department of Labor to award backpay to Mr. Artayet for the period beginning September 30, 1997 (the date he was "laid-off" from the DuPont Washington Works job) through the date when he returns to work under the terms of a Preliminary Order which will eventually be issued by the Department of Labor. If Morrison Knudsen Corporation acts prudently to now voluntarily reinstate Mr. Artayet to his former position, it would save both parties -- and the Department of Labor -- a tremendous amount of expensive effort.

It is Mr. Artayet's further understanding that certain important benefits of his employment -- including his life and health insurance benefits -- will expire later today. Even if Morrison Knudsen Corporation declines to voluntarily reinstate Mr. Artayet to his position prior to the issuance of a Preliminary Order from the Department of Labor, we believe it would be unnecessarily reckless under the circumstances for Morrison Knudsen Corporation to discontinue any of the benefits to which Mr. Artayet has been entitled in the past, and to which he will be entitled at such time as he returns to his position as Corporate Welding Engineer. We therefore request that Morrison Knudsen Corporation confirm in writing that Mr. Artayet's health and life insurance benefits will be continued from this date through the date on which Mr. Artayet resumes his employment as Corporate Welding Engineer. We shall take such action as is appropriate to obtain this relief for Mr. Artayet if we do not receive a satisfactory response from Morrison Knudsen Corporation.

ULMER & BERNE LLP

Keith A. Ashmus, Esq.
October 31, 1997
Page 3

Morrison Knudsen Corporation holds in its hands the unilateral ability to avoid unnecessary and expensive future litigation. Given the fact that today is the last business day of the month of October, and further given the fact that certain benefits of importance to Mr. Artayet and his family are scheduled to expire later today, we would appreciate your immediate response to this letter.

Very truly yours,

Steven D. Bell

145:kmh
cc: The Honorable Daniel L. Leland (by fax)
Joe Ulie, Nuclear Regulatory Commission, Region V (by fax)
Richard R. Edmister, Esq. (by fax)

EXHIBIT 31

CASE NO. 3-97-013

PAGE 3 OF 4 PAGE(S)

ULMER & BERNE LLP
ATTORNEYS AT LAW

Internet Address
http://www.ulmer.com/

Bond Court Building
1300 East Ninth Street, Suite 900
Cleveland, Ohio 44114-1583
Fax (216) 621-7488

Columbus Office
88 East Broad Street, Suite 1980
Columbus, Ohio 43215-3506
Fax (614) 228-8561
Telephone (614) 228-8400

(216) 621-8400

TELECOPIER TRANSMITTAL

DATE: 10/31/97 FILE NUMBER: 22729-0

Number of Pages (including cover sheet): 4

To: JOE UWIF

Firm Name: U.S. NUCLEAR REG. COMM., REG III

Telecopy #: 630/515-1438

Telephone No. To Confirm Receipt: 630/829-9500

AN ORIGINAL OF THIS FAX ___ WILL BE MAILED ___ WILL NOT BE MAILED

From: STEVEN D. BELL
Time of Transmission: _____ AM _____ PM Sent By: _____

- [ ] See attached
- [x] For your information
- [ ] For your file
- [ ] As you requested
- [ ] Please sign
- [ ] Please complete
- [ ] Please telephone upon receipt
- [ ] Please read and advise
- [ ] Please acknowledge receipt
- [ ] Please handle
- [ ] Please comment
- [x] Please read

MESSAGE: _____

Should you have any problems with receipt of this transmission, or if the stated number of pages does not follow, please contact us at (216) 621-8400, Ext. 8893.

UNLESS OTHERWISE INDICATED, THE INFORMATION IN THIS TRANSMITTAL IS CONFIDENTIAL AND INTENDED ONLY FOR THE RECIPIENT LISTED ABOVE. IF YOU ARE NEITHER THE INTENDED RECIPIENT NOR A PERSON RESPONSIBLE FOR DELIVERING THIS TRANSMITTAL TO THE INTENDED RECIPIENT, YOU ARE HEREBY NOTIFIED THAT ANY DISTRIBUTION OR COPYING OF THIS TRANSMITTAL IS PROHIBITED. IF YOU RECEIVED THIS TRANSMITTAL IN ERROR, PLEASE IMMEDIATELY NOTIFY US AND RETURN THE TRANSMITTAL TO US AT OUR EXPENSE.

G:\WPDOC\HORKA\DATA\571414 C1

EXHIBIT 33

K/21

QUALITY PROGRAM RESOLUTION

SGT LTD.

The Member's Committee hereby resolves that:

SGT will adopt the Morrison Knudsen (MK) 10 CFR 50 Appendix B and ASME Section III Quality Assurance Programs as the SGT's Corporate Quality programs. MK will provide SGT with the Corporate support necessary to implement Corporate Quality programs for the SGT. As a parent company of SGT, Morrison Knudsen will perform the ASME code stamped work associated with the replacement of steam generators or any other code items.

Should it become necessary, the MK Corporate Quality Programs, personnel and supporting documentation, including the MK Corporate Nondestructive Examination Written Practice and Welding Procedures/Procedure Qualification Records, including the resources necessary to implement these programs, will be seconded to SGT.

Approved E B Abrams
E. B. Abrams

Approved L E Pardi
L. E. Pardi

c:\wp6docs\lep\quality.sgt

EXHIBIT 33

PAGE 1 OF 1 PAGE(S)

DOC NO 3-07-013

EXHIBIT 34

K/22

9.0 WELDING AND HEAT TREATING

9.1 Scope

This Section addresses the control of welding and heat treatment including procedure and performance qualification, receipt, storage, oven control, issuance of consumables, material testing, fabrication, inspection, and repair.

9.2 Welding Procedure Qualifications

9.2.1 It is the responsibility of the Group Welding Engineer to direct preparation and qualification of Welding Procedure Specifications (WPS) (Exhibit 23) under the provisions of ASME Section III and Section IX for the class of construction involved.

9.2.2 Test coupons for qualifying the WPS are welded under the supervision of the Group Welding Engineer GWE) or personnel appointed by the GWE. The actual welding parameters within a narrow range used for the welding of the test coupon are recorded on a Procedure Qualification Record (PQR) (Exhibit 24).

9.2.3 Testing of specimens is performed by MK or an independent test laboratory selected by the Group Welding Engineer from the ASL.

9.2.4 Test results are recorded on the Procedure Qualification Record (PQR) and certified by the Group Welding Engineer.

9.2.5 Utilizing the certified PQR, and supporting WPS(s), the Project Welding Engineer develops a project specific WPS. The Project Quality Manager makes available copies of the project specific WPS and supporting PQR's to the ANI.

9.2.6 Welding Procedures previously qualified by Morrison Knudsen Corporation, MK-Ferguson Company, or MK-Ferguson Group, may be utilized by MK provided they are reviewed and accepted by the Group Welding Engineer prior to use in production. This review shall be documented by signature and date on a cover sheet attached to the MK welding procedure.

9.2.7 When there is a specific reason to question the welding procedure, the ANI may require requalification as a requirement for the procedure to be used on work subject to inspection by the ANI.

EXHIBIT 31

PAGE 1 OF 127 PAGE(S)

9.3 Performance Qualification

9.3.1 Welders and welding operators are qualified in accordance with ASME Section III and Section IX, and with one or more qualified Welding Procedure Specifications (WPS) by the Project Welding Engineer.

9.3.2 When a welder or welding operator has not welded with a process during a period of six (6) months, all of that individual's qualifications shall expire for this particular process. The Project Welding Engineer is responsible for maintaining a Welder Status Report (WSR) that shows the current status of all welder and welding operator qualifications. WDC's are utilized by the PWE for maintenance of the WSR. A copy of the WSR is made available to the ANI.

9.3.3 A unique test number is assigned to each qualification test for welders and welding operators. This unique test number is described on the Record of Welder or Welding Operator Performance Qualification Test (WPQ, Exhibit 26), which is prepared by the Project Welding Engineer, and identifies the essential variables for each test. The PWE signs the WPQ to certify that the Welder has passed the Qualification test.

9.3.4 The essential variables and the test results obtained by each welder or welding operator are recorded on the WSR which is prepared by the Project Welding Engineer.

9.3.5 The Project Welding Engineer is responsible for assigning each successful welder and welding operator a unique ID Number which is used to identify the work of that welder or welding operator. The Project Welding Engineer maintains records of stencil assignment. When a welder or welding operator leaves the company, the ID Number is not reissued unless that welder or welding operator returns.

9.3.6 The Project Quality Manager or the ANI may require requalification of welders or welding operators if their ability to meet the requirements of ASME Section III, Section IX, or this Manual is questionable.

9.3.7 The Project Welding Engineer shall provide copies of welder and welding operator performance qualification records (WPQ's) to the PQM. The PQM makes the records of welder and welding operator performance qualifications (WPQ's) available to the ANI.

9.4 Procurement and Receipt of Welding Materials

Welding materials include consumables (such as electrodes, spool/coil wire, and consumable inserts) and non-consumables (such as backing rings and tungsten

electrodes). All welding materials are requisitioned, purchased, and received in accordance with Sections 5.0 and 6.0.

9.5 **Storage**

The Warehouse Manager is responsible for the control, issuance, and storage of welding materials. Welding materials are stored, until needed, indoors and under controlled access conditions in a storage area. The storage area is locked except when material is being received or requisitioned.

9.6 **Holding Ovens**

9.6.1 Low Hydrogen and low/high alloy covered electrodes are received in hermetically sealed containers. When the containers are opened, the electrodes are either immediately issued for use in portable storage ovens or placed in stationary storage ovens. Stationary storage oven temperatures are held within a range recommended by the electrode manufacturer. Loss of storage oven temperature, such as caused by power interruption, is not sufficient cause for destroying electrodes unless interruptions exceed 12 hours in an unopened oven, in which case the contents shall be discarded. Baking of electrodes is not permitted.

9.6.2 Welding consumables placed in stationary storage ovens are identified in each section of the oven or placed inside the ovens in metal cans which reflect proper identification markings.

9.6.3 Temperatures of stationary storage ovens are read and recorded each work day on the Weld Rod Oven Temperature Monitor Sheet (Exhibit 27) by the Weld Rod Attendant. Oven thermometers are calibrated per the requirements of Section 11.0.

9.7 **Issuance of Welding Consumables**

9.7.1 The Project Welding Engineer requisitions welding materials from the warehouse storage area by using a Weld Filler Metal Control Slip (WFMCS) (Exhibit 28). The Material I.D. number(s) of the welding material(s) being issued are listed on the WFMCS.

9.7.2 Welding materials are transferred from the warehouse storage area to a controlled distribution point in the fabrication/installation area. While in the controlled distribution point, welding materials shall remain traceable to their applicable material ID numbers. The controlled distribution point shall remain locked except when closely supervised by the Weld Rod Attendant.

EXHIBIT 34

PAGE 3 OF 12 /PAGE(S)

9.7.3 During work package preparation, the Project Welding Engineer enters the Material Code number on the WDC/WRDC (Paragraph 7.3.1 and 9.11.2).

9.7.4 Using the WDC and the WSR, the Responsible Superintendent prepares a Weld Filler Metal Control Slip (WFMCS). Only the welding consumables and backing rings identified on the WDC by Material Code number are listed on the WFMCS. Issuing of welding materials to Welders and Welding Operators is made using the WFMCS. At time of issue, the Weld Rod Attendant marks the material number on the WFMCS to provide the required traceability through a complete Material ID number.

9.7.5 The QC Inspector monitors withdrawal of consumables from ovens by means of the WFMCS.

9.7.6 Transfer of welding consumables from one welder to another is prohibited. Spools/coil of weld wire may be transferred, provided the Responsible Superintendent verifies the ID numbers of the wire being transferred and records the new Welding Operator's name on the WFMCS.

9.7.7 It is the responsibility of the QC Inspector to use the WFMCS in the field to identify the welder(s) and welding materials, to check that the welder(s) were issued the material, and to record the Welder's and Welding Operator's symbol and welding material ID numbers on the WDC.

9.7.8 Welding materials are controlled with written procedures approved in accordance with Section 3.0.

9.8 **Code Welding Material Qualification Testing**

When Code welding consumables must be subjected to additional testing by MK to meet Code or Client specification requirements, the Project Welding Engineer prepares the necessary test coupons and has the additional tests performed in accordance with Code requirements. The results of the additional testing are reported on a CMTR verified by the Project Welding Engineer. The CMTR is included in the final records. The ANI is afforded the opportunity to witness the additional testing.

9.9 **Fabrication/Installation Welding**

9.9.1 All welding is performed by qualified welders and welding operators in accordance with one of the qualified Welding Procedure Specifications (WPS's). WPS's are referenced on the applicable WDC. In addition, WPS's shall be made available in

EXHIBIT

an area adjacent to the work, and in project files for reference by the welders, welding operators, and the ANI.

9.9.2 Utilizing the WSR, the Responsible Superintendent assigns welders and welding operators. It is the Responsible Superintendent's responsibility to assign only those welders and welding operators who have been qualified under the provisions of ASME Section IX and the pertinent article of ASME Section III (depending on the class of construction involved), and whose qualifications are current, as defined by ASME Section IX.

9.9.3 A record of the welders and welding operators used in making each of the weld joints shall be maintained on the WDC by the QC Inspector.

9.10 **Welding Inspection**

The QC Inspector performs the inspections required by the WDC and, if acceptable, documents approval on the WDC and the Daily Inspection Report.

9.11 **Weld Repairs**

9.11.1 Inprocess repairs by welding which are part of the original weld may be made using an approved repair procedure. Repair by welding may be documented on the original WDC, or on a Weld Repair Data Card (WRDC) (Exhibit 22) if more room is required to describe the repair. The WRDC is prepared, reviewed, approved, and utilized in the same manner as described in Paragraph 7.3 for the WDC. Such repairs are not considered "nonconformances".

9.11.2 All other conditions requiring weld repair are considered nonconformances and are controlled as described in Section 8.0. Use of a WRDC is required.

9.12 **Postweld Heat Treatment**

9.12.1 PWHT performed by MK or its subcontractors is performed in accordance with approved written procedures. The Project Welding Engineer verifies the cumulative PWHT holding time at temperature will not be exceeded, and the PWE also describes the specific heat treatment requirements on the Heat Treatment Record (HTR). The Project Welding Engineer also documents the PWHT history which includes the qualified holding time and temperature, and the cumulative holding time at temperature on the Heat Treatment Record (HTR) (Exhibit 30).

9.12.2 A PWHT subcontractor must be an approved supplier (See Section 5.0). The approved MK heat treatment procedure shall be specified on the PO by number

EXHIBIT 30

PAGE 5 OF 127 PAGE(S)

and revision. MK retains responsibility for heat treatment which is performed by a subcontractor.

9.12.3 PWHT activities performed shall be verified by the QC Inspector in accordance with written procedures approved as described in Section 3.0. Verification includes, as a minimum:

a. proper cleaning of the PWHT area prior to the PWHT operation;
b. calibration of temperature recording instruments;
c. heating rate, soak (holding) time and temperature, and cooling rate;
d. review of time and temperature recordings; and,
e. visual examination after PWHT operations.

9.12.4 A time and temperature recording of each PWHT is made by the Responsible Superintendent, which shows the item(s) PWHT, the procedure used (including the revision), the date of the PWHT, operator's name, thermocouple and recorder identification, and method of placement for thermocouples and where attached to the item.

9.12.5 The PWHT is verified by a calibrated time-temperature recorder in conjunction with thermocouples which are attached directly to the item or item in direct contact with the item. Thermocouples and thermocouple material are certified and traceable in accordance with ANSI MC 96.1.

9.12.6 Time-temperature recordings for PWHT, performed by MK or its subcontractor, are reviewed and accepted/rejected for MK by the Project Welding Engineer.

9.12.7 The QA Supervisor, at final documentation review, reviews the heat treatment records against the applicable Welding Procedure Specification and CMTR to assure that the cumulative PWHT holding time at temperature has not been exceeded.

9.12.8 Heat treatment records become a part of final documentation and are made available by the Project Quality Manager to the ANI.

9.13 <u>Bending and Forming</u>

9.13.1 The Construction Engineering Manager specifies the required controls for bending and forming operations in procedures which are developed and approved in accordance with Section 3.0.

EXHIBIT 34
PAGE 6 OF 126 PAGE(S)

9.13.2 When the Code requires the qualification of forming procedures, the Construction Engineering Manager is responsible for assuring the required qualification tests are conducted in accordance with the Code and documented in a qualification report. The report is reviewed and approved by the Construction Engineering Manager and responsible QC Supervisor.

9.13.3 Using the results of the forming procedure qualification, the Construction Engineering Manager specifies the material requirements. The material is so specified in the Purchase Requisition (see Paragraph 5.3) such that material specification requirements are met after forming.

9.13.4 Prior to listing the forming procedure in a Work Package (see Paragraph 7.2), the Construction Engineering Manager assures that the procedure has been qualified and the material assigned will meet Code requirements after forming.

9.13.5 Records of the forming procedure qualifications are maintained by the responsible QA Supervisor.

E9

EXHIBIT 54

PAGE 7 OF 127 PAGE(S)

9.0 WELDING AND HEAT TREATING

9.1 Scope

This Section addresses the control of welding and heat treatment including procedure and performance qualification, receipt, storage, oven control, issuance of consumables, material testing, fabrication, inspection, and repair.

9.2 Welding Procedure Qualifications

9.2.1 It is the responsibility of the Group Welding Engineer to direct preparation and qualification of Welding Procedure Specifications (WPS) (Exhibit 23) under the provisions of ASME Section III and Section IX for the class of construction involved.

9.2.2 Test coupons for qualifying the WPS are welded under the supervision of the Group Welding Engineer GWE) or personnel appointed by the GWE. The actual welding parameters within a narrow range used for the welding of the test coupon are recorded on a Procedure Qualification Record (PQR) (Exhibit 24).

9.2.3 Testing of specimens is performed by MK or an independent test laboratory selected by the Group Welding Engineer from the ASL.

9.2.4 Test results are recorded on the Procedure Qualification Record (PQR) and certified by the Group Welding Engineer.

9.2.5 Utilizing the certified PQR, and supporting WPS(s), the Project Welding Engineer develops and approves a project specific WPS. The Project Quality Manager approves the WPS and then makes available copies of the project specific WPS and supporting PQR's to the ANI.

9.2.6 Welding Procedures previously qualified by Morrison Knudsen Corporation, MK-Ferguson Company, or MK-Ferguson Group, may be utilized by MK provided they are reviewed and accepted by the Group Welding Engineer prior to use in production. This review shall be documented by signature and date on a cover sheet attached to the MK welding procedure.

9.2.7 When there is a specific reason to question the welding procedure, the ANI may require requalification as a requirement for the procedure to be used on work subject to inspection by the ANI.

EXHIBIT 34
PAGE 3 OF 14 PAGE(S)

9.3 **Performance Qualification**

9.3.1 Welders and welding operators are qualified in accordance with ASME Section III and Section IX, and with one or more qualified Welding Procedure Specifications (WPS) by the Project Welding Engineer.

9.3.2 When a welder or welding operator has not welded with a process during a period of six (6) months, all of that individual's qualifications shall expire for this particular process. The Project Welding Engineer is responsible for maintaining a Welder Status Report (WSR) that shows the current status of all welder and welding operator qualifications. WDC's are utilized by the PWE for maintenance of the WSR. A copy of the WSR is made available to the ANI.

9.3.3 A unique test number is assigned to each qualification test for welders and welding operators. This unique test number is described on the Record of Welder or Welding Operator Performance Qualification Test (WPQ, Exhibit 26), which is prepared by the Project Welding Engineer, and identifies the essential variables for each test. The PWE signs the WPQ to certify that the Welder has passed the Qualification test.

9.3.4 The essential variables and the test results obtained by each welder or welding operator are recorded on the WSR which is prepared by the Project Welding Engineer.

9.3.5 The Project Welding Engineer is responsible for assigning each successful welder and welding operator a unique ID Number which is used to identify the work of that welder or welding operator. The Project Welding Engineer maintains records of stencil assignment. When a welder or welding operator leaves the company, the ID Number is not reissued unless that welder or welding operator returns.

9.3.6 The Project Quality Manager or the ANI may require requalification of welders or welding operators if their ability to meet the requirements of ASME Section III, Section IX, or this Manual is questionable.

9.3.7 The Project Welding Engineer shall provide copies of welder and welding operator performance qualification records (WPQ's) to the PQM. The PQM makes the records of welder and welding operator performance qualifications (WPQ's) available to the ANI.

EXHIBIT 34
PAGE 1 OF 12 PAGE(S)

9.4 **Procurement and Receipt of Welding Consumables**

Welding consumables (such as electrodes, spool/coil wire, and consumable inserts) are requisitioned, purchased, and received in accordance with Sections 5.0 and 6.0.

9.5 **Storage**

The Warehouse Manager is responsible for the control, issuance, and storage of welding materials. Welding materials are stored, until needed, indoors and under controlled access conditions in a storage area. The storage area is locked except when material is being received or requisitioned.

9.6 **Holding Ovens**

9.6.1 Low Hydrogen and low/high alloy covered electrodes are received in hermetically sealed containers. When the containers are opened, the electrodes are either immediately issued for use in portable storage ovens or placed in stationary storage ovens. Stationary storage oven temperatures are held within a range recommended by the electrode manufacturer. Loss of storage oven temperature, such as caused by power interruption, is not sufficient cause for destroying electrodes unless interruptions exceed 12 hours in an unopened oven, in which case the contents shall be discarded. Baking of electrodes is not permitted.

9.6.2 Welding consumables placed in stationary storage ovens are identified in each section of the oven or placed inside the ovens in metal cans which reflect proper identification markings.

9.6.3 Temperatures of stationary storage ovens are read and recorded each work day on the Weld Rod Oven Temperature Monitor Sheet (Exhibit 27) by the Weld Rod Attendant. Oven thermometers are calibrated per the requirements of Section 11.0.

9.7 **Issuance of Welding Consumables**

9.7.1 The Project Welding Engineer requisitions welding materials from the warehouse storage area by using a Weld Filler Metal Control Slip (WFMCS) (Exhibit 28). The Material I.D. number(s) of the welding material(s) being issued are listed on the WFMCS.

EXHIBIT 34
PAGE 3 OF 127 PAGE(S)

9.7.2 Welding materials are transferred from the warehouse storage area to a controlled distribution point in the fabrication/installation area. While in the controlled distribution point, welding materials shall remain traceable to their applicable material ID numbers. The controlled distribution point shall remain locked except when closely supervised by the Weld Rod Attendant.

9.7.3 During work package preparation, the Project Welding Engineer enters the Material Code number on the WDC/WRDC (Paragraph 7.3.1 and 9.11.2).

9.7.4 Using the WDC and the WSR, the Responsible Superintendent prepares a Weld Filler Metal Control Slip (WFMCS). Only the welding consumables and backing rings identified on the WDC by Material Code number are listed on the WFMCS. Issuing of welding materials to Welders and Welding Operators is made using the WFMCS. At time of issue, the Weld Rod Attendant marks the material number on the WFMCS to provide the required traceability through a complete Material ID number.

9.7.5 The QC Inspector monitors withdrawal of consumables from ovens by means of the WFMCS.

9.7.6 Transfer of welding consumables from one welder to another is prohibited. Spools/coil of weld wire may be transferred, provided the Responsible Superintendent verifies the ID numbers of the wire being transferred and records the new Welding Operator's name on the WFMCS.

9.7.7 It is the responsibility of the QC Inspector to use the WFMCS in the field to identify the welder(s) and welding materials, to check that the welder(s) were issued the material, and to record the Welder's and Welding Operator's symbol and welding material ID numbers on the WDC.

9.7.8 Welding materials are controlled with written procedures approved in accordance with Section 3.0.

9.8 **Code Welding Material Qualification Testing**

When Code welding consumables must be subjected to additional testing by MK to meet Code or Client specification requirements, the Project Welding Engineer prepares the necessary test coupons and has the additional tests performed in accordance with Code requirements. The results of the additional testing are reported on a CMTR verified by the Project Welding Engineer. The CMTR is included in the final records. The ANI is afforded the opportunity to witness the additional testing.

EXHIBIT 39

PAGE 11 OF 127 PAGE(S)

9.9 **Fabrication/Installation Welding**

9.9.1 All welding is performed by qualified welders and welding operators in accordance with one of the qualified Welding Procedure Specifications (WPS's). WPS's are referenced on the applicable WDC. In addition, WPS's shall be made available in an area adjacent to the work, and in project files for reference by the welders, welding operators, and the ANI.

9.9.2 Utilizing the WSR, the Responsible Superintendent assigns welders and welding operators. It is the Responsible Superintendent's responsibility to assign only those welders and welding operators who have been qualified under the provisions of ASME Section IX and the pertinent article of ASME Section III (depending on the class of construction involved), and whose qualifications are current, as defined by ASME Section IX.

9.9.3 A record of the welders and welding operators used in making each of the weld joints shall be maintained on the WDC by the QC Inspector.

9.10 **Welding Inspection**

The QC Inspector performs the inspections required by the WDC and, if acceptable, documents approval on the WDC and the Daily Inspection Report.

9.11 **Weld Repairs**

9.11.1 Inprocess repairs by welding which are part of the original weld may be made using an approved repair procedure. Repair by welding may be documented on the original WDC, or on a Weld Repair Data Card (WRDC) (Exhibit 22) if more room is required to describe the repair. The WRDC is prepared, reviewed, approved, and utilized in the same manner as described in Paragraph 7.3 for the WDC. Such repairs are not considered "nonconformances".

9.11.2 All other conditions requiring weld repair are considered nonconformances and are controlled as described in Section 8.0. Use of a WRDC is required.

9.12 **Postweld Heat Treatment**

9.12.1 PWHT performed by MK or its subcontractors is performed in accordance with approved written procedures. The Project Welding Engineer verifies the cumulative PWHT holding time at temperature will not be exceeded, and the PWE also describes the specific heat treatment requirements on the Heat Treatment Record (HTR). The Project Welding Engineer also documents the PWHT history

which includes the qualified holding time and temperature, and the cumulative holding time at temperature on the Heat Treatment Record (HTR) (Exhibit 30).

9.12.2 A PWHT subcontractor must be an approved supplier (See Section 5.0). The approved MK heat treatment procedure shall be specified on the PO by number and revision. MK retains responsibility for heat treatment which is performed by a subcontractor.

9.12.3 PWHT activities performed shall be verified by the QC Inspector in accordance with written procedures approved as described in Section 3.0. Verification includes, as a minimum:

a. proper cleaning of the PWHT area prior to the PWHT operation;
b. calibration of temperature recording instruments;
c. heating rate, soak (holding) time and temperature, and cooling rate;
d. review of time and temperature recordings; and,
e. visual examination after PWHT operations.

9.12.4 A time and temperature recording of each PWHT is made by the Responsible Superintendent, which shows the item(s) PWHT, the procedure used (including the revision), the date of the PWHT, operator's name, thermocouple and recorder identification, and method of placement for thermocouples and where attached to the item.

9.12.5 The PWHT is verified by a calibrated time-temperature recorder in conjunction with thermocouples which are attached directly to the item or item in direct contact with the item. Thermocouples and thermocouple material are certified and traceable in accordance with ANSI MC 96.1.

9.12.6 Time-temperature recordings for PWHT, performed by MK or its subcontractor, are reviewed and accepted/rejected for MK by the Project Welding Engineer.

9.12.7 The QA Supervisor, at final documentation review, reviews the heat treatment records against the applicable Welding Procedure Specification and CMTR to assure that the cumulative PWHT holding time at temperature has not been exceeded.

9.12.8 Heat treatment records become a part of final documentation and are made available by the Project Quality Manager to the ANI.

EXHIBIT 34
PAGE 13 OF 127 PAGE(S)

9.13 **Bending and Forming**

9.13.1 The Construction Engineering Manager specifies the required controls for bending and forming operations in procedures which are developed and approved in accordance with Section 3.0.

9.13.2 When the Code requires the qualification of forming procedures, the Construction Engineering Manager is responsible for assuring the required qualification tests are conducted in accordance with the Code and documented in a qualification report. The report is reviewed and approved by the Construction Engineering Manager and responsible QC Supervisor.

9.13.3 Using the results of the forming procedure qualification, the Construction Engineering Manager specifies the material requirements. The material is so specified in the Purchase Requisition (see Paragraph 5.3) such that material specification requirements are met after forming.

9.13.4 Prior to listing the forming procedure in a Work Package (see Paragraph 7.2), the Construction Engineering Manager assures that the procedure has been qualified and the material assigned will meet Code requirements after forming.

9.13.5 Records of the forming procedure qualifications are maintained by the responsible QA Supervisor.

E9

EXHIBIT 34
PAGE 14 OF 127 PAGE(S)

MORRISON KNUDSEN CORPORATION 1500 West 3rd Street, Cleveland, OH 44113	Procedure Type QUALITY ASSURANCE INSTRUCTION	
Procedure Title CONTROL OF WELDING, BRAZING, AND BONDING	Department No. 038	Page 1 of 3
	Procedure No. QAI 11.1	Revision Date 31-Jan-96

1.0 SCOPE

This Quality Assurance Instruction (QAI) establishes the management control system for standardizing, material joining processes (such as fusion welding, brazing, and adhesive/fusion bonding) in accordance with the governing requirements of codes, standards, and specifications. The materials to be joined by these processes are ferrous and nonferrous alloys, and nonmetallic materials. This QAI applies to other allied processes such as the heat treatment of metals, hot forming, thermal spraying, and thermal/mechanical cutting.

2.0 RESPONSIBILITIES

2.1 Group Quality Director (GQD)

The Group Quality Director is responsible for administering a management control system to ensure that the quality of welding, brazing, and bonding is built into the final product through the Group Welding Engineer.

2.2 Group Welding Engineer (GWE)

The Group Welding Engineer is assigned by the GQD at the Group level to ensure the standardization of material joining and cutting processes for the production of weldments, brazes, and nonmetallic bonds. The GWE is responsible for ensuring continuous improvement of material joining services. The GWE provides additional technical services related to the joining and cutting of materials, such as:

a. Development/review of bid proposals, engineering drawings, procedures, standards, and specifications (including associated documents);

b. Sales/marketing, estimating, engineering design, welding metallurgy, and procurement;

c. Fabrication and installation support (including procedure and personnel performance qualifications, heat treating, inspection, examination, testing, repairs, and alterations); and,

d. Consulting, technical assessments, training, welding and cutting safety, selection/use/maintenance of material joining and cutting equipment, and resolution of material joining/cutting related problems.

EXHIBIT 34

3.0 DEFINITIONS

PAGE 15 OF 27 PAGE(S)

Welding, brazing, and bonding terms/definitions shall be in accordance with the appropriate section of the Material Joining Standards Manual (replacing the Material Joining Guide).

4.0 MATERIAL JOINING AND CUTTING PROCESS CONTROL

4.1 General

4.1.1 ✓ All work coordinating forms, documents, procedures, and manuals (such as the MJSM, QEP, PEP, WPS, PQR, WPQ, WQL, WDC, WRDC, etc...) related to material joining or cutting operations shall be generated and controlled by the GWE in accordance with QAI 8.1 "Document Control" and QAI 8.2 "Preparation and Control of Manuals, Procedures, and Instructions". Changes to these forms, documents, and manuals for material joining and cutting operations shall require consent of the GWE.

4.1.2 The GQD or PQM shall notify the GWE of defects, noncompliances, deviations, and conditions adverse to quality of welding, brazing, bonding, and allied processes.

4.1.3 The GWE shall performing training on subjects related to MK Group specific requirements for welding, brazing, bonding, and allied processes with personnel responsible for directing welding activities at the project level.

4.1.4 ✓ The GWE shall be contacted for guidance/resolution to all inquiries concerning the intent of welding, brazing, and bonding related requirements of ASME, ANSI, AWS, and other codes, standards, or specifications. The ASME B&PV and AWS code committees do not and cannot provide consulting services. Formal written inquiries for interpretations on welding, brazing, and bonding related subjects shall only be coordinated by the GWE (with assistance from the GQD).

4.2 Control of Welding, Brazing, and Bonding Procedures (see the MJSM for more information)

4.2.1 The GWE is responsible for the generation, control, and maintenance of Welding Procedure Specifications (WPS) and supporting Procedure Qualification Records (PQR's). This also applies to Brazing and Bonding Procedure Specifications (BPS's).

4.2.2 All WPS's and BPS's shall be qualified under the full supervision and control of the GWE (or GWE's designee). Designation of authority to project personnel shall be by letter.

4.2.3 The destructive testing or nondestructive examination of welding/brazing/bonding procedure qualification test coupons and specimens shall be by the MK Group designee, or (as a recommendation) by an independent test laboratory that is an approved supplier in accordance with QAI 9.1 "Supplier Qualification" and selected by the GWE.

4.2.4 WPS and PQR logs shall be maintained by the GWE to assist in assigning sequential numbers, and track the usability of ASME and AWS procedures (including qualifications records).

4.2.5 Historical (non-active) ASME Section IX WPS's and PQR's shall be retained in the QA Records vault as lifetime records. An original or clear copy of all active WPS and PQR documents (including test records, when available) shall be filed in the vault by either the Document Control Specialist or the GWE. Each WPS file in the vault shall include an approval sheet signed by the GWE and GQD.

4.2.6 A Standard Distribution List (SDL) shall be maintained by the GWE to ensure proper distribution of welding, brazing, and bonding procedures (including PQR's) provided by the Group office to projects in accordance with QAI 8.1. The SDL shall also be used for distribution of the MJSM.

4.2.7 All projects shall include the GWE on controlled distribution of welding, brazing, and bonding associated procedures/documents.

4.3 **Material Joining Standards Manual (MJSM)**

4.3.1 A Material Joining Standards Manual (MJSM, replacing the "Material Joining Guide") shall be maintained and distributed in accordance with QAI 8.1 by the GWE as a resource document to service the diversity of the MK material joining and cutting operations.

4.3.2 The MJSM shall be used to standardize the methods and minimum controls for general practices to be implemented during material joining and cutting operations at the corporate and project levels. The users of the MJSM (or other related documents) are free to identify additional or more stringent requirements.

5.0 REFERENCED FORMS

See the MK Group Material Joining Standards Manual

EXHIBIT 34
PAGE 17 OF 127 PAGE(S)

1.0 SCOPE

This Quality Assurance Instruction (QAI) applies to the procurement, preparation, welding, and testing activities associated with the qualification of welding processes to be used by MK in accordance with ASME and AWS (AWS prequalified status is also addressed).

2.0 RESPONSIBILITIES

2.1 Group Quality Director (GQD)

The Group Quality Director is responsible for administering a management control system to ensure that welding, brazing, and bonding are qualified in accordance with MK's Quality Programs for ASME and AWS code compliance.

2.2 Group Welding Engineer (GWE)

The Group Welding Engineer is responsible for the procedure qualification process which includes preparation and approval of corporate WPS's and supporting PQR's. The GWE is responsible for the review of all project specific ASME and AWS welding procedure specifications (WPS's).

2.3 Project Welding Representative (PWR)

The GWE may delegate the WPS qualification process to a PWR, but the GWE still retains the responsibility for this process. The PWR will not designate another individual for procedure qualification. The GWE may also authorize the PWR to prepare project specific WPS's that stay within the limits of essential and supplementary essential (when notch toughness is required) variables of the approved PQR(s). All such WPS's, prepared by the PWR, are submitted to the GWE for review.

3.0 DEFINITIONS

NOTE: For additional information see the applicable working code.

3.1 Approved Supplier

A supplier authorized by audit to provide services for MK. Approved suppliers are indicated on the Approved Suppliers List (ASL).

3.2 Automatic Welding

Automatic welding is when equipment is used to perform the welding operation without adjustment of the controls by a welding operator (e.g., robot).

3.3 Certificate of Compliance (C of C)

A Certificate of Compliance is a written statement attesting that the supplied material or service complies with the requirements established by the purchase order (PO). This may not include a statement, by the supplier, attesting to the compliance of the PO.

3.4 Certified Material Test Report (CMTR)

A CMTR is a signed written document that contains sufficient data and information to verify the actual properties of a material with the actual results of all required chemical analyses, mechanical tests, and examinations required by the purchase order (PO). Upon request on the PO, this may include a statement (by the supplier) attesting to the compliance of a specific PO and/or the Supplier's Quality Program.

3.5 Material

Base metal and weld filler metal (includes consumable and nonconsumable) used for WPS qualification.

3.6 Editorial change

Altering the intent of a statement to suit a particular purpose (Ex: solvent to approved solvent, 1/2" max. to 1/2" min., or wire feed speed = 30-80 ipm to 30-100 ipm). See also ASME IX, QW-200.2c. All changes require revision of the document.

3.7 Procedure Qualification Record (PQR)

A PQR is the document providing the actual welding variables used to produce an acceptable test weld and the results of tests conducted on the weld to qualify a welding procedure specification (WPS).

3.8 Service

Nondestructive examination (NDE), destructive testing (DT), postweld heat treatment (PWHT), and material and test equipment (M&TE) calibration.

3.9 Test Coupon

A test coupon is a weldment for procedure and/or performance qualification testing. The coupon may be of any material form consisting of one or a combination of plate, pipe, tube, etc..., and may be fillet welded, overlayed, groove welded, etc...

EXHIBIT 37
PAGE 11 OF 12 PAGE(S)

3.10 Test Specimen

A test specimen is a sample of a test coupon for a specific test. The specimen may be for bend testing, tensile testing, impact testing, chemical analysis, macrotest, etc... A full size test coupon can be used for radiographic examination or small diameter pipe tensile testing.

3.11 Typographical change

Altering the spelling of a statement. (Ex: ER705-2 to ER70S-2, GW/1.1-1 to GM/1.1-1, or solvant to solvent). All changes require revision of the document.

3.12 Welder

Unless otherwise indicated and when used in this QAI, the term welder encompasses welding operator.

3.13 Welding

Unless otherwise indicated and when used in this QAI, the term welding encompasses fusion and solid state welding processes. For brazing and bonding procedure qualifications, notify the GWE for additional assistance.

3.14 Welding Procedure Specification (WPS)

A WPS is a document providing the details of required variables for a specific welding application to ensure repeatability with properly qualified welders or welding operators.

4.0 INSTRUCTIONS

4.1 General Requirements

4.1.1 Proper time should be scheduled for performing WPS qualification. The time required for a standard WPS qualification, with standard test coupon and filler metal, is usually a minimum of 1-2 weeks. The time required for a non-standard WPS qualification, such as SAW or machine GMAW/GTAW, is usually a minimum of 3-4 weeks.

4.1.2 When permitted by code (i.e., AWS), MK prequalified WPS's are permitted to be used without qualification by MK. When permitted by code, GWE, and the client (written approval is required from the client), WPS's qualified by other organizations are permitted without qualification by MK.

4.1.3 Prior to any type of tacking/welding on production welds, complete and code compliant WPS's are qualified (unless otherwise permitted by 4.1.2) and prepared by MK in accordance with the following:

a. Welding procedures are qualified in accordance with the requirements of ASME Section IX and AWS. Additional requirements may be applied from other sections of codes, standards and specifications, and engineering design criteria.

b. Issuance of MK WPS's to projects is coordinated only by the GWE.

c. Prior to use, all successfully qualified WPS's are approved by the Group Quality Director (GQD).

4.1.4 The GWE/designee prepares/verifies purchase requisitions (PR) for all materials and services needed during welding procedure qualification. Purchase requisitions for materials and services include all necessary information to provide detail guidance as to the requirements established by code(s) and contract for welding procedure qualification.

4.1.5 "C of C's", MTR's, or CMTR's are obtained from the supplier of materials to confirm the supplier has complied with the requirements of the purchase order, code, standard, and/or specification. A test report (certification may be required) is obtained from the supplier of testing services (includes strip chart for PWHT). A reader sheet is obtained from the supplier of NDE services.

4.1.6 Upon receipt of materials, the GWE reviews all associated documentation and verifies identification markings on the materials to ensure appropriate materials are used for welding procedure qualification.

4.2 Preparations for the Qualification of Welding Processes

4.2.1 A PWR identifying the need for the qualification of a welding process contacts the GWE either by phone or facsimile. As applicable, the following information is provided to the GWE to determine availability of active or historical WPS's:

a. Year of edition, section, and addenda for the applicable code;

b. Client's technical/design specifications;

c. Welding process(es), type, and arc transfer mode, and required filler metal;

d. Base metal specification number, grade, alloy designation, UNS-No., and thickness;

e. Minimum design metal temperature (MDMT), or lowest service temperature (for nuclear piping, pumps, and valves) and hydrostatic testing temperature (for nuclear vessels);

f. PWHT requirements [includes aggregate (sum of) times at soak temperatures];

g. Type of service conditions [high pressure, cyclic, or corrosive environment (i.e., caustic, MEA, hydrogen)]; and,

h. Scheduled deadline for completion (prior to qualifying welders and/or production welding).

4.2.2 The GWE reviews the data presented in 4.2.1 for the proposed WPS and MK's list of active and historical welding procedures to ensure PQR's do not already exist to support the proposed WPS. At this time the GWE may also suggest changes in the identified variables, or suggest additional variables or techniques to be addressed by the WPS. In all such instances, the GWE is to consult with those proposing the WPS to ensure their needs are met prior to finalizing the content of the proposed WPS.

4.2.3 Once procedure qualification is determined to be necessary, the following apply:

a. A draft proposed WPS is completed by either the GWE or PWR with all essential, supplementary essential (when required), and nonessential variables that would apply to the welding process. When generated by a PWR, the proposed WPS is submitted to the GWE for review;

b. When selecting information to be used for the proposed WPS, the applicable code, standard, or any other special contract imposed requirements (e.g., notch toughness, hardness testing, ferrite content, corrosion resistance) must be addressed; and,

c. The proposed WPS form is completed and is used to direct the welder during qualification.

NOTE: The GWE follows the same process, as discussed above, when proposing qualification of a welding process.

4.2.4 Only the GWE assigns a number to the proposed ASME WPS. The GWE obtains a number from MK's list of ASME welding procedures for the proposed WPS. This traceable unique number is to be used on documents that record activities and actual data related to the qualification of the proposed WPS (e.g., purchase orders, PQDS, test coupon, test laboratory reports, heat treatment record, and PWHT strip chart record). The format of ASME WPS numbers is as follows:

(see note 3)

(see note 1) (see note 5 & 8)

GT-SM/1.1-Q1A or a, Rev. 0 (As applicable, see note 9)

(see note 6 & 8)

(see note 2) (see note 4 & 7)

EXHIBIT 3

Note 1: First & second (or more) welding processes and/or special application (see note 10) for a WPS and PQR. Note, additional processes are identified by entering a "-" followed by the process designating letters (see 4.2.5).

Note 2: P-No. to P-No. (see ASME IX, QW-422). For base metals unassigned by ASME IX, use the ASTM material specification number (such as GT-SM/A514.A514-1), trade name (GT/HR160.HR160-1), or grade (such as GT/HK40.HK40-1) for a WPS. Unassigned metals are identified in the WPS and on the PQR in accordance with ASME IX, QW-424.1.

Note 3: Qualification letter "Q" designation to be used only for identifying a PQR, such as GT-SM/1.1-Q1 (See 4.5.5).

Note 4: First WPS or PQR in series for one or a combination of welding processes and material such as WPS-No. GT/51.51-2 and PQR-No. GT/61.61-Q4, respectively. This designated number is recognized as the original number used for a WPS or PQR. All subsets of WPS's only (Ex: GT/51.51-2a) are generated from this designated number for changes in nonessential variables. Other sequential numbers are related to changes in essential and supplementary essential (when required) variables, such as GT/51.51-3 or GT/61.61-Q3. A WPS can also generate subsets, such as GT/51.51-3A and GT/51.51-3b, etc...

Note 5: Upper case letter indicates that a WPS nonessential variable has been changed by the GWE for corporate wide use, but remains within the limits of essential variables addressed by ASME IX.

Note 6: Lower case letter indicates that a WPS nonessential variable has been changed by the PWR for a specific project, but remains within the limits of essential variables addressed by ASME IX. All project specific WPS's are submitted to GWE for review.

Note 7: If an essential and/or supplementary essential variable were to be changed within the same process and material, a new WPS would be qualified by assigning the next consecutive number in series (Ex: GT/1.1-1 without PWHT which is changed to GT/1.1-2 with PWHT, as requested by the PWR).

Note 8: If a nonessential variable must be changed and used permanently, a separate procedure is issued with a lower or higher case letter (Ex: GT/1.1-1 without backing gas changed to GT/1.1-1a with backing gas by the PWR). This creates two separate documents used for different reasons and purposes without requalification.

Note 9: A revision number is recorded on each WPS and/or PQR page. If any change is required such as the amperage range on GT/1.1-1a, Rev. 0 needs to be increased to Rev. 1, the procedure would be assigned the next consecutive revision number.

Note 10: Welding procedures for special applications are assigned individually such as SM-CLAD/1.8-1, SM-TBR/3.3-1, and GT-Liner/8.44-1.

4.2.5 As stated in paragraph 4.2.4, each WPS is coded by letter (also designated by the GWE) to indicate the welding process and/or special application. These letters are defined as follows:

CLAD - Cladding
ES - Electroslag
EG - Electrogas
FC - Semi-Automatic Flux Cored Arc Welding, Manual
FCM - Flux Cored Arc Welding, Machine
GT - Gas Tungsten Arc Welding, Manual
GTA - Gas Tungsten Arc Welding, Automatic
GTM - Gas Tungsten Arc Welding, Machine
GM - Semi-Automatic Gas Metal Arc Welding, Manual
GMM - Gas Metal Arc Welding, Machine
Liner - Liner
P - Plasma Arc Welding, Manual
S - Soldering
SAM - Submerged Arc Welding, Machine
SM - Shielded Metal Arc Welding
SW - Stud Welding, see Appendix 3
TBR - Temper Bead Repair
Rail - Welding on the railroad

4.2.6 When prequalified status is not permitted by AWS codes, the following documents constitute an AWS qualified welding procedure:

a. AWS Welding Procedure Specification

b. AWS Welding Procedure Qualification Record *

* For other than AWS prequalified status procedures

4.2.7 Each AWS qualified WPS (not prequalified WPS's) specifies the welding procedure qualification record (PQR) to be used as the supporting document.

4.2.8 Each qualified AWS WPS (does not apply to prequalified WPS's) is assigned a unique number to indicate the welding process, joint type, and weld penetration category. A consecutive number follows to identify a separate procedure using the same combination of welding process and weld penetration category. A minor variation in procedure is indicated by a small case letter following the consecutive number. Only the GWE assigns a number to AWS qualified or prequalified WPS's. The GWE obtains a number from MK's list of AWS welding procedures. The format of this number is as follows:

Weld Penetration

Consecutive Number

Welding Process(es)
(See 4.2.5)

GT-GM/BTC.UF-Q1A or a, Rev. 0

corporate/project

Joint Type

Indicates a PQR document

NOTE: A prequalified WPS is identified as "PQWPS" followed by a sequential number (Ex: PQWPS-3). Only the applicable page(s) of a PQWPS are used on production welds by the welder.

4.2.9 Each procedure is coded by letter and number to indicate the joint type and weld penetration in accordance with the following:

Joint Types

B - Butt
C - Corner
T - Tee
BTC - Butt, Tee, or Corner
K - Skewed
E - Edge
L - Lap

Weld Penetration

F - Full penetration
P - Partial penetration
U - Unlimited thickness
L - Limited thickness

4.2.10 When necessary, all variable entries on the WPS and PQR are addressed on welding documents with either "N/A", "None" or some other relevant comment to eliminate any concerns on the applicability of a variable towards a specific welding process. For example, when omitting the use of trailing gas, retainers, or pulsing current for the GTAW process, the variables are addressed as "none", not "N/A". Omission of variables is not acceptable.

EXHIBIT 37

PAGE 22 OF 147 PAGE(S)

4.3 Procedure Qualification

4.3.1 With assignment of the WPS number by the GWE, the process for welding procedure qualification is authorized to proceed with the procurement of materials.

4.3.2 Since improper materials can significantly affect welding characteristics and the outcome of test results, an approved material supplier (selected by the GWE) should be used for welding procedure qualification. As a minimum, a material test report (MTR) for base metal and "C of C" for weld filler metal is obtained from the supplier of the material to confirm the supplier has supplied the materials specified by the purchase order.

4.3.3 It is permissible to contract any or all of the work for the preparation of test coupons before welding provided MK accepts the responsibility for any such work. The facilities of non-MK organizations may be used, with consent of the GWE, provided that the welder or welding operator (who is paid by MK) using the welding process is under the full supervision and control of the GWE/designee during the production of the test coupon.

4.3.4 Prior to start of welding, the actual thickness of the base metal in the area of the weld groove (e.g., the thinner section of a tapered pipe ID) is measured using either a calibrated measuring device (within a range of 3 to 4 decimal places) or ruler (to the nearest 1/32") to determine that the actual thickness of the base metal is in accordance with the purchase requisition.

4.3.5 The GWE supervises the welding of the test coupon. The GWE provides the skilled welder with a copy of the proposed WPS, reviews the WPS with the welder, and ensure the welder has a full understanding of the requirements. All of the welding parameters on the proposed WPS are to be complied with during welding of the test coupon.

4.3.6 The GWE may suspend the welding at any time the welder's performance or the welding process is unsatisfactory. The GWE may direct welding to be resumed when satisfied the required conditions are met.

4.3.7 The GWE records the actual data, as applicable, on the "Procedure Qualification Data Sheet (PQDS)". All data and requirements pertinent to the welding process are recorded on this form by the GWE. This form requires that data be recorded on a bead/pass by bead/pass basis (1 or more beads/passes may create a single layer). Therefore, the full time presence of the GWE is required. When several PQR's are being qualified simultaneously, the GWE monitors the gathering of all data. When notch toughness testing is not required, data is recorded on pass/layer by pass/layer basis.

4.3.8 Measuring instruments used for monitoring data such as tong meters (or voltage and amperage meters), contact pyrometers, micrometers, and calipers (excluding pressure gauges used for welding gases) are calibrated in accordance with applicable requirements of the manufacturer and/or the National Institute of Standards and Technology (NIST). Measurement and Test Equipment (M&TE) is used on a continuous basis during welding of the test coupon.

4.3.9 Preheat and interpass temperatures are monitored using either a calibrated measuring instruments and/or temperature indicating crayons. Interpass temperature is defined as the highest temperature in the weld joint immediately prior to welding, or in the case of multiple pass welds, the highest temperature in the section of the previously deposited weld metal, immediately before the next pass is started.

4.3.10 When more than one process or filler metal is used to weld a test coupon, the actual approximate deposited weld metal thickness of each process or filler metal is recorded. Reinforcement (root and cover pass) is not to be included for deposited thickness measurements. Deposited weld metal thickness is obtained by using a calibrated depth gage/indicator or ruler (to the nearest 1/32") to measure the distance from the crown of the weld bead to the base metal surface, and then subtract the measured value from the base metal thickness obtained in paragraph 4.3.4.

NOTE: For all welding processes (except GTAW), the approximate measurement of each pass/layer is required to verify that the actual deposited weld metal thickness did not exceed 1/2" (see QW-403.9), when heat input is controlled by volume of weld metal (see QW-409.1b), or for HFWMO/CRWMO (see QW-402.16). For GTAW, no measurement is required.

4.3.11 When notch toughness requirements are imposed, heat input (kJ/in.) calculation is required for each bead. This is calculated as follows (Example: 54.6 kJ/in. obtained from 54,550 kJ/in.):

$$\frac{\text{VOLTS} \times \text{AMPS} \times 60}{1000 \times \text{TRAVEL SPEED (ipm)}} = \text{kJ/in. (nearest tenth)}$$

4.3.12 At completion of the test coupon, the GWE/designee either physically marks the test coupon with a "T" to locate the top of the test coupon, or marks the removal location of mechanical/metallurgical test specimens on the test coupon.

4.3.13 In addition to code requirements for testing procedure qualification test coupons, it is recommended that each test coupon needs to be examined by radiography. Nondestructive examination (NDE) is recommended to prevent the waste of testing cost on an unacceptable test coupon, and to verify continuity of the weld. This recommendation is made to avoid costly processing of mechanical test specimens and PWHT (when required). Specimen location is as required by the appropriate code requirements. Anticipated NDE (PT, MT, RT and/or UT) to be performed on production weldments should be implemented during procedure qualification. When nondestructive testing is to be used, the appropriate Articles and Standards of ASME Section V are followed.

4.3.14 When required, heat treatment of a test coupon is performed by either MK or a supplier in accordance with a heat treatment procedure approved by the GWE. The postweld heat treatment total soak time (t_{st}) at temperature is at least 80% of the maximum time ($.8t_{max}$) to be applied to the component weld material in production. Unless otherwise required by

code or contract documents, the total PWHT soak time (t_{st}) at temperature applied to the test coupon is to be the greater of $3(.8t_{max})$ or 8 hours (see below for equation). The PWHT total soak time should applied in one heating cycle. The PWHT strip charts shall be sent to the GWE with the test records for evaluation.

Minimum PWHT soak time for WPS qual.: $t_{st} = 3(.8t_{max})$ or 8 hrs., whichever is greater.

4.4 <u>Qualification of Test Specimens</u>

4.4.1 Testing of specimens and certification of test results is performed by MK or an independent test laboratory selected by the GWE. Test laboratory services is to be obtained from an MK approved supplier indicated on the Approved Suppliers List (ASL). Laboratories performing mechanical and/or metallurgical tests are identified on the PQR.

4.4.2 The GWE/designee reviews the applicable requirements to ensure compliance, and establishes testing and specimen removal locations from the test coupon. The removal location of test specimens can be recorded on either the PQDS or described in the purchase order (PO). A copy of the PQDS or PO is retained with the test coupon for shipment to the test laboratory.

4.4.3 Procurement documents for heat treating, weld specimen removal, and weld specimen testing are to fully describe all applicable requirements in detail. When applicable, the purchase order identifies the areas of the weld where each different process or filler metal was used. A copy of the purchase order (including changer orders) used to obtain weld coupon test services is sent to the GWE for record retention.

4.4.4 The supplier is responsible for complying with the requirements of the purchase order. For instance, to ensure compliance with code intent and to properly obtain the nominal heat input requirements for charpy V-notch toughness testing (per SA-370, Fig. 11, Type A), the test laboratory shall be required (using any verifiable method) to describe the following on the test report:

a. The lateral expansion and absorbed energy;
b. The test temperature;
c. Cross-sectional dimensions of the Charpy V-notch specimen;
d. Circumferential and longitudinal specimen removal locations in the test coupon;
e. Cross-sectional (through thickness) specimen removal locations in the weld joint; and,
f. Cross-sectional Charpy V-notch orientation in the weld joint.

<u>NOTE</u>: For drop weight specimens, the tension surface of the specimen shall be oriented parallel to the surface of the test weld assembly.

4.4.5 For drop weight and charpy V-notch toughness testing (QW-172 & 171, respectively), the results shall be reported in the CMTR. Notch toughness test machines shall be calibrated at least once per year using methods outlined in ASTM E23 and employing standard specimens obtained from the National Institute of Standards and Technology (NIST).

Temperature measuring instruments used to control test temperature of specimens for drop weight and notch toughness testing shall be calibrated at least once in each 3 month interval.

4.4.6 MK may either cut the qualification test specimens from the test coupon or contract this activity to the approved supplier that performs the testing of the specimens. Cutting of the test specimens is not performed with a thermal process, unless the specimens are submerged in a coolant during the cutting process, or a minimum of 1/8" of the cut surface is removed by mechanical methods. Machining of the test specimens is performed by the supplier providing the testing services.

4.4.7 The supplier is required to supply a "C of C", or provide a statement on the test report confirming compliance with the purchase order. The purchase order shall require that the signed original test data report be sent to the GWE.

4.4.8 If the laboratory test report indicate failure to meet the applicable requirements, the qualification process is restarted after evaluation and confirmation by the GWE.

4.5 <u>Preparation and Approval Cycle of a Successful Welding Procedure Qualification</u>

4.5.1 With receipt of the original test report(s) from the test laboratory [using the proposed WPS, Procedure Qualification Data Sheet (PQDS), actual test specimens, and purchase orders], the GWE certifies the PQR. It is the GWE's responsibility to select and record the appropriate data on the PQR. All variables are the actual variables (including ranges) used during the welding of the test coupons. If variables are not monitored during welding, they are not recorded. PQR's list essential, supplementary essential (when applicable), and appropriate nonessential variables.

4.5.2 When PWHT is required by the WPS, all mechanical testing records (for tensile, bend, C_V, and drop weight testing) shall indicated acknowledgment of PWHT activities on the test record.

4.5.3 Applicable essential, nonessential, and supplementary essential variables (when required by code for notch toughness testing) are described on the WPS and are within parameters established by the supporting Procedure Qualification Record(s) referenced on the WPS. The PQR does not have to reference all encompassing procedure specifications which a particular PQR is supporting.

4.5.4 Once the PQR is completed, the proposed WPS is also finalized to provide direction to welders or welding operators to ensure compliance with the requirements. Other information may be included in the WPS that may be helpful in making production weldments. A WPS is considered finalized when the supporting PQR(s) is certified to meet the applicable requirements, and the GWE lists the applicable PQR number(s) on the WPS.

4.5.5 Paragraph 4.2.4 of this QAI describes the WPS numbering format. This same format is used to identify the applicable PQR with the exception that the last number is prefaced with the

letter "Q" for qualification (ex: GT-SM/1.1-Q1) following the welding process(es) and material combination. The GWE numbers the PQR, and then signs/dates to indicate approval of the document.

4.5.6 WPS's and approved supporting PQR's are controlled and issued to projects by the GWE. Further distribution of these documents is determined at the project level. It is understood that only WPS's are made available to welders. ASME and AWS welding procedures are not transferred from one MK project to another, other than through the GWE.

4.5.7 If the welding procedure is accepted and passes the testing requirements, the welder who welds on the procedure qualification test coupon is qualified (usually limited qualification) within the range of essential variables established during procedure qualification.

4.6 <u>Changes to a WPS and PQR</u>

4.6.1 Changes to a PQR are substantiated with supportive documentation. Changes to a WPS and PQR (such as editorial or typographical errors) requires a revision, and all previous revisions to WPS's and PQR's (as deemed possible by the GWE) are maintained on file for future reference.

4.6.2 PQR's are MK corporate level documents and records of historical events, and therefore are not subject to change at the project level. This also applies to PQR and WPS numbering formats. Project specific changes to PQR may be requested from the GWE and, if the proposed changes are acceptable to the GWE, the PQR is issued as a project specific PQR. For such PQR's, the PQR number is appended with a lower case letter (e.g., GT-SM/1.1-Q1<u>a</u>). The PWR sends the original changed PQR to the GWE for inclusion in corporate files.

4.6.3 WPS's are subject to change at the project level to meet project specific needs. Often projects will develop WPS's where the variables have narrower ranges than allowed by the supporting PQR and originating WPS to reduce the risk of exceeding PQR allowables during field welding (see 4.2.4, Note 9). Upon request by the GWE, the projects will send copies of all changed MK WPS's to the GWE for inclusion in corporate files for future reference.

4.6.4 No permanent changes are made to nonessential variables without revision of the WPS. To temporarily change a nonessential variable(s) for a particular WPS and specific work condition, the same procedure number can be maintained with the addition of an upper or lower case letter to indicate corporate or project temporary change, respectively (Example: from SM/1.1-1 to SM/1.1-1a for Project specific temporary change). Procedure number changes are only made when qualifying an entirely new procedure for essential and/or supplementary essential variable(s). All changes, including editorial changes and correction of typographical errors, require revision by number to the WPS. Changes to essential and/or supplementary essential variables without qualification is prohibited.

5.0 RECORDS

5.1 Corporate Records

5.1.1 The originating WPS, PQR and related documents (see below), and all subsequent revisions or changes to the PQR and/or WPS are considered corporate "Quality Records". These records are processed and stored in accordance with the Quality Program. The following documents, where they exist, are attached to, and form a part of, the final PQR to be retained and filed in the corporate vault by the GWE:

a. Documentation on the base and filler metal(s) used to make the test coupon such as CMTR, "C of C", MSDS, filler metal storage/drying conditions, filler metal manufacturer's amperage and voltage recommendation, etc...

b. PWHT records and/or strip charts,

c. Laboratory test records describing testing methods (e.g., tensiles, bends, charpy V-notch, delta ferrite, and chemical analysis) and results, and

d. Nondestructive and destructive testing records on all tests made during and after completion of the test coupon.

5.1.2 The PQDS and purchase orders related to materials and services are the responsibility of the GWE. These records are stored in MK's corporate vault for information only.

5.2 Project Records

5.2.1 The originating WPS, PQR and related documents (see 5.1.1a-d), and all subsequent revisions or changes to the PQR and/or WPS qualified on a project are considered corporate "Quality Records". In addition, these records are processed and stored in accordance with the project's Quality Program and the original records are submitted to the GWE. If a corporate WPS is not used on a project, the corporate WPS is not considered a "Quality Record".

5.2.2 At the end of all projects (includes all nuclear projects), one copy of all ASME/AWS project specific WPS's and PQR's are submitted to the Client.

5.2.3 For non-nuclear projects (not within the scope of ASME Section III, Div. 1), the original job specific WPS's and PQR's, with all revisions, are sent to the GWE. For non-nuclear projects, the GWE may elect to use MK's warehouse document storage for 7 year retention.

5.2.4 At the end of a nuclear project, ASME Section III related WPS's and PQR's are submitted to MK's corporate Quality Management Department (QMD) for storage in the vault as lifetime retention.

6.0 REFERENCES

None

7.0 REFERENCED FORMS AND EXHIBITS

Later Date - Sample Purchase Requisitions for procurement of materials and services
Later Date - QTS-W-003-1 thru 3 - Procedure Qualification Data Sheet (PQDS)

NOTE: See the "QAI Forms" section of this QAI manual for the above form and exhibits.

1.0 SCOPE

This Quality Assurance Instruction (QAI) applies to the procurement, preparation, welding, and testing activities associated with the qualification of welding processes to be used by MK in accordance with ASME and AWS (AWS prequalified status is also addressed).

2.0 RESPONSIBILITIES

2.1 Group Quality Director (GQD)

The Group Quality Director is responsible for administering a management control system to ensure that welding, brazing, and bonding are qualified in accordance with MK's Quality Programs for ASME and AWS code compliance.

2.2 Group Welding Engineer (GWE)

The Group Welding Engineer is responsible for the procedure qualification process which includes preparation and approval of corporate WPS's, and certification of supporting PQR's. The GWE is responsible for the review of all project specific ASME and AWS welding procedure specifications (WPS's).

2.3 Project Welding Representative (PWR)

The GWE may designate the WPS qualification process to a PWR by letter, but the GWE still retains the responsibility for this process. Designation to the PWR for procedure qualification shall not be re-delegated by the designee. If a PWR is designated for procedure qualification, this individual shall comply with the contents of this document, unless otherwise authorized by the GWE. The GWE may also authorize the PWR to prepare and approve project specific WPS's that stay within the limits of essential and supplementary essential (when notch toughness is required) variables of certified PQR(s). All such WPS's, prepared and approved by the PWR, are submitted to the GWE for review.

3.0 DEFINITIONS

NOTE: For additional information see the applicable working code.

3.1 Approved Supplier

A supplier listed on the Approved Suppliers List (ASL) which is obtained from the GQD.

3.2 Automatic Welding

Automatic welding refers to equipment used to perform the welding operation without adjustment of the controls by a welding operator (e.g., robot).

3.3 Certificate of Compliance (C of C)

A Certificate of Compliance is a written statement attesting that the supplied material or service complies with the requirements established by the purchase order (PO). This may not include a statement, by the supplier, attesting to the compliance of the PO.

3.4 Certified Material Test Report (CMTR) or Mill Test Report (MTR)

A CMTR is a signed written document that contains sufficient data and information to verify the actual properties of a material with the actual results of all required chemical analyses, mechanical tests, and examinations required by the purchase order (PO). Upon request on the PO, this may include a statement (by the supplier) attesting to the compliance of a specific PO and/or the Supplier's Quality Program. A MTR is not certified by signature and may not include a statement, by the supplier, attesting to the compliance of the PO.

3.5 Material

Base metal and weld filler metal (includes consumable and nonconsumable) used for WPS qualification.

~~Deletion~~

3.6 Procedure Qualification Record (PQR)

A PQR is the document providing the actual welding variables used to produce an acceptable test weld and the results of tests conducted on the weld to qualify a welding procedure specification (WPS).

3.7 Service

Nondestructive examination (NDE), destructive testing (DT), postweld heat treatment (PWHT), and material and test equipment (M&TE) calibration.

3.8 Test Coupon

A test coupon is a weldment for procedure and/or performance qualification testing. The coupon may be of any material form consisting of one or a combination of plate, pipe, tube, etc..., and may be fillet welded, overlayed, groove welded, etc...

3.9 Test Specimen

A test specimen is a sample of a test coupon for a specific test. The specimen may be for bend testing, tensile testing, impact testing, chemical analysis, macrotest, etc... A full size test coupon can be used for radiographic examination or small diameter pipe tensile testing.

~~Deletion~~

3.10 Welder

Unless otherwise indicated and when used in this procedure, the term welder encompasses welding operator.

3.11 Welding

Unless otherwise indicated and when used in this procedure, the term welding encompasses fusion and solid state welding processes. For brazing and bonding procedure qualifications, notify the GWE for additional assistance.

3.12 Welding Procedure Specification (WPS)

A WPS is a document providing the details of required variables for a specific welding application to ensure repeatability with properly qualified welders or welding operators.

4.0 INSTRUCTIONS

4.1 General Requirements

4.1.1 Proper time should be scheduled for performing WPS qualification. The time required for a standard WPS qualification, with standard test coupon and filler metal, is usually a minimum of 1-2 weeks. The time required for a non-standard WPS qualification, such as SAW or machine GMAW/GTAW, is usually a minimum of 3-4 weeks. Non-standard WPS qualification may involve thermal spraying, or charpy-V notch, hardness, corrosion and drop weight testing.

4.1.2 When permitted by code (i.e., AWS), MK prequalified WPS's are permitted to be used without qualification by MK. When permitted by code, the GWE and client (written approval may be required from the client), WPS's qualified by other organizations are permitted without qualification by MK.

4.1.3 Prior to any type of tacking/welding on production welds, complete and code compliant WPS's are qualified (unless otherwise permitted by 4.1.2) and prepared by MK in accordance with the following:

a. Welding procedures are qualified in accordance with the requirements of ASME Section IX and AWS. Additional requirements may be applied by the client or from other sections of codes, standards and specifications, and engineering design criteria.

b. Issuance of MK Corporate WPS's to projects is coordinated only by the GWE.

c. Prior to use, all successfully qualified WPS's are approved by the Group Quality Director (GQD).

4.1.4 The GWE prepares purchase requisitions (PR) for all materials and services needed during welding procedure qualification, and submits the PR to the GQD for approval. Purchase requisitions/orders (PO) for materials and services include all necessary information to provide detail guidance as to the requirements established by code(s) and contract for welding procedure qualification. The GWE may designate the preparation of PR to a PWR by letter.

4.1.5 "C of C's", MTR's, or CMTR's are obtained from the supplier of base/weld materials to confirm the supplier has complied with the requirements of the purchase order, code, standard, and/or specification. A test report (certification may be required) is obtained from the supplier of testing services (includes strip chart for PWHT). A test report (i.e., RT reader sheet) is obtained from the supplier of NDE services.

4.1.6 Upon receipt of materials, the GWE reviews all associated documentation and verifies identification markings on the materials to ensure appropriate materials are used for welding procedure qualification.

4.2 <u>Preparations for the Qualification of Welding Processes</u>

4.2.1 A PWR identifying the need for the qualification of a welding process contacts the GWE either by phone or facsimile. As applicable, the following information is provided to the GWE to determine availability of active or historical WPS's:

a. Year of edition, section, and addenda for the applicable code;

b. Client's technical/design specifications;

c. Welding process(es), type, arc transfer mode, and required filler metal;

d. Base metal specification number, grade, alloy designation, UNS-No., and thickness;

e. Minimum design metal temperature (MDMT), or lowest service temperature (for nuclear piping, pumps, and valves) and hydrostatic testing temperature (for nuclear vessels);

f. PWHT requirements [includes aggregate (sum of) time at soak temperature];

g. Type of service conditions [high pressure, cyclic, or corrosive environment (i.e., caustic, MEA, hydrogen)]; and,

h. Scheduled deadline and priority for completion of each WPS that needs to be qualified (prior to qualifying welders and/or production welding). Schedule deadline should include planning based on cost, availability, and time for delivery of materials/services to:

(1) Order new or use existing base/weld materials that comply with 4.1.5. This would include decisions based on design requirements such as aggregate PWHT time, type of weld filler metal (may require 6-8 weeks delivery for special mechanical properties), yield strength testing, drop weight testing, specific temperature for charpy-V notch testing, hardness testing, and other needs for a project.

(2) Use welder(s), facilities, welding equipment/tools, and calibrated measuring instruments. May need to purchase new welding equipment/tools for special applications.

(3) Use an approved test laboratory (to be included on ASL per 4.4.1).

(4) Permit PWHT, and additional welding/testing for possible failure of test specimens.

(5) Process WPS's/PQR's and test welders, prior to production welding.

4.2.2 The GWE reviews the data presented in 4.2.1 for the proposed WPS and MK's list of active and historical welding procedures to ensure PQR's do not already exist to support the proposed WPS. At this time the GWE may also suggest changes in the identified variables, or suggest additional variables or techniques to be addressed by the WPS. In all such instances, the GWE is to consult with those proposing the WPS to ensure their needs are met prior to finalizing the content of the proposed WPS.

4.2.3 Once procedure qualification is determined to be necessary, the following apply:

a. A draft proposed WPS is completed by either the GWE or PWR with all essential, supplementary essential (when required), and nonessential variables that would apply to the welding process. When generated by a PWR, the proposed WPS is submitted to the GWE for review;

b. When selecting information to be used for the proposed WPS, the applicable code, standard, or any other special contract imposed requirements (e.g., notch toughness, hardness testing, ferrite content, corrosion resistance) must be addressed; and,

c. The proposed WPS form is completed and is used to direct the welder during qualification. The proposed WPS may consist of either both MK's ASME/AWS WPS formats and MK's "Procedure Qualification Data Sheet (PQDS)", or just use MK's PQDS with indicated welding parameters (such as amps, volts, travel speeds, wire feed speeds).

NOTE: The GWE follows the same process, as discussed above, when proposing qualification of a welding process.

4.2.4 Only the GWE assigns a unique number to the proposed ASME/AWS WPS. This unique number may be assigned via phone, IOC, or facsimile when a proposed WPS is being developed at the project level. The GWE obtains a number from MK's list of ASME welding procedures for the proposed WPS. For special or multiple procedure qualification testing, the GWE may elect to use a unique number (other than a WPS-No.) for traceability until successful completion of qualification(s). A traceable unique number is to be used on documents that record activities and actual data related to the qualification of the proposed WPS (e.g., purchase orders, PQDS, test coupon, test laboratory reports, heat treatment record, and PWHT strip chart record). The format of ASME WPS numbers is as follows:

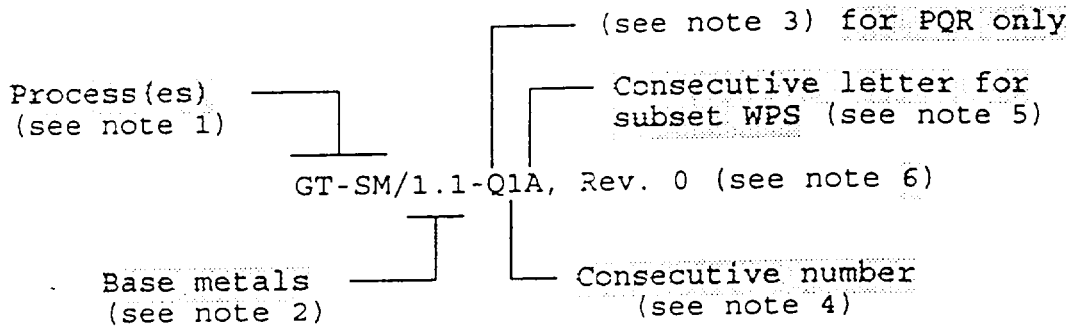

Note 1: First & second (or more) welding processes and/or special application (see note 7) for a WPS and PQR. Note, additional processes are identified by entering a dash (-) followed by the process designating letters (see 4.2.5).

Note 2: P-No. to P-No. (see ASME IX, QW-422). For base metals unassigned by ASME IX, use the ASTM material specification number (such as GT-SM/A514.A514-1), trade name (GT/HR160.HR160-1), or grade (such as GT/HK40.HK40-1) for a WPS. Unassigned metals are identified in the WPS and on the PQR in accordance with ASME IX, QW-424.1.

Note 3: Qualification letter "Q" designation to be used only for identifying a PQR, such as GT-SM/1.1-Q1 (See 4.5.5).

Note 4: Consecutive number for a WPS/PQR with one or a combination of welding processes and materials. If an essential and/or supplementary essential variable were to be changed within the same process and material, a new WPS would be qualified by assigning the next consecutive number in series (Ex: GT/1.1-1 without PWHT which is changed to GT/1.1-2 with PWHT). A consecutive WPS-No. may not be associated with the same consecutive number of a PQR, and vice versa (such as WPS-No. GT/1.1-2 and supporting PQR-No. GT/1.1-Q3).

Note 5: A WPS can also generate subsets (e.g., GT/51.51-2A and GT/51.51-2B, or GT/51.51-2WW for DuPont's Washington Works site). For changes to nonessential variables, all subsets of WPS's are generated only from a predesignated number. The addition of a consecutive letter indicates that a WPS nonessential variable has been changed, but remains within the limits of essential variables addressed by ASME IX. This creates two separate WPS documents used for different reasons and purposes without requalification. Note, all project specific WPS's are submitted to the GWE for review.

Note 6: A revision number is recorded on each page for any WPS/PQR change. Example, a change in the amperage range on GT/1.1-1A, Rev. 0 needs to be revised to Rev. 1 by assigning the next consecutive revision number.

Note 7: Welding procedures for special applications are assigned individually such as SM-CLAD/1.8-1, SM-TBR/3.3-1, and GT-Liner/8.44-1 (see 4.2.5).

4.2.5 As stated in paragraph 4.2.4, each WPS is coded by letter (also designated by the GWE) to indicate the welding process and/or special application. These letters are defined as follows:

BU - Buttering
CLAD - Cladding
ES - Electroslag
EG - Electrogas
FC - Semi-Automatic Flux Cored Arc Welding, Manual
FCM - Flux Cored Arc Welding, Machine
GT - Gas Tungsten Arc Welding, Manual
GTA - Gas Tungsten Arc Welding, Automatic
GTHW - Gas Tungsten Arc Welding, Hot Wire technique
GTM - Gas Tungsten Arc Welding, Machine
GTNG - Gas Tungsten Arc Welding, Narrow-Groove technique
GM - Semi-Automatic Gas Metal Arc Welding, Manual
GMM - Gas Metal Arc Welding, Machine
Liner - Liner
P - Plasma Arc Welding, Manual
S - Soldering
SAM - Submerged Arc Welding, Machine
SM - Shielded Metal Arc Welding
SW - Stud Welding, see Appendix 3
TBR - Temper Bead Repair
Rail - Railroad track welding

4.2.6 When prequalified status is not permitted by AWS codes, the following documents constitute an AWS qualified welding procedure:

a. AWS Welding Procedure Specification;

b. AWS Welding Procedure Qualification Record *

* For other than AWS prequalified status procedures

4.2.7 Each AWS qualified WPS (not prequalified WPS's) specifies the welding procedure qualification record (PQR) to be used as the supporting document.

4.2.8 Each qualified AWS WPS (does not apply to prequalified WPS's) is assigned a unique number to indicate the welding process, joint type, and weld penetration category. A consecutive number follows to identify a separate procedure using the same combination of welding process and weld penetration category. A minor variation in procedure is indicated by letter following the consecutive number. Only the GWE assigns a number to AWS qualified or prequalified WPS's. The GWE obtains a number from MK's list of AWS welding procedures. The format of this number is as follows:

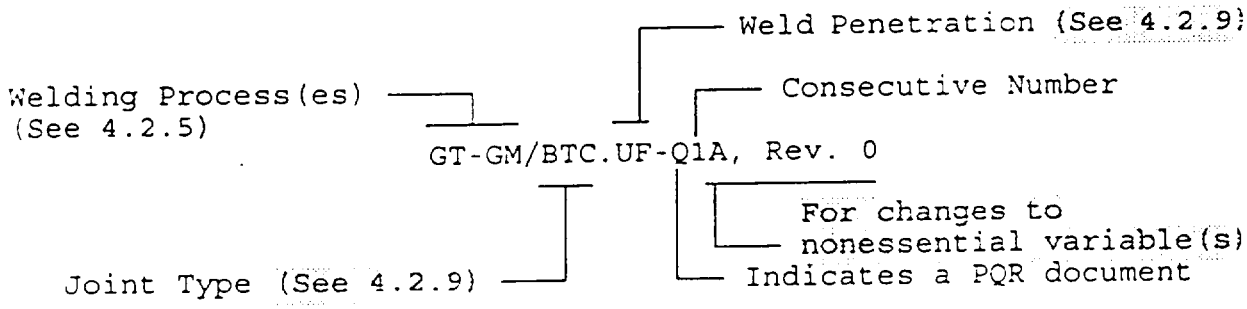

NOTE: A prequalified AWS WPS is identified as "PQWPS" followed by a consecutive number (Ex: PQWPS-3). Only the applicable page(s) of a PQWPS are used on production welds by the welder.

4.2.9 Each AWS qualified procedure is coded by letter and number to indicate the joint type and weld penetration in accordance with the following:

Joint Types

B - Butt
C - Corner
T - Tee
BTC - Butt, Tee, or Corner
K - Skewed
E - Edge
L - Lap

EXHIBIT 1
PAGE 10 OF 27 PAGE(S)

Weld Penetration

F - Full penetration
P - Partial penetration
U - Unlimited thickness
L - Limited thickness

4.2.10 When necessary, all variable entries on the WPS and PQR are addressed on welding documents with either "N/A", "None" or some other relevant comment to eliminate any concerns on the applicability of a variable towards a specific welding process. For example, when omitting the use of trailing gas, retainers, or pulsing current for the GTAW process, the variables are addressed as "none", not "N/A". Omission of variables is not acceptable.

4.3 Procedure Qualification

4.3.1 With assignment of the proposed WPS number by the GWE, the process for welding procedure qualification is authorized to proceed.

4.3.2 Since improper base/filler metals can significantly affect welding characteristics and the outcome of test results, an approved material supplier (selected by the GWE and PWR) should be used for welding procedure qualification. As a minimum, a material test report (MTR) for base metal and "C of C" for weld filler metal shall be obtained from the supplier of the material to confirm the supplier has supplied the materials specified by the purchase order.

4.3.3 Receipt inspection of base/filler metals is performed to ensure compliance to material/design specifications and to the requirements of the GWE/PWR by use of MK's purchase order or approved equal (for client controlled procurement via computers).

4.3.4 It is permissible to contract any or all of the work for the preparation of test coupons before welding provided MK accepts the responsibility for any such work. The facilities of non-MK organizations may be used with consent of the GWE. The welder can be either an MK employee or contracted by MK provided this individual is under the full supervision and control of the GWE/designee during welding of the test coupon.

4.3.5 Prior to start of welding, the actual thickness of the base metal in the area of the weld groove (e.g., the thinner section of a tapered pipe ID) is measured using either a calibrated measuring device (within a range of 3 to 4 decimal places) or ruler (to the nearest 1/32") to determine the actual thickness of the base metal.

4.3.6 The GWE supervises the welding of the test coupon. The GWE provides the skilled welder with a copy of the proposed WPS/PQDS, reviews the welding conditions with the welder, and ensure the welder has a full understanding of the requirements. All of the welding parameters on the proposed WPS/PQDS are to be complied with during welding of the test coupon.

4.3.7 The GWE may suspend the welding at any time the welder's performance or the welding process is unsatisfactory. The GWE may direct welding to be resumed when satisfied the required conditions are met.

4.3.8 The GWE ensures the actual data, as applicable, is recorded on the "Procedure Qualification Data Sheet (PQDS)". All data and requirements pertinent to the welding process are recorded on this form by the GWE. This form requires that data be recorded on a bead/pass by bead/pass basis (note that one or more beads/passes may create a single layer). Therefore, the full time presence of the recorder is required. When several PQR's are being qualified simultaneously, the recorder monitors the gathering of all data. When notch toughness testing is not required, data is recorded on pass/layer by pass/layer basis.

4.3.9 Measuring instruments used for monitoring data such as tong meters (or voltage and amperage meters), contact pyrometers, micrometers, and calipers (excluding pressure gauges used for welding gases) are calibrated in accordance with applicable requirements of the manufacturer and/or the National Institute of Standards and Technology (NIST). Measurement and Test Equipment (M&TE) is used on a continuous basis during welding of the test coupon.

4.3.10 Preheat and interpass temperatures are monitored using either a calibrated measuring instruments and/or temperature indicating crayons. Interpass temperature is defined as the highest temperature in the weld joint immediately prior to welding, or in the case of multiple pass welds, the highest temperature in the section of the previously deposited weld metal, immediately before the next pass is started.

4.3.11 When more than one process or filler metal is used to weld a test coupon, the actual deposited weld metal thickness of each process or filler metal is recorded. Reinforcement (root and cover pass) is not to be included for deposited thickness measurements. Deposited weld metal thickness is obtained by using a calibrated depth gage/indicator or ruler (to the nearest 1/32") to measure the distance from the crown of the weld bead to the base metal surface, and then subtract the measured value from the base metal thickness obtained in paragraph 4.3.5. Alternatively, verification of deposited weld metal thickness is performed to ensure the actual deposited thickness of each pass/layer does not exceed 1/2".

NOTE: For all welding processes (except GTAW), the thickness measurement of each pass/layer is required to verify that the actual deposited weld metal thickness did not exceed 1/2" (see QW-403.9), when heat input is controlled by volume of weld metal (see QW-409.1b), or for HFWMO/CRWMO (see QW-402.16). For GTAW, the thickness measurement of each pass/layer is not required.

4.3.12 When notch toughness requirements are imposed, heat input (kJ/in.) calculation is required for each bead. This is calculated as follows (Example: 54.6 kJ/in. obtained from 54,550 kJ/in.):

$$\frac{\text{VOLTS} \times \text{AMPS} \times 60}{1000 \times \text{TRAVEL SPEED (ipm)}} = \text{kJ/in. (nearest tenth)}$$

NOTE: The parameters (i.e., amp, volt and travel speed) used to calculate the maximum qualified heat input value is obtained from an area estimated to be (as close as reasonably achievable) in the area where the charpy-V notch specimen was removed.

4.3.13 At completion of a pipe test coupon welded in the 5G or 6G position, the GWE either physically marks the test coupon with a "T" to locate the top of the test coupon or marks the removal location of mechanical/metallurgical test specimens on the test coupon.

4.3.14 In addition to code requirements for testing procedure qualification test coupons, it is recommended that each test coupon needs to be examined by radiography. Nondestructive examination (NDE) is recommended to prevent the waste of testing cost on an unacceptable test coupon, and to verify continuity of the weld. This recommendation is made to avoid costly processing of mechanical test specimens and PWHT (when required). Specimen location is as required by the appropriate code requirements. Anticipated NDE (PT, MT, RT and/or UT) to be performed on production weldments should be implemented during procedure qualification. When nondestructive testing is to be used, the appropriate Articles and Standards of ASME Section V are followed.

4.3.15 When required, heat treatment of a test coupon is performed by either MK or a supplier in accordance with a heat treatment procedure approved by the GWE. The postweld heat treatment total soak time (t_{st}) at temperature is at least 80% of the maximum time ($.8t_{max}$) to be applied to the component weld material in production. Unless otherwise required by code or contract/design documents, the total PWHT soak time (t_{st}) at temperature applied to the test coupon is to be the greater of $3(.8t_{max})$ or 8 hours (see below for equation). The PWHT total soak time should be applied in one heating cycle. The PWHT strip charts shall be sent to the GWE with the test records for evaluation and record keeping.

Minimum PWHT soak time for WPS qual.: $t_{st} = 3(.8t_{max})$ or 8 hrs., whichever is greater.

4.4 Qualification of Test Specimens

4.4.1 Testing of specimens and certification of test results is performed by MK or an independent test laboratory selected from MK's Approved Suppliers List (ASL). Laboratories performing mechanical and/or metallurgical tests are identified on the PQR.

4.4.2 The GWE reviews the applicable requirements to ensure compliance, and establishes testing and specimen removal locations from the test coupon. The removal location of test specimens can be recorded on either the PQDS or described in the purchase order (PO). A copy of the PQDS and/or PO is retained with the test coupon for shipment to the test laboratory.

4.4.3 Procurement documents for heat treating, weld specimen removal, and weld specimen testing are to fully describe all applicable requirements in detail. When applicable, the purchase order identifies the areas of the weld where each different process or filler metal was used. A copy of the purchase order (including changer orders) used to obtain weld coupon test services is sent to the GWE for record retention.

4.4.4 The supplier is responsible for complying with the requirements of the purchase order. For instance, to ensure compliance with code intent and to properly obtain the nominal heat input requirements for charpy V-notch toughness testing (per SA-370, Fig. 11, Type A), the test laboratory shall be required (using any verifiable method) to describe the following on the test report:

a. The lateral expansion and absorbed energy;
b. The test temperature;
c. Cross-sectional dimensions of the Charpy V-notch specimen;
d. Circumferential and longitudinal specimen removal locations in the test coupon;
e. Cross-sectional (through thickness) specimen removal locations in the weld joint; and,
f. Cross-sectional Charpy V-notch orientation in the weld joint.

NOTE: For drop weight specimens, the tension surface of the specimen shall be required to be oriented parallel to the surface of the test weld assembly.

4.4.5 For drop weight and charpy V-notch toughness testing (QW-172 & 171, respectively), the results shall be reported in a test report. Notch toughness test machines shall be calibrated at least once per year using methods outlined in ASTM E23 and employing standard specimens obtained from the National Institute of Standards and Technology (NIST). Temperature measuring instruments used to control test temperature of specimens for drop weight and notch toughness testing shall be calibrated at least twice annually.

4.4.6 When WMZ and/or HAZ drop weight testing is required, the long side of the specimen and crack-starter weld bead (located at the center of the specimen) shall be oriented transverse to the longitudinal axis of the test coupon weld. The notch longitudinal axis (located at the center of the crack-starter bead length) shall be oriented parallel with the longitudinal axis of the WMZ or HAZ on the test coupon weld. Note, this procedure is not described by the ASME codes or ASTM specifications for WMZ and HAZ drop weight testing. All other locations and orientations described by ASME Section III NB/NC-2330 and ASTM E208 apply.

4.4.7 MK may either cut the qualification test specimens from the test coupon or contract this activity to the approved supplier that performs the testing of the specimens. Cutting of the test specimens is not performed with a thermal process, unless the specimens are submerged in a coolant during the cutting process, or a minimum of 1/8" of the cut surface is removed by mechanical methods. Machining of the test specimens is performed by the supplier providing the testing services.

4.4.8 The supplier is required to supply a "Certificate of Conformance", or provide a statement on the test report confirming compliance with the purchase order and code. The purchase order shall require that the signed original test data report be sent to the GWE. The GWE may request that test specimens be submitted for evaluation.

4.4.9 If the laboratory test report indicate failure to meet the applicable requirements of the code, the qualification process is restarted after evaluation and confirmation by the GWE.

4.5 <u>Preparation and Approval Cycle of a Successful Welding Procedure Qualification</u>

4.5.1 With receipt of the original test report(s) from the test laboratory [using the proposed WPS, Procedure Qualification Data Sheet (PQDS), actual test specimens and purchase orders, as applicable], the GWE certifies the PQR. It is the GWE's responsibility to select and record the appropriate data on the PQR. All variables are the actual variables (including ranges) used during the welding of the test coupons. If variables are not monitored during welding, they are not recorded. PQR's list essential, supplementary essential (when applicable), and appropriate nonessential variables.

4.5.2 When PWHT is required by the WPS, all mechanical testing records (for tensile, bend, C_v, and drop weight testing) shall indicated acknowledgment of PWHT activities on the test record.

4.5.3 Applicable essential, nonessential, and supplementary essential variables (when required by code for notch toughness testing) are described on the WPS and are within parameters established by the supporting Procedure Qualification Record(s) referenced on the WPS. The PQR does not have to reference all encompassing procedure specifications which a particular PQR is supporting.

4.5.4 Once the PQR is completed, the proposed WPS is also finalized to provide direction to welders or welding operators and to ensure compliance with the requirements. Other information may be included in the WPS that may be helpful in making production weldments. A WPS is considered finalized when the supporting PQR(s) is certified to meet the applicable requirements, and the GWE lists the applicable PQR number(s) on the WPS.

4.5.5 Paragraph 4.2.4 of this procedure describes the WPS numbering format. This same format is used to identify the applicable PQR with the exception that the last number is prefaced with the letter "Q" for qualification (ex: GT-SM/1.1-Q1) following the welding process(es) and material combination. The GWE numbers the PQR, and then signs/dates to indicate approval of the document.

4.5.6 WPS's and approved supporting PQR's are controlled and issued to projects by the GWE. Further distribution of these documents is determined at the project level. It is understood that only WPS's are made available to welders. ASME and AWS welding procedures are not transferred from one MK project to another, other than through the GWE.

4.5.7 If the welding procedure is accepted and passes the testing requirements, the welder who welds on the procedure qualification test coupon is qualified (usually limited qualification) within the range of essential variables established during procedure qualification.

4.6 <u>Changes to a WPS and PQR</u>

4.6.1 Changes to a PQR are substantiated with supportive documentation. Changes to a WPS and PQR (i.e., editorial/typographical errors) requires a revision. All previous revisions to WPS's/PQR's (when possible) are maintained on file for future reference.

4.6.2 PQR's are MK corporate level documents and records of historical events, and therefore are not subject to change at the project level. This also applies to PQR and WPS numbering formats. Project specific changes to PQR may be requested from the GWE and, if the proposed changes are acceptable to the GWE, the PQR is revised by the GWE. If the PWR is designated by the GWE to perform PQR revisions, the revised PQR is submitted to the GWE (by the PWR) for inclusion in corporate files.

4.6.3 WPS's are subject to change at the project level to meet project specific needs. Often projects will develop WPS's where the variables have narrower ranges than allowed by the supporting PQR and originating WPS to reduce the risk of exceeding PQR allowables during field welding (see 4.2.4, Note 6). Upon request by the GWE, the projects will send copies of all revised MK WPS's to the GWE for inclusion in corporate files for future reference.

4.6.4 No permanent changes are made to nonessential variables without either revision of the WPS or generation of a new subset WPS. If a change to a nonessential variable is needed for a particular scope of work, a new subset WPS can be generated by adding a consecutive letter at the end of the WPS-No. (Example: GT-SM/1.1-1 to GT-SM/1.1-1A; see 4.2.4, note 5). A consecutive WPS number change is only made when qualifying an entirely new procedure because of changes in essential and/or supplementary essential variable(s). All changes (includes editorial changes and correction of typographical errors) require revision of the WPS. Changes to essential and/or supplementary essential variables without qualification is prohibited.

EXHIBIT 34
PAGE 45 OF 127 PAGE(S)

5.0 RECORDS

5.1 Corporate Records

5.1.1 The originating WPS, PQR and related documents (see below), and all subsequent revisions or changes to the PQR and/or WPS are considered corporate "Quality Records". These records are processed and stored in accordance with the Quality Program. The following documents, where they exist, are attached to, and form a part of, the final PQR to be retained and filed in the corporate vault by the GWE:

a. Documentation on the base and filler metal(s) used to make the test coupon such as CMTR, "C of C", MSDS, filler metal storage/drying conditions, filler metal manufacturer's amperage and voltage recommendation, etc...

b. PWHT records and/or strip charts,

c. Laboratory test records describing testing methods (e.g., tensiles, bends, charpy V-notch, delta ferrite, and chemical analysis) and results, and

d. Nondestructive and destructive testing records on all tests made during and after completion of the test coupon.

5.1.2 The PQDS and purchase orders related to materials and services are the responsibility of the GWE. These records are stored in MK's corporate vault for information only.

5.2 Project Records

5.2.1 The originating WPS, PQR and related documents (see 5.1.1a-d), and all subsequent revisions or changes to the PQR and/or WPS qualified on a project are considered corporate "Quality Records". In addition, these records are processed and stored in accordance with the project's Quality Program and the original records are submitted to the GWE. If a corporate WPS is not used on a project, the corporate WPS is not considered a "Quality Record".

5.2.2 At the end of all projects (includes all nuclear projects), one copy of all ASME/AWS project specific WPS's and PQR's are submitted to the Client.

5.2.3 For non-nuclear projects (not within the scope of ASME Section III, Div. 1), the original job specific WPS's and PQR's, with all revisions, are sent to the GWE. For non-nuclear projects, the GWE may elect to use MK's warehouse document storage for 7 year retention.

5.2.4 At the end of a nuclear project, ASME Section III related WPS's and PQR's are submitted to MK's corporate Quality Management Department (QMD) for storage in the vault as lifetime retention.

6.0 REFERENCES

None

7.0 REFERENCED FORMS AND EXHIBITS

Later Date - Sample Purchase Requisitions for procurement of materials and services
Later Date - QTS-W-003-1 thru 3 - Procedure Qualification Data Sheet (PQDS)

NOTE: See the "QAI Forms" section of this QAI manual for the above form and exhibits.

1.0 SCOPE

This Quality Execution Procedure (QEP) establishes the requirements for the preparation, qualification, and issuing of Welding Procedure Specifications (WPS) in accordance with ASME and AWS codes.

2.0 RESPONSIBILITIES

2.1 Group Welding Engineer (GWE)

The GWE (Corporate Level) is responsible for qualification and approval of all new ASME Procedure Qualification Records (PQR) that are developed for use at the site level prior to their use. The GWE is also responsible for supplying PQR's to the site that have been previously qualified. The GWE may delegate the responsibility for qualification to the Project Welding Engineer (PWE).

2.2 Project Welding Engineer (PWE)

The PWE/Designee is responsible for all activities associated with the preparation, qualification, and issuing of AWS WPS's, and for qualification of ASME WPS's as delegated by the GWE.

3.0 DEFINITIONS

3.1 General Welding Terms

Unless otherwise specified in this document, welding terms and definitions are in accordance with:

a. AWS A3.0 - "Standard Welding Terms and Definitions".
b. ASME Section

3.2 Certificate of Compliance (C of C)

A C of C is a written statement attesting that the supplied items or services meet the specified requirements.

3.3 Certified Material Test Report (CMTR)

A CMTR is a written and signed document that contains sufficient data and information to verify the actual properties of items and the actual results of all required testing and examinations.

3.4 Prequalified WPs

A Prequalified WPS is one as identified by AWS D1.1 paragraph 5.1

3.5 Procedure Qualification Record (PQR)

A PQR is the document providing the actual essential welding variables used to produce an acceptable test weld and the results of tests conducted on the weld to qualify a WPS.

3.6 Test Coupon

A test coupon is a weldment for procedure or performance qualification testing. The coupon may be any product from plate, pipe, tube, etc.

3.7 Test Specimen

A test specimen is a sample taken from a test coupon for a specific test.

3.8 Welding Procedure Specification (WPS)

A WPS is a document providing in detail the required variables required for various welding applications to assure repeatability by properly qualified welders or welding operators.

4.0 INSTRUCTIONS

4.1 Preparation for the Qualification of Welding Procedure Specification's

4.1.1 The PWE/s Designee shall identify all of the required WPS's needed for the total scope of work to support the SGRP, and shall contact the GWE to determine the availability of existing PQR's.

4.1.2 The GWE shall transmit to the site those PQR's that are currently qualified. For those ASME PQR's that require qualification, the GWE will perform the qualification required or delegate that responsibility to the PWE/Designee. If the qualification is delegated to the PWE/Designee, the GWE will provide the draft WPS number and the PQR number that will be qualified.

4.1.3 Using the WPS and PQR numbers supplied by the GWE, the PWE/Designee may draft a proposed Welding Procedure Specification (WPS) identifying all essential, supplementary essential (when required), and nonessential variables that would apply to the proposed process(s). When selecting information to be entered, the applicable code, standard, and any special contract imposed requirements must be addressed.

4.2 Procedure Qualification

4.2.1 The facilities of non Morrison Knudsen (MK) organizations may be used provided that the welder performing the progress is under the full supervision and control of MK personnel during the production of the test weldments.

4.2.2 At the start of procedure qualification, the PWE/Designee shall provide the welder/welding operator with a copy of the proposed WPS, review the WPS with the welder/welding operator, and assure that the welder/welding operator has a full understanding of the requirements. Welders/welding operators used to produce test weldments for qualification of welding procedures shall be under the full supervision and control of the PWE during the production of test weldments.

4.2.3 Prior to start of welding and during actual welding all pertinent variables shall be measured and recorded on the PQR Form by the PWE/Designee..

4.2.4 Measurement instruments used for data collection and monitoring of welding parameters shall be calibrated in accordance with the requirements of QEP 14.2 "Control of Measuring and Test Equipment".

4.2.5 The PWE/Designee may suspend the welding at any time the welder's performance or the welding process is unsatisfactory. The PWE/Designee may direct welding to be resumed when satisfied the required conditions will be met.

4.3 Qualification Testing of Test Specimens

4.3.1 Testing of specimens and certification of test results shall be performed by an independent test laboratory selected from the MK Approved Supplier List (ASL).

4.3.2 The supplier of testing services shall be required to supply a Certified Test Report, signed by an authorized representative, confirming compliance to the requirements of the purchase order and Code, and that traceability of the test specimens has been maintained. The purchase order shall require that the signed original test data report be sent to the PWE.

4.3.3 Using the acceptable test results, the PWE/Designee sends all PQR data to the GWE to complete and approve the PQR.

4.3.4 Once the GWE has approved the PQR and transmitted it to the project, the PWE/Designee shall prepare the project level WPS.

4.4 Site Approval and Issue of WPS's

4.4.1 Site approval of the WPS shall be obtained prior to issue of the WPS by the PWE/Designee, PQM, and WE. The ANI shall review and approve all ASME WPS's. Approval of the WPS shall be documented on the WPS Cover Sheet (Form QEP 20.2-1). Issue and control of the WPS shall be in accordance with QEP 8.1 (Document Control), with the WPS's being distributed into a controlled "Welding Procedure Specification" manual.

4.4.2 When the WPS has been approved by the PWE/Designee and PQM it may be used for qualification of welders and welding operators. Full Approval by the ANI and WE is required prior to the use of a WPS on any permanent plant system, structure, or component..

4.5 Changes to WPS/PQR

4.5.1 WPS's can be revised if the change involves a change to non-essential variables and changes that do not violate essential variables shown on the PQR.

4.5.2 PQR's may only be changed for editorial purposes. All other changes would require requalification.

4.5.3 Revisions to the WPS or the PQR shall be incorporated in accordance with QEP 8.1 (Document Control)

4.5.4 Any changes made to a WPS or PQR must go through the same signature requirements of the original document.

4.6 Use of Prequalified AWS WPS's

4.6.1 Prequalified WPS's, may be prepared and issued without qualification provided all of the requirements of AWS D1.1 Section 5.1 have been met.

4.7 Records

4.7.1 WPS's and PQR's are considered QA records and processed in accordance with QEP 17.1 "Quality Assurance Records".

5.0 REFERENCED FORMS

a. QTS-W-001 - ASME IX Welding Procedure Specification (WPS)
b. QTS-W-002 - ASME IX Procedure Qualification Record (PQR)
c. QEP 20.2-1 - WPS Approval Cover Sheet
d. QEP 20.2-2 - AWS Welding Procedure Specification (WPS)

6.0 REFERENCES

Codes/Standards/Specifications:

a. ASME Section III 86 Edition No Addenda
b. ASME Section IX 95 Edition No Addenda
c. AWS D1.1 1994 Edition
d. AWS D1.3 1981 Edition

7.0 CONCURRENCE BY:

7.1 **Project Welding Engineer**

Signature: Paul R Evans for ECG Date 10/25/96

7.2 **Design Engineering/Licensing Manager**

Document Transmittal No.: T-96-5554 Approval Status G Date 10/28/96

7.3 **Client**

Document Transmittal No.: T-96-5276 Approval Status G Date 10/27/96

EXHIBIT

PAGE 55 OF 127 PAGE(S)

10CFR50 APPENDIX B AND ASME NQA-1 QUALITY ASSURANCE PROGRAM

ASSESS

EXECUTE

IMPROVE

PLAN

MORRISON KNUDSEN CORPORATION
1500 WEST 3RD STREET, CLEVELAND, OHIO
Quality Management Department

EXHIBIT 34
PAGE 34 OF 127 PAG

CASE NO 3-97-013

MORRISON KNUDSEN CORPORATION
1500 West 3rd Street, Cleveland, OH 44113

MORRISON KNUDSEN CORPORATION

1500 West 3rd Street
Cleveland, Ohio 44113-1406

10CFR50 APPENDIX B
AND
ASME NQA-1
QUALITY ASSURANCE PROGRAM

SET I.D. NUMBER: 004

ISSUED TO: ALAIN ARTAYET

MORRISON KNUDSEN CORPORATION

DATE ISSUED: 18-JAN-95

Issued and maintained by the Group Quality Director at the above address.
Manual is "Controlled" only if Set I.D. No. is indicated in red on Cover and Table of Contents.

MORRISON KNUDSEN CORPORATION
1500 West 3rd Street, Cleveland, OH 44113

Quality Assurance Program
10CFR50 / NQA-1

TABLE OF CONTENTS

SET I.D. NUMBER: 004

Second Issue, Initial Distribution Date 30-Jun-94

Section No.	Section Title	No. of Pages In Section	Section Revision
N/A	COVER PAGE	1	19-Jan-96
0.1	TABLE OF CONTENTS (Previous Rev. 19-Jan-96)	1	01-Jul-96
0.2	POLICY STATEMENTS	3	19-Jan-96
0.3	ORDER ENTRY	2	19-Jan-96
1.0	ORGANIZATION	4	01-Jul-96
2.0	QUALITY ASSURANCE PROGRAM	4	19-Jan-96
3.0	DESIGN CONTROL	6	19-Jan-96
4.0	PROCUREMENT DOCUMENT CONTROL	2	30-Jun-94
5.0	INSTRUCTIONS, PROCEDURES, AND DRAWINGS	1	30-Jun-94
6.0	DOCUMENT CONTROL	2	30-Jun-94
7.0	CONTROL OF PURCHASED ITEMS AND SERVICES	8	30-Jun-94
8.0	IDENTIFICATION AND CONTROL OF ITEMS	2	30-Jun-94
9.0	CONTROL OF PROCESSES	2	19-Jan-96
10.0	INSPECTION	5	19-Jan-96
11.0	TEST CONTROL	5	19-Jan-96
12.0	CONTROL OF MEASURING AND TEST EQUIPMENT	2	30-Jun-94
13.0	HANDLING, STORAGE, AND SHIPPING	1	30-Jun-94
14.0	INSPECTION, TEST, AND OPERATING STATUS	1	30-Jun-94
15.0	CONTROL OF NONCONFORMING ITEMS	2	19-Jan-96
16.0	CORRECTIVE ACTION	2	20-Dec-94
17.0	QUALITY ASSURANCE RECORDS	7	30-Jun-94
18.0	ASSESSMENTS	6	30-Jun-94

This Manual revision is approved for use:

Group Quality Director — Date: 7-1-96

E01

MORRISON KNUDSEN CORPORATION
1500 West 3rd Street, Cleveland, OH 44113

Quality Assurance Program 10CFR50 / NQA-1

POLICY STATEMENTS

DEFINITION OF "QUALITY"

Quality is understanding the needs of the customer, meeting the requirements agreed upon with the customer, and satisfying the expectations (both stated and unstated) of the customer. Quality is attained through a systematic approach to the planning, execution, and completion of the work. Realistic scheduling and budgeting, accurate cost control, objective assessment and reporting of performance, and a commitment to improvement are all integral parts of a "quality" job.

QUALITY POLICY

Morrison Knudsen is committed to meeting the requirements and expectations of the customer and to continuously improving the quality of its products and services. We will reach this objective through teamwork, training, planning, open communication, and attention to detail. All employees are encouraged to recognize their responsibilities to achieve this objective, to be alert to opportunities to improve quality, and to take the initiative to effect change.

T. H. Zarges
President and CEO
Morrison Knudsen Corporation
Engineering and Construction Group

EXHIBIT 34
PAGE 57 OF 127 PAGE(S)

PROGRAM APPLICATION POLICY STATEMENT

This Quality Assurance Program is hereby established at Morrison Knudsen Corporation, 1500 West 3rd. Street in Cleveland, Ohio. Its purpose is to assure compliance with the requirements of both the Code of Federal Regulations, Title 10, Part 50, Appendix B and ASME NQA-1. The Program is described in this Quality Assurance Manual.

Applicability of 10CFR50 Appendix B or ASME NQA-1 is defined by contract requirements established by our clients. Division Executives holding such contracts are hereby given the responsibility and authority to establish the necessary organization to implement the Quality Assurance Program. The Division Executive has primary responsibility for ensuring quality is built into the work. The Division Executive is also responsible for assisting the Group Quality Director in continuously improving the management system described in this Manual through the identification of changes which would improve the management system.

The Group Quality Director is hereby given the responsibility and authority to maintain the Quality Assurance Program and assure its implementation. Further, the Group Quality Director is given the organizational freedom to identify quality assurance problems, initiate actions which result in solutions, and verify implementation of solutions to those problems. The Group Quality Director has the authority to halt the work when necessary to meet applicable contract requirements.

As President, I have the responsibility and authority to resolve any conflicts which cannot be resolved by the Group Quality Director and the Division Executive. Such resolution shall not conflict with design and contract requirements.

Tom Zarges

T. H. Zarges
President and CEO
Morrison Knudsen Corporation
Engineering and Construction Group

EXHIBIT
PAGE OF 127 PAGE(S)

DOC NO E-97-013

RESPONSIBLE OFFICER DESIGNATION LETTER

MORRISON KNUDSEN CORPORATION
ENGINEERING, CONSTRUCTION
& ENVIRONMENTAL GROUP

MK-FERGUSON PLAZA
1500 WEST 3RD STREET
CLEVELAND, OHIO 44113-1406
PHONE (216) 523-3777
FAX (216) 523-6146

THOMAS H. ZARGES
PRESIDENT & CEO

January 19, 1996

Reporting of Defects and Noncompliances:

In accordance with the requirements of Title 10 Code of Federal Regulations, Part 21 (10CFR21), Mr. T. H. Zarges, President and CEO of Morrison Knudsen Corporation, Engineering and Construction Group, is hereby designated the "Responsible Officer" for Morrison Knudsen Corporation. A copy of this letter will be placed in the appropriate Morrison Knudsen Corporation Quality Program Manuals.

In accordance with 10CFR21, Section 21.21(c)(5), and effective this date, Mr. A. J. Walcutt, MK Group Quality Director, is authorized to act in my behalf as the "Responsible Officer" for Morrison Knudsen Corporation, Engineering and Construction Group.

T. H. Zarges
Morrison Knudsen Corporation
Engineering and Construction Group

cc: L. Pardi

E02

EXHIBIT 34
PAGE 33 OF 147 PAGE(S)

0.3 ORDER ENTRY

0.3.1 Scope

This Section addresses the Morrison Knudsen Corporation, Engineering, Construction and Environmental Group at 1500 West 3rd. Street in Cleveland, Ohio (hereafter referenced to as MK) receipt of the bid specification, preparation of the bid, and receipt of the client contract.

0.3.2 Requirements

0.3.2.1 Review of Bid Specification

0.3.2.1.1 The bid specification and associated documents are, as a minimum, issued to the Group Quality Director (GQD).

0.3.2.1.2 The Group Quality Director reviews the bid specification to identify the scope of work being bid, schedule milestones, applicable quality assurance program requirements (10CFR50 Appendix B or NQA-1), and technical requirements that must be verified to demonstrate that quality is achieved. As a result of this review, a written quality plan, that describes how quality will be managed, is developed and provided for inclusion in the proposal.

0.3.2.1.3 Submittal of the MK proposal is approved by the Division Executive. The Division Executive ensures that the Quality Plan has been included in the proposal.

0.3.2.2 Receipt of the Client Order

0.3.2.2.1 Upon award of contract, a Project Director/Site Project Manager (PD/SPM) is appointed by the Division Executive. The PD/SPM is provided copies of the bid specification, the proposal, and the client order. Unpriced copies of these documents are maintained in the project files.

0.3.2.2.2 The PD/SPM assures that the order is in agreement with the bid package. The Group Quality Director also reviews the order to verify that the quality requirements are correctly stated and are agreed to by MK. If the order is found to be acceptable, the PD/SPM and key personnel start the project.

0.3.2.2.3 If there are differences between the client order and the bid package, the client order shall be reviewed as shown in Paragraph 0.3.2.1.

EXHIBIT 3Y
PAGE 6-2 OF 127 PAGE(S)

0.3.2.3 Client Order Changes

Changes to the client order are received at the project level by the PD/SPM. Change Orders are reviewed by the PD/SPM. In the event the Change Order deletes functions described in the Project level Quality Program, or functions described in this Manual are added, the Change Order shall be reviewed by the Project Quality Manager. Any comments are submitted to the PD/SPM for resolution. Approval of the Change Order is by the PD/SPM. A copy of the Change Order is retained in the project files.

E03

EXHIBIT 31
PAGE 41 OF 127 PAGE(S)

1.0 ORGANIZATION

1.1 Scope

This section describes the requirements for the duties, responsibilities, and authorities for establishment and execution of the MK 10CFR50 Appendix B / NQA-1 Quality Assurance Program.

1.2 Requirements

1.2.1 General

1.2.1.1 MK organizational structure and responsibility assignments are such that quality is achieved and maintained by those who have been assigned responsibility for performing the work.

1.2.1.2 Quality achievement is verified by personnel not directly responsible for performing the work.

1.2.1.3 Management periodically assesses their operations to identify ways to improve quality. Such assessments, and the resulting actions, shall be documented to permit evaluation of the effectiveness of these actions.

1.2.1.4 Independent assessments, or audits, are conducted by the Quality Management Department in accordance with Section 18.0 of this Manual, "Assessments".

1.2.1.5 Senior Management assures that an effective assessment process is implemented.

1.2.1.6 The specific duties, responsibilities, and authorities for personnel performing quality-affecting activities at the corporate office and at the projects are augmented in corporate and project procedures or instructions.

1.2.2 Responsibilities

1.2.2.1 The MK Group Quality Director (GQD) has direct access to responsible management at a level where appropriate action can be affected. The GQD reports to a management level such that required authority and organizational freedom are provided, including sufficient independence from cost and schedule considerations.

1.2.2.2 The Group Quality Director has the overall responsibility and authority for the administration of all quality program-related activities of this Manual for MK.

1.2.2.3 The Project Quality Manager (PQM) is responsible for implementation of this Quality Assurance Program at the project level. The PQM represents the project as primary spokesperson on matters relating to the Quality Assurance Program, including formal communications with the client. The PQM also is responsible for verifying that activities affecting quality have been correctly performed and has sufficient authority, access to work areas, and organizational freedom to:

a. identify quality problems;

b. initiate, recommend, or provide solutions to quality problems through designated channels;

c. identify the need for corrective action;

d. verify implementation of solutions and corrective actions;

e. assure that further processing, delivery, installation, or use of items or services are controlled until proper disposition of a nonconformance, deficiency, or unsatisfactory condition has occurred;

f. halt work; and,

g. sign off Certificates of Compliance/Conformance when required.

1.2.3 Multiple Organizations

1.2.3.1 In situations where organizations other than MK are involved in the execution of activities governed by the requirements of this Quality Assurance Program, the responsibility and authority of such organizations are clearly established and documented.

1.2.3.2 MK may delegate to others (subcontractors, consultants, etc.) the work of establishing and executing certain portions of the Quality Assurance Program but shall retain responsibility therefore. Such delegation shall be in writing.

1.2.3.3 External interfaces between organizations (outside MK) and the internal interfaces between organizational units (within MK) and any changes thereto shall be documented. All interface responsibilities are defined and documented.

EXHIBIT 37
PAGE 63 OF 127 PAGE(S)

NO 3-97-013

1.2.4 Corporate and Project Functional Responsibilities

1.2.4.1 Corporate activities described in this Manual involve bid specification review and proposal development, appointment of the Project Director or Site Project Manager as applicable, administration of the Corporate Quality, Welding and NDE programs, maintenance of the Approved Supplier's List, periodic assessments of program compliance, management reviews and maintenance of Corporate QA Records. Work is performed under the direction of a Project Director when the assigned scope involves only fabrication or installation. When the assigned scope involves only fabrication and installation, work may be performed under the direction of either a Project Director or Site Project Manager.

1.2.4.2 When MK is responsible only for fabrication or installation, in accordance with a design supplied by the Client, then any necessary management functions normally performed by the Project Director may be performed by the Site Project Manager and engineering functions normally performed by the Design Engineering/Licensing Manager may be performed by the Construction Engineering Manager.

1.2.4.3 The organization shown in this Section identifies the basic organizational positions and reporting relationships. Project level organization procedures and charts are consistent with this Section, while providing additional details based on the Project's actual scope of work.

1.2.5 Organization Chart

The organization established for the implementation of the Quality Assurance Program at MK is illustrated on the following page. At the project level, the organization shown may be changed to address the project's scope of work. Only positions performing functions described in this manual have to be described in the project's procedures.

EXHIBIT 31
PAGE 41 OF 127 PAGE(S)

EXH. NO. 7-97-013

MORRISON KNUDSEN CORPORATION
1500 West 3rd Street, Cleveland, OH 44113

Quality Assurance Program
10CFR50 / NQA-1

ORGANIZATION

Morrison Knudsen Corporation
1500 West 3rd. Street

Organization Chart

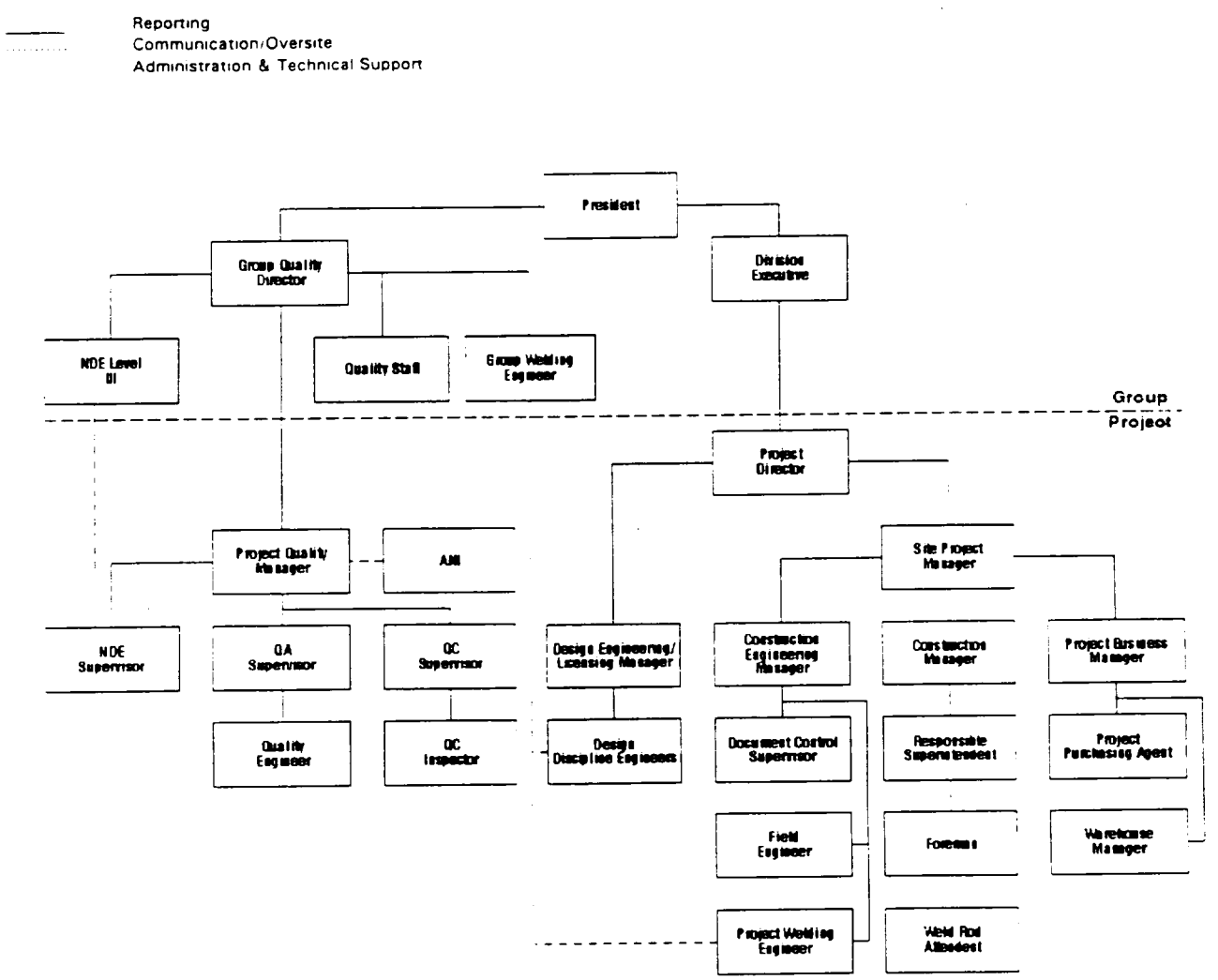

EXHIBIT 39
PAGE 5 OF 127 PAGE(S)

2.0 QUALITY ASSURANCE PROGRAM

2.1 Scope

This section describes the MK 10CFR50 / NQA-1 Quality Assurance Program. The basic requirements of this Quality Assurance Program are delineated in this Manual. Detailed specifics for implementation and appropriate forms are documented in implementing procedures or instructions. Where the terms Quality Assurance Program, Quality Assurance Manual, and QA Manual are used in this Manual, they will mean the MK 10CFR50 / NQA-1 Quality Assurance Program.

2.2 Applicability

The requirements contained in this Quality Assurance Manual are applicable to all safety-related work conducted by MK which is governed by 10CFR50 Appendix B or covered under ASME NQA-1. In addition, and when required by contract, all requirements of ANSI Standard N45.2 and its associated daughter documents (as applicable per contract) shall be adhered to and controlled via this Manual and associated implementing procedures and instructions.

2.3 Requirements

2.3.1 General

2.3.1.1 This Manual and the implementing procedures or instructions shall, as a minimum, provide for the following:

a. Identification of the activities and items to which the program applies;

b. Consideration of the technical aspects of the activities affecting quality;

c. Control over activities affecting quality to an extent consistent with their importance;

d. Planning and accomplishment of activities affecting quality under suitably controlled conditions (including the use of appropriate equipment and suitable environmental conditions for accomplishing the activity), and assurance that prerequisites for the given activity have been satisfied;

e. Any special controls, processes, test equipment, tools, and skills needed to attain the required quality and for necessary verification of quality, such as by inspection or test;

EXHIBIT 39
PAGE 6 OF 127 PAGE(S)

f. Indoctrination and training, as necessary, of personnel performing activities affecting quality to assure that suitable proficiency is achieved and maintained; and,

g. Assessment of the adequacy of the Quality Assurance Program by management of those organizations implementing the program to assure effective implementation.

2.3.1.2 Management of other organizations participating in the Quality Assurance Program shall regularly review the status and adequacy of that part of the program for which they are responsible.

2.3.2 Management Reviews

2.3.2.1 Management reviews are performed to verify and evaluate the status and effectiveness of the QA program. Management reviews are performed through a review of internal and external assessment results, specified corrective actions, and the results of reassessment verifications.

2.3.2.2 Management reviews are the responsibility of the Group President and CEO. Management reviews are conducted on an annual or more frequent basis and are documented by a formal report signed by the Group President and CEO.

2.3.3 Training of Quality-Affecting Personnel

2.3.3.1 Personnel performing or managing activities affecting quality (such as designing, purchasing, fabricating, handling, shipping, storing, cleaning, erecting, installing, inspecting, testing, operating, maintaining, repairing, and modifying) shall be identified and given indoctrination and training. The extent of indoctrination and training shall be commensurate with the following:

a. the scope, complexity, and nature of the activity; and,

b. the education, experience, and proficiency of the person.

2.3.3.2 Indoctrination shall include the following subjects as they relate to a particular function:

a. general criteria, including applicable codes, standards, and company procedures;

b. applicable QA Manual elements; and,

c. job responsibility and authority.

EXHIBIT 34
PAGE 47 OF 127 PAGE(S)

2.3.3.3 Training shall be provided, if needed, to:

a. achieve initial proficiency;

b. maintain proficiency; and,

c. adapt to changes in technology, methods, or job responsibilities.

2.3.3.4 Records of the implementation of indoctrination and training shall be established and maintained and may take the form of:

a. attendance sheets;

b. training logs; or,

c. personnel training records.

2.3.4 Certification

2.3.4.1 In addition to training, those performing special processes, inspections, tests, and assessments shall be qualified and certified.

2.3.4.2 Qualification and certification shall be performed in accordance with written procedures that conform to the applicable standards and this Manual.

2.3.5 QA Manual Control

2.3.5.1 The Group Quality Director is responsible for the approval of the QA Manual and its revisions.

2.3.5.2 The QA Manual is reviewed annually, or more frequently, to assure that the Manual is current and that no conflicts exist between the Manual and MK procedures.

2.3.5.3 The Group Quality Director maintains a listing of the Controlled Manual Holders. Holders of uncontrolled manuals receive a copy of the Manual that is current at the time of issue, but will not receive subsequent revisions to the Manual. Holders of controlled Manuals automatically receive future revisions to the Manual. The cover sheet of the Manual is marked to indicate whether it is controlled or uncontrolled.

EXHIBIT 34
PAGE 43 OF 127 PAGE(S)

2.3.5.4 The Controlled Manual Holder acknowledges receipt of the QA Manual and revisions, and certifies that the Manual contents are in agreement with the Table of Contents page by signing the Document Transmittal. The Controlled Manual Holder destroys the obsolete pages. If the Document Transmittal form is not returned within 10-working days within MK, and 40-working days outside MK, the Group Quality Director takes follow-up measures to assure the Document Transmittal form is returned within an additional 5-working days within MK, and 20-working days outside MK. In the case of personnel external to MK, the Group Quality Director redesignates their controlled Manual as uncontrolled if they do not respond to the follow-up action.

2.3.5.5 This Manual is revision-controlled by Section and Date. All pages of the Section are replaced when it is revised and the new revision date is indicated on each page. The latest text changes are highlighted (by shading, as shown here).

2.3.5.6 The Table of Contents page of this Manual indicates the revision date of the Manual and of each Section of the Manual. Each time the Manual is revised, the Table of Contents revision date is changed to reflect the current date, along with the revision dates for any Sections that were changed. The date of the previous revision of the Table of Contents page is also indicated.

~~(deletion)~~

2.3.6 Project Addenda (Supplement)

When contractual commitments require addenda to this Manual that are unique to a specific project, they are issued as Project Addenda, and are prepared, approved, and issued in the same manner as the Manual. Project Addenda are identified to a specific project by using colored paper. Only one color paper is issued for a specific project. No two projects in progress concurrently shall have the same Project Addenda color. Distribution of this document is limited to the applicable Project Quality Manager, and those designated by the Project Quality Manager.

2.3.7 Project Addenda Manual

For reasons of clarification or due to contractual commitments, a project addenda manual may be issued by the Group Quality Director at the request of the Project Quality Manager. The project addenda manual is a complete manual which is issued and controlled in the same manner as described in paragraph 2.3.5, except it is not required to be updated to current Code addenda. The relationship to contractually required Code Edition and Addenda is described in the project addenda manual. Distribution of this document is limited to the applicable Project Quality Manager, and those designated by the Project Quality Manager.

E2

EXHIBIT 34
PAGE 67 OF 127 PAGE(S)

DOCKET NO. 3-97-013

3.0 DESIGN CONTROL

3.1 Scope

This section describes the requirements for control of design activities including MK design or interfaces with a design subcontractor, review and control of the design specification or client specification, and preparation of design drawings and/or specifications. Specific implementing procedures shall be developed as necessary to describe the means of control for individual activities.

3.2 Requirements

3.2.1 Responsibilities

3.2.1.1 The Project Director appoints a Design Engineering/Licensing Manager (DE/LM) who is experienced with the nuclear design process. The DE/LM in turn is responsible for control of design work performed by MK.

3.2.1.2 When MK is responsible for the design, the DE/LM is responsible for assuring that applicable design inputs, such as design criteria, performance requirements, regulatory requirements, and codes and standards are identified, documented, and their selection reviewed and approved. Changes from approved design inputs, including the reason for the changes, shall be identified, approved, documented, and controlled.

3.2.1.3 MK may subcontract the design work, but retains the overall responsibility for the design. "Subcontracted Design" means design is performed in accordance with the subcontractor's QA Program that has been reviewed and approved in accordance with Section 7, and the subcontractor is on MK's ASL.

3.2.2 Control of the MK Controlled Design Process

3.2.2.1 Design Engineering shall prescribe and accomplish design activities in accordance with MK approved procedures to assure that applicable design inputs are correctly translated into specifications, drawings, procedures, or instructions.

3.2.2.2 Design Engineering shall identify and document the appropriate quality standards to be included in the design. The standards selected shall be reviewed and approved by the Project Quality Manager.

3.2.2.3 Changes from approved quality standards, including the reasons for the changes, shall be identified, documented, controlled, and approved at the same level as the original approval.

EXHIBIT 37

3.2.2.4 The selection of design methods, materials, parts, equipment, and processes that are essential to the function of the structure, system, or component shall be reviewed for suitability of application.

3.2.2.5 Design activities are controlled to permit reviewing, checking, or verifying the results of the activity by personnel who are experienced in the subject activity.

3.2.2.6 The final design (approved design output documents and approved changes) shall:

a. be relatable to the design input by documentation in sufficient detail to permit design verification; and,

b. identify assemblies and/or components that are part of the item being designed. When such an assembly or component part is a commercial grade item that, prior to its installation, is modified or selected by special inspection and/or testing to requirements that are more restrictive than the supplier's published product description, the component part shall be represented as different from the commercial grade item in a manner traceable to a documented definition of the difference.

3.2.2.7 Design analyses shall be performed in a planned, controlled, and documented manner. Design analyses documents shall be detailed as to purpose, method, assumptions, design input, and references such that a person technically qualified in the subject can review and understand the analyses and verify the adequacy of the results without recourse to the originator. Calculations shall be identifiable by subject (including structure, system, or component to which the calculation applies), originator, reviewer, and date, or by other data such that the calculations are retrievable.

3.2.2.8 Documentation of design analyses shall include:

a. definition of the objective(s) of the analyses;

b. definition of design inputs and their sources;

c. results of literature searches or other background data;

d. identification of assumptions and indication of those that must be verified as the design proceeds;

e. identification of any computer calculation, including computer type, computer program (e.g., name), revision identification, inputs, outputs, evidence of or reference to computer program verification, and the bases (or reference thereto)

supporting application of the computer program to the specific physical problem; and,

f. review and approval.

3.2.3 Computer Programs

3.2.3.1 Computer programs may be utilized for design analysis without individual verification of the program for each application provided:

a. the computer program has been verified to show that it produces correct solutions for the encoded mathematical model within defined limits for each parameter employed; and,

b. the encoded mathematical model has been shown to produce a valid solution to the physical problem associated with the particular application.

3.2.3.2 Computer programs are controlled to assure that changes are documented and approved by authorized personnel. Where changes to previously verified computer programs are made, verification is required for the changes, including evaluation of the effects of these changes on paragraphs 3.2.3.1.a and 3.2.3.1.b.

3.2.3.3 Computer programs utilized in design shall be tested in accordance with the requirements of paragraph 11.2.5 of this Manual.

3.2.4 Control of Design Verification

3.2.4.1 The DE/LM is responsible for assuring that design controls are applied to verify the adequacy of design. As a minimum, design verification is accomplished by one or more of the following:

a. Design reviews which verify the following as a minimum:

(1) design inputs are correctly selected,

(2) assumptions necessary to perform the design activity are described and assumptions are identified for subsequent verifications when the detailed design activities are completed,

(3) an appropriate design method was used,

(4) design output is reasonable compared to design inputs, and;

EXHIBIT 3Y
PAGE 72 OF 77 (PAGE(S))

(5) the necessary design input and verification requirements for interfacing organizations are specified in the design documents or in supporting procedures.

b. Calculations or analyses using alternate methods to verify the results of the original calculation or analysis.

c. Qualification tests. When qualifications tests are used to verify the adequacy of design, the following shall be addressed:

(1) the tests to be accomplished shall be clearly identified and documented;

(2) testing shall demonstrate adequacy of performance under conditions that simulate the most adverse design conditions,

(3) when testing is intended to verify only specific design features, the other features of the design shall be verified by other means,

(4) test results shall be documented and evaluated by the design organization and reviewed by Quality Assurance,

(5) when qualification testing indicates that modifications to the item are necessary to obtain acceptable performance, the modification shall be documented and the item modified and retested or otherwise verified to assure satisfactory performance, and,

(6) when tests are performed on models or mockups, scaling laws shall be established, verified, and subject to error analysis.

3.2.4.2 Design verification shall be performed by an individual or group other than those who performed the original design. Design verification may be performed by the originator's supervisor provided the supervisor did not specify a singular design approach or rule out certain design considerations and did not establish the design inputs used in the design, or provided the supervisor is the only individual in the organization competent to perform the verification. Cursory supervisory reviews do not satisfy the intent of design verification.

3.2.4.3 The DE/LM shall assure that the particular method of design verification used for each design is identified and documented.

EXHIBIT 37
PAGE 73 OF 127 PAGE(S)

N... 3-97-013

3.2.4.4 Design verification, for the level of design activity accomplished, shall be performed prior to release for procurement, manufacture, construction, or release to another organization for use in other design activities except in those cases where this timing cannot be met, such as when insufficient data exist. In those cases, the unverified portion of the design shall be identified and controlled. In all cases the design verification shall be completed prior to relying upon the component, system, or structure to perform its function.

3.2.4.5 Where changes to previously verified designs are made, design verification is required for the changes, including an evaluation of the effects of those changes on the overall design.

3.2.5 Design Drawings

3.2.5.1 Completed design drawings are reviewed by the DE/LM or a designated alternate to assure they meet the requirements of the design specification, and if acceptable, approval is documented on the drawings.

3.2.5.2 Quality Assurance reviews design drawings referenced by work directing documents to ensure that accept/reject criteria are clearly defined. If acceptable, Quality Assurance approval is documented on the work directing documents.

3.2.5.3 Changes to design drawings are handled in the same manner as the original issues.

3.2.5.4 The DE/LM is responsible for assuring that changes to final designs, including field changes, are justified and subject to design control measures commensurate with those applied to the original design. Changes to final design shall be reviewed and approved by the originating group, organization, or an approved alternate designated by the DE/LM.

3.2.6 Design Interface Control

3.2.6.1 The DE/LM is responsible for identifying, controlling, and documenting design interfaces, both internal and external, among participating design organizations.

3.2.6.2 Interface controls include assigning responsibility and establishing procedures for review, approval, release, distribution, and revision of documents between participating design organizations.

3.2.6.3 Design information transmitted across interfaces are documented and controlled.

3.2.6.4 Design information initially transmitted orally or by informal means across interfaces is confirmed by a controlled document.

3.2.7 Records

Controls are established to assure that documentation and records which provide evidence that design and verification processes were performed in accordance with the requirements of this Manual are assembled, stored, and maintained in a manner which would preclude loss or damage by any means. The controls shall also provide documented evidence that all applicable data which applies to the design has been included in the design. Measures shall be established to assure that all "as-built" data coming in from a field activity is assembled in a manner which will ensure that all data is transferred to the final "as-built" documentation.

E3

EXHIBIT 34
PAGE 75 OF 127 PAGE(S)

4.0 PROCUREMENT DOCUMENT CONTROL

4.1 Scope

This section describes the requirements for preparation, review, and approval of procurement documents and changes thereto in order to control the quality of Supplier-furnished material, equipment, or services. Detailed specifics for implementation and appropriate forms are documented in implementing procedures and instructions.

4.2 Requirements

4.2.1 Content of the Procurement Documents

Procurement documents issued at all tiers of procurement shall include:

a. a statement of the scope of the work to be performed by the Supplier;

b. technical requirements, which are specified by reference to specific drawings, specifications, codes, standards, regulations, procedures, or instructions, including revisions, that describe the items or services to be furnished. Procurement documents shall provide for identification of test, inspection, and acceptance requirements;

c. Quality Assurance Program requirements, the extent of which shall depend on the type and use of the item or service being procured. Procurement documents for items (other than for commercial grade off-the-shelf items, as defined in 10CFR21 [the term "commercial grade" may not be applicable to work performed under contracts specifying use of NQA-1]) and for services shall include requirements for the Supplier to incorporate quality program requirements in sub-tier procurement documents;

d. right of access to the Suppliers' facility and records for inspection or assessment;

e. documentation required to be submitted for information, review, or approval, and time of submittal. When purchase documents require the Supplier to maintain specific quality assurance records, the retention times and disposition requirements shall be prescribed;

f. Suppliers' requirements for the reporting and disposition of nonconformances, including MK approval of disposition; and,

g. identification of spare and replacement parts or assemblies and delineation of the technical and quality assurance data required for these parts or assemblies.

4.2.2 Procurement Document Review

4.2.2.1 The Design/Construction Project Engineer has the responsibility to:

a. review the procurement documents and changes to assure that documents transmitted to the prospective Supplier(s) include provisions to assure that items or services will meet the specified requirements;

b. document the reviews to provide objective evidence of satisfactory accomplishment of such review prior to contract award;

c. ensure that changes made as a result of the bid evaluations or precontract negotiations are incorporated into the procurement documents. The review of such changes and their effects shall be completed prior to contract award. This review shall include the following considerations:

(1) Appropriate requirements specified in paragraph 4.2.1,

(2) Determination of any additional or modified design criteria, and,

(3) Analysis of exceptions or changes requested or specified by the Supplier and determination of the effects such changes may have on the intent of the procurement documents or quality of the item or service to be furnished.

4.2.2.2 Quality-affecting procurement documents shall be reviewed by the Project Quality Manager. This review shall be performed and documented to assure that quality requirements are correctly stated, can be inspected and controlled, and are prepared to incorporate appropriate provisions of paragraphs 4.2.1 and 4.2.2.

4.2.2.3 With the exception of changes to commercial terms (eg., cost, quantity, delivery schedule) Procurement document changes are subject to the same degree of control as the original documents.

E4

EXHIBIT 3

PAGE 1 OF 12 PAGE(S)

5.0 INSTRUCTIONS, PROCEDURES, AND DRAWINGS

5.1 Scope

This section describes the requirements for Quality Assurance Program Instructions, Procedures, and Drawings.

5.2 Requirements

5.2.1 Documented Procedures

5.2.1.1 Activities that affect quality shall be described by and accomplished through implementation of documented procedures, instructions, or drawings, as appropriate.

5.2.1.2 Procedures, instructions, and drawings shall include appropriate quantitative and qualitative acceptance criteria for determining satisfactory work performances and quality compliance.

5.2.2 Approval

All procedures and instructions that delineate requirements for implementing quality affecting activities shall be approved and signed by the Group Quality Director/Project Quality Manager.

E5

EXHIBIT 31
PAGE 109 OF 121 PAGE(S)

CASE NO. 1-97-013

6.0 DOCUMENT CONTROL

6.1 Scope

This section describes the requirements for the preparation, issue, and change of documents that specify quality requirements or prescribe activities affecting quality.

6.2 Requirements

6.2.1 Control Requirements

6.2.1.1 The Design Project Engineer/Construction Project Engineer is responsible for controlling documents which, as a minimum:

a. identifies the documents to be controlled;

b. identifies personnel, positions, or organizations responsible for preparing, reviewing, approving, and issuing documents;

c. includes a review of documents for adequacy, completeness, and correctness prior to approval and issuance; and,

d. provides assurance that correct and applicable documents are available at the location where they are to be used.

6.2.1.2 For Quality Management Department generated documents, the Group Quality Director/Project Quality Manager is responsible for conducting the activities described in Paragraph 6.2.1.1.

6.2.1.3 The Group Quality Director/Project Quality Manager is responsible for reviewing the documents to assure that the quality requirements are correctly stated and inspection criteria is clearly specified.

6.2.2 Document Changes

6.2.2.1 All changes to documents shall be reviewed and approved by the same organizations that performed the original review and approval unless other organizations are specifically designated.

6.2.2.2 The reviewing organization shall have access to pertinent background data or information upon which to base their approval.

EXHIBIT [illegible]
PAGE [illegible] OF [illegible] PAGE(S)

6.2.2.3 Approved changes to documents shall be promptly incorporated into instructions, procedures, or drawings, as appropriate.

6.2.2.4 Obsolete or superseded documents shall be controlled to prevent their inadvertent use.

6.2.3 Status

The current revision status of documents shall be identified and maintained.

E6

EXHIBIT 34
PAGE 32 OF 127 PAGE(S)

CASE NO. 3-97-013

7.0 CONTROL OF PURCHASED ITEMS AND SERVICES

7.1 Scope

This section describes the requirements for assuring that material, equipment, and services, whether purchased directly by MK or through Suppliers and sub-tier suppliers, conform to procurement documents. Detailed specifics for implementation and appropriate forms are documented in implementing corporate and project procedures or instructions.

7.2 Requirements

7.2.1 Procurement Planning

7.2.1.1 Procurement activities shall be planned and documented to assure a systematic approach to the procurement process. Procurement planning shall result in the documented identification of procurement methods and organizational responsibilities, which as a minimum, determine:

a. what is to be accomplished;

b. who is to accomplish it;

c. how it is to be accomplished; and,

d. when it is to be accomplished.

7.2.1.2 Planning shall be accomplished as early as practical, and no later than at the start of those procurement activities which are required to be controlled, to assure interface compatibility and a uniform approach to the procurement process.

7.2.1.3 Planning shall result in the documented identification of methods to be used in procurement activities, sequence of actions and milestones indicating the completion of these activities, and the preparation of applicable procedures/instructions prior to the initiation of each individual activity listed below.

a. procurement document preparation, review, and change control;

b. selection of procurement sources;

c. bid evaluation and award;

d. control of Supplier performance;

EXHIBIT 51
PAGE 51 OF 121 PAGE(S)

e. verification (surveillance, inspection, or assessment activities), including notification for hold and witness points;

f. control of nonconformances;

g. corrective action;

h. acceptance of item or service; and,

i. quality assurance records.

7.2.2 Supplier Selection

7.2.2.1 Items and services (other than commercial grade items as defined in paragraph 7.2.9) that affect the quality of structures, systems, and components shall be purchased by the Procurement Manager from only those suppliers whose names appear on the MK Approved Suppliers List or addenda to the Approved Suppliers List. Alternatively, MK may obtain approval from the client to use a supplier based on the client's survey and assessment program.

7.2.2.2 Suppliers shall be selected based on evaluation of their capability to provide items or services in accordance with the requirements of the procurement documents prior to award of contract.

7.2.2.3 Procurement source evaluation and selection measures shall be implemented and shall provide for identification of MK's organizational responsibilities for determining supplier capability.Measures for the initial evaluation of procurement sources not listed on the Approved Supplier's List, and the results therefrom, shall be documented and shall include one or more of the following:

a. evaluation of the Supplier's history of providing an identical or similar product which performs satisfactorily in actual use. The Supplier's history shall reflect current capability;

b. Supplier's current quality records supported by documented qualitative and quantitative information which can be objectively evaluated; or,

c. Supplier's technical and quality capability as determined by a direct evaluation of the Supplier's facilities and personnel and the implementation of the Supplier's quality assurance program.

EXHIBIT 39
PAGE 32 OF 127 PAGE(S)

7.2.2.4 Suppliers may be maintained on the ASL by the Group Quality Director using one of the following methods:

a. Annual Survey/Assessments of the Supplier's Facilities; or,

b. Annual evaluation of the quality of the material/items/services supplied or, in the absence of this quantitative data, a review to confirm the supplier's Quality Program remains acceptable.

Notes:

(1) This annual evaluation shall be documented in the form of a memo.

(2) This option may only be used in place of an assessment/survey for two years beyond the year the last survey/assessment of the supplier's facility.

7.2.3 Bid Evaluation during Procurement Planning

7.2.3.1 Where procurement planning establishes bid evaluation, it shall be made to confirm conformance to the procurement documents by individuals or organizations designated to evaluate the following subjects, as applicable to the type of procurement:

a. technical considerations;

b. quality assurance requirements;

c. Supplier's personnel;

d. Supplier's production capability;

e. Supplier's past performance;

f. alternates; and,

g. exceptions.

7.2.3.2 Prior to the award of the contract, MK shall also resolve or obtain commitments to resolve unacceptable quality conditions resulting from the bid evaluation.

7.2.4 Supplier Performance Evaluation

EXHIBIT 34
PAGE 83 OF 87 PAGES

7.2.4.1 Interfaces shall be established with Suppliers. To the extent necessary, verification of Suppliers' performance shall be conducted to assure the Suppliers' conformance to

the procurement documents. These interface and verification activities shall provide for:

a. establishing an understanding with the Supplier of the provisions and specifications of the procurement documents;

b. requiring the Supplier to identify planning techniques and processes to be utilized in fulfilling procurement document requirements;

c. reviewing Supplier documents which are generated or processed during activities fulfilling procurement requirements;

d. identifying and processing necessary change information;

e. establishing methods of document information exchange with the Supplier; and,

f. establishing the extent of source surveillance and inspection activities.

7.2.4.2 The verification activities described above shall be conducted as early as practical. These verification activities, however, shall not relieve the Supplier of the Supplier's responsibilities for verification of quality achievement.

7.2.4.3 The extent of verification activities, including planning, shall be a function of the relative importance, complexity, and quantity of the item or services procured and the Supplier's quality performance. Verification activities shall be accomplished by qualified personnel assigned to check, inspect, assess, or witness the activities of Suppliers.

7.2.4.4 Activities performed to verify conformance to requirements of procurement documents shall be recorded. Source surveillances and inspections, assessments, receiving inspections, nonconformances, dispositions, waivers, and corrective actions shall be documented. This documentation shall be evaluated by the Group Quality Director/Project Quality Manager to determine the Supplier's quality assurance program effectiveness.

7.2.5 Control of Supplier Generated Documents

Procurement documents shall identify Supplier documentation submittal requirements, including the time of submittal. Suppliers conformance to the submittal requirements shall be verified at receipt inspection by the Project Quality Manager. Supplier-generated documentation shall be controlled upon receipt. Technical, inspection, and test data shall be evaluated against acceptance criteria and the results of the evaluation recorded. (Reference paragraph 7.2.8.)

EXHIBIT 37

7.2.6 Control of Changes in Items or Services

Measures to control changes in procurement documents shall be established, implemented, and documented.

7.2.7 Acceptance of Items or Services

7.2.7.1 Suppliers shall verify that items or services being furnished comply with the procurement document requirements. When required by Code, regulation, or contract, documentary evidence that items conform to procurement documents shall be available at the nuclear facility prior to installation or use.

7.2.7.2 The following methods shall be used to accept an item or related service from a Supplier:

a. Source Verification

When source verification is used, it shall be performed at intervals consistent with the importance and complexity of the item or service, and it shall be implemented to monitor, witness, or observe activities. Similarly, source inspection shall be implemented in accordance with plans to perform inspections, examinations, or tests at predetermined points. Upon acceptance of source verification, documented evidence of acceptance shall be furnished to the receiving destination of the item and to the Supplier.

b. Receiving Inspection

When receiving inspection is used, purchased items shall be inspected as necessary to verify conformance to specified requirements, taking into account source verification and assessment activities and the demonstrated quality performance of the supplier. Receiving inspection shall be performed in accordance with established procedures and inspection instructions, to verify by objective evidence such features as proper configuration; identification; dimensional, physical, and other characteristics; freedom from shipping damage; and cleanness. Receiving inspection shall be coordinated with the review of Supplier documentation when procurement documents require such documentation to be furnished prior to receiving inspection. The Project Quality Manager is responsible for the receiving inspection program.

EXHIBIT 37
PAGE 35 OF 127 PAGE(S)

c. Supplier's Certificate of Conformance;

When a Certificate of Conformance is used, the minimum criteria of (1) through (6) below shall be met.

(1) The certificate shall identify the specific procurement requirements met by the purchased material or equipment, such as codes, standards, and other specifications. This may be accomplished by including a list of the specific requirements or by providing, on-site, a copy of the purchase order and the procurement specifications or drawings, together with a suitable certificate. The procurement requirements identified shall include any approved changes, waivers, or deviations applicable to the subject material or equipment.

(2) The certificate shall identify any procurement requirements that have not been met, together with an explanation and the means for resolving the nonconformances.

(3) The certificate shall be attested to by a person who is responsible for this quality assurance function and whose function and position are described in the Supplier's quality assurance program.

(4) The certification system, including the procedures to be followed in filling out a certificate and the administrative procedures for review and approval of the certificates, shall be described in the Supplier's quality assurance program.

(5) The validity of Supplier certificates and the effectiveness of the certification system shall be verified during the performance of assessments of the Supplier or independent inspection or test of the items. Such verification shall be conducted at intervals commensurate with the Supplier's past quality performance.

(6) The certificate shall identify the purchased material or equipment, such as by the purchase order number.

d. Post Installation Test

When post-installation testing is used, post-installation test requirements and acceptance documentation shall be mutually established by MK and the Supplier.

e. any combination of a. through d. above.

EXHIBIT 37
PAGE 56 OF 127 PAGE(S)

7.2.7.3 In certain cases involving procurement of services only, such as third-party inspection, engineering, consulting services, etc., acceptance of the service shall be by any or all of the following methods:

a. technical verification of data produced;

b. surveillance and/or assessment of the activity; or,

c. review of objective evidence for conformance to the procurement document requirements such as certifications, stress reports, etc.

7.2.8 Control of Supplier Nonconformances

7.2.8.1 Items and services that do not meet procurement document requirements shall be identified as nonconforming and will be documented and dispositioned.

7.2.8.2 Documentation for nonconforming items and services shall include:

a. evaluation of the nonconformance;

b. nonconformance notices submitted by the Supplier. These submittals shall include Supplier-recommended disposition (e.g., use-as-is or repair) and technical justification. Nonconformances which consist of one or more of the following shall be submitted:

(1) technical or material requirement violation,

(2) Supplier special process violation,

(3) nonconformance that cannot be corrected by continuation of the original manufacturing process or by rework, and,

(4) the item does not conform to the original requirement even though the item can be restored to a condition such that the capability of the item to function is unimpaired.

c. disposition of Supplier recommendation;

d. verification of the implementation of the disposition; and,

e. maintenance of records of Supplier-submitted nonconformances.

EXHIBIT [illegible]
PAGE [illegible] OF [illegible] PAGE(S)

7.2.9 Commercial Grade Items

Where a design, for work under 10CFR50 Appendix B, utilizes commercial grade items, the following requirements are an acceptable alternate to other requirements of this section, except as noted in b. below:

a. The commercial grade item is identified in an approved design output document. An alternate commercial grade item may be applied, provided design engineering provides verification that the alternate commercial grade item will perform the intended function and will meet design requirements applicable to both the replaced item and its application;

b. Source evaluation and selection, when determined necessary based on complexity and importance to safety, shall be in accordance with paragraph 7.2.2;

c. Commercial grade items shall be identified in the purchase order by the manufacturer's published product description (for example, catalog number); and,

d. Receipt inspection of a commercial grade item shall determine that:

(1) damage was not sustained during shipment,

(2) the item received is the item ordered,

(3) inspection and/or testing is accomplished, as required by the purchase order, to assure conformance with the manufacturer's published requirements, and,

(4) documentation, as applicable to the item, has been received and is acceptable.

E7

EXHIBIT 34
PAGE 35 OF 37 PAGE(S)

8.0 IDENTIFICATION AND CONTROL OF ITEMS

8.1 Scope

This section describes the requirements for assuring that only correct and accepted items are used during construction, erection, and installation activities that are governed by the requirements of this Manual. Detailed specifics for implementation and appropriate forms are documented in implementing procedures and instructions.

8.2 Requirements

8.2.1 Procedural Controls

8.2.1.1 The Construction Project Engineer is responsible for developing and implementing procedures or instructions which, as a minimum:

a. specify those items which require identification from their initial receipt and fabrication up to and including installation and use. This identification shall relate an item to an applicable design or other pertinent specifying document;

b. define the means of physical identification. Physical separation or other appropriate means shall be used only when physical identification is impractical or insufficient;

c. define specific identification or traceability requirements when required by codes, standards, or specifications;

d. identify those items, when specified, that have limited shelf life or limited operating life or cycles; and,

e. specify requirements for maintenance of stored item identification.

8.2.2 Identification and Marking

The Warehouse Manager is responsible for:

a. marking the specified material in a clear and legible manner which will not detrimentally affect the function or service life of the item;

b. transferring the markings to each part of a specified item when subdivided;

c. providing a means of marking so that identification is not obliterated or hidden by surface treatment or coatings, unless other suitable means of identification are substituted;

d. provide for maintenance or replacement of markings due to damage or aging;

e. protect identifications from deterioration due to environmental exposure;

f. for limited life items, provide controls to preclude use of the item after the life has expired; and,

g. Provide for updating plant records.

8.2.3 Verification

The Project Quality Manager is responsible for providing verification of installed identified material when required by codes, standards, or specifications.

E8

EXHIBIT 37
PAGE 90 OF 127 PAGE(S)

9.0 CONTROL OF PROCESSES

9.1 Scope

This section describes the requirements for the control of those processes and special processes that affect the quality of items or services whose fabrication, installation, or operation is governed by the requirements of this Manual. Detailed specifics for implementation and appropriate forms are documented in implementing procedures and instructions.

9.2 Requirements

9.2.1 Procedural Controls

The Construction Engineering Manager is responsible for ensuring development and implementation of procedures or instructions which, as a minimum:

a. control or verify quality of special processes, such as welding, heat treatment, and nondestructive examination, in accordance with applicable codes and standards;

b. establish the requirements for qualification of personnel and equipment used in the process, including equipment calibration requirements;

c. provide that process parameters are controlled and that specified environmental conditions are maintained by use of drawings, checklists, work packages, or other appropriate means;

d. identify acceptance criteria for the processes; and,

e. for processes where the quality requirements either exceed or are not covered by existing codes and standards, specify the necessary requirements for qualification of personnel, procedures, or equipment.

EXHIBIT 37
PAGE 11 OF 127 PAGE(S)

9.2.2 Approval and Records

The Group Quality Director/Project Quality Manager is responsible for:

a. review and approval of all procedures and instructions relating to special processes for inclusion of applicable acceptance criteria; and,

b. maintenance of records as appropriate for currently qualified personnel, processes, and equipment for each special process.

E9

EXHIBIT 34
PAGE 92 OF 107 PAGE(S)

10.0 INSPECTION

10.1 Scope

This section describes the requirements for the planning and implementing of inspection activities required to verify conformance of an item or activity to specified requirements. Detailed specifics for implementation and appropriate forms are documented in implementing procedures and instructions.

10.2 Requirements

10.2.1 Inspection Planning

10.2.1.1 Planning for inspection activities shall be accomplished and documented. The documentation shall identify characteristics, methods, and acceptance criteria, and shall provide for recording objective evidence of inspection results. Where a sample is used to verify acceptability of a group of items, the sampling procedure shall be based on recognized standard practices.

10.2.1.2 Inspection personnel who verify conformance of work activities for purposes of acceptance shall be qualified to perform the assigned inspection task in accordance with paragraph 10.2.5.

10.2.1.3 Where mandatory inspection hold points (beyond which work shall not proceed without the specific consent of the organization establishing the hold point) are required, the specific hold points shall be indicated in the appropriate documents. Consent to waive a specified hold point is required from the designated representative of the organization establishing the hold point and the Project Quality Manager, and shall be recorded prior to continuation of work beyond the designated hold point.

10.2.2 In-Process Inspection

10.2.2.1 Inspection of items in-process or under construction shall be performed for work activities where necessary to verify quality. If inspection of processed items is impossible or disadvantageous, indirect control by monitoring of processing methods, equipment, and personnel shall be provided. Both inspection and process monitoring shall be provided when control is inadequate without both.

10.2.2.2 A combination of inspection and process monitoring methods, when used, shall be performed in a systematic manner to assure that the specified requirements for control of the process and quality of the item are being achieved throughout the duration of the process.

EXHIBIT 34
PAGE 73 OF 12 (PAGE(S)

10.2.2.3 Controls, where required, shall be established and documented for the coordination and sequencing of these activities at established inspection points during successive stages of the conducted process or construction.

10.2.3 Final Inspection

10.2.3.1 Final inspections shall include a records review of the results and resolution of nonconformances identified by prior inspections. The final inspection shall be planned to arrive at a conclusion regarding conformance of the item to specified requirements.

10.2.3.2 Completed items shall be inspected for completeness, markings, calibration, adjustments, protection from damage, or other characteristics as required to verify the quality and conformance of the item to specified requirements.

10.2.4 Responsibilities

10.2.4.1 The Construction Engineering Manager is responsible for developing and implementing work packages to coordinate work and inspection activities.

10.2.4.2 The Project Quality Manager is responsible for:

a. assigning inspection personnel, who do not report directly the immediate supervisors responsible for the work being inspected, to perform inspection activities;

b. verifying procedures or instructions have hold points as specified by applicable codes and standards;

c. ensuring that Hold Points, as described in paragraph 10.2.1.3, are not bypassed;

d. approving and documenting acceptance of final inspections, reinspections, or retests;

e. maintaining records involving inspection activities which contain, as a minimum:

(1) item inspected,

(2) date of inspection,

(3) inspector's name,

(4) type of observation,

EXHIBIT 39
PAGE 77 OF 127 PAGE(S)

CASE NO. 97-011

(5) acceptance criteria,

(6) results or acceptability,

(7) reference to M&TE, as applicable; and,

(8) reference to information on action taken in connection with nonconformance.

f. review of records generated for adequacy and completeness.

10.2.5 Qualification of Inspection and Test Personnel

10.2.5.1 Qualification requirements shall be established and maintained:

a. in detailed procedures and instructions;

b. such that only those personnel who meet the necessary qualification requirements are permitted to perform inspection and testing activities; and,

c. such that when single inspections or tests implemented by a team or group, personnel not meeting the necessary requirements may be used in data taking or in plant or equipment operations, provided they are supervised or overseen by a qualified individual.

10.2.5.2 Personnel selected for performing inspection and test activities shall have the experience or training commensurate with the scope, complexity, or special nature of the activities.

10.2.5.3 Provisions shall be made for the indoctrination of inspection and test personnel as to the technical objectives and requirements of the applicable codes and standards and the quality assurance program elements that are to be employed.

10.2.5.4 The need for a formal training program shall be determined, and such training activities be conducted and documented as required to qualify personnel who perform inspections and tests. On-the-job training shall also be included in the program, with emphasis on first-hand experience gained through actual performance of inspections and tests.

10.2.5.5 The capabilities of a candidate for certification shall be initially determined by a suitable evaluation of the candidate's education, experience, training, and either test results or capability demonstration.

EXHIBIT 37
PAGE [illegible] OF 127 PAGE(S)

10.2.5.6 The job performance of inspection and test personnel shall be reevaluated at periodic intervals not to exceed three years. Reevaluation shall be by evidence of continued satisfactory performance or redetermination of capability in accordance with the requirements of paragraph 10.2.5.5. If during this evaluation or at any other time, it is determined that the capabilities of an individual are not in accordance with qualification requirements specified for the job, that person shall be removed from that activity until such time as the required capability has been demonstrated. Personnel who have not performed inspection or testing activities in their qualified area(s) for a period of one year shall be reevaluated by a redetermination of required capability in accordance with the requirements of paragraph 10.2.5.5.

10.2.5.7 The qualification of inspection and test personnel shall be certified in writing in an appropriate form, including the following information:

a. employer's name;

b. identification of person being certified;

c. activities certified to perform;

d. basis used for certification, which includes such factors as:

(1) education, experience, indoctrination, and training,

(2) test results, where applicable, and,

(3) results of capability demonstration;

e. results of periodic evaluation;

f. results of physical examinations, when required;

g. signature of employer's designated representative who is responsible for such certification; and,

h. date of certification and date of certification expiration.

10.2.5.8 Any special physical characteristics needed in the performance of an activity shall be identified, including the need for initial and subsequent physical examination.

10.2.5.9 Records of inspection and test personnel qualification shall be established and maintained by the Project Quality Manager. The Group Quality Director maintains qualification records of Project Quality Managers and the NDE Level III.

10.2.6 Non-Destructive Examination (NDE) Personnel

10.2.6.1 NDE methods covered by the Quality Assurance Program include the following:

a. Radiographic Testing (RT);

b. Magnetic Particle Testing (MT);

c. Ultrasonic Testing (UT);

d. Liquid Penetrant Testing (PT); and,

e. Leak Testing (LT).

10.2.6.2 All personnel performing NDE activities are qualified and certified in accordance with MK's Written Practice, which meets the requirements of SNT-TC-1A (1980, 1984, and 1988). The written practice, which is approved by the MK NDE Level III, includes the following requirements and provisions:

a. eligibility for certification;

b. education;

c. experience;

d. training;

e. physical examination;

f. technical examination and grading;

g. certification statement;

h. retraining;

i. reexamination;

j. recertification;

k. interrupted service; and,

l. revocation of certification.

EXHIBIT 37
PAGE 27 OF 122 PAGE(S)

E10

11.0 TEST CONTROL

11.1 Scope

This section describes the requirements for the planning and execution of tests required to verify conformance of an item or computer program to specified requirements and to demonstrate that items will perform satisfactorily in service.

11.2 Requirements

11.2.1 Required Tests

Test requirements and acceptance criteria shall be provided or approved by the organization responsible for the design of the item to be tested unless otherwise designated. Tests, including, as appropriate, prototype qualification tests, production tests, proof tests prior to installation, construction tests, pre-operational tests, and operational tests shall be controlled. Test requirements and acceptance criteria shall be based upon specified requirements contained in applicable design or other pertinent technical documents.

11.2.2 Test Procedures

11.2.2.1 Tests procedures shall include or reference the following:

a. test objectives and/or characteristics to be tested;

b. the requirements and acceptance limits contained in applicable documents, including precision and accuracy;

c. instructions for performing the test;

d. test prerequisites, including:

(1) calibrated instrumentation,

(2) adequate test equipment and instrumentation is available and used,

(3) completeness of item to be tested,

(4) suitable and controlled environmental conditions, and,

(5) provisions for data collection and storage;

EXHIBIT 21
PAGE 28 OF 71 PAGE(S)

e. the need for monitoring;

f. mandatory inspection hold points (as required);

g. acceptance and/or rejection criteria, including required levels of precision and accuracy;

h. evaluation of test results and/or methods of data analysis;

i. methods and responsibilities for the evaluation, acceptance, and recording of test data and results; and,

j. provisions for assuring test prerequisites have been met, including conduct of tests by trained or appropriately qualified personnel.

11.2.2.2 In lieu of specially prepared written test procedures, appropriate sections of related documents, such as ASTM methods, supplier manuals, equipment maintenance instructions, or approved drawings or work packages with acceptance criteria, can be used. Such documents shall include adequate instructions to assure the required quality of work.

11.2.3 Test Results

Test results shall be documented, evaluated, and their status recorded by a Responsible Individual or group as designated in a procedure/instruction to assure that test requirements have been satisfied.

11.2.4 Test Records

Test records shall, as a minimum, contain the following:

a. item tested;

b. date of test;

c. test personnel;

d. type of equipment, measuring device, or recorder;

e. type of observation;

f. results and acceptability;

EXHIBIT 31
PAGE 11 OF 17 PAGE(S)

g. information related to conditions adverse to quality;

h. action taken in connection with any deviations noted; and,

i. person evaluating test results.

11.2.5 Computer Program Testing

11.2.5.1 Computer programs covered by this paragraph include any sequence of instructions suitable for processing by a computer which are utilized for the following:

a. Design analysis;

b. Operations or process control; or,

c. Data base or document control registers when used as the controlled source of quality information identified in a. or b. above.

NOTE: The requirements of paragraph 11.2.5 do not apply to hand held calculators.

11.2.5.2 Required tests, including verification tests, hardware integration tests, and in-use tests, as appropriate, shall be established and documented in implementing procedures or instructions. Test requirements and acceptance criteria shall be based on the applicable design or other pertinent technical documents.

11.2.5.3 Verification tests shall demonstrate the capability of a computer program to produce valid results for test problems encompassing the range of permitted usage as defined in the test procedure. Test problem solutions are acceptable by any of the following:

a. hand calculations;

b. calculations using comparable proven procedures; or,

c. empirical data and information from technical literature.

11.2.5.4 Verification tests for computer programs for operational control shall demonstrate the required performance over the range of operation. Depending on the complexity of the computer program, testing may range from a simple test of the completed program to a series of tests performed at various stages of program development to verify correct translation between stages and proper working of individual modules, followed by an overall program test. Regardless of the number of stages, verification testing shall be sufficient to establish that test requirements are satisfied and that the program produces a valid result for its intended function.

EXHIBIT 34
PAGE 100 OF 127 PAGE(S)

Docket No. 3-97-013

11.2.5.5 In-use tests may be utilized when developed and documented test problems will permit confirmation of acceptable performance. Test problems shall also be utilized whenever the computer program is installed on a different computer or when significant hardware or operating system configuration changes are made. Periodic manual or automatic self-check routines shall be prescribed in implementing procedures and performed for applications where computer failures or drift can affect the required performance.

11.2.5.6 Computer test procedures shall specify the following:

a. tests and test sequence;

b. ranges of input parameters;

c. stages at which testing is required;

d. criteria for establishing test cases;

e. requirements for testing logic branches;

f. requirements for hardware integration;

g. anticipated output values;

h. acceptance criteria;

i. reports, records, and standard formatting and conventions; and,

j. approval authority for test results.

11.2.5.7 Test results shall be documented and evaluated to assure that the test requirements have been satisfied.

a. Verification test records shall identify the following:

(1) computer program tested,

(2) computer hardware used,

(3) test equipment and calibrations, where applicable,

(4) date of test,

EXHIBIT 37
PAGE [illegible] OF [illegible] PAGE(S)

[illegible] 3-97-013

(5) tester,

(6) results and acceptability,

(7) test problems,

(8) simulation models used, where applicable,

(9) action taken in connection with any nonconformances, and,

(10) person evaluation test results.

b. In-use test records shall identify items (1) through (6) above.

E11

EXHIBIT 5?

PAGE 102 OF 107 PAGE(S)

12.0 CONTROL OF MEASURING AND TEST EQUIPMENT

12.1 Scope

This section describes the requirements for the control of tools, gages, instruments, and other measuring and test equipment used for activities affecting quality. Detailed specifics for implementation and appropriate forms are documented in implementing procedures and instructions.

12.2 Requirements

12.2.1 Selection, Calibration, Use

12.2.1.1 Measuring and test equipment shall be calibrated and adjusted at specified periods to maintain accuracy within necessary limits.

12.2.1.2 Selection of measuring and test equipment shall be controlled to assure that such items are of proper type, range, accuracy, and tolerance to accomplish the function of determining conformance to specified requirements.

12.2.1.3 Measuring and test equipment shall be calibrated, adjusted, and maintained at prescribed intervals, or prior to use, against certified equipment having known valid relationships to nationally recognized standards. If no nationally recognized standards exist, the bases for calibration shall be documented.

12.2.1.4 The method and interval of calibration for each item shall be defined, based on the type of equipment, stability characteristics, required accuracy, intended use, and other conditions affecting measurement control. When measuring and test equipment is found to be out-of-calibration, an evaluation shall be made and documented of the validity of previous inspection or test results and of the acceptability of items previously inspected or tested. Out-of- calibration devices shall be tagged or segregated and not used until they have been recalibrated. If any measuring or test equipment is consistently found to be out-of-calibration, it shall be repaired or replaced. A calibration shall be performed when the accuracy of the equipment is suspect.

12.2.1.5 Calibration and control measures may not be required for rulers, tape measures, levels, and other such devices, if normal commercial equipment provides adequate accuracy. The devices not requiring calibration shall be documented.

12.2.1.6 Measuring and test equipment shall be properly handled and stored to maintain accuracy.

12.2.2 Records

12.2.2.1 Records shall be maintained and equipment shall be suitably marked to indicate calibration status.

12.2.2.2 The Project Quality Manager is responsible for:

a. maintaining the calibration status of measuring and test equipment; and,

b. maintaining records as required by the calibration program.

E12

EXHIBIT 51
PAGE 101 OF 127 PAGE(S)

13.0 HANDLING, STORAGE, AND SHIPPING

13.1 Scope

This section describes the requirements for the control of handling, storage, cleaning, packaging, shipping, and preservation of items to prevent damage or loss and to minimize deterioration. Detailed specifics for implementation and appropriate forms are documented in implementing procedures and instructions.

13.2 Requirements

13.2.1 Procedures and Equipment

13.2.1.1 Handling, storage, shipping, cleaning, packaging, and preservation of items shall be conducted in accordance with established work and inspection procedures, instructions, drawings, specifications, shipment instructions, or other pertinent documents or procedures specified for use in conducting the activity.

13.2.1.2 When required for particular items, special equipment (such as containers, shock absorbers, and accelerometers) and special protective environments (such as inert gas atmosphere, specific moisture content levels, and temperature levels) shall be specified, provided, and their existence verified.

13.2.1.3 When required for critical, sensitive, perishable, or high-value articles, specific procedures for handling, storage, packaging, shipping, and preservation shall be used.

13.2.1.4 Special handling tools and equipment shall be utilized and controlled as necessary to ensure safe and adequate handling. Special handling tools and equipment shall be inspected and tested in accordance with procedures and at specified time intervals to verify that the tools and equipment are adequately maintained.

13.2.1.5 Operators of special handling and lifting equipment shall be experienced or trained in use of the equipment.

13.2.1.6 Instructions for marking, labeling, packaging, shipment, handling, and storage of items shall be established as necessary to adequately identify, maintain, and preserve the item, including indication of the presence of special environments or the need for special controls.

E13

EXHIBIT 39
PAGE 105 OF 167 PAGE(S)

14.0 INSPECTION, TEST, AND OPERATING STATUS

14.1 Scope

This section describes the requirements for the identification and documentation of inspection and test activities. Detailed specifics for implementation and appropriate forms are documented in implementing procedures and instructions.

14.2 Requirements

14.2.1 Status

The status of inspection and test activities shall be identified either on the items or in documents traceable to the items where it is necessary to assure that required inspections and tests are performed and to assure that items which have not passed the required inspections and tests are not inadvertently installed, used, or operated.

14.2.2 Indicators

14.2.2.1 Status shall be maintained through indicators, such as physical location and tags, markings, shop travelers, stamps, inspection records, or other suitable means. The authority for application and removal of tags, markings, labels, and stamps shall be specified in implementing procedures and instructions.

14.2.2.2 Status indicators shall also provide for indicating the operating status of systems and components of the nuclear facility, such as by tagging valves and switches, to prevent inadvertent operation.

E14

EXHIBIT 37
PAGE 126 OF 127 PAGE(S)

CASE NO 3-97-013

15.0 CONTROL OF NONCONFORMING ITEMS

15.1 Scope

This section describes the requirements for the control of items that do not conform to specified requirements so as to prevent their inadvertent use or installation. Detailed specifics for implementation and appropriate forms are documented in implementing procedures and instructions. All individuals are responsible for identifying nonconformance items to the Project Quality Manager.

15.2 Requirements

15.2.1 Identification

15.2.1.1 The Project Quality Manager is responsible for assuring that nonconforming items are identified, documented, evaluated, segregated (when practical), dispositioned, and that affected organizations are notified.

15.2.1.2 The Project Quality Manager is responsible for assuring that identification of nonconforming items is done by marking, tagging, or other methods which shall not adversely affect the end use of the item. The identification shall be legible and easily recognizable. If identification of each nonconforming item is not practical, the container, package, or segregated storage area, as appropriate, shall be identified.

15.2.1.3 The Project Quality Manager is responsible for assuring that nonconforming items are segregated, when practical, by placing them in a clearly identified and designated hold area until they are properly dispositioned. When segregation is impractical or impossible due to physical conditions, such as size, weight, or access limitations, other precautions shall be employed to preclude inadvertent use of a nonconforming item.

15.2.2 Disposition

The disposition of documented nonconformances shall be controlled as described below.

15.2.2.1 Where MK is responsible for design, the Design Engineering/Licensing Manager is responsible for the review and approval of "Repair" or "Use-As-Is" nonconformance dispositions to ensure that design requirements are satisfied.

EXHIBIT 37
PAGE 127 OF 127 PAGE(S)

15.2.2.2 The Construction Engineering Manager is responsible for:

a. reviewing and recommending dispositions of nonconforming items;

b. the control of further processing, delivery, installation, or use of a nonconforming item, pending an evaluation and an approved disposition by authorized personnel;

c. developing procedures or instructions which delineate the responsibility and authority for the evaluation and disposition of the nonconforming item;

d. obtaining the documented final disposition, such as use-as-is, reject, repair, or rework; and,

e. obtaining documented technical justification and design organization approval for the acceptability of a nonconforming item, dispositioned repair, or use-as-is. The as-built records, if such records are required, shall reflect the accepted deviation.

15.2.2.3 The Project Quality Manager is responsible for selecting personnel for performing reinspections to determine conformance to the nonconformance disposition. If the disposition is repair or rework, reinspection shall be performed in accordance with applicable procedures or instructions and with the original acceptance criteria, unless the disposition has established alternate acceptance criteria.

E15

EXHIBIT 59
PAGE 125 OF 127 PAGE(S)

16.0 CORRECTIVE ACTION

16.1 Scope

This section describes the requirements for the prompt identification and correction of conditions adverse to quality. Detailed specifics for implementation and appropriate forms are documented in implementing procedures or instructions.

16.2 Requirements

16.2.1 Procedures

Conditions adverse to quality shall be evaluated and the need for corrective actions determined in accordance with established procedures and instructions, which provide for prompt identification and correction of conditions adverse to quality.

16.2.2 Corrective Action

16.2.2.1 Recurrent or programmatic conditions adverse to quality and recommendations for corrective action are reported on the Corrective Action Request (CAR). CAR's are distributed to responsible management personnel by the Group Quality Director/Project Quality Manager. The CAR from the Group Quality Director/Project Quality Manager establishes a due date for a response based on the severity of the situation. The Group Quality Director/Project Quality Manager shall maintain a log of CAR's and their required response dates, and shall inform in writing, the Group Quality Director/Project Manager. Response shall be required within 10 working days following notification.

16.2.2.2 The Project Quality Manager is responsible for collecting and organizing nonconformance accountability data to identify trends or conditions adverse to quality and to specify and evaluate the effectiveness of action taken to prevent recurrence of the nonconforming condition.

16.2.2.3 The Project Quality Manager evaluates nonconforming conditions on a quarterly basis (or more frequently) and documents this review in writing to the Group Quality Director. In conducting this evaluation, the PQM considers the following:

a. number and type of nonconforming conditions committed by each job function, which includes NCR's, NDE reports, weld repair reports, and/or WBDC repair reports;

b. volume of work handled by each job function and the number of personnel involved; and,

EXHIBIT 34
PAGE 101 OF 127 PAGE(S)

CSF NC 3-97-013

c. any other characteristics deemed relative.

16.2.2.4 Responses to CAR's are developed by responsible management personnel and are reviewed for acceptance by the Group Quality Director/Project Quality Manager. Responses include identification of the cause of the condition, action taken to correct the condition, actions taken to preclude repetition, and scheduled date of implementation of the corrective actions.

16.2.2.5 Follow-up shall be conducted by the Group Quality Director/Project Quality to assure proposed corrective actions have been implemented and have achieved the desired results. This follow-up occurs within 30 days of the scheduled implementation date and is documented on the CAR by the Group Quality Director/Project Quality Manager.

16.2.2.6 The Project Quality Manager reports in writing on the status and effectiveness of the corrective action program to the Group Quality Director/Project Manager quarterly, or more frequently. The Group Quality Director shall utilize this information when reporting the status and adequacy of the QA Program to the MK Group President and CEO.

16.2.3 Subcontractor Corrective Action

16.2.3.1 Subcontractors are required to report conditions adverse to quality to the Project Quality Manager.

16.2.3.2 Subcontractors promptly identify and correct any conditions adverse to quality. In the case of a significant condition, the cause of the condition is determined, documented, and corrective action taken which will preclude recurrence of the condition.

16.2.3.3 The Project Quality Manager shall be responsible for effective follow-up action to verify acceptable implementation of subcontractor's corrective action.

E16

EXHIBIT 37
PAGE 113 OF 127 PAGE(S)

17.0 QUALITY ASSURANCE RECORDS

17.1 Scope

This section describes the requirements for the identification, preparation, and maintenance of records that furnish documentary evidence of quality. The term "records", as used throughout this section, is to be interpreted as Quality Assurance Records. Detailed specifics for implementation and appropriate forms are documented in implementing procedures or instructions.

17.2 Requirements

17.2.1 Records

Records shall be legible, identifiable, retrievable, and protected against damage, deterioration, or loss. Requirements and responsibilities for record transmittal, distribution, retention, maintenance, and disposition shall be established and documented.

NOTE: A Quality Assurance Record is defined as a completed document that furnishes evidence of the quality of items and/or activities affecting quality.

17.2.2 Administration of Records

17.2.2.1 A records system(s) shall be established at the earliest practical time consistent with the schedule for accomplishing work activities and in compliance with the requirements of this Manual. The records system(s) shall be defined, implemented, and enforced.

17.2.2.2 The applicable design specifications, procurement documents, test procedures, operational procedures, or other documents shall specify the records to be generated, supplied, or maintained by or for the owner. Documents that are designated records shall be legible, accurate, and completed appropriate to the work accomplished.

17.2.2.3 Documents will be considered valid records only if stamped, initialed, or signed and dated by the Group Quality Director/Project Quality Manager or otherwise authenticated. This authentication may take the form of a statement by the responsible individual or organization. Handwritten signatures are not required if the document is clearly identified as a statement by the reporting individual or organization. These records may be originals or reproduced copies.

17.2.2.4 Records shall be indexed. The indexing system(s) shall include, as a minimum, record retention times and the location of the record within the record system.

17.2.2.5 Records shall be distributed, handled, and controlled in accordance with written procedures or instructions.

17.2.2.6 Records and/or indexing system(s) shall provide sufficient information to permit identification between the record and the item(s) or activity(ies) to which it applies.

17.2.2.7 Records shall be classified as Lifetime or Nonpermanent in accordance with the criteria given in items a. and b. below:

a. Lifetime Records. Lifetime records are those that meet one or more of the following criteria:

(1) those which would be of significant value in demonstrating capability for safe operation,

(2) those which would be of significant value in maintaining, reworking, repairing, replacing, or modifying an item,

(3) those which would be of significant value in determining the cause of an accident or malfunction of an item, or,

(4) those which provide required baseline data for in-service inspections.

Lifetime records are required to be maintained by or for the facility owner for the life of the particular item while it is installed in the facility or stored for future use.

b. Nonpermanent Records. Nonpermanent records are those required to show evidence that an activity was performed in accordance with the applicable requirements but need not be retained for the life of the item because they do not meet the criteria for lifetime records.

17.2.2.8 The retention period for nonpermanent records shall be established in writing.

17.2.2.9 Records may be corrected in accordance with procedures which provide for appropriate review or approval by the originating organization. The correction shall include the date and the identification of the person authorized to issue such correction.

17.2.3 Receipt of Quality Assurance Records

17.2.3.1 Protection from damage or loss during the time that records are in the possession of MK shall be provided.

17.2.3.2 The Group Quality Director/Project Quality Manager shall designate individuals responsible for receiving records. These individuals shall be responsible for organizing and implementing a system of receipt control of records for permanent and temporary storage.

17.2.3.3 Receipt control systems shall include the following, as a minimum:

a. designation of the required records;

b. identification of records received;

c. procedures or instructions for receipt and inspection of incoming records; and,

d. a method for submittal of completed records to the storage facility without unnecessary delay.

17.2.3.4 Each receipt control system shall be structured to permit a current and accurate assessment of the status of records during the receiving process.

17.2.4 Storage, Preservation, and Safekeeping of Quality Assurance Records

17.2.4.1 Records shall be stored in predetermined location(s) that meet the requirements of applicable standards, codes, and regulatory agencies.

17.2.4.2 Prior to storage of records, a written storage procedure shall be prepared and responsibility assigned for enforcing the requirements of that procedure. This procedure shall include, as a minimum:

a. a description of the storage facility;

b. the filing system to be used;

c. a method for verifying that the records received are in agreement with the transmittal document and that the records are legible;

d. a method of verifying that the records are those designated (see paragraph 17.2.3.2);

e. the rules governing access to and control of the files;

f. a method for maintaining control of and accountability for records removed from the storage facility; and,

g. a method for filing supplemental information and disposing of superseded records.

17.2.4.3 Records shall be stored in a manner approved by the Group Quality Director/Project Quality Manager and the client (if applicable). In order to preclude deterioration of the records, the following requirements shall apply:

a. Provisions shall be made in the storage arrangement to prevent damage from moisture, temperature, and pressure;

b. Records shall be firmly attached in binders or placed in folders or envelopes for storage in steel file cabinets or on shelving in containers; and,

c. Provisions shall be made for special processed records (such as radiographs, photographs, negatives, microfilm, and magnetic media) to prevent damage from excessive light, stacking, electromagnetic fields, and temperature.

17.2.4.4 Security shall be established to preclude the entry of unauthorized personnel into the storage area. This security shall guard against larceny and vandalism. Measures shall be taken to provide for prompt replacement, restoration, or substitution of lost or damaged records.

17.2.4.5 Records shall be stored in facilities constructed and maintained in a manner which minimizes the risk of damage or destruction from the following:

a. natural disasters such as winds, floods, or fires;

b. environmental conditions such as high and low temperatures and humidity; and,

c. infestation of insects, mold, or rodents.

17.2.4.6 There are three satisfactory methods of providing storage facilities: single, alternate single, and dual.

a. Single Facility

(1) Design and construction of a single record storage facility shall meet the criteria of (a) through (i) below:

(a) reinforced concrete, concrete block, masonry, or equal construction;

(b) a floor and roof with drainage control. If a floor drain is provided, a check valve (or equal) shall be included;

(c) doors, structure and frames, and hardware shall be designed to comply with the requirements of a minimum two-hour fire rating;

(d) sealant applied over walls as a moisture or condensation barrier;

(e) surface sealant on floor providing a hard wear surface to minimize concrete dusting;

(f) foundation sealant and provisions for drainage;

(g) forced air circulation with filter system;

(h) fire protection system; and,

(i) only those penetrations used exclusively for fire protection, communication, lighting, or temperature/ humidity control are allowed; all such penetrations shall be sealed or dampered to comply with the minimum two-hour fire protection rating.

(2) The construction details shall be reviewed for adequacy of protection of contents by a person who is competent in the technical field of fire protection and fire extinguishing.

(3) If the facility is located within a building or structure, the environment and construction of that building can provide a portion or all of these criteria.

b. Alternate Single Facilities

The following are acceptable alternatives to paragraph 17.2.4.6.a for a single facility:

(1) two-hour fire rated vault meeting NFPA 232-1986 or NFPA 232AM-1986 or both;

(2) two-hour fire rated Class B file containers meeting the requirements of NFPA 232-1986 or NFPA 232AM-1986 or both; or,

(3) two-hour fire rated file room meeting the requirements of NFPA 232-1986 or NFPA 232AM-1986 or both with the following additional provisions:

(a) early warning fire detection and automatic fire suppression capability with electronic supervision at a constantly attended central station;

(b) records storage in fully enclosed metal cabinets;

(c) adequate access and aisle ways;

(d) prohibition in the room of work not directly associated with record storage or retrieval;

(e) prohibition in the room of smoking, eating, or drinking; and,

(f) two-hour fire rated dampers on doors in all boundary penetrations.

c. Dual Facilities

If storage at dual facilities for each record is provided, the facilities shall be at locations sufficiently remote from each other to eliminate the chance of exposure to a simultaneous hazard. Each facility is not required to satisfy the requirements of paragraph 17.2.4.6.a, but shall meet the other requirements of this Manual.

17.2.5 Retrieval of Records

17.2.5.1 Storage systems shall provide for retrieval of information in accordance with planned retrieval times based upon the record type.

17.2.5.2 A list shall be maintained designating those personnel who shall have access to the files.

17.2.5.3 Records maintained by a Supplier at the Supplier's facility or other location shall be accessible to MK or their designated alternate, e.g., the owner.

17.2.6 Dispositioning of Records

17.2.6.1 Records accumulated at various locations, prior to transfer, shall be made accessible to the owner directly or through the procuring organization. Record submittals shall be inventoried, receipts acknowledged, and records processed in accordance with this Manual.

17.2.6.2 Various regulatory agencies have requirements concerning records that are within the scope of this Manual. The most stringent requirements shall be used in determining the final disposition.

EXHIBIT 51
PAGE 116 OF 167 PAGE(S)

17.2.6.3 Nonpermanent records shall not be disposed of until all the applicable conditions listed below are satisfied:

a. items are released for shipment, a Code Data Report is signed, or a Code Symbol Stamp is affixed;

b. regulatory requirements are satisfied;

c. operational status permits;

d. warranty consideration is satisfied; and,

e. purchaser's requirements are satisfied.

E17

EXHIBIT 34
PAGE 117 OF 127 PAGE(S)

18.0 ASSESSMENTS

18.1 Scope

This section describes the requirements for planning, scheduling, and performing quality assurance assessments which are performed to verify compliance with all aspects of this Quality Assurance Program. Detailed specifics for implementation and appropriate forms are documented in implementing procedures and instructions.

18.2 Requirements

18.2.1 General

Internal or external quality assurance assessments, or both, shall be scheduled in a manner to provide coverage and coordination with ongoing quality assurance program activities. Assessments are scheduled at a frequency commensurate with the status and importance of the activity. The assessment schedule shall be reviewed periodically and revised as necessary to assure that coverage is maintained current. Regularly scheduled assessments shall be supplemented by additional assessments of specific subjects when necessary to provide adequate coverage.

18.2.2 Assessment Preparation

18.2.2.1 The Group Quality Director/Project Quality Manager shall select and assign Lead Assessors who are independent of any direct responsibility for performance of the activities which they will assess, including internal assessments. Lead Assessors shall assign the assessment team. Assessment personnel shall have sufficient authority and organizational freedom to make the assessment process meaningful and effective.

18.2.2.2 An assessment team shall be identified prior to the beginning of each assessment. This team shall contain one or more assessors and shall have an individual appointed to lead the team who organizes and directs the assessment, coordinates the preparation and issuance of the assessment report, and evaluates responses. The assessment team leader, a Lead Assessor, shall ensure that the assessment team is prepared prior to initiation of the assessment. Assessment personnel (Assessors and Lead Assessors) shall be certified in accordance with paragraph 18.2.8 of this Manual.

18.2.2.3 The Lead Assessor shall develop and document an assessment plan for each assessment. This plan shall identify the assessment scope, requirements, assessment personnel, activities to be assessed, organizations to be notified, applicable documents, schedule, and written procedures or checklists.

EXHIBIT 3Y
PAGE 118 OF 127 PAGE(S)

18.2.3 Assessment Performance

Assessments shall be performed in accordance with written procedures or checklists as early in the life of the activity as practical and shall be continued at intervals consistent with the schedule for accomplishing the activity. Elements that have been selected for assessment shall be evaluated against specified requirements. Objective evidence shall be examined to the depth necessary to determine if these elements are being implemented effectively. Assessment results shall be documented by the assessing personnel and shall be reviewed by management having responsibility for the area assessed. Conditions requiring prompt corrective action shall be reported immediately to management of the assessed organization.

18.2.4 Assessment Report

The assessment report shall be signed by the Lead Assessor, issued, and include the following information, as appropriate:

a. description of the assessment scope;

b. identification of the Assessors;

c. identification of persons contacted during assessment activities;

d. summary of assessment results, including a statement on the effectiveness of the quality assurance program elements which were assessed; and,

e. description of each reported adverse assessment finding in sufficient detail to enable corrective action to be taken by the assessed organization.

18.2.5 Assessment Response

Management of the assessed organization or activity shall investigate adverse assessment findings, schedule corrective action, including measures to prevent recurrence, and notify the appropriate organization in writing of action taken or planned. The adequacy of assessment responses shall be evaluated by the Group Quality Director/Project Quality Manager.

18.2.6 Follow-up Action

Follow-up action shall be taken to verify whether corrective action is accomplished as scheduled.

EXHIBIT 37
PAGE 119 OF 127 PAGE(S)

DOC. NO 3-87-013

18.2.7 Assessment Records

Assessment records shall include, as a minimum, assessment plans, assessment reports, written replies, and the record of completion of corrective action. These records shall be maintained by the Group Quality Director/Project Quality Manager.

18.2.8 Quality Assurance Assessment Personnel

18.2.8.1 Candidates for certification as Lead Assessor shall meet the following requirements:

a. Communication Skills - The prospective Lead Assessor shall have capability to communicate effectively, both in writing and orally. These skills shall be attested to in writing by the Group Quality Director/Project Quality Manager.

b. Training - Prospective Lead Assessors shall have training to the extent necessary to assure their competence in assessment skills.

Training in the following areas shall be given based upon the Group Quality Director's/Project Quality Manager's evaluation of the particular needs of each prospective Lead Assessor.

(1) Knowledge and understanding of this Manual and nuclear-related codes, standards, regulations, and regulatory guides, as applicable,

(2) General structure of quality assurance programs as a whole and applicable elements as defined in this Manual,

(3) Assessment techniques of examining, questioning, evaluating, and reporting; methods of identifying and following up on corrective action items; and closing out assessment findings,

(4) Assessment planning in the quality-related functions for the following activities: design, purchasing, fabrication, handling, shipping, storage, cleaning, erection, installation, inspection, testing, statistics, nondestructive examination, maintenance, repair, operation, modification of nuclear facilities or associated components, and safety aspects of the nuclear facility, and,

(5) On-the-job training to include applicable elements of the assessment program.

EXHIBIT 34
PAGE 100 OF 127 PAGE(S)

c. Assessment Participation - The prospective Lead Assessor shall have participated in a minimum of five (5) quality assurance assessments within a period of time not to exceed three (3) years prior to the date of qualification, one assessment of which shall be a nuclear quality assurance assessment within one year prior to the date of qualification.

d. Examination - The prospective Lead Assessor shall pass an examination which evaluates the candidate's comprehension of and ability to apply the body of knowledge identified in paragraph 18.2.8.1.b. The test may be oral, written, practical, or any combination of the three types.

e. Maintenance of Proficiency - Lead Assessors shall maintain their proficiency through: regular and active participation in the assessment process; review and study of codes, standards, procedures, instructions, and other documents related to quality assurance program and program assessment; and participation in training programs. Based on annual evaluation, management may extend the qualification, require retraining, or require requalification. These evaluations shall be documented.

f. Requalification - Lead Assessors who fail to maintain their proficiency for a period of two years or more shall require requalification. Requalification shall include retraining in accordance with paragraph 18.2.8.1.b., and participation as an Assessor in at least one nuclear quality assurance assessment.

18.2.8.2 Candidates for certification as Assessor shall meet the following requirements:

a. Personnel selected for quality assurance assessment assignments, who may include technical specialists, management representatives, or assessors-in-training, shall have experience or training commensurate with the scope, complexity, or special nature of the activities to be assessed.

b. Assessors shall have, or be given, appropriate training or orientation to develop their competence for performing required assessments.

c. Competence of personnel for performance of the various assessment functions are developed by one or more of the following methods:

(1) Orientation to provide a working knowledge and understanding of this Manual and the assessing organization's procedures for implementing assessments and reporting results,

EXHIBIT 37
PAGE 121 OF 127 PAGE(S)

(2) Training programs to provide general and specialized training in assessment performance. General training shall include fundamentals, objectives, characteristics, organization, performance, and results of quality assessing. Specialized training shall include methods of examining, questioning, evaluating, and documenting specific assessment items and methods of closing out assessment findings, and,

(3) On-the-job training, guidance, and counseling under the direct supervision of a Lead Assessor. Such training shall include planning, performing, reporting, and follow-up action involved in conducting assessments.

18.2.8.3 The administration of the Lead Assessor and Assessor qualification and certification program shall be as follows:

a. Organizational Responsibility - Training of Assessors shall be the responsibility of the Group Quality Director/Project Quality Manager. The GQD/PQM shall select and assign personnel who are independent of any direct responsibility for performance of the activities which they will assess. The Lead Assessor shall, prior to commencing the assessment, concur that assigned personnel collectively have experience or training commensurate with the scope, complexity, or special nature of the activities to be assessed.

b. Qualification Examination - The development and administration of the examination for a Lead Assessor, required by paragraph 18.2.8.1.d, is the responsibility of the Group Quality Director/Project Quality Manager. The Group Quality Director/Project Quality Manager may delegate this activity to an independent certifying agency, but shall retain responsibility for conformance of the examination and its administration to this Manual. Integrity of the examination is maintained by the Group Quality Director/Project Quality Manager or certifying agency through appropriate confidentiality of files and, where applicable, proctoring of examinations. Copies of the objective evidence regarding the type(s) and content of the examination(s) are retained in accordance with the requirements of paragraph 18.2.8.4.

EXHIBIT 37
PAGE 122 OF 127 PAGE(S)

18.2.8.4 Records of personnel qualifications for Assessors and Lead Assessors performing assessments shall be established and maintained by the Group Quality Director/Project Quality Manager. Certification records for Assessors/Lead Assessors shall contain the following as a minimum:

a. employer's name;

b. Assessor's/Lead Assessor's name;

c. date of certification or recertification;

d. basis of qualification (i.e., education, experience, communication skills, training, examination, etc); and,

e. signature of the Group Quality Director/Project Quality Manager.

Records for each Lead Assessor shall be maintained and updated annually by the Group Quality Director/Project Quality Manager.

E18

EXHIBIT 37
PAGE(S)

f. the corrective action which has been, is being, or will be taken; the name of the individual or organization responsible for the action; and the length of time that has been or will be taken to complete the action; and,

g. any advice related to the defect or failure to comply about the facility, activity, or basic component that has been, is being, or will be given to purchasers or licensees.

Note: In the case of a basic component which contains a defect or fails to comply, the number and location of all such components in use at, supplied for, or being supplied for one or more facilities or activities subject to the regulations in this part shall also be included in written reports.

4.2.3 The Group Quality Director is responsible for notifying the NRC, as indicated in the designation letter on Page 18 of this QAI, for any deviation that has been determined at the Group level to be reportable within 24 hours. This report shall be by transmittal of the "Determination Checklist for 10 CFR Part 21 Applicability" (Form QAI 1.1-1) and the attached report/interim report.

4.2.4 In the event that the determination is that MK does not have the capability to perform the evaluation, the Group Quality Director shall notify those clients that are affected that MK cannot complete the evaluation process. The Group Quality Director shall provide these clients with all information compiled to date. This shall occur within five days of this determination being made.

4.3 <u>Procurement Documents</u>

Project Quality Managers are responsible for assuring that each procurement or subcontract document generated at their project specifies, when applicable, that the provisions of 10 CFR Part 21 apply.

4.4 <u>Posting</u>

The following documents are to be posted and maintained in a conspicuous place within the MK Group offices and at project locations where the regulations of 10 CFR Part 21 apply:

a. 10 CFR Part 21;

b. Section 206 of the Energy Reorganization Act of 1974; and,

c. notification of the existence of this QAI.

4.5 <u>Records</u>

4.5.1 Records generated as a result of implementation of this QAI at project locations are controlled in accordance with the applicable project QA records procedure.

EXHIBIT 34

4.5.2 Records generated as a result of implementation of this QAI at the Group Level corporate office are controlled in accordance with QAI 17.1, "Quality Records".

4.5.3 Copies of all "Determination Checklist for 10 CFR Part 21 Applicability" (Form QAI 1.1-1) are to be retained as an MK QA Record whether or not a report was made to the NRC.

5.0 REFERENCED FORMS

a. Form QAI 1.1-1 -- "Determination Checklist for 10 CFR Part 21 Applicability"

MK RESPONSIBLE OFFICER DESIGNATION LETTER

MORRISON KNUDSEN CORPORATION
ENGINEERING, CONSTRUCTION
& ENVIRONMENTAL GROUP

MK FERGUSON PLAZA
1500 WEST 3RD STREET
CLEVELAND OHIO 44113-1406
PHONE (216) 575 3777
FAX (216) 520-8149

THOMAS H. ZARGES
PRESIDENT & CEO

January 19, 1996

Reporting of Defects and Noncompliances:

In accordance with the requirements of Title 10 Code of Federal Regulations, Part 21 (10CFR21), Mr. T. H. Zarges, President and CEO of Morrison Knudsen Corporation, Engineering and Construction Group, is hereby designated the "Responsible Officer" for Morrison Knudsen Corporation. A copy of this letter will be placed in the appropriate Morrison Knudsen Corporation Quality Program Manuals.

In accordance with 10CFR21, Section 21.21(c)(5), and effective this date, Mr. A. J. Walcutt, MK Group Quality Director, is authorized to act in my behalf as the "Responsible Officer" for Morrison Knudsen Corporation, Engineering and Construction Group.

Tom Zarges

T. H. Zarges
Morrison Knudsen Corporation
Engineering and Construction Group

cc: L. Pardi

EXHIBIT 39
PAGE 124 OF 127 PAGE(S)

SGT RESPONSIBLE OFFICER DESIGNATION LETTER

SGT
The Steam Generating Team

1500 WEST 3RD STREET
CLEVELAND, OHIO 44113-1408
PHONE (216) 523-5051
FAX (216) 523-6148

April 26, 1996

Reporting of Defects and Noncompliances:

In accordance with the requirements of Title 10 Code of Federal Regulations, Part 21 (10CFR21), Mr. M. D. Cepkauskas, President of The Steam Generating Team is hereby designated the "Responsible Officer" for The Steam Generating Team. A copy of this letter will be placed in the appropriate Steam Generating Team Quality Program Manual.

In accordance with 10CFR21, Section 21.21(c)(5), and effective this date, Mr. A. J. Walcutt, The Steam Generating Team Quality Director, is authorized to act in my behalf as the "Responsible Officer" for The Steam Generating Team.

M. D. Cepkauskas
President
The Steam Generating Team
SGT Ltd.

EXHIBIT 31
PAGE 127 OF 127 PAGE(S)

CASE NO 7-97-013