UNITED STATES
NUCLEAR REGULATORY COMMISSION
WASHINGTON, D.C. 20555-0001

July 11, 2000

MEMORANDUM TO: Susan F. Shankman, Deputy Director
Licensing and Inspection Directorate
Spent Fuel Project Office, NMSS

FROM: Steven Baggett, Project Manager
Licensing Section
Spent Fuel Project Office, NMSS

SUBJECT: SUMMARY OF JULY 6, 2000, MEETING WITH TRANSNUCLEAR WEST INC., REGARDING THE ADVANCED NUHOMS® STORAGE SYSTEM

On July 6, 2000, staff from the U.S. Nuclear Regulatory Commission's (NRC) Office of Nuclear Material Safety and Safeguards met with representatives from Transnuclear West Inc. (TN West) to discuss their application plans for the Advanced NUHOMS® storage system to be used in high seismic areas. Representatives from Southern California Edison Company (SCE) were present. SCE plans to use the storage system to store San Onofre Unit 1 spent reactor fuel in an independent spent fuel storage installation (ISFSI). SCE will be a general licensed user of the Advanced NUHOMS® cask design, if it is approved by NRC. Attachment 1 is the attendance list. Attachment 2 is the non-proprietary copy of the slides used during the presentation. A seismic specialist from the Office of Nuclear Reactor Regulation was also in attendance. The presentation was a follow-up to the March 23, 2000, meeting. The meeting was noticed on May 31, 2000.

The storage system will essentially be the same dry shielded canister approved in the MP-187 transportation Certificate of Compliance No. 9255 and in the Rancho Seco ISFSI License No. SNM-2510 and will be stored in a modified concrete horizontal storage module designed to withstand the seismic conditions of 1.5g horizontal and 1g vertical.

The meeting focused on the following topics:

- Advanced NUHOMS® design overview including a discussion of similarities and differences between the approved NUHOMS® system and the Advanced NUHOMS® design.
- Criticality, shielding, thermal, and structural analysis approaches that will be part of the application.
- A proprietary discussion of seismic considerations.
- Application submittal in September 2000.
- Application for a conforming amendment to the MP-187 in January 2001.
- Future technical meetings.

NRC staff discussed the rules of engagement and recommended that TN West provide some additional information in its application with regard to its needs for completion of the licensing action with appropriate justification. No proprietary information was disseminated, and no regulatory decisions were requested or made.

Docket Nos.: 72-1004, 72-41, 72-1029

Attachments: 1- Attendance List
2- Handouts

DISTRIBUTION: (Closes TAC :L23096/Review 030S)

Dockets	NRC File Center	PUBLIC	NMSS R/F	SFPO R/F
NJensen, OGC	NRC Attendees	SO'Connor	ANorris (Closes L23096)	
SGagner, OPA				

C:\MYFILES\BACKUP\wp{wp}.bk1

OFC:	SFPO	E	SFPO	E	SFPO	
NAME:	SBaggett		WTharpe		ELeeds	
DATE:	7/ 11 /00		7/ 10 /00		7/ 11 /00	

OFFICIAL RECORD COPY

NRC staff discussed the rules of engagement and recommended that TN West provide some additional information in its application with regard to its needs for completion of the licensing action with appropriate justification. No proprietary information was disseminated, and no regulatory decisions were requested or made.

Docket Nos.: 72-1004, 72-41, 72-1029

Attachments: 1- Attendance List
2- Handouts

July 6, 2000, Meeting

between the Nuclear Regulatory Commission and

Transnuclear West Inc.

ATTENDANCE LIST

Name	Affiliation
E. William Brach	NRC/NMSS/SFPO
Eric Leeds	NRC/NMSS/SFPO
Jack Guttmann	NRC/NMSS/SFPO
Steven Baggett	NRC/NMSS/SFPO
David Tang	NRC/NMSS/SFPO
KC Leu	NRC/NMSS/SFPO
Julia Myers	NRC/NMSS/SFPO
Chris Regan	NRC/NMSS/SFPO
Carl Withee	NRC/NMSS/SFPO
Goutam Bagchi	NRC/NRR/DE
William Huffman	NRC/NRR/DLPM
Robert Grubb	Transnuclear West Inc.
Jayant Bondre	Transnuclear West Inc.
Ian McInness	Transnuclear West Inc.
Usama Farradj	Transnuclear West Inc.
Robert Kennedy	Structural Mechanics Consulting
A. E. Scherer	Southern California Edison Co.
David Pilmer	Southern California Edison Co.
Brigitte Gossett	Southern California Edison Co.
Jim Reilly	Southern California Edison Co.
Jeffrey Summy	Southern California Edison Co.
Torrey Yee	Southern California Edison Co.
Steve Schulin	The IBEX Group

Attachment 1

Review of New NUHOMS® High Seismic General License SAR Submittal

7/6/00 Meeting, Rockville MD

TRANSNUCLEAR WEST

AGENDA

- **Non-Proprietary**
  - **Purpose**
  - **System Design Overview**
  - **Comparison to previously approved applications**
    - Structural
    - Shielding
    - Criticality
    - Thermal
  - **Summary**
- **Proprietary**
  - **Seismic**

PURPOSE

- Review system design for new High Seismic General License
  - Advanced HSM
  - 24PT1 DSC
- Compare design configuration of system to previously approved system designs (72-11 & 71-9255)
- Identify differences to facilitate NRC review/planning
  - Major differences due to higher seismic loads & lower dose acceptance criteria
- Review SAR submittal schedule
- Review Transnuclear West and Customer Need Dates for C of C
- Review plans for future Transnuclear West/NRC meetings

System Design Overview - Horizontal Storage Module

- **Major Changes in AHSM Due to High Seismic Demands & Greatly Improved Shielding for Congested Sites**
  - Heat Load Design Basis Same - 24kW
  - Seismic Design Basis - Six Times Higher (0.25g - 1.5g)
    - Requires tying modules together in minimum groups of three
    - Permits sliding but essentially no uplift of array
  - Concrete Temperatures Increased Due to Increased Shielding
    - Concrete strength reductions per NUREG 1536 established by testing
  - Support Structure Changed to Stainless Steel & Location Revised to Support DSC to Meet Seismic Demands
  - Modules Sized to Take Either Long (BWR) or Short (PWR) DSC's

System Design Overview - Horizontal Storage Module

	Standardized NUHOMS® HSM	Advanced NUHOMS® HSM
Size	15'-0" h x 10'-4" w x 21"-0" l	18'-6" h x 8'-5" w x 23'-7" l
Concrete	5000 psi, ACI 349-92	5000 psi, ACI 349-97
Design Heat Load	24kw	24kw
Support Structure	Carbon steel, AISC	Stainless steel, AISC
Design Earthquake	0.25g horizontal, 0.17g vertical	1.5g horizontal, 1.0g vertical
Minimum Size Array	Single module	3 modules
Module-Module Ties	Not required	Shear keys plus top & bottom ties

TRANSNUCLEAR WEST

System Design Overview - Horizontal Storage Module

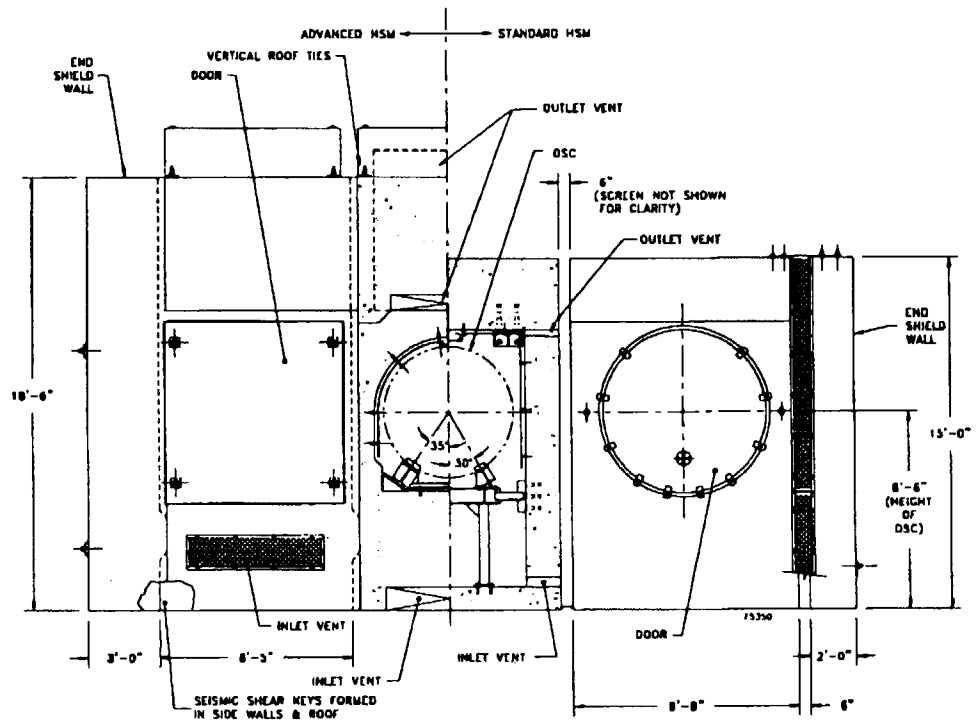

TRANSNUCLEAR WEST

System Design Overview - Horizontal Storage Module

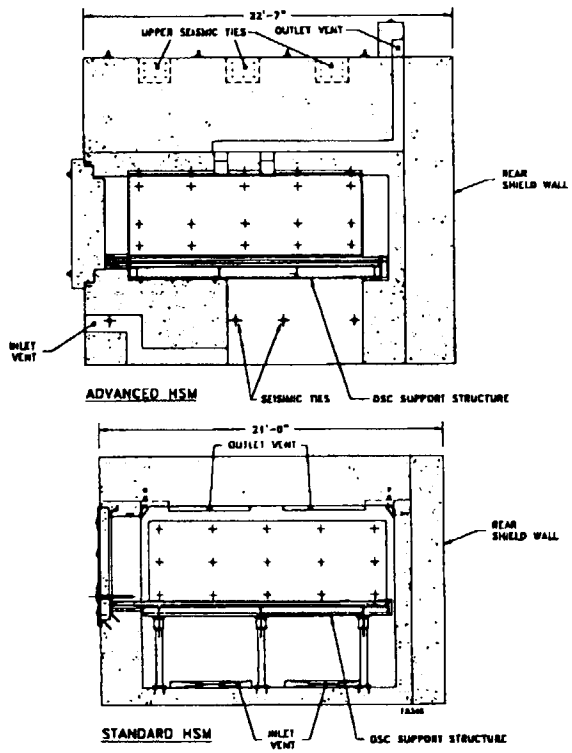

TRANSNUCLEAR WEST

System Design Overview - Dry Shielded Canisters

- **The 24PT1 DSC is very similar to FO-DSC licensed per C of C 71-9255 and Docket 72-11**
  - Shell material changed from type 304 to type 316 stainless - minor changes in thickness of cover plates
  - Spacer discs relocated to meet weight distribution of W17x17 & W14x14 fuel
  - Design basis heat load increased from 13.5kW to 14kW
  - Includes stainless steel clad & MOX fuel
  - Support rods modified to reduce calculated stresses
- **Payload application will fully address storage of W14x14 fuel**
  - Future amendments will address storage of other fuel types (e.g., W17 x 17, CE, BWR fuel, etc.)

System Design Overview - Dry Shielded Canister

	FO-DSC: Part 71 CofC 71-9255 Part 72 docket 72-11	24PT1 DSC
Fuel Spec	B&W 15x15 (Zircaloy clad)	W14x14, W17x17 – (MOX and stainless clad)
Heat Load	13.5 kw (0.09 kw/in.)	14kw (0.12 kw/in.)
Design Code	ASME B&PV 1992E, 1993A	ASME B&PV 1992E, 1994A
Shell Material	Type 304 stainless steel	Type 316 stainless steel
Size	186.3" long x ø67.19"	186.3" long x ø67.19"
Analyzed Shell Thickness	0.563" min. thickness	0.53" min. thickness
Spacer Discs	SA537, Class 2	SA537, Class 2
Support Rods	ø2" rod, ø3" sleeves	ø1¼" rod, ø3" sleeves
Preload	80 kips nominal	40 kips nominal
Guidesleeves	Stainless steel, fixed Boral poison	Stainless steel, fixed Boral poison
Design Basis Seismic Load	1.0g horizontal, 0.68g vertical	3g horizontal & vertical
Storage of Damaged Fuel	No	4 damaged fuel cans may be loaded into a single DSC similar to FF fuel can (71-9255)
Leakage Criteria	1×10^{-4} atmos.-cm.^{3}/sec	Leak tight per ANSI N14.5
DSC Spacer Disc Coating	electroless nickel	Darkened electroless nickel

TRANSNUCLEAR WEST

System Design Overview - Dry Shielded Canister

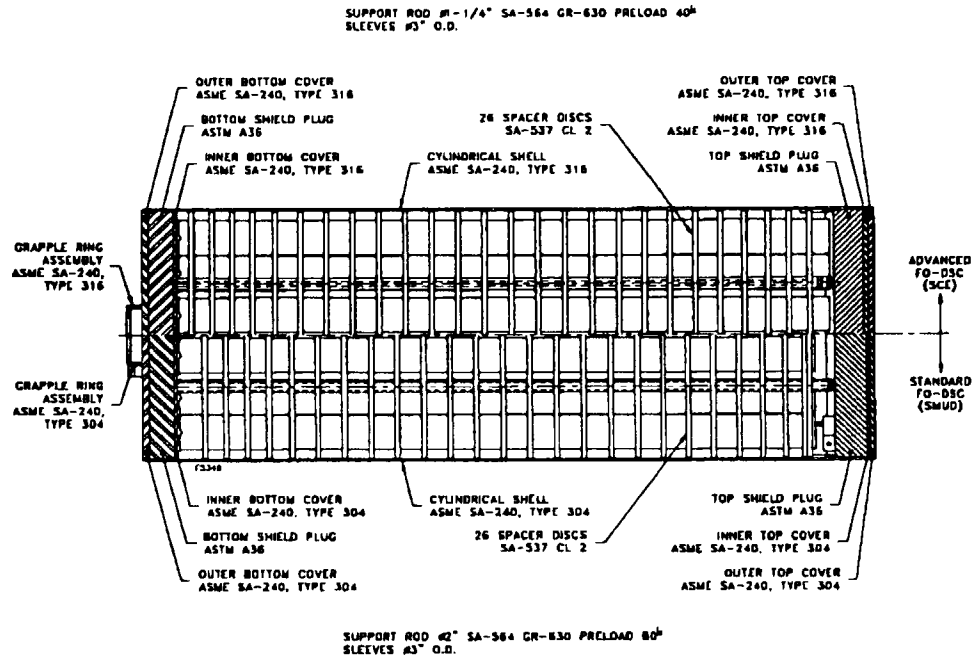

TRANSNUCLEAR WEST

Structural Analysis Overview - AHSM

- **Addresses both Concrete AHSM & DSC Support Steel**
- **Methodology**
  - Governing Industry Standards
    - ACI-349-97 (AHSM)
    - AISC (DSC Support Steel)
  - Overview of Methodology
    - Finite Element Analysis (ANSYS) for All Loading Cases
    - Rigid Body AHSM Analysis for Module Connections
    - Rigid Body AHSM and DSC for Maximum Seismic Accelerations
  - Computer Codes Used
    - ANSYS

Structural Analysis Overview - AHSM

- **Analyses Performed Overview of Cases Considered**
  - Normal:
    - Dead Weight
    - LL - 200 psf
    - T_N Operating Temperatures 0°, 70°, 104°F Ambient
    - W_W - Wind Loads (conservatively used tornado wind pressures)
    - R_O - Normal DSC Handling Load ± 60 Kips
  - Off-Normal:
    - T_O - Off-Normal Temperatures -40°, 117°F Ambient
    - R_A - Off-Normal DSC Handling Load 80 Kips insertion, 60 Kips retrieval

TRANSNUCLEAR WEST

Structural Analysis Overview - AHSM

- **Analyses Performed Overview of Cases Considered**
  - Accident:
    - FL - Flood Load - 50' Ht. of Water 15 fps Velocity
    - T_A - Accident Temperatures 40 Hour Blocked Vent with -40°F and 117 °F Ambient
    - W_T - Tornado wind and Missiles - Region I Design Basis, 360 mph max. wind speed
    - E_Q - Seismic

	Horizontal	Vertical
Base Unit	1.5g	1.0g
DSC Support Structure	1.5g	1.0g
Top Shield (Roof) Unit	2.25g	1.0g

TRANSNUCLEAR WEST

Structural Analysis Overview - AHSM

- **Differences Between Current Analysis and Previous NUHOMS® Submittals**
  1. High seismic loads cause modules to slide
  2. Modules interconnected to prevent rocking and relative sliding using ties and shear keys
  3. Support rails located at 35° vs. 30° (from vertical) for DSC seismic stability in transverse direction
  4. Module does not include base slab
  5. Module placed on pad with contact between adjacent modules
  6. Support rails are stainless steel and free to expand/contract
  7. DSC seismic restraints are installed with no gaps in the longitudinal direction

Structural Analysis Overview - AHSM

- **Summary of Analysis Results**
  - Governing cases
    - Top Shield Block - Seismic, Tornado Missile
    - AHSM Walls - Thermal
    - Support Steel - DSC Handling
    - Shield Walls - Tornado Missiles
    - Module to Module Connections - Seismic
  - Margins - Maximum Interaction Ratio's are:

	Standardized NUHOMS® HSM	**AHSM**
Concrete	0.94	0.95
Steel	0.93	0.82

TRANSNUCLEAR WEST

Structural Analysis Overview - Dry Shielded Canister

- **Methodology** — ANSYS and hand calculations
- **Models** — Same models used as presented in docket 72-11
- **Design Loads**
  - Controlling load combinations developed to envelope Part 71 & Part 72 criteria
  - Same as presented in docket 72-11 & FO-DSC CofC 71-9255
  - Design Basis drop loads for Part 72 - consider realistic drops
    - Side drop of 75g - same as FO-DSC
    - Corner drop of 25g - same as FO-DSC
    - No end drop - canister/cask is not handled vertically under Part 72 operations.
    - End drops are evaluated for Part 71 and Part 50
- **DSC Components:** DSC shell includes cover plates & shield plugs

  Basket Assembly components:
    - Spacer discs
    - Guidesleeves
    - Fuel spacers
    - Support rods
    - Damaged fuel cans

TRANSNUCLEAR WEST

Structural Analysis Overview - DSC Shell Assembly

- **Analyses Performed Overview of Cases Considered**
  - Normal/Off-Normal:
    - Dead Weight
    - On-site Handling
    - Thermal
    - Pressure
  - Accident:
    - Part 72 Postulated Side Drop (75g)
    - Part 72 Postulated Corner Drop (25g)
    - Seismic
    - Accident Pressure per NUREG 1536

Structural Analysis Overview - DSC Shell Assembly

- **Methodology**
  - ANSYS Finite Element Stress Model
- **Criteria**
  - ASME Section III, Subsection NB, Plus Code Case N-595-1

Structural Analysis Overview - DSC Shell Assembly

- **Differences Between Current Analysis and Previous NUHOMS® Submittals**
  - Top Inner and Outer Cover Plates Thicker
  - Reduced Shell Thickness Analyzed in Finite Element Model *(No change in nominal plate thickness specified)*

Structural Analysis Overview - DSC Shell Assembly

- **Summary of Analysis Results**
  - Governing cases
  - Margins
  - Comparison to previous submittals

Service Level	Component	Load	24PT1 DSC	FO-DSC
A/B	Shell	AHSM Unloading	0.92	0.90
C	Shell	AHSM Unloading	0.97	0.93
D	Outer Top Cover Plate	Side Drop	0.81	0.91

Structural Analysis Overview - DSC Spacer Discs

- **Analyses Performed Overview of Cases Considered**
  - Normal/Off-Normal:
    - Dead Weight
    - On-site Handling
    - Thermal
  - Accident:
    - Part 72 Postulated Side Drop (75g)
    - Part 72 Postulated Corner Drop (25g)
    - Seismic

Structural Analysis Overview - DSC Spacer Discs

- **Methodology**
  - ANSYS Elastic Analysis
    - Differential Thermal Stress
    - Vertical Loads
  - ANSYS Elastic/Plastic Stress Analysis
    - 0°, 18.5°, and 45° Side Drops
  - ANSYS Stability Analysis
- **Criteria**
  - ASME Section III, Subsection NG Criteria
- **Major assumptions**
  - Design Basis Loads Applied to Spacer Disc Model Same as FO-DSC
  - Same Boundary Conditions & Geometry as FO-DSC

Structural Analysis Overview - DSC Spacer Discs

- **Differences Between Current Analysis and Previous NUHOMS® Submittals**
  - Spacing Modified for Part 71 Loading to increase capacity for slap-down drops
  - Requested ASME Code Case BC00-275 for Material Stress Allowables up to 850°F to increase time for vacuum drying case. This is due to the increased heat load per inch discussed earlier.

Structural Analysis Overview - DSC Spacer Discs

- **Summary of Analysis Results**
  - Governing Cases
    - 75g Side Drop
    - Vacuum Drying

Load Case	Maximum Stress Ratio	
	24PT1 DSC	FO-DSC
Vacuum Drying	Meets NG 3828	0.80
75g Side Drop	1.0	0.99

TRANSNUCLEAR WEST

Structural Analysis Overview - DSC Support Rods

- **Analyses Performed Overview of Cases Considered**
  - Normal:
    - Dead Weight (Horizontal/Vertical)
    - On-site Handling
    - 71.71(c)(7) One Foot Side Drop (≈25g)
  - Accident:
    - Seismic
    - Part 72 Side Drop (75g)
    - Part 72 Corner Drop (25g)
    - Part 71 End Drops (71.73(c)(i))
    - Part 71 Side Drops (71.73(c)(i))

Structural Analysis Overview - DSC Support Rods

- **Methodology**
  - ANSYS Beam Model for Load Distribution
  - Preload
  - Axial/Bending from Spacer Discs
  - Top/Bottom End Drops
  - Fixed/Pinned End Conditions

Structural Analysis Overview - DSC Support Rods

- **Differences Between Current Analysis and Previous NUHOMS® Submittals**
  - Varied Rod Dimensions (Add Material to Most Highly Loaded Parts) & reduce design preload

Design	Overall O.D.	Rod O.D.	Preload	Maximum Interaction
FO-DSC	3.00	2.00	80 Kips	0.94
24PT1 DSC	3.00	1.25	40 Kips	0.58

  - Revised Disc Spacing at Basket Ends

TRANSNUCLEAR WEST

Structural Analysis Overview - DSC Support Rods

- **Summary of Analysis Results**
  - Governing Cases
    - Part 71 End Drop
  - Margins
    - Maximum Spacer Sleeve Interaction < 0.60
    - Maximum Rod Stress Occurs during Initial Preload
  - Comparison to Previous Submittals
    - Significant Increase in Margin

Structural Analysis Overview - DSC Guidesleeves

- **Analyses Performed Overview of Cases Considered**
  - Normal:
    - Dead Weight (Horizontal/Vertical)
    - On-site Handling
    - 71.71(c)(7) One Foot Side Drop (≈25g)
  - Accident:
    - Part 72 Drops
      - 75g Side Drop
      - 25g Corner Drop
    - Part 71 Drops (71.73(c)(i))
      - End Drop
      - Side Drop

Structural Analysis Overview - DSC Guidesleeves

- **Methodology**
  - Consistent with FO DSC Part 72, Analyses (docket 72-11)
  - ANSYS E/P Analysis
    - Guidesleeve Accident Side Drop
  - ANSYS Elastic Analysis
    - Guidesleeve Normal Condition Side Drop (71.71(c)(3))
    - Horizontal Dead Weight
    - Fuel Spacer End Plates
  - ANSYS Stability Analysis
    - Fuel Spacer External Pressure
  - Hand Calculations for all Other Analyses
    - Guidesleeve Axial Loading
    - Oversleeves
  - Damaged Fuel Cans Similar to Guidesleeves

Structural Analysis Overview - DSC Guidesleeves

- **Differences between Current Analysis and Previous NUHOMS® Submittals**
  - No Significant Differences in Guide Sleeve/Over Sleeve/Neutron Absorber Design or Analysis
  - Addition of Fuel Spacers for W14x14 Fuel
  - Addition of Damaged Fuel Canisters

Structural Analysis Overview - DSC Guidesleeves

- **Summary of Analysis Results**
  - Governing cases
    - Part 71.71(c)(7) One Foot Side Drop (Normal)
    - Part 71.73(c)(1) Thirty Foot Side Drop (Accident)
  - Margins
    - Normal Drop: 0.94 ($P_m + P_b$)
    - Accident Drop: 0.52 ($P_m + P_b$)
    - Oversleeve and Fuel Spacer Stress Are Low
  - Comparison to previous submittals
    - Results Similar to FO-DSC Part 72 Analyses

Structural Analysis Overview - Summary

- HSM Configuration Significantly Revised but Analytical Results Are Same
- 24PT1-DSC Is Very Similar to That Already Reviewed by NRC
- Analytical Methodology Used for All Components Is Same As Previously Licensed
- Results Have More Margin Than the Standard Design Even Though Significantly Higher Seismic Loads and Shielding

Analysis Overview - Thermal

- **Analyses Performed**
  - Determination of Fuel Cladding Temperature Limits
  - AHSM Thermal Evaluation for Normal, Off-Normal, and Accident Conditions of Operation
  - 24PT1-DSC Thermal Evaluation During Storage and Transfer for Normal, Off-Normal, and Accident Conditions of Operation
  - 24PT1-DSC Pressure Evaluation for Normal, Off-Normal, and Accident Conditions of Operation

Analysis Overview - Thermal

Fuel Cladding Temperature Limit Calculation

- **Methodology**
  - For stainless steel clad fuel - methodology is based on EPRI Report TR-106440, which has been accepted by the NRC as an acceptable methodology for other dry storage vendors.
  - For zircalloy clad fuel (MOX assemblies) - methodology is based on PNL-6189, which is consistent with previous NUHOMS® submittals and ISG-11 to NUREG 1536.
  - Short term limits for stainless steel clad fuel are based on criteria from NUREG 1536.
  - Short term limits for zircalloy fuel based on PNL-4835/NUREG 1536
  - Rod internal pressures and temperatures, and waterside corrosion data was obtained from the fuel vendor.

Analysis Overview - Thermal

AHSM Thermal Evaluation

- **Methodology**
  - Same as the standard HSM methodology
  - Three-dimensional model of the concrete module was constructed using HEATING7 Code

Analysis Overview - Thermal

24PT1-DSC Thermal Evaluation

- **Methodology**
  - ASME Code maximum allowable temperatures used as criteria for structural components.
  - Three-dimensional model of 24PT1-DSC was constructed with HEATING7 Code.
  - Boundary conditions of model derived in AHSM thermal model and transfer cask model which is consistent with previous NUHOMS® submittals.

Analysis Overview - Thermal

24PT1-DSC Cavity Pressure Evaluation

- **Methodology**
  - NUREG 1536 guidelines used for rod rupture and fission gas release fraction.
  - Fission gas production is based on calculated results from source term evaluation.
  - Methodology is identical to previous NUHOMS® submittals.

Analysis Overview - Thermal

Summary of Thermal Results (calculated/limit)

Component	Normal (°F)	Off-Normal (°F)	Accident (°F)
Concrete	219/300	231/300	392 (NUREG 1536/ testing)
DSC Materials[1,2]	658/700	658/700	695/700
SS 304 Fuel Cladding	604/690	658/1058	749/1058
Zirc Fuel Cladding	604/618	658/1058	749/1058

1 Results shown for the maximum local spacer disc temperature.

2 For the vacuum drying condition, the maximum temperature is 749°F with no time limit and 700°F with a time limit.

Analysis Overview - Thermal

Summary of Pressure Results (calculated/limit):

Normal (psig):	9.8/10
Off-Normal (psig)	12.2/20
Accident (psig)	42.7/60

Summary

- Thermal Analysis Methodology, Computer Codes are the same as Previous NUHOMS® Submittals
- Calculated Temperatures and Pressures are below their Design Limits
- Thermal and Pressure Stresses are also within Code Allowables

CRITICALITY EVALUATION OVERVIEW

Advanced NUHOMS® Meets 10CFR72.124 Criticality

- **Criticality Control is Supplied by**
  - Fixed Neutron Poisons
  - Assembly Separation by the Guide Sleeves and Spacer Discs
- **Normal, Off-Normal and Accident Conditions (Including Transportation Conditions) Evaluated**
- **Burnup Credit is not Used**
- **MOX Fuel is also Considered**

State of the Art Computer Codes Used In Analysis

- **KENO 5A and the HR-16 Library Used in the Past**
  - CSAS25 of SCALE 4.4PC with the 44 Group ENDFV Cross Section Library (Distributed with SCALE)
  - CSAS25 automates cross section processing
  - 44 Group Library is the latest library developed by ORNL for Cask LWR Analysis

Criticality Similar to NUHOMS® MP187 & Docket # 72-11

- **Worst Case Conditions Determined and Modeled in Analysis for Failed Fuel 14 rods assumed to be failed**
  - All 24 Fuel Assemblies are considered failed
  - Each Failed Fuel Assembly as placed in a failed fuel canister which is conservatively ignored in the Criticality Analysis.

Worst Case Conditions Used to Determine Bounding k_{eff}

- **Limiting USL is 0.9396 based on 137 benchmark critical**
- **All results are for 24 identical assemblies (MOX and UO2)**
- **Analysis assumed 24 MOX assemblies which bound the mixture of MOX and UO2 assemblies**
- **Maximum k_{eff} ($k_{KENO} + 2\sigma$)**
  - WE 14x14 Stainless Clad Fuel at 4.0 wt% U-235 is 0.8677
  - WE 14x14 Mixed Oxide Fuel is 0.9025 (Assumed 24 when actually 4 max)
  - Damaged WE 14x14 Fuel is 0.9368

TRANSNUCLEAR WEST

Summary

- Analysis Methodology Similar to Previous NUHOMS® Submittals
- Criticality Safety Limits for Both Storage and Transportation Conditions are Satisfied

SHIELDING EVALTUATION OVERVIEW

TRANSNUCLEAR WEST

Bounding Source Terms 45GWd/MTU 10-Yr Cooled Fuel

WE 14x14 Stainless Steel Clad Fuel

Burnup (MWd/MTU)	Minimum Initial Enrichment (wt% U235)	Minimum Cooling Time (Years)
45,000	3.8	10
40,000	3.4	10
35,000	3.16	10

WE 14x14 Mixed Oxide Fuel

- 25,000 MWd/MTU and 20-Year Cooled

TRANSNUCLEAR WEST

Bounding NFAH Source Term Thimble Plug

WE 14x14 SS Component	Number of Cycles of Operation	Minimum Cooling Time (Years)
RCCA	11	10
Thimble Plugs	11	10
Neutron Source	4	10

State of the Art Computer Codes / Source Terms Analysis

- **SAS2H of SCALE 4.4PC used to Generate Source Terms**
  - Fuel: Bottom Nozzle, In-Core Fuel, Plenum, and Top Nozzle
  - NFAH: In-Core, Plenum, Top Nozzle and Above the Top Nozzle Regions
- **ORIGEN2 used for NUHOMS®-MP187; Docket # 72-11; and Standardized NUHOMS® System**

State of the Art Computer Codes / Dose Rates Analysis

- **DORT / Cask-81 Library**
  - 2-D code.
  - Very Conservative for the AHSM
  - Representative of the Transfer Cask
  - The Cask-81 Library used for NUHOMS®-MP187; Part 72 Docket No. 72-11 Site Specific and Standardized System
  - DORT used for NUHOMS®-MP187; Part 72 Docket # 72-11
  - ANISN/QAD 1-D Codes used for the used for NUHOMS® Standardized System

AHSM Designed for ALARA

AHSM Surface	Component	Maximum (mrem/hr)	Minimum (mrem/hr)	Weighted Average (mrem/hr)	CSAR 4A Weighted Average mrem/hr
Front	Gamma	45.27	2.E-02	1.89	23.4
	Neutron	0.54	7.E-04	0.04	
	Total	**45.81**	**2.E-02**	**1.93**	
Roof	Gamma	3.57	4.E-04	0.03	26.6
	Neutron	0.05	2.E-05	0.0009	
	Total	**3.62**	**4.E-04**	**0.03**	

Back Wall Weighted Average Dose Rate 0.005 mrem/hr

Side Wall Weighted Average Dose Rate 0.3 mrem/hr

Peak Dose Rates On Surface of AHSM Are Very Low

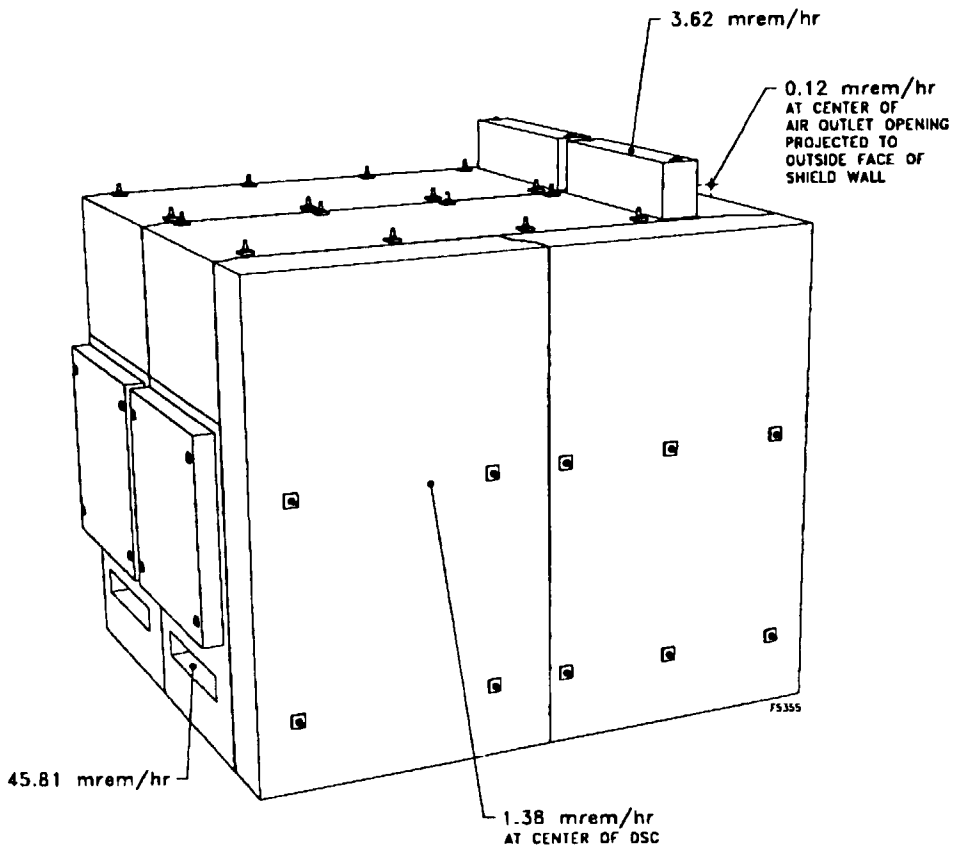

TRANSNUCLEAR WEST

Summary

- AHSM Provides Superior Shielding Performance
- Dose Rates are ALARA

SUMMARY

- **New General License DSC configuration based on:**
  - Part 72 Docket 72-11 DSC
  - TN West Part 71 C of C No. 71-9255 DSC
- **Part 72 SAR DSC and HSM criteria and analyses are based on TN West Part 72 C of C 72-1004/ Docket 72-11/71-9255**
- **Primary difference between upcoming SAR and previous C of Cs is the high seismic capacity and associated design changes to the HSM**
- **Part 72 SAR analysis results are similar to those approved for previous C of Cs**

Summary

- **Part 72 SAR to be submitted by late September 2000**
- **TN West to submit associated calculations (Proprietary documents) 2 weeks after SAR**
- **TN West/SCE Part 72 schedule need dates:**
  - Draft SER - 9/01
  - C of C issue - 9/02
  - SCE SONGS 1 Fuel Load - 4/03
- **TN West/SCE Part 71 schedule need dates:**
  - submit amendment to 71-9255 - 1/01
  - C of C issue - 9/02
- **Proposed post submittal follow-up meeting - 10/00**