Tennessee Valley Authority, Post Office Box 2000, Soddy-Daisy, Tennessee 37379

June 29, 2000

10 CFR 50.50a(g)(5)(iii)

U. S. Nuclear Regulatory Commission
ATTN: Document Control Desk
Washington, D. C. 20555

Gentleman:

In the Matter of	)	Docket Nos. 50-327
Tennessee Valley Authority	)	50-328

SEQUOYAH NUCLEAR PLANT (SQN) - AMERICAN SOCIETY OF MECHANICAL ENGINEERS (ASME) SECTION XI INSERVICE INSPECTION (ISI) RELIEF REQUEST FOR UNITS 1 AND 2 - RESIDUAL HEAT REMOVAL (RHR) SYSTEM HEAT EXCHANGERS

The purpose of this letter is to request NRC review and approval of two new ASME code relief request for SQN's ISI Program. The proposed relief requests (1-ISI-15 and 2-ISI-15) are based on limitations that preclude full code examination of the nozzle inside radius sections for SQN's RHR system heat exchangers. The design configuration of the nozzle-to-shell welds would not provide meaningful results during volumetric examination of the required volume.

The proposed relief request is submitted in accordance with 10 CFR 50.55a(g)(5)(iii). TVA requests that NRC provide approval in accordance with 10 CFR 50.55a(g)(6)(i).

NRC response is requested for the subject relief request by March, 2001. This date will support TVA's schedule for planning ISI's. TVA's submittal is similar to relief from code requirements that was approved for the Ginna Nuclear Power Plant by NRC letter dated August 12, 1997.

Enclosure 1 provides the relief requests and three attachments (Attachment 1, ISI Program Drawings; Attachment 2, Letter from EPRI to TVA; and Attachment 3, Sketch Indicating Scanning Limitations). Enclosure 2 provides a copy of the related ASME code page.

A047

If you have any questions regarding this response, please contact me at extension (423) 843-7071 or J. D. Smith at extension (423) 843-6672.

Sincerely,

Pedro Salas
Licensing and Industry Affairs Manager

Enclosures
cc (Enclosures):

Mr. R. W. Hernan, Project Manager
Nuclear Regulatory Commission
One White Flint, North
11555 Rockville Pike
Rockville, Maryland 20852-2739

NRC Resident Inspector
Sequoyah Nuclear Plant
2600 Igou Ferry Road
Soddy-Daisy, Tennessee 37384-3624

Regional Administrator
U.S. Nuclear Regulatory Commission
Region II
Atlanta Federal Center
61 Forsyth Street, SW, Suite 23T85
Atlanta, Georgia 30303-3415

ENCLOSURE 1

TENNESSEE VALLEY AUTHORITY
SEQUOYAH NUCLEAR PLANT (SQN)
UNITS 1 AND 2
REQUESTS FOR RELIEF 1-ISI-15 AND 2-ISI-15

EXECUTIVE SUMMARY:

This request for relief addresses examinations of the nozzle inside radius sections for the SQN Units 1 and 2 residual heat removal (RHR) heat exchangers (A and B). The design configuration of the nozzle-to-shell weld precludes volumetric examination of the required volume for the nozzle inside radius section. These physical examination limitations are encountered when the examination requirements of the 1989 Edition of American Society of Mechanical Engineers (ASME) Section XI are applied to components designed, constructed, and fabricated to earlier construction code requirements. Based on the issue date of Sequoyah's construction permit (May 27, 1970), Sequoyah is exempt from the code requirements for providing design and examination access provisions as allowed in 10 CFR 50.55a(g)(4).

Performance of a meaningful volumetric examination on the nozzle inside radius sections is not practical given the physical limitations of the subject nozzles and the configuration of the vessel head assembly. This determination is supported by technical analysis of the nozzle inside radius configuration. A surface and best effort ultrasonic examination will be performed as an alternative during SQN's scheduled inservice inspections (ISI's) for nozzle-to-vessel welds. In addition, a pressure test visual examination will be performed. These alternative examinations provide sufficient information to assess the overall integrity of the nozzle. The information and data obtained from these alternative inspections provide an acceptable level of quality and safety.

Therefore, pursuant to 10 CFR 50.55a(g)(5)(iii), TVA requests that NRC approve the proposed relief from ASME code in accordance with 10 CFR 50.55a(g)(6)(i), for SQN's second inspection interval.

UNIT :	1 and 2
SYSTEM:	Residual Heat Removal- System 74
COMPONENTS:	RHR Heat Exchangers (A and B) Nozzles Inside Radius Section

ASME CODE CLASS:	ASME Code Class 2 (Equivalent)
SECTION XI EDITION:	1989 Edition
CODE TABLE:	IWC-2500-1
EXAMINATION CATEGORY:	C-B, Pressure Retaining Nozzle Welds in Vessels
EXAMINATION ITEM NUMBER:	C2.22, Nozzle Inside Radius Section
CODE REQUIREMENT:	ASME Section XI, Table IWC-2500-1, Examination Category C-B, Item Number C2.22, Requires Volumetric Examination
CODE REQUIREMENT FROM WHICH RELIEF IS REQUESTED:	Volumetric Examination Coverage of Essentially 100% of Nozzle Inside Radius Section
LIST OF ITEMS ASSOCIATED WITH THE RELIEF REQUEST:	Units 1 and 2 - RHR Heat Exchangers A and B - Nozzle Inside Radius Sections

BASIS FOR RELIEF:

The design configuration of the RHR heat exchanger nozzle, and the shell and component support configuration prohibits an effective ultrasonic examination of the required volume for nozzle inside radius section.

ALTERNATIVE EXAMINATION:

In lieu of the code required 100 percent ultrasonic examination of the nozzle inside radius section, the surface and best effort ultrasonic examination performed during the scheduled nozzle-to-vessel weld examinations and the scheduled pressure test visual examination will be used to provide sufficient information to assess the overall integrity of the nozzle.

JUSTIFICATION FOR THE GRANTING OF RELIEF:

The design configuration of the subject nozzle-to-shell weld precludes effective volumetric examination of the nozzle inside radius section. In order to examine the nozzle inside radius, the RHR heat exchanger would require extensive design modifications.

An in-depth investigation was initiated by TVA to determine the feasibility of performing an acceptable code volumetric examination. The investigation reviewed the nozzle type, weld placement and actual outside diameter weld profiles as well as ultrasonic measurements to verify inside diameter configuration. To assist in the evaluation of performing an acceptable code volumetric inner radius examination, computer modeling and studies were performed by Electric Power Research Institute (EPRI) personnel to determine if performing an ultrasonic examination of the inner radius region was feasible. The application was determined to be similar to a study performed by EPRI for the Ginna Plant in the application of the regenerative heat exchanger. A copy of the EPRI report for this evaluation is shown in Attachment 2.

EPRI concluded that the RG&E Ginna Plant studies could be applied directly to the TVA RHR heat exchanger inner radius application. The RG&E Ginna Plant study concluded that a feasible examination procedure with optimized inspection angles with either shear or longitudinal wave mode could not be developed which would detect ultrasonic responses from a 30 percent thru-wall notch.

The RG&E Ginna Plant study utilized a full scale mockup with four electro discharge machining notches located in the inner radius region. Computer modeling indicted that several different transducers were required to interrogate the inner radius at the correct angle. Examinations from the shell surface proved to be greatly affected by attenuation and scattering from the nozzle-to-shell weld and material characteristics. Examination from the boss region of the nozzle proved that detection of the 10 percent notches was not achievable. Notches were increased from 10 to 30 percent through-wall and the detection was still not achievable. The experiments conclude that because of the sound beam attenuation, reflections from even a 30 percent through-wall notch do not return to the transducer and provide an adequate detection response.

To achieve the desired sound beam orientation in the nozzle inner radius region, metal paths can get extremely long. Long metal paths combined with the poor signal-to-noise ratios inherent to anisotropic materials make manual detection a difficult challenge. The TVA RHR heat exchanger configuration revealed that metal paths were longer than those experienced in the RG&E Ginna Plant studies; therefore, results are expected to be significantly reduced due to increased attenuation associated with the longer metal paths.

Radiographic examination from the outside surface as an alternative volumetric examination method was determined to be impractical due to the component wall thickness and the configuration of a heat exchanger divider plate inside the component head area affecting radiographic quality. Performing radiographic examination from the inside surface of the heat exchanger would require placing a radiographic source near the center of the head. This would require extensive modifications in order to gain access to the inside for source placement and disassembly of the heat exchanger. A long exposure time would be required because of the thickness and obtaining the required sensitivity would be improbable due to the geometric configuration. Extensive decontamination and personnel protection from contamination would be required. Personnel would be required to work extended hours in a face mask to reduce exposure to internal contamination. Thus, additional radiography and/or ultrasonic examinations from the inner surface of the nozzle to obtain any coverage are impractical.

However, the scheduled surface and ultrasonic examinations performed on the accessible areas (to the maximum extent practical) of the scheduled nozzle-to-shell weld will provide reasonable assurance of the structural integrity for the general area of the nozzle and shell assembly. In addition, the Code required pressure test VT-2 examinations will provide an additional measure of assurance.

Currently there are efforts underway to eliminate examinations of the inner radius areas. Industry studies have documented the lack of a flaw initiation mechanism. ASME Code Case N-619 has progressed successfully through the ASME Section XI code process, and is now under formal review by the NRC. The NRC representatives participating in the ASME code process provided informal approval; however, the

formal NRC approval is still pending. As a result, information on the structural integrity of the nozzle inside radius section area is provided by the examinations that are performed on the nozzle-to-shell welds.

Justification for TVA proposed request for relief is summarized as follows:

- Mechanical limitations (support pads, limited scan area from the boss side at the 0 and 180 degree locations, and close proximity to the vessel-to-flange weld, etc.) cause obtaining the required code coverage impossible.
- A feasible examination procedure with optimized examination angles with either shear or longitudinal wave mode could not be developed to detect notches in a mockup with a flaw 30 percent through-wall depth.
- Industry and code efforts are underway to eliminate inner radius examinations due to a lack of a flaw initiation mechanism.
- Long metal paths needed to access the inner radius region combined with poor signal-to-noise ratios inherent to anisotropic materials, make manual detection a difficult challenge.
- Radiography would require taking the component out of service and significant modification to access the inner diameter for film placement.
- Additional ultrasonic techniques and/or surface methods to examine the inner radius would require access to the inner diameter which would require the component be taken out of service and significant modifications performed to access the inner diameter.
- A surface and ultrasonic examination on the accessible areas of the scheduled nozzle-to-vessel welds will provide sufficient information to judge the overall integrity of the nozzle in conjunction with performing the code required pressure test VT-2 examinations.

Therefore, pursuant to 10 CFR 50.55a(g)(5)(iii), it is requested that relief be granted, in accordance with 10 CFR 50.55a(g)(6)(i).

IMPLEMENTATION SCHEDULE:

This request for relief is applicable to the second inspection interval for SQN Unit 1 and Unit 2.

BACKGROUND INFORMATION:

It should be noted that similar code relief requests (ISI-13 for Unit 1 and ISI-13 for Unit 2) for volumetric examination coverage of SQN's RHR system heat exchanger nozzle inside radius sections were previously approved for SQN's first 10-year inspection interval (see references 1, 2, and 3 below).

REFERENCES:

1. NRC letter to TVA dated February 7,1991, from F. J. Hebdon to O. D. Kingsley, Unit 1
2. NRC letter to TVA dated February 7,1991, from F. J. Hebdon to O. D. Kingsley, Unit 2
3. NRC letter to TVA dated April 19, 1990, from Suzanne Black to O. D. Kingsley, Unit 2
4. NRC letter to Rochester Gas and Electric dated August 12, 1997, from Alexander W. Domerick to Robert C Mecredy (RELIEF REQUEST NO.32)

Attachment 1 - ISI Program Drawing: ISI-0290-C-02 (Unit 1)
ISI Program Drawing: ISI-0289-C-01 (Unit 2)

Attachment 2 - Memorandum to TVA's (Joel Whitaker) from Kim Kitzman (ERPI NDE Center) dated April 10, 2000, "Inner Radius Region Sequoyah Units 1 and 2 Residual Heat Removal (RHR) Heat Exchanger."

Attachment 3 - Sketch Indicating Scanning Limitations on the Residual Heat Removal Heat Exchanger Nozzle to Shell Weld.

ATTACHMENT 1

ISI Program Drawings

REFERENCE DRAWINGS
(1-48N1231)
1 CONTRACT NO. 91934 (N2M-2-25)
AUX. HEAT EXCHANGER MANUAL
DWG NO. 15588

ASME CC-2 (EQUIVALENT)

NOTES:

1. FOR UNIT 2 DWG SEE ISI-0289-C
2. THIS DWG SUPERCEDES CHM-2404-A-01
3. SUPPORT CLASSIFIED AS RHR HEAT EXCHANGER SUPPORT AT THIS LOCATION. SEE DRAWING 1-48N1231 FOR CONFIGURATION. SUPPORT BOUNDARY EXTENDS TO FLOOR. (1)

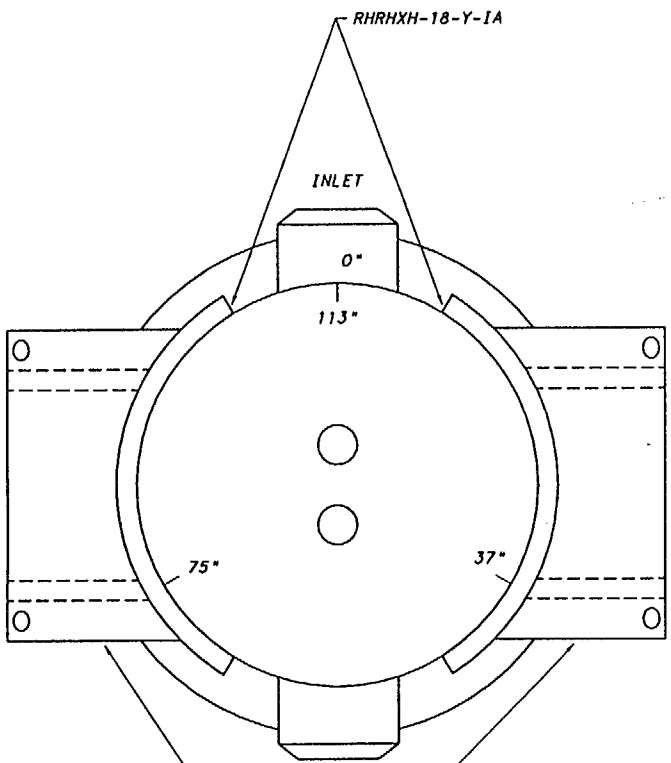

RHRHXH-18-Y (SEE NOTE 3) (1)
SUPPORT BOUNDARY INCLUDES MISCELLANEOUS STEEL FRAME AND EXTENDS TO FLOOR.

RHRHXH OR RHRW-XX-Y

WELD/ID SUPPORT

A OR B HX

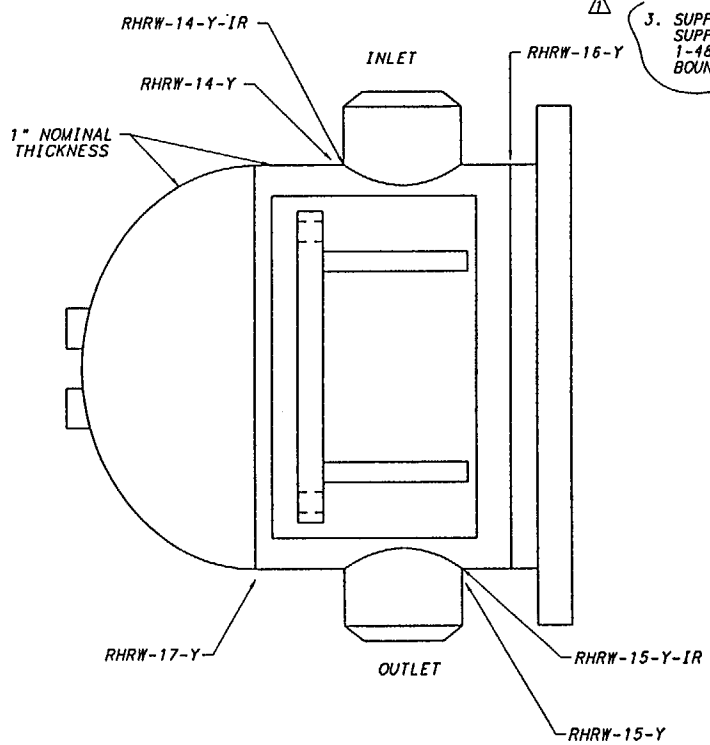

REV	BY	CHECKED	SUBMITTED	APPROVED	DATE
1	RPG				
ADD NOTE 3 & REF DWG PER FCDT 98-07					

TENNESSEE VALLEY AUTHORITY

SEQUOYAH NUCLEAR PLANT
UNIT 1
RESIDUAL HEAT REMOVAL HEAT EXCHANGER
CHANNEL WELDS AND SUPPORT

DRAWN: RPG	DATE: 7-3-96	SCALE: NOT TO SCALE
CHECKED: EDC	APPROVED: GLW	CAD MAINTAINED DRAWING
SUBMITTED: JCG	ISI-0290-C-02	REV 01

REFERENCE DRAWINGS
2-48N1231 △2

ASME CC-2 (EQUIVALENT)

1. FOR UNIT 1 DWG SEE ISI-0290-C
2. SUPPORT CLASSIFIED AS RHR HEAT EXCHANGER SUPPORT AT THIS LOCATION, SEE DRAWING 48N1231 FOR CONFIGURATION. SUPPORT BOUNDARY EXTENDS TO FLOOR △2

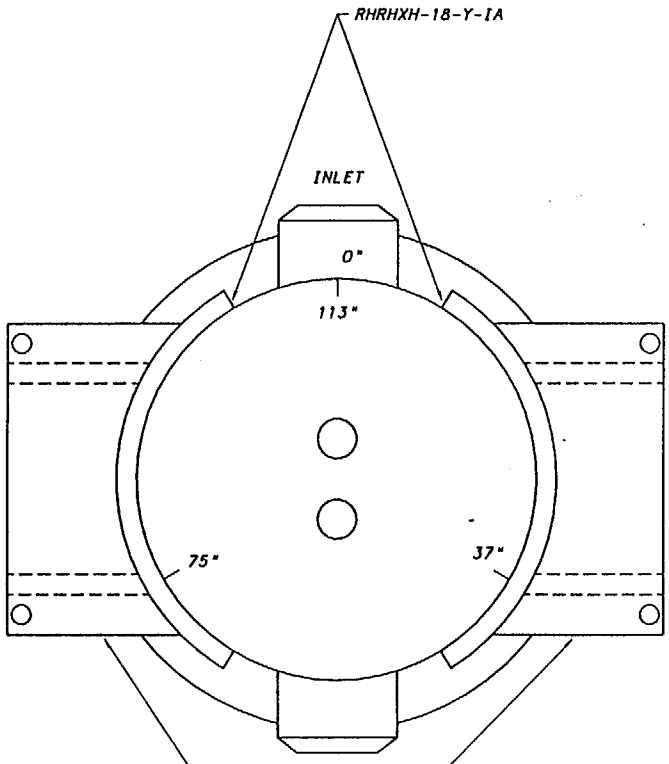

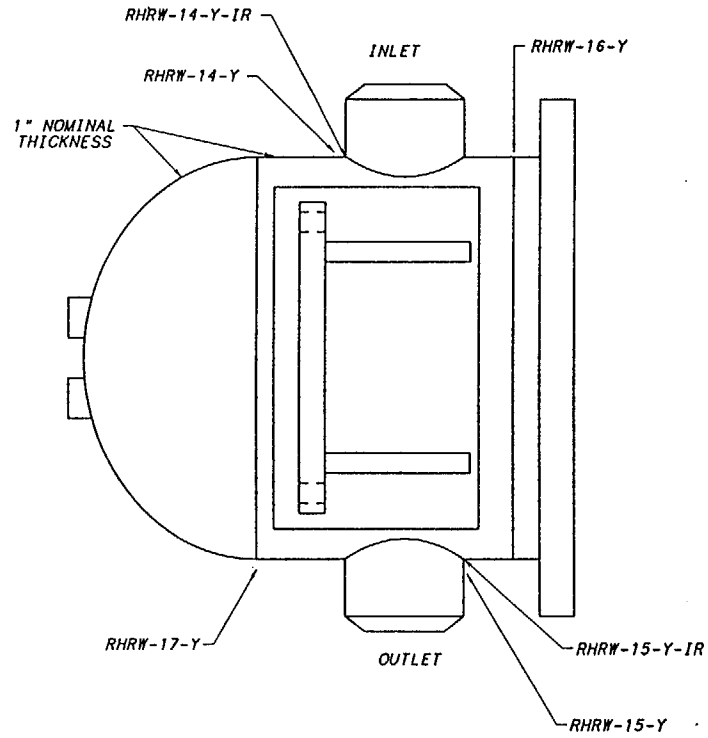

RHRHXH-18-Y (SEE NOTE 2)
SUPPORT BOUNDARY INCLUDES MISCELLANEOUS STEEL FRAME AND EXTENDS TO FLOOR. △2

RHRHXH OR RHRW-XX-Y

WELD/ID SUPPORT

A OR B HX

REV	BY	CHECKED	SUBMITTED	APPROVED	DATE
2	RPG				
ADD REF. DWG, AND ADD NOTE 2 PER FCDT 98-07					
1	RPG	JCG	KRW	GNB	2-5-97
CORRECT UNIT 1 DWG NO. PER FCDT 96-26					

TENNESSEE VALLEY AUTHORITY

SEQUOYAH NUCLEAR PLANT
UNIT 2
RESIDUAL HEAT REMOVAL HEAT EXCHANGER
CHANNEL WELDS AND SUPPORT

DRAWN: RPG	DATE: 2-22-96	SCALE: NOT TO SCALE
CHECKED: JCG	APPROVED: GLW	CAD MAINTAINED DRAWING / REV
SUBMITTED: FRS	ISI-0289-C-01	02

ATTACHMENT 2

EPRI Report
Sequoyah Units 1 and 2
Residual Heat Removal (RHR) Heat Exchanger
Inner Radius Region

L18 000412 007

EPRI

April 10, 2000

Mr. Joel W. Whitaker
Tennessee Valley Authority (TVA)
M/S STC-1I-SQN
PO BOX 2000
Soddy Daisy, TN 37384-2000

SUBJECT: Inner Radius Region Sequoyah Units 1 and 2 Residual Heat Removal (RHR) Heat Exchanger

Dear Joel:

This report is in response to your request to use the NDE Center SRA program to investigate the feasibility of performing ultrasonic inspection on the inner radius region of the Sequoyah residual heat removal (RHR) inlet and outlet nozzles.

As we discussed, your application is very similar to that of the RG&E Ginna Plant, and as a result we were able to apply findings from a study performed for RG&E in 1996. I've gotten approval from Paul Lewis at RG&E to use and include their study findings and report. Paul only asked that he be included in discussions if you decide to pursue further inspection procedure development.

To summarize, the RG&E study showed that manual ultrasonic inspection of the regenerative heat exchanger (RHE) nozzles is not practical because the sound beam is attenuated by material grain structure and weld boundaries resulting in an inadequate signal-to-noise ratio for manual detection. In addition, as we discussed previously, other considerations with respect to this examination are the high dose rates to personnel and the fact that efforts are now underway at the ASME code to eliminate these examinations.

We have compared TVA component drawings and RG&E's drawings. From an inspection standpoint, it appears that the work performed on the RG&E mock-up is directly applicable to your heat exchanger nozzles. However, I would appreciate it if you would review the information enclosed on component materials so that we can discuss it further and make sure that you concur. Keep in mind that we have the option to perform similar experiments on your mock-up if there are any concerns.

Attachment 1 is the report issued to RG&E on their 1996 project. To summarize, we found that even with optimized inspection angles, frequencies etc., we could not develop a feasible inspection procedure with either shear or longitudinal wave modes.

CHARLOTTE OFFICE
1300 W.T. Harris Boulevard | Charlotte | NC | 28262 | USA
P.O. Box 217097 | Charlotte | NC | 28221
Tel 704.547.6100 | Fax 704.547.6168

CORPORATE HEADQUARTERS
3412 Hillview Avenue | P.O. Box 10412 | Palo Alto | CA | 94303-0813 | USA
Tel 650.855.2000 | www.epri.com

To achieve the desired sound beam orientation in the nozzle inner radius region, metal paths can get quite long. Long metal paths combined with the poor signal-to-noise ratios inherent to anisotropic materials, make manual detection very challenging. In your configuration the metal paths are longer than the Ginna mock-up, therefore we would expect the signal-to-noise ratio to be even further degraded.

Attachment 2 shows a drawing of the mock-up constructed for RG&E. Also included is information on the mock-up material specification. Notch locations are indicated on the mock-up drawings. Attachment 3 is the report produced by Kent Gebetsberger summarizing the experiments on the RG&E mock-up. When it was found that the notches could not be detected, RG&E elected to make one of the notches even deeper, from 10% to 30% thru-wall. The deeper notch was still not detectable.

Attachment 4 addresses Doug MacDonald's work on optimization of inspection procedures for the Sequoyah nozzle geometry using 3D computer modeling. You should note that Doug's work compares very well with similar efforts performed by AEA for RG&E in 1992, further substantiating the procedure design philosophy. When reviewing this information, you will note differences in the inspection angle between the TVA and RG&E procedures. Although there are differences in the incident inspection angles, the resulting angle relative to the flaw was designed to be the same. As a result, the RG&E experiments are applicable to the TVA application.

Attachment 4 also provides the resulting coverage determination. As you will see the coverage is around 80%. However, this only means that the sound beam is going out in the correct orientation with respect to the nozzle inner radius. The experiments show that because of the sound beam attenuation, reflections from even a 30% thru-wall notch do not return to the transducer and provide an adequate detection response.

To summarize, given that the materials are the same from an ultrasonic standpoint the only difference between the TVA nozzle geometry and the RG&E mock-up is that the RG&E mock-up is considerably smaller. Since the mock-up is smaller and the metal paths shorter, the notches should be easier to detect. Since they cannot be detected, detection would not be expected in the TVA application. Longer metal path in the TVA application would cause more attenuation of the ultrasonic beam and further degrade the signal-to noise ratio. As a result, use of the RG&E experiment for TVA's application is conservative.

As mentioned earlier, there are efforts underway to eliminate examinations of this kind. Industry studies have documented the lack of a flaw initiation mechanism. ASME Code Case N-619 has progressed successfully through the code process, and is now under formal review by the NRC. NRC representatives participating in the ASME code process gave their approval, however the NRC approval is still pending. We cannot speculate on

NRC acceptance of the code case, but the fact that it has gone this far should factor into your decision on whether or not to perform this examination.

To summarize, the limited coverage combined with the lack of notch detectability would seem to be adequate justification to seek relief from performing this examination. Especially when considering the typically high dose rates and the ASME Code efforts to eliminate this examination.

Please feel free to contact me if you need further information. I should be in all week.

Sincerely,

E. Kim Kietzman

Cc: F. Ammirato
L. Becker
M. Turnbow
J. Goulart
D. MacDonald
B. Rassler

Sequoyah Residual Heat Removal (RHR) Heat Exchanger Inlet and Outlet Nozzles

Douglas E. MacDonald
EPRI NDE Center

Introduction

This report describes the work performed by the EPRI NDE Center to assist TVA in assessing inner radius examination procedures for the Sequoyah residual heat removal (RHR) nozzles (N1 & N2). The necessary geometric inputs to the NDE Center spreadsheet model [1] are listed and a cross sectional plot is provided. The procedure design curve developed by the model is given together with the chosen procedures for the nozzles. Tabular and graphical information on the procedure maximum and minimum probe radial position and metal path are also provided. The combined coverage or minimum misorientation angle achieved by the chosen procedures is also given.

RHR Heat Exchanger Inlet and Outlet Nozzles

Table 1 gives the necessary geometric inputs to the NDE Center spreadsheet model for the Sequoyah RHR heat exchanger nozzles. Figure 1 shows the geometric parameters, which define the RHR heat exchanger nozzles (cross-section at theta=90°). The ASME Section XI Class II examination volume is indicated in Figure 1.

Table 1. Sequoyah RHR Heat Exchanger Nozzles (N1 & N2) Geometry Inputs to Spreadsheet Model

Inside Surface Dimensions	(inches)	Outside Surface Dimensions	(inches)
Rbore	6.562	Rnozzle	9.0625
Rvi	17.5	Rvo	18.5

Figure 2 is a plot of the probe beam angle versus probe skew angle to obtain a 45° corner trap for the Sequoyah RHR heat exchanger nozzles. The procedures used to examine the RHR heat exchanger nozzles are listed in Table 2. The procedure design curve was compared to the procedures used to examine the RHR heat exchanger nozzles (see Figure 2). The convention adopted here for probe skew angles has 0° aligned with the nozzles axis with the beam pointed toward the nozzles; 90°, pointed circumferentially around the nozzles; and 180°, again aligned with the nozzles axis but pointed toward the vessel (see Figure 3).

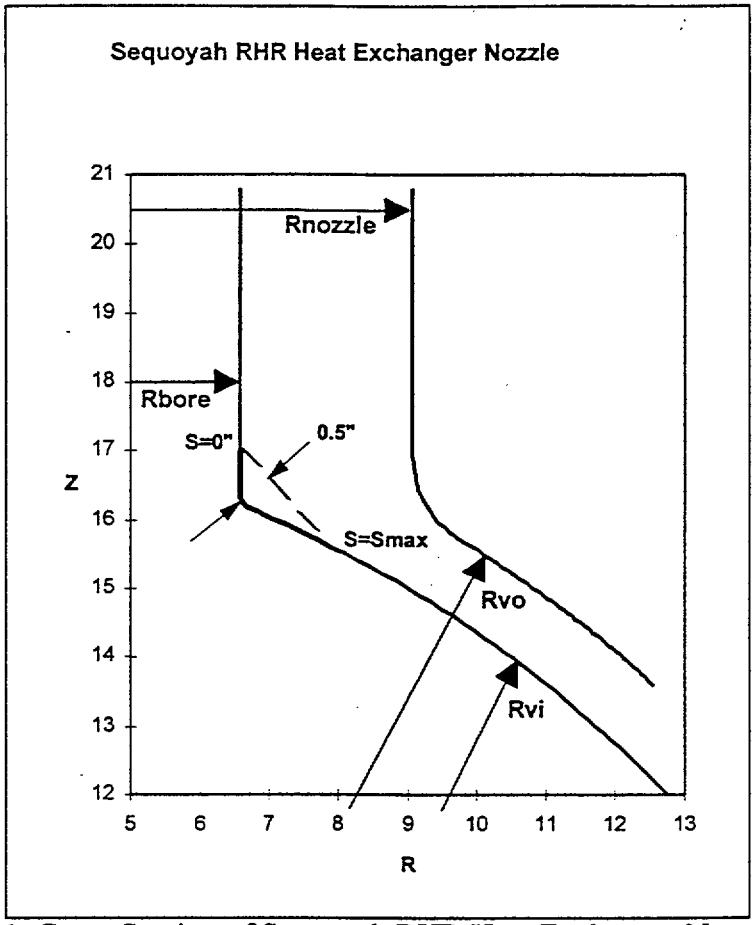

Figure 1. Cross-Section of Sequoyah RHR Heat Exchanger Nozzle (N1 & N2) Defining Class II Examination Volume.

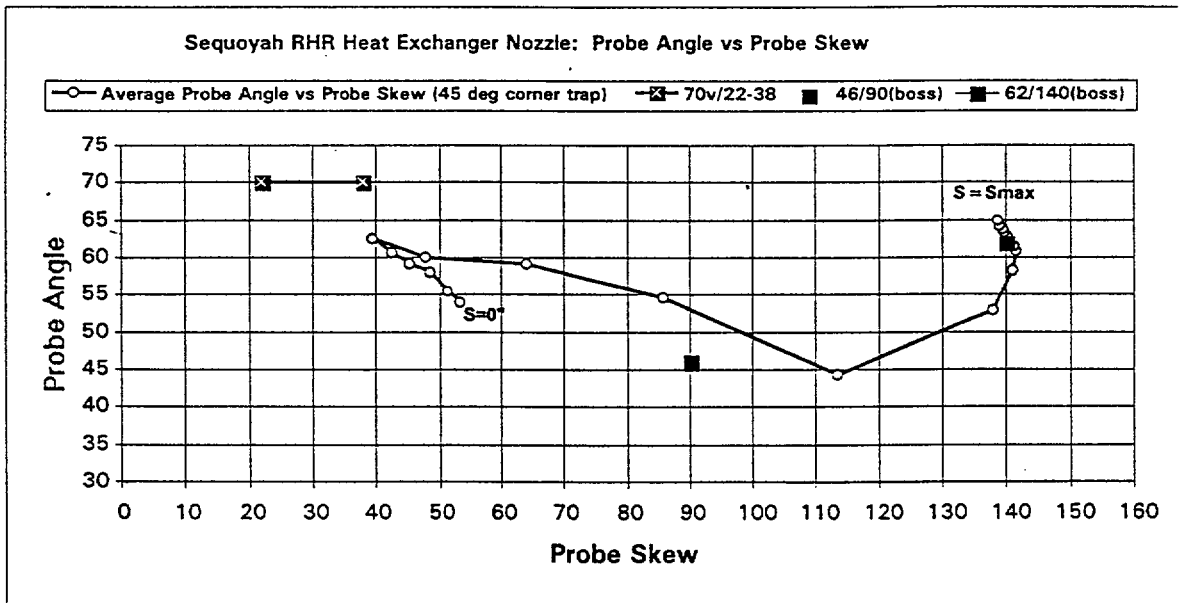

Figure 2. Sequoyah RHR Heat Exchanger Nozzle: Procedure Design Curve - Probe Angle vs. Probe Skew for 45° Corner Trap.

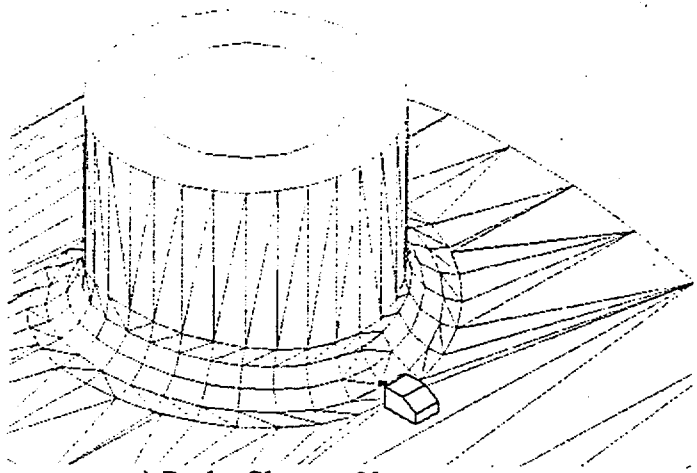

a) Probe Skew = 0°

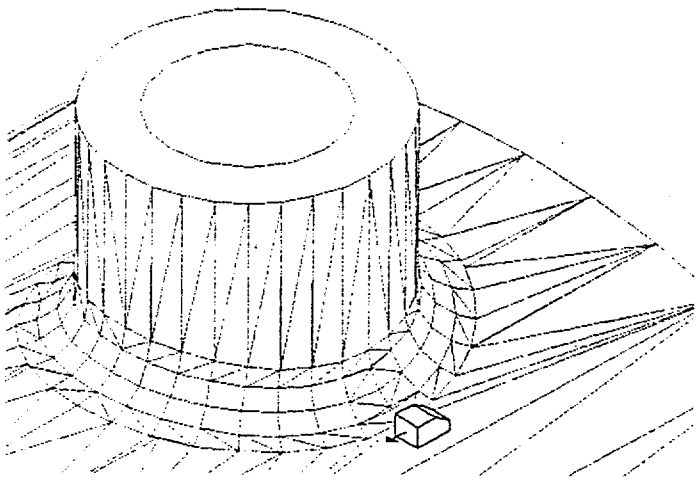

b) Probe Skew = +90°

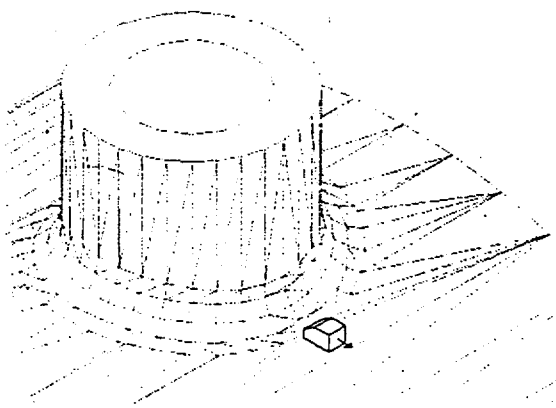

c) Probe Skew = 180°

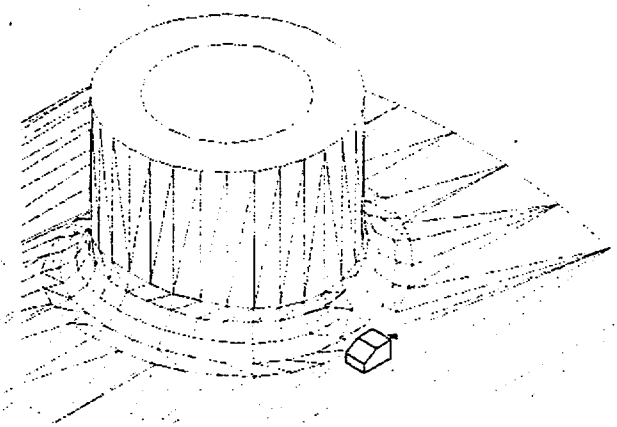

d) Probe Skew = -90°

Figure 3. Definition of Probe Skew Angle.

Table 2. NDE Center Procedures for Sequoyah RHR Heat Exchanger Nozzle.

Probe Angle	Probe Skew	Scan Surface	Mode of Propagation
46	90	Outer Nozzle Boss	Shear Wave
62	140	Outer Nozzle Boss	Shear Wave
70	22-38	Outer Vessel	Shear Wave

The examination procedures are summarized in Table 3 as well as, the corresponding scan surfaces, the minimum and maximum probe axial, Z, or radial, R, positions, the minimum and maximum metal paths, and the maximum misorientation angle.

Table 3. Spreadsheet Model Procedures for Sequoyah RHR Heat Exchanger Nozzle.

Probe Angle	Probe Skew	Scan Surface	Min Z/R	Max Z/R	Min MP	Max MP	Max Misorientation Angle
46	90	Boss	16.93	18.49	4.42	8.48	19.11
62	140	Boss	17.31	20.8	2.68	6.27	21.45
70	22-38	Vessel	9.83	12.50	3.67	10.72	23.17

Figure 5 shows the minimum and maximum probe axial position, Z, and the portion of the examination volume covered by the boss procedures 46/90 and 62/140.

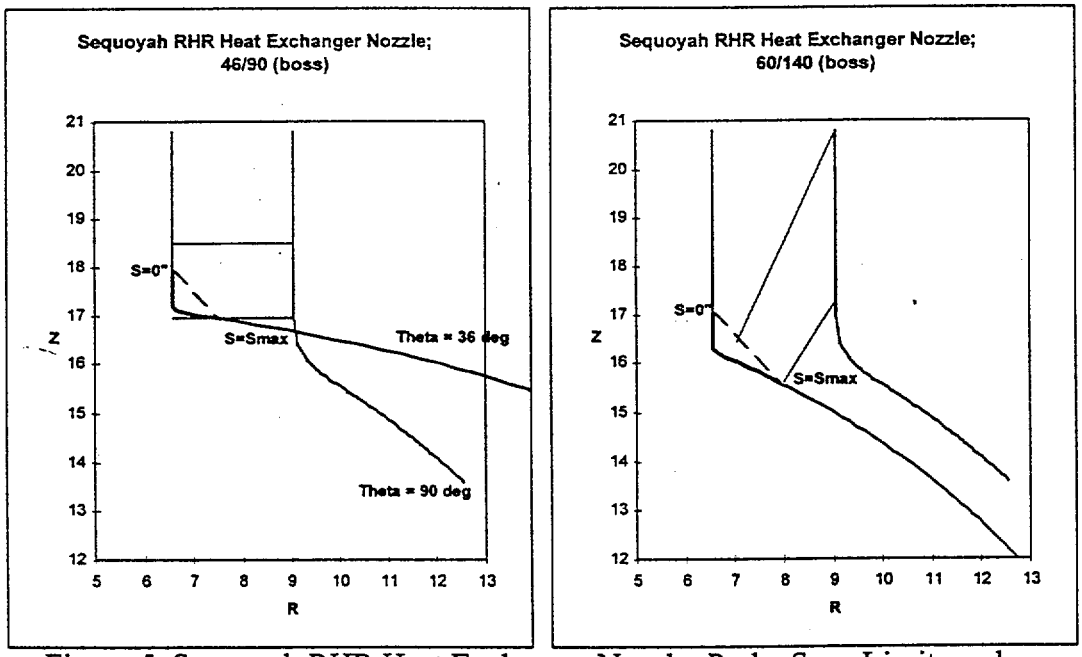

Figure 5. Sequoyah RHR Heat Exchanger Nozzle: Probe Scan Limits and Examination Coverage for Boss Procedures 46/90 and 62/140.

Figure 6 shows the minimum and maximum probe radial positions, R, and the associated portion of the examination volume covered by the vessel procedure 70/22-38.

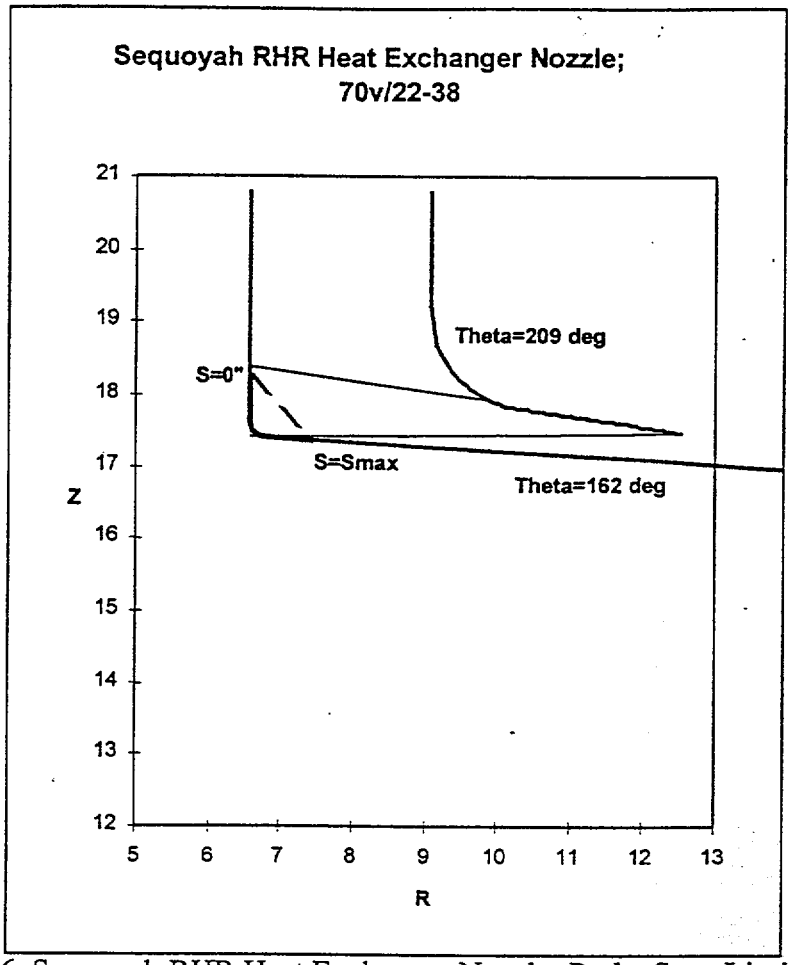

Figure 6. Sequoyah RHR Heat Exchanger Nozzle: Probe Scan Limits and Examination Coverage for Vessel Procedure 70/22-38.

The restriction on the position of the 70° probe due to the heat exchanger support pads has been taken into consideration during the coverage calculations. Figure 4 shows the combined coverage (i.e. misorientation angle) achieved by the procedures listed in Table 2, 46/90 and 62/140 from the nozzle boss and 70/22-38 from the vessel. The magnitude of the misorientation angle is plotted using a spectral color scale, see Figure 4. The white areas in the plot indicate portions of the examination volume not covered.

In viewing Figures 4 through 6, each of these probe/skew angle combinations is effective within some subset of the examination volume and ineffective in other areas. Boss procedure 46/90 is effective for flaws on the bore near theta = 36°. Boss procedure 62/140 is effective for flaws on the vessel. Vessel procedure 70/22-38 is effective for flaws on the bore near theta = 162°. Because of the limited scan area for the 70° probe, the maximum percent coverage achieved by the procedures listed in Table 2 is about 82% (see Figure 4).

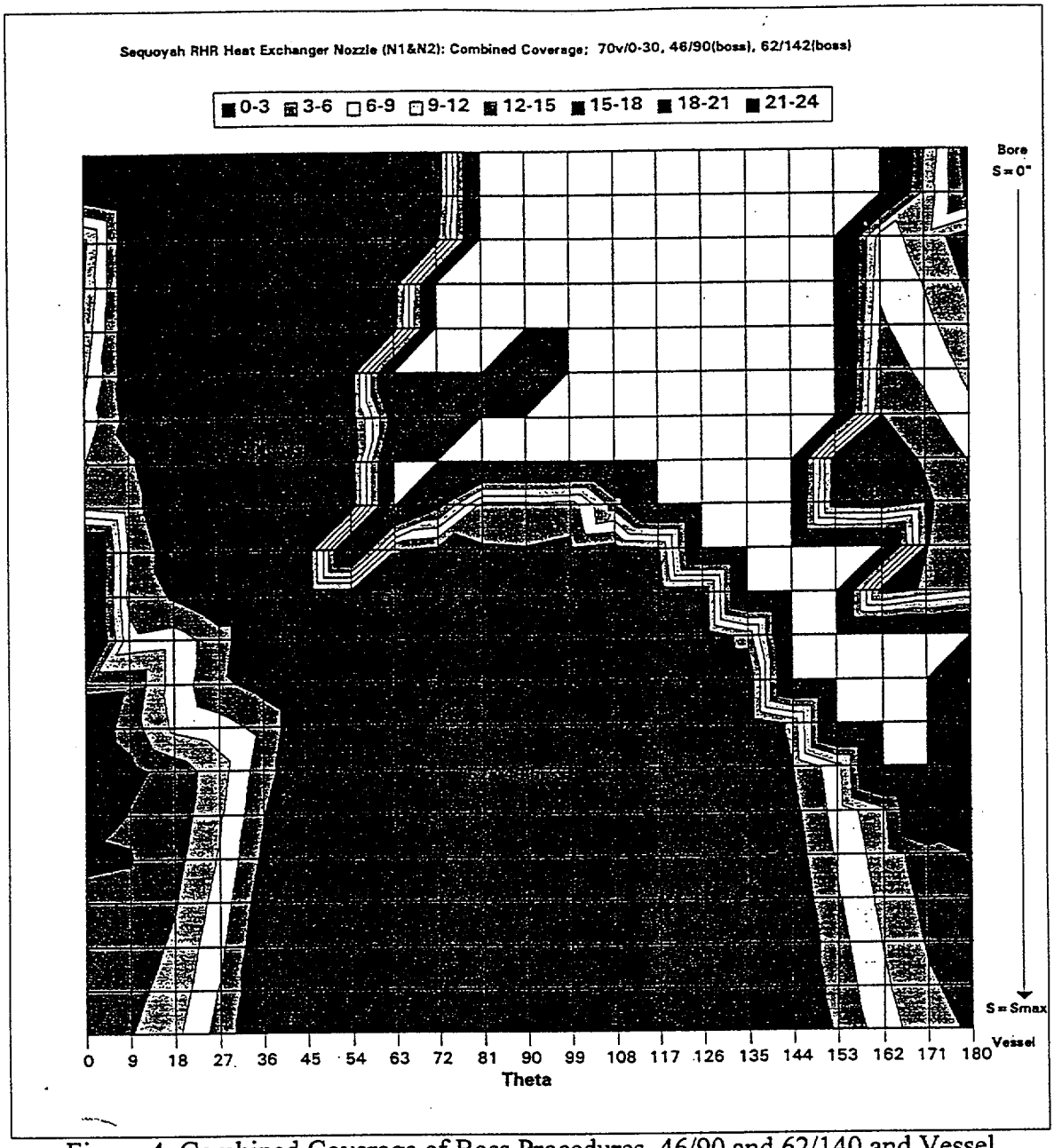

Figure 4. Combined Coverage of Boss Procedures, 46/90 and 62/140 and Vessel Procedure, 70/22-38 for Sequoyah RHR Heat Exchanger Nozzle (N1 & N2).

References

1. *Ultrasonic Examination of Nozzle Inner Radius Regions.* Charlotte, North Carolina: EPRI NDE Center, December 1997. TR-107493.

ATTACHMENT 3

Sketch Indicating Scanning
Limitations on the
Residual Heat Removal Heat Exchanger
Nozzle-to-Shell Weld

Sequoyah Nuclear Plant Units 1 and 2

Typical Sketch for the Residual Heat Removal Heat Exchanger Nozzle to Shell Weld

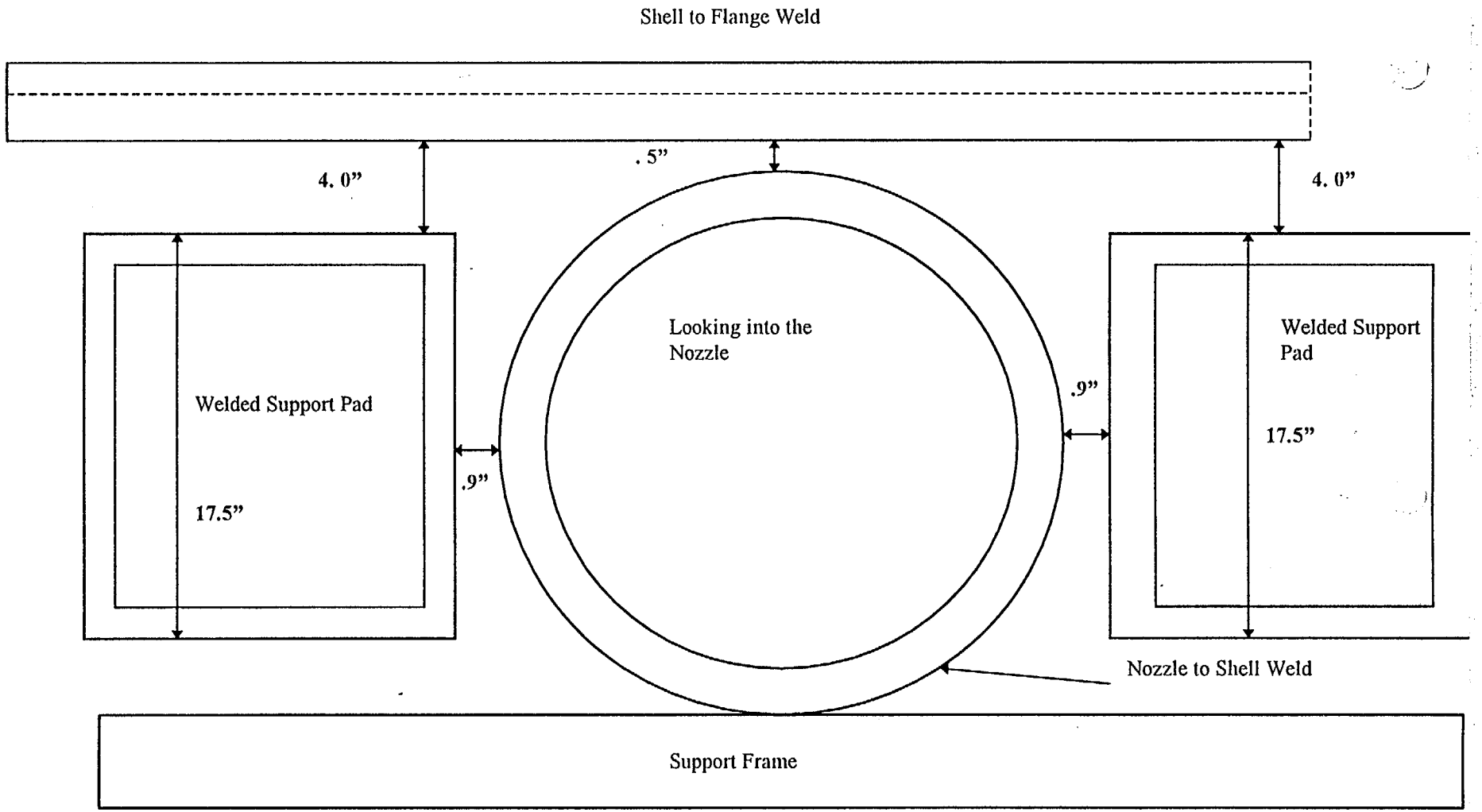

ENCLOSURE 2

TENNESSEE VALLEY AUTHORITY
SEQUOYAH NUCLEAR PLANT (SQN)
UNITS 1 AND 2
APPLICABLE ASME CODE PAGE

TABLE IWC-2500-1 (CONT'D)
EXAMINATION CATEGORIES

EXAMINATION CATEGORY C-B, PRESSURE RETAINING NOZZLE WELDS IN VESSELS						
Item No.	Parts Examined	Examination Requirements/ Fig. No.	Examination Method	Acceptance Standard	Extent of Examination[4]	Frequency of Examination[3]
C2.10	Nozzles in Vessels ≤ ½ in. Nominal Thickness					
C2.11	Nozzle-to-Shell (or Head) Weld	IWC-2500-3	Surface	IWC-3511	All nozzles at terminal ends[1] of piping runs[2]	Each inspection interval
C2.20	Nozzles Without Reinforcing Plate in Vessels > ½ in. Nominal Thickness					
C2.21	Nozzle-to-Shell (or Head) Weld	IWC-2500-4(a) or (b)	Surface and volumetric	IWC-3511	All nozzles at terminal ends[1] of piping runs[2]	Each inspection interval
C2.22	Nozzle Inside Radius Section	IWC-2500-4(a) or (b)	Volumetric	IWC-3511	All nozzles at terminal ends[1] of piping runs[2]	Each inspection interval
C2.30	Nozzles With Reinforcing Plate in Vessels > ½ in. Nominal Thickness					
C2.31	Reinforcing Plate Welds to Nozzle and Vessel	IWC-2500-4(c)	Surface	IWC-3511	All nozzles at terminal ends[1] of piping runs[2]	Each inspection interval
C2.32	Nozzle-to-Shell (or Head) Welds When Inside of Vessel Is Accessible	IWC-2500-4(c)	Volumetric	IWC-3511	All nozzles at terminal ends[1] of piping runs[2]	Each inspection interval
C2.33	Nozzle-to-Shell (or Head) Welds When Inside of Vessel Is Inaccessible	Note (5)	Visual, VT-2	No leakage	All nozzles at terminal ends[1] of piping runs[2]	Each inspection period

NOTES:
(1) Includes nozzles welded to or integrally cast in vessels that connect to piping runs (manways and handholes are excluded).
(2) Includes only those piping runs selected for examination under Examination Category C-F.
(3) The nozzles selected initially for examination shall be reexamined over the service lifetime of the component.
(4) In the case of multiple vessels of similar design, size, and service (such as steam generators, heat exchangers), the required examinations may be limited to one vessel or distributed among the vessels.
(5) The telltale hole in reinforcing plate shall be examined for evidence of leakage while vessel is undergoing the system pressure test (IWC-5221 or IWC-5222) as required by Examination Category C-H.