June 27, 2000

Mr. M. Wadley
President, Nuclear Generation
Northern States Power Company
414 Nicollet Mall
Minneapolis, MN 55401

SUBJECT: PRAIRIE ISLAND - NRC EXAMINATION REPORT 50-282/2000301(DRS); 50-306/2000301(DRS)

Dear Mr. Wadley:

On May 19, 2000, the NRC completed initial operator licensing examinations at your Prairie Island Units 1 and 2 reactor facilities. The enclosed report presents the results of the examination.

Your training department personnel administered the written examination on May 15, 2000. NRC examiners administered the operating examination during the same week. Four of your licensed reactor operators were administered senior reactor operator examinations. The license applicants' performance evaluations were finalized on June 20, 2000. Two applicants passed all sections of their examinations; however, they will not be issued senior reactor operator licenses until possible appeals are resolved. One applicant demonstrated unsatisfactory performance on the written examination and one applicant on the administrative portion of the operating examination. These individuals were not issued senior reactor operator licenses. Two of four applicants failing the examination was an abnormally high failure rate. Your staff would be expected to evaluate these failures to determine whether deficiencies exist in your initial licensed operator training program.

In accordance with 10 CFR 2.790 of the NRC's "Rules of Practice," a copy of this letter and its enclosure will be available electronically for public inspection in the NRC Public Document Room or from the Publicly Available Records (PARS) component of NRC's document system (ADAMS). ADAMS is accessible from the NRC Web site at http://www.nrc.gov/NRC/ADAMS/index.html (the Public Electronic Reading Room).

TASK TITLE: Damaged Fuel During Fuel Handling In Containment

JPM NUMBER: 00-SRO-A.1

RELATED PRA INFORMATION (SEE PITC 2.3): None

TASK NUMBER: CRO 034.ATI.11

K/A NUMBERS: 2.1.20

APPLICABLE METHOD OF TESTING:

Simulate Performance: ☒ Actual Performance: ☐

Evaluation Location: Turbine Building: ☐ Auxiliary Building: ☐

Simulator: ☐ Control Room: ☒

Other: ☐

Time for Completion: 10 Minutes

TASK APPLICABILITY: (Check all that apply) SRO: ☒ RO: ☒ NLO: ☐

PREPARED BY: Mark Jones **DATE:** 3/20/00

REVIEWED BY: _____ **DATE:** _____

APPROVED BY: _____ **DATE:** _____

Operator: _____ **(SRO / RO / NLO)**

Evaluator: _____

Date: _____

READ TO THE OPERATOR

I will explain the initial conditions, which step(s) to simulate or discuss, and provide initiating cues. When you complete the task successfully, the objective for this job performance measure will be satisfied.

INITIAL CONDITIONS:

- Unit 2 is shutdown and in the Refueling Mode.
- Fuel handling is in progress in the Unit 2 containment and the spent fuel pool.
- Containment Fan Coil Units 22 and 24 are OOS for maintenance.
- Containment Fan Coil Units 21 and 23 are secured, but maintained operable per SS secure cards.
- The SRO in charge of fuel handling informs the Control Room that an assembly has been dropped in the core and that bubbles are rising to the surface.
- All fuel handling activities in the containment and the spent fuel pool have been suspended.
- You are the Unit 2 Shift Supervisor and at present, alone in the Unit 2 Control Room.

INITIATING CUES:

- Respond to the dropped fuel assembly.
- **THIS JPM IS TIME CRITICAL.**

JPM PERFORMANCE INFORMATION

Required Materials: Completed C19.9 checklist indicating both maintenance and personnel airlocks open.

General References: D5.2 AOP1, C1.6 AOP1

Task Standards: Containment evacuated and boundary isolation completed.

Start Time: _____

NOTE: When providing "Evaluator Cues" to the examinee, care must be exercised to avoid prompting the examinee. Typically cues are only provided when the examinee's actions warrant receiving the information (i.e. the examinee looks or asks for the indication).

NOTE: Critical steps are marked with an "X" below the performance step number. Failure to meet the standard for any critical step shall result in failure of this JPM.

Performance Step: **Critical X (S-1)**	Initiate CONTAINMENT EVACUATION by actuating the Containment evacuation alarm.
Standard:	Containment evacuation alarm actuated within 1 minute of report of damaged fuel, by using the CONTAINMENT EVACUATION ALARM - UNIT 2 pushbutton.
Evaluator Note:	**Immediate actions of both D5.2 AOP1 and C1.6 AOP1 require initiation of containment evacuation. C1.6 AOP1 is the actual procedure for initiating the evacuation.**
Evaluator Cue:	**When examinee indicates that he/she would actuate the containment evacuation alarm, inform examinee that, "the evacuation alarm is actuated."**
Performance:	**SATISFACTORY** _____ **UNSATISFACTORY** _____
Comments:	_____

Performance Step: Announce conditions over the plant paging system:
Critical X **(S-2)**

ATTENTION ALL PLANT PERSONNEL.
CONDITIONS IN THE UNIT 2 CONTAINMENT REQUIRE IMMEDIATE CONTAINMENT EVACUATION.
ALL PERSONNEL INSIDE THE UNIT 2 CONTAINMENT AND ANNULUS EVACUATE IMMEDIATELY THROUGH THE NEAREST AIRLOCK.
ALL PERSONNEL IN THE SPENT FUEL POOL AREA IMMEDIATELY REPORT TO THE DRESS OUT AREA.

Repeat the announcement.

Standard: Announcement made and repeated.

Evaluator Note: **At this point, the examinee may perform D5.2 AOP1 and C1.6 AOP1 actions in parallel. D5.2 actions evaluation criteria are given later in this JPM.**

Evaluator Cue: **When examinee indicates that he/she would make and repeat announcement, inform examinee that, "announcement has been made and repeated."**

Performance: **SATISFACTORY** _____ **UNSATISFACTORY** _____

Comments: _____

Performance Step: Notify the Central Alarm Station (CAS) Security officer that Containment evacuation is required and the Containment access card reader be put into the accountability mode.
Critical _____

Standard: Security notified and the containment access card reader placed into the accountability mode.

Evaluator Cue: **When notified, acknowledge report and direction, then report that, "the containment access card reader is in the accountability mode."**

Performance: **SATISFACTORY** _____ **UNSATISFACTORY** _____

Comments: _____

Performance Step: **Critical** _____	Notify the Lead Access Radiation Protection Specialist (RPS) of the situation and conditions inside Containment.
Standard:	RPS notified.
Evaluator Cue:	**When notified, acknowledge report, then report that, "the containment walkthrough has been completed, no annulus work was being performed, and an investigation of the damaged fuel assembly will be conducted when containment access is restored."**
Performance:	**SATISFACTORY** _____ **UNSATISFACTORY** _____
Comments:	_____

Performance Step: **Critical** _____	Notify Nuclear Engineering Department.
Standard:	Nuclear Engineering notified.
Evaluator Cue:	**When notified, acknowledge report, then report that, "Nuclear Engineering will assist HP with investigation of the damaged fuel assembly when containment access is restored."**
Performance:	**SATISFACTORY** _____ **UNSATISFACTORY** _____
Comments:	_____

Performance Step: **Critical** _____	Notify CAS Security officer to print out accountability report on the Secondary Alarm Station (SAS) printer and then obtain the report.
Standard:	Accountability report requested and determination made that accountability completed with all persons accounted for.
Evaluator Cue:	**When notified, acknowledge request, then report that, "all persons are accounted for."**
Performance:	**SATISFACTORY** _____ **UNSATISFACTORY** _____
Comments:	_____

Performance Step: **Critical** **X** **(S-3)**	Initiate manual Containment isolation using control board switches.
Standard:	Containment isolation actuated for Unit 2, by using either CS-49665 (MCI-1) or CS-46514 (MCI-2).
Evaluator Cue:	**When examinee indicates that he/she would actuate containment isolation on Unit 2, inform examinee that, "containment isolation is actuated on Unit 2."**
Performance:	**SATISFACTORY** _____ **UNSATISFACTORY** _____
Comments:	_____

Performance Step: **Critical X (S-4)**	Complete Containment isolation through C19.9, CONTAINMENT BOUNDARY CONTROL DURING COLD SHUTDOWN AND REFUELING SHUTDOWN, Table 2.
Standard:	Airlock operator directed to shut one airlock door in each airlock.
Evaluator Note:	**The completed C19.9 checklist provided to examinee at beginning of JPM, will indicate both maintenance and personnel airlocks open.**
Evaluator Cue:	**When requested, acknowledge request, then report that, "one airlock door will be shut in each airlock as soon as possible."**
Performance:	**SATISFACTORY** _____ **UNSATISFACTORY** _____
Comments:	_____

Performance Step: **Critical X (S-5)**	Place operable FCUs in "FAST" speed.
Standard:	21 and 23 CFCUs started in FAST speed, by using CS-46549 and CS-46550 respectively; red FAST lights on, red SLOW lights off, green lights off.
Evaluator Cue:	**When examinee indicates that he/she would start 21 and 23 CFCUs in fast speed, inform examinee that, "21 and 23 CFCUs are in fast speed."**
Performance:	**SATISFACTORY** _____ **UNSATISFACTORY** _____
Comments:	_____

Terminating Cues: **When 21 and 23 CFCUs have been started in fast speed, then inform examinee that, "this JPM is complete."**

Stop Time: _____

TURNOVER SHEET

INITIAL CONDITIONS:

- Unit 2 is shutdown and in the Refueling Mode.
- Fuel handling is in progress in the Unit 2 containment and the spent fuel pool.
- Containment Fan Coil Units 22 and 24 are OOS for maintenance.
- Containment Fan Coil Units 21 and 23 are secured, but maintained operable per SS secure cards.
- The SRO in charge of fuel handling informs the Control Room that an assembly has been dropped in the core and that bubbles are rising to the surface.
- All fuel handling activities in the containment and the spent fuel pool have been suspended.
- You are the Unit 2 Shift Supervisor and at present, alone in the Unit 2 Control Room.

INITIATING CUES:

- Respond to the dropped fuel assembly.
- **THIS JPM IS TIME CRITICAL.**

PITCQ-089	JOB PERFORMANCE MEASURE WORKSHEET	Rev. 5 - 10/98

TASK TITLE: Review I&R Forms For Closeout

JPM NUMBER: 00-SRO-A.2

RELATED PRA INFORMATION (SEE PITC 2.3): None

TASK NUMBER: SS 342.ATI.28

K/A NUMBERS: 2.2.13

APPLICABLE METHOD OF TESTING:

Simulate Performance: ☐ Actual Performance: ☒

Evaluation Location: Turbine Building: ☐ Auxiliary Building: ☐

Simulator: ☐ Control Room: ☐

Other: Anywhere ☒

Time for Completion: 15 Minutes

TASK APPLICABILITY: (Check all that apply) SRO: ☒ RO: ☐ NLO: ☐

PREPARED BY: Mark Jones **DATE:** 3/21/00

REVIEWED BY: _____ **DATE:** 3/28/00

APPROVED BY: _____ **DATE:** _____

Operator: _____ **(SRO / RO / NLO)**

Evaluator: _____

Date: _____

READ TO THE OPERATOR

I will explain the initial conditions, which step(s) to simulate or discuss, and provide initiating cues. When you complete the task successfully, the objective for this job performance measure will be satisfied.

INITIAL CONDITIONS:

- Work on the packages associated with Isolation and Restoration (I&R) numbers 99-13311 and 00-01214 has been completed and the tags removed.

INITIATING CUES:

- As the Work Control Center SS, review both I&R forms for closeout.

JPM PERFORMANCE INFORMATION

Required Materials: I&R Forms 99-13311 dated 5-MAR-2000 and 00-01214 dated 8-MAR-2000.

General References: 5AWI 3.2.4 step 6.6.1

Task Standards: I&R 99-13311 reviewed and approved, I&R 00-01214 returned to control room for verification of AF-13-5, AF-21-3, and 2AF-18-13 restoration.

Start Time: _____

NOTE: When providing "Evaluator Cues" to the examinee, care must be exercised to avoid prompting the examinee. Typically cues are only provided when the examinee's actions warrant receiving the information (i.e. the examinee looks or asks for the indication).

NOTE: Critical steps are marked with an "X" below the performance step number. Failure to meet the standard for any critical step shall result in failure of this JPM.

Performance Step: **Critical __X__ (S-1)**	The Shift Supervisor SHALL perform a final review of the restoration of the equipment and/or system. This review SHALL be documented (name, time, date) on the I&R.
Standard:	I&R 99-13311 reviewed with no discrepancies identified. SS signature, time, and date filled in.
Performance:	**SATISFACTORY** _____ **UNSATISFACTORY** _____
Comments:	_____

Performance Step: **Critical __X__ (S-1)**	The Shift Supervisor SHALL perform a final review of the restoration of the equipment and/or system. This review SHALL be documented (name, time, date) on the I&R.
Standard:	I&R 00-01214 reviewed with the following discrepancies identified: • Tag #8: AF-13-5 does not have returned normal (Yes/No) circled to indicate restoration position. • Tag #13: AF-21-3 is indicated as not being returned to normal. This is a drain valve, which should be in its normal position for returning to service. • Tag #14: 2AF-18-13 is indicated as not being returned to normal. This is a drain valve, which should be in its normal position for returning to service. SS signature, time, and date NOT filled in and I&R 00-01214 returned to the control room for verification of restoration positions of valves identified above.
Evaluator Note:	**It is only critical that the examinee identify one of the discrepancies.**
Evaluator Cue:	**If examinee determines that discrepancies exist and that the I&R must be returned to the control room, inform examinee that, "the I&R will be returned to the control room."**
Performance:	**SATISFACTORY _____ UNSATISFACTORY _____**
Comments:	_____

Terminating Cues: **When examinee completes reviews of both I&Rs and has either signed them or identified discrepancies, inform examinee that, "this JPM is complete."**

Stop Time: _____

TURNOVER SHEET

INITIAL CONDITIONS:

- Work on the packages associated with Isolation and Restoration (I&R) numbers 99-13311 and 00-01214 has been completed and the tags removed.

INITIATING CUES:

- As the Work Control Center SS, review both I&R forms for closeout.

PINGP 638 Re
Isolation: 00-0[illegible]4 Ver: 1

Isolation and Restoration

Oid: 1241596

Title: 21 AFWP OUTBOARD PUMP PACKING SHOT
Assoc. Work Doc:
Isolated For: M.S. P FLYNN

Prepared by: HAWKENSON, JEFFERY L (03/08/00 02:12)
Approved by: WEIGENANT, MARK K (03/08/00 02:21)

Reviewed by: WEIGENANT, MARK K (03/08/00 02:21)
Activated by: WEIGENANT, MARK K (03/08/00 02:21)

Isolation

Instructions:

Pre-Job Briefing Complete _____ Date: 3/8/00

[ ] CV Air Supply Tag(s)
[ ] Fire Protection Vlv Position Tag(s)
[ ] Fuse Plugs Installed

Isolation Completed & Computer Updated By: _____ Date: 3/8/00

Notes:

MASTER

Restoration

Instructions:

[ ] Partial Restoration Attachment (PING 1072)
[ ] Temporary Restoration Attachment (PING 7471)
[ ] Isolation Cross Reference

Cross-Ref WO's Released: _____ Date: _____

Isolation Released By: _____ (M.S. P FLYNN) Date: 3/8/00

SS Permission to Restore: _____ Date: 3/8/00

Pre-Job Briefing Complete _____ Date: 3-8-00

[ ] CV Air Supply Tag(s)
[ ] Fire Protection Vlv Position Tag(s)
[ ] Fuse Plugs Returned to Control Room

Restoration Completed & Computer Updated By: _____ Date: 3-8-00

Review: _____ (SS) Time: _____ Date: _____

Notes:

Tag No.	Tag Type	Equipment Id & Name	Normal Position	Isolated Position	IV	Hung by / Verified by	Removed by / Verified By	Returned Normal
1	INFO	CS-46770 46770 21 MD AFW PMP START/STOP CS Bldg: Turbine Building/Old Admin, Floor: ELEVATION 735, Room: , Remarks: CONTROL PANEL E-2 On For: M.S. P FLYNN	AUTO	PULL OUT	N	Date 3/8/00 Time 0273	Date 3-8-00 Time 2230	Yes No

MASTER

Tag No.	Tag Type	Equipment Id & Name	Normal Position	Isolated Position	IV	Hung by / Verified by	Removed by / Verified By	Returned Normal
2	INFO	CS-46785 46785 21 MD AFW PMP SHTDN AUTO/MAN/AUTO SEL SW Bldg: Turbine Building/Old Admin, Floor: ELEVATION 735, Room: , Remarks: CONTROL PANEL E-2 On For: M.S. P FLYNN	AUTO	MANUAL	Y	Date 3/8/00 Time 0233 Date 3-8-00 Time 0250	Date 3/8/00 Time 2140 Date 3/8/00 Time 2210	Yes / No
3	INFO	CS-46767 46767 21 MD AFW PMP SUCT CL SPLY MV-32026 OP/CL CS Bldg: , Floor: , Room: , Remarks: CONTROL PANEL E-2 On For: M.S. P FLYNN	CLOSED	NEUTRAL/CLOSED	N	Date 3/8/00 Time 0233	Date 3/8/00 Time 2150	Yes / No
4	INFO	CS-46766 46766 21 MD AFW PMP SUCT FROM CST MV-32336 OP/CL CS Bldg: , Floor: , Room: , Remarks: CONTROL PANEL E-2 On For: M.S. P FLYNN	OPEN	NEUTRAL/CLOSED	N	Date 3/8/00 Time 0233	Date 3/8/00 Time 2150	Yes / No
5	INFO	CS-46840 46840 21 AFW TO 21 SG MV-32383 OP/CL CS Bldg: , Floor: , Room: , Remarks: CONTROL PANEL E-2 On For: M.S. P FLYNN	NEUTRAL/OPEN	NEUTRAL/CLOSED	N	Date 3/8/00 Time 0233	Date 3/8/00 Time 2148	Yes / No
6	INFO	CS-46841 46841 21 AFW TO 22 SG MV-32384 OP/CL CS Bldg: , Floor: , Room: , Remarks: CONTROL PANEL E-2 On For: M.S. P FLYNN	NEUTRAL/OPEN	NEUTRAL/CLOSED	N	Date 3/8/00 Time 0233	Date 3/8/00 Time 2148	Yes / No
7	HOLD	BKR 25-10 21 MD AFW PMP Bldg: D5/D6 Building, Floor: ELEVATION 718, Room: , Remarks: G.8/16.0 25 BUS ROOM On For: M.S. P FLYNN	CONNECT	DISCONNECT	Y	Date 9 Mar 00 Time 0246 Date 3-8-00 Time 0249	Date 3/8/00 Time 2210 Date 3/8/00 Time 2210	Yes / No
8	HOLD	AF-13-5 21 MD AFW PMP DISCH Bldg: Turbine Building/Old Admin, Floor: , Room: , Remarks: On For: M.S. P FLYNN SFGD:2-003 LOCK:E-339 KEY:153	OPEN	CLOSED	Y	Date 9 Mar 00 Time 0253 Date 3-8-00 Time 0255	Date 3/8/00 Time 2205 Date 3/8/00 Time 2220	Yes / No

MASTER

MASTER

Tag No.	Tag Type	Equipment Id & Name	Normal Position	Isolated Position	IV	Hung by / Verified by	Removed by / Verified By	Returned Normal
9	HOLD	BKR 211E-3 MCC 2A1-B2 21 MD AFW PMP SUCT FROM CST MV-32336 Bldg: Turbine Building/Old Admin, Floor: ELEVATION 695, Room: , Remarks: E.5/9.5 12/22 AFW PUMP ROOM On For: M.S. P FLYNN	ON	OFF	N	Date 8 Mar 00 Time 0255	Date 3/8/00 Time 2155	(Yes) / No
Test Dead								
10	HOLD	BKR 211E-1 MCC 2A1-C2 CLG WATER TO 21 MD AFW PUMP MV-32026 Bldg: Turbine Building/Old Admin, Floor: ELEVATION 695, Room: , Remarks: E.5/9.5 12/22 AFW PUMP ROOM On For: M.S. P FLYNN	ON	OFF	N	Date 8 Mar 00 Time 0254	Date 3/8/00 Time 2156	(Yes) / No
Test Dead								
11	HOLD	MV-32336 32336 21 MD AFW PMP SUCT FROM CST MV Bldg: Turbine Building/Old Admin, Floor: ELEVATION 699, Room: , Remarks: IN 4" LINE F.4/8.6 On For: M.S. P FLYNN	CARD REMOVED	CLOSED	Y	Date 3-8-00 Time 0242 Date 8 Mar 00 Time 0245	Date 3/8/00 Time 2145 Date 3/8/00 Time 2260	(Yes) / No
12	HOLD	MV-32026 32026 21 MD AFW PMP SUCT CL SPLY MV Bldg: Turbine Building/Old Admin, Floor: ELEVATION 707, Room: , Remarks: IN 4" LINE F.2/8.5 On For: M.S. P FLYNN	CARD REMOVED	CLOSED	N	Date 8 Mar 00 Time 0256	Date 3/8/00 Time 2255	(Yes) / No
Handwheel								
13	SECURE	AF-21-3 21 MD AFW PMP SUCT DRN Bldg: Turbine Building/Old Admin, Floor: , Room: , Remarks: On For: M.S. P FLYNN	CLOSED/CAPPED	OPEN	N	Date 8 Mar 00 Time 0259	Date 3/8/00 Time 2260	Yes / (No)
14	SECURE	2AF-18-13 21 MD AFW PMP CASING DRN Bldg: Turbine Building/Old Admin, Floor: , Room: , Remarks: On For: M.S. P FLYNN	CLOSED	OPEN	N	Date 8 Mar 00 Time 0300	Date 3/8/00 Time 2200	Yes / (No)

MASTER

Title: P3108-1-121 121 SAFEGUARDS TRAVELING SCREEN ANNUAL
Assoc. Work Doc: P3108-1-121
Isolated For: M.S. JIM BALK; M.S. JEFFREY CURTIS

Oid: 1226022

Prepared by: JENSEN, KEVIN D (12/28/99 09:33) Reviewed by: ROGERS, SCOTT A (03/05/00 17:55)
Approved by: ROGERS, SCOTT A (03/05/00 17:55) Activated by: ROGERS, SCOTT A (03/05/00 17:55)

Isolation

Instructions:

Pre-Job Briefing Complete KRJ Date: 3/6/00

[ ] CV Air Supply Tag(s)
[ ] Fire Protection Vlv Position Tag(s)
[ ] Fuse Plugs Installed

Isolation Completed & Computer Updated By: KRJ Date: 3-6-00

Notes:

INVALIDATED

Restoration

Instructions:

[ ] Partial Restoration Attachment (PING 1072)
[ ] Temporary Restoration Attachment (PING 7471)
[ ] Isolation Cross Reference

Cross-Ref WO's Released: N/A Date: N/A

Isolation Released By: B Schultz (M.S. JEFFREY CURTIS) Date: 3-6-00

SS Permission to Restore: KRJ V.I.A Phone WAGGONER Date: 3-8-00

Isolation Released By: S. Wheeler (M.S. JIM BALK) Date: 3-8-00

SS Permission to Restore: KRJ V.I.A Phone WAGGONER Date: 3-8-00

Pre-Job Briefing Complete KRJ Date: 3-8-00

[ ] CV Air Supply Tag(s)
[ ] Fire Protection Vlv Position Tag(s)
[ ] Fuse Plugs Returned to Control Room

Restoration Completed & Computer Updated By: KRJ Date: 3-8-00

Review: _____ (SS) Time: _____ Date: _____

Notes:

Tag No.	Tag Type	Equipment Id & Name	Normal Position	Isolated Position	IV	Hung by / Verified by	Removed by / Verified By	Returned Normal
1	INFO	CS-7038501 7038501 121 SFGDS TRVLG SCRN AUTO/OFF/HAND SEL ES	AUTO	OFF	N	KRJ Date 3-Mar-00 Time 0145	D. Trumbo Date 3-8-00 Time 1100	Yes No

Bldg: Safeguards Screenhouse/Hypobromous, Floor: ELEVATION 695, Room: , Remarks: C1.8/81.7 ON LCL PNL 70385
On For: M.S. JIM BALK

Tag No.	Tag Type	Equipment Id & Name	Normal Position	Isolated Position	IV	Hung by / Verified by	Removed by / Verified By	Returned Normal
2	HOLD	CL-61-1 121 SAFEGUARD TRAVELING SCREEN-CLR WATER Bldg: , Floor: , Room: , Remarks: On For: M.S. JIM BALK	OPEN	CLOSED	N	Date 6/14/00 Time 0145	Date 3-8-00 Time 1100	(Yes) No
3	HOLD	BKR 111C-10 MCC 1AB1-A1 121 CLG WTR SFGD TRVLG SCRN Bldg: Safeguards Screenhouse/Hypobromous, Floor: ELEVATION 695, Room: , Remarks: B1.2/81.6 NEAR 11/12 CL STRNR Test Dead On For: M.S. JIM BALK	ON	OFF	N	Date 6/14/00 Time 0145	Date 3-8-00 Time 1100	(Yes) No
4	HOLD	BKR 111C-10 MCC 1AB1-A1 121 CLG WTR SFGD TRVLG SCRN Bldg: Safeguards Screenhouse/Hypobromous, Floor: ELEVATION 695, Room: , Remarks: B1.2/81.6 NEAR 11/12 CL STRNR Test Dead On For: M.S. JEFFREY CURTIS	ON	OFF	N	Date 6/14/00 Time 0145	Date 3-8-00 Time 1100	(Yes) No
5	INFO	CS-7038501 7038501 121 SFGDS TRVLG SCRN AUTO/OFF/HAND SEL ES Bldg: Safeguards Screenhouse/Hypobromous, Floor: ELEVATION 695, Room: , Remarks: C1.8/81.7 ON LCL PNL 70385 On For: M.S. JEFFREY CURTIS	AUTO	OFF	N	Date 6/14/00 Time 0145	Date 3-8-00 Time 1100	(Yes) No
6	HOLD	CL-61-1 121 SAFEGUARD TRAVELING SCREEN-CLR WATER Bldg: , Floor: , Room: , Remarks: On For: M.S. JEFFREY CURTIS	OPEN	CLOSED	N	Date 6/14/00 Time 0145	Date 3-8-00 Time 1100	(Yes) No

PITCQ-089	JOB PERFORMANCE MEASURE WORKSHEET	Rev. 5 10/98

TASK TITLE: Conduct An Emergency Plant Evacuation

JPM NUMBER: 00-SRO-A.3

RELATED PRA INFORMATION (SEE PITC 2.3): None

TASK NUMBER: SS 3440240303

K/A NUMBERS: 2.3.10

APPLICABLE METHOD OF TESTING:

Simulate Performance: ☒ Actual Performance: ☐

Evaluation Location: Turbine Building: ☐ Auxiliary Building: ☐

Simulator: ☐ Control Room: ☒

Other: ☐

Time for Completion: 10 Minutes

TASK APPLICABILITY: (Check all that apply) SRO: ☒ RO: ☐ NLO: ☐

PREPARED BY: Mark Jones **DATE:** 3/21/00

REVIEWED BY: _____ **DATE:** 3/28/00

APPROVED BY: _____ **DATE:** _____

Operator: _____ **(SRO / RO / NLO)**

Evaluator: _____

Date: _____

READ TO THE OPERATOR

I will explain the initial conditions, which step(s) to simulate or discuss, and provide initiating cues. When you complete the task successfully, the objective for this job performance measure will be satisfied.

INITIAL CONDITIONS:

- A Site Area Emergency has been declared on Unit 1 due to a large break LOCA.
- A plant evacuation has been recommended by the HP Supervisor.
- Even though it is during normal working hours, the TSC has not yet been declared operational.
- An HP has just faxed a radiation survey of the Auxiliary Building to the control room.

INITIATING CUES:

- As the Unit 2 SS/ED, perform a plant evacuation per F3-9.

JPM PERFORMANCE INFORMATION

Required Materials: F3-25 reentry radiation survey map indicating > 100 mR/hr general area on Unit 1 695' elevation.

General References: F3-9

Task Standards: Plant evacuation directed to the North Warehouse with the exception of Auxiliary Building Operators who are directed to the OSC.

Start Time: _____

NOTE: When providing "Evaluator Cues" to the examinee, care must be exercised to avoid prompting the examinee. Typically cues are only provided when the examinee's actions warrant receiving the information (i.e. the examinee looks or asks for the indication).

NOTE: Critical steps are marked with an "X" below the performance step number. Failure to meet the standard for any critical step shall result in failure of this JPM.

Performance Step: **Critical __X__ (S-1)**	Determine the wind direction and possible habitability problems at the onsite assembly areas. Choose either the North Warehouse or the Receiving Warehouse. • May use North Warehouse if wind is from 236° to 360° or 0° to 123°. • May use Receiving Warehouse if wind is from 123° to 360° or 0° to 34°
Standard:	Wind direction obtained and North Warehouse determined to be the appropriate assembly area.
Evaluator Cue:	**When examinee displays wind direction on ERCS or requests wind direction, inform examinee that, "wind direction is from 115°."**
Performance:	**SATISFACTORY** _____ **UNSATISFACTORY** _____
Comments:	_____

Performance Step: **Critical __X__ (S-2)**	If conditions are acceptable, inform the Control Room Operator of the designated Assembly Point and direct the Operator to sound the plant evacuation alarm.
Standard:	Control Room Operator directed to sound the evacuation alarm and make plant announcement directing evacuation to the North Warehouse.
Evaluator Note:	**The examinee may elect to sound the evacuation alarm and make the announcement his/her self. If he/she does, then the following action should be demonstrated:** • **Evacuation alarm sounded using control switch behind G panel in control room.** • **Announcement made over the PA system: ATTENTION ALL PLANT PERSONNEL. A PLANT EVACUATION HAS BEEN DECLARED. ALL EMERGENCY ORGANIZATION PERSONNEL REPORT TO AND REMAIN AT YOUR EMERGENCY DUTY STATIONS. ALL OTHER PERSONNEL SHALL EVACUATE TO THE NORTH WAREHOUSE.** • **Announcement repeated.**
Evaluator Cue:	• **If directed, as the RO, acknowledge direction, then report that, "the evacuation alarm has been sounded and announcement made to evacuate to the North Warehouse."** • **If examinee indicates that he/she will sound the evacuation alarm and make the announcement themselves, then allow the examinee to demonstrate the performance of these tasks and then inform examinee that, "the evacuation alarm has been sounded and announcement made to evacuate to the North Warehouse."**
Performance:	**SATISFACTORY _____ UNSATISFACTORY _____**
Comments:	_____

Performance Step: **Critical** _____	Implement F3-10, "Personnel Accountability." Personnel evacuation accountability should be completed within 30 minutes after evacuation plant page.
Standard:	Security notified to implement F3-10.
Evaluator Cue:	**When notified, acknowledge direction, then report that, "F3-10 will be implemented."**
Performance:	**SATISFACTORY** _____ **UNSATISFACTORY** _____
Comments:	_____

Performance Step: **Critical** **X** **(S-3)**	Evacuate the Auxiliary Building Operators to the OSC if: • General area radiation levels exceed 100 mR/hr, or • Recommended by the Radiation Protection Group or the REC.
Standard:	Survey map reviewed and determination made to evacuate Auxiliary Building Operators to the OSC.
Evaluator Cue:	**When directed, acknowledge direction, then report that, "Auxiliary Building Operators will evacuate to the OSC."**
Performance:	**SATISFACTORY** _____ **UNSATISFACTORY** _____
Comments:	_____

Terminating Cues: **When the Auxiliary Building Operator have been directed to evacuate to the OSC, inform examinee that, "this JPM is complete."**

Stop Time: _____

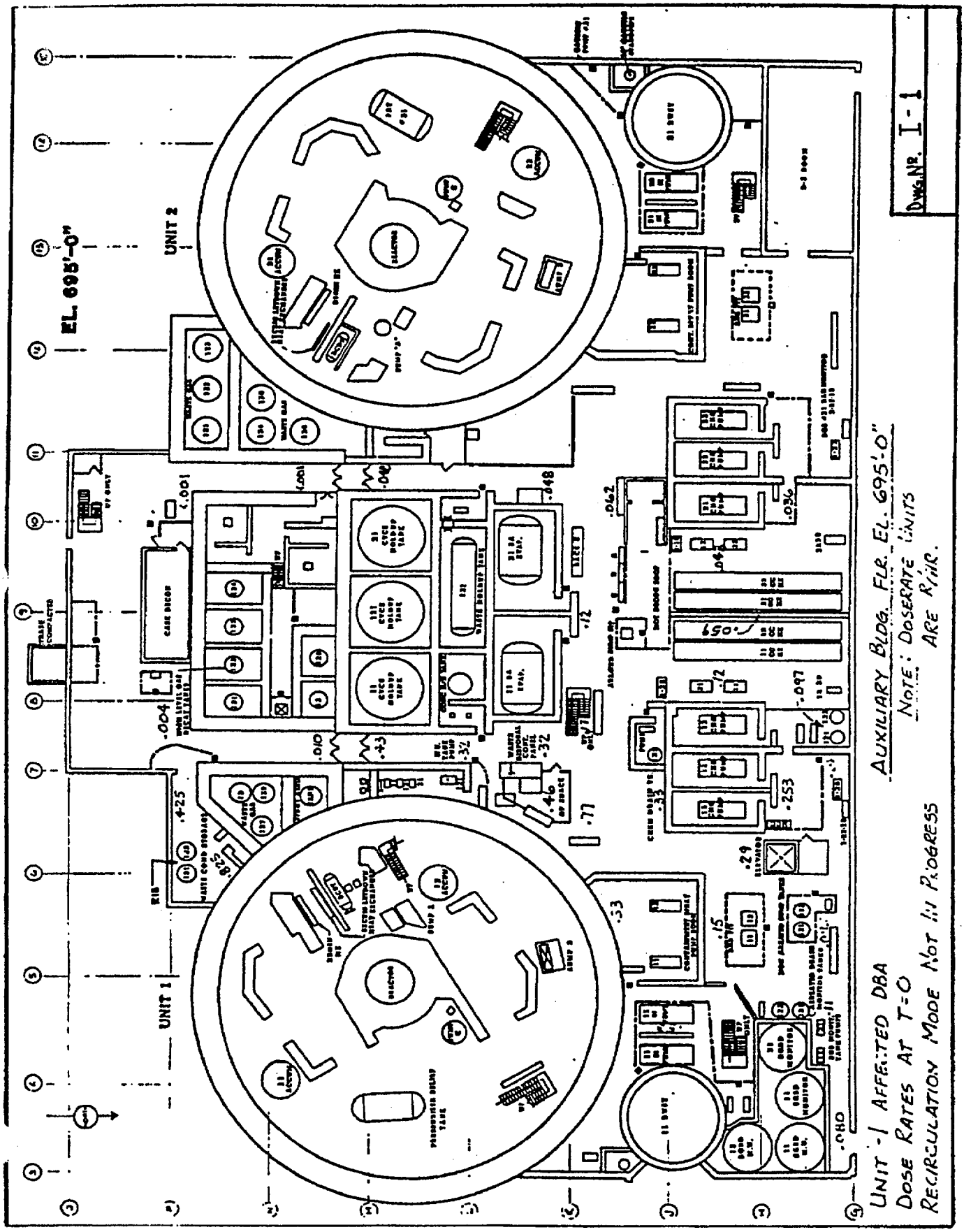
EL. 695'-0"
UNIT 2
UNIT 1
DWG. NR. I-1
AUXILIARY BLDG. FLR. EL. 695'-0"
NOTE: DOSERATE UNITS ARE R/HR.
UNIT -1 AFFECTED DBA
DOSE RATES AT T=0
RECIRCULATION MODE NOT IN PROGRESS

TURNOVER SHEET

INITIAL CONDITIONS:

- A Site Area Emergency has been declared on Unit 1 due to a large break LOCA.
- A plant evacuation has been recommended by the HP Supervisor.
- Even though it is during normal working hours, the TSC has not yet been declared operational.
- An HP has just faxed a radiation survey of the Auxiliary Building to the control room.

INITIATING CUES:

- As the Unit 2 SS/ED, perform a plant evacuation per F3-9.

PITCQ-089	JOB PERFORMANCE MEASURE WORKSHEET	Rev. 5 - 10/98

TASK TITLE: Complete The ED Checklist For A General Emergency

JPM NUMBER: ADMIN 4 Rev. 3

RELATED PRA INFORMATION (SEE PITC 2.3): None

TASK NUMBER: SS 3440230303

K/A NUMBERS: 2.4.38

APPLICABLE METHOD OF TESTING:

Simulate Performance: ☒ Actual Performance: ☐

Evaluation Location: Turbine Building: ☐ Auxiliary Building: ☐

Simulator: ☐ Control Room: ☒

Other: ☐

Time for Completion: 10 Minutes

TASK APPLICABILITY: (Check all that apply) SRO: ☒ RO: ☐ NLO: ☐

PREPARED BY: Mark Jones **DATE:** 3/21/00

REVIEWED BY: _____ **DATE:** 3/28/00

APPROVED BY: _____ **DATE:** _____

Operator: _____ **(SRO / RO / NLO)**

Evaluator: _____

Date: _____

READ TO THE OPERATOR

I will explain the initial conditions, which step(s) to simulate or discuss, and provide initiating cues. When you complete the task successfully, the objective for this job performance measure will be satisfied.

INITIAL CONDITIONS:

- Unit 1 has experienced a loss of feedwater and condensate systems, followed by a loss of auxiliary feedwater.
- A General Emergency has been declared on Unit 1.
- The SM has assumed the role of ED and has partially completed the PINGP 577.
- The SEC has been summoned to the Control Room and has completed the Meteorological Data on PINGP 577.

INITIATING CUES:

- The SM/ED directs you as the Unit 2 SS to assume interim ED responsibilities and to complete the PINGP 1125, "ED Checklist".
- **THIS JPM IS TIME CRITICAL.**

JPM PERFORMANCE INFORMATION

Required Materials: PINGP 577 all sections filled in except for protective action recommendations. PINGP 577 must indicate wind speed < 5 mph, General Emergency declared based on EAL 7E, and no radiological releases in progress.

General References: PINGP 1125, PINGP 577, and F3-2

Task Standards: PING 1125 initiated, PINGP 577 completed and delivered to the SEC within 10 minutes of the declaration time, and PA announcement made.

Start Time: _____

NOTE: When providing "Evaluator Cues" to the examinee, care must be exercised to avoid prompting the examinee. Typically cues are only provided when the examinee's actions warrant receiving the information (i.e. the examinee looks or asks for the indication).

NOTE: Critical steps are marked with an "X" below the performance step number. Failure to meet the standard for any critical step shall result in failure of this JPM.

Performance Step: **Critical** __X__ **(S-1)**	Fills in the time of event declaration at the top of PINGP 1125.
Standard:	Declaration time filled in.
Performance:	**SATISFACTORY** _____ **UNSATISFACTORY** _____
Comments:	_____

Performance Step: Assume the role of Emergency Director (F3-4).
Critical X (S-1)

Standard: Initials and writes in the time that the ED role was assumed.

Evaluator Cue: **If asked when the ED role was assumed, inform examinee that, "the ED role was assumed 10 minutes before event declaration."**

Performance: **SATISFACTORY** _____ **UNSATISFACTORY** _____

Comments: _____

Performance Step: Ensure the SEC has been summoned and starts the completion of the notification report form (PINGP 577).
Critical X (S-1)

Standard: Initials and writes in the time that the SEC was summoned.

Evaluator Cue: **If asked when the SEC was summoned, inform examinee that, "the SEC was summoned to the control room 5 minutes before event declaration."**

Performance: **SATISFACTORY** _____ **UNSATISFACTORY** _____

Comments: _____

Performance Step: Recommend evacuation for the general public on PINGP 577 as designate in Figure 1, F3-8.1.
Critical X (S-2)
- If wind < 5 mph, then evacuate a 5 mile radius and monitor radio/TV.

Standard: Fills in protective action recommendation for evacuation of all sectors out to 5 miles and circles subareas 5N, 5E, 5S, and 5W.

Performance: **SATISFACTORY** _____ **UNSATISFACTORY** _____

Comments: _____

Performance Step: **Critical X (S-3)**	Review and approve the notification report form PINGP 577.
Standard:	PINGP 577 reviewed for completeness and accuracy, and signed for approval.
Performance:	**SATISFACTORY** _____ **UNSATISFACTORY** _____
Comments:	_____

Performance Step: **Critical X (S-4)**	Direct the SEC to complete the notifications of state and local agencies and, if not already performed, activate the NSP Emergency Response Organization in accordance with F3-5 and PINGP 580.
Standard:	PINGP 577 given to the SEC within 10 minutes of event declaration, with the direction to complete notifications of state and local agencies within 15 minutes of event declaration.
Evaluator Note:	**State and local agencies shall be notified within 15 minutes of event declaration. To ensure this can be accomplished, the SEC is required to have the completed PINGP 577 within 10 minutes of event declaration.**
Evaluator Cue:	**When examinee indicates that he/she would give the PINGP 577 to the SEC with direction for notifications, acknowledge as the SEC, then inform examinee that, "notifications will be made within 15 minutes of event declaration."**
Performance:	**SATISFACTORY** _____ **UNSATISFACTORY** _____
Comments:	_____

Performance Step: Announce the emergency class over PA System:

Critical X **(S-5)**

ATTENTION ALL PLANT PERSONNEL:
A GENERAL EMERGENCY HAS BEEN DECLARED BASED ON (brief description of event).
ALL MEMBERS OF THE EMERGENCY RESPONSE ORGANIZATION REPORT TO YOUR EMERGENCY DUTY STATIONS OR EMERGENCY CENTER. ALL OTHER PERSONNEL STANDBY FOR FURTHER INSTRUCTIONS.

Repeat announcement.

Standard: Announcement made and repeated.

Evaluator Cue: **When examinee indicates that he/she would make the announcement and repeat it, inform examinee that, "the announcement has been made and repeated."**

Performance: **SATISFACTORY** _____ **UNSATISFACTORY** _____

Comments: _____

Terminating Cues: **When announcement has been made, inform examinee that, "this JPM is complete."**

Stop Time: _____

TURNOVER SHEET

INITIAL CONDITIONS:

- Unit 1 has experienced a loss of feedwater and condensate systems, followed by a loss of auxiliary feedwater.
- A General Emergency has been declared on Unit 1.
- The SM has assumed the role of ED and has partially completed the PINGP 577.
- The SEC has been summoned to the Control Room and has completed the Meteorological Data on PINGP 577.

INITIATING CUES:

- The SM/ED directs you as the Unit 2 SS to assume interim ED responsibilities and to complete the PINGP 1125, "ED Checklist".
- **THIS JPM IS TIME CRITICAL.**

INITIAL SUBMITTAL OF THE WALKTHROUGH JPMS

FOR THE PRAIRIE ISLAND INITIAL EXAMINATION THE WEEK OF MAY 15, 2000

PITCQ-089	JOB PERFORMANCE MEASURE WORKSHEET	Rev. 5 10/98

TASK TITLE: Raise 11 Accumulator Level (Requiring Vent Of Accumulator)

JPM NUMBER: 00-SRO-S.2

RELATED PRA INFORMATION (SEE PITC 2.3): None

TASK NUMBER: CRO 006.ATI.04 / CRO 0060050101

K/A NUMBERS: 2.1.23 006A113

APPLICABLE METHOD OF TESTING:

Simulate Performance: ☐ Actual Performance: ☒

Evaluation Location: Turbine Building: ☐ Auxiliary Building: ☐

Simulator: ☒ Control Room: ☐

Other: ☐

Time for Completion: 25 Minutes

TASK APPLICABILITY: (Check all that apply) SRO: ☒ RO: ☒ NLO: ☐

PREPARED BY: Mark Jones **DATE:** 3/21/00

REVIEWED BY: _____ **DATE:** 3/28/00

APPROVED BY: _____ **DATE:** _____

Operator: _____ **(SRO / RO / NLO)**

Evaluator: _____

Date: _____

READ TO THE OPERATOR

I will explain the initial conditions, which step(s) to simulate or discuss, and provide initiating cues. When you complete the task successfully, the objective for this job performance measure will be satisfied.

INITIAL CONDITIONS:

- A slow leak has been diagnosed in 11 accumulator sample line.
- 11 accumulator level has decreased to the low level alarm.
- 11 SI pump has been prelubricated and an operator is standing by to perform local checks.

INITIATING CUES:

- The SS directs you to restore 11 accumulator level to normal per 1C18, section 5.4.

JPM PERFORMANCE INFORMATION

Required Materials: None

General References: 1C18

Task Standards: 11 accumulator level and pressure restored to normal operating band.

Start Time: _____

NOTE: When providing "Evaluator Cues" to the examinee, care must be exercised to avoid prompting the examinee. Typically cues are only provided when the examinee's actions warrant receiving the information (i.e. the examinee looks or asks for the indication).

NOTE: Critical steps are marked with an "X" below the performance step number. Failure to meet the standard for any critical step shall result in failure of this JPM.

Performance Step: **Critical** _____	Verify SI-15-3, 11 SI PUMP TO TEST LINE is OPEN.
Standard:	Outplant operator dispatched to verify SI-15-3 is OPEN.
Evaluator Note:	**SI-15-3 is the valve that should be verified per initial conditions of this JPM, which states that 11 SI pump is going to be used.**
Evaluator Cue:	**When directed, acknowledge, then report that, "SI-15-3 is open."**
Performance:	**SATISFACTORY** _____ **UNSATISFACTORY** _____
Comments:	_____

Performance Step: Verify MV-32202, SIT TEST LINE TO RWST, is OPEN.
Critical _____

Standard: Verifies CS-46204 red light is on and green light is off.

Evaluator Cue: **If requested as Outplant Operator, acknowledge, then report that, "MV-32202 is open."**

Performance: **SATISFACTORY** _____ **UNSATISFACTORY** _____

Comments: _____

Performance Step: Verify MV-32203, SIT TEST LINE TO RWST, is OPEN.
Critical _____

Standard: Verifies CS-46205 red light is on and green light is off.

Evaluator Cue: **If requested as Outplant Operator, acknowledge, then report that, "MV-32203 is open."**

Performance: **SATISFACTORY** _____ **UNSATISFACTORY** _____

Comments: _____

Performance Step: Log entry into LCO for Unit 1 BAST per T.S. 3.2.C.2.
Critical _____

Standard: SS notified of LCO entry requirement.

Evaluator Cue: **When notified, acknowledge, then report that, "the LCO will logged."**

Performance: **SATISFACTORY** _____ **UNSATISFACTORY** _____

Comments: _____

Performance Step: **Critical X (S-1)**	Open one of the RWST header isolation valves to the SI pumps: MV-32079, RWST TO SI PUMPS, using CS-46195 MV-32080, RWST TO SI PUMPS, using CS-46196
Standard:	Either MV-32079 or MV-32080 opened using CS-46195 or CS-46196 respectively; red light on, green light off.
Performance:	**SATISFACTORY** _____ **UNSATISFACTORY** _____
Comments:	_____

Performance Step: **Critical X (S-2)**	Start the desired SI pump and record the time: CS-46178, 11 SI PUMP.
Standard:	11 SI pump started using CS-46178; red light on, green light off.
Performance:	**SATISFACTORY** _____ **UNSATISFACTORY** _____
Comments:	_____

Performance Step: **Critical** _____	Locally observe proper SI pump operation: Bearing lubrication (slinger rings) Return oil flow indication Oil pressure indication.
Standard:	Outplant operator directed to perform local pump checks.
Evaluator Cue:	**When directed, acknowledge, then report that, "the local checks on the pump all look good."**
Performance:	**SATISFACTORY** _____ **UNSATISFACTORY** _____
Comments:	_____

Performance Step: **Critical __X__ (S-3)**	Under administrative control, OPEN the desired accumulator make-up isolation valve: CV-31442, 11 ACCUM M-U, using CS-46217.
Standard:	CV-31442 OPENED using CS-46217; red light on, green light off.
Evaluator Note:	• **CV-31442 is opened under the administrative control of an operator designated to have the responsibility for closing the valve within one minute following an accident.** • **The accumulator high pressure alarm should come in well before accumulator level reaches 56%.**
Evaluator Cue:	**If asked, inform examinee that, "you (the examinee) are the designated operator for opening valves under administrative control."**
Performance:	**SATISFACTORY** _____ **UNSATISFACTORY** _____
Comments:	_____

Performance Step: **Critical X (S-4)**	When accumulator level reaches 56% or the accumulator high pressure alarm comes in, then CLOSE the accumulator make-up isolation valve: CV-31442, 11 ACCUM M-U, using CS-46217.
Standard:	At 56% accumulator level or as soon as the accumulator high pressure alarm comes in, CV-31442 is CLOSED using CS-46217; green light on, red light off.
Evaluator Note:	**The step in the procedure only addresses the level criteria for closing the valve. A note at the beginning of this section of the procedure states that due to level indication sensitivity to pressure, "accumulator level should not be changed unless pressure is within the normal operating band." When the accumulator high pressure alarm comes in, pressure is no longer within the normal operating band. FAILURE OF THIS TASK OCCURS IF CONTINUED FILLING RESULTS IN INOPERABILITY OF 11 ACCUMULATOR EITHER ON LEVEL > 83% OR PRESSURE > 770 PSIG.**
Evaluator Cue:	• **If asked for cause of high pressure alarm, inform examinee that, "the high pressure alarm will be discussed with the System Engineer."** • **If asked for guidance, direct examinee to, "continue as directed by the procedure."**
Performance:	**SATISFACTORY** _____ **UNSATISFACTORY** _____
Comments:	_____

Performance Step: **Critical** _____	Independently verify the accumulator make-up isolation valve (CV-31442) is CLOSED.
Standard:	Another operator requested to perform IV on CV-31442.
Evaluator Cue:	**When directed, acknowledge, then report that, "the IV is completed."**
Performance:	**SATISFACTORY** _____ **UNSATISFACTORY** _____
Comments:	_____

Performance Step: **Critical** _____	Ensure the SI pump has run for a minimum of 15 minutes.
Standard:	Determines that the SI pump has not ran for 15 minutes and leaves it running.
Evaluator Note:	**Examinee should continue on and address the accumulator high pressure alarm.**
Evaluator Cue:	**If asked or if examinee indicates that he/she has completed the required steps of 1C18 for raising accumulator level, direct examinee to, "respond to the accumulator high pressure alarm."**
Performance:	**SATISFACTORY** _____ **UNSATISFACTORY** _____
Comments:	_____

Performance Step: **Critical** _____	Respond to annunciator 47018:0203, 11 ACCUMULATOR HI/LO PRESS: • Check pressure high or low. • Verify accumulator level within specification • If pressure high, then reduce pressure per 1C18.
Standard:	• Accumulator pressure is determined to be high. • Accumulator level is verified within specification. • Transition is made to 1C18 to reduce pressure.
Performance:	**SATISFACTORY** _____ **UNSATISFACTORY** _____
Comments:	_____

Performance Step: Verify personnel are not working in the vicinity of CV-31242, ACCUM NITROGEN SPLY LINE VENT.
Critical _____

Standard: Verification made that there are no personnel inside the containment.

Evaluator Cue: **If asked, report that, "there are no personnel inside the containment."**

Performance: **SATISFACTORY** _____ **UNSATISFACTORY** _____

Comments: _____

Performance Step: Verify CV-31440, ACCUM NITROGEN SPLY, is CLOSED.
Critical _____

Standard: Verifies CS-46212 green light is on and red light is off.

Performance: **SATISFACTORY** _____ **UNSATISFACTORY** _____

Comments: _____

Performance Step: Check CV-31242, ACCUM NITROGEN SPLY LINE VENT, is CLOSED by decreasing 1HC-945 to the 0% or "CLOSE" position.
Critical _____

Standard: Verifies 1HC-945 output is set at 0%.

Performance: **SATISFACTORY** _____ **UNSATISFACTORY** _____

Comments: _____

Performance Step: **Critical __X__ (S-5)**	Under administrative control, OPEN the desired accumulator Nitrogen supply valve: CV-31441, NITROGEN TO 11 ACCUM, using CS-46219.
Standard:	CV-31441 OPENED using CS-46219; red light on, green light off.
Performance:	**SATISFACTORY** _____ **UNSATISFACTORY** _____
Comments:	_____

Performance Step: **Critical __X__ (S-6)**	Slowly increase 1HC-945 output to OPEN CV-31242, ACCUM NITROGEN SPLY LINE VENT, until an accumulator pressure decrease is observed.
Standard:	CV-31242 is opened by increasing 1HC-945 output and pressure is decreasing.
Performance:	**SATISFACTORY** _____ **UNSATISFACTORY** _____
Comments:	_____

Performance Step: **Critical __X__ (S-7)**	When the desired pressure (740 ± 30 psig per T.S. 3.3.A.) is reached, then decrease 1HC-945 output to the 0% or "CLOSE" position.
Standard:	CV-31242 is closed by decreasing 1HC-945 output, such that accumulator pressure is stable within the Tech Spec band of 740 ± 30 psig.
Evaluator Note:	**FAILURE OF THIS TASK OCCURS IF CONTINUED VENTING RESULTS IN INOPERABILITY OF 11 ACCUMULATOR ON PRESSURE < 710 PSIG.**
Performance:	**SATISFACTORY** _____ **UNSATISFACTORY** _____
Comments:	_____

Performance Step: **Critical** _____	Independently verify 1HC-945, ACCUM NITROGEN SPLY LINE VENT, output is 0% ("CLOSE" position).
Standard:	Another operator requested to perform IV on 1HC-945.
Evaluator Cue:	**When directed, acknowledge, then report that, "the IV is completed."**
Performance:	**SATISFACTORY** _____ **UNSATISFACTORY** _____
Comments:	_____

Performance Step: **Critical** __X__ **(S-8)**	CLOSE the desired accumulator Nitrogen supply valve: CV-31441, NITROGEN TO 11 ACCUM, using CS-46219.
Standard:	CV-31441 CLOSED using CS-46219; green light on, red light off.
Performance:	**SATISFACTORY** _____ **UNSATISFACTORY** _____
Comments:	_____

Performance Step: **Critical** _____	Independently verify the desired accumulator Nitrogen supply valve (CV-31441) is CLOSED.
Standard:	Another operator requested to perform IV on CV-31441.
Evaluator Cue:	**When directed, acknowledge, then report that, "the IV is completed."**
Performance:	**SATISFACTORY** _____ **UNSATISFACTORY** _____
Comments:	_____

Performance Step: **Critical** _____	Notify the SI System Engineer of the completion of this procedure for NRCB 88-08 and NRC IN 97-19 evaluation of thermal fatigue cycling potential.
Standard:	SI System Engineer notified of the need to perform NRCB 88-08 and NRC IN 97-19 evaluations of thermal fatigue cycling potential.
Evaluator Cue:	**When notified, acknowledge, then inform examinee that, "the evaluations will be completed."**
Performance:	**SATISFACTORY** _____ **UNSATISFACTORY** _____
Comments:	_____

Terminating Cues: **When 11 accumulator level and pressure are restored to normal, and the SI system engineer has been notified to perform thermal fatigue cycling evaluations, inform examinee that, "this JPM is complete."**

Stop Time: _____

SIMULATOR SETUP

Instructor Guide:

- Initialize the simulator to IC-10.
- Place the simulator in "RUN" and allow ERCS to initialize.
- Drain 11 accumulator per 1C18, section 5.1, until the low level alarm is received.
- Increase 11 accumulator pressure per 1C18, section 5.5, until the high pressure alarm is received.
- Decrease 11 accumulator pressure per 1C18, section 5.6, until the high pressure alarm has just cleared.
- Place QP "11ACCUM" on the ERCS screen in the instructor's booth.
- During JPM performance, print the instructor's booth ERCS screen with QP "11ACCUM" displayed:
  - Accumulator level > 83%.
  - Accumulator pressure > 770 psig or < 710 psig.

SIMULATOR SETUP

Relative Order	System or Panel Drawing	TYPE	CODE	Severity or Value	Event Trigger	TIMING	DESCRIPTION
NONE							

TURNOVER SHEET

INITIAL CONDITIONS:

- A slow leak has been diagnosed in 11 accumulator sample line.
- 11 accumulator level has decreased to the low level alarm.
- 11 SI pump has been prelubricated and an operator is standing by to perform local checks.

INITIATING CUES:

- The SS directs you to restore 11 accumulator level to normal per 1C18, section 5.4.

TASK TITLE: Control Rod Exercise With Stuck Rod

JPM NUMBER: 00-SRO-S.1

RELATED PRA INFORMATION (SEE PITC 2.3): None

TASK NUMBER: CRO 0010010201

K/A NUMBERS: 2.1.23 001A203

APPLICABLE METHOD OF TESTING:

Simulate Performance: ☐ Actual Performance: ☒

Evaluation Location: Turbine Building: ☐ Auxiliary Building: ☐

Simulator: ☒ Control Room: ☐

Other: ☐

Time for Completion: 20 Minutes

TASK APPLICABILITY: (Check all that apply) SRO: ☒ RO: ☒ NLO: ☐

PREPARED BY: Mark Jones **DATE:** 3/21/00

REVIEWED BY: _____ **DATE:** 3/28/00

APPROVED BY: _____ **DATE:** _____

Operator: _____ **(SRO / RO / NLO)**

Evaluator: _____

Date: _____

READ TO THE OPERATOR

I will explain the initial conditions, which step(s) to simulate or discuss, and provide initiating cues. When you complete the task successfully, the objective for this job performance measure will be satisfied.

INITIAL CONDITIONS:

- SP 1047, "Control Rod Quarterly Exercise", is due.

INITIATING CUES:

- The SS directs you to perform SP 1047 beginning at step 7.2.1.

JPM PERFORMANCE INFORMATION

Required Materials: **Copy of SP 1047 with step 7.1 completed.**

General References: **SP 1047, C5**

Task Standards: **Surveillance initiated, then discontinued when determination of stuck rod made.**

Start Time: _____

NOTE: When providing "Evaluator Cues" to the examinee, care must be exercised to avoid prompting the examinee. Typically cues are only provided when the examinee's actions warrant receiving the information (i.e. the examinee looks or asks for the indication).

NOTE: Critical steps are marked with an "X" below the performance step number. Failure to meet the standard for any critical step shall result in failure of this JPM.

Performance Step: **Critical** _____	Obtain the key for the Unit 1 Lift Coil Disconnect Switch Cabinet from the Shift Supervisor.
Standard:	Obtains key #112.
Evaluator Note:	**On the simulator, this key is in the instructor's booth.**
Evaluator Cue:	**When examinee requests key #112, provide it to them.**
Performance:	**SATISFACTORY** _____ **UNSATISFACTORY** _____
Comments:	_____

Performance Step: At any convenient ERCS terminal, use the ERCS Group Display "SP 1047" to display the following parameters for the duration of the test:
Critical _____

1Y0701D	ROD CTRL POWER CAB 1AC
1Y0702D	ROD CTRL POWER CAB 2AC
1Y0703D	ROD CTRL POWER CAB 1BD
1Y0704D	ROD CONTROL SYSTEM (LOGIC)

Standard: ERCS display group SP 1047 displayed on an available ERCS terminal.

Performance: **SATISFACTORY** _____ **UNSATISFACTORY** _____

Comments: _____

Performance Step: Place CS-46280, ROD BANK SEL SW, in "MANUAL".
Critical _____

Standard: CS-46280 placed in MANUAL.

Performance: **SATISFACTORY** _____ **UNSATISFACTORY** _____

Comments: _____

Performance Step: Record each Group Position and RPI Position in the Initial Steps Column of Table 1.
Critical _____

Standard: Each group position and RPI position recorded in the initial steps column of Table 1.

Performance: **SATISFACTORY** _____ **UNSATISFACTORY** _____

Comments: _____

Performance Step: Place CS-46280, ROD BANK SEL, to the Bank to be exercised.
Critical X (S-1)

Standard: CS-46280 placed to the SDA position for Shutdown Bank A.

Evaluator Note: **Rods should be exercised in the order listed in Table 1.**

Performance: **SATISFACTORY** _____ **UNSATISFACTORY** _____

Comments: _____

Performance Step: OPEN all of the lift coil disconnect switches for the bank being exercised
Critical X (S-1) EXCEPT for the control rod to be exercised in that bank.

Standard: Cabinet opened, disconnect switches for rods I11, C9, and K5 OPENED, all other switches left closed.

Performance: **SATISFACTORY** _____ **UNSATISFACTORY** _____

Comments: _____

Performance Step: Insert the selected control rod 12 ± 1 steps based on the group step
Critical X (S-2) counter indication.

Standard: SDA rod E-3 inserted to 216 steps.

Evaluator Note: **An urgent failure alarm will be generated. This is normal for this configuration.**

Performance: **SATISFACTORY** _____ **UNSATISFACTORY** _____

Comments: _____

Performance Step: **Critical** _____	Record the group step counter value for the bank and individual rod position indicator for the control rod in the Interim Steps Column of Table 1.
Standard:	Group position and RPI position recorded in the interim steps column of Table 1.
Performance:	**SATISFACTORY** _____ **UNSATISFACTORY** _____
Comments:	_____

Performance Step: **Critical** _____	For each control rod moved, verify ERCS Display "SP 1047" agrees with Table 3. Initial the Table 3 Alarm Check Column of Table 1.
Standard:	ERCS Display SP 1047 agreement with Table 3 verified and initialed in the Table 3 Alarm Check Column of Table 1.
Performance:	**SATISFACTORY** _____ **UNSATISFACTORY** _____
Comments:	_____

Performance Step: **Critical** __X__ **(S-3)**	Withdraw the control rod to its original position as indicated by it s group counter.
Standard:	SDA rod E-3 withdrawn to 228 steps.
Evaluator Note:	**Withdrawal of the rod is critical, not 228 steps, since the examinee may stop withdrawal once the rod is determined to be stuck.**
Performance:	**SATISFACTORY** _____ **UNSATISFACTORY** _____
Comments:	_____

Performance Step: **Critical _____**	Record the group step counter and individual rod position indicator values in the Final Steps Column of Table 1.
Standard:	Group position and RPI position recorded in the final steps column of Table 1.
Evaluator Note:	**It is not necessary to complete this step, if examinee recognizes the stuck rod and discontinues the SP.**
Performance:	**SATISFACTORY _____ UNSATISFACTORY _____**
Comments:	_____

Performance Step: **Critical _____**	Verify initial and final group step counter positions agree.
Standard:	Initial and final group positions verified to be 228 steps.
Evaluator Note:	**It is not necessary to complete this step, if examinee recognizes the stuck rod and discontinues the SP.**
Performance:	**SATISFACTORY _____ UNSATISFACTORY _____**
Comments:	_____

Performance Step: **Critical X (S-4)**	Verify control rod motion by RPI, Tave and/or power changes. Initial Rod Motion column of Table 1.
Standard:	Stuck SDA rod E-3 identified and rod motion column is not initialed.
Evaluator Note:	**If stuck rod is not identified, then continue with JPM performance until the lift coil disconnect switches are aligned for testing the next rod in the bank.**
Evaluator Cue:	• **If examinee reports that SDA rod E-3 is stuck, acknowledge report, then direct the examinee to, "perform the actions required as a result of the stuck rod?"** • **If examinee does not identify stuck rod and aligns lift coil disconnect switches for testing the next rod in the bank, inform examinee that, "this JPM is complete."**
Performance:	**SATISFACTORY** _____ **UNSATISFACTORY** _____
Comments:	_____

Performance Step: **Critical X (S-5)**	Discontinue the surveillance and return rod control to normal.
Standard:	The following do not have to be performed in order: • Urgent failure alarm is reset by using pushbutton 46252. • Disconnect switches for rods I11, C9, and K5 are closed. • Control rods are placed in automatic by using CS-46280.
Evaluator Note:	**This and the remaining steps are required, by the acceptance criteria section of this SP, to be taken when a control rod does not move as required.**
Performance:	**SATISFACTORY** _____ **UNSATISFACTORY** _____
Comments:	_____

Performance Step: **Critical X (S-5)**	Apply T.S. 3.10.G.6.
Standard:	SS is notified that T.S. 3.10.G.6 needs to be entered and applied.
Evaluator Note:	**The critical part of this step is notifying the SS to apply the Tech Spec.**
Performance:	**SATISFACTORY** _____ **UNSATISFACTORY** _____
Comments:	_____

Performance Step: **Critical** _____	Notify the System Engineer.
Standard:	Rod Control System Engineer is notified of the stuck control rod.
Evaluator Note:	**The cue provided to the examinee will take care of the last step required by the SP, which is to issue a work order. The system engineer would probably be requested to issue this work order.**
Evaluator Cue:	**When notified, acknowledge report, then inform examinee that, "a work order will be initiated."**
Performance:	**SATISFACTORY** _____ **UNSATISFACTORY** _____
Comments:	_____

Terminating Cues: **When the surveillance has been discontinued, rod control returned to normal, and notifications made, inform examinee that, "this JPM is complete."**

Stop Time: _____

SIMULATOR SETUP

Instructor Guide:

- Initialize the simulator to IC-10.
- Place the simulator in "RUN" and allow ERCS to initialize.
- During performance of the JPM, when SDA rod E-3 is inserted to 216 steps, enter malfunction to fail rod to move. ***(Relative Order 1)***

SIMULATOR SETUP

Relative Order	System or Panel Drawing	TYPE	CODE	Severity or Value	Event Trigger	TIMING	DESCRIPTION
1	SIMRD02	MALF	RD0522		1		Control Rod Misalignment E-3-SBA GR1

TURNOVER SHEET

INITIAL CONDITIONS:

- SP 1047, "Control Rod Quarterly Exercise", is due.

INITIATING CUES:

- The SS directs you to perform SP 1047 beginning at step 7.2.1.

JOB PERFORMANCE MEASURE WORKSHEET

TASK TITLE: Start Up Containment Hydrogen Recombiner

JPM NUMBER: HC-1 Rev. 9

RELATED PRA INFORMATION (SEE PITC 2.3): None

TASK NUMBER: NLO 0280020104

K/A NUMBERS: 2.1.23 028A401

APPLICABLE METHOD OF TESTING:

Simulate Performance: ☒ Actual Performance: ☐

Evaluation Location: Turbine Building: ☐ Auxiliary Building: ☒

Simulator: ☐ Control Room: ☐

Other: ☐

Time for Completion: 13 Minutes

TASK APPLICABILITY: (Check all that apply) SRO: ☒ RO: ☒ NLO: ☒

PREPARED BY: Mark Jones **DATE:** 3/20/00

REVIEWED BY: _____ **DATE:** 3/28/00

APPROVED BY: _____ **DATE:** _____

Operator: _____ **(SRO / RO / NLO)**

Evaluator: _____

Date: _____

READ TO THE OPERATOR

I will explain the initial conditions, which step(s) to simulate or discuss, and provide initiating cues. When you complete the task successfully, the objective for this job performance measure will be satisfied.

INITIAL CONDITIONS:

- A LOCA has occurred on Unit 1.
- Containment H_2 concentration is 2%.
- Adequate power is available to supply the recombiners.

INITIATING CUES:

- The SS directs you to start up 11 Containment Hydrogen Recombiner per C19.8, beginning at step 5.1.2.

JPM PERFORMANCE INFORMATION

Required Materials: Calculator

General References: C19.8

Task Standards: 11 Hydrogen Recombiner in service at the required power setting.

Start Time: _____

NOTE: When providing "Evaluator Cues" to the examinee, care must be exercised to avoid prompting the examinee. Typically cues are only provided when the examinee's actions warrant receiving the information (i.e. the examinee looks or asks for the indication).

NOTE: Critical steps are marked with an "X" below the performance step number. Failure to meet the standard for any critical step shall result in failure of this JPM.

Performance Step: **Critical** _____	At the recombiner panel, verify the PWR ADJ potentiometer is set to zero.
Standard:	PWR ADJ potentiometer set to zero.
Evaluator Cue:	**When examinee indicates that he/she would check the PWR ADJ potentiometer setting, inform examinee that, "it reads zero."**
Performance:	**SATISFACTORY** _____ **UNSATISFACTORY** _____
Comments:	_____

Performance Step: At the recombiner panel, verify the PWR IN AVAIL lamp is lit.
Critical _____

Standard: PWR IN AVAIL lamp is lit.

Evaluator Cue: **When examinee indicates that he/she would check the PWR IN AVAIL lamp, inform examinee that, "it is lit."**

Performance: **SATISFACTORY** _____ **UNSATISFACTORY** _____

Comments: _____

Performance Step: Turn the PWR OUT SW to the "ON" position. The red lamp on the switch faceplate should be lit.
Critical **X** **(S-1)**

Standard: PWR OUT SW is in the ON position and the red indicating light is on.

Evaluator Cue: **When examinee indicates that he/she would turn the PWR OUT SW to the ON position, inform examinee that, "the switch is in the on position and the red indicating light is on."**

Performance: **SATISFACTORY** _____ **UNSATISFACTORY** _____

Comments: _____

Performance Step: Obtain the following plant conditions:
Present post-LOCA Containment Pressure in PSIG.
Pre-LOCA Containment Temperature from plant computer logs in °F.

Critical X **(S-1)**

Standard: Present containment pressure and pre-LOCA containment temperature obtained.

Evaluator Cue: **When examinee asks and indicates where data would be obtained, inform examinee that, "current containment pressure is 3.8 psig and pre-LOCA containment temperature was 90 °F."**

Performance: **SATISFACTORY** _____ **UNSATISFACTORY** _____

Comments: _____

Performance Step: Determine the pressure factor, Cp, from the Recombiner Power Correction Factor Versus Containment Pressure Curve (Figure 1).

Critical X **(S-1)**

Standard: Cp determined to be 1.2 ± 0.05.

Performance: **SATISFACTORY** _____ **UNSATISFACTORY** _____

Comments: _____

Performance Step: Multiply Cp, determined above, by the reference power setting to determine required recombiner power setting.

Critical X **(S-1)**

Standard: Required recombiner power setting determined to be 49 to 53 kw.

Performance: **SATISFACTORY** _____ **UNSATISFACTORY** _____

Comments: _____

Performance Step: **Critical** _____	Turn the PWR ADJ potentiometer clockwise until 5 KW is obtained on the PWR OUT meter.
Standard:	PWR ADJ potentiometer is adjusted to 5 kw as indicated on the PWR OUT meter.
Evaluator Cue:	**When examinee indicates that he/she would adjust the PWR ADJ potentiometer to 5 kw, inform examinee that, "the potentiometer is at 5 kw as indicated on the PWR OUT meter."**
Performance:	**SATISFACTORY** _____ **UNSATISFACTORY** _____
Comments:	_____

Performance Step: **Critical** _____	Hold for 10 minutes, then advance to 10 KW.
Standard:	PWR ADJ potentiometer held at 5 kw for 10 minutes, then adjusted to 10 kw as indicated on the PWR OUT meter.
Evaluator Cue:	• **When the examinee gets to this step, inform examinee that, "it has been 10 minutes since the PWR ADJ potentiometer was set to 5 kw."** • **When examinee indicates that he/she would adjust the PWR ADJ potentiometer to 10 kw, inform examinee that, "the potentiometer is at 10 kw as indicated on the PWR OUT meter."**
Performance:	**SATISFACTORY** _____ **UNSATISFACTORY** _____
Comments:	_____

Performance Step: Hold for 10 minutes, then advance to 20 KW.
Critical _____

Standard: PWR ADJ potentiometer held at 10 kw for 10 minutes, then adjusted to 20 kw as indicated on the PWR OUT meter.

Evaluator Cue:
- **When the examinee gets to this step, inform examinee that, "it has been 10 minutes since the PWR ADJ potentiometer was set to 10 kw."**
- **When examinee indicates that he/she would adjust the PWR ADJ potentiometer to 20 kw, inform examinee that, "the potentiometer is at 20 kw as indicated on the PWR OUT meter."**

Performance: **SATISFACTORY** _____ **UNSATISFACTORY** _____

Comments: _____

Performance Step: Hold for 5 minutes, then advance to power setting obtained above.
Critical X **(S-2)**

Standard: PWR ADJ potentiometer held at 20 kw for 5 minutes, then adjusted to the required recombiner power setting determined above (49 to 53 kw).

Evaluator Cue:
- **When the examinee gets to this step, inform examinee that, "it has been 5 minutes since the PWR ADJ potentiometer was set to 20 kw."**
- **When examinee indicates that he/she would adjust the PWR ADJ potentiometer to required recombiner power setting, inform examinee that, "the potentiometer is at the required setting as indicated on the PWR OUT meter."**

Performance: **SATISFACTORY** _____ **UNSATISFACTORY** _____

Comments: _____

Performance Step: **Critical** _____	Adjust potentiometer as required to maintain power setting.
Standard:	Required power setting maintained.
Evaluator Cue:	**If asked, inform examinee that, "required power setting is being maintained."**
Performance:	**SATISFACTORY** _____ **UNSATISFACTORY** _____
Comments:	_____

Performance Step: **Critical** _____	For reference use, read and record the temperature indicator TEMP OUT, which is located on the control panel (read all three thermocouples). Plot the temperature as a function of time, as show in the example Figure 2.
Standard:	All three thermocouples temperature as indicated on the TEMP OUT indicator, read and recorded.
Evaluator Cue:	**When examinee indicates that he/she would read and record all three thermocouple temperatures as indicated on the TEMP OUT indicator, inform examinee that, "all three thermocouples read 75 °F."**
Performance:	**SATISFACTORY** _____ **UNSATISFACTORY** _____
Comments:	_____

Terminating Cues: **When examinee has read the TEMP OUT indicator, inform examinee that, "this JPM is complete."**

Stop Time: _____

TURNOVER SHEET

INITIAL CONDITIONS:

- A LOCA has occurred on Unit 1.
- Containment H2 concentration is 2%.
- Adequate power is available to supply the recombiners.

INITIATING CUES:

- The SS directs you to start up 11 Containment Hydrogen Recombiner per C19.8, beginning at step 5.1.2.

PITCQ-089	JOB PERFORMANCE MEASURE WORKSHEET	Rev. 5 10/98

TASK TITLE: Perform RCP Isolation Following Loss Of All AC Power

JPM NUMBER: RC-8 Rev. 8

RELATED PRA INFORMATION (SEE PITC 2.3): This event is PRA related.

TASK NUMBER: CRO 003.ATI.05 / NLO 003.ATI.05

K/A NUMBERS: 2.1.23 003A401 003A408

APPLICABLE METHOD OF TESTING:

Simulate Performance: ☒ Actual Performance: ☐

Evaluation Location: Turbine Building: ☐ Auxiliary Building: ☒

Simulator: ☐ Control Room: ☐

Other: ☐

Time for Completion: 11 Minutes

TASK APPLICABILITY: (Check all that apply) SRO: ☒ RO: ☒ NLO: ☒

PREPARED BY: Mark Jones **DATE:** 3/20/00

REVIEWED BY: _____ **DATE:** 3/28/00

APPROVED BY: _____ **DATE:** _____

JPM PERFORMANCE INFORMATION

Required Materials: None

General References: 1ECA-0.0, 5AWI 3.10.0

Task Standards: RCP seals isolated.

Start Time: _____

NOTE: When providing "Evaluator Cues" to the examinee, care must be exercised to avoid prompting the examinee. Typically cues are only provided when the examinee's actions warrant receiving the information (i.e. the examinee looks or asks for the indication).

NOTE: Critical steps are marked with an "X" below the performance step number. Failure to meet the standard for any critical step shall result in failure of this JPM.

Operator: _____ **(SRO / RO / NLO)**

Evaluator: _____

Date: _____

READ TO THE OPERATOR

I will explain the initial conditions, which step(s) to simulate or discuss, and provide initiating cues. When you complete the task successfully, the objective for this job performance measure will be satisfied.

INITIAL CONDITIONS:

- A loss of all AC power has occurred on Unit 1.
- 1ECA-0.0 is in progress.

INITIATING CUES:

- The SS directs you to isolate Unit 1 RCP seals per 1ECA-0.0, step 18.

Performance Step: Dispatch Personnel To Locally Close Valves To Isolate RCP Seals:
Critical X (S-1)
- RCP seal return isolation valve (MV-32166) - CLOSED.

Standard: MV-32166 CLOSED as follows:
- Breaker 1L1-E1 turned off
- Motor clutch engaged and handwheel turned until indicator points to close.

Evaluator Note: **Not turning breaker 1L1-E1 off would be a procedural violation, but is not critical to performing this task.**

Evaluator Cue:
- **If asked, inform examinee that, "spring pack detentioning is not required."**
- **When examinee locates and indicates that he/she would turn off 1L1-E1, inform examinee that, "the breaker is off."**
- **When examinee locates and indicates that he/she would close MV-32166, inform examinee that, "the valve is closed."**

Performance: **SATISFACTORY** _____ **UNSATISFACTORY** _____

Comments: _____

Performance Step: Dispatch Personnel To Locally Close Valves To Isolate RCP Seals:
Critical X (S-1)
- RCP seal injection throttle valves (VC-14-1 and VC-14-2) - CLOSED.

Standard: VC-14-1 and VC-14-2 CLOSED.

Evaluator Cue: **When examinee locates and indicates that he/she would close VC-14-1 and VC-14-2, inform examinee that, "the stem on both valves is all the way down."**

Performance: **SATISFACTORY** _____ **UNSATISFACTORY** _____

Comments: _____

Performance Step: **Critical __X__ (S-1)**	Dispatch Personnel To Locally Close Valves To Isolate RCP Seals: • RCP CC return isolation valves (CC-16-3 and CC-16-2) - CLOSED.
Standard:	CC-16-3 and CC-16-2 CLOSED.
Evaluator Cue:	**When examinee locates and indicates that he/she would close CC-16-3 and CC-16-2, inform examinee that, "the stem on both valves is all the way down."**
Performance:	**SATISFACTORY** _____ **UNSATISFACTORY** _____
Comments:	_____

Terminating Cues:

Stop Time: _____

PITCQ-089	JOB PERFORMANCE MEASURE WORKSHEET	Rev. 5 10/98

TASK TITLE: Cross-Connecting 21 MD AFW Pump To Unit 1

JPM NUMBER: AF-3 Rev. 9

RELATED PRA INFORMATION (SEE PITC 2.3): None

TASK NUMBER: CRO 061.ATI.05

K/A NUMBERS: 2.1.23 061A103 054AA102

APPLICABLE METHOD OF TESTING:

Simulate Performance: ☒ Actual Performance: ☐

Evaluation Location: Turbine Building: ☐ Auxiliary Building: ☐

Simulator: ☐ Control Room: ☒

Other: ☐

Time for Completion: 8 Minutes

TASK APPLICABILITY: (Check all that apply) SRO: ☒ RO: ☒ NLO: ☐

PREPARED BY: Mark Jones **DATE:** 3/20/00

REVIEWED BY: _____ **DATE:** 3/28/00

APPROVED BY: _____ **DATE:** _____

Operator: _____ **(SRO / RO / NLO)**

Evaluator: _____

Date: _____

READ TO THE OPERATOR

I will explain the initial conditions, which step(s) to simulate or discuss, and provide initiating cues. When you complete the task successfully, the objective for this job performance measure will be satisfied.

INITIAL CONDITIONS:

- Unit 2 is in refueling shutdown.
- Unit 1 is in Hot Shutdown with a reactor startup planned.
- 12 MD AFW pump is inoperable.
- 21 MD AFW pump is operable, but not running.
- AFW system is aligned per 1C28.1 checklist.

INITIATING CUES:

- The Unit 2 SS directs you to perform the following:
  - Cross-tie Unit 1 and Unit 2 AFW systems and supply 11 and 12 SGs with AFW from 21 AFW pump per 1C28.1 section 5.7.
  - Maintain direct administrative control over 21 MD AFW pump to meet T.S. 3.4.

JPM PERFORMANCE INFORMATION

Required Materials: None

General References: 1C28.1

Task Standards: 21 MD AFW pump aligned to 11 and 12 steam generators.

Start Time: _____

NOTE: When providing "Evaluator Cues" to the examinee, care must be exercised to avoid prompting the examinee. Typically cues are only provided when the examinee's actions warrant receiving the information (i.e. the examinee looks or asks for the indication).

NOTE: Critical steps are marked with an "X" below the performance step number. Failure to meet the standard for any critical step shall result in failure of this JPM.

Performance Step: **Critical** _____	Place CS-46425, 12 MD AFWP control switch in "PULLOUT".
Standard:	CS-46425 placed in PULLOUT.
Evaluator Cue:	**When examinee indicates that he/she would place CS-46425 in pullout, inform examinee that, "control switch is in pullout."**
Performance:	**SATISFACTORY** _____ **UNSATISFACTORY** _____
Comments:	_____

Performance Step: Place CS-46785, 21 MD AFWP selector switch in "MANUAL".
Critical __X__ **(S-1)**

Standard: CS-46785 placed in MANUAL.

Evaluator Cue: **When examinee indicates that he/she would place CS-46785 in manual, inform examinee that, "control switch is in manual."**

Performance: **SATISFACTORY** _____ **UNSATISFACTORY** _____

Comments: _____

Performance Step: Stop 21 MD AFW Pump, if running.
Critical _____

Standard: 21 MD AFW Pump verified not running.

Evaluator Cue:
- **If asked, inform examinee that, "21 AFW pump is not running per initial conditions."**
- **If examinee indicates that he/she would check the indicating lights on CS-46770 for 21 AFW pump, inform examinee that, "the green light is on and the red light."**

Performance: **SATISFACTORY** _____ **UNSATISFACTORY** _____

Comments: _____

Performance Step: **Critical X (S-1)**	CLOSE 21 MD AFW Pump discharge valves to the Unit 2 steam generators: MV-32383, 21 MD AFWP TO 21 STM GEN, using CS-46840. MV-32384, 21 MD AFWP TO 22 STM GEN, using CS-46841.
Standard:	MV-32383 and MV-32384 CLOSED, by using CS-46840 and CS-46841 respectively; green lights on, red lights off.
Evaluator Cue:	**When examinee indicates that he/she would close MV-32383 and MV-32384, inform examinee that, "MV-32383 and MV-32384 are closed."**
Performance:	**SATISFACTORY** _____ **UNSATISFACTORY** _____
Comments:	_____

Performance Step: **Critical** _____	CLOSE 12 MD AFW Pump discharge valves to the Unit 1 steam generators: MV-32381, 12 MD AFWP TO 11 STM GEN, using CS-46316. MV-32382, 12 MD AFWP TO 12 STM GEN, using CS-46317.
Standard:	MV-32381 and MV-32382 CLOSED, by using CS-46316 and CS-46317 respectively; green lights on, red lights off.
Evaluator Cue:	**When examinee indicates that he/she would close MV-32381 and MV-32382, inform examinee that, "MV-32381 and MV-32382 are closed."**
Performance:	**SATISFACTORY** _____ **UNSATISFACTORY** _____
Comments:	_____

Performance Step: CLOSE AF-13-4, 12 AFWP DISCHARGE.
Critical _____

Standard: Directs outplant operator to CLOSE AF-13-4.

Evaluator Cue: **When directed, acknowledge direction, then report that, "AF-13-4 is closed."**

Performance: **SATISFACTORY** _____ **UNSATISFACTORY** _____

Comments: _____

Performance Step: OPEN the MD AFW pump manual discharge cross-connect valves:
AF-13-1, 12 & 21 MD AFW PMPS DISCH X-CONN.
2AF-13-1, 12 & 21 MD AFW PMPS DISCH X-CONN.
Critical **X** **(S-1)**

Standard: Directs outplant operator to OPEN AF-13-1 and 2AF-13-1.

Evaluator Cue: **When directed, acknowledge direction, then report that, "AF-13-1 and 2AF-13-1 are closed."**

Performance: **SATISFACTORY** _____ **UNSATISFACTORY** _____

Comments: _____

Performance Step: Start 21 MD AFW Pump using CS-46770.
Critical **X** **(S-2)**

Standard: 21 MD AFW Pump started, using CS-46770; red light on, green light off.

Evaluator Cue: **When examinee indicates that he/she would start 21 MD AFW pump, inform examinee that, "21 MD AFW Pump is started."**

Performance: **SATISFACTORY** _____ **UNSATISFACTORY** _____

Comments: _____

Performance Step: **Critical __X__ (S-3)**	Throttle flow as necessary to maintain desired Unit 1 SG level using MV-32381 and MV-32382.
Standard:	Flow established on FI-41227 and FI-41228 by throttling open MV-32381 and MV-32382 using CS-46316 and CS-46317 respectively; red lights on, green lights on (dual indication).
Evaluator Note:	**This is not a critical step if these valves were left open earlier.**
Evaluator Cue:	• **When examinee indicates that he/she would throttle open MV-32381 and MV-32382, while observing flow on FI-41227 and FI-41228, inform examinee that, "MV-32381 and MV-32382 are throttled open and FI-41227 and FI-41228 indicate 100 gpm each."** • **If examinee asks for flow to maintain, inform examinee to, "maintain this flow until SG level response is determined."**
Performance:	**SATISFACTORY _____ UNSATISFACTORY _____**
Comments:	_____

Performance Step: **Critical __X__ (S-3)**	When conditions allow, then post the "12/21 AFW Pumps Cross-Connected" warning sign on each unit's Aux Feedwater Control Panel.
Standard:	12/21 AFW Pump Cross-Connected warning signs located and posted on each unit's AFW control panel.
Evaluator Note:	**Warning signs are located in the RO desk drawer.**
Evaluator Cue:	**When examinee locates the warning signs and indicates where he/she would post them, inform examinee that, "the warning signs are posted.**
Performance:	**SATISFACTORY _____ UNSATISFACTORY _____**
Comments:	_____

Terminating Cues: **When the warning signs are posted, inform examinee that, "this JPM is complete."**

Stop Time: _____

TURNOVER SHEET

INITIAL CONDITIONS:

- Unit 2 is in refueling shutdown.
- Unit 1 is in Hot Shutdown with a reactor startup planned.
- 12 MD AFW pump is inoperable.
- 21 MD AFW pump is operable, but not running.
- AFW system is aligned per 1C28.1 checklist.

INITIATING CUES:

- The Unit 2 SS directs you to perform the following:
  - Cross-tie Unit 1 and Unit 2 AFW systems and supply 11 and 12 SGs with AFW from 21 AFW pump per 1C28.1 section 5.7.
  - Maintain direct administrative control over 21 MD AFW pump to meet T.S. 3.4.

INITIAL SUBMITTAL OF THE SCENARIOS

FOR THE PRAIRIE ISLAND INITIAL EXAMINATION THE WEEK OF MAY 15, 2000

Simulator Exercise Guide

File Number: Att. SRO-00-A **Rev: 0**	**Title: 2000 SRO NRC Exam Evaluation 'A'**
Lesson Plan: P8140S-001	**Duration: 2 hrs**
Author: J. Kempkes	**Approved by: Date:**

OBJECTIVES:

1. Diagnose and respond to a failure of a turbine first stage pressure transmitter per C51 and SWI-O-50.
2. Diagnose and respond to a failure of the Letdown Pressure Control Valve per C47 and C12.1 AOP3.
3. Recognize and respond to a Fuel Cladding Failure and direct a unit shutdown as required by TS 3.1.D.2.a.
4. Perform a load change of >5% power during unit shutdown per 1C1.4.
5. Respond to a feedwater line rupture in containment with a failure of the reactor to trip per E-0 and FR-S.1.
6. Respond to a loss of all feedwater flow requiring bleed and feed cooling per E-0 and FR-H.1.

RELATED LER's, SER's, SOER's, etc.:
None

RELATED PRA INFORMATION (See PITC 2.3):

Initiating Event with Core Damage Frequency:
Loss of MFW (4.4%)

Important Components:
AF - Aux Feewater pumps 11, 12, 21
D2 Emergency Diesel Generator
RP- Reactor Protection system

Important Operator Actions with Task Number:
Establish RCS bleed and feed CRO 3110060601

SCENARIO OVERVIEW

Initial Conditions:

- IC-10 100% power, MOC, equilibrium Xe
- D2 OOS for brush rigging repair
- 12 AFW pump OOS for bearing replacement
- Severe Thunderstorm Warning in effect for southeastern Minnesota
- No power changes planned for upcoming shift

Sequence of Events:

Event 1: Turbine Pressure Channel Failure

- PT-485 fails low
- Rods step in in AUTO until manual control taken
- Response per C51

Event 2: Loss of Letdown

- Pressure transmitter to controller fails high, causing valve to close.
- Loss of Letdown Flow to the VCT responded to with C47 and C12.1 AOP3.
- Excess Letdown established
- Load changes minimized

Event 3: Fuel Element Failure

- Chemistry sample shows DE I-131 of 97 microcuries per gram
- TS required shutdown recognized

Event 4: Power Reduction

- Power is reduced at least 5% for shutdown per 1C1.4.

Event 5: Loss of feed ATWS

- ATWS failure results in loss of secondary inventory
  - Rx trip breakers fail to open automatically or by manual trip from control room (order 0)
  - Turbine fails to trip (order 0), resulting in additional inventory loss until MSIV's are closed
- Heat sink cannot be established, bleed and feed cooling required
  - Order 0 failures of TDAFW pump failure to start, with MDAFW pump already OOS and stuck valve prevents establishment of Unit 1 or Unit 2 AFW to Unit 1.
- Order 0 failure of SI reset pushbuttons prevents starting CD or FW pumps.

PRE-EXERCISE BRIEF

1. Ensure exam security is maintained if this scenario is being done more than once. See appropriate exam security checklists and ensure students understand escorting rules.
2. Prebrief crew using information from NUREG 1021 Rev. 8, App. E part E, Simulator Test Guidelines, or equivalent.

INSTRUCTOR GUIDE

1. Ensure exam security measures for the simulator and simulator doors are in place.

2. Initialize the simulator to IC-10 and perform the following, or use snapshot IC taken during development.

   a. Remove D2 from service by placing its control switch and output breaker in PULLOUT and the breaker selector in MANUAL and attach secure cards. Place "D2 Out of Service" signs on control board.

   b. Place 12 AFW pump control switch in PULLOUT and attach a secure card. Close 12 AFW pump discharge MOV's, open the MCCB's, and attach secure cards. Place selector switch in MANUAL.

   c. Insert Order 0 malfunctions: ***(Relative Order 0)***

      - Failure of reactor trip breakers to open
      - Turbine trip failure

   d. Setup remaining malfunctions on remotes.

3. Prepare the simulator for the examination:

   a. Advance all chart recorders and ensure examiners time/date and initial them.

   b. Ensure all ERCS terminals are functioning normally. Verify rod inputs for "RBU" are correct.

   c. Verify all RPI's and step counters indicate 228 with bank D at 218

   d. Ensure recorder power is ON and alarms are not silenced

   e. Place turnover sheet and copy of LCO log in turnover book.

   f. When examiners are ready, bring applicants in and conduct a normal turnover.

4. Allow a few minutes for the applicants to walk down the control boards. Conduct remaining scenario actions as written when directed by the Lead Examiner.

5. Enter failure of PT-485 low ***(Relative Order 1, Event Trigger #1)***.

   a. Rods will step in until taken to MANUAL.

b. Steam dump to Steam Pressure Mode.

c. Respond as I&C to instrument failure and trip of bistable 1PC-485A (no action to trip required).

d. After about 5 minutes, report bistable is independently verified and a work order has been generated.

e. Allow time for crew to address alarms received.

6. Enter the fuel cladding failure as soon as letdown is isolated in the previous event ***(Relative Order 2, Event Trigger #2)***.

a. 1R-9 will alarm indicating approximately 1 R/hr. This level will not require unit shutdown.

b. Acknowledge all direction for sampling and surveying. Sample results and survey results will not be given until the next event is completed.

c. Continue when crew has directed activities and is waiting for results. Note: Once 1R-9 is confirmed locally, an NUE condition 5A is met.

7. Fail high the letdown low pressure transmitter 1PT-135 to cause the letdown CV-31203 to go closed ***(Relative Order 3, Event Trigger #3)***.

a. Letdown flow will be stopped and the high pressure letdown relief will cycle open to the PRT until the letdown orifice isolation valves or loop isolation valves are shut. The only alarm will be for the relief high temperature alarm.

b. 1HC-135 controller will operate in MANUAL if desired, but there will be no indication of letdown pressure. It is possible to restore letdown flow to 40 gpm, but when contacted the engineer does not recommend operating letdown with the controller in manual and no indication.

c. If directed to investigate locally, report after 5 minutes that you can see no obvious problems with the pressure transmitter 1PT-135.

d. The crew should isolate letdown per C12.1 AOP3 OR normal procedures in C12, then establish excess letdown. The radiation levels previously existing for 1R-9 will not prevent establishing excess letdown, BUT 1R-9 will no longer monitor letdown radiation.

8. Once excess letdown has been establish, call the control room with two reports:

a. Local surveys at the 1R-9 location indicate radiation levels of 1.2 R/hr gamma. Rad protection is conducting a resurvey of the aux building beginning with the CVCS system.

b. The chemist reports that DE I-131 concentration is 97 microcuries per gram, which is over a 1000 times normal. He is continuing to analyze the samples and will bring a full chemistry report to the control room when complete.

c. Based on 1R-9 confirmation, the SS should determine that NUE conditions are met for condition 5a OR direct another SRO to investigate F3-2.

d. Based on DE I-131 of 97 uCi/g, TS 3.1.D.2.a must be recognized met and a shutdown and cooldown <500 degF in six hours required. Fig TS.3.1-3 must be used to determine the need for shutdown.

e. If the Nuclear Engineer, GSPO or SM are contacted for guidance, reply that a shutdown should be commenced immediately per normal procedures.

f. GSPO and resident inspector should be notified of required shutdown.

9. When the SS has directed a shutdown to commence, allow reactor power to be reduced at least 5% before continuing to the next event.

10. Place the camera or ERCS to monitor 12 SG WR level. Enter the feedwater rupture on 11 SG inside containment ***(Relative Order 4, Event Trigger #4)***.

a. The reactor will not trip automatically or manually and the crew will enter E-0 then transition to FR-S.1. IF you are directed to locally trip the reactor, **DO NOT ALLOW THE REACTOR TO TRIP** until BOTH steam generator wide range levels are less than 30%. This ensures there is not excessive delay until bleed and feed cooling is required.

b. The crew should direct local opening of the reactor trip breakers. WHEN wide range levels are <30% AND directed, remove the malfunction for the reactor trip breakers ***(Relative Order 4a)***.

c. When directed to locally trip the turbine AND both SG WR levels are <30%, then remove the turbine trip malfunction ***(Relative Order 4b)***. This ends the depressurization of 12 SG.

d. No AFW pumps will be running as #12 is OOS and #11 fails to start and then trips on overspeed when manually started ***(Relative Order 0, Event Trigger #5)***. If directed to investigate #11, report the overspeed trip mechanism has come off and you cannot get it back together. The TDAFWP will not be restored during this scenario.

e. If directed to cross-connect AFW from Unit 2, perform actions per 1C28.1 section 5.7, requesting Unit 1 to perform actions 5.7.1 and 5.7.5. Ten minutes after being directed to cross connect, report 2AF-13-1 is stuck closed. Efforts to reopen it may be attempted but will not be successful.

f. 11 SG will continue to blow down to containment until empty.

g. Following isolation, the crew will return to E-0 step 2.

11. During E-0:

a. When directed, isolate Unit 1 MSR's and stop turbine building roof exhausters ***(Relative Order 6, Event Trigger #6)***.

b. Transition to FR-H.1 at step 11.

12. During FR-H.1:

a. It is expected that bleed and feed criteria will be met upon entry. If not, feedwater flow will not be established during this scenario (failure of SI reset PB prevents starting condensate/FW pumps) and bleed and feed will be required later.

13. Terminate the scenario at the direction of the Lead Evaluator once adequate bleed path is verified in step 14.

14. Direct the SS to complete PINGP 577 for the highest emergency classification reached. He may ask the board operators for information to help classify, but not receive help making the classification and notification.

15. Escort the applicants during followup and clarification questions. If another group will receive the same scenario, ensure exam security is maintained during the transition between scenarios.

Title: 2000 SRO NRC Exam Evaluation 'A'	File Number: Att. SRO-00-A Rev: 0

Name: _____ Position: SM SS Lead RO

Date: _____

Event Description	KA Number	KA Value
Failure of PT-485 Turbine Impulse Pressure Low	016 A2.01	3.0/3.1

Time	S/U	Position	Expected Response
		Lead/RO	• Identify PT-485 as a failed channel
		RO	• Place rods in MANUAL to stop rod insertion on failure.
		Lead/RO	• Refer to C47011:0405, FW System Trouble; C47013:0305, Auctioneered Tavg/Tref Deviation
		Lead	• Refer to 1C51.2, PT-485 Low Failure –Verify expected plant response – Direct RO to control Tavg at Tref with rods in MANUAL – Place steam dump in steam pressure mode – Verify SG level controlling in AUTO. – No Technical Specifications
		Lead/RO	• Trip bistable 1PC-485A with I&C assistance
		SS	• Brief event

Comments:

Title: 2000 SRO NRC Exam Evaluation 'A'	File Number: Att. SRO-00-A Rev: 0

Event Description	KA Number	KA Value
Fuel Cladding Failure	004 A1.01	2.9/3.8

Time	S/U	Position	Expected Response
		Lead	Respond to High Rad Train B alarm - Verify 1R-9 alarming locally at Train B radiation monitoring panel. – Refer to C47048 1R-09
		Lead/SS	- Direct local survey at letdown monitor location. – Direct sampling of the RCS
Evaluator Note: Sample and survey results will not be received until after the next event is complete.			
Comments:			

Title: 2000 SRO NRC Exam Evaluation 'A'	File Number: Att SRO-00-A Rev: 0

Event Description	KA Number	KA Value
Letdown PCV Fails Closed on Pressure Xmtr Failure Low	004 A2.07	3.4/3.7

Time	S/U	Position	Expected Response
		RO	Respond to alarms for loss of letdown flow (order of ARP's not critical)
		Lead/RO	C47015:0608 Ltdn Relief Line to PRT Hi Temp - Attempt to open CV-31203 (failed closed, will not work) - Monitor PRT level for increase - Monitor VCT level.
		SS/Lead	Diagnose failure closed of CV-31203 and dispatch operator to check
		SS	Recognize entry condition for C12.1 AOP3 and direct transition OR direct securing letdown per C12.1 normal procedures
		RO	Perform actions in C12.1 AOP3 - Verify makeup controller in AUTO. – Verify auto makeup occurring if required. – Close letdown orifice isolation valves (CV-31325, 26 and 27). – Close letdown isolation valves (CV-31226, 31255) - Place charging pumps in MANUAL. – Establish one charging pump running with seal injection at 6-10 gpm per RCP and CV-31198 closed.
		Lead/RO	- Initiate CC flow to the excess letdown heat exchanger.
		Lead/SS	– Check R-9 reading less than 10R/hr.
		Lead/RO	– Establish excess letdown flow to the VCT
		RO	- Stabilize pressurizer level by adjusting CV-31210
		SS	- Minimize load changes
		SS	Conduct event brief

Evaluator Note: There is no direct transition to C12.1AOP3, crew needs to recognize normal letdown is lost due to failure and recognize entry conditions are met.

Comments:

Title: 2000 SRO NRC Exam Evaluation 'A'	File Number: Att. SRO-00-A Rev: 0

Event Description	KA Number	KA Value
Fuel Cladding Failure	004 A1.01	2.9/3.8

Time	S/U	Position	Expected Response
		Lead/SS	Receive results of local radiation survey (1R/hr at 1R-9 location)
		Lead/SS	Receive result of chemistry sample: RCS iodines (97 uCi/g)
		SS	Recognize sample results indicate fuel failure has occurred. -- Notify Nuclear Engineer to implement 5AWI 12.1.1 - Refer to T.S. 3.1.D - Recognize DE I-131 above limit of Fig T.S. 3.1-3 - Direct shutdown of reactor and cooldown to below 500 degF within 6 hours **(critical task)**.
		SS	Consider classification per F3-2 (NUE, EAL reference 5A for sample exceeding TS limits on total activity) by classifying OR directing another SRO to investigate
		Lead/SS	Direct sampling of mixed bed demineralizer influent and effluent.
		Lead/SS	Direct HP's to survey auxiliary building
		SS	Conduct event brief, including shutdown and CVCS limitations
Evaluator Note:			It is not required to do realtime classification and notification; if not done, do as followup question. Critical task is to recognize TS required shutdown.

Comments:

Title: 2000 SRO NRC Exam Evaluation 'A'	File Number: Att SRO-00-A Rev: 0

Event Description	KA Number	KA Value
Loss of Feedwater ATWS	054 AA2.01	4.3/4.4

Time	S/U	Position	Expected Response
		Lead/RO	Feedwater Rupture on 11 SG Inside Containment - FW/Stm mismatch noted - Reactor trip signal on 11 SG Lo Level
		RO	E-0/FR-S.1 Immediate Actions: Verify Reactor Trip - Recognize reactor not tripped - Attempt manual trip (breakers failed)
		Lead/RO	- Attempt DSS trip (circuit failed)
		RO	- Check power >5% and transition to FR-S.1 - Verify automatic rod insertion or manually insert control rods **(critical task)**[1]
		Lead	FR-S.1 Immediate Actions - Verify turbine trip. – Check turbine stop valves closed (open due to failure) - Attempt manual trip of turbine (failed) - Manually close control valves (CV-3 sticks open) - Attempt to manually close both MSIV's (B MSIV sticks open)
		SS	Readthru - E-0 step 1, Verify Reactor Trip - FR-S.1 step 1, Verify Reactor Trip, and 2, Verify Turbine Trip
		SS/Lead	Check AFW pumps running (12 OOS, 11 failed to start) - Attempts to manually start 11 AFWP (trips on start)
		RO	Initiate normal boration of RCS at maximum rate **(critical task)**[1] (Note: since charging is at minimum, must raise charging flow to 20 gpm total to achieve maximum rate with 75% BA flow limit of C12)
		SS/Lead	Dispatch operators to locally trip reactor and turbine

Evaluator Note: [1] Critical task met if negative reactivity inserted using rods or boron prior to exit of FR-S.1

Comments:

Event Description	KA Number	KA Value
FR-S.1 Actions (Continued)		

Time	S/U	Position	Expected Response
		Lead	Check SG levels - Check if >10% (Att E) in one S/G - Verify feed flow >400 gpm - Attempt to align and start AFW pump (direct local investigation)
		Lead	Stop Reactor Makeup Pumps
		Lead/RO	Check for Uncontrolled Cooldown - Check SG pressures (11 is faulted, 12 is isolated when turbine trips) - Check RCS temperature stable or increasing (no, go to step 9)
		Lead	Check MSIV's closed - #12 will not close from control room, may close automatically after SI - May direct local closure
		SS/Lead	Identify 11 SG as faulted (and 12 SG if not isolated and turbine not tripped) - Isolate faulted SG (maintain >40 gpm AFW to each SG if both faulted)
		RO	Check core exit T/C's <1200 degF
		RO	Verify reactor subcritical.
		SS	Return to 1E-0 step 2

Comments:

Event Description	KA Number	KA Value
E-0 Actions	2.4.6	3.1/4.0

Time	S/U	Position	Expected Response
		Lead	Verify turbine trip. (If not tripped locally, verify MSIV's closed)
		Lead	Verify safeguards buses energized.
		RO	Check if SI is actuated
		Lead	Verify safeguards component alignment - SI Not Ready lights not lit w/exceptions - SI Active lights lit w/exceptions - CI lights lit w/exceptions - Cat 1 doors closed
		SS	- Check Ops Log for vent openings
		Lead	- Check cooling water pressure >65 psig
		Lead/RO	Check Main Steamlines Isolated - Check MSIV's closed - If not closed, attempt closure and direct local closure - Check containment instrument air valves closed - If not, close if containment >17 psig
		Lead	Check containment pressure <23 psig - If not, verify containment spray actuation

Comments:

Event Description	KA Number	KA Value
E-0 Actions (continued)		

Time	S/U	Position	Expected Response
		SS	-Announce reactor trip and SI.
			-Notify SEC and Shift Manager
		Lead	Close CC to SFP MV-32115
		SS	Direct establishing continuous communication with the NRC
		Lead	-Open turbine HP drains
			-Notify outplant to stop roof exhausters and perform Att J
		Lead/RO	-Verify SI flow if <2080 psig –Verify RHR flow (not less than 130 psig)
		Lead	Verify AFW flow >200 gpm - Attempt/direct AFW start if not previously done - Transition to FR-H.1

Comments:

Title: 2000 SRO NRC Exam Evaluation 'A'	File Number: Att. SRO-00-A Rev: 0

Event Description	KA Number	KA Value
FR-H.1 Loss of Heat Sink requiring Bleed and Feed	054 AA1.04	4.4/4.5

Time	S/U	Position	Expected Response
		Lead/RO	Check if secondary heat sink is required - RCS pressure above any intact SG pressure - RCS hot leg temperature >350 degF
		Lead/RO	Check for secondary heat sink[1] - Wide Range level in either SG >7% - If not, stop both RCP's and go to step 9 - Przr Pressure <2335 psig - If not, check core dT; if decreasing, stop RCP's and go to step 9
		Lead/RO	Actuate SI
		Lead/RO	Verify RCS feed path - At least one pump running with proper alignment
		Lead	Reset CI
		Lead	Establish instrument air to containment
		RO	Establish RCS bleed path[2] **(critical task)** - Power available to block valves - Both block valves open - Opens both PORV's
		RO	Verify adequate RCS bleed path - PORV's both open - Block valves both open

Evaluator Note: [1] If bleed and feed conditions are not met yet, actions to attempt to restore AFW or MFW will be taken unsuccessfully until they are met per steps 2-8.
[2] Critical task met if both PORV's are opened

Comments:

Simulator Input Summary

Relative Order	System or Panel Drawing	TYPE	CODE	Severity or Value	Event Trigger	TIMING	DESCRIPTION
0		MFS	RP07				MECH FAILURE OF TRIP BKRS
0		IS	CP-1Y0501D	RESET			AMSAC ALARM OFF
0	E1-E27	DI	46447B	ON			AMSAC SWITCH TO BLOCK
0	C1-C22	ANN	M47014:0606B	DISABLE			AMSAC INACTIVE LIGHT OFF
0		MFS	TC11B				AUTO/MAN TURB TRIP FAILURE
0		MFS	FW34				11AFW FAIL TO AUTOSTART
0		MFS	TC04C				CV-3 FAILS OPEN
0	B1-B18	DI	DI-46182	OFF			SI RESET PB FAIL OPEN TRN A
0		DI	46447I	OFF			AMSAC INITIATE DISABLED
0		DI	DI-46159C	OFF			12 MSIV CS FAILS TO CLOSE
0		MFS	FW33		5		AFWP OVERSPEED TRIP
0	EVENT TRIGGER	EVENT ACTION	hwzfws6426		5		ENTER EVENT TRIGGER 5 WHEN 11 TD AFWP STARTED
1		MFS	RX13A	0	1		PT485 FAIL LOW
2		DI	R09:S1P	ON	2		R-9 LEVEL SET TO 1R/HR
3		MFS	VC200	0	3		PRESS FAILS LOW->CONTROLLER SHUTS L/D PCV
4		FW19A	FW19A	100	4		11SG FW LINE BREAK IN CONTAINMENT
4a		MFS	RP07	DELETE			LOCALLY TRIP TURBINE
4b		MFS	TC11B	DELETE			LOCALLY TRIP REACTOR

Relative Order	System or Panel Drawing	TYPE	CODE	Severity or Value	Event Trigger	TIMING	DESCRIPTION
6		RF	MS108	CLOSED	6	+100	ISOLATE MSR'S
6		RF	MS109	CLOSED	6	+200	ISOLATE MSR'S
6		RF	MS110	CLOSED	6	+300	ISOLATE MSR'S
6		RF	MS111	CLOSED	6	+400	ISOLATE MSR'S

Simulator Exercise Guide

File Number: Att. SRO-00-B **Rev: 0**	**Title: 2000 SRO NRC Exam Evaluation 'B'**
Lesson Plan: P8140S-001	**Duration: 2 hrs**
Author: J. Kempkes	**Approved by: Date:**

OBJECTIVES:

1. Swap running condensate pumps per 1C28.2.
2. Diagnose and respond to a SG pressure channel failure high resulting in SG PORV lift per C47 and C51.
3. Recognize and respond to a step change in SG leakage to 1 gpm per C4 AOP2.
4. Diagnose and respond to a faulted/ruptured steam generator per E-0, E-2, E-3 and ECA-3.1.

RELATED LER's, SER's, SOER's, etc.:
None

RELATED PRA INFORMATION (See PITC 2.3):

Initiating Event with Core Damage Frequency:
Steam Generator Tube Rupture (7.1%)

Important Components:
AF - 12 Aux Feedwater pump
D2 Emergency Diesel Generator

Important Operator Actions with Task Number:
Cooldown and depressurize from SGTR after overfill (ECA-3.1)
CRO 301.ATI.20

SCENARIO OVERVIEW

Initial Conditions:

- IC-10 100% power, MOC, equilibrium Xe
- D2 OOS for brush rigging repair
- 12 AFW pump OOS for bearing replacement
- Severe Thunderstorm Warning in effect for southeastern Minnesota
- No power changes planned for upcoming shift

Sequence of Events:

Event 1: Swap Condensate Pumps

- 13 condensate pump is started and 12 condensate pump stopped per 1C28.2.

Event 2: SG Pressure Channel Failure

- 1P-468 fails high.
- 11 SG PORV opens in AUTO and must be closed in MANUAL to prevent overpower.
- Associated bistables are tripped.

Event 3: SG Tube Leak

- R-15 alarms on 1 gpm primary to secondary leakage.
- C4AOP2 section 2.7 is entered, which requires a plant shutdown to be initiated within 1 hour.

Event 4: SGTR with Stuck Open Safety Valve

- Upon the reactor trip OR when RCS pressure is stabilized, a 500 gpm tube rupture coincident with a failure open of a SG safety valve occurs. If a reactor trip has not already occurred, it will be required. SI will be required based on pressurizer pressure and/or level.
- Train A SI will not actuate due to preexisting malfunctions. Train A CI must be manually actuated. The Order 0 failure of 12 CC pump not starting in auto will result in no CC flow until 12 CC is manually started or Train B SI is manually actuated.
- Actions are taken to cooldown and depressurize the RCS using E-0, E-2, E-3 and ECA-3.1.

PRE-EXERCISE BRIEF

1. Ensure exam security is maintained if this scenario is being done more than once. See appropriate exam security checklists and ensure students understand escorting rules.
2. Prebrief crew using information from NUREG 1021 Rev. 8, App. E part E, Simulator Test Guidelines, or equivalent.

INSTRUCTOR GUIDE

1. Ensure exam security measures for the simulator and simulator doors are in place.

2. Initialize the simulator to IC-10 and perform the following, or use IC-__.

   a. Remove D2 from service by placing its control switch and output breaker in PULLOUT and the breaker selector in MANUAL and attach secure cards. Place "D2 Out of Service" signs on control board.

   b. Place 12 AFW pump control switch in PULLOUT and attach a secure card. Close 12 AFW pump discharge MOV's, open the MCCB's, and attach secure cards.

   c. Ensure 11 CC pump is the running pump.

   d. Place a marked up copy of C4 AOP2 on the turnover book with actions for Increased Monitoring level completed. Ensure ERCS graph SGLEAK2 is up with appropriate conversion constant to show a 10 gpd tube leak after the malfunctions below are entered and R-15 counts stabilize.

   e. Insert Order 0 malfunctions: ***(Relative Order 0)***

      - 10 gpd tube leak
      - Failure of reactor trip breakers to open
      - Turbine trip failure

   f. Insert remaining malfunctions on remotes.

3. Prepare the simulator for the examination:

   a. Advance all chart recorders and ensure examiners time/date and initial them.
   b. Ensure all ERCS terminals are functioning normally.
   c. Verify all RPI's and step counters indicate 228 with bank D at 218
   d. Ensure recorder power is ON and alarms are not silenced.
   e. Place turnover sheet and copy of LCO log in turnover book.
   f. When examiners are ready, bring applicants in and conduct a normal turnover.

4. Allow a few minutes for the applicants to walk down the control boards. Conduct remaining scenario actions as written when directed by the Lead Examiner.

5. Allow the crew to swap running condensate pumps per 1C28.2. If progress is not being made after turnover, prompt the crew by calling as the system engineer.

6. Enter the failure of 11 SG pressure channel 1P-468 High ***(Relative Order 1, Event Trigger #1)***.

   a. 11 SG PORV will open in AUTO and has to be closed in manual to prevent reactor power from exceeding license limits.
   b. Crew will respond per C51.
   c. Trip bistables as I&C when directed ***(Relative Order 1a)***.

7. Enter the 1 GPM SG tube leak ***(Relative Order 2, Event Trigger #2)***.

   a. Initial indication will be rapidly increasing R-15 radiation and estimated leakrate on ERCS QP SGLEAK2.
   b. The crew should go to section 2.7 based on step 2.4.12.A, which is a continuous action step.
   c. Step 2.7.3 directs the crew to initiate action within 1 hour to place the unit in HSD and to be in HSD in the next 6 hours. Once the SRO has directed actions to begin preparing for shutdown, the scenario may continue.

8. Enter the 11 SG Tube Rupture with Stuck Open Safety Valve ***(Relative Order 3, Event Trigger #3)***.

   a. Reactor trip/Safety Injection on pressurizer pressure or manual.
   b. Train A ESF actuations must be done manually due to failure of Train A SI logic. All actions can be completed from the control room except the 11/13 FCU bypasses ***(Relative Order 4, Event Trigger #4)***.
   c. IF directed to attempt to close safety valve, it will not be possible to gag it closed during the scenario.
   d. When directed, isolate Unit 1 MSR's and turn off turbine building roof exhausters ***(Relative Order 5, Event Trigger #5)***.

9. Terminate the scenario when directed by the lead examiner after transition to ECA-3.1.

10. Direct the SS to complete PINGP 577 for the highest emergency classification reached. He may ask the board operators for information to help classify, but not receive help making the classification and notification.

11. Escort the applicants during followup and clarification questions. If another group will receive the same scenario, ensure exam security is maintained during the transition between scenarios.

Title: 2000 SRO NRC Exam Evaluation 'B'	File Number: Att. SRO-00-B Rev: 0

Name: _____ Position: SM SS Lead RO

Date: _____

Event Description	KA Number	KA Value
Swap Running Condensate Pumps	056 A2.04	2.6/2.8

Time	S/U	Position	Expected Response
		Lead/TBO	Verify local conditions (steps 5.6.1-5.6.4)
		Lead	Start 13 condensate pump. – Place CS-46437 in MANUAL - Place CS-46412 in START and verify pump starts.
		Lead/TBO	Perform post-start checks (steps 5.6.6-5.6.9)
		Lead	Verify condensate header pressure approx. 440 psig.
		Lead	Stop 12 condensate pump. – Stop with CS-46411
		Lead	Place 13 condensate pump in standby with CS-46437.

Comments:

Title: 2000 SRO NRC Exam Evaluation 'B'	File Number: Att. SRO-00-B Rev: 0

Event Description	KA Number	KA Value
SG Pressure Channel Failure High	035 A2.03	3.4/3.6

Time	S/U	Position	Expected Response
		Lead	Address FW Trouble Alarm 47011:0405 - Verify SG level controlling properly in AUTO. – Refer to 1C51 for 1P-468 failed high. – Increase monitoring of SGWLC. – Contact I&C and system engineer.
		Lead/RO	C51 Actions - Take manual control of 11 SG PORV and ensure closed. [1] ***critical task*** – Verify SGWLC operating properly in AUTO.
		SS	Determine 6 hr LCO until B/S tripped per TS Table3.5-2.b
		RO/Lead	Trip bistables 1PC-468A and 468B
		Lead/SS	Ensure work order is initiated on failed instrument.
		SS	Consider impact on calorimetric program

Evaluator Note: [1] Required to close PORV to limit reactor power to ≤102% ***critical task***

Comments:

Event Description	KA Number	KA Value
Steam Generator Tube Leak	037 AA2.06	4.3/4.5

Time	S/U	Position	Expected Response
		Lead	Radiation Monitor Train B alarm - Verify 1R-15 alarming at radiation monitoring panel - Refer to 47048 1R-15 alarm response
		Lead/TBO	Verify AR-8-2 Open and AR-8-1 closed.
		Lead/SS	Direct rad protection to obtain grab sample of Unit 1 air ejector.
		Lead/RO	Check steam line rad monitors (note- no N-16 monitors at PI)
		Lead/RO	Check SG blowdown monitor 1R-19
		SS	Consider classification per F3-2.
		Lead/SS	Direct chemist to sample and determine leak rate.
		SS	Refer to TS 3.4.D and 3.1.C for LCO's
		Lead/SS	Direct HP's to sample turbine building sump for activity
		Lead	Refer to 1C4 AOP2 Steam Generator Tube Leak

Comments:

Event Description	KA Number	KA Value
Steam Generator Tube Leak (continued)		

Time	S/U	Position	Expected Response
		Lead/SS	C4 AOP2 Steam Generator Tube Leak - Continuously monitor 1R-15 and 1R-19 on ERCS. - Transition to section 2.7 on 1R-15 count increase >500 cpm.
		RO	Trip reactor and go to E-0 if RCS inventory cannot be maintained
		SS	Initiate action to be in Hot Shutdown within 1 hour per step 2.7.4. and TS 3.1.C.2.e ***(critical task)***[1]
		SS/Lead	Direct duty chemist to sample every 30 minutes.
		SS	Consider classification per F3-2 (NUE if recognize >150 gpd per 4A, may be delegated to another SRO)
		Lead	Perfom actions in section 2.4.
		SS/Lead	Direct implementation of Att. A.
		SS	Review plant resources (may be delegated)
		Lead/SS	Make appropriate log entries
		SS	Notify GSPO/Resident of entry into this AOP

Evaluator Note: [1] Action directed to place plant in hot shutdown within 1 hour required to meet critical task. Do not insert SGTR until this task is met or one hour has expired from entry into section 2.7.

Comments:

Title: **2000 SRO NRC Exam Evaluation 'B'**	File Number: Att. SRO-00-B Rev. 0

Event Description	KA Number	KA Value
Steam Generator Tube Rupture with Stuck Open SG Safety	038 EA 2.07	4.4/4.8

Time	S/U	Position	Expected Response
		RO	Recognize RCS inventory cannot be maintained. – Isolate letdown - Maximize charging flow - Initiate manual reactor trip or verify automatic reactor trip.
			E-0 Immediate Actions
		RO	Verify reactor trip.
		Lead	Verify turbine trip
		Lead	Verify safeguards buses energized.
		RO	Check if SI has actuated. – If not, check if SI required (likely on low pressurizer level or low pressure) - If recognize SI has only actuated on Train B, attempt manual SI

Comments:

Title: 2000 SRO NRC Exam Evaluation 'B'	File Number: Att. SRO-00-B Rev: 0

Event Description	KA Number	KA Value
E-0 Reactor Trip or Safety Injection	007 EA2.06	4.3/4.5

Time	S/U	Position	Expected Response
			E-0 Reactor Trip and Safety Injection
		RO	-Trip the reactor
		Lead	-Verify turbine tripped.
		Lead	-Verify safeguards buses energized
		RO	-Actuate SI due to inability to maintain pressurizer level above 5%.
		Lead	-Verify component alignment.
		Lead	-Check CL pressures >65 psig.
		SS	-Announce Rx trip and SI, notify SEC.
		Lead	-Close MV-32115.
		SS	-Ensure communication with NRC is established within 1 hour.
		Lead	-Open turbine HP drains.
		Lead	-Direct outplant to stop the TB roof exhausters and isolate the MSR's per Att. J.
		Lead	-Verify >200 gpm total AFW flow & AFW pump pressure >900 psig.
		Lead/SS	-Implement Auto Action guide, Table E0-1 (direct extra operator).
		Lead	-Place steam dump in "Steam Pressure" mode.
		SS	-Diagnose faulted SG and transition to E-2.

Comments:

Title: 2000 SRO NRC Exam Evaluation 'B'	File Number: Att. SRO-00-B Rev: 0

Event Description	KA Number	KA Value
E-2 Faulted SG Isolation	040 AA2.01	4.2/4.7

Time	S/U	Position	Expected Response
		Lead/RO	Verify 11 MSIV closed.
		SS	Determine 12 SG intact, 11 SG faulted.
		Lead	Isolate faulted SG. – MFRV's and FW containment isolation valve - AFW flow stopped to 11 SG - Steam supply from 11 SG to 11 AFWP closed - 11 SG PORV closed - SGB isolation valves closed
		Lead	Check CST level
		RO/Lead SS/Lead RO/Lead	Check Secondary Radiation - Initiate samples of SG's with chemist - Check secondary radiation normal
		SS	Transition to E-3 based on abnormal secondary radiation

Comments:

Title: **2000 SRO NRC Exam Evaluation 'B'**	File Number: Att. SRO-00-B Rev: 0

Event Description	KA Number	KA Value
E-3 Steam Generator Tube Rupture	038 EA1.36	4.3/4.5

Time	S/U	Position	Expected Response
			E-3
		SS	Identify 11 SG as ruptured.
		Lead	Verify flow isolated from 11 SG.
		SS/Lead	Maintain feed flow isolate to 11 SG
		RO	Check PORVs and block valves closed
		SS	Identify 11 SG as faulted and already isolated
		Lead	Maintain AFW >200gpm to 12 S/G until NR>10%
		Lead	Reset SI and CI, verify instrument air to containment
		Lead	Check safeguard buses from offsite power
		Lead	Check ruptured SG pressure >250 psig [1]
		Lead	Initiate RCS cooldown ***(Critical Task)***[2]
		SS	-Determine required CETC temperature.
		Lead	-Cooldown at max rate using condenser dump or 12 SG PORV.
		Lead	Maintain CETC temperature once desired value is attained.
		Lead	Stop RHR pumps
		RO	Establish maximum charging flow.
		SS	Transition to ECA-3.1 on ruptured SG pressure within 250 psig of intact SG.

Evaluator Note: [1] If transition to ECA-3.1 is met at this step, scenario should continue until cooldown is begun in ECA-2.1. The faulted/ruptured SG may reach <250 psig depending on crew response time.
[2] Critical task is met when RCS cooldown is initiated per E-3 or ECA-3.1.

Comments:

Simulator Input Summary

Relative Order	System or Panel Drawing	TYPE	CODE	Severity or Value	Event Trigger		TIMING	DESCRIPTION
0		MFS	RP08A					FAILURE AUTO TRN A SI
0		MFS	CC02B					12 CC PUMP FAILS TO START IN AUTO
0		MFS	RD06L					SDB ROD K-9 STUCK
1		SO	RX213	1400	1			SG PRESSURE PT-468 FAILS HIGH
1A		RF	RP114	TRIP				B/S TRIPS PER C51 PC-468A
1A		RF	RP127	TRIP				PC-468B
2		MFS	SG01A	2	2			1 GPM SG TUBE LEAK
3		MFS	SG02A	10	3			500 GPM SG TUBE RUPTURE (ON RX TRIP)
3		MFS	MS07A	100	3			11 SG SAFETY FAILS OPEN
4		RF	CL105	OPEN	4			FCU BYPASS VALVES
5		RF	MS108	CLOSED	5		+100	ISOLATE MSR'S
		RF	MS109	CLOSED	5		+200	
		RF	MS110	CLOSED	5		+300	
		RF	MS111	CLOSED	5		+400	

Simulator Exercise Guide

File Number: Att. SRO-00-C Rev: 0	Title: 2000 SRO NRC Exam Evaluation 'C'
Lesson Plan: P8140S-001	Duration: 2 hrs
Author: J. Kempkes	Approved by: Date:

OBJECTIVES:

1. Swap running charging pumps per 1C12.1.
2. Diagnose and respond to an RCS Tcold failure per C47 and C51.
3. Diagnose and respond to a charging line break in containment per C47, C4 AOP1 and C12.1 AOP2.
4. Recognize and respond to an inadvertent SI and a failure of the reactor trip breakers by actuating DSS per E-0.
5. Respond to a Loss of All Offsite AC Power with failure of Unit 1 DG's to automatically start per ECA-0.0.
6. Respond to a leaking pressurizer safety valve and failed RCS seals per E-0, ES-0.2 and E-1.

RELATED LER's, SER's, SOER's, etc.:
None

RELATED PRA INFORMATION (See PITC 2.3):

Initiating Event with Core Damage Frequency:
Loss of Offsite Power (34.2%)

Important Components:
D1 EDG
Reactor Protection

Important Operator Actions with Task Number:

SCENARIO OVERVIEW

Initial Conditions:

- D1 OOS for fuel injector replacement (OOS 2 hr, ETR 8 hr)
- Winter Storm Watch in effect, expect severe icing
- 100% power, MOL

Sequence of Events:

Event 1: Swap Running Charging Pumps

- Turnover requires swap from 11 to 12 charging pump to equalize run times.
- Swap performed per 1C12.1.

Event 2: Tcold RTD fails high

- Charging goes to max speed in AUTO and rods insert in AUTO.
- Response per C47 and C51.

Event 3: Charging Line Break in Containment

- Seal injection flow drops to 0 as all charging flow is diverted to break.
- Letdown flashing occurs and letdown must be isolated.
- Diagnosis and isolation requires closing the charging line FCV, limiting charging availability to seal injection flow.
- RCS leakage exceeds TS limits for unidentified until located and isolated (CVCS not part of RCS TS).
- Excess letdown is placed in service per C12.1 AOP2.

Event 4: Spurious SI Train B

- Results in a loss of all FW (lockout of FW/CD pumps) and reactor trip signal.
- Preexisting failures require manual reactor trip using the Diverse Scram System and manual start of D2 and 12 SI pump. One turbine stop valve will fail to close, requiring verification of CV closure.
- SI manually initiated for train A at step 4 of E-0.

Event 5: Loss of All AC Power

- Upon actuation of SI, all offsite and onsite power is lost and one safety starts leaking by.
- Power to Train B components is restored by manual start and loading of D2 in ECA-0.0, then transition back to E-0 step 4.

- Loss of power ensures charging pump cannot be started without isolating seal injection once power is restored, resulting in a loss of all charging.

Event 6: Pressurizer Safety Valve Leakage/Failed RCP Seals

- Relief valve leakage goes to maximum 30 seconds after power is restored.
- PRT rupture disk will eventually blow, but diagnosis is complicated until then by normal containment conditions.
- Leakage from pressurizer safety and degraded RCS seals is not significant enough to prevent SI termination. One SI pump will have to be restarted to maintain subcooling after termination.
- Scenario ends upon E-1 transition OR when crew concludes SI pump must be started eventually to maintain subcooling or pressurizer level.

PRE-EXERCISE BRIEF

1. Ensure exam security is maintained if this scenario is being done more than once. See appropriate exam security checklists and ensure students understand escorting rules.
2. Prebrief crew using information from NUREG 1021 Rev. 8, App. E part E, Simulator Test Guidelines, or equivalent.

INSTRUCTOR GUIDE

1. Ensure exam security measures for the simulator and simulator doors are in place.

2. Initialize the simulator to IC-10 and perform the following, or use saved snapshot.

   a. Remove D1 from service by placing its control switch and output breaker in PULLOUT and the breaker selector in MANUAL and attach secure cards. Place "D1 Out of Service" signs on control board.

   b. Insert Order 0 malfunctions: ***(Relative Order 0)***

      - 10 gpd tube leak
      - Failure of reactor trip breakers to open
      - D2 and 12 SI Pump Auto Start failures
      - 11 Charging Pump Overload

   c. Insert remaining malfunctions on remote triggers.

3. Prepare the simulator for the examination:

   a. Advance all chart recorders and ensure examiners time/date and initial them.
   b. Ensure all ERCS terminals are functioning normally.
   c. Verify all RPI's and step counters indicate 228 with bank D at 218
   d. Ensure recorder power is ON and alarms are not silenced
   e. Place turnover sheet and copy of LCO log in turnover book.
   f. When examiners are ready, bring applicants in and conduct a normal turnover.

4. Allow a few minutes for the applicants to walk down the control boards. Conduct remaining scenario actions as written when directed by the Lead Examiner.

5. Allow the crew to swap from 11 to 12 charging pumps running per 1C12.1. If after several minutes the swap is not discussed, call as the aux building operator and report you are standing by for the swap.

6. Enter the Loop B Tcold failure high malfunction ***(Relative Order 1, Event Trigger #1)***.

   a. Trip bistables as directed ***(Relative Order 1a)***.

   b. Five minutes after being directed, report IV complete and WO being written.

7. Enter the break in the charging line in containment ***(Relative Order 2, Event Trigger #2)***.

   a. Initial indications are a loss of seal injection flow and letdown flashing.

   b. Crew response per C47, which directs crew to C12.1 AOP1, Loss of RCP seal injection. Seal flow cannot be restored without stopping charging flow to the regen heat exchanger, but may be done as part of diagnosis or initial response.

   c. Crew may isolate letdown due to flashing.

   d. Crew may also enter C4 AOP1 on indications of RCS leakage (LEAK program shows approx. 30 gpm if used).

   e. C12.1 AOP1 directs actions if crew identifies source of leakage. If dianosis is not yet made, C4 AOP1 actions to identify leak location will reduce charging to minimum and shut the charging line FCV.

   f. If directed to investigate for leakage, report after 5 minutes there is no obvious leakage in the aux building CVCS lines.

   g. If directed to check sump run times, report Containment Sump A pump is running.

   h. If contacted as system engineer, report you will put together an entry team to investigate the charging line break. No entry will be made during this scenario. You will also write a work order.

   i. Excess letdown will be placed in service.

   j. Continue on lead examiner direction.

8. Enter the spurious Train B SI Actuation ***(Relative Order 3, Event Trigger #3)***.

   a. AMSAC/DSS will need to be used for the reactor trip. When directed, open the trip breakers locally by clearing the RTB malfunction ***(Relative Order 3a)***.

9. WHEN the reactor has been verified tripped during the SS readthru, enter the leaking pressurizer safety valve and loss of all offsite power ***(Relative Order 4, Event Trigger #4)***.

   a. The crew should transition to ECA-0.0 per step 3 of E-0 to restore power.

   b. D2 is manually started in ECA-0.0 step 5, allowing power to be restored to Bus 16 and a transition back to E-0.

10. WHEN E-0 is reentered, enter the increased leakage of the pressurizer safety valve RC-10-1 ***(Relative Order 5, Event Trigger #5)***.

    a. Isolate MSR's when directed ***(Relative Order 6, Event Trigger #6)***.

11. At E-0 diagnosis steps, no accident diagnosis is expected since RCS leakage via the RCP seals and pressurizer safety does not result in containment abnormal conditions. The crew will meet SI termination criteria and transition to ES-0.2.

12. SI pumps are stopped in ES-0.2. Charging flow cannot be established. In order to maintain inventory and subcooling, an SI pump must be used by the information page (SI reinitiation criteria) and transition made back to E-1.

13. Terminate the scenario at the discretion of the lead examiner after SI reinitiation OR when crew has discussed how SI will be required.

14. Direct the SS to complete PINGP 577 for the highest emergency classification reached. He may ask the board operators for information to help classify, but not receive help making the classification and notification.

Title: 2000 SRO NRC Exam Evaluation 'C'	File Number: Att. SRO-00-C Rev: 0

Name: _____ Position: SM SS Lead RO

Date: _____

Event Description	KA Number	KA Value
Swap Running Charging Pumps	004 A4.08	3.8/3.4

Time	S/U	Position	Expected Response
		RO	Swap charging pumps per section 5.2 of C12.1 -Verify desurger pressurized -Transfer 11 charging pump to MANUAL, verify 12 at minimum. -Reduce 11 speed to get ~6gpm seal injection -Verify discharge pressure <2400# -Start 12 charging pump -Adjust speeds maintaining seals 6-10 gpm until 11 pump at minimum speed -Adjust 12 pump to achieve 9.5 gpm seal injection -Stop 11 charging pump -Adjust for 8 gpm seal injection -Place 12 pump in AUTO. -Over time, zero out bias in charging pump controller

Comments:

Event Description	KA Number	KA Value
Tcold Thermocouple Failed High	016 A2.01	3.0/3.1

Time	S/U	Position	Expected Response
		Lead RO RO RO RO RO RO RO Lead/SS	C51.1 T_{AVG} Loop 1B 1T-401 - High • Place rod control in MANUAL and maintain T_{AVG} at T_{REF}. • Place charging pump in MANUAL and maintain pressurizer level. • Select Red channel on T_{AVG} defeat switch and pull out. • Return rod control to AUTO. • Return charging pump speed to AUTO. • Refer to T.S.3.5 (6 hr LCO for B/S tripping). • Trip and independently verify bistables. • Initiate work order on the failed channel. Make appropriate log entries.
Comments:			

Event Description	KA Number	KA Value
Charging Line Break in Containment	004 A3.14	3.4/3.1

Time	S/U	Position	Expected Response
		Lead	11/12 RCP Lab Seal Lo dP
		RO	-Verify pressure low.
		RO	-Attempt to increase seal injection flow[1]
		Lead/SS	-Refer to C12.1 AOP1
		Lead	Regen HX Letdown Hi Temp
			-Verify temperature high
			-Balance letdown and charging
		RO	Isolate letdown due to flashing
		Lead	C12.1 AOP1, Loss of RCP seal injection
		RO	-Place 12 charging pump speed in MANUAL.
			-Reduce speed while closing CV-31198 until closed with 8 gpm seal injection
		Lead/SS	C12.1 AOP2, Loss of Chg to Regen HX
		RO	-Verify RMU in auto, making up to VCT if required
			-Isolate letdown or verify isolated
			-Verify 1 charging pump running at minimum speed.
			-Initiate excess letdown flow.
		SS	Minimize load changes
		Lead/SS	Make appropriate log entries.

Evaluator Note: [1] It may occur that the break is isolated as the RO attempts to raise seal injection. If this is the case, the crew should diagnose the break location and proceed.

Comments:

Title: 2000 SRO NRC Exam Evaluation 'C'	File Number: Att. SRO-00-C Rev: 0

Event Description	KA Number	KA Value
Spurious SI Actuation- Immediate Actions	029 EA 2.09	4.4/4.5

Time	S/U	Position	Expected Response
		Lead/RO	Recognize need for reactor trip/ failure of RTB's to open -Attempt manual reactor trip using both CB switches -Trip reactor using DSS manual initiation
		RO	Verify reactor trip -RTB's closed- dispatch operator to locally open -Power decreasing, rods at bottom
		Lead	Verify turbine trip -1/2 stop valves fails to close, verify all CV's closed
		Lead	Verify safeguard buses energized
		RO	Recognize SI has actuated
		Lead	Report immediate actions completed
Evaluator Note: Local opening of trip breakers may not be directed until later.			

Comments:

Event Description	KA Number	KA Value
E-0 Readthru		

Time	S/U	Position	Expected Response
			E-0 Actions
		RO	-Verify reactor trip/ direct manual opening of RTB's
		Lead	-Verify turbine trip
		Lead	-Safeguard buses energized
		RO	-SI actuated
		Lead	-Verify safeguards alignment
		Lead/RO	*Recognize only Train B actuated and manually initiate SI
		SS/Lead	Recognize loss of all AC power and transition to ECA-0.0
Evaluator Note: Loss of AC is entered on manual SI. If SI is not actuated, enter when components are being manually aligned in Step 5.			

Comments:

Event Description	KA Number	KA Value
Loss of All AC- Recovery by D2 Manual Start	055 EA 1.02	4.3/4.4

Time	S/U	Position	Expected Response
			ECA-0.0 Action
		RO	-Isolate RCS, close excess letdown isolation ***(critical task)*** CV-31330
		Lead/RO	-Verify AFW flow >200 gpm
		SS	-Announce trip, notify SM/SEC/NRC
		Lead	-Verify cooling water pressure >25 psig
		Lead	Restore power to bus 16 ***(critical task)***
			-Check load rejection lights lit
			-Manually start D2 (will automatically load on bus)
		SS	Return to E-0 step 3
Evaluator Note:			Critical task met if power is restored to one safeguards bus before SG depressurization is required in ECA-0.0

Comments:

Title: 2000 SRO NRC Exam Evaluation 'C'	File Number: Att. SRO-00-C Rev: 0

Event Description	KA Number	KA Value

Time	S/U	Position	Expected Response
			E-0 Reactor Trip and Safety Injection
		Lead	-Verify component alignment.
		Lead	*Manually start 12 SI pump ***(critical task)***[1]
			-Check CL pressures >65 psig.
		SS	-Announce Rx trip and SI, notify SEC.
		Lead	-Close MV-32115.
		SS	-Ensure communication with NRC is established within 1 hour.
		Lead	-Open turbine HP drains.
		Lead	-Direct outplant to stop the TB roof exhausters and isolate the MSR's per Att. J.
		Lead	-Verify >200 gpm total AFW flow & AFW pump pressure >900 psig.
		Lead/SS	-Implement Auto Action guide, Table E0-1 (direct extra operator).
		Lead	-Place steam dump in "Steam Pressure" mode.
		SS	-No accident diagnosis criteria met, transition to ES-0.2.
Evaluator Note: [1] Critical task met if SI pump started before transition to FR-C.1 or FR-C.2 required.			
Comments:			

Title: 2000 SRO NRC Exam Evaluation 'C'	File Number: Att. SRO-00-C Rev. 0

Event Description	KA Number	KA Value
SI Termination	E02 EA2.1	3.3/4.2

Time	S/U	Position	Expected Response
		Lead	Reset SI[1], CI, establish instrument air
		RO/Lead	Reset AMSAC/DSS
		RO	Recognize charging flow not available -No pumps running, CC to RCP's lost so must isolate seals -Charging line rupture isolated for other path
		Lead	Stop RHR, SI pumps and close BAST suction valve
		SS/RO	Verify SI flow not required
		SS	Recognize makeup not available, manually start OR discuss need to start an SI pump and transition to E-1 to maintain pressurizer level and subcooling per information page [2] ***(critical task)***
Evaluator Note:			[1]IF trip breakers have not been locally opened, SI will re-initiate when reset pushbuttons are released. [2]Critical task met if 12 SI pump started OR SS determines SI pump start will eventually be necessary. It is not necessary to wait until SI reinitiation criteria are met.
Comments:			

Simulator Input Summary

Relative Order	System or Panel Drawing	TYPE	CODE	Severity or Value	Event Trigger	TIMING	DESCRIPTION
0		MFS	DG07B				D2 AUTO START FAILURE
0		MFS	TC01A				TURB STOP VALVE CV-31182 FAILS TO CLOSE
0		MFS	SI05B				12 SI PUMP AUTO START FAILURE
0		MFS	RP07				MECH FAILURE OF RX TRIP BREAKERS
1		MFS	RX07D		1		LOOP B THOT TRANSMITTER FAILS HIGH
1A	RP03B		TC-405A	TRIP			B/S TRIPS PER C51
			TC-405B	TRIP			
			TC-405C	TRIP			
			TC-405D	TRIP			
			TC-401A	TRIP			
			TC-401D	TRIP			
			TC-401F	TRIP			
2		MFS	VC11	100	2	0-2 min	CHARGING LINE BREAK IN CONTAINMENT
3		MFS	RP04B		3		SPURIOUS ACTUATION OF TRAIN B SAFETY INJECTION
3A		MFS	RP07	DELETE			LOCAL REACTOR TRIP WHEN DIRECTED
4		MFS	RC19A	50	4	3	PZR SAFETY RC-10-1 LEAKAGE TO 50 GPM/3 MIN
4		MFS	ED14		4		LOSS OF ALL OFFSITE POWER

Relative Order	System or Panel Drawing	TYPE	CODE	Severity or Value	Event Trigger	TIMING	DESCRIPTION
5		MFS	RC19A	100	5		PZR SAFETY RC-10-1 FAILS OPEN
6		RF	MS108	CLOSE	6	+100	ISOLATE MSR'S
			MS109	CLOSE	6	+200	
			MS110	CLOSE	6	+300	
			MS111	CLOSE	6	+400	

Simulator Exercise Guide

File Number: Att. SRO-00-D **Rev: 0**	**Title: 2000 SRO NRC Exam Evaluation 'D'**
Lesson Plan: P8140S-001	**Duration: 2 hrs**
Author: J. Kempkes	**Approved by: Date:**

OBJECTIVES:

1. Reduce power and remove 12 MFP from service per 1C1.4.
2. Diagnose and respond to a failure of controlling pressurizer pressure channel high per C47 and C51.
3. Diagnose and respond to a leak in the Letdown Heat Exchanger to Component Cooling per 1C4 AOP1 and 1C14 AOP2.
4. Diagnose and respond to a faulted steam generator in containment per E-0 and E-2.
5. Restore safeguards power to Bus 15 via the Bus Tie Breakers from Bus 25 per ECA-0.0.
6. Recognize a loss of heat sink and restore using 21 AFW pump per FR-H.1.

RELATED LER's, SER's, SOER's, etc.:
None

RELATED PRA INFORMATION (See PITC 2.3):

Initiating Event with Core Damage Frequency:
Loss of MFW and AFW (4.4%)

Important Components:
11 AFW pump
D1 and D2 Emergency Diesel Generators
4160V Buses 15, 16
Bus 16 Load Sequencer

Important Operator Actions with Task Number:
Cross-tie 4KV buses during station blackout CRO 0000550501

SCENARIO OVERVIEW

Initial Conditions:

- D1 OOS for fuel injector replacement (OOS 2 hr, ETR 8 hr)
- 11 charging pump OOS for packing replacement (OOS 1 hr, ETR 2 hr)
- Severe ice storm warning in effect for SE Minnesota
- Contaminants found in 12 MFP oil, reducing power to stop pump and replace oil.

Sequence of Events:

Event 1: Remove MFP from service

- Continue power decrease from 62% to 55% power and stop 12 MFP and one condensate pump per 1C1.4.

Event 2: Pressurizer Pressure Channel Failure

- Response per C47 and C51. Prompt action is required to prevent an automatic reactor trip.
- T.S. entry on DNB parameters and failed instrument.

Event 3: Letdown HX Leak

- CC surge tank level increases and 1R-39 alarms on inleakage.
- Response per C47, 1C4 AOP1 and 1C14 AOP2.
- Letdown heat exchanger is isolated and excess letdown placed in service.

Event 4: Faulted SG

- 11 SG faults to containment, resulting in a reactor trip and safety injection.
- Diagnosis and isolation of the faulted SG will occur after the next two events are dealt with.

Event 5: Loss of All AC Power

- Upon SI from Event 4, 1R supply is lost due to a lockout of switchyard 161KV bus.
- CT-11 transformer locks out 60 seconds later.
- D1 is OOS and Bus 16 locks out.
- Power is restored on the U-2 bus tie to Bus 15.

Event 6: Loss of All FW

- 11 TD AFW pump trips on manual start and will not restart. 12 AFW pump does not have power as Bus 16 is locked out.
- 21 AFW pump is used in 1FR-H.1 to restore heat sink.

PRE-EXERCISE BRIEF

1. Ensure exam security is maintained if this scenario is being done more than once. See appropriate exam security checklists and ensure students understand escorting rules.
2. Prebrief crew using information from NUREG 1021 Rev. 8, App. E part E, Simulator Test Guidelines, or equivalent.

INSTRUCTOR GUIDE

1. Ensure exam security measures for the simulator and simulator doors are in place.

2. Initialize the simulator to IC-25 and perform the following, or use presnapped IC.

   a. Remove D1 from service by placing its control switch and output breaker in PULLOUT and the breaker selector in MANUAL and attach secure cards. Place "D1 Out of Service" signs on control board.

   b. Swap 11 and 12 charging pumps. Place 11 charging pump control switch in PULLOUT and attach a secure card. Place 12 charging pump in AUTO.

   c. Place a working copy of 1C1.4 on the turnover book for load decrease with steps marked up to current power level of 62%.

   d. Insert Order 0 malfunctions: ***(Relative Order 0)***

      - Failure of reactor trip breakers to open
      - 12 SI Pump Auto Start failures
      - 11 Charging Pump Overload

   e. Insert remaining malfunctions on remote triggers.

3. Prepare the simulator for the examination:

   a. Advance all chart recorders and ensure examiners time/date and initial them.
   b. Ensure all ERCS terminals are functioning normally.
   c. Verify all RPI's and step counters indicate 228 with bank D at 218
   d. Ensure recorder power is ON and alarms are not silenced
   e. Place turnover sheet and copy of LCO log in turnover book.
   f. When examiners are ready, bring applicants in and conduct a normal turnover.

4. Allow a few minutes for the applicants to walk down the control boards. Conduct remaining scenario actions as written when directed by the Lead Examiner.

5. Allow the crew to reduce power to 55% and remove 12 MFP and one condensate pump from service.

   a. **Take a snapshot prior to continuing** in case the reactor trips during the next event!

6. Enter the controlling pressurizer pressure channel failure 1P-431 high ***(Relative Order 1, Event Trigger #1)***.

a. Both sprays will open on instrument failure, and operator action will be required to prevent a reactor trip on low pressurizer pressure. IF THE REACTOR TRIPS, perform the following:

- Allow the crew to proceed through E-0 to ES-0.1 (if they stop the spray or trip both RCP's before getting an SI) or through E-0 until the spray valves are closed OR both RCP's are tripped.

– With the permission of the Lead Examiner, freeze the simulator and allow time for followup or clarification questions.

– Escort the students while the simulator is reset to the same initial conditions. Bring the students in, conduct the turnover again, and continue from the next event.

b. Trip bistables as directed ***(Relative Order 1a)***.

c. Five minutes after being directed, report bistable trips have been IV'd and a work order has been initiated.

7. Enter the letdown heat exchanger leak ***(Relative Order 2, Event Trigger #2)***.

a. Initial indications are decreasing RCS pressure and level and increasing CC surge tank level. R-39 will also alarm after a minute or two.

b. Initial actions per C47, followup per 1C4 AOP1, Reactor Coolant Leak, and C14 AOP2, Leakage Into the CC System.

c. Leak size exceeds allowable T.S. limit. Allow time for crew to isolate letdown and the letdown heat exchanger ***(Relative Order 2a)***. Once letdown is isolated, the leak reverses and CC flows into the VCT until the CC valves to the heat exchanger are isolated.

d. The heat exchanger is manually isolated when directed by removing the leak malfunction ***(Relative Order 2a)***.

8. When directed by the Lead Examiner, enter the Main Steamline Loop A rupture in containment ***(Relative Order 3, Event Trigger #3)***.

a. The reactor will automatically or manually be tripped and SI initiated.

b. The TD AFW pump fails to automatically start and will trip when manually started. If directed to investigate, report the overspeed trip mechanism will not reset. The TDAFW pump will not be restored this scenario.

c. Generator output breaker 8H16 fails to open 30 seconds after the trip and must be manually opened (will be noted by Auto Actions Guide).

d. MSIV's fail to automatically isolate and Loop A MSIV must be manually shut.

9. WHEN SI has actuated, the loss of power malfunctions will be automatically initiated ***(Relative Order 4, Event Trigger #4)***.

   a. 161 KV switchyard bus locks out immediately, causing a loss of the 1R supply to Unit 1 non-safeguard and one of two supplies to safeguards 4160V buses. Bus 15 will automatically transfer to the CT-11 supply.

   b. 60 seconds later, CT-11 transformer and Bus 16 lock out, resulting in a loss of all AC power on Unit 1.
   –Bus 15 will have no Unit 1 supplies available since D1 is OOS.
   –Bus 16 is locked out, so the MD AFW pump will not be recovered.
   –All AFW flow is lost.

10. The crew will transition to ECA-0.0 from E-0 step 3.

    a. Power to Bus 15 is restored via the bus ties to Bus 25, then the crew can return to E-0 step 3.

11. Isolate MSR's when directed ***(Relative Order 5, Event Trigger #5)***.

12. At Step 11 of E-0, the crew MAY transition to FR-H.1 on a loss of all AFW and MFW (if B S/G level is <50 WR. If transition is not made, the crew should make efforts to restore AFW in parallel with EOP's per the following notes.)

    a. Unit 1 AFW is not available due to trip mechanism failure (#11) and no power (#12); the loss of 1R transformer removes power from the condensate and FW pumps.

    b. Unit 2 AFW is cross connected per 1C28.1 section 5.7 ***(Relative Order 6, Event Trigger #6)*** and AFW flow restored.

    c. FR-H.1 is exited and the crew continues at Step 12 of E-0.

13. Terminate the scenario with Lead Examiner permission after 11 SG has been isolated in E-2 and AFW flow has been restored.

14. Direct the SS to complete PINGP 577 for the highest emergency classification reached. He may ask the board operators for information to help classify, but not receive help making the classification and notification.

Title: **2000 SRO NRC Exam Evaluation 'D'**	File Number: **Att. SRO-00-D** Rev: **0**

Name: _____ Position: SM SS Lead RO

Date: _____

Event Description	KA Number	KA Value
Reduce Power and Remove 12 MFP from Service	059 A4.03	2.9/2.9

Time	S/U	Position	Expected Response
			Power Reduction to 50-55% per 1C1.4
		RO	-Reduce turbine load and maintain Tavg and Delta I in band
		Lead	Remove 12 MFP from service
			-Open recirc valve
			-Verify remaining FW pump able to maintain SG levels
			-Stop 12 MFP
			-Verify discharge valve MV-32324 closes
		Lead	Remove one condensate pump from service
			-Stop the pump
			-Verify one pump in standby.
		SS	-Notify Power Marketing power change is complete
			-Notify Work Control Center 12 MFP is off

Comments:

Title: 2000 SRO NRC Exam Evaluation 'D'	File Number: Att. SRO-00-D Rev: 0

Event Description	KA Number	KA Value
Controlling Pressurizer Pressure Failure High	027 AA2.15	3.7/4.0

Time	S/U	Position	Expected Response
		RO	47012:0408 Pzr Hi/Lo Pressure Channel Alert
			-Verify pressure high
			-Restore pressure to normal using heaters/spray (manual control)
			-Refer to C51
		RO/Lead	C51.3 1P-431 High
			-Place pressurizer pressure control in MANUAL and stabilize pressure
			-Select position 2-1 on channel selector switch
			-Return pressure control to automatic.
			-Select recorder to working channel.
		SS	Refer to T.S. 3.5 (6 hr LCO until B/S trips complete)
			Refer to T.S. 3.10.J (2 hr LCO until pressure >2205 psig)
		RO	Trip bistables with I&C assistance
		Lead/SS	Initiate work order
			Make log entries

Evaluator Note: It is not critical to prevent a reactor trip on this malfunction. If the reactor trips, allow the crew to proceed through E-0 until ES-0.1 transition OR both RCP's are stopped or spray valves closed in E-0. The simulator will be reset and the scenario continued with the next event.

Comments:

Event Description	KA Number	KA Value
Letdown Heat Exchanger Leak to Component Cooling	009 EA2.03	3.4/3.8

Time	S/U	Position	Expected Response
		Lead	1R-39 CC System Liquid Monitor Alarm
			-Verify MV-32088 11 CC Surge Tank Vent CLOSED
			-Refer to 1C14 AOP2, Leakage into the CC system
			-When leaking HX found, isolate it and keep it isolated
		SS	Consider classifications per F3-2
			1C14 AOP2 Leakage Into the Component Cooling System
		Lead	-Verify MV-32088 closed if 1R-39 alarming
			-Check 1R-39 and refer to C4 AOP1.
			-Remove letdown HX from service and isolate CC flow to/from it.
		Lead/SS	Notify rad protection of RCS leakage into CC
		Lead	C4 AOP1 Reactor Coolant System Leak
			-Use ERCS "LEAK" program to determine leakrate (expect ~30 gpm)
			-Use Fig. 1 to identify leakage into CC system
			-Isolate letdown and establish excess letdown using C12.1 AOP3, C4 AOP1 and/or C12.1 for guidance. ***(critical task)***[1]
			-Direct isolation of CC to letdown HX
		SS	Refer to T.S. 3.1.C
			Notify GSPO/Resident of entry per SWI-0-28
			Contact system engineer

Evaluator Note: Order of procedures may be different if leakage is noted prior to CC system radiation alarm.
[1]To meet the critical task, letdown must be isolated **OR** actions initiated to shut down the reactor within 1 hour per TS 3.1.C.2.d.

Comments:

Event Description	KA Number	KA Value
11 Steam Generator Fault Into Containment	040 AA2.02	4.6/4.7

Time	S/U	Position	Expected Response
		Lead	Recognize fire detection alarm is in containment
		RO/Lead	Recognize steam flow/feed flow mismatch and alarms.
			Recognize degrading plant conditions
			Manually trip the reactor OR verify reactor trip.
		SS	Direct reactor trip on degrading plant conditions (if diagnosed prior to auto actions)

Comments:

Event Description	KA Number	KA Value
E-0 Immediate Actions	007 EA 2.06	4.3/4.5

Time	S/U	Position	Expected Response
		RO	Verify reactor trip.
		Lead	Verify turbine trip.
		Lead	Verify safeguards buses energized.[1]
		RO	Verify SI actuated
		Lead	Report to SS immediate actions are completed.
		SS	Read steps to verify immediate action steps completed
		SS	Upon loss of all AC, transition to ECA-0.0 per step 3 RNO

Evaluator Note: [1]During immediate actions from memory it is expected both buses will be energized since loss of all AC malfunction is delayed 60 seconds from SI initiation. The loss of power is expected during the SS readthru.

Comments:

Title: 2000 SRO NRC Exam Evaluation 'D'	File Number: Att. SRO-00-D Rev: 0

Event Description	KA Number	KA Value
ECA-0.0 Loss of All AC Power Cross-Tie Recovery	055 EA2.03	3.9/4.7

Time	S/U	Position	Expected Response
		Lead	Check if RCS is isolated
		RO	-Close CV-31330 ***(critical task)***
		Lead/RO	Verify AFW flow >200 gpm -Manually start 11 AFW pump -Direct operator to investigate overspeed and attempt local start
		SS	Announce trip, notify SEC, SM, NRC
		Lead	Verify cooling water pressure >25 psig
		Lead	Restore Power to One Safeguards Bus -Recognize Bus 16 locked out and do not attempt to repower it -No U-1 sources to Bus 15 since D1 OOS -Reset Unit 1 SI and verify no SI on Unit 2 Restore power to Bus 15 -Check load rejection lights lit -Place source breakers in pullout -Open 11 SI pump breaker -Close bus tie breakers -Start 11 SI pump manually
		SS	Transition to E-0 step 3

Comments:

Event Description	KA Number	KA Value
E-0 Reactor Trip Actions	007 EA2.06	4.3/4.5

Time	S/U	Position	Expected Response
			E-0 Reactor Trip and Safety Injection
		SS	-Initiate action to restore power to Bus 15.
		RO	-Verify SI actuated
		Lead	-Verify component alignment.
		Lead	-Check CL pressures >65 psig.
		SS	-Announce Rx trip and SI, notify SEC.
		Lead	-Close MV-32115.
		SS	-Ensure communication with NRC is established within 1 hour.
		Lead	-Open turbine HP drains.
		Lead/SS	-Direct outplant to stop the TB roof exhausters and isolate the MSR's per Att. J.
		Lead	Restore AFW flow to SGs[1] ***(critical task)***
			-Determine no AFW flow.
			-Check if intact SG level is >50%. If not, transition to FR-H.1.
			-Direct crosstie of AFW using 1C28.1 section 5.7
			-Establish >200 gpm total AFW flow, preferably to 12 SG
			-Maintain 21 AFW discharge pressure >900 psig

Evaluator Note: [1] Restoration of AFW to 12 SG may occur in E-0 or FR-H.1 depending on intact SG WR level. Critical task is met if 21 AFWP is supplying >200 gpm AFW to Unit 1 SG's.
IF FR-H.1 is used, see criteria on next page. Restoration may take place in parallel with EOP actions at a later time.

Comments:

Event Description	KA Number	KA Value
FR-H.1 Loss of Heat Sink	E05 EA1.3	3.8/4.2

Time	S/U	Position	Expected Response
		RO/Lead	Check if heat sink is required
		RO	Check for secondary heat sink
		Lead	Attempt to restore AFW flow.
			-11 AFWP- initiate action to repair
			-12 AFWP- initiate action to restore Bus 16 if not already done
			-21 AFWP- direct crosstie per 1C28.1 (see previous page)
		SS	Transition back to E-0 when >200 gpm flow restored
Evaluator Note:			Crew may continue actions in FR-H.1 in parallel with attempting crosstie, but only success path is cross connect.

Comments:

Event Description	KA Number	KA Value
E-0 actions (continued)		

Time	S/U	Position	Expected Response
		Lead/SS	-Implement Auto Action guide, Table E0-1 (direct extra operator).
		Lead	Place steam dump in "Steam Pressure" mode.
		Lead	Check RCS temperature trending towards 547 degF -May recommend dialing steam dump controller down to maintain RCS temperature
		Lead/RO	Check RCP cooling
		RO	Check PORV's/spray valves closed
		RO	Check RCP trip criteria (may have been met earlier)
		SS	Diagnose faulted SG and transition to 1E-2.
Evaluator Note:			RCP trip criteria not critical task for SLB event.
Comments:			

Title: 2000 SRO NRC Exam Evaluation 'D'	File Number: Att. SRO-00-D Rev: 0

Event Description	KA Number	KA Value
E-2 Faulted Steam Generator	040 AA1.03	4.3/4.3

Time	S/U	Position	Expected Response
		Lead/RO	Check 11 MSIV closed.
		Lead/SS	Determine 12 SG intact and 11 SG faulted.
		Lead	Isolate faulted SG.
			– Check feedlines and steamlines isolated.
		Lead	Check CST>5000 gal
		Lead/RO	Check secondary radiation normal
		SS	Transition to 1E-1.

Comments:

Simulator Input Summary

Relative Order	System or Panel Drawing	TYPE	CODE	Severity or Value	Event Trigger	TIMING	DESCRIPTION
0		MFS	FW34A				11 AFW PUMP FAILS TO START IN AUTO
0		MFS	FW33		9		11 AFW PUMP OVERSPEED TRIP
0		MFS	EG01A				GENERATOR OUTPUT BREAKER 8H16 FAILS TO OPEN
1		SO	RX202	2500	1		PT-431 CONTROLLING PZR PRESSURE FAILS HIGH
1A	RP03A		1TC-407-C	TRIP			BISTABLE TRIPS PER C51.3
			1TC-407-D	TRIP			
			1PC-431-A	TRIP			
			1PC-431-J	TRIP			
			1PC-431-I	TRIP			
			1PC-431-G	TRIP			
2		MFS	VC08	100	2		ONE LETDOWN HX TUBE RUPTURES
2A			VCO8	DELETE			ISOLATE LETDOWN HX
3		MFS	MS01A	100	3		11 SG FAULT INTO CONTAINMENT
4		MFS	ED01		4		LOSS OF 161 KV SWITCHYARD BUS
		MFS	ED19		4	+60 S	FAULT IN CT-11 TRANSFORMER
		MFS	ED09F		4	+60 S	LOCKOUT OF BUS 16
		ANN	47024:0104	CW	4	+60 S	BUS LOCKOUT ALARM
5		RF	MS108	CLOSE	5	+100	ISOLATE MSR'S WHEN DIRECTED

Relative Order	System or Panel Drawing	TYPE	CODE	Severity or Value	Event Trigger	TIMING	DESCRIPTION
		RF	MS109	CLOSE	5	+200	
		RF	MS110	CLOSE	5	+300	
		RF	MS111	CLOSE	5	+400	
6		RF	FW133		6		CROSS CONNECT 21 AFW TO UNIT 1

Trigger #4: set auto action on SI train A or B
Trigger #9: action: hwzfws6424 command: imf fw33 to trip pump when CS taken to start

We will gladly discuss any questions you have concerning this examination.

Sincerely
David E. Hills, Chief
Operations Branch
Division of Reactor Safety

Docket Nos. 50-282; 50-306
License Nos. DPR-42; DPR-60

Enclosures:
1. Operator Licensing Examination Report 50-282/2000301(DRS); 50-306/2000301(DRS)
2. Facility Comments and NRC Resolutions
3. Simulator Fidelity Report
4. Written Examination and Answer Keys (SRO)

cc w/encls 1, 2, 3:
Site General Manager, Prairie Island
Plant Manager, Prairie Island
J. Malcolm, Commissioner, Minnesota Department of Health
State Liaison Officer, State of Wisconsin
Tribal Council, Prairie Island Dakota Community

cc w/encls 1, 2, 3, 4: J. Jensen, Training Department

ADAMS Distribution:
CAC
WES
TJK3 (Project Mgr.)
T. Frye, NRR
A. Madison, NRR
S. Stein, NRR
J. Dyer, RIII w/encl
J. Caldwell, RIII w/encl
B. Clayton, RIII w/encl
SRI Prairie Island w/encl
DRP w/encl
RIDSRGN3DRS w/encl
RIII_IRTS
JRK1
BAH3

DOCUMENT NAME: G:DRS\PRA2000301 DRS.WPD ML 003728055
To receive a copy of this document, indicate in the box: "C" = Copy without attachment/enclosure "E" = Copy with attachment/enclosure "N" = No copy

OFFICE	RIII MGB		RIII		RIII	N		
NAME	MBielby:jb		RLanksbury /RA/		DHills DEH			
DATE	06/27/00		06/27/00		06/27/00			

OFFICIAL RECORD COPY

U.S. NUCLEAR REGULATORY COMMISSION

REGION III

Docket Nos:	50-282; 50-306
License Nos:	DPR-42; DPR-60
Report No:	50-282/2000301(DRS); 50-306/2000301(DRS)
Licensee:	Northern States Power Company
Facility:	Prairie Island Nuclear Generating Plant
Location:	1717 Wakonade Drive East Welch, MN 55089
Dates:	May 15-18, 2000
Examiners:	M. Bielby, Chief Examiner D. Pelton, Examiner G. Wilson, Observer
Approved by:	David E. Hills, Chief Operations Branch Division of Reactor Safety

NRC's REVISED REACTOR OVERSIGHT PROCESS

The federal Nuclear Regulatory Commission (NRC) recently revamped its inspection, assessment, and enforcement programs for commercial nuclear power plants. The new process takes into account improvements in the performance of the nuclear industry over the past 25 years and improved approaches of inspecting and assessing safety performance at NRC licensed plants.

The new process monitors licensee performance in three broad areas (called strategic performance areas) reactor safety (avoiding accidents and reducing the consequences of accidents if they occur), radiation safety (protecting plant employees and the public during routine operations), and safeguards (protecting the plant against sabotage or other security threats). The process focuses on licensee performance within each of seven cornerstones of safety in the three areas:

Reactor Safety	Radiation Safety	Safeguards
• Initiating Events	• Occupational	• Physical Protection
• Mitigating Systems	• Public	
• Barrier Integrity		
• Emergency Preparedness		

To monitor these seven cornerstones of safety, the NRC uses two processes that generate information about the safety significance of plant operations: inspections and performance indicators. Inspection findings will be evaluated according to their potential significance for safety, using the Significance Determination Process, and assigned colors of GREEN, WHITE, YELLOW or RED. GREEN findings are indicative of issues that, while they may not be desirable, represent very low safety significance. WHITE findings indicate issues that are of low to moderate safety significance. YELLOW findings are issues that are of substantial safety significance. RED findings represent issues that are of high safety significance with a significant reduction in safety margin.

Performance indicator data will be compared to established criteria for measuring licensee performance in terms of potential safety. Based on prescribed thresholds, the indicators will be classified by color representing varying levels of performance and incremental degradation in safety: GREEN, WHITE, YELLOW, and RED. GREEN indicators represent performance at a level requiring no additional NRC oversight beyond the baseline inspections. WHITE corresponds to performance that may result in increased NRC oversight. YELLOW represents performance that minimally reduces safety margin and requires even more NRC oversight. And RED indicates performance that represents a significant reduction in safety margin but still provides adequate protection to public health and safety.

The assessment process integrates performance indicators and inspection so the agency can reach objective conclusions regarding overall plant performance. The agency will use an Action Matrix to determine in a systematic, predictable manner which regulatory actions should be taken based on a licensee's performance. The NRC's actions in response to the significance (as represented by the color) of issues will be the same for performance indicators as for inspection findings. As a licensee's safety performance degrades, the NRC will take more and increasingly significant action, which can include shutting down a plant, as described in the Action Matrix.

More information can be found at: http://www.nrc.gov/NRR/OVERSIGHT/index.html.

EXAMINATION SUMMARY

Prairie Island Nuclear Generating Plant
NRC Inspection Report 50-282/2000301(DRS); 50-306/2000301(DRS)

During the week of May 15, 2000, NRC examiners conducted an announced operator licensing initial examination in accordance with the guidance of NUREG-1021, "Operator Licensing Examination Standards for Power Reactors," Revision 8. This examination implemented the operator licensing requirements of 10 CFR §55.41, §55.43 and §55.45.

Four senior reactor operator applicants were administered the written examination and operating tests. The licensee administered the written examination on May 15, 2000. The NRC administered the operating test during the same week.

Examination Summary:

- Two applicants passed all portions of their respective examinations, but were not issued senior reactor operator licenses until appeals are resolved. One applicant failed the written examination and one applicant failed the administrative portion of the operating examination. These individuals did not receive senior reactor operator licenses. Two of four applicants failing the examination was an abnormally high failure rate (Section 4OA5.1).

Report Details

4. OTHER ACTIVITIES

4OA5 Other

.1 Initial Licensing Examinations

a. Inspection Scope

The NRC examiners conducted announced operator licensing initial examinations during the week of May 15, 2000. The facility licensee developed the written examinations and operating tests. Four senior reactor operator applicants received written examinations and operating tests.

b. Issues and Findings

The licensee's training department personnel administered the written examination on May 15, 2000, in accordance with NUREG-1021, "Operator Licensing Examination Standards for Power Reactors," Revision 8. The NRC examiners independently graded the written examination and concluded that three applicants achieved the passing criteria of 80 percent and one applicant did not. The licensee submitted one post-examination comment on the written examination. The comment and the NRC's resolution are contained in Enclosure 2 of this report.

The NRC examiners determined that the written examination, as originally submitted by the licensee, was outside the acceptable quality range expected by the NRC. This determination was based on the fact that 28 written questions required replacement or significant modification when reviewed in accordance with NUREG-1021. The problems identified with the written examination included, but were not limited to, questions submitted with multiple correct answers, 60 percent of the questions were written at the memory level (NUREG-1021 allows for no more than 50 percent), and questions submitted containing multiple inappropriate distractors. The licensee indicated that they would be performing a root cause analysis to address the submitted examination quality. The licensee would be expected to incorporate any lessons learned from this effort into future examination submittals.

The NRC examiners administered the operating tests during the week of May 15, 2000. One applicant demonstrated unsatisfactory performance on the administrative portion of the operating examination and did not pass. The licensee submitted one post-examination comment on the operating examination. The comment and NRC's resolution are contained in Enclosure 2 of this report. The examiners identified the following generic performance deficiencies while administering the operating tests:

- During administration of a dynamic scenario that included a steam generator tube rupture with loss of coolant accident, a steam generator overfill condition resulted in a rapid pressure increase that caused cycling of the power operated relief valve (PORV) and a release pathway to the environment. The examiners observed that although individuals on both examination crews had sufficient time to take action, they did not focus on stopping the PORV actuation or demonstrate a concern for the release path. However, in this case, the reactor

coolant system activity level and steam generator in-leakage was insufficient to result in a significant release of contamination to the environment or to impact the offsite dose requirements contained in 10 CFR 100.

- Given plant conditions involving a loss of the main feedwater system in conjunction with a loss of the auxiliary feedwater and high head safety injection systems during an administrative job performance measure (JPM), several applicants mis-classified the event and as a result did not provide correct protective action recommendations.

The NRC examiners also identified several individual deficiencies in applicant performance during the operating examination which are described in each individual's examination report, Form ES-303-1, "Operator Licensing Examination Report." The NRC forwarded copies of the evaluations under separate correspondence to the Site Training Manager. The licensee submitted one post-examination comment. The comment and the NRC's resolution are contained in Enclosure 2 of this report.

The NRC examiners determined that the operating examination, as originally submitted, was within the range of acceptability expected for the proposed examination. The NRC examiners did not identify any significant security concerns associated with the development or administration of the tests.

The NRC examiners considered two of four applicants failing the examination to be an abnormally high failure rate.

4OA6 Meetings (Including Exit Meeting)

.1 Exit Meeting Summary

The inspectors presented the preliminary examination observations to Mr. Schuelke and other members of licensee management at the conclusion of the operating test on May 19, 2000. The licensee acknowledged the issues presented. No proprietary information was identified.

PARTIAL LIST OF PERSONS CONTACTED

Licensee:

D. Schuelke, Station Manager
T. Silverberg, Operations Manager
D. Westphal, Operations Department Training Supervisor
J. Jenson, Training Program Manager
J. Kempkes, Initial License Training Lead

NRC:

J. Munro, Nuclear Reactor Regulation (NRR), Operator Licensing Branch
S. Ray, Senior Resident Inspector, Prairie Island

Facility Comments and NRC Resolutions

Written Examination Question Number 59:

Comment: Recommend accepting both answers A (the original correct answer) and B as correct. Based on a review of Logic Diagram NF-40751-18, if the waste gas compressor were started in AUTO a pressure switch would stop the compressor if the waste gas header were to be reduced to 1.5 psig or less. If the compressor were started in MANUAL, the automatic shutdown feature would not be enabled. The stem of the question stated that the waste gas compressor was running, but did not state whether it were running in AUTO or in MANUAL. As a result of not stating the mode of operation in the stem, either answer A or B could be correct.

NRC Resolution: Recommendation accepted. Additional review of associated reference material supported the licensee's contention that knowledge of the mode of operation of the waste gas compressor would be required to preclude answer B from being correct.

Operating Examination JPM ADMIN-42, "Perform Interim Emergency Director Actions," Revision 0:

Comment: Based on the setup of the approved JPM, recommend that a classification of Site Area Emergency with a protective actions recommendation (PAR) of "NONE" be accepted in addition to the original correct answer which was a declaration of a General Emergency. This recommendation is based on the fact that the authors did not take action to preclude the restoration of the main feedwater system during the JPM. One candidate stated to the examiner that he would have to upgrade to a General Emergency if main feedwater could not be established. From candidate experience with the procedure (FR-H.1, "Loss of Secondary Heat Sink"), they could reasonably conclude that main feedwater to the steam generators would be restored by procedure within a few minutes, and classify the event as a Site Area Emergency.

NRC Resolution: Recommendation was not accepted. Based on a review of the simulator setup, discussions with the licensee, and the initiating cues provided to the applicants, the "current" plant conditions presented to the applicants (i.e., loss of the feedwater system in conjunction with the loss of the auxiliary feedwater and high head injection systems) should have driven the applicants to classify the event as a General Emergency in accordance with Procedure F3-2, "Classifications of Emergencies," Revision 26, Attachment 1, Condition 7 or Condition 20. The examiner documented the statement of one applicant as "If auxiliary feedwater is not restored, it would be a General Emergency" which conflicts with the licensee's post examination statement that the applicant referenced "main feedwater." The examination JPM initial conditions, simulator indications, and examiner cues identified that auxiliary feedwater was not in operation and could not be cross-connected. During the examination, none of the applicants asked for the status of main feedwater, or stated they thought feedwater and/or condensate could be recovered.

The notion that the applicants would declare the event based on systems that may be restored at a later time is contrary to F3-2, paragraphs 3.4.1 and 5.5 which state, in part, that in the case of an event that rapidly escalates then de-escalates [due perhaps to the recovery of the main feedwater system], the initial emergency classification should be based on current plant conditions. In addition, the applicants were not aware of the cause of loss of feedwater and therefore had no basis to positively conclude that feedwater could be later restored. Basing an emergency classification and protective action recommendations on a non-conservative and unconfirmed assumption is not in the best interests of public safety.

Enclosure 3

SIMULATION FACILITY REPORT

Facility Licensee: Prairie Island Nuclear Generating Plant

Facility Licensee Docket No: 50-282; 50-306

Operating Tests Administered: May 15–18, 2000

The following documents observations made by the NRC examination team during the initial operator license examination. These observations do not constitute audit or inspection findings and are not, without further verification and review, indicative of non-compliance with 10 CFR 55.45(b). These observations do not affect NRC certification or approval of the simulation facility other than to provide information which may be used in future evaluations. No licensee action is required in response to these observations.

During the conduct of the simulator portion of the operating tests, the following items were observed:

ITEM	DESCRIPTION
1.	None

Enclosure 4

WRITTEN EXAMINATION AND ANSWER KEYS (SRO)

This document will be available from ADAMS within 30 days under the title "Prairie Island Initial Examination 05/2000".

INITIAL SUBMITTAL OF THE OUTLINE

FOR THE PRAIRIE ISLAND INITIAL EXAMINATION THE WEEK OF MAY 15, 2000

February 9, 2000

Mike Bielby
U.S. NRC Region 3
801 Warrenville Road
Lisle, IL 60532-4351

John Kempkes
Prairie Island Training Center
1660 Wakonade Dr. W.
Welch, MN 55089

Dear Mr. Bielby:

Enclosed is the examination outline for the May 2000 Prairie Island Upgrade SRO exam. In accordance with NRC examination security requirements, this material is to be withheld from public viewing until after the examination is complete.

If you have any questions, please contact me at (651) 388-1165 x5031.

Sincerely,

John Kempkes
Initial Training Lead Instructor

Encl: Examination outline in separate envelope,

1) Outline for 100-question SRO written examination (Forms ES-401-3 and ES-401-5)
2) Outline for 5-JPM walkthrough examination (Form ES-301-2)
3) Outline for 5-JPM administrative topic examination (Form ES-301-1)
4) Outlines for four simulator scenarios (Form ES-D-1)
5) Transient and event checklist (Form ES-301-5)
6) Competencies checklist (Form ES-301-6)
7) Examination outline quality checklist (Form ES-201-2)

Facility: Prairie Island		Date of Examination: 5/15/00
Examination Level (circle one): ~~RO~~ / SRO		Operating Test Number: A
Administrative Topic/Subject Description		Describe method of evaluation: 1. ONE Administrative JPM, OR 2. TWO Administrative Questions
A.1	Plant Parameter Verification	JPM RC-20 Perform Alternate Calculation of Reactor Thermal Power – 2.1.19 [3.0]
	Fuel Handling	JPM New-Mod Direct Containment Isolation and Evacuation for High Flux Alarm during Fuel Handling – 2.1.20 [4.2]
A.2	Tagging & Clearances	JPM New – Review a faulted Isolation and Restoration (I&R) Closeout Form – 2.2.13 [3.8]
A.3	Control of Radioactive Releases	JPM New – Place Containment Purge in Service and Respond to Loss of Required Radiation Monitor – 2.3.9 [3.4]
A.4	Emergency Action Levels and Classification	JPM Admin-4 Complete the ED Checklist for a General Emergency – 2.4.38 [4.0]

Facility: Prairie Island Date of Examination: 5/15/00
Exam Level (circle one): ~~RO / SRO(I) /~~ SRO(U) Operating Test No.: A

B.1 Control Room Systems

System / JPM Title	Type Code*	Safety Function
a. CRDS/New-01 Perform Control Rod Quarterly Exercise on CB C; 2nd Rod Sticks at 216 steps	MAS	1
b. ECCS/New-02 Raise #12 Accumulator Level and Vent #12 Accumulator in Response to High Pressure	MAS	3
c.		
d.		
e.		
f.		
g.		

B.2 Facility Walk-Through

a. AFW/AF-3/2 Cross-connect 21 MDAFWP to Unit 1 SGs and Locally Start 21 MDAFWP (PRA sig. Operator action)	ML	4
b. CVCS/RC-8 Locally Isolate RCP Seals for Loss of All AC Power	DLR	2
c. HRPS/HC-1 Start Up Containment Hydrogen Recombiner	DL	5

* Type Codes: (D)irect from bank, (M)odified from bank, (N)ew, (A)lternate path, (C)ontrol room, (S)imulator, (L)ow-Power, (R)CA

Facility: Prairie Island Scenario No.: 1 Op-Test No.: A

Examiners: _____ Operators: _____

Initial Conditions: (IC-8) 100%, MOC, Equil Xe; Unit 2 at 100% power

Turnover: [1]Emergency Diesel Gen D2 OOS for brush rigging repair (OOS 1 hr, ETR 5 hrs)
[1]MDAFWP 12 OOS for bearing replacement (OOS 4 hrs, ETR 16 hrs)
12 SG has 10 gpd tube leak-has been steady for 10 days
Severe thunderstorm warning in effect for southeastern Minnesota
Dispatcher expects both units to remain at 100% power for rest of shift

Event No.	Malf. No.	Event Type*	Event Description
0	RP02 A/B	C	Failure of RTB's to open (ATWS)
0	TC11B	C	Turbine Trip Failure Auto/Manual
0	FW34,33,10	C	[1]TDAFWP Fails to start in Auto, Trips on manual start, won't restart
0	OVRD	C	[1]AFW Xconnect 2AF-13-1 Jammed shut
1	RX 13A/B	I	Selected Turbine 1st Stage Press Xmtr Fails Low; Rods insert in Auto
2	RX11B 100%	I	Feedwater Controller output fails full scale in Auto; 12 SG level increases as HCV-476 goes full open
3	OVRD	C	Letdown PCV fails closed in Auto, causing loss of letdown
4	CR 01 50%	C	Fuel Cladding Failure (Chemistry reports DE I-131 is 97 μc/gm when asked) If asked, Ops Mgr directs maximize letdown and shut down
4A	--	N/R	Decrease load for Controlled Shutdown
5	FW31A	C	11 Heater Drain Pump fails to minimum, requiring start of backup HDP
6	FW19A	M	Feedwater Rupture inside Containment with ATWS, Turbine Trip Failure causing loss of SG inventory
6A	ED09G	M	[2]Loss of 4160V Bus 25 [Insert with FW19A] (Loss of 21 MDAFWP causing Loss of Secondary Heat Sink, requires bleed and feed)

* (N)ormal, (R)eactivity, (I)nstrument, (C)omponent, (M)ajor
[1] PRA significant components OOS
[2] PRA significant event Loss of MFW (4.4% CDF)

Facility: Prairie Island Scenario No.: 2 Op-Test No.: A

Examiners: _____ Operators: _____

Initial Conditions: (IC-24) 78%, BOC, Ready to increase power, Equil Xe; Unit 2 in Mode 5

Turnover: [1]Emergency Diesel Gen D2 OOS for brush rigging repair (OOS 1 hr, ETR 5 hrs)
[1]MDAFWP 12 OOS for bearing replacement (OOS 4 hrs, ETR 16 hrs)
12 SG has 10 gpd tube leak-has been steady for 10 days
Severe thunderstorm warning in effect for southeastern Minnesota
Dispatcher requests Unit to return to 100% power this shift

Event No.	Malf. No.	Event Type*	Event Description
0	RP05/08A	C	Failure of Train A SI & Containment Isolation to actuate
0	CC02B	C	[1]12 CCW Pump Fails to Start in Auto
0	RD06L	C	Shutdown Bank B Rod K-9 Sticks at Top
0	FW02/01C	C	13 Cond Pump fails to start in Auto & trips when manually started
1	--	N/R	Increase Power to 100% at best rate
2	OVRD	I	Pzr Level Control channel fails low, isolating letdown
3	OVRD	I	Controlling 11 SG Steam Press Xmtr fails high, causing high steam flow signal, increasing 11 SG water level
4	SG01A 2%	C	11 SG Tube Leak at 1 gpm, requiring shutdown
5	FW01B	C	12 Condensate pump trips, requiring rapid power reduction
6	OVRD RC24A	C	Controlling Pzr Pressure Xmtr fails High and Spray valve PCV-431A fails open, requiring Rx trip
7	SG02A 10%	M	[2]11 SG Tube Rupture (500 gpm) [Insert on Rx trip]
7A	OVRD	C	11 SG PORV (CV 31084) Fails Open (Insert on Rx trip)

* (N)ormal, (R)eactivity, (I)nstrument, (C)omponent, (M)ajor
[1] PRA significant components OOS.
[2] PRA significant sequence SGTR (7.1% CDF)

Facility: Prairie Island Scenario No.: 3 Op-Test No.: A

Examiners: _____ Operators: _____

Initial Conditions: (IC-8) 100%, MOC, Equil Xe; Unit 2 at 100% power

Turnover: [1]Emergency Diesel Gen D1 OOS for Injector Replacement (OOS 2 hr; ETR 2 hrs)
11 Charging Pump OOS for Packing Replacement (OOS 1 hr; ETR 2 hr)
11 SG has 10 gpd tube leak – has been steady for 2 weeks
Severe ice storm watch in effect for southeastern Minnesota
Dispatcher expects both units to remain at 100% pending start of icing conditions

Event No.	Malf. No.	Event Type*	Event Description
0	DG07B	C	EDG D2 Auto Start Failure
0	TC01A	C	Turbine Stop Valve CV-31182 Fails to Close
0	SI05B	C	12 SI Pump fails to Start in Auto
0	RP07	C	Mechanical Failure of Rx Trip
1	RX07D	I	RCS Loop B T-hot Transmitter fails High causing rods to insert in Auto
2	VC05B/C	C	Failed Open Relief Valve on Running Charging Pump 12/13 Causes Loss of Charging Flow
3	EG02	C	Loss of Generator Hydrogen Cooling requiring load reduction
3A	-	N/R	Decrease Load for High Hydrogen Temp
4	RP04B	I	Inadvertent SI Train B Actuation requiring Manual Rx Trip
5	RC19A 5% to 50%	M	Pzr Safety Valve Leaks at 50 lbm/hr Causing Need for Actual SI [Insert when Enter ES-0.1]
6	ED-14	M	[2]Loss of All Offsite AC Power causing blackout until EDG D2 manually started [Insert upon Evt 5 SI actuation]
6A	RC-18	M	[3]Pzr Safety Valve RC-10-1 Fails Open [Insert 30 sec after Evt 6]

* (N)ormal, (R)eactivity, (I)nstrument, (C)omponent, (M)ajor
[1] PRA significant component OOS
[2] PRA significant sequence LOOP (34.2% CDF)
[3] PRA significant SBLOCA (1.3% CDF)

Facility: Prairie Island Scenario No.: 4 Op-Test No.: A

Examiners: _____ Operators: _____

_____ _____

_____ _____

Initial Conditions: (IC-25) 67%, MOC, Ramping down, Xe increasing, Unit 2 in Mode 5

Turnover: [1]Emergency Diesel Gen D1 OOS for Injector Replacement (OOS 2 hr; ETR 2 hrs)
11 Charging Pump OOS for Packing Replacement (OOS 1 hr; ETR 2 hr)
11 SG has 10 gpd tube leak – has been steady for 2 weeks
Severe ice storm warning in effect for southeastern Minnesota
Dispatcher has requested rampdown to 50% prior to ice storm arrival

Event No.	Malf. No.	Event Type*	Event Description
0	RP06	C	Failure of MSIVs to Isolate
0	FW34,33,10 OVRD	C	TDAFWP Fails to Start in Auto, Trips on Manual Start, won't restart; AFW Xconnect AF-13-1 Jammed Shut
0	DG04B	C	EDG Output Breaker 16-09 Fails Open
0	EG01A	C	Gen Output Breaker 8H16 Fails to Open on Turbine Trip
1	OVRD	I	Controlling Pzr Pressure Xmtr fails High requiring manual control of sprays and heaters
2	OVRD	I	Controlling 11 SG Steam Flow Xmtr fails LOW causing decreasing 11 SG water level in Auto
3	TC10	C	Turbine Control Failure Causing an Increase in Power Requiring Manual Control to Continue Rampdown
4	VC08	C	Letdown Heat Exchanger Tube Rupture to CCW requiring shift to Excess Letdown
5	FW03A/B 5% to 10%	C	Slow Loss of Condenser Vacuum requiring Controlled Rampdown
5A	-	N/R	Decrease Load for Controlled Shutdown
6	MS01A 100%	M	[2]Main Steam Line Rupture inside Containment, Eventually Causing Loss of Heat Sink, Requiring Main Feed/Cond
6A	ED01	M	Loss of 161 KV Bus causing Loss of Safeguards Power until CT-11 Tied in [Insert 90 seconds after Evt 6]
6B	ED19	M	Fault in CT-11 Transformer [Insert 60 sec after CT-11 Tied in]

* (N)ormal, (R)eactivity, (I)nstrument, (C)omponent, (M)ajor

[1] PRA significant component OOS
[2] PRA significant sequence Loss of MFW; operator action, restore MFW following a reactor trip

PRAIRIE ISLAND OPERATING TEST NO.: A

Applicant Type	Evolution Type	Minimum Number	Scenario Number 1	2	3	4
RO	Reactivity	1				
	Normal	1				
	Instrument	2				
	Component	2				
	Major	1				
As RO	Reactivity	1				
	Normal	0				
	Instrument	1				
	Component	1				
	Major	1				
SRO-I						
As SRO	Reactivity	0				
	Normal	1				
	Instrument	1				
	Component	1				
	Major	1				
SRO-U	Reactivity	0	4A	1	3A	5A
	Normal	1	4A	1	3A	5A
	Instrument	1	1,2	2,3	1,4	1,2
	Component	1	3,4,5	4,5,6	2,3	3,4,5
	Major	1	6	7	5,6	6,6A/B

Instructions: (1) Enter the operating test number and Form ES-D-1 event numbers for each evolution type.

(2) Reactivity manipulations may be conducted under normal or *controlled* abnormal conditions (refer to Section D.4.d) but must be significant per Section C.2.a of Appendix D.

Author: G.D. Weale

Chief Examiner: _____

PRAIRIE ISLAND

Competencies	Applicant #4 RO/SRO-I/SRO-U SCENARIO SM 1	BOP 2	RO 3	SRO 4	Applicant #2 RO/SRO-I/SRO-U SCENARIO 1	2	3	4	Applicant #3 RO/SRO-I/SRO-U SCENARIO 1	2	3	4
Understand and Interpret Annunciators and Alarms	6A	3,4, 5	1, 2, 5	1, 2, 4, 5								
Diagnose Events and Conditions	6A	3,4, 5	1, 2, 5	1, 2, 4, 5								
Understand Plant and System Response	6A	3,4, 5	1, 2, 5	1, 2, 4, 5								
Comply With and Use Procedures (1)	6A	3, 4	1, 2	4, 5								
Operate Control Boards (2)	–	3,4 5,6	1, 2, 5	–								
Communicate and Interact With the Crew	6A	3,4, 5	1, 2, 5	4, 5								
Demonstrate Supervisory Ability (3)	6A	–	–	4, 5, 6								
Comply With and Use Tech. Specs. (3)	4	–	–	1, 2								

Notes:

(1) Includes Technical Specification compliance for an RO.
(2) Optional for an SRO-U.
(3) Only applicable to SROs.

Instructions:

Circle the applicant's license type and enter one or more event numbers that will allow the examiners to evaluate every applicable competency for every applicant.

Author: GD Weale

Chief Examiner: _____

PRAIRIE ISLAND

Competencies	Applicant #1 RO/SRO-I/SRO-U				Applicant #2 RO/SRO-I/SRO-U				Applicant #3 RO/SRO-I/SRO-U			
	SCENARIO				SCENARIO				SCENARIO			
	SRO 1	RO 2	SM 3	BOP 4	RO 1	SRO 2	BOP 3	SM 4	BOP 1	SM 2	SRO 3	RO 4
Understand and Interpret Annunciators and Alarms	1,2,3,5	2,4,6	6,6A	2,5	1,3	2,3,4,5	3,4	6	2,5	7	1,2,3,4	1,4
Diagnose Events and Conditions	1,2,3,5	2,6	6,6A	2,3,5	1,3	2,3,4,5	3,4	6	2,5	7	1,2,3,4	1,4
Understand Plant and System Response	1,2 3,5	2,6	6,6A	2,3,5	1,3	2,3,4,5	3,4	6	2,5	7	1,2,3,4	1,4
Comply With and Use Procedures (1)	4	2	6,6A	2	1,3	4	3	6	2	7	3,4	1,4
Operate Control Boards (2)	–	2,4,6	–	2,3,5	1,3,4,6	–	3,4	–	2,5,4A	–	–	1,4
Communicate and Interact With the Crew	4,6	2,6	6,6A	2,3,5	1,3,6	4,7	3,4	6	2,5	7	3,4,5,6	1,4
Demonstrate Supervisory Ability (3)	4,6	–	6,6A	–	–	4,7	–	6	–	7	3,4,5,6	–
Comply With and Use Tech. Specs. (3)	4	–	1	–	–	2,3	–	1,2	–	2,3	1	–

Notes:

(1) Includes Technical Specification compliance for an RO.
(2) Optional for an SRO-U.
(3) Only applicable to SROs.

Instructions:

Circle the applicant's license type and enter one or more event numbers that will allow the examiners to evaluate every applicable competency for every applicant.

Author: GD Weale

Chief Examiner: _____

Facility: Prairie Island Date of Exam: 5/15/00 Exam Level: S

Tier	Group	K/A Category Points											Point Total
		K 1	K 2	K 3	K 4	K 5	K 6	A 1	A 2	A 3	A 4	G *	
1. Emergency & Abnormal Plant Evolutions	1	2	6	6				4	3			3	24
	2	2	1	3				3	3			4	16
	3	0	1	2				0	0			0	3
	Tier Totals	4	8	11				7	6			7	43
2. Plant Systems	1	3	1	1	1	3	3	1	1	2	3	0	19
	2	1	1	2	3	2	1	1	2	1	1	2	17
	3	0	0	1	0	0	1	0	0	0	0	2	4
	Tier Totals	4	2	4	4	5	5	2	3	3	4	4	40

3. Generic Knowledge and Abilities	Cat 1	Cat 2	Cat 3	Cat 4	
	4	3	5	5	17

Note:
1. Ensure that at least two topics from every K/A category are sampled within each tier (i.e., the "Tier Totals" in each K/A category shall not be less than two).
2. Actual point totals must match those specified in the table.
3. Select topics from many systems; avoid selecting more than two or three K/A topics from a given system unless they relate to plant-specific priorities.
4. Systems/evolutions within each group are identified on the associated outline.
5. The shaded areas are not applicable to the category/tier.
6.* The generic K/As in Tiers 1 and 2 shall be selected from Section 2 of the K/A Catalog, but the topics must be relevant to the applicable evolution or system.
7. On the following pages, enter the K/A numbers, a brief description of each topic, the topics' importance ratings for the RO license level, and the point totals for each system and category. K/As below 2.5 should be justified on the basis of plant-specific priorities. Enter the tier totals for each category in the table above.

Original Initial Written Exam Outline MES

ES-401	PWR SRO Examination Outline Emergency and Abnormal Plant Evolutions - Tier 1/Group 1						Form ES-401-3			
E/APE # / Name / Safety Function	K1	K2	K3	A1	A2	G	K/A Topic(s)		Imp.	Points
000001 Continuous Rod Withdrawal / 1				X			A1.04	Operate/monitor emergency borate MOV	3.6	1
000003 Dropped Control Rod / 1	X						K1.17	Fuel temp. coeff. response on dropped control rod	3.1	1
000005 Inoperable/Stuck Control Rod / 1			X				K3.02	Rod insertion limits	4.2	1
000011 Large Break LOCA / 3		X					K2.02	Interrelations between LOCA and pumps	2.7	1
W/E04 LOCA Outside Containment / 3		X					K2.02	Interrelations between LOCA and heat removal systems	4.0	1
W/EO1 & E02 Rediagnosis & SI Termination / 3			X				K3.04	Adhere to procedures during Rediagnosis	3.6	1
000015/17 RCP Malfunctions / 4		X					K2.08	Interrelations between RCP malfunctions and CCW	2.6	1
BW/E09; CE/A13; W/E09&**E10** Natural Circ. / 4		X					K2.01	Interrelations between Nat. Circ. and Safety Systems	3.5	1
000024 Emergency Boration / 1			X				K3.01	Reasons for when Emerg. Boration is required	4.4	1
000026 Loss of Component Cooling Water / 8						X	2.1.33	Recognize entry conditions for Tech. Specs.	4.0	1
000029 Anticipated Transient w/o Scram / 1					X		A2.01	Interpret nuclear instrumentation	4.7	1
000040 (BW/E05; CE/E05; **W/E12**) Steam Line Rupture - Excessive Heat Transfer / 4		X					K2.02	Interrelations between uncontrolled S/G depressurization and heat removal systems	3.9	1
CE/A11; W/E08 RCS Overcooling - PTS / 4		X					K2.02	Interrelations between PTS and heat removal systems	4.0	1
000051 Loss of Condenser Vacuum / 4			X				K3.01	Reasons for loss of steam dump capability upon loss of vacuum	3.1	1
000055 Station Blackout / 6						X	2.2.03	Knowledge of differences between units	3.3	1
000057 Loss of Vital AC Elec. Inst. Bus / 6				X	X		A1.05 A2.19	Backup instrument indications Plant automatic actions	3.4 4.3	1 1
000059 Accidental Liquid RadWaste Rel. / 9			X				K3.01	Reasons for terminating release	3.9	1
000062 Loss of Nuclear Service Water / 4				X			A1.01	Temperature indications - monitor	3.1	1
000067 Plant Fire On-site / 9			X				K3.01	Reasons for installation of fire detectors	2.8	1
000068 (BW/A06) Control Room Evac. / 8				X			A1.28	Pressurizer level and pressure control	4.0	1
000069 (**W/E14**) Loss of CTMT Integrity / 5	X						K1.03	Alarms, indications, and remedial actions for high ctmt pressure	3.6	1
000074 (W/E06&E07) Inad. Core Cooling / 4					X		A2.08	Effect of steam dump operation on RCS temperature and pressure	4.6	1
BW/E03 Inadequate Subcooling Margin / 4								Not applicable to facility		
000076 High Reactor Coolant Activity / 9						X	2.3.08	Process for performing a planned gaseous radioactive release	3.2	1
BW/A02&A03 Loss of NNI-X/Y / 7								Not applicable to facility		
K/A Category Totals:	2	6	6	4	3	3	Group Point Total:			24

ES-401	PWR SRO Examination Outline Emergency and Abnormal Plant Evolutions - Tier 1/Group 2								Form ES-401-3
E/APE # / Name / Safety Function	K1	K2	K3	A1	A2	G	K/A Topic(s)	Imp.	Points
000007 (BW/E02&E10; CE/E02) Reactor Trip - Stabilization - Recovery / 1				X			A1.02 Operate and monitor the MFW system upon a reactor trip	3.7	1
BW/A01 Plant Runback / 1							Not applicable to facility		
BW/A04 Turbine Trip / 4							Not applicable to facility		
000008 Pressurizer Vapor Space Accident / 3			X				K3.03 Reasons for EOP actions	4.6	1
000009 Small Break LOCA / 3		X					K2.03 Interrelations between SBLOCA and S/Gs	3.3	1
BW/E08; W/E03 LOCA Cooldown - Depress. / 4					X		A2.01 Selection of appropriate procedures	4.2	1
W/E11 Loss of Emergency Coolant Recirc. / 4			X				K3.03 Reasons for manipulation of controls	3.8	1
000022 Loss of Reactor Coolant Makeup / 2							Not selected by lottery		
000025 Loss of RHR System / 4					X		A2.06 Determine existence of proper RHR overpressure protection	3.4	1
000027 Pressurizer Pressure Control System Malfunction / 3				X			A1.05 Transfer of heaters to backup power supply	3.3	1
000032 Loss of Source Range NI / 7						X	2.1.07 Evaluate plant performance	4.4	1
000033 Loss of Intermediate Range NI / 7							Not selected by lottery		
000037 Steam Generator Tube Leak / 3	X						K1.02 Leak rate vs. pressure drop	3.9	1
000038 Steam Generator Tube Rupture / 3					X		A2.14 Effect on rad release if steam dumps or atmos. reliefs are used	4.6	1
000054 (CE/E06) Loss of Main Feedwater / 4						X	2.1.32 Explain and apply limits and precautions	3.8	1
BW/E04; W/E05 Inadequate Heat Transfer - Loss of Secondary Heat Sink / 4						X	2.4.06 Knowledge of EOP mitigation strategies	4.0	1
000058 Loss of DC Power / 6	X						K1.01 Battery charger equipment and operation	3.1	1
000060 Accidental Gaseous Radwaste Rel. / 9			X				K3.03 Actions in EOPs for accidental release	4.2	1
000061 ARM System Alarms / 7							Not selected by lottery		
W/E16 High Containment Radiation / 9						X	2.4.45 Interpret and prioritize alarms	4.0	1
000065 Loss of Instrument Air / 8				X			A1.05 Operate RPS for loss of instrument air	3.3	1
CE/E09 Functional Recovery							Not applicable to facility		
K/A Category Point Totals:	2	1	3	3	3	4	Group Point Total:		16

ES-401	PWR SRO Examination Outline Emergency and Abnormal Plant Evolutions - Tier 1/Group 3						Form ES-401-3		
E/APE # / Name / Safety Function	K1	K2	K3	A1	A2	G	K/A Topic(s)	Imp.	Points
000028 Pressurizer Level Malfunction / 2			X				K3.02 Pressurizer pressure increase from reactor makeup/letdown imbalance	3.2	1
000036 (BW/A08) Fuel Handling Accident / 8							Not selected by lottery		
000056 Loss of Off-site Power / 6			X				K3.01 Load sequencer operation	3.9	1
BW/E13&E14 EOP Rules and Enclosures							Not applicable to facility		
BW/A05 Emergency Diesel Actuation / 6							Not applicable to facility		
BW/A07 Flooding / 8							Not applicable to facility		
CE/A16 Excess RCS Leakage / 2							Not applicable to facility		
W/E13 Steam Generator Over-pressure / 4		X					K2.01 Operation of control and safety systems	3.1	1
W/E15 Containment Flooding / 5							Not selected by lottery		
K/A Category Point Totals:	0	1	2	0	0	0	Group Point Total:		3

ES-401	PWR SRO Examination Outline Plant Systems - Tier 2/Group 1											Form ES-401-3		
System # / Name	K1	K2	K3	K4	K5	K6	A1	A2	A3	A4	G	K/A Topic(s)	Imp.	Points
001 Control Rod Drive					X							K5.69 Overlap between SR & IR	3.6	1
003 Reactor Coolant Pump						X						K6.04 Ctmt Isolation valve effect on RCP operation	3.1	1
004 Chemical and Volume Control					X							K5.36 Temp. effect on solubility of boron	2.8	1
013 Engineered Safety Features Actuation						X						K6.01 Loss of ESFAS detectors	3.1	1
014 Rod Position Indication	X											K1.01 Cause/effect for RPIS & CRDS	3.6	1
015 Nuclear Instrumentation										X		A4.02 Manually operate NIS	3.9	1
017 In-core Temperature Monitor			X									K3.01 Nat. Circ. loss of indication	3.7	1
022 Containment Cooling								X				A2.04 Loss of cooling water	3.2	1
025 Ice Condenser												Not applicable to facility		
026 Containment Spray	X											K1.02 Cause/effect with cooling water	4.1	1
056 Condensate				X								K4.14 Design features to ensure MFW NPSH	2.6	1
059 Main Feedwater							X					A1.03 Power level restrictions for MFW	2.9	1
061 Auxiliary/Emergency Feedwater									X			A3.04 Automatic AFW isolation	4.2	1
063 DC Electrical Distribution	X											K1.02 Cause/effect of DC and AC systems	3.2	1
068 Liquid Radwaste					X					X		K5.03 Units of dose and dose rate A4.03 Stop release if limits exceeded	2.6 3.8	1 1
071 Waste Gas Disposal						X			X			K6.10 Effect of malf. on decay tanks A3.03 Auto actuation on alarm	2.5 3.8	1 1
072 Area Radiation Monitoring		X								X		K2.01 Power supplies to RMS A4.03 Operate source check	2.5 3.1	1 1
K/A Category Point Totals:	3	1	1	1	3	3	1	1	2	3	0	Group Point Total:		19

ES-401	PWR SRO Examination Outline Plant Systems - Tier 2/Group 2											Form ES-401-3		
System # / Name	K1	K2	K3	K4	K5	K6	A1	A2	A3	A4	G	K/A Topic(s)	Imp.	Points
002 Reactor Coolant							X					A1.08 Predict change in Tavg	3.8	1
006 Emergency Core Cooling												Not selected by lottery		
010 Pressurizer Pressure Control					X							K5.02 Constant enthalpy expansion	3.0	1
011 Pressurizer Level Control		X										K2.01 Power supplies to charging pumps	3.2	1
012 Reactor Protection			X									K3.02 RPS malfunction effect on Main Turbine	3.3	1
016 Non-nuclear Instrumentation						X						K6.01 Effect of NNIS malfunction	2.5	1
027 Containment Iodine Removal								X				A2.01 Effect of Hi temp in Charcoal Filter	3.3	1
028 Hydrogen Recombiner and Purge Control	X											K1.01 Physical connection between HRPS and Containment annulus	2.5	1
029 Containment Purge												Not selected by lottery		
033 Spent Fuel Pool Cooling											X	2.4.04 Entry into EOPs or AOPs	4.3	1
034 Fuel Handling Equipment												Not selected by lottery		
035 Steam Generator			X									K3.03 S/G malfunction effect on secondary systems	3.1	1
039 Main and Reheat Steam				X								K4.05 Automatic steam line isolation	3.7	1
055 Condenser Air Removal				X								K4.02 Air ejector exhaust monitoring	2.6	1
062 AC Electrical Distribution								X				A2.02 Causes and significance of grounds	2.6	1
064 Emergency Diesel Generator											X	2.4.47 Diagnose trends using reference material	3.7	1
073 Process Radiation Monitoring					X							K5.03 Radiation intensity vs. exposure limits	3.4	1
075 Circulating Water				X								K4.01 Circ. Water heat sink	2.8	1
079 Station Air										X		A4.01 Operate/monitor cross-tie valves with IAS	2.7	1
086 Fire Protection												Not selected by lottery		
103 Containment									X			A3.01 Automatic containment isolation	4.2	1
K/A Category Point Totals:	1	1	2	3	2	1	1	2	1	1	2	Group Point Total:		17

ES-401	PWR SRO Examination Outline Plant Systems - Tier 2/Group 3											Form ES-401-3		
System # / Name	K1	K2	K3	K4	K5	K6	A1	A2	A3	A4	G	K/A Topic(s)	Imp.	Points
005 Residual Heat Removal						X						K6.11 Loss of RHR flow control	2.7	1
007 Pressurizer Relief/Quench Tank												Not selected by lottery		
008 Component Cooling Water											X	2.4.11 Knowledge of abnormal event procedures	3.6	1
041 Steam Dump/Turbine Bypass Control												Not selected by lottery		
045 Main Turbine Generator												Not selected by lottery		
076 Service Water			X									K3.05 Effect of loss of cooling water on RHR components	3.2	1
078 Instrument Air											X	2.4.31 Knowledge of alarms and indications and response	3.4	1
K/A Category Point Totals:	0	0	1	0	0	1	0	0	0	0	2	Group Point Total:		4

Plant-Specific Priorities

System / Topic	Recommended Replacement for...	Reason	Points
Plant-Specific Priority Total: (limit 10)			

Facility: Prairie Island Date of Exam: 5/15/00 Exam Level: S

Category	K/A #	Topic	Imp.	Points
Conduct of Operations	2.1.1	Knowledge of conduct of ops. requirements	3.8	1
	2.1.4	Shift staffing requirements	3.4	1
	2.1.6	Supervise and manage during plant transients and upset conditions	4.3	1
	2.1.34	Maintain primary and secondary plant chemistry within limits	2.9	1
	Total			4
Equipment Control	2.2.2	Manipulate controls between shutdown and power levels	3.5	1
	2.2.12	Knowledge of surveillance procedures	3.4	1
	2.2.21	Knowledge of pre- and post-maintenance operability requirements	3.5	1
	Total			3
Radiation Control	2.3.1	Knowledge of 10CFR20 and facility radiation control requirements	3.0	1
	2.3.2	Knowledge of facility ALARA program	2.9	1
	2.3.3	Knowledge of SRO responsibilities for auxiliary systems outside the CR	2.9	1
	2.3.5	Use of personnel monitoring requirement	2.5	1
	2.3.10	Perform procedures to reduce excessive levels of radiation exposure	3.3	1
	Total			5
Emergency Procedures/ Plan	2.4.1	EOP entry conditions and immediate action steps	4.6	1
	2.4.4	Abnormal system operating parameters	4.3	1
	2.4.11	Knowledge of abnormal condition procedures	3.6	1
	2.4.19	Knowledge of EOP layout, symbols and icons	3.7	1
	2.4.34	RO tasks performed outside the CR during emergency operations	3.6	1
	Total			5
Tier 3 Point Total (SRO)				17

INITIAL SUBMITTAL OF THE EXAMINATION

FOR THE PRAIRIE ISLAND INITIAL EXAMINATION THE WEEK OF MAY 15, 2000

Northern States Power Company

1660 Wakonade Dr. E.
Welch, MN 55089
Telephone (651) 388-1165 x5031

March 23, 2000

Mr. Michael Bielby
Chief Examiner
US NRC Region III
801 Warrenville Road
Lisle, IL 60532-4351

Dear Mr. Bielby:

Enclosed is the examination material for the May 2000 SRO Upgrade examination at Prairie Island. In accordance with ES-201 Attachment 1, this material should be withheld from public disclosure until the examinations are complete.

Attachment 1 describes the changes that have been made from the previously submitted outline along with the reasons. A new outline is enclosed with changes in bold.

John Kempkes

attachments: 1

encl: 1) Updated examination outline
2) Written examination with references
3) Operating examination (4 scenarios)
4) JPM's- Simulator (2), Plant or Other (8)

Northern States Power Company

1660 Wakonade Dr. E.
Welch, MN 55089
Telephone (651) 388-1165 x5031

March 23, 2000

Mr. Michael Bielby
Lead Examiner
US NRC Region III
801 Warrenville Road
Lisle, IL 60532-4351

Dear Mr. Bielby:

This letter addresses the changes made to the May 2000 Prairie Island SRO Upgrade examination outline since its original submittal. This information should be withheld from public viewing until the examination is complete.

Skyscraper: No changes.

Written Tier 2/Group 1: Replaced 071 A3.02 with 003 A3.02. The original K/A would have been double jeopardy with 000060 K3.03, and the original outline already has a high number of radwaste questions.

Written Tier 2/Group 2: PI does not have a Containment Iodine Removal System that would allow 027 A2.02 to be valid. There is a non-safeguards cleanup system, but there are no alarms for high temperature associated with it. Changed to 034 A2.02, which previously was not selected.

Scenarios: Deleted some instrument and component failures that were not SRO discriminatory due to length and difficulty of remaining scenario components and discussions with examiner. Deleted existing tube leakage at start of scenarios due to interferences with later problems. Corrected problems discovered during scenario writing.

1) Scenario A: Deleted two component malfunctions. Feedwater controller failure open is not significant transient and is cross-purpose to the major transient of a loss of FW requiring bleed and feed. 11 Heater Drain Pump failure was replaced by a power change as required by the fuel cladding failure to provide a better scenario flowpath for normal operations.

2) Scenario B: Added swap of running condensate pumps to meet requirement for normal operation. Deleted loss of condensate pump with controlling pressurizer pressure channel failing high; not required for component or instrument failures. Also, during downpower it is not discriminatory as it may not be possible to diagnose and respond to this in time to prevent a trip.

3) Scenario C: Deleted 11 charging pump OOS initial condition due to normal operation later. Deleted generator hydrogen cooling malfunction as not credible due to system design. Replaced it with swapping running charging pumps to meet normal operation requirement. Replaced charging line relief failure with charging line leakage in containment due to simulator discrepancy and better tie-in with later loss of offsite power (prevents any charging flow).

4) Scenario D: Added normal operation at beginning to reduce power to 55% and remove 12 MFP from service. Deleted turbine control failure to reduce component malfunctions.

Scenario Overlap with Audit Exam: Two overlaps were noted and evaluated to be not significant enough to requiring change. There is a controlling pressurizer pressure channel failure high in the audit and Scenario D, but this is a common failure. The audit also has an SG leak progressing to a faulted/ruptured SG to the auxiliary building. Scenario B has a SG leak progressing to a faulted/ruptured SG through the SG safety. However, the NRC exam scenario includes a failure of one train of ESF actuation requiring manual lineup and is more difficult to diagnose, plus the scenario ends after the cooldown instead of proceeding through ECA-3.1.

Administrative Topics: Replaced JPM on containment purge since there are no required SRO administrative tasks associated with this (the Rad Protection supervisor approves the release form). Substituted an emergency plan task to direct a plant evacuation and then recognize and direct a local auxiliary building evacuation on high radiation levels.

CR Systems and Facility Walkthrough: Changed rod on B.1.a to SDA rod to match order in SP.

If there are any questions, please contact me.

John Kempkes

ES-401PWR SRO Examination OutlineForm ES-401-3
Plant Systems - Tier 2/Group 1

System # / Name	K1	K2	K3	K4	K5	K6	A1	A2	A3	A4	G	K/A Topic(s)	Imp.	BMN/ MCA
001 Control Rod Drive					X							K5.69 Overlap between SR & IR	3.6/B	N/C
003 Reactor Coolant Pump						X			X			**A3.02 RCP Lube Oil & Bearing Lift** K6.04 Ctmt Isolation valve effect on RCP operation	**2.6/B** 3.1/B	**N/C** N/C
004 Chemical and Volume Control					X							K5.36 Temp. effect on solubility of boron	2.8/B	M/M
013 Engineered Safety Features Actuation						X						K6.01 Loss of ESFAS detectors	3.1/B	B/C
014 Rod Position Indication	X											K1.01 Cause/effect for RPIS & CRDS	3.6/B	N/M
015 Nuclear Instrumentation										X		A4.02 Manually operate NIS	3.9/B	M/A
017 In-core Temperature Monitor			X									K3.01 Nat. Circ. loss of indication	3.7/B	N/C
022 Containment Cooling								X				A2.04 Loss of cooling water	3.2/B	N/C
025 Ice Condenser												Not applicable to facility		
026 Containment Spray	X											K1.02 Cause/effect with cooling water	4.1/B	N/M
056 Condensate				X								K4.14 Design features to ensure MFW NPSH	2.6/B	M/M
059 Main Feedwater							X					A1.03 Power level restrictions for MFW	2.9/B	N/C
061 Auxiliary/Emergency Feedwater		X							X			**K2.01 Power supplies to MOV's** A3.04 Automatic AFW isolation	**3.3/B** 4.2/B	**N/M** N/M
063 DC Electrical Distribution	X											K1.02 Cause/effect of DC and AC systems	3.2/B	B/C
068 Liquid Radwaste					X					X		K5.03 Units of dose and dose rate A4.03 Stop release if limits exceeded	2.6/B 3.8/B	N/C M/M
071 Waste Gas Disposal						X						K6.10 Effect of malf. on decay tanks	2.5/B	N/M
072 Area Radiation Monitoring										X		K2.01 **Deleted** A4.03 Operate source check	2.5/B 3.1/B	N/C N/M
K/A Category Point Totals:	3	1	1	1	3	3	1	1	2	3	0	Group Point Total:		19

Facility: Prairie Island	Date of Examination: 5/15/00
Examination Level (circle one): ~~RO~~ / SRO	Operating Test Number: A

Administrative Topic/Subject Description		Describe method of evaluation: 1. ONE Administrative JPM, OR 2. TWO Administrative Questions
A.1	Plant Parameter Verification	JPM RC-20 Perform Alternate Calculation of Reactor Thermal Power – 2.1.19 [3.0]
	Fuel Handling	JPM New- Direct Containment Isolation and Evacuation for **Damaged Fuel** during Fuel Handling – 2.1.20 [4.2] **JPM #00-SRO-A.1**
A.2	Tagging & Clearances	JPM New- Review a faulted I&R Closeout 2.2.13 [3.8] **JPM #00-SRO-A.2**
A.3	Perform Procedures to Reduce Exposure	JPM New- **Perform a Plant Evacuation and Aux Building Evacuation 2.3.10 [3.3]** **JPM 00-SRO-A.3** **(previous JPM replaced, no SRO administrative task)**
A.4	Emergency Action Levels and Classification	JPM Admin-4 Complete the ED Checklist for a General Emergency – 2.4.38 [4.0]

Facility: Prairie Island Date of Examination: 5/15/00
Exam Level (circle one): ~~RO / SRO(I) /~~ SRO(U) Operating Test No.: A

B.1 Control Room Systems

System / JPM Title	Type Code*	Safety Function
a. CRDS/New-01 Perform Control Rod Quarterly Exercise on **SDA**; Rod Sticks at 216 steps **JPM # 00-SRO-S.1**	MAS	1
b. ECCS/New-02 Raise #12 Accumulator Level and Vent #12 Accumulator in Response to High Pressure **JPM # 00-SRO-S.2**	MAS	3
c. AFW/AF-3/2 Cross-connect 21 MDAFWP to Unit 1 SGs and Locally Start 21 MDAFWP (PRA sig. Operator action)	**DLC**	4
d.		
e.		
f.		
g.		

B.2 Facility Walk-Through

a. CVCS/RC-8 Locally Isolate RCP Seals for Loss of All AC Power	DLR	2
b. HRPS/HC-1 Start Up Containment Hydrogen Recombiner	**DLR**	5
c.		

* Type Codes: (D)irect from bank, (M)odified from bank, (N)ew, (A)lternate path, (C)ontrol room, (S)imulator, (L)ow-Power, (R)CA

Appendix D Scenario Outline Form ES-D-1

Facility: Prairie Island Scenario No.: 2 Op-Test No.: A

Examiners: _____ Operators: _____

Initial Conditions: **(IC-10) 100%, MOC, Equil Xe; Unit 2 in Mode 1**

Turnover: [1]Emergency Diesel Gen D2 OOS for brush rigging repair (OOS 1 hr, ETR 5 hrs)
[1]MDAFWP 12 OOS for bearing replacement (OOS 4 hrs, ETR 16 hrs)
Severe thunderstorm warning in effect for southeastern Minnesota
Dispatcher requests Unit to return to 100% power this shift

Event No.	Malf. No.	Event Type*	Event Description
0	RP08A	C	Failure of Train A SI to actuate **in auto/manual requiring manual Train A CI and manual component alignment**
0	CC02B	C	[1]12 CCW Pump Fails to Start in Auto
0	RD06L	C	Shutdown Bank B Rod K-9 Sticks at Top
0			13 Cond Pump fails to start in Auto & trips when manually started **deleted**
1		N	Increase Power to 100% **deleted; replaced by swap of running condensate pumps**
2	OVRD	I	Pzr Level Control channel fails low **deleted, too many instrument malfunctions**
2	OVRD	I/R	Controlling 11 SG Steam Press Xmtr fails high, causing **11 SG PORV to open in Auto**
3	SG01A 2%	C	11 SG Tube Leak at 1 gpm, requiring shutdown, **builds in over 10 minutes**
5	FW01B	C	12 Condensate pump trip **deleted, don't need component or reactivity event**
6	OVRD RC24A	C	Controlling Pzr Pressure Xmtr fails High **deleted, too many instrument malfs and redundant to SGTR**
4	SG02A 10%	M	[2]11 SG Tube Rupture (500 gpm)
4	OVRD	C	11 SG **Safety Valve** Fails Open **(not isolable)**

* (N)ormal, (R)eactivity, (I)nstrument, (C)omponent, (M)ajor
[1] PRA significant components OOS.
[2] PRA significant sequence SGTR (7.1% CDF)

Appendix D Scenario Outline Form ES-D-1

Facility: Prairie Island Scenario No.: 3 Op-Test No.: A

Examiners: _____ Operators: _____

Initial Conditions: (IC-8) 100%, MOC, Equil Xe; Unit 2 at 100% power

Turnover: Emergency Diesel Gen D1 OOS for Injector Replacement (OOS 2 hr; ETR **8** hrs)
11 Charging Pump OOS **deleted, replace by normal op**
11 SG leak **deleted**
Severe ice storm watch in effect for southeastern Minnesota
Dispatcher expects both units to remain at 100% pending start of icing conditions

Event No.	Malf. No.	Event Type*	Event Description
0	DG07B	C	EDG D2 Auto Start Failure
0	TC01A	C	Turbine Stop Valve CV-31182 Fails to Close
0	SI05B	C	12 SI Pump fails to Start in Auto
0	RP07	C	Mechanical Failure of Rx Trip
1		**N**	**Swap Running Charging Pumps per C12.1**
2	RX07D	I	RCS Loop B T-**cold** Transmitter fails High causing rods to insert in Auto
3	**VC11**	C	Failed Open Relief Valve **replaced by charging line leak in containment**
3	EG02	C	Loss of Generator Hydrogen Cooling **deleted- do not need component malf**
3A	-	N/R	Decrease Load **deleted- do not need reactivity malf**
4	RP04B	C	**Spurious** SI Train B Actuation requiring Manual Rx Trip **using DSS**
5	RC19A 5% to 50%	C	Pzr Safety Valve Leaks at 50 lbm/hr Causing Need for Actual SI (**insert when reactor verified tripped)**
6	ED-14	C	Loss of All Offsite AC Power causing blackout until EDG D2 manually started [Insert upon SI actuation **Train A**]
7	RC-19A 100%	C	Pzr Safety Valve **leakage to maximum** [Insert 30 sec after Evt **6**]

* (N)ormal, (R)eactivity, (I)nstrument, (C)omponent, (M)ajor

Appendix D Scenario Outline Form ES-D-1

Facility: Prairie Island Scenario No.: 4 Op-Test No.: A

Examiners: _____ Operators: _____

Initial Conditions: (IC-25) **62**%, MOC, Ramping down, Xe increasing, Unit 2 in Mode **1**

Turnover: [1]Emergency Diesel Gen D1 OOS for Injector Replacement (OOS 2 hr; ETR 2 hrs)
11 Charging Pump OOS for Packing Replacement (OOS 1 hr; ETR 2 hr)
11 SG tube leak **deleted**
Severe ice storm warning in effect for southeastern Minnesota
Reducing power to 50-55% to stop 12 MFP to replace contaminated oil

Event No.	Malf. No.	Event Type*	Event Description
0	RP06	C	Failure of MSIVs to Isolate
0	FW34,33	C	TDAFWP Fails to Start in Auto, Trips on Manual Start, won't restart; (**deleted stuck x-c valve to allow recovery)**
0	DG04B	C	**Deleted D2 breaker failure- no effect, bus lock out**
0	EG01A	C	Gen Output Breaker 8H16 Fails to Open on Turbine Trip
1		**N**	**Reduce power to 55% and stop 12 MFP**
2	OVRD	I	Controlling Pzr Pressure Xmtr fails High
	OVRD	I	Controlling 11 SG Steam Flow Xmtr fails LOW **deleted- no effect on control, too many instrument failures**
	TC10	C	Turbine Control Failure **deleted- component failure not needed**
3	VC08	C	Letdown Heat Exchanger Tube Rupture to CCW requiring shift to Excess Letdown
	FW03A/B 5% to 10%	C	Slow Loss of Condenser Vacuum **deleted- unrelated problem, reactivity change not required for SRO's**
	-	N/R	Decrease Load for Controlled Shutdown **deleted, normal change done earlier**
4	MS01A 100%	M	[2]Main Steam Line Rupture inside Containment, Eventually Causing Loss of Heat Sink, Requiring **AFW x-tie**
5	ED01	M	Loss of 161 KV Bus causing Loss of Safeguards Power until CT-11 Tied in [Insert 90 seconds after Evt 6]
6	ED19	M	Fault in CT-11 Transformer **and bus 16 lockout** [Insert 60 sec after CT-11 Tied in]

* (N)ormal, (R)eactivity, (I)nstrument, (C)omponent, (M)ajor

[1] PRA significant component OOS
[2] PRA significant sequence Loss of MFW; operator action, restore MFW following a reactor trip

OPERATING TEST NO.:

Applicant Type	Evolution Type	Minimum Number	Scenario Number			
			1	2	3	4
RO	Reactivity	1				
	Normal	1				
	Instrument	2				
	Component	2				
	Major	1				
As RO	Reactivity	1				
	Normal	0				
	Instrument	1				
	Component	1				
	Major	1				
SRO-I						
As SRO	Reactivity	0				
	Normal	1				
	Instrument	1				
	Component	1				
	Major	1				
SRO-U	Reactivity	0	4	2	2	0
	Normal	1	4	1	1	1
	Instrument	1	1	2	2	2
	Component	1	2,3	3	3,4	3
	Major	1	5	4	5,6	4,5,6

Instructions: (1) Enter the operating test number and Form ES-D-1 event numbers for each evolution type.

(2) Reactivity manipulations may be conducted under normal or *controlled* abnormal conditions (refer to Section D.4.d) but must be significant per Section C.2.a of Appendix D.

Author: _____

Chief Examiner: _____

New checklist developed by the licensee, date 5/10/00 M. Sieffby Michael Beilly 5/10/00

Competencies	Applicant #1 RO/SRO-I/SRO-U				Applicant #2 RO/SRO-I/SRO-U				Applicant #3 RO/SRO-I/SRO-U			
	SCENARIO				SCENARIO				SCENARIO			
	SS 1	– 2	RO 3	LEAD 4	– 1	RO 2	LEAD 3	SS 4	RO 1	LEAD 2	SS 3	– 4
Understand and Interpret Annunciators and Alarms	1, 2, 3, 5	–	2, 3	1, 3, 4	–	2	2, 3	2, 3	1, 2, 5	2, 3	2, 3, 4	–
Diagnose Events and Conditions	1, 2, 3, 5	–	2, 3	3, 4	–	2	2, 3	2, 3	1, 2, 5	2, 3	2, 3, 4	–
Understand Plant and System Response	1, 2, 3, 5	–	2, 3	3	–	2	2, 3	2, 3	1, 2, 5	2, 3	2, 3	–
Comply With and Use Procedures (1)	1, 2, 3	–	1, 2, 3	1, 3	–	2, 3	2, 3	1, 2, 3, 4	1, 2, 4	1, 2, 3	2, 3, 4, 5, 6, 7	–
Operate Control Boards (2)	–	–	1, 2, 3	3	–	2	–	–	1, 2, 4	1	–	–
Communicate and Interact With the Crew	2, 4, 5	–	1, 2, 3	3	–	2	2, 3	1, 2, 3, 4, 5, 6	1, 2, 4	1, 2, 3	2, 3, 4, 5, 6, 7	–
Demonstrate Supervisory Ability (3)	2, 3, 4, 5	–	–	–	–	–	–	1, 2, 3, 4, 5, 6	–	–	2, 3, 4, 5, 6, 7	–
Comply With and Use Tech. Specs. (3)	3	–	–	–	–	–	–	2, 3	–	–	2, 3	–

Notes:

(1) Includes Technical Specification compliance for an RO.
(2) Optional for an SRO-U.
(3) Only applicable to SROs.

Instructions:

Circle the applicant's license type and enter one or more event numbers that will allow the examiners to evaluate every applicable competency for every applicant.

Author:
Chief Examiner:

New checklist developed by the licensee, dated 5/10/00
M. Bielby
5/10/00

Competencies	Applicant #~~1~~ 4 RO/~~SRO-I~~/(SRO-U)				Applicant #2 RO/SRO-I/SRO-U				Applicant #3 RO/SRO-I/SRO-U			
	SCENARIO				SCENARIO				SCENARIO			
	LEAD 1	SS 2	— 3	RO 4	1	2	3	4	1	2	3	4
Understand and Interpret Annunciators and Alarms	3, 5	2, 3	—	2								
Diagnose Events and Conditions	2, 3, 5	2, 3	—	2, 3								
Understand Plant and System Response	2, 3, 5	2, 3	—	2, 3								
Comply With and Use Procedures (1)	2, 3, 4	2, 3	—	1, 2								
Operate Control Boards (2)	4	—	—	1, 2								
Communicate and Interact With the Crew	3, 4	1, 2, 3, 4	—	1, 2, 3								
Demonstrate Supervisory Ability (3)	—	1, 2, 3, 4	—	—								
Comply With and Use Tech. Specs. (3)	—	2, 3	—	—								

Notes:

(1) Includes Technical Specification compliance for an RO.
(2) Optional for an SRO-U.
(3) Only applicable to SROs.

Instructions:

Circle the applicant's license type and enter one or more event numbers that will allow the examiners to evaluate every applicable competency for every applicant.

Author: _____

Chief Examiner: _____

Northern States Power Company

1660 Wakonade Dr. E.
Welch, MN 55089
Telephone (651) 388-1165 x5031

April 17, 2000

Mr. Michael Bielby
Chief Examiner
US NRC Region III
801 Warrenville Road
Lisle, IL 60532-4351

Dear Mr. Bielby:

Enclosed is the update Simulator Evaluation B with the changes as directed. The material replaces the originally submitted scenario, references and outline for Scenario B only for the May Prairie Island SRO upgrade exam. In accordance with ES-201 Attachment 1, this material should be withheld from public disclosure until the examinations are complete.

John Kempkes

attachments: 0

encl: 1) Updated examination outline page
2) Operating exam Scenario B update

Northern States Power Company

1660 Wakonade Dr. E.
Welch, MN 55089
Telephone (651) 388-1165 x5031

April 27, 2000

Mr. Michael Bielby
Chief Examiner
US NRC Region III
801 Warrenville Road
Lisle, IL 60532-4351

Dear Mr. Bielby:

Enclosed is a portion of the examination material for the May 2000 SRO Upgrade examination at Prairie Island. In accordance with ES-201 Attachment 1, this material should be withheld from public disclosure until the examinations are complete. The material enclosed has been reviewed during the week of April 23-27 at PITC. Additional material (final written, QA forms, etc) will be mailed at a later date.

John Kempkes

attachments: 0

encl: 1) Updated scenarios (2)
2) Updated JPM set (10 JPM's)

INITIAL SUBMITTAL OF THE WRITTEN EXAMINATION

FOR THE PRAIRIE ISLAND INITIAL EXAMINATION THE WEEK OF MAY 15, 2000

*QNUM 1
*QHISTORY New
*EXAM TYPE NRC
*QDATE 5/15/00
*FACILITY 282 Prairie Island
*RTYP PWR-WEC-2
*EXLEVEL S
*AUTHOR Sonalysts, Inc.
*TIER EAPE
*KA 001AA1.04
*KAVRO 3.8
*KAVSRO 3.6
*QUESTION
Given the following conditions on Unit 2:

- The plant was stable at 40% power and Tavg on program when a failure resulted in a continuous rod withdrawal.
- Control Bank D (CBD) started withdrawing at 72 steps/minute in Auto.
- The rod withdrawl was terminated after about 10 seconds by the operator.
- Normal boration is not available.
- Charging flow is 27 gpm to the regenerative HX.
- The Rod Control system engineer wants rod control left as is until he can record data.

The Reactor Operator is directed to use MV-32189, Emergency Boration to Charging Pump Suction, to restore Tavg to program. Which of the following describes the actions taken to establish 12 gpm boric acid flow per C12.5 AOP1, Emergency Boration of the Reactor Coolant System?

*A. BATP speed to SLOW, start BATP, recirculation valve to 50%, open MV-32189.

*B. BATP speed to SLOW, start BATP, recirculation valve to 100%, open MV-32189.

*C. BATP speed to FAST, start BATP, recirculation valve to 50%, open MV-32189.

*D. BATP speed to FAST, start BATP, recirculation valve to 100%, open MV-32189.

*ANSWER C
*COGNITIVE Memory
*REFSPECIFIC C12.5 AOP1, steps 2.4.1 to 2.4.3
*MODULE P8184L-005
*OBJECTIVE 12
*ABASIS Incorrect, BATP to FAST.
*BBASIS Incorrect, BATP to FAST and recirc to 50%.
*CBASIS Correct, per reference.
*DBASIS Incorrect, recirc to 50%.
*CFRBASIS 10CFR55.43(b)(5) Assessment of facility conditions and selection of appropriate procedures.

*QNUM 2
*QHISTORY New
*EXAM TYPE NRC
*QDATE 5/15/00
*FACILITY 282 Prairie Island
*RTYP PWR-WEC-2
*EXLEVEL B
*AUTHOR Sonalysts, Inc.
*TIER EAPE
*KA 003AK1.17
*KAVRO 2.9
*KAVSRO 3.1
*QUESTION
Given the following conditions on Unit 1:

- The plant is stable at 100% power with rod control in Manual.
- The core is nearing the end-of-cycle with boron concentration at 183 ppm.

ONE Shutdown Bank B (SBB) rod drops to the core bottom, and neither an automatic trip nor operator response action occur immediately. Which of the following describes the INITIAL effect on the Doppler (Fuel Temperature) Coefficient?

The Doppler (Fuel Temperature) Coefficient becomes...

*A. More negative because fuel temperatures are lower.

*B. Less negative because fuel temperatures are lower.

*C. More negative because Moderator Temperature Coefficient is more negative.

*D. Less negative because Moderator Temperature Coefficient is more negative.

*ANSWER A
*COGNITIVE Analysis
*REFSPECIFIC PWR Reactor Theory Chapter 4 pages 12-13 (General Physics Rev 1).
*MODULE P8188L-013
*OBJECTIVE #3
*ABASIS Correct, dropped rod decreases reactor power, which drops fuel temperatures, thereby making FTC more negative.
*BBASIS Incorrect, fuel temps will be lower, which makes FTC more negative.
*CBASIS Incorrect, MTC value does not directly affect FTC value.
*DBASIS Incorrect, MTC value does not directly affect FTC value.
*CFRBASIS N/A

*QNUM 3
*QHISTORY Modified from Bank #P8184L-005 022
*EXAM TYPE NRC
*QDATE 5/15/00
*FACILITY 282 Prairie Island
*RTYP PWR-WEC-2
*EXLEVEL S
*AUTHOR Sonalysts, Inc.
*TIER EAPE
*KA 005AK3.02
*KAVRO 3.6
*KAVSRO 4.2
*QUESTION
Given the following conditions on Unit 1:

- During a load increase from 60% power, control rod C-7 IRPI (CBD) position did not change with bank demand.
- Annunciator 47013:0507, "COMPUTER ALARM ROD DEVIATION/SEQUENCING" was received.
- The reactor was stabilized at 78% power with rod control in Manual and Control Bank D (CBD) step counter at 184 steps.
- SP 1319 has determined that CBD rod C-7 is misaligned.
- 1C5 AOP5, "Misaligned Rod, Stuck Rod, And/Or RPI Failure or Drift," has determined rod C-7 to be stuck.

Refer to the attached pages from the Core Operating Limits Report.

The reactor will be operating within its operating limits if...

*A. Reactor power is reduced to <54% and CBD rods remain at current height.

*B. Reactor power is reduced to <72% and CBD rods are maintained at 218 steps.

*C. Reactor power remains at 78% and CBD rods remain at current height.

*D. Reactor power is raised to 100% and CBD rods are maintained at 218 steps.

*ANSWER A
*COGNITIVE Analysis
*REFSPECIFIC TS 3.10.G.4 and COLR, Fig 6.
*MODULE P8184L-005
*OBJECTIVE 12
*ABASIS Correct, 182 steps is >20% inserted and is acceptable at <54% core power; per TS 3.10.G.1, a stuck rod must be declared inoperable and new RIL applied.
*BBASIS Incorrect, 72% power would require rods 0% inserted (228 steps).
*CBASIS Incorrect, distractor for if rod is not declared inoperable
*DBASIS Incorrect, cannot have power >72% with one inoperable rod..
*CFRBASIS 10 CFR 55.43(b)(2) Limitations in Technical Specifications.

*QNUM 4
*QHISTORY Modified from Bank #P8197L-012 026
*EXAM TYPE NRC
*QDATE 5/15/00
*FACILITY 282 Prairie Island
*RTYP PWR-WEC-2
*EXLEVEL B
*AUTHOR Sonalysts, Inc.
*TIER EAPE
*KA 011EK2.02
*KAVRO 2.6
*KAVSRO 2.7
*QUESTION

For a large-break LOCA such as the double-ended shear of an RCS cold leg crossover pipe, which of the following may result from continued RCP operation after the RCP tripping criteria are met?

*A. Excessive mass loss out the break.

*B. Cavitation in the RCP on the broken RCS loop.

*C. Cavitation in the RCP on the intact RCS loop.

*D. Degradation/damage of the RCP #1 seals.

*ANSWER D
*COGNITIVE Memory
*REFSPECIFIC E-1 step 2 basis.
*MODULE P8197L-012
*OBJECTIVE 19
*ABASIS Incorrect, per reference.
*BBASIS Incorrect, per reference.
*CBASIS Incorrect, per reference.
*DBASIS Correct, per reference.
*CFRBASIS N/A

*QNUM 5
*QHISTORY New
*EXAM TYPE NRC
*QDATE 5/15/00
*FACILITY 282 Prairie Island
*RTYP PWR-WEC-2
*EXLEVEL S
*AUTHOR Sonalysts, Inc.
*TIER EAPE
*KA W/E04EK2.02
*KAVRO 3.8
*KAVSRO 4.0
*QUESTION
Which of the following systems is considered to be the most likely location for a rupture or break outside containment, and therefore is the only system verified to be isolated during ECA-1.2, "LOCA Outside Containment"?

*A. Normal Letdown

*B. RCP Seal Injection

*C. RCP Seal Water return

*D. Residual Heat Removal

*ANSWER D
*COGNITIVE Memory
*REFSPECIFIC ECA-1.2, pg. 3 and Background.
*MODULE P8197L-012
*OBJECTIVE 2
*ABASIS Incorrect, per reference.
*BBASIS Incorrect, per reference.
*CBASIS Incorrect, per reference.
*DBASIS Correct, per reference.
*CFRBASIS 10 CFR 55.43(b)(5) Selection of appropriate procedures during emergency situations.

*QNUM 6
*QHISTORY Modified from Bank #P8197L-011 074
*EXAM TYPE NRC
*QDATE 5/15/00
*FACILITY 282 Prairie Island
*RTYP PWR-WEC-2
*EXLEVEL S
*AUTHOR Sonalysts, Inc.
*TIER EAPE
*KA W/E01EK3.04
*KAVRO 3.3
*KAVSRO 3.6
*QUESTION
Given the following conditions on Unit 1:

- The plant was stable at 100% power.
- A reactor trip and safety injection actuation have occurred.
- The crew has transitioned out of E-0.

Which of the following is a situation where a transition to ES-0.0, "Rediagnosis," should be implemented?

*A. During ES-0.2, "SI Termination," SI pumps must be started due to a loss of subcooling.

*B. During FR-P.1, "Response to Imminent Pressurized Thermal Shock Conditions," the Integrity safety function turns Yellow, but the end of FR-P.1 has NOT been reached.

*C. During E-3, "Steam Generator Tube Rupture," the crew believes a small-break LOCA is occurring rather than a SG tube rupture.

*D. During FR-C.1, "Response to Inadequate Core Cooling," the crew is directed to keep repeating a series of steps and appears to be making NO progress toward correcting the Core Cooling problem.

*ANSWER C
*COGNITIVE Comprehension
*REFSPECIFIC 1ES-0.0 summary basis.
*MODULE P8197L-011
*OBJECTIVE 7
*ABASIS Incorrect, no procedure directs transition to ES-0.0.
*BBASIS Incorrect, per reference.
*CBASIS Correct, per reference.
*DBASIS Incorrect, per reference.
*CFRBASIS 10 CFR 55.43(b)(5) Selection of appropriate procedures.

*QNUM 7
*QHISTORY Modified from Bank #8170L-002 009
*EXAM TYPE NRC
*QDATE 5/15/00
*FACILITY 282 Prairie Island
*RTYP PWR-WEC-2
*EXLEVEL B
*AUTHOR Sonalysts, Inc.
*TIER EAPE
*KA 015AK2.08
*KAVRO 2.6
*KAVSRO 2.6
*QUESTION

According to C14 AOP1, "Loss of Component Cooling," if component cooling flow is lost to an RCP, which of the following conditions requires the operator to immediately trip the reactor and the affected RCP?

*A. Motor lower guide bearing temperature reaches 190°F.

*B. Pump radial bearing temperature reaches 200°F.

*C. Motor stator winding temperature reaches 220°F.

*D. #1 seal outlet temperature reaches 190°F.

*ANSWER B
*COGNITIVE Memory
*REFSPECIFIC C14 AOP1, pg. 4.
*MODULE P8172L-002
*OBJECTIVE 7
*ABASIS Incorrect, 200°F is determinant.
*BBASIS Correct, per reference.
*CBASIS Incorrect, per reference.
*DBASIS Incorrect, per reference and 1C3 AOP2.
*CFRBASIS N/A

*QNUM 8
*QHISTORY Bank # P8197L-011 075
*EXAM TYPE NRC
*QDATE 5/15/00
*FACILITY 282 Prairie Island
*RTYP PWR-WEC-2
*EXLEVEL S
*AUTHOR Sonalysts, Inc.
*TIER EAPE
*KA W/E10EK2.01
*KAVRO 3.3
*KAVSRO 3.5
*QUESTION
Which of the following is the reason that ES-0.4, "Natural Circulation Cooldown with Steam Void in Vessel," requires RVLIS full range indication to be maintained greater than 84% during the RCS cooldown?

*A. To ensure adequate core cooling by keeping the fuel covered.

*B. To prevent disrupting natural circulation flow due to voids entering the steam generator tubes.

*C. To ensure the core exit thermocouples stay covered for accurate indication of RCS subcooling.

*D. To prevent uncovering the pressurizer heaters, which would cause difficult pressure control.

*ANSWER B
*COGNITIVE Memory
*REFSPECIFIC ES-0.4 Basis, pg. 3.
*MODULE P8197L-011
*OBJECTIVE 18
*ABASIS Incorrect, per reference.
*BBASIS Correct, per reference.
*CBASIS Incorrect, per reference.
*DBASIS Incorrect, per reference.
*CFRBASIS 10 CFR 55.43(b)(5) Basis for appropriate procedures during emergency situations.

*QNUM 9
*QHISTORY New
*EXAM TYPE NRC
*QDATE 5/15/00
*FACILITY 282 Prairie Island
*RTYP PWR-WEC-2
*EXLEVEL S
*AUTHOR Sonalysts, Inc.
*TIER EAPE
*KA 024AK3.01
*KAVRO 4.1
*KAVSRO 4.4
*QUESTION
Which of the following is a situation in which Emergency Boration is required to be used per C12.5 AOP1, "Emergency Boration of the RCS"?

*A. ES-0.1, "Reactor Trip Recovery," has been implemented and two control rods are NOT fully inserted.

*B. FR-S.1, "Response to Nuclear Power Generation/ATWS," has been implemented and immediate actions have been completed.

*C. Boration of the RCS at 12 gpm is desired with maximum available charging pump flow of 15 gpm.

*D. Boration of the RCS at 12 gpm is desired with the Boric Acid Flow counter isolated for replacement.

*ANSWER D
*COGNITIVE Comprehension
*REFSPECIFIC C12.5 AOP1, pg. 2.
*MODULE P8172L-001a
*OBJECTIVE 9
*ABASIS Incorrect, per ES-0.1.
*BBASIS Incorrect, per FR-S.1.
*CBASIS Incorrect, per Note on reference that indicates BA flow shall not exceed 75% of total charging flow.
*DBASIS Correct, isolation of BA flow counter isolates BA to blender and makes normal boration non-functional.
*CFRBASIS 10CFR55.43(b)(5) Assessment of facility conditions and selection of appropriate procedures.

*QNUM 10
*QHISTORY New
*EXAM TYPE NRC
*QDATE 5/15/00
*FACILITY 282 Prairie Island
*RTYP PWR-WEC-2
*EXLEVEL S
*AUTHOR Sonalysts, Inc.
*TIER EAPE
*KA 026AG2.1.33
*KAVRO 3.4
*KAVSRO 4.0
*QUESTION
Given the following conditions:

- Unit 1 and 2 are stable at 100% power.
- 11 Component Cooling (CC) Pump was taken out of service one hour ago to replace a bad bearing.

Which of the following inoperabilities, if it were to occur now, would require action to be initiated within one hour to place at least one Unit in Hot Shutdown within 6 hours?

*A. 11 CC heat exchanger.

*B. D1 Diesel Generator.

*C. 121 Cooling Water Pump.

*D. 12 CC heat exchanger.

*ANSWER D
*COGNITIVE Comprehension
*REFSPECIFIC T.S. 3.3.C.2, TSI 3.3-14
*MODULE P8172L-002
*OBJECTIVE 8
*ABASIS Incorrect, already declared OOS per TSI 3.3-14.
*BBASIS Incorrect, same train as 11 CC pump and HX, opposite train ESF still operable.
*CBASIS Incorrect, not required TS unless a DDCLP was OOS and it was a safeguards replacement.
*DBASIS Correct, 11 CC HX must be declared OOS per TSI 3.3-14 and TS 3.3.C.2.b.(2) entered (72 hr LCO for 11 HX). One additional CC HX inoperable would result in entry into TS 3.0.C.
*CFRBASIS 10 CFR 55.43(b)(2) Limitations in the Technical Specifications.

*QNUM 11
*QHISTORY New
*EXAM TYPE NRC
*QDATE 5/15/00
*FACILITY 282 Prairie Island
*RTYP PWR-WEC-2
*EXLEVEL S
*AUTHOR Sonalysts, Inc.
*TIER EAPE
*KA 029EA2.01
*KAVRO 4.4
*KAVSRO 4.7
*QUESTION

Unit 1 personnel are responding to a failure of the reactor to trip.

-ERCS has failed.
-You are directed to implement Critical Safety Function status tree monitoring manually per F-0.

Which of the following results in meeting the requirements for a RED path priority on Subcriticality?

*A. Startup rate on N35 or N36 exceeds +0.4 dpm.

*B. Startup rate on N51 or N52 exceeds +0.4 dpm.

*C. Reactor power on N41, N42, N43 or N44 exceeds 5%.

*D. Reactor power on N51 or N52 exceeds 5%.

*ANSWER D
*COGNITIVE Memory
*REFSPECIFIC F-0.1
*MODULE P8197L-014
*OBJECTIVE 1
*ABASIS Incorrect, F-0 uses N51 and N52.
*BBASIS Incorrect, SUR can only result in an ORANGE path.
*CBASIS Incorrect, F-0 uses N51 and N52.
*DBASIS Correct, per reference status tree.
*CFRBASIS 10 CFR 55.43(b)(5) Selection of appropriate procedures. KA is labeled 43.5.

*QNUM 12
*QHISTORY Modified from Bank #P8197L-012 011
*EXAM TYPE NRC
*QDATE 5/15/00
*FACILITY 282 Prairie Island
*RTYP PWR-WEC-2
*EXLEVEL S
*AUTHOR Sonalysts, Inc.
*TIER EAPE
*KA W/E12EK2.02
*KAVRO 3.6
*KAVSRO 3.9
*QUESTION
The following conditions exist on Unit 1:

- A reactor trip and Safety Injection have occurred from 100% power.
- ECA-2.1, "UNCONTROLLED DEPRESSURIZATION OF BOTH STEAM GENERATORS," is being performed.
- Both steam generator (SG) pressures are decreasing uncontrollably.
- Containment pressure indicates 6 psig, increasing.
- Feed flow to each SG has been throttled to 40 gpm.

Which of the following situations would require increasing the feed flow to each SG to more than 40 gpm?

*A. The cooldown rate of the RCS cold legs is greater than 100°F/hr.

*B. The narrow-range level in both SGs is greater than 10%.

*C. The RCS hot leg temperatures are increasing.

*D. To establish feed flow of 200 gpm until WR level in one SG is greater than Attachment E.

*ANSWER C
*COGNITIVE Comprehension
*REFSPECIFIC ECA-2.1, pg. 3 and Basis, pg. 2.
*MODULE P8197L-012
*OBJECTIVE 15
*ABASIS Incorrect, throttled to get CDR <100 degF/hr.
*BBASIS Incorrect, would allow stopping AFW but would not require increasing flow.
*CBASIS Correct, per reference; feed flow can be controlled (increased) to keep T-hot from increasing.
*DBASIS Incorrect, this is done for an intact SG.
*CFRBASIS 10 CFR 55.43(b)(5) Assessment of facility conditions and selection of appropriate procedures.

*QNUM 13
*QHISTORY Modified from Bank #P8197L-014 002
*EXAM TYPE NRC
*QDATE 5/15/00
*FACILITY 282 Prairie Island
*RTYP PWR-WEC-2
*EXLEVEL S
*AUTHOR Sonalysts, Inc.
*TIER EAPE
*KA W/E08EK2.02
*KAVRO 3.6
*KAVSRO 4.0
*QUESTION
A steam line break accident and subsequent cooldown results in plant operation to the left of Limit A (in the "red" area) on F-0.4, "Integrity CSF." Which of the following describes the potential consequences to the reactor vessel?

*A. Fatigue stresses from the rapid cooldown may limit vessel lifetime.

*B. Failure of the vessel could occur, since the nil-ductility temperature increases with increasing pressure.

*C. An existing flaw could grow and may lead to a loss of vessel integrity.

*D. It may result in creation of a flaw in the beltline region of the vessel wall.

*ANSWER C
*COGNITIVE Memory
*REFSPECIFIC F-0.4 Basis, pg. 1; 2FR-P.1 basis, summary.
*MODULE P8197L-014.
*OBJECTIVE 22
*ABASIS Incorrect, major concern is brittle fracture.
*BBASIS Incorrect, per reference; NDT does NOT vary with pressure.
*CBASIS Correct, per reference.
*DBASIS Incorrect, concern is growth of existing flaws.
*CFRBASIS 10 CFR 55.43(b)(5) Assessment of facility conditions and selection of appropriate procedures.

*QNUM 14
*QHISTORY New
*EXAM TYPE NRC
*QDATE 5/15/00
*FACILITY 282 Prairie Island
*RTYP PWR-WEC-2
*EXLEVEL B
*AUTHOR Sonalysts, Inc.
*TIER EAPE
*KA 051AK3.01
*KAVRO 2.8
*KAVSRO 3.1
*QUESTION
The steam dump system permissive interlock requires inputs from both main condenser pressures and circulating water pump (CWP) motor breaker positions. Which of the following states the condenser vacuum conditions required to satisfy the condenser portion of the interlock and the reason?

*A. Either A or B condenser at 16" Hg vacuum; ensures steam dump operability is maintained with one CWP motor breaker open.

*B. Both A and B condensers at 16" Hg vacuum; protects the condensers from overpressure if the one required CWP does NOT have power.

*C. Either A or B condenser at 16" Hg vacuum; protects the associated condenser from overpressure if both CWPs do NOT have power.

*D. Both A and B condensers at 16" Hg vacuum; ensures steam dump operability is maintained with both CWP motor breakers open.

*ANSWER B
*COGNITIVE Memory
*REFSPECIFIC P8174L-002, pg. 12.
*MODULE P8174L-002
*OBJECTIVE 7
*ABASIS Incorrect, per reference.
*BBASIS Correct, per reference.
*CBASIS Incorrect, per reference.
*DBASIS Incorrect, per reference.
*CFRBASIS N/A

*QNUM 15
*QHISTORY New
*EXAM TYPE NRC
*QDATE 5/15/00
*FACILITY 282 Prairie Island
*RTYP PWR-WEC-2
*EXLEVEL S
*AUTHOR Sonalysts, Inc.
*TIER EAPE
*KA 055EG2.2.03
*KAVRO 3.1
*KAVSRO 3.3
*QUESTION
Which of the following is the reason that the overall safety margin of both units is reduced more for a loss of buses 25 and 26 on Unit 2 than for a loss of buses 15 and 16 on Unit 1?

*A. Screenhouse safeguards power is only available from Unit 2.

*B. Two instrument air compressors are powered from Unit 2.

*C. 121 cooling water pump Bus 27 is supplied from the Unit 2 Safeguards buses.

*D. Unit 1 Diesel Generators cannot adequately power all Unit 2 Safeguards loads.

*ANSWER C
*COGNITIVE Comprehension
*REFSPECIFIC P8186L-008, pg. 10.
*MODULE P8186L-008
*OBJECTIVE 1
*ABASIS Incorrect, may be swapped between units for screenhouse safeguards loads.
*BBASIS Incorrect, U-1 powers 2 of 3 compressors.
*CBASIS Correct, Loss of 121 Cooling Water Pump reduces safety margin more on an SBO on Unit 2.
*DBASIS Incorrect, crosstie is available.
*CFRBASIS 10 CFR 55.43(b)(1) Limitations in the facility license.

*QNUM 16
*QHISTORY New
*EXAM TYPE NRC
*QDATE 5/15/00
*FACILITY 282 Prairie Island
*RTYP PWR-WEC-2
*EXLEVEL B
*AUTHOR Sonalysts, Inc.
*TIER EAPE
*KA 057AA1.05
*KAVRO 3.2
*KAVSRO 3.4
*QUESTION
With Unit 1 at 100% power and rod control in Auto, a loss of power from Instrument Bus 114 to Power Range NI (PRNI) channel N44 occurred. The Lead Operator takes a Power Mismatch switch to BYPASS PR N44 position.

What effect does this have on the NI control signal inputs?

*A. Channel N44 input to the High Flux Rod Stop circuit is defeated.

*B. Channel N44 input to the NI Power Auctioneering unit is defeated.

*C. Channel N44 input to the Power Averaging circuit is defeated, the circuit counts the N42 input twice when averaging it with the N41 and N43 inputs.

*D. Channel N44 input to the Power Averaging circuit is defeated, the circuit averages the N41, N42 and N43 inputs alone.

*ANSWER C
*COGNITIVE Memory
*REFSPECIFIC P8184L-002, pg. 38.
*MODULE P8184L-002
*OBJECTIVE 14
*ABASIS Incorrect, rod stop bypass switch performs this function.
*BBASIS Incorrect, auctioneered high power output is not affected by a 0% input.
*CBASIS Correct, paired channel (N42) output is doubled and division by 4 is retained.
*DBASIS Incorrect, paired channel is doubled.
*CFRBASIS N/A

*QNUM 17
*QHISTORY Modified from Bank #P8186L-015 004
*EXAM TYPE NRC
*QDATE 5/15/00
*FACILITY 282 Prairie Island
*RTYP PWR-WEC-2
*EXLEVEL B
*AUTHOR Sonalysts, Inc.
*TIER EAPE
*KA 057AA2.19
*KAVRO 4.0
*KAVSRO 4.3
*QUESTION
Given the following conditions on Unit 1:

- The reactor is at 8% power during a plant startup.
- All control systems are in the required conditions for this point in the startup.

If vital instrument bus 111 (White bus) is mistakenly shifted to the Alternate AC Power source, Panel 117, which of the following describes the resulting plant response and reason?

*A. The reactor does NOT trip because power is still below P-10.

*B. The reactor does NOT trip because power is above P-6.

*C. A reactor trip occurs because PRNI channel N41 momentarily deenergizes.

*D. A reactor trip occurs because IRNI channel N36 momentarily deenergizes.

*ANSWER D
*COGNITIVE Comprehension
*REFSPECIFIC P8184L-002, pg. 22; P8186L-015, pg. 11.
*MODULE P8184L-002
*OBJECTIVE 6
*ABASIS Incorrect, IR reactor trips are active.
*BBASIS Incorrect, N35 off red bus, 1 of 2 logic for IR trip
*CBASIS Incorrect, PR trips 2/4 logic.
*DBASIS Correct, N36 is powered from Bus 111, which is deenergized when transfer to Panel 117 is executed.
*CFRBASIS N/A

*QNUM 18
*QHISTORY New
*EXAM TYPE NRC
*QDATE 5/15/00
*FACILITY 282 Prairie Island
*RTYP PWR-WEC-2
*EXLEVEL S
*AUTHOR Sonalysts, Inc.
*TIER EAPE
*KA 059AK3.01
*KAVRO 3.5
*KAVSRO 3.9
*QUESTION
Given the following conditions on Unit 1:

- The plant is operating at 100% power.
- A Liquid Waste Discharge Permit has been approved for 121 ADT Monitor Tank
- 121 ADT Monitor Tank is being discharged to the river.
- Halfway through the ADT Monitor Tank discharge it is noted that the SG Blowdown Monitor Tank (SGBMT) level is also decreasing steadily.
- No alarms have been received on Common Discharge Header radiation monitor R-18 or SG Blowdown Header radiation monitor 1R-19.

Which of the following states the action that should be taken, if any, and the reason?

The discharge should be:

*A. Continued, because R-18 and 1R-19 have NOT alarmed.

*B. Continued, because SGBMT level normally decreases with ADT Monitor Tank level and 1R-19 has NOT alarmed.

*C. Stopped, because the SGBMT has NOT been sampled to authorize the release.

*D. Stopped, because the level of radioactivity in the SGBMT is normally higher than in the ADT Monitor Tank.

*ANSWER C
*COGNITIVE Comprehension
*REFSPECIFIC ODCM Table 2.1
*MODULE P8182L-001A
*OBJECTIVE 4
*ABASIS Incorrect, R-18 setpoint partly determined by tank sample results.
*BBASIS Incorrect, R-19 not in SGBMT discharge path.
*CBASIS Correct, ODCM Table 2.1 requires sampling of tanks prior to a batch release.
*DBASIS Incorrect, radioactivity in the SGBMT is normally lower than in the ADMT.
*CFRBASIS 10 CFR 55.43(b)(2) Limitations in Technical Specifications.

*QNUM 19
*QHISTORY New
*EXAM TYPE NRC
*QDATE 5/15/00
*FACILITY 282 Prairie Island
*RTYP PWR-WEC-2
*EXLEVEL S
*AUTHOR Sonalysts, Inc.
*TIER EAPE
*KA 062AA1.01
*KAVRO 3.1
*KAVSRO 3.1
*QUESTION
During a long period of hot summer days, river and CL temperatures rise steadily. Which of the following CL temperatures is the highest that would not result in declaring safety systems inoperable?

*A. 79 degF.

*B. 84 degF

*C. 89 degF

*D. 94 degF

*ANSWER D
*COGNITIVE Memory
*REFSPECIFIC C35 limitation 4.1.3
*MODULE P8176L-003
*OBJECTIVE 11
*ABASIS Incorrect, below design temperature.
*BBASIS Incorrect, CL design temperature but can exceed per limitation 4.1.3.
*CBASIS Incorrect, per reference.
*DBASIS Correct, safety evaluation proved operability up to 95 degF, expected to exceed 85 degF only 1% or less of the year.
*CFRBASIS 10CFR55.43(b)(5) Assessment of facility conditions and selection of appropriate procedures.

*QNUM 20
*QHISTORY Modified from Bank #P8178L-002 001
*EXAM TYPE NRC
*QDATE 5/15/00
*FACILITY 282 Prairie Island
*RTYP PWR-WEC-2
*EXLEVEL B
*AUTHOR Sonalysts, Inc.
*TIER EAPE
*KA 067AK3.01
*KAVRO 2.3
*KAVSRO 2.8
*QUESTION
Which of the following types of fire detectors responds to invisible combustion particles?

*A. Thermal expansion detectors

*B. Photoelectric detectors

*C. Ionization detectors

*D. Heat-activated pressure rise detectors

*ANSWER C
*COGNITIVE Memory
*REFSPECIFIC B31B, pg. 4.
*MODULE P8178L-002
*OBJECTIVE 6
*ABASIS Incorrect, per reference.
*BBASIS Incorrect, per reference.
*CBASIS Correct, per reference.
*DBASIS Incorrect, per reference.
*CFRBASIS N/A

*QNUM 21
*QHISTORY New
*EXAM TYPE NRC
*QDATE 5/15/00
*FACILITY 282 Prairie Island
*RTYP PWR-WEC-2
*EXLEVEL B
*AUTHOR Sonalysts, Inc.
*TIER EAPE
*KA 068AA1.28
*KAVRO 3.8
*KAVSRO 4.0
*QUESTION
The control room is being evacuated due to a fire per F5 Appendix B.

Which of the following LOCAL actions "back up" the actions taken prior to leaving the control room by the operators?

*A. Trip of 1R source to Bus 15

*B. Starting 22 charging pump in LOCAL

*C. Manually starting 12 Diesel Cooling Water Pump

*D. Deenergization of PORV solenoids at the DC panel

*ANSWER D
*COGNITIVE Memory
*REFSPECIFIC F5 App B, pg. 5, 6
*MODULE P8197L-009
*OBJECTIVE 4
*ABASIS Incorrect, per reference.
*BBASIS Incorrect, per reference.
*CBASIS Incorrect, per reference.
*DBASIS Correct, CR action is to close PORV block valves to prevent RCS inventory loss.
*CFRBASIS N/A

*QNUM 22
*QHISTORY New
*EXAM TYPE NRC
*QDATE 5/15/00
*FACILITY 282 Prairie Island
*RTYP PWR-WEC-2
*EXLEVEL S
*AUTHOR Sonalysts, Inc.
*TIER EAPE
*KA W/E14EK1.03
*KAVRO 3.3
*KAVSRO 3.6
*QUESTION
Which of the following Functional Response procedures directs the crew to "Return to Procedure and Step in Effect" even if the Red Path initiating indication is still in a Red Path condition?

*A. FR-C.1, "Response to Inadequate Core Cooling."

*B. FR-Z.1, "Response to High Containment Pressure."

*C. FR-H.1, "Response to Loss of Secondary Heat Sink."

*D. FR-S.1, "Response to Nuclear Power Generation/ATWS."

*ANSWER B
*COGNITIVE Memory
*REFSPECIFIC P8197L-014, pg. 37.
*MODULE P8197L-014
*OBJECTIVE 31
*ABASIS Incorrect, per FR-C.1.
*BBASIS Correct, per reference.
*CBASIS Incorrect, per FR-H.1.
*DBASIS Incorrect, per FR-S.1.
*CFRBASIS 10CFR55.43(b)(5) Assessment of facility conditions and selection of appropriate procedures.

*QNUM 23
*QHISTORY Modified from Bank #P8197L-014 003
*EXAM TYPE NRC
*QDATE 5/15/00
*FACILITY 282 Prairie Island
*RTYP PWR-WEC-2
*EXLEVEL S
*AUTHOR Sonalysts, Inc.
*TIER EAPE
*KA 074EA2.08
*KAVRO 3.8
*KAVSRO 4.6
*QUESTION
Given the following conditions on Unit 1:

- After a plant accident, the crew has implemented FR-C.1, "Response to Inadequate Core Cooling."
- Steam is being dumped at the maximum rate.
- 11 SG pressure is 200 psig, while 12 SG is at 190 psig.
- RCS hot leg temperatures are 416°F with RCS pressure at 322 psig.
- Average CETC temperature is 455°F.

When should the crew first stop dumping steam under these conditions?

*A. When SG pressures are < 170 psig and average CETC's are < 750°F

*B. When SG pressures are < 170 psig and RCS Thot's are < 400°F

*C. When SG pressures are at atmospheric and average CETC's are < 750°F

*D. When SG pressures are at atmospheric and RCS Thot's are < 350°F

*ANSWER B
*COGNITIVE Comprehension
*REFSPECIFIC FR-C.1 step 11.
*MODULE P8197L-014
*OBJECTIVE 13
*ABASIS Incorrect, CETC's < 750°F does not allow transition out of FR-C.1 or stopping steam dumping.
*BBASIS Correct, the first stopping point will be SG pressures < 170 psig and RCS Thot's < 400°F, where accumulators are isolated
*CBASIS Incorrect, these conditions would not be reached first.
*DBASIS Incorrect, these conditions would stop the second phase of steam dumping.
*CFRBASIS 10CFR55.43(b)(5) Assessment of facility conditions and selection of appropriate procedures.

*QNUM 24
*QHISTORY New
*EXAM TYPE NRC
*QDATE 5/15/00
*FACILITY 282 Prairie Island
*RTYP PWR-WEC-2
*EXLEVEL S
*AUTHOR Sonalysts, Inc.
*TIER EAPE
*KA 076AG2.3.08
*KAVRO 2.3
*KAVSRO 3.2
*QUESTION
A planned gaseous radioactive release is to occur on August 1. Which of the following is a disallowed wind direction for making the release AND the reason this wind direction is disallowed?

*A. From 328°; to prevent vented gas particulates from settling directly into the river.

*B. From 358°; to prevent vented gas from entering the river by cooling tower scrubbing.

*C. From 148°; to prevent vented gas particulates from settling directly into the river.

*D. From 178°; to prevent vented gas from entering the river by cooling tower scrubbing.
*ANSWER B
*COGNITIVE Comprehension
*REFSPECIFIC ODCM, pg. 26; P8182L-001C, pg. 25.
*MODULE P8182L-001C
*OBJECTIVE 7
*ABASIS Incorrect, incorrect direction.
*BBASIS Correct, 358°T is within the sector 355°T - 045°T and cooling towers are required operating at this time of year.
*CBASIS Incorrect, incorrect direction.
*DBASIS Incorrect, incorrect direction.
*CFRBASIS 10 CFR 55.43(b)(2) Limitations in the Technical Specifications.

*QNUM 25
*QHISTORY Modified from Bank #P8174L-003 014
*EXAM TYPE NRC
*QDATE 5/15/00
*FACILITY 282 Prairie Island
*RTYP PWR-WEC-2
*EXLEVEL B
*AUTHOR Sonalysts, Inc.
*TIER EAPE
*KA 007EA1.02
*KAVRO 3.8
*KAVSRO 3.7
*QUESTION
Given the following conditions on Unit 1:

- The plant was stable at 100% power.
- A malfunction of the 12 SG level control system caused overfeeding of 12 SG and a reactor trip due to Power Range NI high flux.
- After the trip, RCS Tavg decreased to 553°F and 12 SG level increased to 64% before 12 SG feed regulating valve (FRV) closed.
- After 12 SG FRV closed, 12 SG level and RCS loop Tavg both returned to the no-load program.
- The crew has implemented E-0 and ES-0.1, "Reactor Trip Recovery."
- All reactor trip signals are reset.

Which of the following actions would allow 12 SG FRV to open?

*A. Open 12 SG FRV bypass valve.

*B. Start 11 MFW pump.

*C. Re-close the reactor trip breakers.

*D. Depress the feedwater isolation reset pushbuttons for 12 SG.

*ANSWER C
*COGNITIVE Comprehension
*REFSPECIFIC Fig B18C-08
*MODULE P8174L-003
*OBJECTIVE 6
*ABASIS Incorrect, FRV bypass valve did not receive Close signal.
*BBASIS Incorrect, not an interlock to opening the FRV.
*CBASIS Correct, 12 SG FRV closed due to low Tavg after trip; after low Tavg and trip signal cleared, RTBs must be reclosed to clear FRV close signal.
*DBASIS Incorrect, reset pushbuttons not used for FRV.
*CFRBASIS N/A

*QNUM 26
*QHISTORY New
*EXAM TYPE NRC
*QDATE 5/15/00
*FACILITY 282 Prairie Island
*RTYP PWR-WEC-2
*EXLEVEL S
*AUTHOR Sonalysts, Inc.
*TIER EAPE
*KA 008AK3.03
*KAVRO 4.1
*KAVSRO 4.6
*QUESTION
Given the following conditions on Unit 2:

- The plant was stable with reactor power at 100%.
- A reactor trip and safety injection occurred due to a pressurizer safety valve failing open and remaining full open.
- All safeguards equipment has responded per design.
- The crew has implemented E-0 and transitioned to E-1, "Loss of Reactor or Secondary Coolant."
- The crew is currently performing Step 12 of E-1, "Check if SI should be terminated."

Which of the following SI Termination Criteria are expected to be satisfied even though the safety valve remains open?

*A. RCS subcooling and secondary heat sink.

*B. Pressurizer level and RCS subcooling.

*C. Pressurizer pressure and secondary heat sink.

*D. Pressurizer level and secondary heat sink.

*ANSWER D
*COGNITIVE Analysis
*REFSPECIFIC P8197L-012, pg. 40.
*MODULE P8197L-012
*OBJECTIVE 24
*ABASIS Incorrect, PRZR pressure would rapidly drop below 1650 psig (where subcooling on Thot in head would be <20°F).
*BBASIS Incorrect, PRZR pressure would rapidly drop below 1650 psig (where subcooling on Thot in head would be <20°F).
*CBASIS Incorrect, PRZR pressure would rapidly drop below 1650 psig.
*DBASIS Correct, secondary heat sink OK, and bubble in RV head would cause przr level to be >5%.
*CFRBASIS 10CFR55.43(b)(5) Assessment of facility conditions and selection of appropriate procedures.

*QNUM 27
*QHISTORY New
*EXAM TYPE NRC
*QDATE 5/15/00
*FACILITY 282 Prairie Island
*RTYP PWR-WEC-2
*EXLEVEL S
*AUTHOR Sonalysts, Inc.
*TIER EAPE
*KA 009EK2.03
*KAVRO 3.0
*KAVSRO 3.3
*QUESTION
Refer to the attached Core Exit Thermocouple map taken during the Three Mile Island accident.

Which of the following explains the difference between the temperatures in the circled region and the temperatures in the central part of the core?

*A. Safety injection flow.

*B. Natural circulation flow.

*C. Core melt in the central regions.

*D. Reflux cooling.

*ANSWER D
*COGNITIVE Analysis
*REFSPECIFIC CDA LP P8188L-003 pg 15
*MODULE P8188L-003
*OBJECTIVE 1c
*ABASIS Incorrect, no SI flow was occurring during accident.
*BBASIS Incorrect, there was insufficient RCS inventory for NC.
*CBASIS Incorrect, temperatures are not high enough for melt yet.
*DBASIS Correct, steam produced in the core is condensing in the SGs and flowing back down hot leg to core.
*CFRBASIS 10CFR.43(b)(5) Assessment of facility conditions and selection of appropriate procedures.

*QNUM 28
*QHISTORY Modified from Bank #P8197L-012 009
*EXAM TYPE NRC
*QDATE 5/15/00
*FACILITY 282 Prairie Island
*RTYP PWR-WEC-2
*EXLEVEL S
*AUTHOR Sonalysts, Inc.
*TIER EAPE
*KA W/E03EA2.01
*KAVRO 3.4
*KAVSRO 4.2
*QUESTION
Given the following conditions on Unit 1:

- The plant was stable at 100% power.
- Reactor trip and safety injection have occurred due to a LOCA inside containment.
- All safeguards components actuated per design.
- The crew has transitioned to ES-1.1, "Post-LOCA Cooldown."
- 12 SI pump has been stopped; 11 SI pump and both RHR pumps are running.
- Containment pressure is 4 psig.
- Average of core exit T/C's is 325°F.
- RCS pressure is 180 psig.
- PRZR level is 23%.

The crew is performing step 12 of ES-1.1 (Procedure step attached). Which of the following should be the final action executed in Step 12?

*A. Go to Step 17.

*B. Go to Step 13.

*C. Return to Step 9.

*D. Stop last SI pump.

*ANSWER D
*COGNITIVE Comprehension
*REFSPECIFIC ES-1.1, pg. 9, Steam Tables
*MODULE P8197L-012
*OBJECTIVE 25
*ABASIS Incorrect, all Expected Response statements are met for normal containment conditions.
*BBASIS Incorrect, one SI pump running.
*CBASIS Incorrect, PRZR level >18% with no adverse containment.
*DBASIS Correct, all Expected Response statements are met for normal containment conditions.
*CFRBASIS 10CFR55.43(b)(5) Assessment of facility conditions and selection of appropriate procedures.

*QNUM 29
*QHISTORY New
*EXAM TYPE NRC
*QDATE 5/15/00
*FACILITY 282 Prairie Island
*RTYP PWR-WEC-2
*EXLEVEL S
*AUTHOR Sonalysts, Inc.
*TIER EAPE
*KA W/E11EK3.03
*KAVRO 3.8
*KAVSRO 3.8
*QUESTION
Given the following conditions on Unit 1:

- The plant was operating steady-state at 100% power.
- A plant trip and SI have occurred due to a LOCA outside containment.
- The shift crew has performed the applicable steps of E-0, E-1, and ECA-1.2, "LOCA Outside Containment."
- The LOCA has NOT been isolated, and ECA-1.1, "Loss of Emergency Coolant Recirculation," has been implemented

Which of the following states the reason ECA-1.1 directs establishing only one train of SI flow under these conditions?

*A. To allow initiating blended makeup flow to the suction of the charging pumps.

*B. To reduce the RCS cooldown rate to less than 100°F/hr when dumping steam at maximum rate.

*C. To reduce the RWST level decrease rate and delay stopping all pumps pumping from the RWST.

*D. To allow continuing attempts to open the Sump B to RHR isolation valves for the idle RHR pump.

*ANSWER C
*COGNITIVE Memory
*REFSPECIFIC 1ECA-1.1 step 9 basis
*MODULE P8197L-012
*OBJECTIVE 5
*ABASIS Incorrect, per reference.
*BBASIS Incorrect, per reference.
*CBASIS Correct, per reference.
*DBASIS Incorrect, per reference.
*CFRBASIS 10CFR55.43(b)(5) Assessment of facility conditions and selection of appropriate procedures.

*QNUM 30
*QHISTORY NEW
*EXAM TYPE NRC
*QDATE 5/15/00
*FACILITY 282 Prairie Island
*RTYP PWR-WEC-2
*EXLEVEL B
*AUTHOR Sonalysts, Inc.
*TIER EAPE
*KA 025AA2.06
*KAVRO 3.2
*KAVSRO 3.4
*QUESTION
Given the following conditions:

- A plant cooldown to cold shutdown is being conducted per 2C1.3, "Unit 2 Shutdown".
- RHR is in a shutdown cooling lineup.
- RCS temperature is 330°F; RCS pressure is 350 psig.
- Pressurizer is filled to 100% cold cal.
- 21 RHR pump is in service and 22 RHR pump is OOS.
- 21 RHR pump locks out.

NO operator is taken.

Which of the following describes the first method of overpressure protection provided for the RHR system as RCS pressure and temperature increase?

*A. RHR suction valves automatically close and RHR discharge relief valve opens.

*B. RHR suction relief valve opens.

*C. RHR suction and RHR to Loop B return valves automatically close.

*D. RHR to Loop B return valve automatically closes and RHR suction relief valve opens.

*ANSWER B
*COGNITIVE Comprehension
*REFSPECIFIC B15 section 3.4.
*MODULE P8180L-003
*OBJECTIVE 6
*ABASIS Incorrect, auto closure and discharge relief setpoints are 600 psig.
*BBASIS Correct, suction relief setpoint is 500 psig.
*CBASIS Incorrect, RHR to Loop B valve has no automatic closure.
*DBASIS Incorrect, RHR to Loop B valve has no automatic closure.
*CFRBASIS N/A

*QNUM 31
*QHISTORY New
*EXAM TYPE NRC
*QDATE 5/15/00
*FACILITY 282 Prairie Island
*RTYP PWR-WEC-2
*EXLEVEL B
*AUTHOR Sonalysts, Inc.
*TIER EAPE
*KA 027AA1.05
*KAVRO 3.3
*KAVSRO 3.2
*QUESTION
A loss of ONLY safeguards power on Unit 1 has resulted in a loss of power to some of the pressurizer heaters. Which of the following actions can be taken to restore an additional backup heater group for RCS pressure control?

*A. Transfer Group A heaters from Bus 112 to Bus 180.

*B. Transfer Group B heaters from Bus 122 to Bus 180.

*C. Transfer Group A heaters from Bus 112 to Bus 270.

*D. Transfer Group B heaters from Bus 122 to Bus 270.

*ANSWER B
*COGNITIVE Memory
*REFSPECIFIC 1C20.6 section 5.35.
*MODULE P8186L-003
*OBJECTIVE 8
*ABASIS Incorrect, Gp A source not transferable.
*BBASIS Correct, per reference.
*CBASIS Incorrect, Gp A source not transferable.
*DBASIS Incorrect, bus 270 is Unit 2.
*CFRBASIS N/A

*QNUM 32
*QHISTORY New
*EXAM TYPE NRC
*QDATE 5/15/00
*FACILITY 282 Prairie Island
*RTYP PWR-WEC-2
*EXLEVEL S
*AUTHOR Sonalysts, Inc.
*TIER EAPE
*KA 032AG2.1.7
*KAVRO 3.7
*KAVSRO 4.4
*QUESTION
Given the following conditions during a reactor startup on Unit 2:

- N35 reads 2 x 10^{-10} amps; N36 reads 3 x 10^{-10} amps.
- P-6 is actuated, but SR trips have NOT been blocked.
- The operator has just completed verifying proper SR/IR overlap.
- SR channel N31 has just failed low.

Which of the following describes current Technical Specifications compliance and the appropriate action?

The unit is in…

*A. Violation of a Technical Specification LCO. Trip the reactor and implement E-0.

*B. Violation of a Technical Specification LCO. Fully insert control rods to maintain the reactor subcritical.

*C. A TS LCO action statement. Discontinue startup operations and return N31 to service prior to expiration of time limit.

*D. Compliance with Technical Specifications. Block the SR trips and continue the reactor startup.

*ANSWER D
*COGNITIVE Analysis
*REFSPECIFIC TS table 3.5-2a, SR trips (Startup), applicable mode 2 note c, below the P-6 setpoint.
*MODULE P8184L-002.
*OBJECTIVE 18
*ABASIS Incorrect, both SRs not required with power in the intermediate range.
*BBASIS Incorrect, this action will return power to source range where both SRs are required
*CBASIS Incorrect, not in violation of TS.
*DBASIS Correct, SRs not required above P-6 setpoint per mode note in reference.
*CFRBASIS 10 CFR 55.43(b)(5) Assessment of facility conditions and selection of appropriate procedures; generic KA G2.1.7 is coded for 10 CFR 55.43 only.

*QNUM 33
*QHISTORY New
*EXAM TYPE NRC
*QDATE 5/15/00
*FACILITY 282 Prairie Island
*RTYP PWR-WEC-2
*EXLEVEL S
*AUTHOR Sonalysts, Inc.
*TIER EAPE
*KA 037AK1.02
*KAVRO 3.5
*KAVSRO 3.9
*QUESTION
Given the following conditions on Unit 1:

- The plant was stable with reactor power at 100% and all control systems in normal lineup.
- The crew has entered 1C4 AOP-2, "Steam Generator Tube Leak," due to increased radiation levels on 1R-15, Air Ejector Exhaust.
- Samples and 1R-15 trends show the leak has stabilized at 200 gpd.
- A plant shutdown has been directed and will be performed over the next five hours.
- Chemistry is sampling the RCS, affected S/G's and air ejector discharge every 30 minutes and reporting the results to the Shift Supervisor.

What would be the expected trend of chemistry leak rate calculations during the shutdown and why? Assume the flaw size remains constant during the shutdown.

*A. Leakage would increase because air ejector flowrate would decrease.

*B. Leakage would remain the same because the isotopes analyzed are independent of power.

*C. Leakage would decrease because primary to secondary pressure difference is reduced.

*D. Leakage cannot be determined accurately when power is being changed due to iodine spiking.

*ANSWER C
*COGNITIVE Comprehension
*REFSPECIFIC P8197L-013, pg. 24; C4 AOP2; EPRI guidance on SG leakage
*MODULE P8197L-013
*OBJECTIVE 3
*ABASIS Incorrect, grab sample activity of air ejector exhaust independent of flowrate.
*BBASIS Incorrect, isotopes are gaseous and change with power.
*CBASIS Correct, D/P decreases during shutdown as SG pressures go from 700 to 1000 psig, and with constant flaw size, actual leakage will decrease.
*DBASIS Incorrect, iodines not used for calculation of leakage. Correlation of R-15 counts to leak rate will not be accurate, as stated in C4 AOP2.
*CFRBASIS 10 CFR 55.43(b)(5) Assessment of facility conditions and selection of appropriate procedures.

*QNUM 34
*QHISTORY New
*EXAM TYPE NRC
*QDATE 5/15/00
*FACILITY 282 Prairie Island
*RTYP PWR-WEC-2
*EXLEVEL S
*AUTHOR Sonalysts, Inc.
*TIER EAPE
*KA 038EA2.14
*KAVRO 3.3
*KAVSRO 3.6
*QUESTION
The limits on RCS activity provided in Technical Specifications are based on the dose that would be received at the site boundary in a SGTR accident that begins with steady-state primary-to-secondary leakage of 1 gpm. Maintaining these RCS activity limits ensures that the 2-hour dose at the site boundary during a SGTR will NOT exceed:

*A. 10CFR20 limits.

*B. A small fraction of 10CFR100 limits.

*C. EPA Protective Action Guideline thresholds.

*D. 5 Rem TEDE.

*ANSWER B
*COGNITIVE Memory
*REFSPECIFIC T.S. Basis pg B.3.1-8
*MODULE P8197L-013
*OBJECTIVE 1
*ABASIS 10CFR20 is not limiting for accidents.
*BBASIS Correct, see T.S. 3.1.D. basis.
*CBASIS Incorrect, not part of T.S.requirements.
*DBASIS TEDE is occupational limit.
*CFRBASIS 10 CFR 55.43(b)(2) Limitations in Technical Specifications

*QNUM 35
*QHISTORY New
*EXAM TYPE NRC
*QDATE 5/15/00
*FACILITY 282 Prairie Island
*RTYP PWR-WEC-2
*EXLEVEL B
*AUTHOR Sonalysts, Inc.
*TIER EAPE
*KA 054AG2.1.32
*KAVRO 3.4
*KAVSRO 3.8
*QUESTION
The following conditions are present on Unit 2:

- Load increase to 100% power in progress per 2C1.4, "Unit 2 Power Operation"
- 23 Heater Drain Tank Pump is OOS
- Current reactor power is 80%
- 22 Heater Drain Tank Pump has a high bearing temperature and must be shut down.

What effect (if any) will the stopping of 22 HDTP have on the planned load increase?

*A. No effect, continue to 100% reactor power.

*B. It will not be possible to reach 100% reactor power.

*C. 3 condensate pumps may be required at 100% reactor power.

*D. The load increase must be stopped until 2 HDT pumps are available.

*ANSWER C
*COGNITIVE Comprehension
*REFSPECIFIC 1C28.3 Precaution 3.8.
*MODULE P8174L-003
*OBJECTIVE 8
*ABASIS Incorrect, will limit MFP suction pressure.
*BBASIS Incorrect, per reference.
*CBASIS Correct, per reference 1C28.3 Limitation 4.3.
*DBASIS Incorrect, not required to stop load increase.
*CFRBASIS N/A

*QNUM 36
*QHISTORY New
*EXAM TYPE NRC
*QDATE 5/15/00
*FACILITY 282 Prairie Island
*RTYP PWR-WEC-2
*EXLEVEL S
*AUTHOR Sonalysts, Inc.
*TIER EAPE
*KA W/E05EG2.4.06
*KAVRO 3.1
*KAVSRO 4.0
*QUESTION
Given the following conditions on Unit 1:

- The plant was operating at 100% power.
- A plant trip occurred due to a loss of main feedwater
- AFW flow is lost and cannot be established.
- FR-H.1, "Response to Loss of Secondary Heat Sink," has been implemented.
- Both SG wide-range levels are at 6% and feed flow is NOT restored.

Which of the following actions is required per FR-H.1?

*A. Open the pressurizer PORVs, and then initiate safety injection.

*B. Initiate safety injection and then open the pressurizer PORVs.

*C. Dump steam from both SGs at the maximum rate.

*D. Depressurize one SG to allow condensate pumps to supply it.

*ANSWER B
*COGNITIVE Memory
*REFSPECIFIC FR-H.1, pg. 8, 9.
*MODULE P8197L-014
*OBJECTIVE 19
*ABASIS Incorrect, feed is first verified.
*BBASIS Correct, per reference.
*CBASIS Incorrect, bleed and feed is required immediately.
*DBASIS Incorrect, bleed and feed is required immediately.
*CFRBASIS 10 CFR 55.43(b)(5) Assessment of facility conditions and selection of appropriate procedures.

*QNUM 37
*QHISTORY Modified from Bank #P8186L-005 014
*EXAM TYPE NRC
*QDATE 5/15/00
*FACILITY 282 Prairie Island
*RTYP PWR-WEC-2
*EXLEVEL B
*AUTHOR Sonalysts, Inc.
*TIER EAPE
*KA 058AK1.01
*KAVRO 2.8
*KAVSRO 3.1
*QUESTION
The following conditions exist on Unit 1:

- Reactor power was stable at 100%.
- 12 battery charger has shutdown due to an internal synchronization failure.
- 12 battery voltage is 124 VDC.

Which of the following states the annunciator indications that would be seen initially as a result of this failure?

	12 DC SYSTEM TROUBLE	12 DC PANEL UNDERVOLTAGE
*A.	Actuated	Actuated
*B.	Actuated	Not Actuated
*C.	Not Actuated	Actuated
*D.	Not Actuated	Not Actuated

*ANSWER B
*COGNITIVE Comprehension
*REFSPECIFIC ARP 47024-1105, -1204; P8186L-005, pg. 6, 13.
*MODULE P8186L-005
*OBJECTIVE 7, 8
*ABASIS Incorrect, UNDERVOLTAGE is actuated at 121.5 vdc, which should not be reached for several minutes.
*BBASIS Correct, TROUBLE is actuated by 12 charger failure; UNDERVOLTAGE is actuated at 121.5 vdc, which will not be reached for several minutes.
*CBASIS Incorrect, TROUBLE is actuated by 12 charger failure; UNDERVOLTAGE is actuated at 121.5 vdc, which will not be reached for several minutes.
*DBASIS Incorrect, TROUBLE is actuated by 12 charger failure.
*CFRBASIS N/A

*QNUM 38
*QHISTORY Bank #P8182L-001C 001
*EXAM TYPE NRC
*QDATE 5/15/00
*FACILITY 282 Prairie Island
*RTYP PWR-WEC-2
*EXLEVEL B
*AUTHOR Sonalysts, Inc.
*TIER EAPE
*KA 060AK3.03
*KAVRO 3.8
*KAVSRO 4.2
*QUESTION
The following plant conditions exist:

- A release of 121 and 125 Waste Gas Decay Tanks is in progress.
- The radioactivity content of these tanks is 1000 times higher than expected due to errors in the sample analysis.
- 2R-30 has reached the alarm setpoint; the operators are verifying automatic actions per the ARP.

Which of the following actions will occur automatically to stop the gaseous radwaste release?

*A. 121 and 122 Sample Room exhaust fans stop.

*B. Laundry, Locker and Filter Room ventilation exhaust fans stop.

*C. Low Activity Gas Decay Tanks Plant Vent Valve (CV-31271) closes.

*D. 122 Aux Building Special Ventilation starts.

*ANSWER C
*COGNITIVE Memory
*REFSPECIFIC P8182L-002, pg. 15; ARP 47048 2R-30.
*MODULE P8182L-002
*OBJECTIVE #5
*ABASIS Incorrect, Sample Room exhaust fans don't stop automatically.
*BBASIS Incorrect, Laundry, Locker and Filter Room ventilation exhaust fans stop automatically, but don't affect the release.
*CBASIS Correct, per reference.
*DBASIS Incorrect, starts but does not terminate release.
*CFRBASIS N/A

*QNUM 39
*QHISTORY Modified from Bank #P8182L-002 001
*EXAM TYPE NRC
*QDATE 5/15/00
*FACILITY 282 Prairie Island
*RTYP PWR-WEC-2
*EXLEVEL S
*AUTHOR Sonalysts, Inc.
*TIER EAPE
*KA W/E16EG2.4.45
*KAVRO 3.3
*KAVSRO 3.6
*QUESTION
Given the following conditions on Unit 2:

- The plant was stable with reactor power at 100%.
- A plant trip and safety injection occurred due to a large-break LOCA in containment.
- All safeguards equipment has responded as designed.
- The crew has transitioned to E-1, "Loss of Reactor or Secondary Coolant."
- Containment high-range radiation monitor 2R-49 has just alarmed.
- The 2R-49 alarm was acknowledged and the annunciator window "High Radiation Train A" stayed solid.

Which of the following subsequent radiation monitor alarms will have the highest priority for the Emergency Director, and how will it be identified to the Control Room operators?

*A. 2R-02, Containment Vessel Area Monitor, will cause "High Radiation Train A" reflash with audible alarm.

*B. 2R-07, Incore Seal Table Area Monitor, will cause "High Radiation Train A" reflash with NO audible alarm.

*C. 2R-11, Ctmt/Shield Bldg Vent Air Particle Monitor Lo Flow, willl cause "High Radiation Train A" reflash with audible alarm.

*D. 2R-48, Containment High Range Monitor, will cause "High Radiation Train B" actuation with audible alarm.

*ANSWER D
*COGNITIVE Comprehension
*REFSPECIFIC P8182L-002, pg. 24, 25; ARP 47047, 47048.
*MODULE P8182L-002
*OBJECTIVE 6
*ABASIS Incorrect, 2R-02 not high priority under LOCA conditions.
*BBASIS Incorrect, 2R-07 not high priority under LOCA conditions.
*CBASIS Incorrect, low flow alarm is expected after containment isolation.
*DBASIS Correct, 2R-48 confirms 2R-49; both are used for emergency classification and indicate core damage.
*CFRBASIS 10 CFR 55.43(b)(5) Assess facility conditions and selection of appropriate procedures.

*QNUM 40
*QHISTORY Bank #P8178L-005 011
*EXAM TYPE NRC
*QDATE 5/15/00
*FACILITY 282 Prairie Island
*RTYP PWR-WEC-2
*EXLEVEL B
*AUTHOR Sonalysts, Inc.
*TIER EAPE
*KA 065AA1.05
*KAVRO 3.3
*KAVSRO 3.3
*QUESTION
Given the following conditions on Unit 2:

- The plant was stable at 100%.
- INSTR AIR HEADER LO PRESS annunciator has alarmed.

If an instrument air header rupture results in a continuing loss of instrument air pressure, which of the following plant conditions would require a reactor trip according to C34 AOP1, "Loss of Instrument Air"?

*A. Loss of normal letdown valve control.

*B. Loss of normal charging valve control.

*C. Loss of pressurizer spray valve control.

*D. Loss of steam generator water level control.

*ANSWER D
*COGNITIVE Memory
*REFSPECIFIC C34 AOP1, pg. 3, 13.
*MODULE P8178L-005
*OBJECTIVE 8
*ABASIS Incorrect, plant can establish alternate letdown.
*BBASIS Incorrect, charging can be minimized with letdown isolated.
*CBASIS Incorrect, valves fail closed, could cycle heaters.
*DBASIS Correct, will result in FRV's failing closed or not being able to open far enough to maintain SG levels.
*CFRBASIS N/A

*QNUM 41
*QHISTORY New
*EXAM TYPE NRC
*QDATE 5/15/00
*FACILITY 282 Prairie Island
*RTYP PWR-WEC-2
*EXLEVEL B
*AUTHOR Sonalysts, Inc.
*TIER EAPE
*KA 028AK3.02
*KAVRO 2.9
*KAVSRO 3.2
*QUESTION
Given the following conditions on Unit 1:

- Xenon oscillations are occurring and are becoming more severe.
- Reactor power is being varied between 95% and 98% under the direction of Nuclear Engineering.
- All control systems are in AUTO.
- The plant power changes are causing periodic imbalances between charging and letdown flow rates.

If the charging/letdown flow imbalance becomes severe, which of the following abnormal pressure/level conditions in the pressurizer will cause the pressurizer spray valves to be open while the pressurizer backup heaters are energized?

*A. Low level with low pressure

*B. Low level with high pressure

*C. High level with low pressure

*D. High level with high pressure

*ANSWER D
*COGNITIVE Comprehension
*REFSPECIFIC P8170L-006, pg. 15
*MODULE P8170L-006
*OBJECTIVE 9
*ABASIS Incorrect, spray valves are closed at low pressure.
*BBASIS Incorrect, BU heaters off with high pressure and low level.
*CBASIS Incorrect, spray valves are closed at low pressure.
*DBASIS Correct, BU heaters are on at 10% high level deviation; spray valves are open with high pressure.
*CFRBASIS N/A

*QNUM 42
*QHISTORY Bank #P8186L-008 019
*EXAM TYPE NRC
*QDATE 5/15/00
*FACILITY 282 Prairie Island
*RTYP PWR-WEC-2
*EXLEVEL B
*AUTHOR Sonalysts, Inc.
*TIER EAPE
*KA 056AK3.01
*KAVRO 3.5
*KAVSRO 3.9
*QUESTION
Given the following conditions on Unit 1:

- The plant was stable at 100% power.
- A loss of all offsite power and Safety Injection actuation have just occurred.

Which of the following is the LAST equipment to receive a "start permissive" from Bus 16 Load Sequencer during the load restoration?

*A. Group B Backup Heaters

*B. 122 Control Room Chiller and Pump

*C. 12 AFW Pump and 122 Air Compressor

*D. 12 CC pump and 12/14 Fan Cooler Units

*ANSWER B
*COGNITIVE Memory
*REFSPECIFIC Table B20.5-3, Safeguards Bus Load Restoration
*MODULE P8186L-008
*OBJECTIVE 5e
*ABASIS Incorrect, time step 6.
*BBASIS Correct, time step 7, last.
*CBASIS Incorrect, time step 5.
*DBASIS Incorrect, time step 4.
*CFRBASIS N/A

*QNUM 43
*QHISTORY New
*EXAM TYPE NRC
*QDATE 5/15/00
*FACILITY 282 Prairie Island
*RTYP PWR-WEC-2
*EXLEVEL B
*AUTHOR Sonalysts, Inc.
*TIER EAPE
*KA W/E13EK2.01
*KAVRO 3.0
*KAVSRO 3.1
*QUESTION
Given the following plant conditions on Unit 1:

- A spurious reactor trip from 100% power occurred.
- 12 SG feedwater regulating valve failed full open during the trip and is mechanically stuck open.
- All other equipment has operated per design.

Which of the following will be most effective in preventing overpressurization of the affected steam generator?

*A. Feedwater Isolation actuation.

*B. SG PORV opens at set pressure.

*C. SG safety valve(s) opens at set pressure.

*D. Steam dumps relieve to main condenser.

*ANSWER A
*COGNITIVE Analysis
*REFSPECIFIC B18C page 17.
*MODULE P8180L-006
*OBJECTIVE 1
*ABASIS Correct, excessive feedwater would cause the steam generator to go solid and overpressurize. FWI trips MFPs at 67% NR level.
*BBASIS Incorrect, open PORV would not relieve inflow rate of water through FWRV. Also, 11 SG would function normally to maintain Tavg at 547, so without overfill 12 SG would not become overpressurized.
*CBASIS Incorrect, open safety would not relieve inflow rate of water through FWRV.
*DBASIS Incorrect, MSIVs would close at high SG level isolating steam dumps.
*CFRBASIS N/A

*QNUM 44
*QHISTORY New
*EXAM TYPE NRC
*QDATE 5/15/00
*FACILITY 282 Prairie Island
*RTYP PWR-WEC-2
*EXLEVEL B
*AUTHOR Sonalysts, Inc.
*TIER System
*KA 001K5.69
*KAVRO 2.9
*KAVSRO 3.6
*QUESTION
The following conditions are noted during a reactor startup:

- N31 reads 5 x 10^{4} cps.
- N32 reads 5 x 10^{4} cps.
- N35 reads 2 x 10^{-11}amps.
- N36 reads 3 x 10^{-11}amps.
- P-6 is NOT actuated.

Which of the following has caused these conditions to exist?

*A. One intermediate range channel is over-compensated.

*B. One intermediate range channel is under-compensated

*C. Both intermediate range channels are over-compensated.

*D. Both intermediate range channels are under-compensated.

*ANSWER C
*COGNITIVE Comprehension
*REFSPECIFIC P8184L-002, pages 21 and 44 and Figure B9A-1
*MODULE P8184L-002
*OBJECTIVE 16
*ABASIS Incorrect, P-6 is actuated by 1 of 2 IR channels > 10^{-10}, so one over-compensated IR channel would NOT prevent the other channel from actuating P-6.
*BBASIS Incorrect, an under-compensated IR channel would cause a reading higher than actual, resulting in early actuation of P-6.
*CBASIS Correct, over-compensation results in lower output from detector and, since P-6 is actuated by 1 of 2 IR channels > 10^{-10}, both channels must be over-compensated.
*DBASIS Incorrect, under-compensated IR channels would cause a reading higher than actual, resulting in early actuation of P-6.
*CFRBASIS N/A

*QNUM 45
*QHISTORY New
*EXAM TYPE NRC
*QDATE 5/15/00
*FACILITY 282 Prairie Island
*RTYP PWR-WEC-2
*EXLEVEL B
*AUTHOR Sonalysts, Inc.
*TIER System
*KA 003K6.04
*KAVRO 2.8
*KAVSRO 3.1
*QUESTION
Unit 1 was at 100% power when an inadvertant Safety Injection occured.

Which of the following describes the effect on RCP #1 seal leakoff flow?

RCP seal leakoff flow is...

*A. Directed to the VCT.

*B. Directed to the PRT.

*C. Directed to the RCDT.

*D. Isolated.

*ANSWER B
*COGNITIVE Comprehension
*REFSPECIFIC P8172L-001a, page 15 and B12A-2
*MODULE P8172L-001a
*OBJECTIVE 6
*ABASIS Incorrect, per reference.
*BBASIS Correct, a CI signal shuts MV32199 and MV-32166 which isolates seal return and excess letdown from the VCT. The relief valve on the seal return line actuates and directs leakoff flow to the PRT.
*CBASIS Incorrect, per reference.
*DBASIS Incorrect, leakoff flow still occurs even though the normal path is isolated.
*CFRBASIS N/A

*QNUM 46
*QHISTORY Modified from Bank #P8172L-001A 057
*EXAM TYPE NRC
*QDATE 5/15/00
*FACILITY 282 Prairie Island
*RTYP PWR-WEC-2
*EXLEVEL B
*AUTHOR Sonalysts, Inc.
*TIER System
*KA 004K5.36
*KAVRO 2.5
*KAVSRO 2.8
*QUESTION
During boration of the RCS, what is the reason for restricting the ratio of boric acid flow to total charging flow?

*A. Prevent runout of the BA transfer pump.

*B. Prevent flow erosion in the BA blender.

*C. Prevent excessive wear on charging pump seals.

*D. Prevent plugging of seal injection needle valves.

*ANSWER D
*COGNITIVE Memory
*REFSPECIFIC C12.5 AOP1 section 2.4 caution
*MODULE P8172L-001a
*OBJECTIVE 8
*ABASIS Incorrect, not a concern.
*BBASIS Incorrect, ratio does not affect flow significantly.
*CBASIS Incorrect, per reference.
*DBASIS Correct, per reference.
*CFRBASIS N/A

*QNUM 47
*QHISTORY Bank # P8180L-006 013
*EXAM TYPE NRC
*QDATE 5/15/00
*FACILITY 282 Prairie Island
*RTYP PWR-WEC-2
*EXLEVEL B
*AUTHOR Sonalysts, Inc.
*TIER System
*KA 013K6.01
*KAVRO 2.7
*KAVSRO 3.1
*QUESTION

The yellow containment pressure channel 1PI-950 failed high. The trip switch for bistable PC950B, Hi-Hi Containment Spray, was placed in the trip position. Which of the following describes the result of placing this switch to the trip position?

*A. De-energizes the DC power satisfying the yellow channel logic matrix for both trains of the 'P' signal.

*B. De-energizes the 1PI-950 input relays preventing the yellow channel from generating a spurious 'P' signal.

*C. Energizes the 1PI-950 input relays generating an input to the 'P' actuation signal from the yellow channel.

*D. Energizes the master bypass relay preventing the yellow channel from generating a spurious 'P' signal.

*ANSWER C
*COGNITIVE Comprehension
*REFSPECIFIC P8180L-006, page 15
*MODULE P8180L-006
*OBJECTIVE 3d
*ABASIS Incorrect, per reference.
*BBASIS Incorrect, per reference.
*CBASIS Correct, placing the B/S trip switch to trip has the same result as exceeding the setpoint. For 'P' signals, input relays are energized rather than de-energized as they are for other SFGD signals.
*DBASIS Incorrect, per reference.
*CFRBASIS N/A

*QNUM 48
*QHISTORY New
*EXAM TYPE NRC
*QDATE 5/15/00
*FACILITY 282 Prairie Island
*RTYP PWR-WEC-2
*EXLEVEL B
*AUTHOR Sonalysts, Inc.
*TIER System
*KA 014K1.01
*KAVRO 3.2
*KAVSRO 3.6
*QUESTION
Which of the following provides a rod position group demand signal directly to the Rod Insertion Limit Monitor?

*A. Bank overlap unit

*B. Pulse-to-analog converter

*C. Group step counter

*D. Plant computer (ERCS)

*ANSWER B
*COGNITIVE Memory
*REFSPECIFIC B6 page 7 section 3.4.1
*MODULE P8184L-005
*OBJECTIVE 7
*ABASIS The BOU keeps a total count of up and down cycles and provides this data to the data logger which is the basis for demand position, but the BOU does not provide a group position signal directly to the RIL circuits.
*BBASIS The P-to-A converter converts group demand position to an analog voltage and provides the signal directly to the RIL circuits.
*CBASIS The group step counters in the control room provide indication only.
*DBASIS ERCS compares bank demand to individual rod position for each rod to develop deviation alarms, but the computer does not provide an input to the RIL circuits.
*CFRBASIS N/A

*QNUM 49
*QHISTORY Modified Bank # P8184-002 015
*EXAM TYPE NRC
*QDATE 5/15/00
*FACILITY 282 Prairie Island
*RTYP PWR-WEC-2
*EXLEVEL B
*AUTHOR Sonalysts, Inc.
*TIER System
*KA 015A4.02
*KAVRO 3.9
*KAVSRO 3.9
*QUESTION
The RO notes the following NIS parameters on the control board following an N42 rate trip channel alert:

	N41	N42	N43	N44
Percent Power	100	48	100	99
Delta I	0	+30	+1	+1

Based on the above information, which of the following N42 failures occurred?

*A. Summing amplifier

*B. Isolation amplifier

*C. Upper detector

*D. Lower detector

*ANSWER D
*COGNITIVE Analysis
*REFSPECIFIC Figure B9A-10
*MODULE P8184L-002
*OBJECTIVE 17
*ABASIS Incorrect, failure of the summing amplifier would affect power indication but not delta I.
*BBASIS Incorrect, failure of an isolation amplifier would affect either power or delta I, but not both (separate amps).
*CBASIS Incorrect, failure of the upper detector would result in negative delta I.
*DBASIS Correct, power would be about ½ normal, and delta-I very positive.
*CFRBASIS N/A

*QNUM 50
*QHISTORY New
*EXAM TYPE NRC
*QDATE 5/15/00
*FACILITY 282 Prairie Island
*RTYP PWR-WEC-2
*EXLEVEL B
*AUTHOR Sonalysts, Inc.
*TIER System
*KA 017K3.01
*KAVRO 3.5
*KAVSRO 3.7
*QUESTION
The following conditions exist on Unit 2:

- ICCM Train A is OOS.

The following events then occur:

- Loss of offsite power with reactor trip
- Loss of power to 2EMB.
- Natural Circulation conditions are being verified in 2ES-0.1, Reactor Trip Recovery.

How will the operators determine Subcooling and Core Exit Thermocouple Temperatures under these conditions?

*A. ERCS, displays for Subcooling and CETC's on Train A are unaffected by these plant conditions.

*B. Subcooling from the Train A subcooling monitor, CETC temperatures by local readings on the junction boxes.

*C. Subcooling by comparing highest hot leg temperature to RCS wide range pressure, CETC temperatures by Upper Head Thermocouple readings.

*D. Subcooling by comparing ERCS thermocouple readings to RCS wide range pressure, CETC temperatures by local readings on the junction boxes.

*ANSWER A
*COGNITIVE Comprehension
*REFSPECIFIC Fig. B10-15, Load List for 2EMB
*MODULE P8170L-001a
*OBJECTIVE 9
*ABASIS ERCS readings are independent of ICCM and the RMU receives direct inputs from the thermocouples; the RMU for Train B loses power but this is not required knowledge.
*BBASIS Incorrect, subcooling monitor has lost power.
*CBASIS Incorrect, hot leg temperature not used, Upper Head thermocouples not accurate for natural circulation.
*DBASIS Incorrect, TC temperatures are still available on ERCS.
*CFRBASIS N/A

*QNUM 51
*QHISTORY New
*EXAM TYPE NRC
*QDATE 5/15/00
*FACILITY 282 Prairie Island
*RTYP PWR-WEC-2
*EXLEVEL B
*AUTHOR Sonalysts, Inc.
*TIER System
*KA 022A2.04
*KAVRO 2.9
*KAVSRO 3.2
*QUESTION
Given the following conditions on Unit 1:

- The plant is operating at 100% power.
- 12 CFCU has developed a 30 gpm leak to atmosphere on the inlet pipe to one heat exchanger.
- The leakage was locally verified, so flow to and from the CFCU has been isolated from the control room.

Which of the following states the most important operational concern (prior to completing C35 AOP4, Cooling Water Leakage in Containment) associated with this failure?

*A. A single failure could cause loss of containment integrity during an accident.

*B. The leakage could have caused damage to components in containment.

*C. 12 and 14 CFCUs will be inoperable for containment cooling during an accident.

*D. 12 CFCU is inoperable for containment cooling during an accident.

*ANSWER A
*COGNITIVE Comprehension
*REFSPECIFIC C35 AOP4, page 3
*MODULE P8176L-003
*OBJECTIVE 12
*ABASIS Correct, see C35 AOP4 purpose; violation of cntmt integrity is 1-hour LCO.
*BBASIS Incorrect, location of CFCUs should prevent serious damage.
*CBASIS Incorrect, 14 CFCU is still operable.
*DBASIS Incorrect, 12 CFCU is OOS but this a 72-hour LCO.
*CFRBASIS N/A

*QNUM 52
*QHISTORY New
*EXAM TYPE NRC
*QDATE 5/15/00
*FACILITY 282 Prairie Island
*RTYP PWR-WEC-2
*EXLEVEL B
*AUTHOR Sonalysts, Inc.
*TIER System
*KA 026K1.02
*KAVRO 4.1
*KAVSRO 4.1
*QUESTION
Given the following conditions on Unit 1:

- Large break LOCA.
- 'P' signal generated.
- Both trains of containment spray actuated.
- Received and confirmed alarm "11 CONTAINMENT SPRAY PUMP CC WATER LO FLOW."

Which of the following describes the effect, if any, of continued operation of the 11 containment spray pump without component cooling water flow?

*A. Overheating and subsequent cavitation.

*B. Bearing failure and subsequent breaker trip.

*C. Pump degradation and subsequent low discharge flow.

*D. No effect on pump operation.

*ANSWER D
*COGNITIVE Memory
*REFSPECIFIC C14 AOP1 table 1
*MODULE P8172L-002
*OBJECTIVE 6a
*ABASIS Incorrect, seal failure would NOT cause an appreciable increase in the temperature of the pumped fluid in the pump casing.
*BBASIS Incorrect, the bearing is oil lubricated and would be unaffected by reduced cooling flow.
*CBASIS Incorrect, pump capacity would be unaffected by seal leakage as long as NPSH is maintained.
*DBASIS Correct, per reference.
*CFRBASIS N/A

*QNUM 53
*QHISTORY Modified from bank # P8174L-003 005
*EXAM TYPE NRC
*QDATE 5/15/00
*FACILITY 282 Prairie Island
*RTYP PWR-WEC-2
*EXLEVEL B
*AUTHOR Sonalysts, Inc.
*TIER System
*KA 056K4.14
*KAVRO 2.2
*KAVSRO 2.6
*QUESTION
Which of the following explains why a condensate bypass line is installed from upstream of the LP heaters directly to the suction of the main feedwater pumps?

*A. To prevent feedwater pump cavitation when a low feedwater suction pressure occurs.

*B. To maintain feedwater pump suction during a loss of LP heater level when operating at 100% power.

*C. To ensure minimum flow for condensate pump heat removal during plant startup and shutdown.

*D. To provide increased condensate flow to compensate for high LP heater pressure drop at high power levels.

*ANSWER A
*COGNITIVE Memory
*REFSPECIFIC B28A page 9
*MODULE P8174L-003
*OBJECTIVE 2
*ABASIS Correct, low temperature of bypass flow prevents flashing of the hot condensate at MFP suction.
*BBASIS Incorrect, loss of LP heater level will decrease suction temp, increasing NPSH.
*CBASIS Incorrect, not the recirculation flowpath.
*DBASIS Incorrect, not a concern.
*CFRBASIS N/A

*QNUM 54
*QHISTORY New
*EXAM TYPE NRC
*QDATE 5/15/00
*FACILITY 282 Prairie Island
*RTYP PWR-WEC-2
*EXLEVEL B
*AUTHOR Sonalysts, Inc.
*TIER System
*KA 059A1.03
*KAVRO 2.7
*KAVSRO 2.9
*QUESTION
Given the following conditions on Unit 1:

- Main feedwater system in service with 12 MFP running.
- 11 Condensate pump running.
- S/G level control on bypass FW flow control valves in AUTO per 1C28.2, Unit 1 Feedwater System.
- Main turbine on the turning gear.
- AFW aligned for safeguard operation per 1C28.1, Auxiliary Feedwater System Unit 1.
- Reactor power = 6%.

A bearing temperature problem on 12 MFP requires that the MFPs be swapped. Which of the following describes the actions that would be performed to swap to 11 MFP?

*A. Stop 12 MFP and then start 11 MFP.

*B. Start a second condensate pump, start 11 MFP, and then stop 12 MFP.

*C. Reduce power to <2%, shift to AFW, stop 12 MFP, and then start 11 MFP.

*D. Increase steam dump flow to 12% power, start a second condensate pump, start 11 MFP, and then stop 12 MFP.

*ANSWER C
*COGNITIVE Comprehension
*REFSPECIFIC 1C28.2, page 32
*MODULE P8174L-003
*OBJECTIVE 8
*ABASIS Incorrect, would result in AFWP autostart.
*BBASIS Incorrect, not done at low power per Note.
*CBASIS Correct, per reference.
*DBASIS Incorrect, power should not be increased to make the swap.
*CFRBASIS N/A

*QNUM 55
*QHISTORY New
*EXAM TYPE NRC
*QDATE 5/15/00
*FACILITY 282 Prairie Island
*RTYP PWR-WEC-2
*EXLEVEL B
*AUTHOR Sonalysts, Inc.
*TIER System
*KA 061A3.04
*KAVRO 4.1
*KAVSRO 4.2
*QUESTION
Which of the following automatically occurs as a result of an AFW pump autostart on 21 S/G Lo-Lo level?

*A. Makeup is aligned to the condenser hotwell.

*B. AFW Pump recirculation flow is aligned to the condensate storage tank.

*C. Hydrazine injection pumps trip.

*D. Steam generator blowdown flow realigns to 21 SGB heat exchanger.

*ANSWER B
*COGNITIVE Memory
*REFSPECIFIC B28B section 4.2
*MODULE P8180L-007
*OBJECTIVE 4
*ABASIS Incorrect, normal and emergency makeup to the hotwell is automatically isolated on AFW actuation.
*BBASIS Correct, AFW recirculation to the CST is initiated per reference.
*CBASIS Incorrect, hydrazine is isolated to the condensate header and directed to the AFW pump suction.
*DBASIS Incorrect, SGBD isolates on AFW actuation.
*CFRBASIS N/A

*QNUM 56
*QHISTORY Bank #8186-005 002
*EXAM TYPE NRC
*QDATE 5/15/00
*FACILITY 282 Prairie Island
*RTYP PWR-WEC-2
*EXLEVEL B
*AUTHOR Sonalysts, Inc.
*TIER System
*KA 063K1.02
*KAVRO 2.7
*KAVSRO 3.2
*QUESTION
Given the following conditions on Unit 1:

- The DC electrical system is aligned for normal at-power operations.
- The MCC supplying 11 battery charger is deenergized and can NOT be restored.

Which of the following states the effect of this event on DC panel 11 power supply?

11 battery will supply DC panel 11...

*A. After 11 battery charger output voltage drops to less than battery voltage.

*B. When the 11 battery charger DC output breaker automatically opens.

*C. Until 11 battery charger static switch automatically selects an alternate AC source.

*D. Until the portable charger is aligned as a replacement.

*ANSWER A
*COGNITIVE Comprehensive
*REFSPECIFIC Figure B20.9-01
*MODULE P8186L-005
*OBJECTIVE 7
*ABASIS Correct, the 11 battery charger normally supplies both the battery and DC panel 11. When the output of the battery charger decreases to less than the battery terminal voltage, the battery will automatically begin supplying connected loads.
*BBASIS Incorrect, this breaker is normally closed and would remain closed.
*CBASIS Incorrect, charger does not have static switch.
*DBASIS Incorrect, portable charger dependent on same MCC.
*CFRBASIS N/A

*QNUM 57
*QHISTORY New
*EXAM TYPE NRC
*QDATE 5/15/00
*FACILITY 282 Prairie Island
*RTYP PWR-WEC-2
*EXLEVEL B
*AUTHOR Sonalysts, Inc.
*TIER System
*KA 068K5.03
*KAVRO 2.6
*KAVSRO 2.6
*QUESTION
Technical Specification 6.5.D.6 limits the dose to general public from liquid effluent discharges is limited to 0.12 mrem TEDE or .4 mrem TODE in a calendar quarter. In order to meet this limit, what restriction must be placed on the liquid effluent discharge?

*A. A total radioactive liquid discharge of 10 curies to the river during the calendar quarter.

*B. Total activity of water in the discharge canal is limited to 2×10^{-4} uci/ml.

*C. R-18 trip setpoint is calculated according to the mix of radionuclides in the discharge.

*D. R-18 trip setpoint must be set at 10 mrem/hr.

*ANSWER C
*COGNITIVE Comprehension
*REFSPECIFIC ODCM H4, Section 4.1, 2.7
*MODULE P8182L-001a
*OBJECTIVE 4
*ABASIS Incorrect, curie limit refers to content of liquid storage tanks.
*BBASIS Incorrect, discharge canal activity is not monitored by process monitors that can stop the discharge.
*CBASIS Correct, alarm setpoint is calculated per section 4.
*DBASIS Incorrect answer, per reference.
*CFRBASIS 10CFR55.43(b)(1) Limitations of facility license

*QNUM 58
*QHISTORY Modified from bank # P8182L-002 016
*EXAM TYPE NRC
*QDATE 5/15/00
*FACILITY 282 Prairie Island
*RTYP PWR-WEC-2
*EXLEVEL B
*AUTHOR Sonalysts, Inc.
*TIER System
*KA 068A4.03
*KAVRO 3.6
*KAVSRO 3.8
*QUESTION
Given the following conditions:

- A release of 121 ADT Monitor Tank is in progress.
- Annunciator 47022-0108, HI RADIATION TRAIN B PANEL ALARM, has actuated.
- R-18, Waste Disposal Liquid Effluent Monitor, is alarming.

Which of the following states the required initial action, if any, after verifying the R-18 reading is above the alarm setpoint?

*A. NO action required, this is an expected alarm.

*B. Direct the Duty Chemist to sample the effluent waste stream.

*C. Verify the Waste Liquid Common Discharge Header valve automatically closed.

*D. Verify the Waste Liquid Common Discharge Header keylock release valve automatically closed.

*ANSWER C
*COGNITIVE Memory
*REFSPECIFIC C47048, page 1
*MODULE P8182L-001a
*OBJECTIVE 6
*ABASIS Incorrect, R-18 setpoint is based on tank activity.
*BBASIS Incorrect, done if release is made with R-18 OOS.
*CBASIS Correct, required actions are to verify alarm, check the Common Discharge Header valve closed automatically, and then to manually close the keylock release valve.
*DBASIS Incorrect, the common discharge header keylock release valve must be closed manually.
*CFRBASIS N/A

*QNUM 59
*QHISTORY New
*EXAM TYPE NRC
*QDATE 5/15/00
*FACILITY 282 Prairie Island
*RTYP PWR-WEC-2
*EXLEVEL B
*AUTHOR Sonalysts, Inc.
*TIER System
*KA 071K6.10
*KAVRO 2.3
*KAVSRO 2.5
*QUESTION
Given the following conditions:

- 121 Waste Gas Compressor (WGC) is running.
- 127 Gas Decay Tank (GDT) is selected.
- 121 CVCS HUT is being pumped down using #11 gas stripper feed pump.
- The pressure regulator from 127 GDT to the header has failed closed.
- Common vent header pressure is 1.8 psig and decreasing.

Which of the following will occur as common vent header pressure continually decreases?

*A. Gas stripper feed pumps trip at 0 psig.

*B. 121 WGC trips on low vent header pressure.

*C. 128 GDT is vented to the vent header.

*D. CVCS HUT could collapse as vacuum is drawn.

*ANSWER A
*COGNITIVE Memory
*REFSPECIFIC B21A Section 4.1; B12B section 3.7.C
*MODULE P8182L-001C
*OBJECTIVE 3
*ABASIS Correct, this would stop pressure drop.
*BBASIS Incorrect, the running WGC goes into recycle on low header pressure.
*CBASIS Incorrect, only the selected GDT is available.
*DBASIS Incorrect, the N2 addition and gas stripper pump trip prevents the header from reaching a vacuum.
*CFRBASIS N/A

*QNUM 60
*QHISTORY New
*EXAM TYPE NRC
*QDATE 5/15/00
*FACILITY 282 Prairie Island
*RTYP PWR-WEC-2
*EXLEVEL B
*AUTHOR J. Kempkes
*TIER System
*KA 003 A3.05
*KAVRO 2.7
*KAVSRO 2.6
*QUESTION

The Lead Operator is preparing to do a post-accident start of 12 RCP per 1C3 AOP1, "Post Accident Emergency Start of a Reactor Coolant Pump." Just prior to starting the RCP, the operator notes the following light indications:

Control Switch	Equipment	Green	Yellow	Red
CS-46258	12 RCP Oil Lift Pump	Off	Off	ON
CS-46256	12 RCP	ON	ON	Off

All bulbs have been checked OK.

When the Lead Operator takes CS-46256 to START, what will occur and why?

12 RCP will...

*A. NOT start because sufficient oil lift pressure does NOT exist.

*B. NOT start because sufficient #1 seal D/P does NOT exist.

*C. NOT Start because the Large Motor Monitor interlock is not met.

*D. Start because all required conditions have been met.

*ANSWER A
*COGNITIVE Comprehension
*REFSPECIFIC Logic NF-40781-1
*MODULE P8170L-002
*OBJECTIVE 11
*ABASIS Correct, the RCP start permissive is the Oil Lift Pump breaker closed with >350 psig oil lift pressure. The lift pressure >350 psig illuminates the yellow light on CS-46258.
*BBASIS Incorrect, the #1 seal D/P is not related to the amber light.
*CBASIS Incorrect, the LMM is met (yellow on CS-46256) but is not an interlock to start the RCP.
*DBASIS Incorrect, interlock not made up.
*CFRBASIS N/A

*QNUM 61
*QHISTORY New
*EXAM TYPE NRC
*QDATE 5/15/00
*FACILITY 282 Prairie Island
*RTYP PWR-WEC-2
*EXLEVEL B
*AUTHOR Sonalysts, Inc.
*TIER System
*KA 072K2.01
*KAVRO 2.3
*KAVSRO 2.5
*QUESTION
Given the following conditions on Unit 1:

- Power has been lost to MCC 1AC 1.

Which of the following describes the source of instrument bus power to 1RM-49, CNTMT HI RNG AREA MNTR?

*A. DC panel 11 to inverter 11 to panel 111

*B. Interruptible Bus Panel 117 to panel 112

*C. Interruptible Bus Panel 117 to panel 113

*D. DC panel 12 to inverter 14 to panel 114

*ANSWER A
*COGNITIVE Comprehension
*REFSPECIFIC Table B20.8-1, Inverter Power Supplies; Figure B20.8-01; and B20.8, page 2
*MODULE P8186L-015
*OBJECTIVE 4
*ABASIS Correct, per reference.
*BBASIS Incorrect, panel 117 not normally aligned.
*CBASIS Incorrect, panel 117 not normally aligned.
*DBASIS Incorrect, wrong train.
*CFRBASIS N/A

*QNUM 62
*QHISTORY New
*EXAM TYPE NRC
*QDATE 5/15/00
*FACILITY 282 Prairie Island
*RTYP PWR-WEC-2
*EXLEVEL B
*AUTHOR Sonalysts, Inc.
*TIER System
*KA 072A4.03
*KAVRO 3.1
*KAVSRO 3.1
*QUESTION

The operation selector switch for the containment area monitor, 1R-2, has been placed in the 'Check Source' position during a quarterly surveillance.

A "Rad Monitor Check Source Panel Alarm", 47022:0209, is received and a blue 'test' light comes on at the 1R-2 drawer.

What other actions or alarms are expected when the operation selector switch is taken to 'Check Source'?

*A. An electronic check source signal is applied at the detector.

*B. An electronic check source signal is applied at the radiation monitor panel and a Hi Rad Train B alarm is received.

*C. A drive motor moves a check source in front of the detector.

*D. A drive motor moves a check source in front of the detector and a Hi Rad Train B alarm is received.

*ANSWER C
*COGNITIVE Memory
*REFSPECIFIC B11, page 23; Logic NF-40750-6
*MODULE P8182L-002
*OBJECTIVE 4
*ABASIS Incorrect, check source is used.
*BBASIS Incorrect, check source is used.
*CBASIS Correct, per reference and logic. The check source position disables the Hi Rad outputs.
*DBASIS Incorrect, Hi Rad Train B does not alarm.
*CFRBASIS N/A

*QNUM 63
*QHISTORY New
*EXAM TYPE NRC
*QDATE 5/15/00
*FACILITY 282 Prairie Island
*RTYP PWR-WEC-2
*EXLEVEL B
*AUTHOR Sonalysts, Inc.
*TIER System
*KA 002A1.08
*KAVRO 3.7
*KAVSRO 3.8
*QUESTION
Which of the following is the program Tavg for Unit 1 at 77% power?

*A. 555°F

*B. 556°F

*C. 557°F

*D. 559°F

*ANSWER C
*COGNITIVE Comprehension
*REFSPECIFIC Figure B7-4
*MODULE P9140L-703
*OBJECTIVE 2
*ABASIS Incorrect, per reference.
*BBASIS Incorrect, per reference.
*CBASIS Correct, see below.
*DBASIS Incorrect, per reference.
*CFRBASIS N/A

Tref = 547 + 13(P% x .01)

Tref = 547 + 13(77 x .01)

Tref = 547 + 10 = 557

*QNUM 64
*QHISTORY New
*EXAM TYPE NRC
*QDATE 5/15/00
*FACILITY 282 Prairie Island
*RTYP PWR-WEC-2
*EXLEVEL B
*AUTHOR Sonalysts, Inc.
*TIER System
*KA 010K5.02
*KAVRO 2.8
*KAVSRO 2.9
*QUESTION
Given the following conditions on Unit 1:

- Unit 1 is at 100% power.
- A pressurizer safety valve flow alarm has been received.
- PRT pressure is 20 psig.
- Containment pressure is 0 psig

Which of the following is the approximate tailpiece temperature expected?

*A. 218°F

*B. 230°F

*C. 260°F

*D. 650°F

*ANSWER C
*COGNITIVE Comprehension
*REFSPECIFIC Mollier Diagram
*MODULE P8197L-012
*OBJECTIVE 24
*ABASIS Incorrect, assumes PRT is atmospheric pressure.
*BBASIS Incorrect, assumes PRT is at 5 psig (normal) pressure.
*CBASIS Correct, Expansion from 2250 psig and 650°F in the pressurizer to approximately 20 psig downstream of the safety valve will result in a tailpiece temperature of approximately 260°F due to isentalpic expansion along the saturation line of the Mollier Diagram.
*DBASIS Incorrect, based on PRZR conditions.
*CFRBASIS N/A

*QNUM 65
*QHISTORY New
*EXAM TYPE NRC
*QDATE 5/15/00
*FACILITY 282 Prairie Island
*RTYP PWR-WEC-2
*EXLEVEL B
*AUTHOR Sonalysts, Inc.
*TIER System
*KA 011K2.01
*KAVRO 3.1
*KAVSRO 3.2
*QUESTION
Given the following conditions on Unit 1:

- Charging pump 12 is operating in Auto
- Charging pump 11 is operating in Manual at minimum speed
- Charging pump 13 is not running with the control switch in neutral.
- Bus #15 voltage has just been lost, Bus #16 remains energized.

Which of the following would result from this event?

*A. Charging pump 12 continues operating; 11 and 13 are not available.

*B. Charging pumps 11 and 12 continue operating; only 13 is not available.

*C. Charging pump 11 continues operating, 12 is lost, and 13 is not available.

*D. Charging pump 12 is lost, 11 continues operating, and 13 is still available.

*ANSWER D
*COGNITIVE Memory
*REFSPECIFIC P8172L-001a, page 19
*MODULE P8172L-001a
*OBJECTIVE 8
*ABASIS Incorrect, 12 chg pump loses power, 13 still available.
*BBASIS Incorrect, 12 chg pump loses power, 13 still available.
*CBASIS Incorrect, 13 is still available.
*DBASIS Correct, per reference.
*CFRBASIS N/A

*QNUM 66
*QHISTORY New
*EXAM TYPE NRC
*QDATE 5/15/00
*FACILITY 282 Prairie Island
*RTYP PWR-WEC-2
*EXLEVEL B
*AUTHOR Sonalysts, Inc.
*TIER System
*KA 012 K3.02
*KAVRO 3.2
*KAVSRO 3.3
*QUESTION
Which of the following can cause a turbine runback?

*A. Pressurizer level at 5% below Przr Hi Lvl trip setpoint

*B. Delta-T at 5% below OP dT trip setpoint

*C. Intermediate Range current at 5% below IR Hi Flux (current equiv) trip setpoint

*D. Power Range flux at 5% below PR Hi Flux trip setpoint

*ANSWER B
*COGNITIVE Memory
*REFSPECIFIC B8, page 13
*MODULE P8176L-001
*OBJECTIVE 4
*ABASIS Incorrect, causes a trip, NOT a runback.
*BBASIS Correct, per reference.
*CBASIS Incorrect, rod stop blocked at power >10%.
*DBASIS Incorrect, Power Range High Flux causes a reactor trip.
*CFRBASIS N/A

*QNUM 67
*QHISTORY New
*EXAM TYPE NRC
*QDATE 5/15/00
*FACILITY 282 Prairie Island
*RTYP PWR-WEC-2
*EXLEVEL B
*AUTHOR Sonalysts, Inc.
*TIER System
*KA 016K6.01
*KAVRO 2.3
*KAVSRO 2.5
*QUESTION
With the plant at normal operating conditions for 100% power, which of the following describes the effect of a bellows rupture occurring in PRZR level detector LT-426?

*A. Indication on LI-426 fails low.

*B. Indication on LI-426 fails high.

*C. Indication on LI-426 fails as-is.

*D. Level detector LT-426 will overheat.

*ANSWER B
*COGNITIVE Comprehension
*REFSPECIFIC B4A section 3.5.3, detector is density-compensated, sealed reference leg D/P level transmitter
*MODULE P8158L-001
*OBJECTIVE 16
*ABASIS Incorrect, dP goes to 0 indicating high level.
*BBASIS Correct, dP goes to 0 indicating high level.
*CBASIS Incorrect, dP goes to 0 indicating high level.
*DBASIS Incorrect, ref leg is sealed; little flow thru detector occurs.
*CFRBASIS N/A

*QNUM 68
*QHISTORY New
*EXAM TYPE NRC
*QDATE 5/15/00
*FACILITY 282 Prairie Island
*RTYP PWR-WEC-2
*EXLEVEL B
*AUTHOR Sonalysts, Inc.
*TIER System
*KA 034A2.02
*KAVRO 3.0
*KAVSRO 3.3
*QUESTION
You are the SRO in change for the movement of an empty TN-40 spent fuel cask. It is being lowered into 121 SFP in preparation for loading when the following events occur:

- The crane fails and the cask drops to the bottom of the pool.
- You can see a large crack in the bottom of the pool.
- Annunciators 47016:0101, 121 SPENT FUEL PIT LO LVL, and 47016:0401, 122 SPENT FUEL PIT LO LVL, have been received on Unit 1.
- Pool level is has decreased 1 inch in the last 4 minutes with both SFP's and the transfer canal connected.

Which of the following states the initial action that should be taken?

*A. Install SFP weir gates to isolate 122 from 121 pools.

*B. Evacuate all personnel from the spent fuel pool area.

*C. Makeup to the SFP using water from the CVCS Holdup Tank.

*D. Makeup to the SFP using water from the CVCS Holdup Tank and the Unit 1 CVCS BA blender.

*ANSWER B
*COGNITIVE Memory
*REFSPECIFIC C16 AOP1 step 2.4.2
*MODULE P8182L-004
*OBJECTIVE 7
*ABASIS Incorrect, recovery action if have 5' of water above fuel assemblies.
*BBASIS Correct, per reference, first action after locally verifying low level.
*CBASIS Incorrect, later manual action. Current SFP leak rate is (1210 gal/in) (1 in/4 min) = 302.5 gpm, good distractor.
*DBASIS Incorrect, per step 2.4.6 only use one source from choices.
*CFRBASIS N/A

*QNUM 69
*QHISTORY New
*EXAM TYPE NRC
*QDATE 5/15/00
*FACILITY 282 Prairie Island
*RTYP PWR-WEC-2
*EXLEVEL B
*AUTHOR Sonalysts, Inc.
*TIER System
*KA 028K1.01
*KAVRO 2.5
*KAVSRO 2.5
*QUESTION
Gases or air vented through the post-LOCA vent system will be processed by which of the following systems?

*A. Containment In-Service Purge

*B. Auxiliary Building Special Ventilation

*C. Shield Building Special Ventilation

*D. Containment Vessel Air Handling

*ANSWER C
*COGNITIVE Memory
*REFSPECIFIC C19.4 section 1.0
*MODULE P8180L-008
*OBJECTIVE 9
*ABASIS Incorrect, per reference.
*BBASIS Incorrect, per reference.
*CBASIS Correct, per reference.
*DBASIS Incorrect, per reference.
*CFRBASIS N/A

*QNUM 70
*QHISTORY New
*EXAM TYPE NRC
*QDATE 5/15/00
*FACILITY 282 Prairie Island
*RTYP PWR-WEC-2
*EXLEVEL S
*AUTHOR Sonalysts, Inc.
*TIER System
*KA 033G2.4.04
*KAVRO 4.0
*KAVSRO 4.3
*QUESTION
Given the following conditions on Unit 1:

- Refueling operations ongoing in containment and the Spent Fuel Pool.
- Transfer tube gate valve is open.
- Annunciator 47016:0504, CONTAINMENT SUMP C HI LVL, is received.
- One minute later, annunciator 47016:0304, CONTAINMENT SUMP A HI LVL, is received.

Which of these procedures should be entered?

*A. C16 AOP1, "LOSS OF SFP INVENTORY."

*B. 1C15 AOP2, "LOSS OF COOLANT INVENTORY WITH RHR IN OPERATION."

*C. D5.2 AOP3, "DECREASING REFUELING WATER LEVEL DURING REFUELING."

*D. 1C4 AOP1, "REACTOR COOLANT LEAK."

*ANSWER C
*COGNITIVE Analysis
*REFSPECIFIC C47016-0504 step 4, D5.2 AOP3 symptom 2.1.3
*MODULE P8182L-003
*OBJECTIVE 6
*ABASIS Incorrect, entry condition is leak from SFP or lowering level in the SFP; the alarms indicate a problem in containment.
*BBASIS Incorrect, procedure does not apply if RCS is not intact.
*CBASIS Correct, per reference.
*DBASIS Incorrect, not applicable in refueling conditon.
*CFRBASIS 10CFR55.43(b)(5) Assessment of facility conditions and selection of appropriate procedures during normal, abnormal, and emergency situations.

*QNUM 71
*QHISTORY New
*EXAM TYPE NRC
*QDATE 5/15/00
*FACILITY 282 Prairie Island
*RTYP PWR-WEC-2
*EXLEVEL S
*AUTHOR Sonalysts, Inc.
*TIER System
*KA 035K3.03
*KAVRO 3.0
*KAVSRO 3.1
*QUESTION
Given the following conditions on Unit 1:

- One safety valve on 11 SG failed open with the plant at 100% power.
- The reactor was tripped and 11 SG isolated per E-2, "Faulted Steam Generator Isolation."
- The failed safety valve has been gagged shut and SI has been terminated.
- 11 SG level is 0% NR, 3% WR.
- TSC requests level be restored in 11 SG.
- The Shift Supervisor has transitioned to FR-H.5, "Response to Steam Generator Low Level."

Which of the following describes the AFW flow rate used to restore level in 11 S/G?

*A. Greater than 200 gpm until WR level is greater than 7%.

*B. Less than 100 gpm until WR level is greater than 7%.

*C. Greater than 200 gpm until NR level is greater than 10%.

*D. Less than 100 gpm until NR level is greater than 10%.

*ANSWER B
*COGNITIVE Memory
*REFSPECIFIC BACKGROUND INFORMATION FOR 1FR-H.5, page 2
*MODULE P8197L-014
*OBJECTIVE 19
*ABASIS Incorrect, exceeds limit.
*BBASIS Correct, limit 100 gpm until WR>7% to limit thermal stress on dry SG tubes.
*CBASIS Incorrect, exceeds limit.
*DBASIS Incorrect, once WR>7% can fill at any rate.
*CFRBASIS 10CFR55.43(b)(5) Assessment of facility conditions and selection of appropriate procedures.

*QNUM 72
*QHISTORY Bank # 8174L-001 003
*EXAM TYPE NRC
*QDATE 5/15/00
*FACILITY 282 Prairie Island
*RTYP PWR-WEC-2
*EXLEVEL B
*AUTHOR Sonalysts, Inc.
*TIER System
*KA 039K4.05
*KAVRO 3.7
*KAVSRO 3.7
*QUESTION
Given the following conditions on Unit 1:

- Hot shutdown.
- Main steam line break in the Auxiliary Building upstream of the MSIV.

Which of the following signals would automatically close ONLY the MSIV on the affected steam line?

*A. Hi-Hi steam flow and CI and Lo-Lo Tavg

*B. Hi-Hi containment pressure

*C. Containment isolation and SI

*D. Hi steam flow and Lo-Lo Tavg and SI

*ANSWER D
*COGNITIVE Memory
*REFSPECIFIC Fig. B18C-03
*MODULE P8174L-001
*OBJECTIVE 3d
*ABASIS Incorrect, CI not used
*BBASIS Incorrect, closes both MSIVs
*CBASIS Incorrect, not used in this combination
*DBASIS Correct, per reference.
*CFRBASIS N/A

*QNUM 73
*QHISTORY New
*EXAM TYPE NRC
*QDATE 5/15/00
*FACILITY 282 Prairie Island
*RTYP PWR-WEC-2
*EXLEVEL B
*AUTHOR Sonalysts, Inc.
*TIER System
*KA 055K4.02
*KAVRO 2.4
*KAVSRO 2.6
*QUESTION
Given the following conditions on Unit 1:

- Unit is in Hot Shutdown with secondary plant startup in progress.
- Normal air ejectors are in service.
- One hogger is operating to assist in drawing a vacuum in the main condenser.
- Ventilation systems lined up for normal at-power operation.

Which of the following describes effluent monitoring of noncondensible gases removed from the condenser?

*A. All noncondensible gases discharged from the condenser are monitored by 1R-15 and the Auxiliary Building vent stack monitors.

*B. All noncondensible gases discharged from the condenser are monitored by 1R-15 and the Shield Building vent stack monitors.

*C. Only the main air ejector discharge is monitored by 1R-15 and the Auxiliary Building vent stack monitors.

*D. Only the main air ejector discharge is monitored by 1R-15 and the Shield Building vent stack monitors.

*ANSWER C
*COGNITIVE Comprehensive
*REFSPECIFIC B26, page 2 and Figures B26-01 and B37A-01
*MODULE P8174L-001
*OBJECTIVE 3d
*ABASIS Incorrect, per reference.
*BBASIS Incorrect, per reference.
*CBASIS Correct, the hoggers are used during periods of excessive air in leakage, however, they exhaust directly to atmosphere through a silencer without monitoring for radioactivity. The main air ejector discharge is monitored by R-15 and then is exhausted to the Aux Bldg Vent System. The main air ejector discharge can be lined up to the Shield Bldg Vent System or to the Turbine Bldg Vent System, but these are abnormal lineups.
*DBASIS Incorrect, per reference.
*CFRBASIS N/A

*QNUM 74
*QHISTORY New
*EXAM TYPE NRC
*QDATE 5/15/00
*FACILITY 282 Prairie Island
*RTYP PWR-WEC-2
*EXLEVEL B
*AUTHOR Sonalysts, Inc.
*TIER System
*KA 062A2.02
*KAVRO 2.2
*KAVSRO 2.6
*QUESTION
Which of the following will actuate protection for the main generator if a ground fault developed on phase B of the stator winding?

*A. Unbalanced phase currents.

*B. Excessive phase angle.

*C. Excessive current phase to ground.

*D. Excessive phase current.

*ANSWER C
*COGNITIVE Analysis
*REFSPECIFIC B22B section 3.4.1
*MODULE P8186L-001
*OBJECTIVE 7c
*ABASIS Incorrect, protects against faults external to generator.
*BBASIS Incorrect, protects against internal faults by comparing current entering and leaving; would require phase to phase fault.
*CBASIS Correct, per reference. Ground faults are measured by a transformer between phase and ground, with excessive voltages on the secondary indicating a ground fault.
*DBASIS Incorrect, phase current would not be affected by a single phase fault to ground.
*CFRBASIS N/A

*QNUM 75
*QHISTORY New
*EXAM TYPE NRC
*QDATE 5/15/00
*FACILITY 282 Prairie Island
*RTYP PWR-WEC-2
*EXLEVEL B
*AUTHOR Sonalysts, Inc.
*TIER System
*KA 064G2.4.47
*KAVRO 3.4
*KAVSRO 3.7
*QUESTION
Given the following conditions on Unit 1:

- D1 24-hour run in progress.
- D1 is loaded to 3000 KW.
- The Turbine Building Operator is reporting trends in parameters to the Control Room.

Which of the following trends over the past hour is the most threatening to the continuity of electrical power from D1?

*A. Fuel oil filter differential pressure increased from 9 psid to 11 psid.

*B. Crankcase vacuum decreased from 5.2 inches H_20 to 2.3 inches H_20.

*C. Engine lube oil temperature increased from 183°F to 203°F.

*D. Jacket coolant pump discharge trended from 34.5 psig to 34 psig.

*ANSWER B
*COGNITIVE Comprehension
*REFSPECIFIC B38A, page 20 and 1C20.7, page 5
*MODULE P8186L-004
*OBJECTIVE 5c
*ABASIS Incorrect, at a differential pressure of 10 psid a work request should be submitted.
*BBASIS Correct, high crankcase pressure may result in an explosion that would disable D1 and could injure personnel. 2.3 inches H_20 is near the high crankcase pressure trip setpoint of 2 inches H_20.
*CBASIS Incorrect, 205°F is the upper end of the automatic control band.
*DBASIS Incorrect, a ½ psig change in jacket coolant pump discharge pressure is NOT an indicator of a problem with the same significance as B.
*CFRBASIS N/A

*QNUM 76
*QHISTORY New
*EXAM TYPE NRC
*QDATE 5/15/00
*FACILITY 282 Prairie Island
*RTYP PWR-WEC-2
*EXLEVEL B
*AUTHOR Sonalysts, Inc.
*TIER System
*KA 073K5.03
*KAVRO 2.9
*KAVSRO 3.4
*QUESTION
Given the following conditions on Unit 1:

- Fuel failure has been verified.
- Unit 1 is shutting down in compliance with Technical Specifications.

To reestablishing letdown flow, C12.1, "CVCS Letdown, Charging and Seal Water Injection," directs the operator to isolate the letdown line if RCS activity is greater than 1 x 10^4 uci/cc. Which of the following describes the expected indications of the radiation monitors for this activity level?

*A. Charging pump rad monitor R-4 is 5 R/hr and increasing
Letdown monitor R-9 is 1 R/hr and increasing

*B. Charging pump rad monitor R-4 is 1 R/hr and increasing
Letdown monitor R-9 is 5 R/hr and increasing

*C. Charging pump rad monitor R-4 is 5 R/hr and increasing
Letdown monitor R-9 is 5 R/hr and increasing

*D. Charging pump rad monitor R-4 is 10 R/hr
Letdown monitor R-9 is 10 R/hr

*ANSWER D
*COGNITIVE Memory
*REFSPECIFIC C12.1, Caution 4.8, Caution Sections 5.4 and 5.6
*MODULE P8172L-001a
*OBJECTIVE 8
*ABASIS Incorrect, R-9 indication is too low to require isolation.
*BBASIS Incorrect, R-9 indication is too low to require isolation.
*CBASIS Incorrect, R-9 indication is too low to require isolation.
*DBASIS Correct answer. Per referenced caution, letdown must be isolated if R-9 is reading greater than 10 R/HR; in addition R-4 and R-36 would be pegged high. R-36 indicating range is 10^{-1} to 10^4 mr/hr. R-4 and R-9 ranges of indication are 10^{-4} to 10^1 R/hr.
*CFRBASIS 10CFR55.43(b)(5) Assessment of facility conditions and selection of appropriate procedures

*QNUM 77
*QHISTORY New
*EXAM TYPE NRC
*QDATE 5/15/00
*FACILITY 282 Prairie Island
*RTYP PWR-WEC-2
*EXLEVEL B
*AUTHOR Sonalysts, Inc.
*TIER System
*KA 075K4.01
*KAVRO 2.5
*KAVSRO 2.8
*QUESTION
Which of the following ensures that the ultimate heat sink for reactor safety is maintained on a long-term basis after a design-basis earthquake?

*A. Plant screenhouse.

*B. Intake screenhouse.

*C. Emergency intake bay and piping.

*D. 121 Cooling Water Pump.

*ANSWER C
*COGNITIVE Memory
*REFSPECIFIC B35 section 3.9.1, AB-3 step 2.4.4
*MODULE P8176L-003
*OBJECTIVE 1
*ABASIS Incorrect, canal walls assumed to fail and block intake and lock and dam #3 to fail, reducing water level.
*BBASIS Incorrect, canal walls assumed to fail and block intake.
*CBASIS Correct, ensures CL Safeguards pumps have a water supply from the deepest part of the river in the event of a loss of Lock and Dam #3.
*DBASIS Incorrect, redundant safeguards cooling water pumps exist.
*CFRBASIS N/A

*QNUM 78
*QHISTORY New
*EXAM TYPE NRC
*QDATE 5/15/00
*FACILITY 282 Prairie Island
*RTYP PWR-WEC-2
*EXLEVEL B
*AUTHOR Sonalysts, Inc.
*TIER System
*KA 079A4.01
*KAVRO 2.7
*KAVSRO 2.7
*QUESTION
In order to align Station Air to supply Instrument Air upstream of the air dryers, the operator must...

*A. Open crossconnect valves SA-12-19 and SA-12-18 and verify dryer bypass valve MV-32363 in automatic.

*B. Open manual cross connect valve CP-40-7 and verify one station air compressor in manual, the other in standby.

*C. Open MV-32318, Service Air Header Isolation Valve, and verify station air pressure greater than instrument air pressure.

*D. Open MV-32321, Header Cross Connect, and verify Instrument Air pressure greater than 85 psig.

*ANSWER B
*COGNITIVE Comprehension
*REFSPECIFIC C34, page 5 and Figure B34-01
*MODULE P8178L-005
*OBJECTIVE 8
*ABASIS Incorrect, this path connects downstream of the instrument air dryers and is characterized by having 2 manual isolation valves.
*BBASIS Correct, CP-40-7 connects station air to the instrument air system upstream of the air dryers. When supplying IA, one of the station air compressors must be in manual to compensate for different loading setpoints.
*CBASIS Incorrect, MV-32318 is the crossconnect valve for supplying station air from instrument air.
*DBASIS Incorrect, MV-32318 is the crossconnect valve for supplying station air from instrument air.
*CFRBASIS N/A

*QNUM 79
*QHISTORY Bank # P8180L-001 005
*EXAM TYPE NRC
*QDATE 5/15/00
*FACILITY 282 Prairie Island
*RTYP PWR-WEC-2
*EXLEVEL B
*AUTHOR Sonalysts, Inc.
*TIER System
*KA 103A3.01
*KAVRO 3.9
*KAVSRO 4.2
*QUESTION
Given the following conditions on Unit 1:

- Cold shutdown during an outage.
- Containment in-service purge is in operation.
- Spent Fuel Pool Ventilation monitor R-25 high alarm has actuated.

Which of the following describes the automatic response of the containment in-service purge system?

*A. Discharge aligns to containment.

*B. Discharge aligns to Aux Building special ventilation.

*C. Supply to and exhaust from containment isolates.

*D. Supply from spent fuel pool ventilation isolates.

*ANSWER C
*COGNITIVE Memory
*REFSPECIFIC Fig B19-9; ARP 47047 R-25
*MODULE P8180L-009E
*OBJECTIVE 9
*ABASIS Incorrect, containment isolates.
*BBASIS Incorrect, aligned to Shield Building ventilation.
*CBASIS Correct, per reference.
*DBASIS Incorrect, supply opens.
*CFRBASIS N/A

*QNUM 80
*QHISTORY Bank # P8180L-003 017
*EXAM TYPE NRC
*QDATE 5/15/00
*FACILITY 282 Prairie Island
*RTYP PWR-WEC-2
*EXLEVEL B
*AUTHOR Sonalysts, Inc.
*TIER System
*KA 005K6.11
*KAVRO 2.3
*KAVSRO 2.7
*QUESTION
Given the following plant conditions:

- Reactor coolant system temperature is 320°F.
- Reactor coolant system pressure is 370 psig.
- RHR cooldown is in operation with 11 and 12 RHR pumps running, 11 and 12 RHR heat exchangers in service.
- A cooldown rate of 80°F/hour has been established.

Which of the following failures will result in the greatest cooldown rate?

*A. Loss of control air to 11 RHR HX OUTLET flow control valve CV-31235.

*B. Loss of power to 11 RHR HX CC inlet valve MV-32093.

*C. The bellows in RHR flow detector FT-626 fails by rupturing.

*D. Loss of control air to the RHR HX bypass flow control valve CV-31237.

*ANSWER A
*COGNITIVE Comprehension
*REFSPECIFIC P8180L-003, page 25-27; 1C15 AOP3 page 3-4.
*MODULE P8180L-003
*OBJECTIVE 6
*ABASIS Correct, CV-31235 will fail wide open on a loss of control air, maximizing cooldown.
*BBASIS Incorrect, the motor operated valve will "fail as is," resulting in no change in CC cooling flow for the cooldown.
*CBASIS Incorrect, this will increase bypass flow around the heat exchanger to maximum.
*DBASIS Incorrect, this will cause the bypass valve to fail closed and RHR flow will drop to flow allowed by the HX outlet FCV, which will be less than in a.
*CFRBASIS N/A

*QNUM 81
*QHISTORY New
*EXAM TYPE NRC
*QDATE 5/15/00
*FACILITY 282 Prairie Island
*RTYP PWR-WEC-2
*EXLEVEL S
*AUTHOR Sonalysts, Inc.
*TIER System
*KA 008G2.4.11
*KAVRO 3.4
*KAVSRO 3.6
*QUESTION
With Unit 1 operating at 100%, the following annunciators have gone into alarm over the past 10 minutes:

- 11 CC SURGE HI/LO LVL
- CC SYSTEM LIQUID MONITOR (1R-39)
- 11 RCP THERMAL BARRIER CC WATER HI FLOW

Which of the following procedures provides the optimal path to respond to these indications?

*A. 1E-0, "Reactor Trip or Safety Injection"

*B. 1C14 AOP1, "Loss of Component Cooling"

*C. 1C1.4 AOP1, "Rapid Power Reduction – Unit 1"

*D. 1C14 AOP2, "Leakage Into the Component Cooling System"

*ANSWER D
*COGNITIVE Comprehension
*REFSPECIFIC ARP's 47020:0203, 47047 1R-39, 47015:0108
*MODULE P8172L-002
*OBJECTIVE 6c
*ABASIS Incorrect, RCP trip not required.
*BBASIS Incorrect, CC loss not indicated.
*CBASIS Incorrect, power reduction not required.
*DBASIS Correct, leakage into CC is indicated.
*CFRBASIS 10CFR55.43(b)(5) Assessment of facility conditions and selection of appropriate procedures

*QNUM 82
*QHISTORY New
*EXAM TYPE NRC
*QDATE 5/15/00
*FACILITY 282 Prairie Island
*RTYP PWR-WEC-2
*EXLEVEL B
*AUTHOR Sonalysts, Inc.
*TIER System
*KA 076K3.05
*KAVRO 3.0
*KAVSRO 3.2
*QUESTION

Given the following conditions on Unit 1:

- The plant was at 100% power with 121 CL pump OOS.
- A safety injection due to a LOCA with coincident loss of offsite power occurred.
- 22 Diesel Cooling Water pump failed to start.
- All other safety equipment operated per design.

For present plant conditions, which of the following describes the optimum RHR alignment to provide for continued long-term decay heat removal?

*A. 11 RHR pump to 11 RHR heat exchanger.

*B. 11 and 12 RHR pumps to 11 RHR heat exchanger.

*C. 11 RHR pump to 11 and 12 RHR heat exchangers.

*D. 11 and 12 RHR pumps to 11 and 12 RHR heat exchangers.

*ANSWER A
*COGNITIVE Analysis
*REFSPECIFIC C35 AOP1 page 12.
*MODULE P8176L-003 & P8172L-002
*OBJECTIVE 12
*ABASIS Correct, no safeguards pumps are available for Loop B cooling water due to failures. C35 AOP1 will verify Train A loads available and then isolate Train B loads, including CC. Per the note, the CC pump could run for 30-60 minutes but then all Train B loads would have to be shut down on high CC temperature.
*BBASIS Incorrect, CC will be required to run 12 RHR pump in recirculation.
*CBASIS Incorrect, cannot supply both CCHXs from Train A CC alone, would require >5000 gpm and CC pump can supply only 4000 gpm.
*DBASIS Incorrect, no B train CL so must stop Train B components.
*CFRBASIS N/A

*QNUM 83
*QHISTORY Bank #P8178L-005 002
*EXAM TYPE NRC
*QDATE 5/15/00
*FACILITY 282 Prairie Island
*RTYP PWR-WEC-2
*EXLEVEL B
*AUTHOR Sonalysts, Inc.
*TIER System
*KA 078G2.4.31
*KAVRO 3.3
*KAVSRO 3.4
*QUESTION
Given the following plant conditions:

- Unit 1 operating at 100% reactor power.
- 121 and 122 air compressors are running in PREFERRED mode.
- 123 air compressor is in FIRST STANDBY mode.
- 124 air compressor is running in PREFERRED mode.
- 125 air compressor is in STANDBY mode.

A Unit 1 instrument air header rupture causes instrument air header pressure to rapidly decrease to 68 psig. Which of the following describes the instrument and station air system automatic actions for this failure?

*A. 123 air compressor starts, the Unit 1 instrument air header isolation valve closes, and 121 air dryer bypass valve opens.

*B. 125 air compressor starts, service air header isolation opens, and 121 air dryer bypass closes.

*C. 123 air compressor starts, station air receiver to instrument air supply header valves open, and 121 air dryer bypass opens.

*D. 125 air compressor starts, station air receiver to instrument air supply heater opens, and 121 air dryer bypass closes.

*ANSWER A
*COGNITIVE Comprehension
*REFSPECIFIC B34 pages 9, 12, 13
*MODULE #P8178L-005
*OBJECTIVE 3
*ABASIS Correct, the 123 air compressor will start on low air header pressure at 90 psig, the Unit 1 instrument air header isolation valve (MV-32314) will close at 80 psig, and the 121 air dryer bypass valve (MV-32362) opens at 78psig.
*BBASIS Incorrect, 125 air compressor does not start – the service air and instrument headers are not normally cross-connected. Also the service air header isolation (MV32318) does not open – but if open will close on low pressure. The 121 air dryer bypass (MV-32362) also does not close – it opens on a decreasing dryer pressure of 78 psig.
*CBASIS Incorrect, station air receiver to instrument air supply header CV-39302 opens to maintain station air pressure at 88 psig, but CV-39301 does not open – it will close at 83 psig decreasing pressure.
*DBASIS Incorrect, 125 air compressor does not start – the service air and instrument headers are not normally cross-connected. Also, station air receiver to instrument air supply header CV-39302 opens to maintain station air pressure at 88 psig, but CV-39301 does not open – it will close at 83 psig decreasing pressure. The 121 air dryer bypass (MV-32362) also does not close – it opens on a decreasing dryer pressure of 78 psig.
*CFRBASIS N/A

*QNUM 84
*QHISTORY Bank #P9150L-003 006
*EXAM TYPE NRC
*QDATE 5/15/00
*FACILITY 282 Prairie Island
*RTYP PWR-WEC-2
*EXLEVEL S
*AUTHOR Sonalysts, Inc.
*TIER Generic
*KA 2.1.1 Knowledge of conduct of operations requirements
*KAVRO 3.7
*KAVSRO 3.8
*QUESTION
The following occurs on a weekend with only duty shift personnel available.

Which situation below would:
-Require a Temporary Change Notice but NOT require a Procedure Change Submittal, AND
-Require no reviews or approvals by other than the two SRO's?

*A. A manual valve must be substituted for an inoperable MOV to accomplish the intent of a procedural step.

*B. A MOV did not meet the stroke time requirement in the SP but the engineer states on the phone a longer time is acceptable.

*C. Numbered steps of 1C1.2, Unit 1 Startup, are required to be performed out of sequence.

*D. A draft procedure has to be used before it has been formally approved.

*ANSWER A
*COGNITIVE Comprehension
*REFSPECIFIC 5AWI 1.6.0 section 6.
*MODULE P9150L-003
*OBJECTIVE 9
*ABASIS Correct, meets criteria for a one-time use and not change in scope or intent.
*BBASIS Incorrect, cannot change intent without additional reviews.
*CBASIS Incorrect, changing the sequencing of steps in C1.2 is allowed by procedural notes.
*DBASIS Incorrect, no provision is made to use new draft procedures without formal approval.
*CFRBASIS 10 CFR 55.43(b)(3) Facility license procedures required for operating changes in the facility.

*QNUM 85
*QHISTORY Modified from Bank #P9150L-004 001
*EXAM TYPE NRC
*QDATE 5/15/00
*FACILITY 282 Prairie Island
*RTYP PWR-WEC-2
*EXLEVEL S
*AUTHOR Sonalysts, Inc.
*TIER Generic
*KA 2.1.4 Shift Staffing Requirements
*KAVRO 2.3
*KAVSRO 3.4
*QUESTION
Midway through a midnight shift, the Shift Manager is rushed to the hospital due to an apparent seizure. Which of the following conditions meets Technical Specification requirements?

Technical Specifications are met if:

*A. Unit 1 is in Refueling and Unit 2 is in Power Operation.

*B. Unit 1 and Unit 2 are in Hot Shutdown.

*C. Another SM is called and takes the duty within two hours.

*D. The Unit 1 SS is qualified as Shift Manager.

*ANSWER C
*COGNITIVE Comprehension
*REFSPECIFIC SWI 0-2, page 4 & 16; TS 6.0.B.3
*MODULE P9150L-004
*OBJECTIVE 4
*ABASIS Incorrect, the Shift Manager/STA position is to be manned unless both units are in cold shutdown or refueling.
*BBASIS Incorrect, the Shift Manager/STA position is to be manned unless both units are in cold shutdown or refueling.
*CBASIS Correct, replacement operator must assume the watch within two hours.
*DBASIS Incorrect, the Shift Manager/STA position is still to be manned.
*CFRBASIS 10 CFR 55.43(b)(2) facility operating limitations and technical specifications.

*QNUM 86
*QHISTORY New
*EXAM TYPE NRC
*QDATE 5/15/00
*FACILITY 282 Prairie Island
*RTYP PWR-WEC-2
*EXLEVEL S
*AUTHOR Sonalysts, Inc.
*TIER Generic
*KA 2.1.6 Supervise and manage during plant transients and upset conditions
*KAVRO 2.1
*KAVSRO 4.3
*QUESTION
The reactor has just tripped from 100% power after 210 days of continuous operation. Which of the following describes the crew responsibilities for implementing the required emergency actions?

The Shift Supervisor shall obtain E-0, while the Control Room operators...

*A. WAIT to implement immediate actions until the Shift Supervisor has the procedure ready to start on step 1.

*B. Implement immediate actions from memory until the Shift Supervisor starts reading the next step to them.

*C. Implement immediate actions from memory until they are completed, then the Shift Supervisor starts reading at step 1.

*D. Implement immediate actions from memory until the Shift Supervisor has the procedure ready to start reading at step 1.

*ANSWER D
*COGNITIVE Comprehension
*REFSPECIFIC SWI O-10 section 7.9.9
*MODULE P8197L-010
*OBJECTIVE 7
*ABASIS Incorrect, the immediate actions are implemented simultaneously while obtaining the appropriate procedures.
*BBASIS Incorrect, all immediate actions are NOT required to be implemented prior to using the appropriate procedures, and reading starts at Step 1.
*CBASIS Incorrect, the immediate actions are implemented simultaneously while obtaining the appropriate procedures. Immediate actions do not need to be completed before the SS begins reading at Step 1.
*DBASIS Correct, the immediate actions are implemented simultaneously while the affected unit or unaffected unit shift supervisor (if required) gets the appropriate procedure(s) in hand and is ready to start on step 1.
*CFRBASIS 10 CFR 55.43(b)(5) Assessment of facility conditions during emergency situations and selection of appropriate procedures.

*QNUM 87
*QHISTORY Modified from Bank #P8172L-001A 036 & 038
*EXAM TYPE NRC
*QDATE 5/15/00
*FACILITY 282 Prairie Island
*RTYP PWR-WEC-2
*EXLEVEL B
*AUTHOR Sonalysts, Inc.
*TIER Generic
*KA 2.1.34 Maintain primary and secondary plant chemistry within limits
*KAVRO 2.3
*KAVSRO 2.9
*QUESTION
Which of the following statements describes a CVCS chemical process used to maintain reactor coolant system chemistry within specifications?

*A. Saturated mixed bed demineralizers are used to remove excess lithium (Li) ions from the reactor coolant system.

*B. Cation demineralizers are used to reduce the concentration of cesium (Cs) that may result from fuel defects.

*C. Hydrazine (N_2H_2) is added to the reactor coolant system while at power to scavenge dissolved oxygen (O_2) to reduce corrosion of system components.

*D. Hydrogen Peroxide (H_2O_2) is added to the reactor coolant system while shut down and cooled down to reduce the hydrogen (H_2) concentration prior to depressurizing.

*ANSWER B
*COGNITIVE Memory
*REFSPECIFIC P8172L-001a page 33 and 34
*MODULE P8172L-001A
*OBJECTIVE 2
*ABASIS Incorrect, saturated mixed bed demins will add Li^+ to the RCS.
*BBASIS Correct, cation demins will remove Cs from failed fuel.
*CBASIS Incorrect, hydrazine is NOT added at power.
*DBASIS Incorrect, H_2O_2 is NOT a hydrogen scavenging agent.
*CFRBASIS N/A

*QNUM 88
*QHISTORY New
*EXAM TYPE NRC
*QDATE 5/15/00
*FACILITY 282 Prairie Island
*RTYP PWR-WEC-2
*EXLEVEL S
*AUTHOR Sonalysts, Inc.
*TIER Generic
*KA 2.2.2 Manipulate controls between shutdown and power levels
*KAVRO 4.0
*KAVSRO 3.5
*QUESTION
Which of the following describes licensed operator responsibilities for proper control of core reactivity?

*A. Shift management is responsible to supervise only planned reactor power load changes of greater than 15%.

*B. An SRO and RO with no other concurrent duties shall be designated to perform a reactor startup.

*C. The RO must communicate all routine reactivity changes to the Unit Shift Supervisor.

*D. In emergency situations, reactivity changes may be initiated only with the approval of the Unit Shift Supervisor.

*ANSWER B
*COGNITIVE Memory
*REFSPECIFIC SWI 0-50 page 3 & 5; C1B section 5.1.2
*MODULE P9150L-014
*OBJECTIVE 1c
*ABASIS Incorrect, shift management is responsible to supervise load changes of > 5% power.
*BBASIS Correct, per C1B.
*CBASIS Incorrect, may tell SS or another RO/SRO.
*DBASIS Incorrect, the Reactor Operator may perform this on his/her own initiative.
*CFRBASIS 10 CFR 55.43(b)(5) Assessment of facility conditions during normal situations and selection of appropriate procedures.

*QNUM 89
*QHISTORY New
*EXAM TYPE NRC
*QDATE 5/15/00
*FACILITY 282 Prairie Island
*RTYP PWR-WEC-2
*EXLEVEL S
*AUTHOR Sonalysts, Inc.
*TIER Generic
*KA 2.2.12 Knowledge of surveillance procedures
*KAVRO 3.0
*KAVSRO 3.4
*QUESTION
A review of the Technical Specifications Essential Equipment Database has determined that a Hi-Hi Steam Generator Level Feedwater Isolation Semiannual surveillance procedure time interval was exceeded. Which of the following describes the actions that should be taken by Technical Specifications? The system is to be declared inoperable:

*A. As of the late date and immediate action must be taken to comply with the applicable Specification.

*B. As of the late date, but action to comply with the applicable Specification may be delayed up to 24 hours to permit completion of the surveillance.

*C. At the time of discovery and immediate action must be taken to comply with the applicable Specification.

*D. At the time of discovery, but action taken to comply with the applicable Specification may be delayed for up to 24 hours to permit completion of the surveillance.

*ANSWER D
*COGNITIVE Comprehension
*REFSPECIFIC P8171L-009 page 19, 23 & 24 and Technical Specification 4.0.B
*MODULE P9150L-016
*OBJECTIVE 3
*ABASIS Incorrect, improper start time of LCO and no delay.
*BBASIS Incorrect, improper start time.
*CBASIS Incorrect, immediate entry into the action statement may be delayed for up to 24 hours.
*DBASIS Correct, initial conditions allow determination that the implementation of the action statement may be delayed for up to 24 hours to permit completion of the surveillance.
*CFRBASIS 10 CFR 55.43(b)(2) Facility operating limitations and technical specifications.

*QNUM 90
*QHISTORY New
*EXAM TYPE NRC
*QDATE 5/15/00
*FACILITY 282 Prairie Island
*RTYP PWR-WEC-2
*EXLEVEL S
*AUTHOR Sonalysts, Inc.
*TIER Generic
*KA 2.2.21 Knowledge of pre- and post- maintenance operability requirements
*KAVRO 2.3
*KAVSRO 3.5
*QUESTION

During an outage, work is completed on a component, but the specified post-maintenance testing requires plant conditions that cannot be established for another week. The work order is at a Status 90.

The Shift Supervisor reviewing the work package should:

*A. Hold the work order open until testing is complete.

*B. Initiate a new work order for the post-maintenance testing and close the original work order.

*C. Close the work order; post-maintenance testing is separate from the work.

*D. Place the testing on the WRAC list of required tests and close the work order.

*ANSWER A
*COGNITIVE Comprehension
*REFSPECIFIC 5AWI 3.12.4 sect. 6.2.8
*MODULE P9150L-005
*OBJECTIVE 2
*ABASIS Correct, per reference.
*BBASIS Incorrect, required testing is already specified in the work order.
*CBASIS Incorrect, required testing is already specified in the work order.
*DBASIS Incorrect, only if specified to do this in the work order.
*CFRBASIS 10 CFR 55.43(b)(5) Assessment of facility conditions during normal situations and selection of appropriate procedures.

*QNUM 91
*QHISTORY Modified from Bank # P9130L-003 001
*EXAM TYPE NRC
*QDATE 5/15/00
*FACILITY 282 Prairie Island
*RTYP PWR-WEC-2
*EXLEVEL B
*AUTHOR Sonalysts, Inc.
*TIER Generic
*KA 2.3.1 Knowledge of 10CFR20 and facility radiation control requirements
*KAVRO 2.6
*KAVSRO 3.0
*QUESTION
A male employee who is 20 years old has received the following exposure:

- Current Total Effective Dose Equivalent (TEDE) for the year to date is 4200 mrem.
- Current Deep Dose Equivalent (DDE) for the year to date is 700 mrem.
- Current Committed Effective Dose Equivalent (CEDE) for the year to date is 3500 mrem.
- Current Total Organ Dose Equivalent (TODE) for the year to date is 300 mrem.

Assuming his exposure is properly documented and appropriate management approval is received, which of the following is the MAXIMUM additional whole body exposure the operator can receive this year without exceeding his 10CFR20 exposure limits?

*A. 500 mrem

*B. 800 mrem

*C. 1200 mrem

*D. 1500 mrem

*ANSWER B
*COGNITIVE Comprehension
*REFSPECIFIC 10CFR20 subpart C ¶20.1201 (a)(1)(i); F2 page 19 & 20
*MODULE P9130L-003
*OBJECTIVE 3
*ABASIS Incorrect, TODE and CEDE are separate total dose limits.
*BBASIS Correct, see proof below.
*CBASIS Incorrect, TODE and CEDE are separate total dose limits.
*DBASIS Incorrect, exceeds the maximum exposure that could be received.
*CFRBASIS N/A

The maximum TEDE allowed is 5 Rem per year.
The individual has exceeded the administrative guideline of 2 Rem per year, but management approval has been given.

TEDE = DDE + CEDE
Maximum TEDE = 5000 mrem - 4200 mrem
Maximum additional TEDE = 800 mrem

*QNUM 92
*QHISTORY Bank # P9130L-003 013
*EXAM TYPE NRC
*QDATE 5/15/00
*FACILITY 282 Prairie Island
*RTYP PWR-WEC-2
*EXLEVEL B
*AUTHOR Sonalysts, Inc.
*TIER Generic
*KA 2.3.2 Knowledge of facility ALARA program
*KAVRO 2.5
*KAVSRO 2.9
*QUESTION

One of the ALARA program's objectives is to keep the annual integrated dose for all station workers as low as reasonably achievable. Which of the following is a method used to minimize integrated dose at Prairie Island?

*A. Dissolved hydrogen is maintained in the reactor coolant system during power operation.

*B. Portable shielding is always used in all work near hot spots.

*C. CVCS letdown flow rate is minimized during plant outages.

*D. Power changes are performed at the maximum rate allowed by procedure.

*ANSWER A
*COGNITIVE Memory
*REFSPECIFIC F2 page 3
*MODULE P9130L-003
*OBJECTIVE 1
*ABASIS Correct, this reduces the corrosion rates of metals within the reactor coolant system reducing radiation exposure to personnel from corrosion products.
*BBASIS Incorrect, shielding is used only if it will lower the total dose when installation and removal are considered.
*CBASIS Incorrect, purification flow is maximized to reduce radiation exposure by reducing radioactive corrosion products in the reactor coolant system.
*DBASIS Incorrect, power changes are controlled to reduce the probability of a fuel pin defect releasing fission products to the reactor coolant system increasing radiation exposure.
*CFRBASIS N/A

*QNUM 93
*QHISTORY New
*EXAM TYPE NRC
*QDATE 5/15/00
*FACILITY 282 Prairie Island
*RTYP PWR-WEC-2
*EXLEVEL S
*AUTHOR Sonalysts, Inc.
*TIER Generic
*KA 2.3.3 Knowledge of SRO responsibilities for auxiliary systems outside of the control room (e.g. waste disposal, and handling systems)
*KAVRO 1.8
*KAVSRO 2.9
*QUESTION
Given the following plant conditions:

- Unit 1 Steam Generator Blowdown flow is being discharged to the river.
- Radiation Monitor 1R-19 has just lost power.

Which of the following actions should be taken?

*A. Either discharge flow must be terminated or obtain periodic effluent grab samples.

*B. Reset blowdown in the Auxiliary Building and reopen the blowdown control valves.

*C. IF R-18 discharge line monitor is operable, discharge may be continued.

*D. Terminate discharge flow until 1R-19 is returned to service.

*ANSWER A
*COGNITIVE Comprehension
*REFSPECIFIC P8182L-001 pages 27-32 &41-42; P8182L-002 pages 27-28; C21.1.3.2 page 3-5
*MODULE P8182L-001 & P8182L-002
*OBJECTIVE 6
*ABASIS Correct, sampling is now required or this would constitute an unmonitored release that must be terminated.
*BBASIS Incorrect, blowdown should not be established without process monitoring.
*CBASIS Incorrect, the S/G blowdown flash tank enters the common discharge header downstream of R-18 making R-18 ineffective in monitoring a continued discharge.
*DBASIS Incorrect, discharge can be continued with appropriate sampling.
*CFRBASIS 10 CFR 55.43(b)(4) Radiation hazards that may arise during normal and abnormal situations.

*QNUM 94
*QHISTORY New
*EXAM TYPE NRC
*QDATE 5/15/00
*FACILITY 282 Prairie Island
*RTYP PWR-WEC-2
*EXLEVEL B
*AUTHOR Sonalysts, Inc.
*TIER Generic
*KA 2.3.5 Use of personnel monitoring equipment
*KAVRO 2.3
*KAVSRO 2.5
*QUESTION
You have been assigned work in an area where a full anti-contamination clothing suitup is required. You have a TLD on your badge and a portable electronic dosimeter.

Which of the following describes how the TLD and the dosimeter should be worn?

*A. Both on a lanyard in the chest area.

*B. TLD on a lanyard in the chest area and the electronic dosimeter on the front of your belt.

*C. Electronic dosimeter on a lanyard in the chest area and the TLD on the front of your belt.

*D. Both on the front of your belt.

*ANSWER A
*COGNITIVE Memory
*REFSPECIFIC F2 page 22
*MODULE None
*OBJECTIVE 5
*ABASIS Correct, should be worn at the chest area when suited out in anti-Cs (on a lanyard).
*BBASIS Incorrect, per reference
*CBASIS Incorrect, per reference
*DBASIS Incorrect, per reference
*CFRBASIS N/A

*QNUM 95
*QHISTORY Bank #P7410L-050 018
*EXAM TYPE NRC
*QDATE 5/15/00
*FACILITY 282 Prairie Island
*RTYP PWR-WEC-2
*EXLEVEL B
*AUTHOR Sonalysts, Inc.
*TIER Generic
*KA 2.3.10 Perform procedures to reduce excessive levels of radiation exposure
*KAVRO 2.9
*KAVSRO 3.3
*QUESTION
Which of the following describes the benefit of administering Potassium Iodide (KI) tablets to personnel in emergency situations?

*A. Saturates the thyroid with iodine to prevent accumulation of radioactive iodine.

*B. Inhibits absorption of radioactive iodine by lining the gastrointestinal tract with a protective coating.

*C. Saturates the bloodstream with iodine to reduce the ingestion of airborne radioiodine.

*D. Combines with radioactive iodine to form molecules that are easily removed with body waste.

*ANSWER A
*COGNITIVE Memory
*REFSPECIFIC F3-18 Figure 1
*MODULE P7410L-050
*OBJECTIVE
*ABASIS Correct, iodine is absorbed by the thyroid so that any radioactive iodine will NOT be absorbed by the thyroid.
*BBASIS Incorrect, the concern for iodine is absorption in the thyroid.
*CBASIS Incorrect, the KI tablets do NOT reduce radioiodine ingestion.
*DBASIS Incorrect, the KI tablets do NOT aid in removal of radioiodine.
*CFRBASIS N/A

*QNUM 96
*QHISTORY Modified from Bank # P9170L-001 002
*EXAM TYPE NRC
*QDATE 5/15/00
*FACILITY 282 Prairie Island
*RTYP PWR-WEC-2
*EXLEVEL S
*AUTHOR Sonalysts, Inc.
*TIER Generic
*KA 2.4.1 EOP entry conditions and immediate action steps
*KAVRO 4.3
*KAVSRO 4.6
*QUESTION
Given the following plant conditions:

-Unit 2 is in reduced inventory.
-21 RHR pump and heat exchanger are in service.

Which of the following would meet entry conditions for E-4 , "Core Cooling Following Loss of RHR Flow"?

*A. Indications of air ingestion into the RHR pump are noted on ERCS.

*B. Instrument Air pressure is lost and will not be restored for 20 minutes.

*C. Safeguards Bus 25 locks out and the lockout appears to be valid.

*D. 21 RHR pump locks out and 22 RHR pump breaker fails to close.

*ANSWER D
*COGNITIVE Memory
*REFSPECIFIC 1E-4
*MODULE P8180L-003
*OBJECTIVE 8
*ABASIS Incorrect, air ingestion will affect only if pump becomes vapor bound.
*BBASIS Incorrect, would result in high flow but procedures exist to return flow to normal.
*CBASIS Incorrect, could start B train in D2 AOP's.
*DBASIS Correct, entry is made if RHR pumping capability is lost and cannot be restored in a timely manner.
*CFRBASIS 10 CFR 55.43(b)(5) Assessment of facility conditions during abnormal situations and selection of appropriate procedures.

*QNUM 97
*QHISTORY Modified from Bank #P8170L-002 038 & 044
*EXAM TYPE NRC
*QDATE 5/15/00
*FACILITY 282 Prairie Island
*RTYP PWR-WEC-2
*EXLEVEL B
*AUTHOR Sonalysts, Inc.
*TIER Generic
*KA 2.4.4 Ability to recognize abnormal indications for system operating parameters which are entry level conditions for emergency and abnormal operating procedures
*KAVRO 4.0
*KAVSRO 4.3
*QUESTION
Given the following plant conditions:

- Unit 1 at 100% power.
- Annunciator 47015-0206, 11 RCP LAB SEAL LO D/P, is alarming.
- Annunciator 47015-0306, 11 RCP SEAL LEAKOFF HI FLOW, is alarming.
- 11 RCP Seal Leakoff Flow rate is stable at 7.5 gpm.
- 11 RCP radial bearing temperature is stable at 182°F.
- #2 seal leakoff flow is approximately 0.1 gpm by RCDT level increase calculation.

Which of the following seal failure(s) have occurred on 11 RCP?

*A. #1 seal.

*B. #2 seal.

*C. #3 seal.

*D. #1 and #2 seals.

*ANSWER A
*COGNITIVE Comprehension
*REFSPECIFIC 1C3 AOP3 page 2-4
*MODULE P8170L-002
*OBJECTIVE 6
*ABASIS Correct, a failure of the No. 1 seal may be diagnosed by an increased No. 1 seal leakoff indication, increased RCP lower radial bearing water and/or No.1 seal outlet temperature, decreased labyrinth seal differential pressure and decreased No.1 seal differential pressure.
*BBASIS Incorrect, a failure of the No. 2 seal would be indicated by a DECREASE in No. 1 seal leakoff flow (normally approximately 3 gpm) with an RCP standpipe high level alarm and increasing RCDT level.
*CBASIS Incorrect, these indications are indicative of a failed No. 1 seal – the No. 3 seal is a vapor seal and no determination can be made from these conditions as to its condition.
*DBASIS Incorrect, the No. 1 seal did fail, but the No. 2 seal is performing as expected as indicated by the No. 1 seal leakoff flow remaining high.
*CFRBASIS N/A

*QNUM 98
*QHISTORY New
*EXAM TYPE NRC
*QDATE 5/15/00
*FACILITY 282 Prairie Island
*RTYP PWR-WEC-2
*EXLEVEL B
*AUTHOR Sonalysts, Inc.
*TIER Generic
*KA 2.4.11 Knowledge of abnormal condition procedures
*KAVRO 2.7
*KAVSRO 3.6
*QUESTION
Given the following conditions on Unit 2:

- Currently at 88% power, returning to 100% after one hour of testing at 80% power.
- The rod control system is in automatic with Control Bank D (CBD) at 158 steps.
- The Reactor Operator notes that rod K-7 is moving IN with NO demand signal.
- Tavg and reactor power are slowly decreasing.

Which of the following describes the required operator actions?

*A. Manually trip the reactor and go to 2E-0, "Reactor Trip or Safety Injection."

*B. Take rod control to MANUAL, if rod motion doesn't stop then manually trip the reactor.

*C. Take rod control to MANUAL, if rod motion doesn't stop then open the lift coil disconnect switch for rod K-7.

*D. Open the lift coil disconnect switch for rod K-7, if rod motion doesn't stop then manually trip the reactor.

*ANSWER C
*COGNITIVE Memory
*REFSPECIFIC 1C5 AOP2 steps 2.4.2, 2.4.3
*MODULE P8184L-005
*OBJECTIVE 12
*ABASIS Incorrect, the trip is required only if motion continues in manual with more than one rod involved.
*BBASIS Incorrect, for one rod you do not have to trip the reactor.
*CBASIS Correct, the RO is given the opportunity to stop the rod withdrawal with the ROD BANK SELECTOR to manual, then if motion continues to open the lift disconnect switch.
*DBASIS Incorrect, rods to manual is the initial action.
*CFRBASIS N/A

*QNUM 99
*QHISTORY Bank # P9150L-003 011
*EXAM TYPE NRC
*QDATE 5/15/00
*FACILITY 282 Prairie Island
*RTYP PWR-WEC-2
*EXLEVEL B
*AUTHOR Sonalysts, Inc.
*TIER Generic
*KA 2.4.19 Knowledge of EOP layout, symbols, and icons
*KAVRO 2.7
*KAVSRO 3.7
*QUESTION
Which of the following describes how Emergency Operating Procedure substeps with letters or bullets are implemented?

*A. Lettered substeps MUST be performed in order.
Bulleted substeps MUST be performed in order.

*B. Lettered substeps MUST be performed in order.
Bulleted substeps MAY be performed in any order.

*C. Lettered substeps MAY be performed in any order.
Bulleted substeps MUST be performed in order.

*D. Lettered substeps MAY be performed in any order.
Bulleted substeps MAY be performed in any order.

*ANSWER B
*COGNITIVE Memory
*REFSPECIFIC SWI O-10 section 7.9.7.c
*MODULE P8197L-010
*OBJECTIVE 2
*ABASIS Incorrect, bullet steps MAY be performed in any order.
*BBASIS Correct, in the EOPs – substeps designated by a letter must be performed in sequence and the substeps designated by a bullet may be performed in any sequential order.
*CBASIS Incorrect, all letter steps MUST be performed in sequential order and bullet steps MAY be performed in any order.
*DBASIS Incorrect, all letter steps MUST be performed in sequential order.
*CFRBASIS N/A

*QNUM 100
*QHISTORY Modified from Bank #P8197L-009 020
*EXAM TYPE NRC
*QDATE 5/15/00
*FACILITY 282 Prairie Island
*RTYP PWR-WEC-2
*EXLEVEL B
*AUTHOR Sonalysts, Inc.
*TIER Generic
*KA 2.4.34 RO tasks performed outside of the control room during emergency operations
*KAVRO 3.8
*KAVSRO 3.6
*QUESTION
The Unit 1 Shift Supervisor directs a control room evacuation due to a major fire in the Relay Room. Which of the following actions must be promptly taken by the Unit 2 Lead Plant Equipment and Reactor Operator (LPERO)?

*A. Proceed to the D5 Building and take the assigned actions to assure that safeguards Bus 25 and its associated 480V buses are energized.

*B. Proceed to the auxiliary building to disable the PORVs, Unit 1 MSIVs, and the steam supply valves to 11 TDAFWP; and align charging pump for RCS inventory control.

*C. Check that both turbines are tripped at the front standards, and then proceed with two SCBA to the hot shutdown panels.

*D. Proceed to the screenhouse and verify that fire header pressure is greater than 90 psi.

*ANSWER A
*COGNITIVE Memory
*REFSPECIFIC F5 APP.B page 6 & 37
*MODULE P8197L-009
*OBJECTIVE 4
*ABASIS Correct, initial actions as described in F5 Appendix B.
*BBASIS Incorrect, Auxiliary Building APOE actions.
*CBASIS Incorrect, these are a combination of RO duties and distraction action.
*DBASIS Incorrect, these are distraction action.
*CFRBASIS N/A

INITIAL SUBMITTAL OF THE OPERATING TEST

FOR THE PRAIRIE ISLAND INITIAL EXAMINATION THE WEEK OF MAY 15, 2000

INITIAL SUBMITTAL OF THE ADMINISTRATIVE JPMS

FOR THE PRAIRIE ISLAND INITIAL EXAMINATION THE WEEK OF MAY 15, 2000

TASK TITLE: Perform Alternate Calculation Of Reactor Thermal Power

JPM NUMBER: RC-20 Rev. 1

RELATED PRA INFORMATION (SEE PITC 2.3): None

TASK NUMBER: CRO 0150070201

K/A NUMBERS: 2.1.23

APPLICABLE METHOD OF TESTING:

Simulate Performance: ☐ Actual Performance: ☒

Evaluation Location: Turbine Building: ☐ Auxiliary Building: ☐

Simulator: ☐ Control Room: ☐

Other: TSC or EOF ☒

Time for Completion: 20 Minutes

TASK APPLICABILITY: (Check all that apply) SRO: ☒ RO: ☒ NLO: ☐

PREPARED BY: Mark Jones **DATE:** 3/21/00

REVIEWED BY: _____ **DATE:** 3/28/00

APPROVED BY: _____ **DATE:** _____

Operator: _____**(SRO / RO / NLO)**

Evaluator: _____

Date: _____

READ TO THE OPERATOR

I will explain the initial conditions, which step(s) to simulate or discuss, and provide initiating cues. When you complete the task successfully, the objective for this job performance measure will be satisfied.

INITIAL CONDITIONS:

- Unit 1 is operating at power.
- NIS inputs into the "CALM" program are OOS.
- SP 1005, "Unit 1 NIS Power Range Daily Calibration", is due.

INITIATING CUES:

- The SS directs you to perform SP 1005B, "Unit 1 Alternate Calculation Of Reactor Thermal Power", using an ERCS terminal in the TSC or EOF.

JPM PERFORMANCE INFORMATION

Required Materials: **Steam Tables and Calculator.**

General References: **SP 1005B**

Task Standards: **SP 1005B completed accurately.**

Start Time: _____

NOTE: When providing "Evaluator Cues" to the examinee, care must be exercised to avoid prompting the examinee. Typically cues are only provided when the examinee's actions warrant receiving the information (i.e. the examinee looks or asks for the indication).

NOTE: Critical steps are marked with an "X" below the performance step number. Failure to meet the standard for any critical step shall result in failure of this JPM.

Performance Step: **Critical __X__ (S-1)**	Record the Parameter sources and values for the FIRST SET of data in Table 1. N/A portions of table that are not used.
Standard:	First set of data points are recorded in Table 1: • Steam Generator Pressure • Feedwater Temperature • Feedwater Flow • Steam Generator Blowdown Flow
Evaluator Note:	**The preferred source for these data points is ERCS, as indicated by the sequential listing in the procedure of potential sources for each data point.** **These data points can be obtained from ERCS by creating a "Current Value Chart" or by using Group Display "SP 1005B."**
Evaluator Cue:	**If asked, inform examinee that, "ERCS is the preferred data source."**
Performance:	**SATISFACTORY** _____ **UNSATISFACTORY** _____
Comments:	_____

Performance Step: **Critical X (S-2)**	Five (5) minutes after the initial data was recorded, using the same sources as identified above, record the SECOND SET of data in Table 1.
Standard:	Second set of data points are recorded in Table 1: • Steam Generator Pressure • Feedwater Temperature • Feedwater Flow • Steam Generator Blowdown Flow
Evaluator Cue:	**When examinee gets to this step, inform examinee that, "it has been 5 minutes since the first data points were recorded."**
Performance:	**SATISFACTORY** _____ **UNSATISFACTORY** _____
Comments:	_____

Performance Step: **Critical X (S-3)**	Complete the Average column.
Standard:	First and second sets of data points averaged and averages recorded in Table 1.
Performance:	**SATISFACTORY** _____ **UNSATISFACTORY** _____
Comments:	_____

Performance Step: **Critical X (S-4)**	Use Table 1 Average Data and calculate the % full power by completing Table 2.
Standard:	Table 1 Average Data used in Table 2 and correct % of full power calculated.
Evaluator Note:	**Since this JPM is performed with actual plant data at the time of administration, Table 1 and Table 2 must be collected from the examinee and reviewed for accuracy to determine satisfactory completion of this JPM.** **When the completed Table 1 and Table 2 have been collected, at the same ERCS terminal that the examinee obtained his/her data from, perform the following:** • **Type "CALM" and press <RETURN>.** • **Type "1" and press <RETURN>.** • **Note the value of "CORE THERMAL POWER (PERCENT)".** • **FAILURE OF THIS TASK OCCURS IF EXAMINEE'S CALCULATED CORE THERMAL POWER DOES NOT AGREE WITHIN ± 0.1% OF THIS VALUE.**
Evaluator Cue:	**When examinee has completed calculation of actual % of full power and satisfied that his/her number is correct, then inform examinee that, "Table 1 and Table 2 will be reviewed for accuracy and the calculated percent reactor thermal power recorded in SP 1005 with this SP attached."**
Performance:	**SATISFACTORY** _____ **UNSATISFACTORY** _____
Comments:	_____

Terminating Cues: **When the completed Table 1 and Table 2 (SP 1005B) have been collected from the examinee, inform examinee that, "this JPM is complete."**

Stop Time: _____

TURNOVER SHEET

INITIAL CONDITIONS:

- Unit 1 is operating at power.
- NIS inputs into the "CALM" program are OOS.
- SP 1005, "Unit 1 NIS Power Range Daily Calibration", is due.

INITIATING CUES:

- The SS directs you to perform SP 1005B, "Unit 1 Alternate Calculation Of Reactor Thermal Power", using an ERCS terminal in the TSC or EOF.

SP

ALTERNATE CALCULATION OF REACTOR THERMAL POWER

TABLE 1 - CALORIMETRIC INPUT DATA

PARAMETER	SOURCE	FIRST SET	SECOND SET	AVERAGE
TIME	N/A			N/A
LOOP A				
11 Steam Generator Pressure (psig)		698.1	698.2	698.15
11 Feedwater Temperature (°F)		432.4	432.4	432.4
11 Feedwater Flow √in H_2O		3.594	3.594	3.594
11 Steam Gen Blowdown Flow (gpm)		19.9	19.9	19.90
LOOP B				
12 Steam Generator Pressure (psig)		695.0	695.0	695.00
12 Feedwater Temperature (°F)		433.0	433.0	433.0
12 Feedwater Flow √in H_2O		3.568	3.566	3.567
12 Steam Gen Blowdown Flow (gpm)		41.1	41.0	41.05

TABLE 2 - HAND CALCULATION SHEET

A. STEAM GENERATOR ENTHALPY CHANGE

	LOOP A	LOOP B
1. Steam Pressure (psig)	698.15	695.00
+14.7	+14.7	+14.7
Steam Pressure (PSIA)	712.85	709.70
2. Corresponding Enthalpy (h_g) BTU/lb (Use Steam Tables)	1201.52	1201.59
3. Feedwater Temperature (°F)	432.4	432.0
4. Corresponding Enthalpy (h_f) BTU/lb (Use Steam Tables)	410.55	411.22
5. Enthalpy Difference (A2 - A4) BTU/lb	790.97	790.37

B. FEEDWATER FLOW

1. Flow ($\sqrt{in}$ H_2O)	NA	NA
2. F_a (from Figure 1)		
3. Flow Constant	0.03161	0.03174
4. B1 (X) B2 (X) B3 =		
5. Feedwater Specific Volume @ Temp A3, (Use Steam Tables)		
6. $\sqrt{V_f} = \sqrt{B5}$		
7. m(feedflow in 10^6 lb/hr) = (B4) ÷ (B6)	3.574	3.587

TABLE 2 - HAND CALCULATION SHEET [CONTINUED]

C. POWER

	LOOP A		LOOP B
1. A5 (X) B7 = Loop Thermal Power	2842.75		2819.25
2. Loop A (+) Loop B = Total Thermal Power		5662.0	
Minus 24 (RCP thermal input)		-24.0	
3. Total Thermal Power in 10^6 BTU\hr		5638.0	
(X) 0.2929		X 0.2929	
4. Total Thermal Power in Megawatts		1651.37	
(X) 0.06061		X0.06061	
5. % Full Power (uncorrected for steam generator blowdown)		100.09	

FP = Full Power corrected for SG blowdown

FPuc = Full Power uncorrected for blowdown

SGA = SG "A" Blowdown Flow in gpm 19.70

SGB = SG "B" Blowdown Flow in gpm 41.05

* 6. % Full Power (corrected for steam gen. blowdown)

$$FP = (FPuc) - \left[\frac{(SGA + SGB) - 20}{200}\right]$$

$$FP = (100.09) - \left[\frac{(60.75 +) - 20}{200}\right]$$

FP = 99.88 % Full Power

SELECT FUNC. KEY OR TURN-ON CODE

MAR 23, 2000
12:35:35

UNIT 2 NUCLEAR POWER RANGE CHANNEL
CALORIMETRIC CALCULATION SUMMARY
REAL TIME

PAGE 1 OF 3
CAL TIME 12:35
CAL DATE 03/23/00

TOTAL CORE THERMAL POWER	VALUE	QUALITY	ENG. U.
STEAM GENERATOR THERMAL POWER - LOOP A	2833.476	DALM	MBTU/HR
- LOOP B	2804.134	DALM	MBTU/HR
TOTAL	5637.609	DALM	MBTU/HR
TOTAL CORE THERMAL POWER (CTP)	1647.25	DALM	MWT
CORE THERMAL POWER (PERCENT)	99.83	DALM	% POWER
AVERAGE OF NIS READINGS	100.34	DALM	% POWER
CAL THERMAL - NIS POWER DEVIATION	-.51	DALM	% POWER

SUMMARY OF NIS INDICATIONS	VALUE	QUALITY	ENG. U.	CAL - NIS
NUCLEAR POWER RANGE CHANNEL N-41	100.29	DALM	% POWER	-.55
NUCLEAR POWER RANGE CHANNEL N-42	100.37	DALM	% POWER	-.63
NUCLEAR POWER RANGE CHANNEL N-43	100.42	DALM	% POWER	-.68
NUCLEAR POWER RANGE CHANNEL N-44	100.26	DALM	% POWER	-.51

USER SELECTED CALCULATION OPTIONS

FEEDWATER FLOW OPTION	LOOP A - 1 LOOP B - 1	FEEDWATER TEMPERATURE	LOOP A - 1 LOOP B - 1
STEAM GEN. PRESSURE	LOOP A - 1 LOOP B - 1	LOOP BLOWDOWN FLOW	LOOP A - 1 LOOP B - 1

NUCLEAR POWER OPTION - 1

F1= F2= KBD= NORMAL F3= F4= F5= MODE= FULL POWER F6= U2-A*

ENTER UPDATE RATE IN SEC (5-1800): [redacted]

MAR 23, 2000
12:38:13

GROUP DISPLAY

SP2005B ALT THERMAL POWER PAGE 1 OF 1

POINT ID	DESCRIPTION	CURRENT VALUE	ENGR UNIT	ALARM LIMIT	QUAL CODE
2U2015A	STEAM GENERATOR A AVERAGE PRESS	698.1	PSIG		DALM
2P0400A	LOOP A STM GEN PRESS 468 5	698.1	PSIG		GOOD
2P0401A	LOOP A STM GEN PRESS 469 5	698.1	PSIG		GOOD
2P0402A	LOOP A STM GEN PRESS 482 5	695.5	PSIG		GOOD
2U2016A	STEAM GENERATOR B AVERAGE PRESS	695.0	PSIG		DALM
2P0420A	LOOP B STM GEN PRESS 478 5	691.1	PSIG		GOOD
2P0421A	LOOP B STM GEN PRESS 479 5	695.9	PSIG		GOOD
2P0422A	LOOP B STM GEN PRESS 483 5	697.6	PSIG		GOOD
2T0418A	LOOP A STM GEN FW TEMP 5	432.4	DEGF		GOOD
2U2011A	STEAM GENERATOR A FEEDWATER TEMP	432.4	DEGF		DALM
2T0438A	LOOP B STM GEN FW TEMP 5	433.0	DEGF		GOOD
2U2012A	STEAM GENERATOR B FEEDWATER TEMP	433.0	DEGF		DALM
2U2028A	STEAM GENERATOR A FEEDWATER FLOW	3.594	MLB/HR		DALM
2U2009A	STEAM GENERATOR A AVG FW SQRT DP	15.5	SQRTDP		DALM
2F2511A	A FW 495 SQRT INCHES H2O 5	15.4960	SQRTIN		GOOD
2AFWAVSQ	2A FEED WATER 5 MIN AVG SQUARED	239.68	IN DP		DALM
2U2029A	STEAM GENERATOR B FEEDWATER FLOW	3.568	MLB/HR		DALM
2U2010A	STEAM GENERATOR B AVG FW SQRT DP	15.4	SQRTDP		DALM
2F2512A	B FW 497 SQRT INCHES H2O 5	15.3889	SQRTIN		GOOD
2BFWAVSQ	2B FEED WATER 5 MIN AVG SQUARED	237.39	IN DP		DALM
2U2017A	STEAM GENERATOR A BLOWDOWN FLOW	19.9	GPM		DALM
2U2018A	STEAM GENERATOR B BLOWDOWN FLOW	41.1	GPM		DALM

F1= F2= F3= F4= F5= F6=
KBD= NORMAL AMODE= FULL POWER U2-A*

SELECT FUNC. KEY OR TURN-ON CODE

MAR 23, 2000
12:43:16

GROUP DISPLAY

SP2005B ALT THERMAL POWER PAGE 1 OF 1
5 SECOND UPDATE RATE

POINT ID	DESCRIPTION	CURRENT VALUE	ENGR UNIT	ALARM LIMIT	QUAL CODE
2U2015A	STEAM GENERATOR A AVERAGE PRESS	698.2	PSIG		DALM
2P0400A	LOOP A STM GEN PRESS 468 5	697.8	PSIG		GOOD
2P0401A	LOOP A STM GEN PRESS 469 5	697.7	PSIG		GOOD
2P0402A	LOOP A STM GEN PRESS 482 5	695.0	PSIG		GOOD
2U2016A	STEAM GENERATOR B AVERAGE PRESS	695.0	PSIG		DALM
2P0420A	LOOP B STM GEN PRESS 478 5	691.1	PSIG		GOOD
2P0421A	LOOP B STM GEN PRESS 479 5	695.9	PSIG		GOOD
2P0422A	LOOP B STM GEN PRESS 483 5	697.6	PSIG		GOOD
2T0418A	LOOP A STM GEN FW TEMP 5	432.4	DEGF		GOOD
2U2011A	STEAM GENERATOR A FEEDWATER TEMP	432.4	DEGF		DALM
2T0438A	LOOP B STM GEN FW TEMP 5	433.0	DEGF		GOOD
2U2012A	STEAM GENERATOR B FEEDWATER TEMP	433.0	DEGF		DALM
2U2028A	STEAM GENERATOR A FEEDWATER FLOW	3.594	MLB/HR		DALM
2U2009A	STEAM GENERATOR A AVG FW SQRT DP	15.5	SQRTDP		DALM
2F2511A	A FW 495 SQRT INCHES H2O 5	15.4885	SQRTIN		GOOD
2AFWAVSQ	2A FEED WATER 5 MIN AVG SQUARED	239.82	IN DP		DALM
2U2029A	STEAM GENERATOR B FEEDWATER FLOW	3.566	MLB/HR		DALM
2U2010A	STEAM GENERATOR B AVG FW SQRT DP	15.4	SQRTDP		DALM
2F2512A	B FW 497 SQRT INCHES H2O 5	15.5018	SQRTIN		GOOD
2BFWAVSQ	2B FEED WATER 5 MIN AVG SQUARED	237.85	IN DP		DALM
2U2017A	STEAM GENERATOR A BLOWDOWN FLOW	19.9	GPM		DALM
2U2018A	STEAM GENERATOR B BLOWDOWN FLOW	41.0	GPM		DALM

F1= F2= F3= F4= F5= F6=
KBD= NORMAL AMODE= FULL POWER U2-A*

SELECT FUNC. KEY OR TURN-ON CODE

MAR 23, 2000
12:44:50

UNIT 2 NUCLEAR POWER RANGE CHANNEL
CALORIMETRIC CALCULATION SUMMARY
REAL TIME

PAGE 1 OF 3
CAL TIME 12:44
CAL DATE 03/23/00

TOTAL CORE THERMAL POWER	VALUE	QUALITY	ENG. U.
STEAM GENERATOR THERMAL POWER - LOOP A	2836.643	DALM	MBTU/HR
- LOOP B	2808.648	DALM	MBTU/HR
TOTAL	5645.292	DALM	MBTU/HR
TOTAL CORE THERMAL POWER (CTP)	1647.18	DALM	MWT
CORE THERMAL POWER (PERCENT)	99.83	DALM	% POWER
AVERAGE OF NIS READINGS	100.35	DALM	% POWER
CAL THERMAL - NIS POWER DEVIATION	-.51	DALM	% POWER

SUMMARY OF NIS INDICATIONS	VALUE	QUALITY	ENG. U.	CAL - NIS
NUCLEAR POWER RANGE CHANNEL N-41	100.32	DALM	% POWER	-.44
NUCLEAR POWER RANGE CHANNEL N-42	100.36	DALM	% POWER	-.48
NUCLEAR POWER RANGE CHANNEL N-43	100.44	DALM	% POWER	-.56
NUCLEAR POWER RANGE CHANNEL N-44		DALM	% POWER	

USER SELECTED CALCULATION OPTIONS

FEEDWATER FLOW OPTION LOOP A -
LOOP B -

FEEDWATER TEMPERATURE LOOP A -
LOOP B -

STEAM GEN. PRESSURE LOOP A -
LOOP B -

LOOP BLOWDOWN FLOW LOOP A -
LOOP B -

NUCLEAR POWER OPTION -

F1= F2= F3= F4= F5= F6=
KBD= NORMAL
AMODE= FULL POWER
U2-A*

COMMENTS ON PRAIRIE ISLAND OPERATING EXAM JOB PERFORMANCE MEASURES (JPMS)

JPM Specific Comments:

JPM Number	Comment(s)
B.1.a (00-SRO-S.1)	1. Is there a conduct of operations or a general procedure usage procedure that defines what "VERIFY" means? In this JPM it appears to really mean VERIFY/OPEN or VERIFY/CLOSE. **The licensee provided station reference (SWI 6-10) to term "verify." At PI, it means to verify the position/condition of a component and reposition to the required position/condition if necessary.** 2. The critical step associated with step 7.2.7 of SP 1047 allows the stuck rod to be inserted 12± 1 steps. The final position, from full out, could be 215, 216. or 217 and still be within procedural guidance. The task standard requires the rod to be inserted to 216. **The licensee agreed, modified JPM.** 3. Which bank is rod E-3 in; SB-A1 or SB-A2? **BS-A1.** 4. The task standard for the critical step associated with step 7.2.10 of SP 1047 should allow credit of attempting to move since the rod is stuck. Currently it states that rod motion is required for success. **The licensee agreed, JPM modified to accept an "attempt" to move the rod as a success path.** **5.** This is NOT an alternate path JPM. There is not transition to an alternate procedure or an alternate portion of SP 1047. As a result there is no success path. **Based on further discussion with the licensee and with IOLB (Munro), this JPM does constitute an alternate path JPM. The JPM requires the applicant to recognize the stuck rod AND recognize the need to consult the technical specifications for further guidance.**

COMMENTS ON PRAIRIE ISLAND OPERATING EXAM JOB PERFORMANCE MEASURES (JPMS)

JPM Number	Comment(s)
B.1.b (00-SRO-S.2) **UNSAT AS ORIGINALLY SUBMITTED**	1. Isn't pre-lubrication of the SI pump bearings considered "preconditioning?" **Lubrication of the bearings is not required for the pump to perform it's safety related functions under accident conditions.** 2. It is highly likely that the applicant will respond to the accumulator hi/lo pressure alarm prior to determining the SI pump run time. **The licensee agreed and modified the JPM.** 3. The applicable accumulator hi/lo pressure alarm response procedure was not provided to NRC. **Upon further review, the reference was provided.** 4. Once the applicant responds to the high pressure condition, he/she may still be outside the desired level band. is it expected that the JPM will continue until the level is restored? **The intent of the JPM is for the applicant to demonstrate the ability to raise level and respond to a high pressure condition. Once this is done, it is not necessary to continue until accumulator level and pressure are restored.** 5. An attentive operator will ensure pressure is low in the band prior to fill which could invalidate this JPM. **Although the licensee agreed that the applicant could take these actions, they believed these actions would then constitute an appropriate alternate path. The examiners disagreed with the licensee on this point. This was discussed with IOLB (Munro) who agreed that this did not constitute an appropriate alternate path JPM. The JPM was modified to drive the applicant to respond to a high pressure alarm.**
B.1.c (AF-3)	1. The cues provided for positioned equipment do not allow for the assessment of the operators ability to determine equipment position/condition. **Cues were reworded to ensure the applicant's could determined equipment position/condition.** 2. Change evaluator cue to acknowledge that AF-13-1 and 2AF-13-1 are OPEN verses CLOSED. **Cue was updated to respond that the valves were OPEN.**

COMMENTS ON PRAIRIE ISLAND OPERATING EXAM JOB PERFORMANCE MEASURES (JPMS)

JPM Number	Comment(s)
B.2.a (RC-8)	1. The safety function selected is a repeat of that used in item B.1.b above (see general comments). **The intended safety function was actually "2" as in the outline. This is consistent with the task being performed.** 2. The cues provided for positioned equipment do not allow for the assessment of the operators ability to determine equipment position/condition. **Cues were reworded to ensure the applicant's could determined equipment position/condition.** 3. The task standard for the critical step associated with step 18 of 1ECA-0.0 should include the applicable portions of 5AWI 3.10.0 such that the applicant's ability to manually manipulate the motor operated valve can be assessed. **The station procedural steps necessary to manually operate a MOV were added.**

COMMENTS ON PRAIRIE ISLAND OPERATING EXAM JOB PERFORMANCE MEASURES (JPMS)

JPM Number	Comment(s)
B.2.b (HC-1)	1. The cues provided for positioned equipment do not allow for the assessment of the operators ability to determine equipment position/condition. **Cues were reworded to ensure the applicant's could determined equipment position/condition.** 2. How would the operator obtain post-LOCA containment pressure and pre-LOCA temperature values? What is/are the stations expectations? **The station's expectation is that the applicant would obtain the information from the main control room. The cue was updated to allow the applicant the opportunity to demonstrate this.** 3. The task standard for the critical step associated with step 5.1.6 of C19.8 allows a band of C_P values ($1.2 \pm .05$) that is too large to evaluate the applicant's ability to select the proper pre-LOCA temperature curve (see also Figure 1 of C19.8). **The task standard acceptance criteria was updated to narrow the range of acceptable answers.** 4. The task standard for the critical step associated with step 5.1.7 of C19.8 utilized the wrong reference power setting. The reference power setting for hydrogen recombiner Unit 12 (42.50KW) was used verses the reference power setting for hydrogen recombiner Unit 11 (38.25KW). **The task standard acceptance criteria was corrected to reflect the use of the 11 hydrogen recombiner.** 5. The JPM does not evaluate the applicant's ability to ensure proper operation of the equipment. **So long as the applicant checks the thermocouples initially, they will demonstrate proper operation.**
A.1 (RC-20)	1. The initial conditions needed to satisfy step 6 of SP 1005B are not provided in the JPM initial conditions or initiating cue. **The IC will be entered into the procedure before hand.** 2. This JPM requires a lot of work for the examiner in that separate reactor thermal power calculations will have to performed to determine if applicant's answer was commensurate with the plant conditions at the time the JPM was performed. **The JPM was changed to utilize the simulator. This will provide consistency and eliminate the need for the examiners to manipulate plant equipment.**

COMMENTS ON PRAIRIE ISLAND OPERATING EXAM JOB PERFORMANCE MEASURES (JPMS)

JPM Number	Comment(s)
A.1 (00-SRO-A.1)	1. Why isn't this JPM performed on the simulator? Being in the main control room is a distraction to on-shift operators. **The JPM was modified to be performed in the simulator.** 2. The critical step associated with initiating a containment evacuation alarm has no place to log the time. **Doesn't need a place to log time, see comments below.** 3. The references provided do not discuss a requirement to initiate a containment evacuation alarm within one minute. **The JPM was modified and is no longer be "time critical."** 4. The JPM should specifically state when to start the "one minute" clock. The report of damaged fuel is provided to the applicant during the reading of the initial conditions. The applicant is then allowed to review the initial conditions and start the JPM once comfortable which could result in several minutes passing between damaged fuel report and initiation of the containment evacuation alarm. **The JPM was modified and is no longer be "time critical."** 5. The task standard for critical step associated with step 2.4.3.A of D5.2 AOP1 should provide indications of a successful initiation of safety injection. **Based on simulator observations during prep week, there are sufficient indications of successful initiation.** 6. The JPM should be allowed to progress to step 2.4 of D5.2 AOP1 to allow SRO to complete manual actions. **Not necessary to meet the intent of the JPM.**
A.2 (00-SRO-A.2) **UNSAT AS ORIGINALLY SUBMITTED**	1. The task standard only requires that the applicant identify one of three faults. This is a 33% success rate. It is difficult to assess the applicant's ability to perform a thorough review based on so few faults. The JPM should include a sufficient number of faults AND require that the applicant identify a minimum number of these faults such that it corresponds to a minimum 75% (i.e., identify three out of four faults). **The JPM was modified to include five faults, of which, the applicant must correctly identify four to pass. This required a significant modification.**

COMMENTS ON PRAIRIE ISLAND OPERATING EXAM JOB PERFORMANCE MEASURES (JPMS)

JPM Number	Comment(s)
A.3 (00-SRO-A.3)	1. Why isn't this JPM performed on the simulator? Being in the main control room is a distraction to on-shift operators. **The JPM was modified to be performed in the simulator.** 2. The task standard for the critical step associated with step 7.3.1 of F3-9 requires the applicant to ensure a plant announcement is made. Step 7.3.1 does not require this (this IS required in step 7.3.2 but is NOT one of the listed Emergency Director responsibilities). **Upon further review of the referenced documents, this is okay.** 3. JPM should allow the applicant to complete the steps of step 7.3.1. The JPM could also assess the applicant's actions relating to a missing person (step F) or reentry requirements (step G). Otherwise, it's an exercise in reading a basic survey map. **The steps of 7.3.1 do not provide opportunities for the applicant to demonstrate further knowledge/abilities. This is okay.** 4. This JPM is an awful lot like JPM A.1 (00-SRO-A.1) (i.e., basically making a couple plant announcements). **JPM A.1 also includes the need to recognize the failure of the automatic CI signal and the need to perform manual containment isolation valve manipulations. This is okay.** A
A.4 (ADMIN 4) **UNSAT AS ORIGINALLY SUBMITTED**	1. The initial conditions do not describe the condition of the effected Unit. **The JPM was modified to set up the simulator in a post-LOCA condition. The applicant would then have to evaluate the current plant conditions THEN determine the appropriate event declaration.** 2. The initiating cues should clearly state when the 15 minute clock starts. **The IC was modified to clearly state that this is a "time critical" JPM and when the "clock" starts.** 3. As written, the JPM places the candidate into the process five minutes after the event declaration. He/she will have to re-do actions previously completed to ensure the associated paperwork has been completed correctly. This is time consuming and does not reflect the applicant's ability to properly characterize an event but is simply a time critical review process. **The JPM has been modified such that this is no longer a concern.** 5/16 MDC

4/6/00 Discussion (612)330-6275, X4036, with Dennis Westphal, John Kempkes, Mike Bielby, Dave Pelton, George Wilson:

Big Picture:

NRC: Better to insert component and instrument failures before major events. May be masked during major event, or not considered high enough priority to address with limited crew. Also failures may be considered part of mitigating strategy, rather than individual failures.

NRC: Need a low power scenario.

NRC: Delete statement about resetting scenario and continuing if scram. Delete statement about ok to miss RCP trip criteria.

NRC: Scenarios C and D are low level of difficulty. Recovery path is too quick and non-challenging, one requires starting EDG to get power back, other requires bus lineup to restore ESF bus.

NRC: Letdown and charging events repeated in Scenarios A, C, and D, isolate letdown and charging and put excess letdown in service. If go to two scenarios, keep letdown leak with loss of letdown and restore excess letdown event.
RESPONSE: Licensee will change

NRC: Repeat failure of one train of SI in Scenario's B and C.

NRC: A pipe failure can be considered a component failure; however, the SGTL in Scenario B does not provide sufficient evaluation of SRO competencies.

NRC: Events are masked, CCW pump failure with SI in Scenario B, and diagnosis of the leak could be hidden when seal injection is increased in Scenario C.

Scenario A:

Controller for CV-31203 failure
the controller can be taken to manual and system restored thereby resulting in not enough actions for evaluation

The overall evaluation could be enhanced by giving the crew a success path (ie, allowing feed and condensate to be restored instead of going straight to feed and bleed). Currently, the SRO is being driven to F&B because of the large number of failures, no required to make a decision because there is no success path.

Scenario B:

Scenario is too similar to that of audit exam (SGTR with faulted SG), no significant changes were inserted, other than fault was in different place. Leave SGTL, but need to make a significant change.

No component failure, not enough to evaluate for SGTL actions. Most of analysis is performed from the field. As a result, a component failure needs to be added.

If crew manually initiates SI, then "CCW pump failure to start" is eliminated, and "Train A SI failure to start" is insignificant because other Unit RO would handle casualty and only 1 train of ECCS is required for the casualty.

Need to get into a contingency (ECA) or FR. ECA 3.1 must be entered to get credit for contingency procedure.

Scenario C:

Low level of difficulty for evaluation in EOPs. LOOP, recovery path is too quick and non-challenging, requires starting EDG to get power back

The fault dealing with charging and letdown is repeated (Scenario A and D). Charging line rupture, the event could be hidden when the leak is isolated and seal injection is increased.

SI train failure is repeated (Scenarios A). MT valve failure is repeated (Scenario A).

Scenario D:

Low level of difficulty for evaluation in EOPs.

Failure in letdown system repeated (Scenario A and C)

ECA 0.0 repeated (Scenario C).

4/12/00 Per discussion with Munro, only have to do one low power scenario, not one per set of scenarios. Will accept scenario as low power if at 50-60% power (actually, plant configuration and response is different around 10-15%).

4/17/00 Per discussion with Kempkes, revision discussed on Scenario A to allow crew to regain FW doesn't work well, takes too long. Based on timing of reactor trip, applicants trip early, or wait and allow DSS to trip determines SG levels. Bottom line, our best option appears to be going back to original scenario. I agreed.

COMMENTS ON PRAIRIE ISLAND WRITTEN EXAM

General Comments:

1. There were numerous examples of SRO importance factors being applied to "Both" level questions. Since "both" level questions are applicable to the RO, their importance factor should reflect the RO value. As a result, at ten questions (see individual question comments) actually carried an importance factor of less than 2.5. NUREG-1021, ES-401. Paragraph D.b. requires K/A topics to have an importance factor of greater than 2.5. Those questions with importance factors less than 2.5 require justification based on plant specific priorities. **This item was discussed with IOLB (Munro) who stated that for an SRO only exam, this was okay. However, IOLB cautioned that if the exam were also given to RO applicants, the K/A values would have been unacceptable. This was also discussed with the licensee who stated that they understood. This was discussed with the licensee.**

2. NUREG-1021, ES-401, Paragraph D.2.c., requires that between 50 and 60 percent of the [written] questions shall be written at the comprehension/analysis level. The exam was presented to the NRC with 54% of the questions listed as at the comprehension/analysis level. Based on the NRC initial review comments, that number dropped to 40%. **In some cases, the licensee upgraded the questions from memory level to comprehension/analysis level. In other cases, the licensee opted to bolster the percentage of comprehension/analysis level questions by modifying/replacing memory level questions that had previously been considered satisfactory by the NRC during the initial review. See the specific question comments starting on the next sheet.**

3. The written exam, as originally submitted by the licensee, did not meet the NRC's expectations for quality as discussed in NUREG-1021, ES-501, Paragraph E.3.a. After the NRC reviewed the written exam and discussed the comments with the licensee, 28 questions required significant modification or replacement. The comments made by the NRC fell into three main areas:

   a. Written exam questions were credited for being comprehension/analysis cognitive level questions when, in fact, they were memory level;
   b. Written exam questions contained multiple distractors that were not plausible; and
   c. Written exam questions contained multiple correct answers

COMMENTS ON PRAIRIE ISLAND WRITTEN EXAM

Question Specific Comments:

Question Number	Comment(s)
1.	**NRC:** The question is not SRO only IAW 10 CFR 55.41(b)(10). This should be a "B" level$_1$ question verses a "S" level question. The question does not assess the applicant's knowledge of a particular station procedure. It simply assesses the applicant's knowledge of the emergency boration flow path. Enhancement; as written, do not need the "given" information. **LICENSEE RESPONSE: The question was changed from a "S" level to a "B" level. Acknowledged enhancement comment.**
2.	**NRC:** The level of knowledge for this question is fundamental, GFE theory level. Having term "fuel temperature" in the stem immediately discounts distractors C and D. **LICENSEE RESPONSE: Changed stem to simply state "Doppler Coefficient." Also modified distractors C and D to be consistent with the format of distractors A and B.**
3.	**NRC:** this is not a SRO only IAW 10 CFR 55.41(b)(5). The question can be answered even if "given" information is deleted. The question does not assess the applicant's knowledge of technical specification limits, it only tests the applicant's ability to read a graph. **LICENSEE RESPONSE: The question requires the applicant to make an "operability call" then refer to the COLR. The question was changed to a "S" level question verses a "B" level.**
4. **UNSAT$_1$ AS ORIGINALLY SUBMITTED**	**NRC:** As written, answers A and B are also correct. The question is supposed to assess the applicant's knowledge of RCP tripping criteria. The way it is written, it is really asking for the effect(s) that a double-ended shear will have on continued operation. **LICENSEE RESPONSE: Distractors A, B, and C were replaced to ensure only one correct answer.**
5.	**NRC:** The question is not SRO IAW 10 CFR 55.41(b)(3). The question does not assess the applicant's knowledge of a particular station procedure. It simply assesses the applicant's knowledge of likely intersystem LOCA locations. **LICENSEE RESPONSE: The question was changed from a "S" level to a "B" level.**

COMMENTS ON PRAIRIE ISLAND WRITTEN EXAM

6.	**NRC:** Enhancement; too much information in each of the answers verses the stem. **LICENSEE RESPONSE: Acknowledged enhancement comment.**
7.	**NRC:** Enhancement; question would be more performance based if applicant provided with the scenario, including parameters, and asked for required action(s). **LICENSEE RESPONSE: Acknowledged enhancement comment.**
9.	**NRC:** Answer B may also be correct. C12.5 AOP1 states "Abnormal condition OR failure of normal boration" therefore in an ATWS condition, emergency boration may be applicable. **LICENSEE RESPONSE: Normal boration is assumed to be available unless otherwise stated. AOP1 clearly states to use "normal boration." Question was sat-as-is.**
10. **UNSAT$_2$ AS ORIGINALLY SUBMITTED**	**NRC:** No correct answer is provided. None of the conditions would result in the need to shutdown. The TS allows one of three CC pumps to be inoperable and one of two CC heat exchangers to be inoperable for up to 72 hours. The question, as written, only removes from service one CC pump and 1 CC heat exchanger. TSI 3.3-14 states that an alternative to entering the TS upon removing a CC pump from service is to cross-tied to the other Unit. **LICENSEE RESPONSE: Modified the stem to state that "for PRA reasons, unit CC pumps cannot be cross-connected." This ensured a correct answer existed.**
11. **UNSAT$_3$ AS ORIGINALLY SUBMITTED**	**NRC:** Answer B is also correct. The reference material does not state what precludes the use of N-41 through N-44 for monitoring during this casualty? **LICENSEE RESPONSE: N-41 thru 44 was also a correct answer. These NIs are not EQ instruments therefore they cannot be relied upon under adverse containment conditions. Modified the stem to place the containment in an adverse condition (i.e., introduce a LBLOCA) which precludes the use of N-41 thru N-44 from being a correct answer.**
18.	**NRC:** The question is not SRO only IAW 10 CFR 55.41(b)(13). **LICENSEE RESPONSE: Changed question to "B" level verses "S" level.**

COMMENTS ON PRAIRIE ISLAND WRITTEN EXAM

19.	**NRC:** Enhancement; capitalize "not" and spell out "CL" system. **LICENSEE RESPONSE: Acknowledged enhancement comment.**
20.	**NRC:** Enhancement; the question has an RO importance value of 2.3. **LICENSEE RESPONSE: Acknowledged enhancement comment.**
22. **$UNSAT_4$ AS ORIGINALLY SUBMITTED**	**NRC:** The question is not SRO only IAW 10 CFR 55.41(b)(13). The K/A doesn't apply and this question does not assess the applicant's ability to select an appropriate procedure. **LICENSEE RESPONSE: Significantly modified the stem to provide plant conditions and status tree conditions then asked for the procedure to which the applicant would transition. This resulted in the K/A matching the question as well as upgrading the question to an "S" level.**
23. **$UNSAT_5$ AS ORIGINALLY SUBMITTED**	**NRC:** Both answers C and D MUST be wrong, once the SGs are at atmospheric pressure, no steam will be dumping (i.e., the crew cannot stop dumping). **LICENSEE RESPONSE: Significantly modified the question to provide plant conditions and modified distractors C and D to be plausible.**
24. **$UNSAT_6$ AS ORIGINALLY SUBMITTED**	**NRC:** The level of knowledge for this question is fundamental and this is a memory level question. The question does not address the K/A in that it does not address high coolant activity. **LICENSEE RESPONSE: Modified the stem to upgrade the question from memory level to comprehension level. Also incorporated high coolant activity into the stem (i.e., matched the question to the applicable K/A).**
26.	**NRC:** This is not a "S" only question IAW 10 CFR 55.41(b)(10). The question doesn't assess the applicant's knowledge of a procedure or ability to assess at the SRO level. Can easily eliminate three distractors by knowing effects of rapid pressurizer pressure drop. The question is really asking "which of the following conditions can exist with a safety valve open?" **LICENSEE RESPONSE: Modified the stem to include additional given information so as not to make the answer so obvious. Also changed the question from a "S" level to a "B" level.**

COMMENTS ON PRAIRIE ISLAND WRITTEN EXAM

30.	**NRC:** The level of knowledge for this question is fundamental and this is a memory level question. The "given" information adds nothing to the question. **LICENSEE RESPONSE: Modified the stem and the distractors to make the question analysis level and to make the given information necessary to answer the question/make distractors plausible.**
33.	**NRC:** This is not a "S" only question IAW 10 CFR 55.41(b)(5). **LICENSEE RESPONSE: Changed the question from a "S" level to a "B" level.**
35.	**NRC:** Enhancement; the applicant will have to assume that the 21 pump is available. Loss of all HDT pumps will require other actions not provided in the answers. This should be given information. **LICENSEE RESPONSE: Acknowledged enhancement comment.**
37.	**NRC:** The level of knowledge for this question is fundamental and this is a memory level question. **LICENSEE RESPONSE: The question was changed to acknowledge a memory level.**
38.	**NRC:** Enhancement; capitalize "STOP" otherwise could lead applicant to consider all automatic actions resulting from reaching the alarm setpoint. **LICENSEE RESPONSE: Acknowledged enhancement comment.**
39. **UNSAT$_7$ AS ORIGINALLY SUBMITTED**	**NRC:** There is no correct answer provided. None of the answers identify how priorities are determined or relayed to the operators. **LICENSEE RESPONSE: Priority is determined based on knowledge of monitor responses and EPIP entry conditions. Modified the question such that there is a correct answer.**
41.	**NRC:** The level of knowledge for this question is fundamental and this is a memory level question. **LICENSEE RESPONSE: The question was changed to acknowledge a memory level.**

COMMENTS ON PRAIRIE ISLAND WRITTEN EXAM

45. **$UNSAT_8$ AS ORIGINALLY SUBMITTED**	**NRC:** Answer D will also be correct for some finite amount of time. **LICENSEE RESPONSE: Modified distractor D to make it incorrect.**
47. **$UNSAT_9$ AS ORIGINALLY SUBMITTED**	**NRC:** The level of knowledge for this question is fundamental. This is a memory level question. The exam does not have the NUREG-1021 minimum number of cognitive/analysis level questions. **LICENSEE RESPONSE: The question was changed to acknowledge a memory level. Another "memory level" question was modified to meet the NUREG-1021 minimum number of cognitive/analysis level questions.**
50. **$UNSAT_{10}$ AS ORIGINALLY SUBMITTED**	**NRC:** Answer D is also correct. Enhancement; spell out "ICCM." **LICENSEE RESPONSE: Modified answer D to be incorrect and acknowledged enhancement comment.**
53.	**NRC:** Enhancement; the question has an RO importance value of 2.2. **LICENSEE RESPONSE: Acknowledged enhancement comment.**
56.	**NRC:** The level of knowledge for this question is fundamental. **LICENSEE RESPONSE: Upgraded the correct answer such that a comprehensive level of knowledge is required in order to select it.**
57. **$UNSAT_{11}$ AS ORIGINALLY SUBMITTED**	**NRC:** Answer D is also a correct answer. Enhancement; delete "is limited" from the stem. **LICENSEE RESPONSE: Modified distractor D to be incorrect and acknowledged enhancement comment.**
59.	**NRC:** Enhancement; the question has an RO importance value of 2.3. **LICENSEE RESPONSE: Acknowledged enhancement comment.**

COMMENTS ON PRAIRIE ISLAND WRITTEN EXAM

60. **$UNSAT_{12}$ AS ORIGINALLY SUBMITTED**	**NRC:** The level of knowledge for this question is fundamental. This is a memory level question. The exam does not have the NUREG-1021 minimum number of cognitive/analysis level questions. **LICENSEE RESPONSE: The question was changed to acknowledge a memory level. Another "memory level" question was modified to meet the NUREG-1021 minimum number of cognitive/analysis level questions.**
61. **$UNSAT_{13}$ AS ORIGINALLY SUBMITTED**	**NRC:** The level of knowledge for this question is fundamental and this is a memory level question. The exam does not have the NUREG-1021 minimum number of cognitive/analysis level questions. Enhancement; the question has an RO importance value of 2.3. **LICENSEE RESPONSE: The question was changed to acknowledge a memory level and acknowledged enhancement comment. Another "memory level" question was modified to meet the NUREG-1021 minimum number of cognitive/analysis level questions.**
67.	**NRC:** Enhancement; the question has an RO importance value of 2.3. **LICENSEE RESPONSE: Acknowledged enhancement comment.**
68. **$UNSAT_{14}$ AS ORIGINALLY SUBMITTED**	**NRC:** Answers C and D are also possible methods to refill the SFPs. The correct answer is actually not an immediate step of the applicable AOP thus is not required to be memorized by applicant. **LICENSEE RESPONSE: The question was significantly modified.**
70. **$UNSAT_{15}$ AS ORIGINALLY SUBMITTED**	**NRC:** The level of knowledge is fundamental and the level of difficulty is a "1." This question does not assess knowledge of AOP, it can easily be correctly answered by just comparing the given information with the AOP titles. **LICENSEE RESPONSE: Significantly modified the question to bolster the level of knowledge and difficulty. Changed the level from "S" to "B" and from analysis to comprehension.**
73.	**NRC:** Enhancement; the question has an RO importance value of 2.4. **LICENSEE RESPONSE: Acknowledged enhancement comment.**

COMMENTS ON PRAIRIE ISLAND WRITTEN EXAM

74. **$UNSAT_{16}$ AS ORIGINALLY SUBMITTED**	**NRC:** The level of knowledge is fundamental. This is a memory level question. The exam does not have the NUREG-1021 minimum number of cognitive/analysis level questions. Enhancement; this question has an RO importance value of 2.2. **LICENSEE RESPONSE: Another "memory level" question was modified to meet the NUREG-1021 minimum number of cognitive/analysis level questions. The licensee acknowledged the enhancement comment.**
75. **$UNSAT_{17}$ AS ORIGINALLY SUBMITTED**	**NRC:** The level of knowledge for this question is fundamental. This is a memory level question. The exam does not have the NUREG-1021 minimum number of cognitive/analysis level questions. **LICENSEE RESPONSE: The question was modified to meet the NUREG-1021 minimum number of cognitive/analysis level questions.**
78. **$UNSAT_{18}$ AS ORIGINALLY SUBMITTED**	**NRC:** The level of knowledge for this question is fundamental. This is a memory level question. The exam does not have the NUREG-1021 minimum number of cognitive/analysis level questions. **LICENSEE RESPONSE: Another "memory level" question was modified to meet the NUREG-1021 minimum number of cognitive/analysis level questions.**
81. **$UNSAT_{19}$ AS ORIGINALLY SUBMITTED**	**NRC:** The level of difficulty is "1." This question does not assess knowledge of AOP, it can easily be correctly answered by just comparing the given information with the AOP titles. The distractors are not plausible. **LICENSEE RESPONSE: The question was replaced.**
83. **$UNSAT_{20}$ AS ORIGINALLY SUBMITTED**	**NRC:** The level of knowledge and level of difficulty below NUREG standards. Given that 123 A/C is in FIRST STANDBY mode, distractors B and D not plausible. Since the question also states that there is a hole in the system, the applicant will assume it needs to isolate and with no prior knowledge of the system design, choose A. **LICENSEE RESPONSE: Modified distractors B and D to make them plausible. Modified the stem given information to be consistent with the new distractors.**

COMMENTS ON PRAIRIE ISLAND WRITTEN EXAM

84. **$UNSAT_{21}$ AS ORIGINALLY SUBMITTED**	**NRC:** Distractors B, C, and D are not plausible and no knowledge of station procedures required to correctly answer the question. Enhancement; poor question format. **LICENSEE RESPONSE: Distractors B and D improved. Distractor C okay as-is. Acknowledged enhancement comment.**
85. **$UNSAT_{22}$ AS ORIGINALLY SUBMITTED**	**NRC:** The level of knowledge for this question is fundamental. This is a memory level question. The exam does not have the NUREG-1021 minimum number of cognitive/analysis level questions. **LICENSEE RESPONSE: The original answer was too obvious, a competent SRO would select it immediately. Answer C, the original correct answer, was modified to be a distractor. The new correct answer requires the applicant to demonstrate a comprehension level of knowledge of tech spec requirements.**
86. **$UNSAT_{23}$ AS ORIGINALLY SUBMITTED**	**NRC:** This is not a "S" only question IAW 10 CFR 55.41(b)(5). The level of knowledge for this question is fundamental. Answers C and D are technically the same answer. This is a memory level question. The exam does not have the NUREG-1021 minimum number of cognitive/analysis level questions. Enhancement; this question has an RO importance value of 2.1. **LICENSEE RESPONSE: Modified distractor C to be incorrect. The question was changed to reflect a level of "B," the question was changed to acknowledge a memory level and the licensee acknowledged the enhancement comment.**
87.	**NRC:** Enhancement comment; The question has an RO importance value of 2.3. **LICENSEE RESPONSE: Acknowledged enhancement comment.**
89. **$UNSAT_{24}$ AS ORIGINALLY SUBMITTED**	**NRC:** The level of knowledge for this question is fundamental. This is a memory level question. The exam does not have the NUREG-1021 minimum number of cognitive/analysis level questions. Also, unclear what "late date" means. **LICENSEE RESPONSE: Clarified definition of "late date." Another "memory level" question was modified to meet the NUREG-1021 minimum number of cognitive/analysis level questions.**

COMMENTS ON PRAIRIE ISLAND WRITTEN EXAM

90. **$UNSAT_{25}$ AS ORIGINALLY SUBMITTED**	**NRC:** Any knowledge of the definition of a work order in "status 90" discounts all distractors having the term "close the work order" in it (i.e., all of the distractors). Upon further review, the question is not consistent with station policy concerning how the situation in the stem would be handled. **LICENSEE RESPONSE: The question was significantly modified.**
93. **$UNSAT_{26}$ AS ORIGINALLY SUBMITTED**	**NRC:** The level of knowledge is fundamental. Distractor D is also a correct answer. Enhancement; this question has an RO importance value of 1.8. **LICENSEE RESPONSE: Distractor D was changed to make it incorrect. Acknowledged enhancement comment.**
94. **$UNSAT_{27}$ AS ORIGINALLY SUBMITTED**	**NRC:** The question, as written, does not preclude answers B, C, or D from being correct. **LICENSEE RESPONSE: Modified the stem to reference a RWP that will also be provided to the applicant during the exam. The RWP lists the TLD placement requirements and precludes the distractors from being correct.**
96.	**NRC:** This is not a "S" only question IAW 10 CFR 55.41(b)(5). Answer A could provide preliminary indications to an operator and entry into E-4. **LICENSEE RESPONSE: Upon further review, answer A IS incorrect. The question was changed to reflect a level of "B."**
98. **$UNSAT_{28}$ AS ORIGINALLY SUBMITTED**	**NRC:** Answers A and D are also correct. **LICENSEE RESPONSE: The question was significantly modified.**

FINAL AS-ADMINISTERED INITIAL EXAMINATION

FOR PRAIRIE ISLAND THE WEEK OF MAY 15, 2000

Northern States Power Company

1660 Wakonade Dr. E.
Welch, MN 55089
Telephone (651) 388-1165 x5031

May 8, 2000

Mr. Michael Bielby
Chief Examiner
US NRC Region III
801 Warrenville Road
Lisle, IL 60532-4351

Dear Mr. Bielby:

Enclosed are the remaining portions and forms for the May 2000 SRO Upgrade examination at Prairie Island. This material has been revised to meet comments during the examination review week and replaces forms and materials previously submitted.

In accordance with ES-201 Attachment 1, this material should be withheld from public disclosure until the examinations are complete.

John Kempkes

attachments: 0

encl: 1) Updated JPM set (10 JPM's plus references)
2) Replacement written outline Form ES-401-3 Tier 2/Gp 1
3) Form ES-301-1 Administrative Topics Outline
4) Form ES-301-2 CRS/Facility Walkthrough Outline
5) Form ES-301-3 Operating Test Quality Checklist
6) Form ES-301-4 Simulator Scenario Quality Checklist
7) Form ES-301-5 Transient and Event Checklist
8) Form ES-301-6 Competencies Checklist
9) Form ES-401-7 Written Examination Quality Checklist

Facility: Prairie Island Date of Exam: 5/15/00 Exam Level: S

Tier	Group	K/A Category Points											Point Total
		K 1	K 2	K 3	K 4	K 5	K 6	A 1	A 2	A 3	A 4	G *	
1. Emergency & Abnormal Plant Evolutions	1	2	6	6				4	3			3	24
	2	2	1	3				3	3			4	16
	3	0	1	2				0	0			0	3
	Tier Totals	4	8	11				7	6			7	43
2. Plant Systems	1	3	1	1	1	3	3	1	1	2	3	0	19
	2	1	1	2	3	2	1	1	2	1	1	2	17
	3	0	0	1	0	0	1	0	0	0	0	2	4
	Tier Totals	4	2	4	4	5	5	2	3	3	4	4	40

3. Generic Knowledge and Abilities	Cat 1	Cat 2	Cat 3	Cat 4	17
	4	3	5	5	

Note:
1. Ensure that at least two topics from every K/A category are sampled within each tier (i.e., the "Tier Totals" in each K/A category shall not be less than two).
2. Actual point totals must match those specified in the table.
3. Select topics from many systems; avoid selecting more than two or three K/A topics from a given system unless they relate to plant-specific priorities.
4. Systems/evolutions within each group are identified on the associated outline.
5. The shaded areas are not applicable to the category/tier.
6.* The generic K/As in Tiers 1 and 2 shall be selected from Section 2 of the K/A Catalog, but the topics must be relevant to the applicable evolution or system.
7. On the following pages, enter the K/A numbers, a brief description of each topic, the topics' importance ratings for the RO license level, and the point totals for each system and category. K/As below 2.5 should be justified on the basis of plant-specific priorities. Enter the tier totals for each category in the table above.

This exam contains the following types of questions, of which 34 are written at the SRO level.
63 New, 23 Significantly Modified, 14 Exam Bank
55 are at the Comprehension or Analysis level, 45 at the Memory level

Updated / Final Exam Outline MEB

ES-401 PWR SRO Examination OutlineForm ES-401-3
Emergency and Abnormal Plant Evolutions - Tier 1/Group 1

E/APE # / Name / Safety Function	K 1	K 2	K 3	A 1	A 2	G	K/A Topic(s)		Imp.	BMN/ MCA
000001 Continuous Rod Withdrawal / 1				X			A1.04	Operate/monitor emergency borate MOV	3.6/B	N/A
000003 Dropped Control Rod / 1	X						K1.17	Fuel temp. coeff. response on dropped control rod	3.1/B	N/A
000005 Inoperable/Stuck Control Rod / 1			X				K3.02	Rod insertion limits	4.2/S	M/A
000011 Large Break LOCA / 3		X					K2.02	Interrelations between LOCA and pumps	2.7/B	M/M
W/E04 LOCA Outside Containment / 3		X					K2.02	Interrelations between LOCA and heat removal systems	4.0/S	N/M
W/E01 & E02 Rediagnosis & SI Termination / 3			X				K3.04	Adhere to procedures during Rediagnosis	3.6/S	M/C
000015/17 RCP Malfunctions / 4		X					K2.08	Interrelations between RCP malfunctions and CCW	2.6/B	M/M
W/E09&**E10** Natural Circ. / 4		X					K2.01	Interrelations between Nat. Circ. and Safety Systems	3.5/S	B/M
000024 Emergency Boration / 1			X				K3.01	Reasons for when Emerg. Boration is required	4.4/S	N/C
000026 Loss of Component Cooling Water / 8						X	2.1.33	Recognize entry conditions for Tech. Specs.	4.0/S	N/C
000029 Anticipated Transient w/o Scram / 1					X		A2.01	Interpret nuclear instrumentation	4.7/S	N/M
000040 (**W/E12**) Steam Line Rupture - Excessive Heat Transfer / 4		X					K2.02	Interrelations between uncontrolled S/G depressurization and heat removal systems	3.9/S	M/C
W/E08 RCS Overcooling - PTS / 4		X					K2.02	Interrelations between PTS and heat removal systems	4.0/S	M/M
000051 Loss of Condenser Vacuum / 4			X				K3.01	Reasons for loss of steam dump capability upon loss of vacuum	3.1/B	N/M
000055 Station Blackout / 6						X	2.2.03	Knowledge of differences between units	3.3/S	N/C
000057 Loss of Vital AC Elec. Inst. Bus / 6				X	X		A1.05 A2.19	Backup instrument indications Plant automatic actions	3.4/B 4.3/B	N/M M/C
000059 Accidental Liquid RadWaste Rel. / 9			X				K3.01	Reasons for terminating release	3.9/S	N/C
000062 Loss of Nuclear Service Water / 4				X			A1.01	Temperature indications - monitor	3.1/S	N/M
000067 Plant Fire On-site / 9			X				K3.01	Reasons for installation of fire detectors	2.8/B	M/M
000068 Control Room Evac. / 8				X			A1.28	Pressurizer level and pressure control	4.0/B	N/M
000069 (**W/E14**) Loss of CTMT Integrity / 5	X						K1.03	Alarms, indications, and remedial actions for high ctmt pressure	3.6/S	N/M
000074 (W/E06&E07) Inad. Core Cooling / 4					X		A2.08	Effect of steam dump operation on RCS temperature and pressure	4.6/S	M/C
000076 High Reactor Coolant Activity / 9						X	2.3.08	Process for performing a planned gaseous radioactive release	3.2/S	N/C
K/A Category Totals:	2	6	6	4	3	3	Group Point Total:			24

ES-401 PWR SRO Examination OutlineForm ES-401-3
Emergency and Abnormal Plant Evolutions - Tier 1/Group 2

E/APE # / Name / Safety Function	K 1	K 2	K 3	A 1	A 2	G	K/A Topic(s)		Imp.	BMN/ MCA
000007 Reactor Trip - Stabilization - Recovery / 1				X			A1.02	Operate and monitor the MFW system upon a reactor trip	3.7/B	M/C
000008 Pressurizer Vapor Space Accident / 3			X				K3.03	Reasons for EOP actions	4.6/S	N/A
000009 Small Break LOCA / 3		X					K2.03	Interrelations between SBLOCA and S/Gs	3.3/S	N/A
W/E03 LOCA Cooldown - Depress. / 4					X		A2.01	Selection of appropriate procedures	4.2/S	M/C
W/E11 Loss of Emergency Coolant Recirc. / 4			X				K3.03	Reasons for manipulation of controls	3.8/S	N/M
000022 Loss of Reactor Coolant Makeup / 2								Not selected by lottery		
000025 Loss of RHR System / 4					X		A2.06	Determine existence of proper RHR overpressure protection	3.4/B	N/C
000027 Pressurizer Pressure Control System Malfunction / 3				X			A1.05	Transfer of heaters to backup power supply	3.2/B	N/M
000032 Loss of Source Range NI / 7						X	2.1.07	Evaluate plant performance	4.4/S	N/A
000033 Loss of Intermediate Range NI / 7								Not selected by lottery		
000037 Steam Generator Tube Leak / 3	X						K1.02	Leak rate vs. pressure drop	3.9/S	N/C
000038 Steam Generator Tube Rupture / 3					X		A2.14	Effect on rad release if steam dumps or atmos. reliefs are used	4.6/S	N/M
000054 Loss of Main Feedwater / 4						X	2.1.32	Explain and apply limits and precautions	3.8/B	N/C
W/E05 Inadequate Heat Transfer - Loss of Secondary Heat Sink / 4						X	2.4.06	Knowledge of EOP mitigation strategies	4.0/S	N/M
000058 Loss of DC Power / 6	X						K1.01	Battery charger equipment and operation	3.1/B	M/C
000060 Accidental Gaseous Radwaste Rel. / 9			X				K3.03	Actions in EOPs for accidental release	4.2/B	B/M
000061 ARM System Alarms / 7								Not selected by lottery		
W/E16 High Containment Radiation / 9						X	2.4.45	Interpret and prioritize alarms	3.6/S	M/C
000065 Loss of Instrument Air / 8				X			A1.05	Operate RPS for loss of instrument air	3.3/B	B/M
K/A Category Point Totals:	2	1	3	3	3	4	Group Point Total:			16

ES-401 PWR SRO Examination OutlineForm ES-401-3
Emergency and Abnormal Plant Evolutions - Tier 1/Group 3

E/APE # / Name / Safety Function	K 1	K 2	K 3	A 1	A 2	G	K/A Topic(s)		Imp.	BMN/ MCA
000028 Pressurizer Level Malfunction / 2			X				K3.02	Pressurizer pressure increase from reactor makeup/letdown imbalance	3.2/B	N/C
000036 Fuel Handling Accident / 8								Not selected by lottery		
000056 Loss of Off-site Power / 6			X				K3.01	Load sequencer operation	3.9/B	B/M
W/E13 Steam Generator Over-pressure / 4		X					K2.01	Operation of control and safety systems	3.1/B	N/A
W/E15 Containment Flooding / 5								Not selected by lottery		
K/A Category Point Totals:	0	1	2	0	0	0	Group Point Total:			3

ES-401PWR SRO Examination OutlineForm ES-401-3
Plant Systems - Tier 2/Group 1

System # / Name	K1	K2	K3	K4	K5	K6	A1	A2	A3	A4	G	K/A Topic(s)	Imp.	BMN/ MCA
001 Control Rod Drive					X							K5.69 Overlap between SR & IR	3.6/B	N/C
003 Reactor Coolant Pump						X			X			**A3.02 RCP Lube Oil & Bearing Lift** K6.04 Ctmt Isolation valve effect on RCP operation	**2.6/B** 3.1/B	**N/C** N/C
004 Chemical and Volume Control					X							K5.36 Temp. effect on solubility of boron	2.8/B	M/M
013 Engineered Safety Features Actuation						X						K6.01 Loss of ESFAS detectors	3.1/B	B/C
014 Rod Position Indication	X											K1.01 Cause/effect for RPIS & CRDS	3.6/B	N/M
015 Nuclear Instrumentation										X		A4.02 Manually operate NIS	3.9/B	M/A
017 In-core Temperature Monitor			X									K3.01 Nat. Circ. loss of indication	3.7/B	N/C
022 Containment Cooling								X				A2.04 Loss of cooling water	3.2/B	N/C
025 Ice Condenser												Not applicable to facility		
026 Containment Spray	X											K1.02 Cause/effect with cooling water	4.1/B	N/M
056 Condensate				X								K4.14 Design features to ensure MFW NPSH	2.6/B	M/M
059 Main Feedwater							X					A1.03 Power level restrictions for MFW	2.9/B	N/C
061 Auxiliary/Emergency Feedwater									X			A3.04 Automatic AFW isolation	4.2/B	N/M
063 DC Electrical Distribution	X											K1.02 Cause/effect of DC and AC systems	3.2/B	B/C
068 Liquid Radwaste					X					X		K5.03 Units of dose and dose rate A4.03 Stop release if limits exceeded	2.6/B 3.8/B	N/C M/M
071 Waste Gas Disposal						X						K6.10 Effect of malf. on decay tanks	2.5/B	N/M
072 Area Radiation Monitoring		X								X		K2.01 Power supplies to RMS A4.03 Operate source check	2.5/B 3.1/B	N/C N/M
K/A Category Point Totals:	3	1	1	1	3	3	1	1	2	3	0	Group Point Total:		19

ES-401 PWR SRO Examination OutlineForm ES-401-3
Plant Systems - Tier 2/Group 2

System # / Name	K 1	K 2	K 3	K 4	K 5	K 6	A 1	A 2	A 3	A 4	G	K/A Topic(s)	Imp.	BMN/ MCA
002 Reactor Coolant							X					A1.08 Predict change in Tavg	3.8/B	N/C
006 Emergency Core Cooling												Not selected by lottery		
010 Pressurizer Pressure Control					X							K5.02 Constant enthalpy expansion	3.0/B	N/C
011 Pressurizer Level Control		X										K2.01 Power supplies to charging pumps	3.2/B	N/M
012 Reactor Protection			X									K3.02 RPS malfunction effect on Main Turbine	3.3/B	N/M
016 Non-nuclear Instrumentation						X						K6.01 Effect of NNIS malfunction	2.5/B	N/C
027 Containment Iodine Removal												**Changed to 034 A2.02—no CIRS at PI**		
028 Hydrogen Recombiner and Purge Control	X											K1.01 Physical connection between HRPS and Containment annulus	2.5/B	N/M
029 Containment Purge												Not selected by lottery		
033 Spent Fuel Pool Cooling											X	2.4.04 Entry into EOPs or AOPs	4.3/S	N/A
034 Fuel Handling Equipment								X				**A2.02 Predict impact of dropped cask and use procedures**	**3.9/S**	N/M
035 Steam Generator			X									K3.03 S/G malfunction effect on secondary systems	3.1/S	N/M
039 Main and Reheat Steam				X								K4.05 Automatic steam line isolation	3.7/B	B/M
055 Condenser Air Removal				X								K4.02 Air ejector exhaust monitoring	2.6/B	N/C
062 AC Electrical Distribution								X				A2.02 Causes and significance of grounds	2.6/B	N/A
064 Emergency Diesel Generator											X	2.4.47 Diagnose trends using reference material	3.7/B	N/C
073 Process Radiation Monitoring					X							K5.03 Radiation intensity vs. exposure limits	3.4/B	N/M
075 Circulating Water				X								K4.01 Circ. Water heat sink	2.8/B	N/M
079 Station Air										X		A4.01 Operate/monitor cross-tie valves with IAS	2.7/B	N/C
086 Fire Protection												Not selected by lottery		
103 Containment									X			A3.01 Automatic containment isolation	4.2/B	B/M
K/A Category Point Totals:	1	1	2	3	2	1	1	2	1	1	2	Group Point Total:		17

ES-401 PWR SRO Examination OutlineForm ES-401-3
Plant Systems - Tier 2/Group 3

System # / Name	K 1	K 2	K 3	K 4	K 5	K 6	A 1	A 2	A 3	A4	G	K/A Topic(s)		Imp.	BMN/ MCA
005 Residual Heat Removal						X						K6.11	Loss of RHR flow control	2.7/B	B/C
007 Pressurizer Relief/Quench Tank													Not selected by lottery		
008 Component Cooling Water											X	2.4.11	Knowledge of abnormal event procedures	3.6/B	N/C
041 Steam Dump/Turbine Bypass Control													Not selected by lottery		
045 Main Turbine Generator													Not selected by lottery		
076 Service Water			X									K3.05	Effect of loss of cooling water on RHR components	3.2/B	N/A
078 Instrument Air											X	2.4.31	Knowledge of alarms and indications and response	3.4/B	B/C
K/A Category Point Totals:	0	0	1	0	0	1	0	0	0	0	2	Group Point Total:			4

Plant-Specific Priorities

System / Topic	Recommended Replacement for...	Reason	Points
Plant-Specific Priority Total: (limit 10)			

Facility: Prairie Island	Date of Exam: 5/15/00	Exam Level: S		
Category	K/A #	Topic	Imp.	BMN/ MCA
Conduct of Operations	2.1.1	Knowledge of conduct of ops. requirements	3.8/S	B/C
	2.1.4	Shift staffing requirements	3.4/S	M/C
	2.1.6	Supervise and manage during plant transients and upset conditions	4.3/S	N/C
	2.1.34	Maintain primary and secondary plant chemistry within limits	2.9/B	M/M
	Total			4
Equipment Control	2.2.2	Manipulate controls between shutdown and power levels	3.5/S	N/M
	2.2.12	Knowledge of surveillance procedures	3.4/S	N/C
	2.2.21	Knowledge of pre- and post-maintenance operability requirements	3.5/S	N/C
	Total			3
Radiation Control	2.3.1	Knowledge of 10CFR20 and facility radiation control requirements	3.0/B	M/C
	2.3.2	Knowledge of facility ALARA program	2.9/B	B/M
	2.3.3	Knowledge of SRO responsibilities for radioactive auxiliary systems outside the CR	2.9/S	N/C
	2.3.5	Use of personnel monitoring equipment	2.5/B	B/M
	2.3.10	Perform procedures to reduce excessive levels of radiation exposure	3.3/B	M/M
	Total			5
Emergency Procedures/ Plan	2.4.1	EOP entry conditions and immediate action steps	4.6/S	M/M
	2.4.4	Abnormal system operating parameters	4.3/B	M/C
	2.4.11	Knowledge of abnormal condition procedures	3.6/B	N/M
	2.4.13	Knowledge of EOP layout, symbols, and icons	3.7/B	B/M
	2.4.34	RO tasks performed outside the CR during emergency operations	3.6/B	M/M
	Total			5

Tier 3 Point Total (SRO)	17

FINAL AS-ADMINISTERED WRITTEN EXAMINATION

FOR THE PRAIRIE ISLAND INITIAL EXAMINATION THE WEEK OF MAY 15, 2000

U.S. Nuclear Regulatory Commission
Site-Specific
Written Examination

Applicant Information	
Name: MASTER EXAMINATION	Region: ~~I / II /~~ (III) ~~/ IV~~
Date: 5-15-2000	Facility/Unit: PRAIRIE ISLAND
License Level: ~~RO /~~ (SRO)	Reactor Type: (W) ~~/ CE / BW / GE~~
Start Time:	Finish Time:

Instructions

Use the answer sheets provided to document your answers. Staple this cover sheet on top of the answer sheets. The passing grade requires a final grade of at least 80.00 percent. Examination papers will be collected five hours after the examination starts.

Applicant Certification

All work done on this examination is my own. I have neither given nor received aid.

_____
Applicant's Signature

Results		
Examination Value	_____	Points
Applicant's Score	_____	Points
Applicant's Grade	_____	Percent

NAME :

ANSWER SHEET 2000 SRO					
QUESTION	ANSWER	QUESTION	ANSWER	QUESTION	ANSWER
1		31		61	
2		32		62	
3		33		63	
4		34		64	
5		35		65	
6		36		66	
7		37		67	
8		38		68	
9		39		69	
10		40		70	
11		41		71	
12		42		72	
13		43		73	
14		44		74	
15		45		75	
16		46		76	
17		47		77	
18		48		78	
19		49		79	
20		50		80	
21		51		81	
22		52		82	
23		53		83	
24		54		84	
25		55		85	
26		56		86	
27		57		87	
28		58		88	
29		59		89	
30		60		90	

ANSWER SHEET					
QUESTION	ANSWER	QUESTION	ANSWER	QUESTION	ANSWER
91		[illegible]		61	
92		32		62	
93		[illegible]3		63	
94		34		64	
95		35		65	
96		36		66	
97		37		67	
98		38		68	
99		39		69	
100		40		70	
[illegible]		41		71	
12		42		72	
[illegible]3		43		[illegible]3	
[illegible]		44		74	
15		45		75	
16		46		76	
17		47		77	
18		48		[illegible]8	
19		49		7[illegible]	
20		50		80	
21		51		81	
22		52		82	
23		53		83	
24		54		84	
25		55		85	
26		56		86	
27		57		87	
2[illegible]		58		88	
[illegible]		59		89	
30		[illegible]		90	

1
Given the following conditions on Unit 2:

- The plant was stable at 40% power and Tavg on program when a failure resulted in a continuous rod withdrawal.
- Control Bank D (CBD) started withdrawing at 72 steps/minute in Auto.
- The rod withdrawl was terminated after about 10 seconds by the operator.
- Normal boration is not available.
- Charging flow is 27 gpm to the regenerative HX.
- The Rod Control system engineer wants rod control left as is until he can record data.

The Reactor Operator is directed to use MV-32189, Emergency Boration to Charging Pump Suction, to restore Tavg to program. Which of the following describes the actions taken to establish 12 gpm boric acid flow per C12.5 AOP1, Emergency Boration of the Reactor Coolant System?

A. BATP speed to SLOW, start BATP, recirculation valve to 50%, open MV-32189.

B. BATP speed to SLOW, start BATP, recirculation valve to 100%, open MV-32189.

C. BATP speed to FAST, start BATP, recirculation valve to 50%, open MV-32189.

D. BATP speed to FAST, start BATP, recirculation valve to 100%, open MV-32189.

2
Given the following conditions on Unit 1:

- The plant is stable at 100% power with rod control in Manual.
- The core is nearing the end-of-cycle with boron concentration at 183 ppm.

ONE Shutdown Bank B (SBB) rod drops to the core bottom, and neither an automatic trip nor operator response action occur immediately. Which of the following describes the INITIAL effect on the Doppler Coefficient?

The Doppler Coefficient becomes...

A. More negative because fuel temperatures are lower.

B. Less negative because fuel temperatures are lower.

C. More negative because fuel temperatures are higher.

D. Less negative because fuel temperatures are higher.

3
Given the following conditions on Unit 1:

- During a load increase from 60% power, control rod C-7 IRPI (CBD) position did not change with bank demand.
- Annunciator 47013:0507, "COMPUTER ALARM ROD DEVIATION/SEQUENCING" was received.
- The reactor was stabilized at 78% power with rod control in Manual and Control Bank D (CBD) step counter at 184 steps.
- SP 1319 has determined that CBD rod C-7 is misaligned.
- 1C5 AOP5, "Misaligned Rod, Stuck Rod, And/Or RPI Failure or Drift," has determined rod C-7 to be stuck.

Refer to the attached pages from the Core Operating Limits Report.

The reactor will be operating within its operating limits if...

A. Reactor power is reduced to <54% and CBD rods remain at current height.

B. Reactor power is reduced to <72% and CBD rods are maintained at 218 steps.

C. Reactor power remains at 78% and CBD rods remain at current height.

D. Reactor power is raised to 100% and CBD rods are maintained at 218 steps.

4

For a Large-Break LOCA such as the double-ended shear of an RCS cold leg crossover pipe, which of the following may result from continued RCP operation after the RCP tripping criteria are met?

A. RCP overspeed resulting in flywheel failure.

B. Core uncovery is deeper and longer.

C. RCP flow could reduce effectiveness of ECCS injection.

D. Degradation/damage of the RCP #1 seals.

5
Which of the following systems is considered to be the most likely location for a rupture or break outside containment, and therefore is the only system verified to be isolated during ECA-1.2, "LOCA Outside Containment"?

A. Normal Letdown

B. RCP Seal Injection

C. RCP Seal Water return

D. Residual Heat Removal

6
Given the following conditions on Unit 1:

- The plant was stable at 100% power.
- A reactor trip and safety injection actuation have occurred.
- The crew has transitioned out of E-0.

Which of the following is a situation where a transition to ES-0.0, "Rediagnosis," would be implemented?

A. During ES-0.2, "SI Termination," SI pumps must be started due to a loss of subcooling.

B. During FR-P.1, "Response to Imminent Pressurized Thermal Shock Conditions," the Integrity safety function turns Yellow, but the end of FR-P.1 has NOT been reached.

C. During E-3, "Steam Generator Tube Rupture," the crew believes a small-break LOCA is occurring rather than a SG tube rupture.

D. During FR-C.1, "Response to Inadequate Core Cooling," the crew is directed to keep repeating a series of steps and appears to be making NO progress toward correcting the Core Cooling problem.

7

According to C14 AOP1, "Loss of Component Cooling," if component cooling flow is lost to an RCP, which of the following conditions requires the operator to immediately trip the reactor and the affected RCP?

A. Motor lower guide bearing temperature reaches 190°F.

B. Pump radial bearing temperature reaches 200°F.

C. Motor stator winding temperature reaches 220°F.

D. #1 seal outlet temperature reaches 190°F.

8

Which of the following is the reason that ES-0.4, "Natural Circulation Cooldown with Steam Void in Vessel," requires RVLIS full range indication to be maintained greater than 84% during the RCS cooldown?

A. To ensure adequate core cooling by keeping the fuel covered.

B. To prevent disrupting natural circulation flow due to voids entering the steam generator tubes.

C. To ensure the core exit thermocouples stay covered for accurate indication of RCS subcooling.

D. To prevent uncovering the pressurizer heaters, which would cause difficult pressure control.

9

Which of the following is a situation in which Emergency Boration is required to be used per C12.5 AOP1, "Emergency Boration of the RCS"?

A. ES-0.1, "Reactor Trip Recovery," has been implemented and two control rods are NOT fully inserted.

B. FR-S.1, "Response to Nuclear Power Generation/ATWS," has been implemented and immediate actions have been completed.

C. Boration of the RCS at 12 gpm is desired with maximum available charging pump flow of 15 gpm.

D. Boration of the RCS at 12 gpm is desired with the Boric Acid Flow counter isolated for replacement.

10
Given the following conditions:

- Unit 1 and 2 are stable at 100% power.
- 11 Component Cooling (CC) Pump was taken out of service one hour ago to replace a bad bearing.
- For PRA reasons, unit CC pumps CANNOT be cross-connected.

Which of the following inoperabilities, if it were to occur now, would require action to be initiated within one hour to place at least one Unit in Hot Shutdown within 6 hours?

A. 11 CC heat exchanger.

B. D1 Diesel Generator.

C. 121 Cooling Water Pump.

D. 12 CC heat exchanger.

11
Unit 1 personnel are responding to a Large Break LOCA.

-ERCS has failed.
-You are directed to implement Critical Safety Function status tree monitoring manually per F-0.

Which of the following results in meeting the requirements for a RED path priority on Subcriticality?

A. Startup rate on N35 or N36 exceeds +0.4 dpm.

B. Startup rate on N51 or N52 exceeds +0.4 dpm.

C. Reactor power on N41, N42, N43 or N44 exceeds 5%.

D. Reactor power on N51 or N52 exceeds 5%.

12
The following conditions exist on Unit 1:

- A reactor trip and Safety Injection have occurred from 100% power.
- ECA-2.1, "UNCONTROLLED DEPRESSURIZATION OF BOTH STEAM GENERATORS," is being performed.
- Both steam generator (SG) pressures are decreasing uncontrollably.
- Containment pressure indicates 6 psig, increasing.
- Feed flow to each SG has been throttled to 40 gpm.

Which of the following situations would require increasing the feed flow to each SG to more than 40 gpm?

A. The cooldown rate of the RCS cold legs is greater than 100°F/hr.

B. The narrow-range level in both SGs is greater than 10%.

C. The RCS hot leg temperatures are increasing.

D. To establish feed flow of 200 gpm until WR level in one SG is greater than Attachment E.

13
A steam line break accident and subsequent cooldown results in plant operation to the left of Limit A (in the "red" area) on F-0.4, "Integrity CSF." Which of the following describes the potential consequences to the reactor vessel?

A. Fatigue stresses from the rapid cooldown may limit vessel lifetime.

B. Failure of the vessel could occur, since the nil-ductility temperature increases with increasing pressure.

C. An existing flaw could grow and may lead to a loss of vessel integrity.

D. It may result in creation of a flaw in the beltline region of the vessel wall.

14
Unit 1 is at 12% when 1R transformer locks out. After the lockout, the following conditions exist:

- Both MSIVs are open.
- Condenser 1A vacuum is 18" Hg and decreasing.
- Condenser 1B vacuum is 14" Hg and decreasing.
- The condenser steam dump is open and controlling steam pressure at 1005 psig.

Which one of the following is the indicated status of the Steam Dump system?

A. The circulating water permissive has failed; the condenser steam dump will close when the condenser vacuum permissive is reached.

B. The circulating water permissive is operating properly; the condenser steam dump will close when the condenser vacuum permissive is reached.

C. Both the circulating water permissive and the condenser vacuum permissive have failed; manual action is necessary to close the condenser steam dump.

D. The condenser vacuum permissive has failed; manual action is necessary to close the condenser steam dump.

15

Which of the following is the reason that the overall safety margin of both units is reduced more for a loss of buses 25 and 26 on Unit 2 than for a loss of buses 15 and 16 on Unit 1?

A. Screenhouse safeguards power is only available from Unit 2.

B. Two instrument air compressors are powered from Unit 2.

C. 121 cooling water pump Bus 27 is supplied from the Unit 2 Safeguards buses.

D. Unit 1 Diesel Generators cannot adequately power all Unit 2 Safeguards loads.

16

With Unit 1 at 100% power and rod control in Auto, a loss of power from Instrument Bus 114 to Power Range NI (PRNI) channel N44 occurred. The Lead Operator takes a Power Mismatch switch to BYPASS PR N44 position.

What effect does this have on the NI control signal inputs?

A. Channel N44 input to the High Flux Rod Stop circuit is defeated.

B. Channel N44 input to the NI Power Auctioneering unit is defeated.

C. Channel N44 input to the Power Averaging circuit is defeated, the circuit counts the N42 input twice when averaging it with the N41 and N43 inputs.

D. Channel N44 input to the Power Averaging circuit is defeated, the circuit averages the N41, N42 and N43 inputs alone.

17
Given the following conditions on Unit 1:

- The reactor is at 8% power during a plant startup.
- All control systems are in the required conditions for this point in the startup.

If vital instrument bus 111 (White bus) is mistakenly shifted to the Alternate AC Power source, Panel 117, which of the following describes the resulting plant response and reason?

A. The reactor does NOT trip because power is still below P-10.

B. The reactor does NOT trip because power is above P-6.

C. A reactor trip occurs because PRNI channel N41 momentarily deenergizes.

D. A reactor trip occurs because IRNI channel N36 momentarily deenergizes.

18
Given the following conditions on Unit 1:

- The plant is operating at 100% power.
- A Liquid Waste Discharge Permit has been approved for 121 ADT Monitor Tank
- 121 ADT Monitor Tank is being discharged to the river.
- Halfway through the ADT Monitor Tank discharge it is noted that the SG Blowdown Monitor Tank (SGBMT) level is also decreasing steadily.
- No alarms have been received on Common Discharge Header radiation monitor R-18 or SG Blowdown Header radiation monitor 1R-19.

Which of the following states the action that should be taken, if any, and the reason?

The discharge should be:

A. Continued, because R-18 and 1R-19 have NOT alarmed.

B. Continued, because SGBMT level normally decreases with ADT Monitor Tank level and 1R-19 has NOT alarmed.

C. Stopped, because the SGBMT has NOT been sampled to authorize the release.

D. Stopped, because the level of radioactivity in the SGBMT is normally higher than in the ADT Monitor Tank.

19

During a long period of hot summer days, river and Cooling Water temperatures rise steadily. Which of the following Cooling Water inlet temperatures is the highest that would NOT result in declaring safety systems inoperable?

A. 79 degF.

B. 84 degF

C. 89 degF

D. 94 degF

20
Which of the following types of fire detectors responds to invisible combustion particles?

A. Thermal expansion detectors

B. Photoelectric detectors

C. Ionization detectors

D. Heat-activated pressure rise detectors

21
The control room is being evacuated due to a fire per F5 Appendix B.

Which of the following LOCAL actions "back up" the actions taken prior to leaving the control room by the operators?

A. Trip of 1R source to Bus 15

B. Starting 22 charging pump in LOCAL

C. Manually starting 12 Diesel Cooling Water Pump

D. Deenergization of PORV solenoids at the DC panel

22
Unit 2 was at 100% power when the following events occurred:

-Both steam generators faulted into containment.
-Upon transition from E-0 to E-2, "Faulted Steam Generator Isolation," a Red Path is noted on the Containment critical safety function (CSF), so the actions of FR-Z.1, "Response to High Containment Pressure" are performed.
-Aux Feedwater has been throttled to 40 gpm to each steam generator.
-When directed by FR-Z.1 to return to procedure and step in effect, the following status is noted on the CSF status trees:

Subcriticality: Green
Core Cooling: Green
Heat Sink: Red
Integrity: Orange
Containment: Red
Inventory: Yellow

Which one of the following procedures will contain the next steps to be performed?

A. E-2, "Faulted Steam Generator Isolation."

B. FR-Z.1, "Response to High Containment Pressure."

C. FR-H.1, "Response to Loss of Secondary Heat Sink."

D. FR-P.1, "Response to Imminent Pressurized Thermal Shock Conditions."

23

After a Unit 1 accident, the crew has implemented FR-C.1, "Response to Inadequate Core Cooling," with the following conditions:

- RCS pressure is 322 psig.
- SG pressures are 400 psig.
- CETC temperatures are 716°F and increasing.
- RCPs are stopped
- SI flow is NOT available.
- RVLIS full range level is 38% and decreasing.

Which of the following methods should be should be used FIRST to maintain core cooling?

A. Start one RCP to establish forced RCS flow.

B. Depressurize SGs to inject SI accumulators.

C. Open both PORVs to allow RHR injection.

D. Open RCS head vent valves to raise vessel level.

24
Given the following conditions:

- Unit 1 has been operating at 75% for several weeks with high reactor coolant activity due to a fuel rod cladding crack.
- Unit 2 is stable at 100% power.
- A gaseous radioactive waste release is being performed with river water temperature at 80°F.
- Wind is currently blowing from 270° at 12 mph.

Which of the following meteorological changes would require the Shift Supervisor to stop the waste gas release?

A. Wind starts blowing from 178° at 6 mph.

B. Wind starts blowing from 358° at 6 mph.

C. Wind starts blowing from 178° at 18 mph.

D. Wind starts blowing from 358° at 18 mph.

25
Given the following conditions on Unit 1:

- The plant was stable at 100% power.
- A malfunction of the 12 SG level control system caused overfeeding of 12 SG and a reactor trip due to Power Range NI high flux.
- After the trip, RCS Tavg decreased to 553°F and 12 SG level increased to 64% before 12 SG feed regulating valve (FRV) closed.
- After 12 SG FRV closed, 12 SG level and RCS loop Tavg both returned to the no-load program.
- The crew has implemented E-0 and ES-0.1, "Reactor Trip Recovery."
- All reactor trip signals are reset.

Which of the following actions would allow 12 SG FRV to open?

A. Open 12 SG FRV bypass valve.

B. Start 11 MFW pump.

C. Re-close the reactor trip breakers.

D. Depress the feedwater isolation reset pushbuttons for 12 SG.

26
Given the following conditions on Unit 2:

- The plant was stable with reactor power at 100%.
- A reactor trip and safety injection occurred due to a pressurizer PORV failing open and remaining full open.
- All safeguards equipment has responded per design.
- The crew has implemented E-0 and transitioned to E-1, "Loss of Reactor or Secondary Coolant."
- The failed open PORV has just been isolated.
- The crew is currently performing Step 12 of E-1, "Check if SI should be terminated."

Which one of the following combinations of SI Termination Criteria are expected to be satisfied at this point?

A. RCS subcooling AND secondary heat sink.

B. Pressurizer level AND RCS subcooling.

C. Pressurizer pressure AND secondary heat sink.

D. Pressurizer level AND secondary heat sink.

27
Refer to the attached Core Exit Thermocouple map taken during the Three Mile Island accident.

Which of the following explains the difference between the temperatures in the circled region and the temperatures in the central part of the core?

A. Low Head injection flow.

B. Natural circulation flow.

C. Core melt in the central regions.

D. Reflux cooling.

28
Given the following conditions on Unit 1:

- The plant was stable at 100% power.
- Reactor trip and safety injection have occurred due to a LOCA inside containment.
- All safeguards components actuated per design.
- The crew has transitioned to ES-1.1, "Post-LOCA Cooldown."
- 12 SI pump has been stopped; 11 SI pump and both RHR pumps are running.
- Containment pressure is 4 psig.
- Average of core exit T/C's is 325°F.
- RCS pressure is 180 psig.
- PRZR level is 23%.

The crew is performing step 12 of ES-1.1 (Procedure step attached). Which of the following should be the final action executed in Step 12?

A. Go to Step 17.

B. Go to Step 13.

C. Return to Step 9.

D. Stop last SI pump.

29
Given the following conditions on Unit 1:

- The plant was operating steady-state at 100% power.
- A plant trip and SI have occurred due to a LOCA outside containment.
- The shift crew has performed the applicable steps of E-0, E-1, and ECA-1.2, "LOCA Outside Containment."
- The LOCA has NOT been isolated, and ECA-1.1, "Loss of Emergency Coolant Recirculation," has been implemented

Which of the following states the reason ECA-1.1 directs establishing only one train of SI flow under these conditions?

A. To allow initiating blended makeup flow to the suction of the charging pumps.

B. To reduce the RCS cooldown rate to less than 100°F/hr when dumping steam at maximum rate.

C. To reduce the RWST level decrease rate and delay stopping all pumps pumping from the RWST.

D. To allow continuing attempts to open the Sump B to RHR isolation valves for the idle RHR pump.

30
Given the following conditions on Unit 2:

- A plant cooldown to cold shutdown is being conducted per 2C1.3, "Unit 2 Shutdown".
- RHR is in a shutdown cooling lineup.
- 21 RHR pump is in service; 22 RHR pump is not yet in service.
- RCS temperature is 330°F; RCS pressure is 350 psig.
- Pressurizer is filled to 100% cold cal.
- OPPS is enabled.

The following plant transient has just occurred:

- RHR discharge pressure is oscillating.
- PRT level is increasing.
- RHR flow has decreased to 0 gpm.

Which of the following events would be the cause of this transient?

A. 2PT-419 RHR suction pressure transmitter has failed high.

B. 21 RHR pump has tripped.

C. The RHR suction relief has lifted.

D. The RHR loop return valve has closed.

31

A loss of ONLY safeguards power on Unit 1 has resulted in a loss of power to some of the pressurizer heaters. Which of the following actions can be taken to restore an additional backup heater group for RCS pressure control?

A. Transfer Group A heaters from Bus 112 to Bus 180.

B. Transfer Group B heaters from Bus 122 to Bus 180.

C. Transfer Group A heaters from Bus 112 to Bus 270.

D. Transfer Group B heaters from Bus 122 to Bus 270.

32
Given the following conditions during a reactor startup on Unit 2:

- N35 reads 2 x 10^{-10} amps; N36 reads 3 x 10^{-10} amps.
- P-6 is actuated, but SR trips have NOT been blocked.
- The operator has just completed verifying proper SR/IR overlap.
- SR channel N31 has just failed low.

Which of the following describes current Technical Specifications compliance and the appropriate action?

The unit is in...

A. Violation of a Technical Specification LCO. Trip the reactor and implement E-0.

B. Violation of a Technical Specification LCO. Fully insert control rods to maintain the reactor subcritical.

C. A TS LCO action statement. Discontinue startup operations and return N31 to service prior to expiration of time limit.

D. Compliance with Technical Specifications. Block the SR trips and continue the reactor startup.

33

Unit 1 is shutting down from 100% power in response to a steam generator tube leak. What would be the expected trend of chemistry leak rate calculations during the shutdown and why? Assume the flaw size remains constant.

A. Leakage would increase because air ejector flow rate would decrease.

B. Leakage would remain the same because the isotopes analyzed are independent of power.

C. Leakage would decrease because primary to secondary pressure difference is reduced.

D. Leakage cannot be determined accurately when power is being changed due to iodine spiking.

34

The limits on RCS activity provided in Technical Specifications are based on the dose that would be received at the site boundary in a SGTR accident that begins with steady-state primary-to-secondary leakage of 1 gpm. Maintaining these RCS activity limits ensures that the 2-hour dose at the site boundary during a SGTR will NOT exceed:

A. 10CFR20 limits.

B. A small fraction of 10CFR100 limits.

C. EPA Protective Action Guideline thresholds.

D. 5 Rem TEDE.

35
The following conditions are present on Unit 2:

- Current reactor power is 80%; a load increase to 100% power is in progress per 2C1.4, "Unit 2 Power Operation."
- 23 Heater Drain Tank Pump (HDTP) is OOS.
- 21 HDTP is running in AUTO; 22 HDTP is running in MANUAL.
- 22 HDTP has a high bearing temperature and must be shut down.

What effect (if any) will the stopping of 22 HDTP have on the planned load increase?

A. NO effect, continue to 100% reactor power.

B. It will NOT be possible to reach 100% reactor power.

C. 3 condensate pumps may be required at 100% reactor power.

D. The load increase must be stopped until 2 HDTPs are available.

36
Given the following conditions on Unit 1:

- The plant was operating at 100% power.
- A plant trip occurred due to a loss of main feedwater
- AFW flow is lost and cannot be established.
- FR-H.1, "Response to Loss of Secondary Heat Sink," has been implemented.
- Both SG wide-range levels are at 6% and feed flow is NOT restored.

Which of the following actions is required per FR-H.1?

A. Open the pressurizer PORVs, and then initiate safety injection.

B. Initiate safety injection and then open the pressurizer PORVs.

C. Dump steam from both SGs at the maximum rate.

D. Depressurize one SG to allow condensate pumps to supply it.

37
The following conditions exist on Unit 1:

- Reactor power was stable at 100%.
- 12 battery charger has shutdown due to an internal synchronization failure.
- 12 battery voltage is 124 VDC.

Which of the following states the annunciator indications that would be seen initially as a result of this failure?

	12 DC SYSTEM TROUBLE	12 DC PANEL UNDERVOLTAGE
A.	Actuated	Actuated
B.	Actuated	Not Actuated
C.	Not Actuated	Actuated
D.	Not Actuated	Not Actuated

38
The following plant conditions exist:

- A release of 121 and 125 Waste Gas Decay Tanks is in progress.
- The radioactivity content of these tanks is 1000 times higher than expected due to errors in the sample analysis.
- 2R-30 has reached the alarm setpoint; the operators are verifying automatic actions per the ARP.

Which of the following actions will occur automatically to STOP the gaseous radwaste release?

A. 121 and 122 Sample Room exhaust fans stop.

B. Laundry, Locker and Filter Room ventilation exhaust fans stop.

C. Low Activity Gas Decay Tanks Plant Vent Valve (CV-31271) closes.

D. 122 Aux Building Special Ventilation starts.

39
Given the following conditions on Unit 2:

- The plant was stable with reactor power at 100%.
- A plant trip and safety injection occurred due to a large-break LOCA in containment.
- All safeguards equipment has responded as designed.
- The crew has transitioned to E-1, "Loss of Reactor or Secondary Coolant."

Which of the following radiation monitor alarms should receive the highest priority from the Emergency Director?

A. 2R-02, Containment Vessel Area Monitor.

B. 2R-07, Incore Seal Table Area Monitor.

C. 2R-11, Ctmt/Shield Bldg Vent Air Particle Monitor Lo Flow.

D. 2R-48, Containment High Range Monitor.

40
Given the following conditions on Unit 2:

- The plant was stable at 100%.
- INSTR AIR HEADER LO PRESS annunciator has alarmed.

If an instrument air header rupture results in a continuing loss of instrument air pressure, which of the following plant conditions would require a reactor trip according to C34 AOP1, "Loss of Instrument Air"?

A. Loss of normal letdown valve control.

B. Loss of normal charging valve control.

C. Loss of pressurizer spray valve control.

D. Loss of steam generator water level control.

41
Given the following conditions on Unit 1:

- Xenon oscillations are occurring and are becoming more severe.
- Reactor power is being varied between 95% and 98% under the direction of Nuclear Engineering.
- All control systems are in AUTO.
- The plant power changes are causing periodic imbalances between charging and letdown flow rates.

If the charging/letdown flow imbalance becomes severe, which of the following abnormal pressure/level conditions in the pressurizer will cause the pressurizer spray valves to be open while the pressurizer backup heaters are energized?

A. Low level with low pressure

B. Low level with high pressure

C. High level with low pressure

D. High level with high pressure

42
Given the following conditions on Unit 1:

- The plant was stable at 100% power.
- A loss of all offsite power and Safety Injection actuation have just occurred.

Which of the following is the LAST equipment to receive a "start permissive" from Bus 16 Load Sequencer during the load restoration?

A. Group B Backup Heaters

B. 122 Control Room Chiller and Pump

C. 12 AFW Pump and 122 Air Compressor

D. 12 CC pump and 12/14 Fan Cooler Units

43
Given the following plant conditions on Unit 1:

- A spurious reactor trip from 100% power occurred.
- 12 SG feedwater regulating valve failed full open during the trip and is mechanically stuck open.
- All other equipment has operated per design.

Which of the following will be most effective in preventing overpressurization of the affected steam generator?

A. Feedwater Isolation actuation.

B. SG PORV opens at set pressure.

C. SG safety valve(s) opens at set pressure.

D. Steam dumps relieve to main condenser.

44
The following conditions are noted during a reactor startup:

- N31 reads 5 x 10^{4} cps.
- N32 reads 5 x 10^{4} cps.
- N35 reads 2 x 10^{-11}amps.
- N36 reads 3 x 10^{-11}amps.
- P-6 is NOT actuated.

Which of the following has caused these conditions to exist?

A. One intermediate range channel is over-compensated.

B. One intermediate range channel is under-compensated

C. Both intermediate range channels are over-compensated.

D. Both intermediate range channels are under-compensated.

45
Unit 1 was at 100% power when an inadvertant Safety Injection occured.

Which of the following describes the effect (if any) on RCP #1 seal leakoff flow?

RCP seal leakoff flow is...

A. Directed to the VCT.

B. Directed to the PRT.

C. Directed to the RCDT.

D. Not affected.

46

In preparation for RCS cooldown, the RO is directed to borate to Cold Shutdown. The RO mistakenly uses the Cold Boron Addition Nomograph instead of the Hot Boron Addition Nomograph.

As a result of this error, the final boron concentration will _____ because of _____ differences in the conditions assumed for each nomograph.

A. not be adequate / coolant density

B. exceed the requirements / coolant density

C. not be adequate / boron solubility

D. exceed the requirements / boron solubility

47

The yellow containment pressure channel 1PI-950 failed high. The trip switch for bistable PC950B, Hi-Hi Containment Spray, was placed in the trip position. Which of the following describes the result of placing this switch to the trip position?

A. De-energizes the DC power satisfying the yellow channel logic matrix for both trains of the 'P' signal.

B. De-energizes the 1PI-950 input relays preventing the yellow channel from generating a spurious 'P' signal.

C. Energizes the 1PI-950 input relays generating an input to the 'P' actuation signal from the yellow channel.

D. Energizes the master bypass relay preventing the yellow channel from generating a spurious 'P' signal.

48

Unit 2 is at 50% power with a load increase in progress and CBD rods at 142 steps. The Reactor Operator mistakenly takes the "ROD CONTROL LOGIC-STEP COUNTER RESET" switch to RESET.

If the load increase is continued and rods are withdrawn without addressing the effects of the switch reset, which of the following problems will result?

A. The Rod Insertion Limit monitor will be inoperable.

B. The Bank Overlap Unit would attempt to withdraw Shutdown Bank A rods.

C. A Power Cabinet would generate an Urgent Failure alarm.

D. The Logic Cabinet would generate an Urgent Failure alarm.

49

The RO notes the following NIS parameters on the control board following an N42 rate trip channel alert:

	N41	N42	N43	N44
Percent Power	100	48	100	99
Delta I	0	+30	+1	+1

Based on the above information, which of the following N42 failures occurred?

A. Summing amplifier

B. Isolation amplifier

C. Upper detector

D. Lower detector

50
The following conditions exist on Unit 2:

- Inadequate Core Cooling Monitor (ICCM) Train A is OOS.

The following events then occur:

- Loss of offsite power with reactor trip
- Loss of power to 2EMB.
- Natural Circulation conditions are being verified in 2ES-0.1, Reactor Trip Recovery.

How will the operators determine Subcooling and Core Exit Thermocouple Temperatures under these conditions?

A. ERCS, displays for Subcooling and CETC's on Train A are unaffected by these plant conditions.

B. Subcooling from the Train A subcooling monitor, CETC temperatures by local readings on the junction boxes.

C. Subcooling by comparing highest hot leg temperature to RCS wide range pressure, CETC temperatures by Upper Head Thermocouple readings.

D. Subcooling by comparing highest hot leg temperature to RCS wide range pressure, CETC temperatures by local readings on the junction boxes.

51
Given the following conditions on Unit 1:

- The plant is operating at 100% power.
- 12 CFCU has developed a 30 gpm leak to atmosphere on the inlet pipe to one heat exchanger.
- The leakage was locally verified, so flow to and from the CFCU has been isolated from the control room.

Which of the following states the most important operational concern (prior to completing C35 AOP4, Cooling Water Leakage in Containment) associated with this failure?

A. A single failure could cause loss of containment integrity during an accident.

B. The leakage could have caused damage to components in containment.

C. 12 and 14 CFCUs will be inoperable for containment cooling during an accident.

D. 12 CFCU is inoperable for containment cooling during an accident.

52
Given the following conditions on Unit 1:

- Large break LOCA.
- 'P' signal generated.
- Both trains of containment spray actuated.
- Received and confirmed alarm "11 CONTAINMENT SPRAY PUMP CC WATER LO FLOW."

Which of the following describes the effect, if any, of continued operation of the 11 containment spray pump without component cooling water flow?

A. Overheating and subsequent cavitation.

B. Bearing failure and subsequent breaker trip.

C. Pump degradation and subsequent low discharge flow.

D. No effect on pump operation.

53
Given the following conditions on Unit 2:

- The plant is stable at 60% power.
- SGWLC is in AUTO with SG levels stable at 38%.
- 21 feedwater pump is running with oscillating discharge pressure.
- 22 feedwater pump is NOT in service.
- The bypass valves on both 24 and 25 feedwater heaters are open in preparation for removing the heaters from service.

Which one of the following actions will reduce the oscillations on 21 feedwater pump discharge pressure?

A. Open the feedwater pump subcooling valve.

B. Close the 24 feedwater heater bypass valve.

C. Open the feedwater pump recirculation valve.

D. Close the 25 feedwater heater bypass valve.

54
Given the following conditions on Unit 1:

- Main feedwater system in service with 12 MFP running.
- 11 Condensate pump running.
- S/G level control on bypass FW flow control valves in AUTO per 1C28.2, Unit 1 Feedwater System.
- Main turbine on the turning gear.
- AFW aligned for safeguard operation per 1C28.1, Auxiliary Feedwater System Unit 1.
- Reactor power = 6%.

A bearing temperature problem on 12 MFP requires that the MFPs be swapped. Which of the following describes the actions that would be performed to swap to 11 MFP?

A. Stop 12 MFP and then start 11 MFP.

B. Start a second condensate pump, start 11 MFP, and then stop 12 MFP.

C. Reduce power to <2%, shift to AFW, stop 12 MFP, and then start 11 MFP.

D. Increase steam dump flow to 12% power, start a second condensate pump, start 11 MFP, and then stop 12 MFP.

55
Which of the following automatically occurs as a result of an AFW pump autostart on 21 S/G Lo-Lo level?

A. Makeup is aligned to the condenser hotwell.

B. AFW Pump recirculation flow is aligned to the condensate storage tank.

C. Hydrazine injection pumps trip.

D. Steam generator blowdown flow realigns to 21 SGB heat exchanger.

56
Given the following conditions on Unit 1:

- The DC electrical system is aligned for normal at-power operations.
- The MCC supplying 11 battery charger is deenergized and can NOT be restored.

Which of the following states the effect of this event on the power supply for DC panel 11?

11 battery will supply DC panel 11...

A. Until power is restored to the MCC supplying 11 battery charger.

B. When the 11 battery charger DC output breaker automatically opens.

C. Until 11 battery charger static switch automatically selects an alternate AC source.

D. Until the portable charger is aligned as a replacement.

57

Technical Specification 6.5.D.6 limits the dose to general public from liquid effluent discharges to 0.12 mrem TEDE or .4 mrem TODE in a calendar quarter. In order to meet this limit, what restriction must be placed on liquid effluent discharges?

A. A total radioactive liquid discharge of 10 curies to the river during the calendar quarter.

B. Total activity of water in the discharge canal is limited to 2×10^{-4} uci/ml.

C. R-18 trip setpoint is calculated according to the mix of radionuclides in the discharge.

D. R-18 trip setpoint is always set at 10 mrem/hr.

58
Given the following conditions:

- A release of 121 ADT Monitor Tank is in progress.
- Annunciator 47022-0108, HI RADIATION TRAIN B PANEL ALARM, has actuated.
- R-18, Waste Disposal Liquid Effluent Monitor, is alarming.

Which of the following states the required initial action, if any, after verifying the R-18 reading is above the alarm setpoint?

A. NO action required, this is an expected alarm.

B. Direct the Duty Chemist to sample the effluent waste stream.

C. Verify the Waste Liquid Common Discharge Header valve automatically closed.

D. Verify the Waste Liquid Common Discharge Header keylock release valve automatically closed.

59
Given the following conditions:

- 121 Waste Gas Compressor (WGC) is running.
- 127 Gas Decay Tank (GDT) is selected.
- 121 CVCS HUT is being pumped down using #11 gas stripper feed pump.
- The pressure regulator from 127 GDT to the header has failed closed.
- Common vent header pressure is 1.8 psig and decreasing.

Which of the following will occur as common vent header pressure continually decreases?

A. Gas stripper feed pumps trip at 0 psig.

B. 121 WGC trips on low vent header pressure.

C. 128 GDT is vented to the vent header.

D. CVCS HUT could collapse as vacuum is drawn.

Both A & B correct

(Ref for B): Question did not state if running in AUTO or MANUAL.
Per Logic Diagram NF-40751-18, if in AUTO, compressor stop if waste gas header ≤ 1.5 psig's if in MANUAL the auto shutdown feature is disabled.

60

The Lead Operator is preparing to do a post-accident start of 12 RCP per 1C3 AOP1, "Post Accident Emergency Start of a Reactor Coolant Pump." Just prior to starting the RCP, the operator notes the following light indications:

Control Switch	Equipment	Green	Yellow	Red
CS-46258	12 RCP Oil Lift Pump	Off	Off	ON
CS-46256	12 RCP	ON	ON	Off

All bulbs have been checked OK.

When the Lead Operator takes CS-46256 to START, what will occur and why?

12 RCP will...

A. NOT start because sufficient oil lift pressure does NOT exist.

B. NOT start because sufficient #1 seal D/P does NOT exist.

C. NOT Start because the Large Motor Monitor interlock is not met.

D. Start.

61

Unit 1 tripped from 100% power with all systems functioning in automatic. 480 Volt Bus 121 source breaker tripped open.

Operation of which of the following AFW motor valves will be affected by the loss of Bus 121?

A. MV-32382, 12 MD AFWP TO 12 SG

B. MV-32016, 11 MAIN STM TO 11 TD AFWP

C. MV-32243, 11/12 FW TO 12 STM GEN ISOL

D. MV-32333, COND TO 11 TD AFWP SUCT

62

The operation selector switch for the containment area monitor, 1R-2, has been placed in the 'Check Source' position during a quarterly surveillance.

A "Rad Monitor Check Source Panel Alarm", 47022:0209, is received and a blue 'test' light comes on at the 1R-2 drawer.

What other actions or alarms are expected when the operation selector switch is taken to 'Check Source'?

A. An electronic check source signal is applied at the detector.

B. An electronic check source signal is applied at the radiation monitor panel and a Hi Rad Train B alarm is received.

C. A drive motor moves a check source in front of the detector.

D. A drive motor moves a check source in front of the detector and a Hi Rad Train B alarm is received.

63
Which of the following is the program Tavg for Unit 1 at 77% power?

A. 555°F

B. 556°F

C. 557°F

D. 559°F

64
Given the following conditions on Unit 1:

- Unit 1 is at 100% power.
- A pressurizer safety valve flow alarm has been received.
- PRT pressure is 20 psig.
- Containment pressure is 0 psig

Which of the following is the approximate tailpiece temperature expected?

A. 218°F

B. 230°F

C. 260°F

D. 650°F

65
Given the following conditions on Unit 1:

- Charging pump 12 is operating in Auto
- Charging pump 11 is operating in Manual at minimum speed
- Charging pump 13 is not running with the control switch in neutral.
- Bus #15 voltage has just been lost, Bus #16 remains energized.

Which of the following would result from this event?

A. Charging pump 12 continues operating; 11 and 13 are not available.

B. Charging pumps 11 and 12 continue operating; only 13 is not available.

C. Charging pump 11 continues operating, 12 is lost, and 13 is not available.

D. Charging pump 12 is lost, 11 continues operating, and 13 is still available.

66
Given the following conditions on Unit 1:

- The plant is stable at 100% power with normal control systems in Auto.
- Blue channel instrument bus 113 is deenergized for maintenance.
- All Blue channel bistables are tripped.
- The main turbine is in IMP IN.

The Lead Reactor Operator suddenly notes the following indication changes occurring:

- Control rods stepping in.
- Generator load decreasing.
- Reactor power decreasing.

Which one of the following events has occurred?

A. Loop B T-hot has failed to 620°F.

B. Loop B T-cold has failed to 525°F.

C. Turbine impulse pressure channel 1PT-485 has failed to 600 psig.

D. Loop A steam pressure channel 1PT-468 has failed to 1400 psig.

67

With the plant at normal operating conditions for 100% power, which of the following describes the effect of a bellows rupture occurring in PRZR level detector LT-426?

A. Indication on LI-426 fails low.

B. Indication on LI-426 fails high.

C. Indication on LI-426 fails as-is.

D. Level detector LT-426 will overheat.

68

An empty TN-40 spent fuel cask was being lowered into 121 Spent Fuel Pool (SFP) with the following initial conditions:

- The weir gates for 121 SFP are installed and level was lowered to 3 feet below the deck.
- Spent fuel pool cooling (suction and discharge) is isolated to 121 SFP and remains in service to 122 SFP.
- The level conversion ratio is 2600 gallons per foot of level in 121 SFP.
- Annunciator 47016:0101, 121 SPENT FUEL PIT LO LVL, is in alarm due to reducing level for cask transfer.

The following events have occurred:

- The lifting beam failed and the cask fell against the side of the pool, cracking the liner.
- The pool level has dropped to 4 feet below the deck in the past 10 minutes, and continues to decrease.

Which of the following states the actions that must be taken to maintain SFP level and cooling in accordance with C16 AOP1, "Loss of SFP Inventory?"

_____ the SFP Cooling Pumps and make up from the _____.

A. Stop; CVCS Holdup Tank

B. Stop; Boric Acid Blender

C. Run; CVCS Holdup Tank.

D. Run; Boric Acid Blender.

69

Gases or air vented through the post-LOCA vent system will be processed by which of the following systems?

A. Containment In-Service Purge

B. Auxiliary Building Special Ventilation

C. Shield Building Special Ventilation

D. Containment Vessel Air Handling

70
Given the following conditions on Unit 1:

- Refueling operations ongoing in Containment and the Spent Fuel Pool.
- Transfer tube gate valve is open.

Which one of the following alarms would require a direct transition to D5.2 AOP3, "DECREASING REFUELING WATER LEVEL DURING REFUELING"?

A. 47016:0602, 11 RHR PIT SUMP HI/LO LEVEL

B. 47016:0304, CONTAINMENT SUMP A HI LVL

C. 47016:0504, CONTAINMENT SUMP C HI LVL

D. 47016:0301, 121 SPENT FUEL PIT HI TEMP

71
Given the following conditions on Unit 1:

- One safety valve on 11 SG failed open with the plant at 100% power.
- The reactor was tripped and 11 SG isolated per E-2, "Faulted Steam Generator Isolation."
- The failed safety valve has been gagged shut and SI has been terminated.
- 11 SG level is 0% NR, 3% WR.
- TSC requests level to be restored in 11 SG.
- The Shift Supervisor has transitioned to FR-H.5, "Response to Steam Generator Low Level."

Which of the following describes the AFW flow rate used to restore level in 11 S/G?

A. Greater than 200 gpm until WR level is greater than 7%.

B. Less than 100 gpm until WR level is greater than 7%.

C. Greater than 200 gpm until NR level is greater than 10%.

D. Less than 100 gpm until NR level is greater than 10%.

72
Given the following conditions on Unit 1:

- Hot shutdown.
- Main steam line break in the Auxiliary Building upstream of the MSIV.

Which of the following signals would automatically close ONLY the MSIV on the affected steam line?

A. Hi-Hi steam flow and CI and Lo-Lo Tavg

B. Hi-Hi containment pressure

C. Containment isolation and SI

D. Hi steam flow and Lo-Lo Tavg and SI

73
Given the following conditions on Unit 1:

- Unit is in Hot Shutdown with secondary plant startup in progress.
- Normal air ejectors are in service.
- One hogger is operating to assist in drawing a vacuum in the main condenser.
- Ventilation systems lined up for NORMAL at-power operation.

Which of the following describes effluent monitoring of noncondensible gases removed from the condenser?

A. All noncondensible gases discharged from the condenser are monitored by 1R-15 and the Auxiliary Building vent stack monitors.

B. All noncondensible gases discharged from the condenser are monitored by 1R-15 and the Shield Building vent stack monitors.

C. Only the main air ejector discharge is monitored by 1R-15 and the Auxiliary Building vent stack monitors.

D. Only the main air ejector discharge is monitored by 1R-15 and the Shield Building vent stack monitors.

74

Which of the following will actuate protection for the main generator if a ground fault develops on phase B of the stator winding?

A. Unbalanced phase currents.

B. Excessive phase angle.

C. Excessive current phase to ground.

D. Excessive phase current.

75
Given the following conditions on Unit 1:

- D1 is the only source of power to the unit following a design basis accident.
- The Turbine Building Operator is concerned with several trends in his logs:

Time	Lube Oil Press	Lube Oil Temp	Crankcase Vac	Day Tank Level
1000	19 psig	183 degF	5.2 in H20	60%
1100	18 psig	186 degF	4.2 in H20	50%
1200	17 psig	189 degF	3.2 in H20	40%

If NO operator action is taken, which of these trends, if continued, would FIRST result in an interruption of electrical power from D1?

A. Lube Oil Pressure.

B. Lube Oil Temperature.

C. Crankcase Vacuum.

D. Day Tank Level.

76
Given the following conditions on Unit 1:

- Fuel failure has been verified.
- Unit 1 is shutting down in compliance with Technical Specifications.

To reestablishing letdown flow, C12.1, "CVCS Letdown, Charging and Seal Water Injection," directs the operator to isolate the letdown line if RCS activity is greater than 1×10^4 uci/cc. Which of the following describes the expected indications of the radiation monitors for this activity level?

A. Charging pump rad monitor R-4 is 5 R/hr and increasing
Letdown monitor R-9 is 1 R/hr and increasing

B. Charging pump rad monitor R-4 is 1 R/hr and increasing
Letdown monitor R-9 is 5 R/hr and increasing

C. Charging pump rad monitor R-4 is 5 R/hr and increasing
Letdown monitor R-9 is 5 R/hr and increasing

D. Charging pump rad monitor R-4 is 10 R/hr
Letdown monitor R-9 is 10 R/hr

77

Which of the following ensures that the ultimate heat sink for reactor safety is maintained on a long-term basis after a design-basis earthquake?

A. Plant screenhouse.

B. Intake screenhouse.

C. Emergency intake bay and piping.

D. 121 Cooling Water Pump.

78 121 Air Compressor is being taken OOS.
In order to align Station Air to supply Instrument Air upstream of the air dryers, the operator must...

A. Open crossconnect valves SA-12-19 and SA-12-18 and verify dryer bypass valve MV-32363 in automatic.

B. Open manual cross connect valve CP-40-7 and verify one station air compressor in manual, the other in standby.

C. Open MV-32318, Service Air Header Isolation Valve, and verify station air pressure greater than instrument air pressure.

D. Open MV-32321, Header Cross Connect, and verify Instrument Air pressure greater than 85 psig.

79
Given the following conditions on Unit 1:

- Cold shutdown during an outage.
- Containment in-service purge is in operation.
- Spent Fuel Pool Ventilation monitor R-25 high alarm has actuated.

Which of the following describes the automatic response of the containment in-service purge system?

A. Discharge aligns to containment.

B. Discharge aligns to Aux Building special ventilation.

C. Supply to and exhaust from containment isolates.

D. Supply from spent fuel pool ventilation isolates.

80
Given the following plant conditions:

- Reactor coolant system temperature is 320°F.
- Reactor coolant system pressure is 370 psig.
- RHR cooldown is in operation with 11 and 12 RHR pumps running, 11 and 12 RHR heat exchangers in service.
- A cooldown rate of 80°F/hour has been established.

Which of the following failures will result in the greatest cooldown rate?

A. Loss of control air to 11 RHR HX OUTLET flow control valve CV-31235.

B. Loss of power to 11 RHR HX CC inlet valve MV-32093.

C. The bellows in RHR flow detector FT-626 fails by rupturing.

D. Loss of control air to the RHR HX bypass flow control valve CV-31237.

81

A Component Cooling (CC) leak has resulted in CC flow to the Seal Water heat exchanger (HX) being isolated. Which of the following actions is directed by C14 AOP1 to assist in maintaining VCT temperature within limits?

A. Remove a second letdown orifice from service.

B. Place a second letdown orifice in service.

C. Raise the letdown HX temperature controller setpoint.

D. Remove normal letdown from service and place excess letdown in service.

82
Given the following conditions on Unit 1:

- The plant was at 100% power with 121 CL pump OOS.
- A safety injection due to a LOCA with coincident loss of offsite power occurred.
- 22 Diesel Cooling Water pump failed to start.
- All other safety equipment operated per design.

Unit 2: Reactor trip, loss offsite power, no accident.

For present plant conditions, which of the following describes the optimum RHR alignment to provide for continued long-term decay heat removal?

A. 11 RHR pump to 11 RHR heat exchanger.

B. 11 and 12 RHR pumps to 11 RHR heat exchanger.

C. 11 RHR pump to 11 and 12 RHR heat exchangers.

D. 11 and 12 RHR pumps to 11 and 12 RHR heat exchangers.

83
Given the following plant conditions:

- Unit 1 operating at 100% reactor power.
- 121 and 122 air compressors are running in PREFERRED mode.
- 123 air compressor is in FIRST STANDBY mode.
- 124 air compressor is running in PREFERRED mode.
- 125 air compressor is in STANDBY mode.

A Unit 1 instrument air header break causes instrument air header pressure to continuously decrease and 123 air compressor fails to autostart. Which of the following will automatically occur next if NO operator action is taken?

A. 125 air compressor starts.

B. Unit 1 instrument air header isolation valve (MV-32314) closes.

C. Unit 2 instrument air header isolation valve (MV-32315) closes.

D. Station air receiver to instrument air supply header valves open.

84

The following occurs on a weekend with only duty shift personnel available.
Sufficient operations personnel were there in required numbers, but engineering and management were not on site.
Which situation below would:

-Require a Temporary Change Notice but NOT require a Procedure Change Submittal, AND
-Require no reviews or approvals by other than the two SROs?

A. A manual valve must be substituted for an inoperable MOV to accomplish the intent of a procedural step.

B. An MOV is to be tested for stroke time per a post-maintenance work order and the operator wants to add steps to lubricate the valve stem.

C. Numbered steps of 1C1.2, Unit 1 Startup, are required to be performed out of sequence.

D. An error is found in an EOP that is being performed.

85

Midway through a midnight shift, the Shift Manager is rushed to the hospital due to an apparent seizure. Which of the following conditions meets Technical Specification requirements?

Technical Specifications are met if:

A. Unit 1 is in Refueling and Unit 2 is in Power Operation.

B. Unit 1 and Unit 2 are in Cold Shutdown.

C. Another SM is called and takes the duty within 4 hours.

D. The Unit 1 SS is qualified as Shift Manager.

86

The reactor has just tripped from 100% power after 210 days of continuous operation. Which of the following describes the crew responsibilities for implementing the required emergency actions?

The Shift Supervisor shall obtain E-0, and the Control Room operators must...

A. WAIT to implement immediate actions until the Shift Supervisor has the procedure ready to start on step 1.

B. Implement immediate actions from memory until the Shift Supervisor starts reading the next step to them.

C. Implement immediate actions from memory and report completion, and only then the Shift Supervisor may start reading at step 1.

D. Implement immediate actions from memory until the Shift Supervisor has the procedure ready to start reading at step 1.

87

Which of the following statements describes a CVCS chemical process used to maintain reactor coolant system chemistry within specifications?

A. Saturated mixed bed demineralizers are used to remove excess lithium (Li) ions from the reactor coolant system.

B. Cation demineralizers are used to reduce the concentration of cesium (Cs) that may result from fuel defects.

C. Hydrazine (N_2H_2) is added to the reactor coolant system while at power to scavenge dissolved oxygen (O_2) to reduce corrosion of system components.

D. Hydrogen Peroxide (H_2O_2) is added to the reactor coolant system while shut down and cooled down to reduce the hydrogen (H_2) concentration prior to depressurizing.

88
Which of the following describes licensed operator responsibilities for proper control of core reactivity?

A. Shift management is responsible to supervise only planned reactor power load changes of greater than 15%.

B. An SRO and RO with no other concurrent duties shall be designated to perform a reactor startup.

C. The RO must communicate all routine reactivity changes to the Unit Shift Supervisor.

D. In emergency situations, reactivity changes may be initiated only with the approval of the Unit Shift Supervisor.

89

A review of the Technical Specifications Essential Equipment Database has determined that a Hi-Hi Steam Generator Level Feedwater Isolation Semiannual surveillance procedure time interval was exceeded. Which of the following describes the actions that should be taken by Technical Specifications? The system is to be declared inoperable:

A. As of the late date and immediate action must be taken to comply with the applicable Specification.

B. As of the late date, but action to comply with the applicable Specification may be delayed up to 24 hours to permit completion of the surveillance.

C. At the time of discovery and immediate action must be taken to comply with the applicable Specification.

D. At the time of discovery, but action taken to comply with the applicable Specification may be delayed for up to 24 hours to permit completion of the surveillance.

90

During an outage, work is completed on a Safety Injection pump. During the Surveillance Procedure section specified for post-maintenance testing, pump discharge pressure falls outside of the acceptance requirements. The engineer reports that in its current condition the SI pump would be unable to meet its safety function.

Which of the following describes ALL the required actions?

A. Ensure a nonconformance report and a new work order are generated.

B. Issue a TCN to add steps to the work order to rework and retest the pump.

C. Ensure a nonconformance report is generated and close the work order.

D. Close the work order and initiate a new work order.

91

A male employee who is 20 years old has received the following exposure:

- Current Total Effective Dose Equivalent (TEDE) for the year to date is 4200 mrem.
- Current Deep Dose Equivalent (DDE) for the year to date is 700 mrem.
- Current Committed Effective Dose Equivalent (CEDE) for the year to date is 3500 mrem.
- Current Total Organ Dose Equivalent (TODE) for the year to date is 300 mrem.

Assuming his exposure is properly documented and appropriate management approval is received, which of the following is the MAXIMUM additional whole body exposure the operator can receive this year without exceeding his 10CFR20 exposure limits?

A. 500 mrem

B. 800 mrem

C. 1200 mrem

D. 1500 mrem

92

One of the ALARA program's objectives is to keep the annual integrated dose for all station workers as low as reasonably achievable. Which of the following is a method used to minimize integrated dose at Prairie Island?

A. Dissolved hydrogen is maintained in the reactor coolant system during power operation.

B. Portable shielding is always used in all work near hot spots.

C. CVCS letdown flow rate is minimized during plant outages.

D. Power changes are performed at the maximum rate allowed by procedure.

93
Given the following plant conditions:

- Unit 1 Steam Generator Blowdown flow is being discharged to the river.
- Radiation Monitor 1R-19 has just lost power.

Which of the following actions should be taken?

A. Terminate discharge flow or obtain periodic effluent grab samples.

B. Reset blowdown in the Auxiliary Building and reopen the blowdown control valves.

C. IF R-18 discharge line monitor is operable, discharge may be resumed.

D. Terminate discharge flow because discharge is NEVER allowed with 1R-19 out of service.

94

You have been assigned to work in an area under the attached RWP 102. Which of the following describes how the TLD and the electronic dosimeter should be worn?

A. Both on a lanyard in the chest area.

B. TLD on a lanyard in the chest area and the electronic dosimeter on the front of your belt.

C. Electronic dosimeter on a lanyard in the chest area and the TLD on the front of your belt.

D. Both on the front of your belt.

95
Which of the following describes the benefit of administering Potassium Iodide (KI) tablets to personnel in emergency situations?

A. Saturates the thyroid with iodine to prevent accumulation of radioactive iodine.

B. Inhibits absorption of radioactive iodine by lining the gastrointestinal tract with a protective coating.

C. Saturates the bloodstream with iodine to reduce the ingestion of airborne radioiodine.

D. Combines with radioactive iodine to form molecules that are easily removed with body waste.

96
Given the following plant conditions:

-Unit 2 is in reduced inventory.
-21 RHR pump and heat exchanger are in service.

Which of the following would meet entry conditions for E-4, "Core Cooling Following Loss of RHR Flow"?

A. Indications of air ingestion into the RHR pump are noted on ERCS.

B. Instrument Air pressure is lost and will not be restored for 20 minutes.

C. Safeguards Bus 25 locks out and the lockout appears to be valid.

D. 21 RHR pump locks out and 22 RHR pump breaker fails to close.

97
Given the following plant conditions:

- Unit 1 at 100% power.
- Annunciator 47015-0206, 11 RCP LAB SEAL LO D/P, is alarming.
- Annunciator 47015-0306, 11 RCP SEAL LEAKOFF HI FLOW, is alarming.
- 11 RCP Seal Leakoff Flow rate is stable at 7.5 gpm.
- 11 RCP radial bearing temperature is stable at 182°F.
- #2 seal leakoff flow is approximately 0.1 gpm by RCDT level increase calculation.

Which of the following seal failure(s) have occurred on 11 RCP?

A. #1 seal only.

B. #2 seal only.

C. #3 seal only.

D. #1 and #2 seals.

98
Given the following conditions on Unit 2:

- Currently at 88% power, returning to 100% after one hour of testing at 80% power.
- The rod control system is in automatic with Control Bank D (CBD) at 158 steps.
- The Reactor Operator notes that CBD rods are moving IN with NO demand signal.
- Tavg and reactor power are slowly decreasing.

Which of the following describes the required operator actions if rod control is taken to MANUAL and rod motion does NOT stop?

A. Dilute to maintain Tavg at Tref until CBD is fully inserted

B. Manually trip the reactor and go to 2E-0.

C. Open the lift coil disconnect switches for CBD rods.

D. Reduce turbine load in MANUAL to maintain Tavg at Tref.

99
Which of the following describes how Emergency Operating Procedure substeps with letters or bullets are implemented?

A. Lettered substeps MUST be performed in order.
Bulleted substeps MUST be performed in order.

B. Lettered substeps MUST be performed in order.
Bulleted substeps MAY be performed in any order.

C. Lettered substeps MAY be performed in any order.
Bulleted substeps MUST be performed in order.

D. Lettered substeps MAY be performed in any order.
Bulleted substeps MAY be performed in any order.

100

The Unit 1 Shift Supervisor directs a control room evacuation due to a major fire in the Relay Room. Which of the following actions must be promptly taken by the Unit 2 Lead Plant Equipment and Reactor Operator (LPERO)?

A. Proceed to the D5 Building and take the assigned actions to assure that safeguards Bus 25 and its associated 480V buses are energized.

B. Proceed to the auxiliary building to disable the PORVs, Unit 1 MSIVs, and the steam supply valves to 11 TDAFWP; and align charging pump for RCS inventory control.

C. Check that both turbines are tripped at the front standards, and then proceed with two SCBA to the hot shutdown panels.

D. Proceed to the screenhouse and verify that fire header pressure is greater than 90 psi.

ANSWER	001	c.	REFERENCE C12.5 AOP1, steps 2.4.1 to 2.4.3 New Memory 001AA1.04
ANSWER	002	a.	REFERENCE PWR Reactor Theory Chapter 4 pages 12-13 (General Physics Rev 1). New 003AK1.17
ANSWER	003	a.	REFERENCE TS 3.10.G.4 and COLR, Fig 6. Modified 005AK3.02
ANSWER	004	d.	REFERENCE E-1 step 2 basis Modified 011EK2.02
ANSWER	005	d.	REFERENCE ECA-1.2, pg. 3 and Background. New W/E04EK2.02
ANSWER	006	c.	REFERENCE 1ES-0.0 summary basis. Modified W/E01EK3.04
ANSWER	007	b.	REFERENCE C14 AOP1, pg. 4. Modified 015AK2.08
ANSWER	008	b.	REFERENCE ES-0.4 Basis, pg. 3. Bank W/E10EK2.01
ANSWER	009	d.	REFERENCE C12.5 AOP1, pg. 2. New 024AK3.01

ANSWER	010	d.	REFERENCE T.S. 3.3.C.2, TSI 3.3-14 New 026AG2.1.33
ANSWER	011	d.	REFERENCE F-0.1 New 029EA2.01
ANSWER	012	c.	REFERENCE ECA-2.1, pg. 3 and Basis, pg. 2. Modified W/E12EK2.02
ANSWER	013	c.	REFERENCE F-0.4 Basis, pg. 1; 2FR-P.1 basis, summary. Modified W/E08EK2.02
ANSWER	014	d.	REFERENCE P8174L-002, pg. 12. New 051AK3.01
ANSWER	015	c.	REFERENCE P8186L-008, pg. 10. New 055EG2.2.03
ANSWER	016	c.	REFERENCE P8184L-002, pg. 38. New 057AA1.05
ANSWER	017	d.	REFERENCE P8184L-002, pg. 22; P8186L-015, pg. 11. Modified 057AA2.19
ANSWER	018	c.	REFERENCE ODCM Table 2.1 New 059AK3.01
ANSWER	019	d.	REFERENCE C35 limitation 4.1.3 New 062AA1.01

ANSWER	020	c.	REFERENCE B31B, pg. 4. Modified 067AK3.01
ANSWER	021	d.	REFERENCE F5 App B, pg. 5, 6 New 068AA1.28
ANSWER	022	d.	REFERENCE 1FR-Z.1 page 3 and 1FR-H.1 page 3 New W/E14EK1.03
ANSWER	023	b.	REFERENCE FR-C.1 step 11. New 074EA2.08
ANSWER	024	b.	REFERENCE ODCM, pg. 26; P8182L-001C, pg. 25. New 076AG2.3.08
ANSWER	025	c.	REFERENCE Fig B18C-08 Modified 007EA1.02
ANSWER	026	d.	REFERENCE P8197L-012, pg. 40. New 008AK3.03
ANSWER	027	d.	REFERENCE CDA LP P8188L-003 pg 15 New 009EK2.03
ANSWER	028	d.	REFERENCE ES-1.1, pg. 9, Steam Tables Modified W/E03EA2.01

ANSWER	029	c.	REFERENCE 1ECA-1.1 step 9 basis New W/E11EK3.03
ANSWER	030	a.	REFERENCE B15 section 3.4. New 025AA2.06
ANSWER	031	b.	REFERENCE 1C20.6 section 5.35. New 027AA1.05
ANSWER	032	d.	REFERENCE TS table 3.5-2a, SR trips (Startup), applicable mode 2 note c, below the P-6 setpoint. New 032AG2.1.7
ANSWER	033	c.	REFERENCE P8197L-013, pg. 24; C4 AOP2; EPRI guidance on SG leakage New 037AK1.02
ANSWER	034	b.	REFERENCE T.S. Basis pg B.3.1-8 New 038EA2.14
ANSWER	035	c.	REFERENCE 1C28.3 Precaution 3.8. New 054AG2.1.32
ANSWER	036	b.	REFERENCE FR-H.1, pg. 8, 9. New W/E05EG2.4.06
ANSWER	037	b.	REFERENCE ARP 47024-1105, -1204; P8186L-005, pg. 6, 13. Modified 058AK1.01

ANSWER 038 c.

REFERENCE
P8182L-002, pg. 15; ARP 47048 2R-30.
New
060AK3.03

ANSWER 039 d.

REFERENCE
P8182L-002, pg. 24, 25; F3-2, pg. 16.
Modified
W/E16EG2.4.45

ANSWER 040 d.

REFERENCE
C34 AOP1, pg. 3, 13.
Bank
065AA1.05

ANSWER 041 d.

REFERENCE
P8170L-006, pg. 15
New
028AK3.02

ANSWER 042 b.

REFERENCE
Table B20.5-3, Safeguards Bus Load Restoration
Bank
056AK3.01

ANSWER 043 a.

REFERENCE
B18C page 17.
New
W/E13EK2.01

ANSWER 044 c.

REFERENCE
P8184L-002, pages 21 and 44 and Figure B9A-1
New
001K5.69

ANSWER 045 b.

REFERENCE
P8172L-001a, page 15 and B12A-2
New
003K6.04

ANSWER 046 b.

REFERENCE
C12.5 Figure 2 & 3, P8188L-015 pages 8 - 11
New
004K5.36

ANSWER	047	c.	REFERENCE B18C, pg. 20. Bank 013K6.01
ANSWER	048	a.	REFERENCE B6 New 014K1.01
ANSWER	049	d.	REFERENCE Figure B9A-10 Modified 015A4.02
ANSWER	050	a.	REFERENCE Fig. B10-15, Load List for 2EMB New 017K3.01
ANSWER	051	a.	REFERENCE C35 AOP4, page 3 New 022A2.04
ANSWER	052	d.	REFERENCE C14 AOP1 table 1 New 026K1.02
ANSWER	053	a.	REFERENCE B28A page 9 Modified 056K4.14
ANSWER	054	c.	REFERENCE 1C28.2, page 32 New 059A1.03
ANSWER	055	b.	REFERENCE B28B section 4.2 New 061A3.04
ANSWER	056	a.	REFERENCE Figure B20.9-01 Bank 063K1.02

ANSWER	057	c.	REFERENCE ODCM H4, Section 4.1, 2.7 New 068K5.03
ANSWER	058	c.	REFERENCE C47048, page 1 Modified 068A4.03
ANSWER	059	a. & b.	REFERENCE B21A Section 4.1; B12B section 3.7.C NF-40751-18 (didn't state whether in AUTO or MANUAL New 071K6.10
ANSWER	060	a.	REFERENCE Logic NF-40781-1 New 003 A3.05
ANSWER	061	a.	REFERENCE Power Distribution Panel Report pages for 480V BUS 121 and MCC 1A2 New 061K2.01
ANSWER	062	c.	REFERENCE B11, page 23; Logic NF-40750-6 New 072A4.03
ANSWER	063	c.	REFERENCE Figure B7-4 New 002A1.08
ANSWER	064	c.	REFERENCE Mollier Diagram New 010K5.02
ANSWER	065	d.	REFERENCE P8172L-001a, page 19 New 011K2.01

ANSWER	066	b.	REFERENCE B8, page 13 New 012 K3.02
ANSWER	067	b.	REFERENCE B4A section 3.5.3, detector is density-compensated, sealed reference leg D/P level transmitter New 016K6.01
ANSWER	068	c.	REFERENCE C16 AOP1 step 2.4.4, 2.4.6 New 034A2.02
ANSWER	069	c.	REFERENCE C19.4 section 1.0 New 028K1.01
ANSWER	070	c.	REFERENCE C47016-0504 step 4, D5.2 AOP3 symptom 2.1.3 New 033G2.4.04
ANSWER	071	b.	REFERENCE BACKGROUND INFORMATION FOR 1FR-H.5, page 2 New 035K3.03
ANSWER	072	d.	REFERENCE Fig. B18C-03 Bank 039K4.05
ANSWER	073	c.	REFERENCE B26, page 2 and Figures B26-01 and B37A-01 New 055K4.02
ANSWER	074	c.	REFERENCE B22B section 3.4.1 New 062A2.02

ANSWER	075	d.	REFERENCE B38A and B38B New 064G2.4.47
ANSWER	076	d.	REFERENCE C12.1, Caution 4.8, Caution Sections 5.4 and 5.6 New 073K5.03
ANSWER	077	c.	REFERENCE B35 section 3.9.1, AB-3 step 2.4.4 New 075K4.01
ANSWER	078	b.	REFERENCE C34, page 5 and Figure B34-01 New 079A4.01 (added during exam: 121 Air Compressor is being taken OOS.)
ANSWER	079	c.	REFERENCE Fig B19-9; ARP 47047 R-25 Bank 103A3.01
ANSWER	080	a.	REFERENCE P8180L-003, page 25-27; 1C15 AOP3 page 3-4. Bank 005K6.11
ANSWER	081	b.	REFERENCE C14 AOP1 pg 10 New 008G2.4.11
ANSWER	082	a.	REFERENCE C35 AOP1 page 12. New (added during exam: Unit 2: Reactor trip, loss offsite power, no accident) 076K3.05
ANSWER	083	b.	REFERENCE B34 pages 9, 12, 13 Bank 078G2.4.31

ANSWER	084	a.	REFERENCE 5AWI 1.6.0 section 6. Bank (added during exam: Sufficient operations personnel were there in required numbers, but engineering and management are not on site) 2.1.1
ANSWER	085	b.	REFERENCE SWI 0-2, page 4 & 16; TS 6.0.B.3 Modified 2.1.4
ANSWER	086	d.	REFERENCE SWI O-10 section 7.9.9 New 2.1.6
ANSWER	087	b.	REFERENCE P8172L-001a page 33 and 34 Modified 2.1.34
ANSWER	088	b.	REFERENCE SWI 0-50 page 3 & 5; C1B section 5.1.2 New 2.2.2
ANSWER	089	d.	REFERENCE P8171L-009 page 19, 23 & 24 and Technical Specification 4.0.B New 2.2.12
ANSWER	090	a.	REFERENCE 5AWI 3.12.4 sect. 6.2.9 New 2.2.21
ANSWER	091	b.	REFERENCE 10CFR20 subpart C ¶20.1201 (a)(1)(i); F2 page 19 & 20 Modified 2.3.1
ANSWER	092	a.	REFERENCE F2 page 3 Bank 2.3.2

ANSWER	093	a.	REFERENCE P8182L-001 pages 27-32 &41-42; P8182L-002 pages 27-28; C21.1.3.2 page 3-5 New 2.3.3
ANSWER	094	a.	REFERENCE F2 page 22 New 2.3.5
ANSWER	095	a.	REFERENCE F3-18 Figure 1 Bank 2.3.10
ANSWER	096	d.	REFERENCE 1E-4 Modified 2.4.1
ANSWER	097	a.	REFERENCE 1C3 AOP3 page 2-4 Modified 2.4.4
ANSWER	098	b.	REFERENCE 1C5 AOP2 steps 2.4.2, 2.4.3 New 2.4.11
ANSWER	099	b.	REFERENCE SWI O-10 section 7.9.7.c Bank 2.4.19
ANSWER	100	a.	REFERENCE F5 APP.B page 6 & 37 Modified 2.4.34

ATT. A

121 WASTE GAS COMPRESSOR CONTROL LOGIC

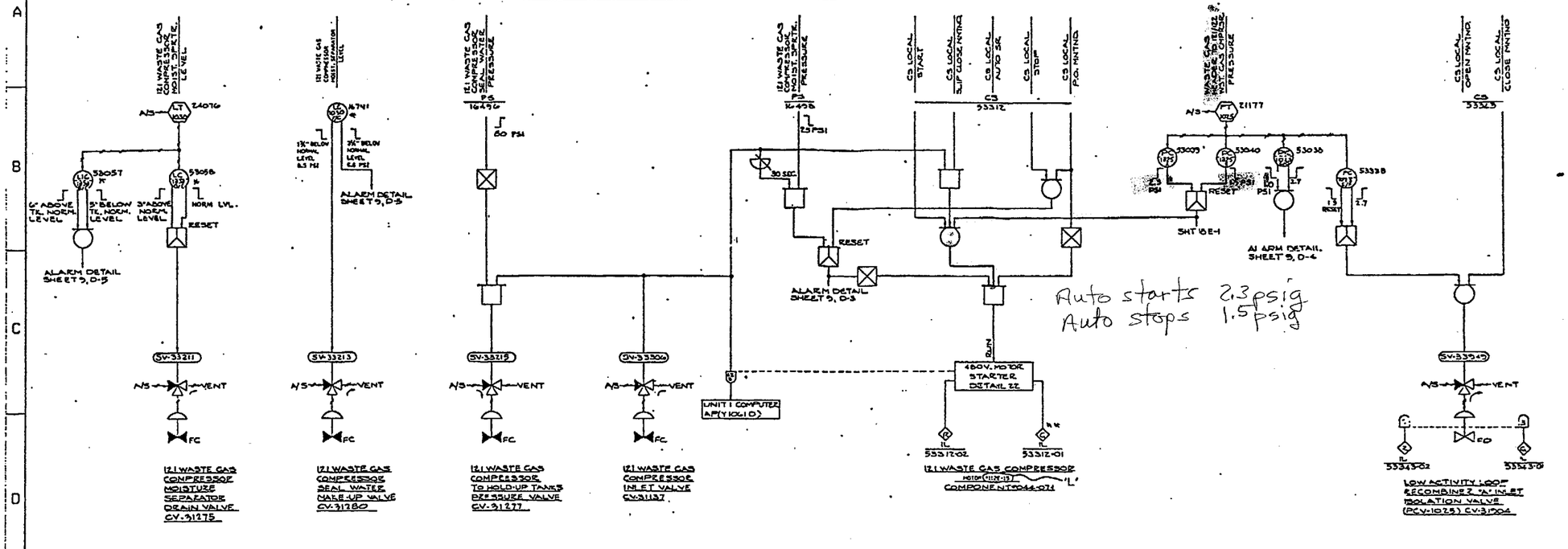

Auto starts 2.3 psig
Auto stops 1.5 psig

** GEN. LT. TURNS OFF ON PULLOUT POS. OF CONT. SW.

122 WASTE GAS COMPRESSOR CONTROL LOGIC

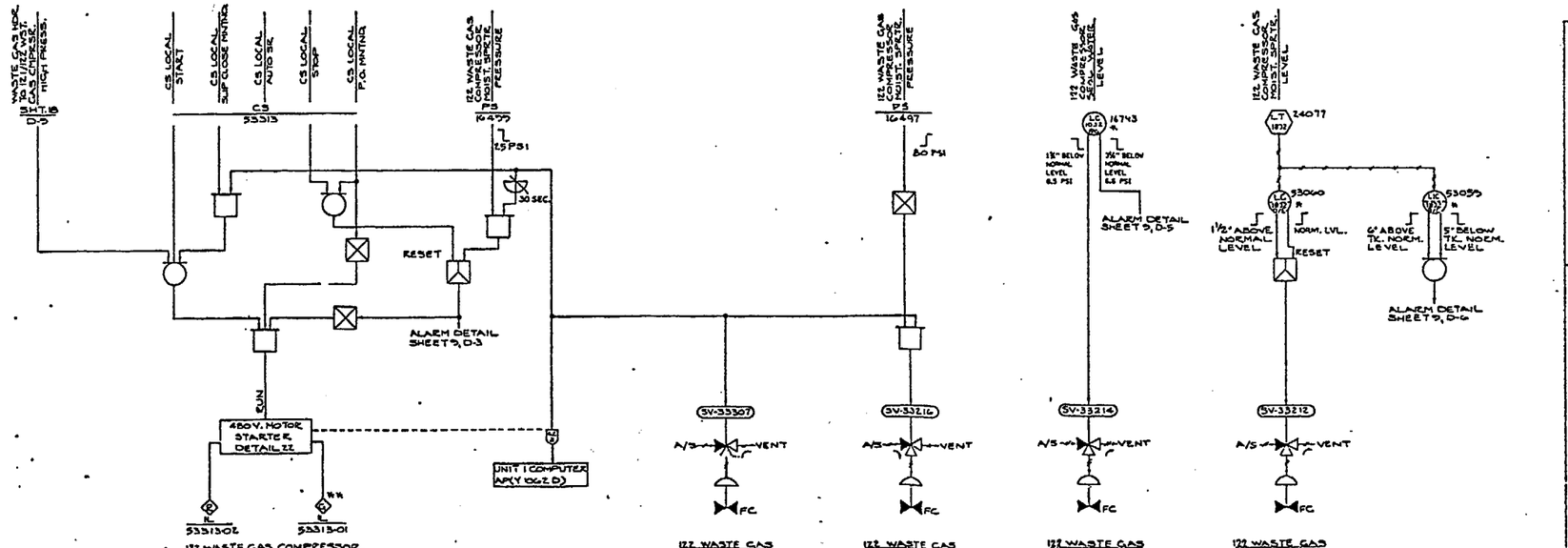

REVISIONS

K	AS BUILT - REVISED W/SC MOISTURE SEPARATOR LOW PRESS. TRIP TIME DELAY PER SWR# PE-92-19 DWN: JAN 1-31-92 CHKD: BY 1/31/92 APD: # PLANED:
L	AS BUILT - REVISED AS SHOWN CONNECTED MOTOR NUMBERS TO REFLECT 480 CHANGES PER CMR PE-95-179 DWN: 10-6-95 CHK'D: APD: # PLANED:

SYSTEM CODE SYMBOL WG
FLOW DIAGRAM X HIAW 1-124

INTERLOCK LOGIC DIAGRAM
WASTE GAS DISPOSAL SYSTEM
UNITS 1 AND 2

NORTHERN STATES POWER COMPANY
PRAIRIE ISLAND NUCLEAR GENERATING PLANT

NF-40751-18

121 WASTE GAS COMPRESSOR CONTROL LOGIC

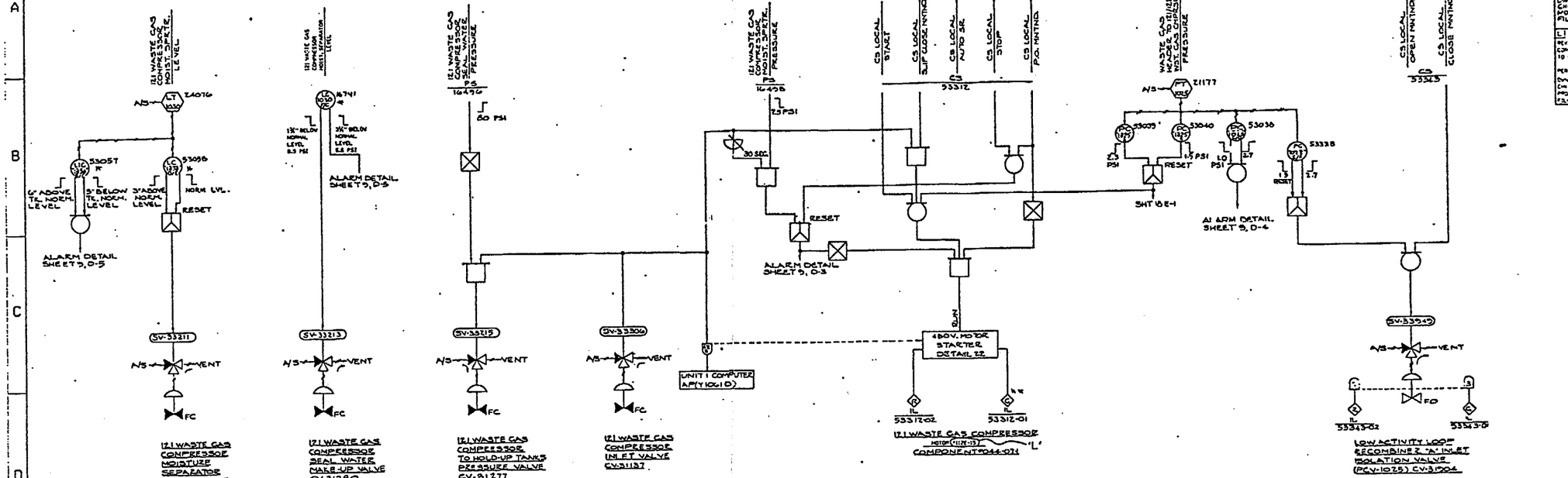

H.H. GEN. LT. TURNS OFF ON PULL-OUT POS. OF CONT. SW.

122 WASTE GAS COMPRESSOR CONTROL LOGIC

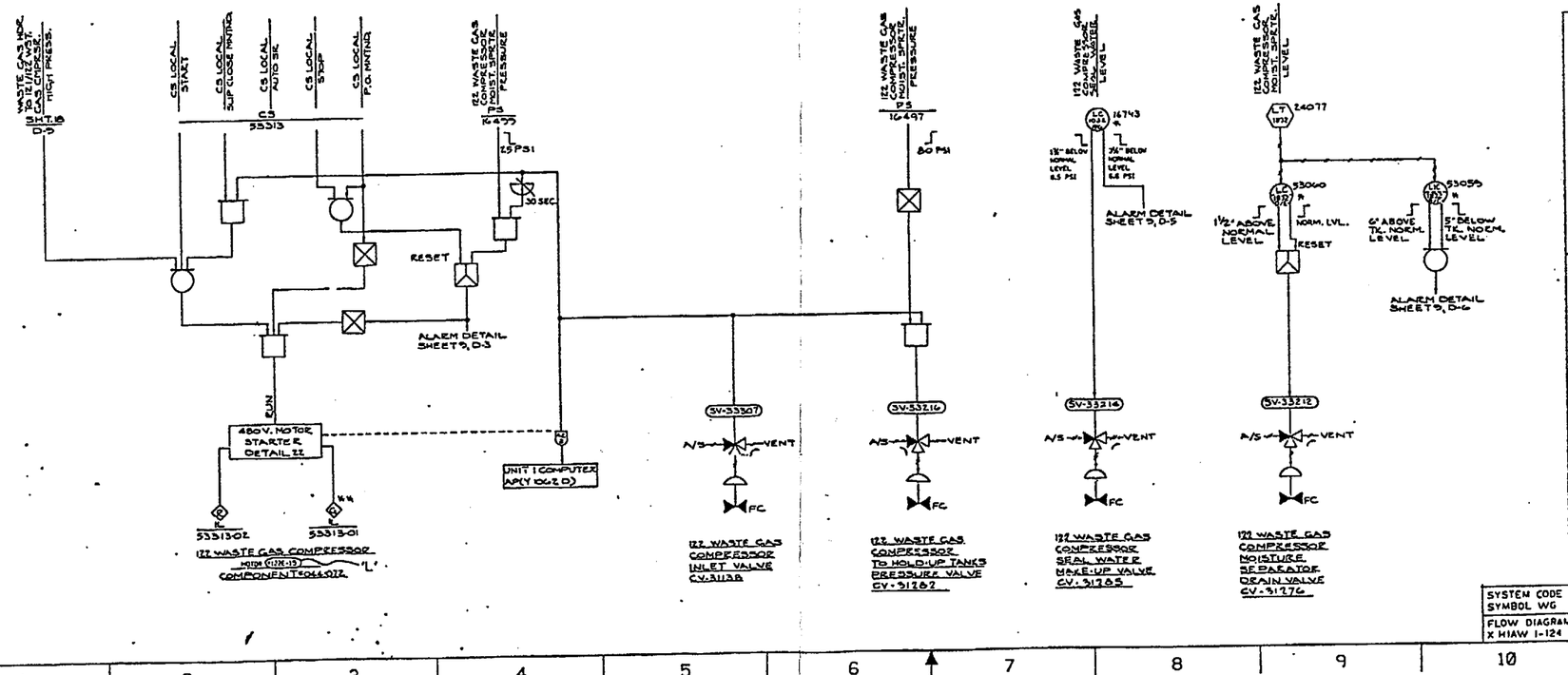

REVISIONS

A	AS BUILT - REVISED WGC MOISTURE SEPARATOR LOW PRESS. TRIP TIME DELAY PER DCR# PZ-92-19 DRAWN: JWM 1-31-92 CHK'D: SW 2/6/92 APPD: [illegible] FILMED: [illegible]
B	AS BUILT - REVISED AS SHOWN CORRECTED MOTOR NUMBERS TO REFLECT SBO CHANGES PER DCR PZ-95-179 DRAWN 10-6-95 CHK'D [illegible] APPD: [illegible] FILMED [illegible]

SYSTEM CODE SYMBOL WG

FLOW DIAGRAM X M1AW 1-124

INTERLOCK LOGIC DIAGRAM
WASTE GAS DISPOSAL SYSTEM
UNITS 1 AND 2

NORTHERN STATES POWER COMPANY
PRAIRIE ISLAND NUCLEAR GENERATING PLANT

NF-40751-18

FINAL AS-ADMINISTERED OPERATING TEST

FOR THE PRAIRIE ISLAND INITIAL EXAMINATION THE WEEK OF MAY 15, 2000

FINAL AS-ADMINISTERED ADMINISTRATIVE JPMS

FOR THE PRAIRIE ISLAND INITIAL EXAMINATION THE WEEK OF MAY 15, 2000

Facility: Prairie Island Date of Examination: 5/15/00

Examination Level (circle one): ~~RO~~ / SRO Operating Test Number: A

Administrative Topic/Subject Description		Describe method of evaluation: 1. ONE Administrative JPM, OR 2. TWO Administrative Questions
A.1	Plant Parameter Verification	JPM RC-20 Perform Alternate Calculation of Reactor Thermal Power – 2.1.19 [3.0]
	Fuel Handling	JPM New- Damaged Fuel during Fuel Handling in Containment– 2.1.20 [4.2] JPM #00-SRO-A.1
A.2	Tagging & Clearances	JPM New- Review I&R Form for Closeout 2.2.13 [3.8] JPM #00-SRO-A.2
A.3	Perform Procedures to Reduce Exposure	JPM New- Conduct an Emergency Plant Evacuation 2.3.10 [3.3] JPM 00-SRO-A.3
A.4	Emergency Action Levels and Classification	JPM Admin-4 Perform Interim Emergency Director Actions – 2.4.38 [4.0]

JOB PERFORMANCE MEASURE WORKSHEET

TASK TITLE: PERFORM ALTERNATE CALCULATION OF REACTOR THERMAL POWER

JPM NUMBER: RC-20S **REV.** 0

RELATED PRA INFORMATION (SEE PITC 2.3): None

TASK NUMBERS: CRO 0150070201

K/A NUMBERS: 2.1.23

APPLICABLE METHOD OF TESTING:

Simulate Performance: [ ] Actual Performance: [x]

Evaluation Location: Turbine Building: [ ] Auxiliary Building: [ ]

Simulator: [x] Control Room: [ ]

Other: [ ]

Time for Completion: 20 Minutes Time Critical: **NO**

TASK APPLICABILITY: (Check all that apply) SRO: [x] RO: [x] NLO: [ ]

PREPARED BY: Mark Jones **DATE:** 4/26/00

APPROVED BY: **DATE:** 5-8-00

Operator: _____ **(SRO / RO / NLO)**

Evaluator: _____

Date: _____

READ TO THE OPERATOR

I will explain the initial conditions, which step(s) to simulate or discuss, and provide initiating cues. When you complete the task successfully, the objective for this job performance measure will be satisfied.

INITIAL CONDITIONS:

- Unit 1 is operating at power.
- NIS inputs into the "CALM" program are OOS. **DO NOT DISPLAY ERCS CALM OR TPM DURING PERFORMANCE OF THIS JPM.**
- SP 1005, "Unit 1 NIS Power Range Daily Calibration", is due and has been completed through Section 6.0.

INITIATING CUES:

- The SS directs you to perform SP 1005B, "Unit 1 Alternate Calculation Of Reactor Thermal Power", beginning at Section 7.0.
- **DO NOT DISPLAY ERCS CALM OR TPM DURING PERFORMANCE OF THIS JPM.**

JPM PERFORMANCE INFORMATION

Required Materials: Steam Tables, Calculator, and Copy of SP 1005B with steps completed through Section 6.0.

General References: SP 1005B

Task Standards: SP 1005B completed accurately.

Start Time: _____

NOTE: When providing "Evaluator Cues" to the examinee, care must be exercised to avoid prompting the examinee. Typically cues are only provided when the examinee's actions warrant receiving the information (i.e. the examinee looks or asks for the indication).

NOTE: Critical steps are marked with an "X" below the performance step number. Failure to meet the standard for any critical step shall result in failure of this JPM.

Performance Step: **Critical X (S-1)**	Record the Parameter sources and values for the FIRST SET of data in Table 1. N/A portions of table that are not used.
Standard:	First set of data points are recorded in Table 1: • Steam Generator Pressure • Feedwater Temperature • Feedwater Flow • Steam Generator Blowdown Flow
Evaluator Note:	**The preferred source for these data points is ERCS, as indicated by the sequential listing in the procedure of potential sources for each data point.** **These data points can be obtained from ERCS by creating a "Current Value Chart" or by using Group Display "SP 1005B."** **If the examinee does not record the source of data as required on Table 1, the evaluator should record the data source (computer point ID, instrument, etc.) in the comments section of this JPM step.**
Evaluator Cue:	**If asked, inform examinee that, "ERCS is the preferred data source."**
Performance:	**SATISFACTORY** _____ **UNSATISFACTORY** _____
Comments:	_____

Performance Step: **Critical X (S-2)**	Five (5) minutes after the initial data was recorded, using the same sources as identified above, record the SECOND SET of data in Table 1.
Standard:	Second set of data points are recorded in Table 1: • Steam Generator Pressure • Feedwater Temperature • Feedwater Flow • Steam Generator Blowdown Flow
Performance:	**SATISFACTORY** _____ **UNSATISFACTORY** _____
Comments:	_____

Performance Step: **Critical X (S-3)**	Complete the Average column.
Standard:	First and second sets of data points averaged and averages recorded in Table 1.
Performance:	**SATISFACTORY** _____ **UNSATISFACTORY** _____
Comments:	_____

Performance Step: **Critical X (S-4)**	Use Table 1 Average Data and calculate the % full power by completing Table 2.
Standard:	Table 1 Average Data used in Table 2 and Core Thermal Power calculated to be between 99.5% and 99.7%.
Evaluator Cue:	**When examinee has completed calculation of actual % of full power and satisfied that his/her number is correct, then inform examinee that, "Table 1 and Table 2 will be reviewed for accuracy and the calculated percent reactor thermal power recorded in SP 1005 with this SP attached."**
Performance:	**SATISFACTORY** _____ **UNSATISFACTORY** _____
Comments:	_____

Terminating Cues: **When the completed Table 1 and Table 2 (SP 1005B) have been collected from the examinee, inform examinee that, "this JPM is complete."**

Stop Time: _____

SIMULATOR SETUP

Instructor Guide:

- Initialize the simulator to IC-10.
- Place the simulator in "RUN" and allow ERCS to initialize.
- Verify CALM is indicting CORE THERMAL POWER (PERCENT) at 99.6%.
- Verify CALM, TPM, and Group Display, "SP1005B" are not displayed on any ERCS screens.
- After examinee has obtained second set of data, place the simulator in "FREEZE".

SIMULATOR SETUP

Relative Order	System or Panel Drawing	TYPE	CODE	Severity or Value	Event Trigger	TIMING	DESCRIPTION
NONE							

TURNOVER SHEET

INITIAL CONDITIONS:

- Unit 1 is operating at power.
- NIS inputs into the "CALM" program are OOS. **DO NOT DISPLAY ERCS CALM OR TPM DURING PERFORMANCE OF THIS JPM.**
- SP 1005, "Unit 1 NIS Power Range Daily Calibration", is due and has been completed through Section 6.0.

INITIATING CUES:

- The SS directs you to perform SP 1005B, "Unit 1 Alternate Calculation Of Reactor Thermal Power", beginning at Section 7.0.
- **DO NOT DISPLAY ERCS CALM OR TPM DURING PERFORMANCE OF THIS JPM.**

SELECT FUNC. KEY OR TURN-ON CODE CALR :

APR 22,2000
11:26:09

UNIT 1 NUCLEAR POWER RANGE CHANNEL
CALORIMETRIC CALCULATION SUMMARY
REAL TIME

PAGE 1 OF 3
CAL TIME 11:25
CAL DATE 04/22/00

TOTAL CORE THERMAL POWER	VALUE	QUALITY	ENG. U.
STEAM GENERATOR THERMAL POWER - LOOP A	2814.135	DALM	MBTU/HR
- LOOP B	2815.300	DALM	MBTU/HR
TOTAL	5629.433	DALM	MBTU/HR
TOTAL CORE THERMAL POWER (CTP)	1643.39	DALM	MWT
CORE THERMAL POWER (PERCENT)	99.60	DALM	% POWER
AVERAGE OF NIS READINGS	99.82	DALM	% POWER
CAL THERMAL - NIS POWER DEVIATION	-.21	DALM	% POWER

SUMMARY OF NIS INDICATIONS	VALUE	QUALITY	ENG. U.	CAL - NIS
NUCLEAR POWER RANGE CHANNEL N-41	99.78	DALM	% POWER	-.18
NUCLEAR POWER RANGE CHANNEL N-42	99.80	DALM	% POWER	-.20
NUCLEAR POWER RANGE CHANNEL N-43	99.84	DALM	% POWER	-.24
NUCLEAR POWER RANGE CHANNEL N-44	99.86	DALM	% POWER	-.26

USER SELECTED CALCULATION OPTIONS

FEEDWATER FLOW OPTION	LOOP A - 1 LOOP B - 1	FEEDWATER TEMPERATURE	LOOP A - 1 LOOP B - 1
STEAM GEN. PRESSURE	LOOP A - 1 LOOP B - 1	LOOP BLOWDOWN FLOW	LOOP A - 1 LOOP B - 1

NUCLEAR POWER OPTION - 1

F1= PASS CALC

F2= KBD= NORMAL

F3= FREQUENCY

F4= MAIN MENU

F5= MODE= FULL POWER

F6=

S1-A

ENTER UPDATE RATE IN SEC (5-1800): [redacted] GRPDIS

APR 22,2000 [redacted]
11:37:46

GROUP DISPLAY

SP1005B ALTERNATE CALM PAGE 1 OF 1

POINT ID	DESCRIPTION		CURRENT VALUE	ENGR UNIT	ALARM LIMIT	QUAL CODE
1U2015A	STEAM GENERATOR A AVERAGE PRESS		708.7	PSIG		DALM
1P0400A	LOOP A STM GEN PRESS 468	5	708.7	PSIG		GOOD
1P0401A	LOOP A STM GEN PRESS 469	5	708.7	PSIG		GOOD
1U2016A	STEAM GENERATOR B AVERAGE PRESS		708.7	PSIG		DALM
1P0420A	LOOP B STM GEN PRESS 478	5	708.7	PSIG		GOOD
1P0421A	LOOP B STM GEN PRESS 479	5	708.7	PSIG		GOOD
1P0422A	LOOP B STM GEN PRESS 483	5	708.7	PSIG		GOOD
1T0418A	LOOP A STM GEN FW TEMP	5	432.1	DEGF		DALM
1U2011A	STEAM GENERATOR A FEEDWATER TEMP		432.1	DEGF		DALM
1T0438A	LOOP B STM GEN FW TEMP	5	432.1	DEGF		DALM
1U2012A	STEAM GENERATOR B FEEDWATER TEMP		432.1	DEGF		DALM
1U2028A	STEAM GENERATOR A FEEDWATER FLOW		3.580	MLB/HR		DALM
1U2009A	STEAM GENERATOR A AVG FW SQRT DP		15.5	SQRTDP		DALM
1F2511A	A FW 495 SQRT INCHES H20	5	15.5364	SQRTIN		GOOD
1AFWAVSQ	1A FEED WATER 5 MIN AVG SQUARED		241.38	IN DP		DALM
1U2029A	STEAM GENERATOR B FEEDWATER FLOW		3.577	MLB/HR		DALM
1U2010A	STEAM GENERATOR B AVG FW SQRT DP		15.5	SQRTDP		DALM
1F2512A	B FW 497 SQRT INCHES H20	5	15.4581	SQRTIN		GOOD
1BFWAVSQ	1B FEED WATER 5 MIN AVG SQUARED		238.95	IN DP		DALM
1U2017A	STEAM GENERATOR A BLOWDOWN FLOW		59.5	GPM		DALM
1U2018A	STEAM GENERATOR B BLOWDOWN FLOW		45.8	GPM		DALM

F1= F2=TREND F3=BAR F4= F5=LIBRARY F6=NEW GROUP
KBD= NORMAL AMODE= FULL POWER S1-A*

SELECT FUNC. KEY OR TURN-ON CODE [redacted]

APR 22, 2000
11:42:46

GROUP DISPLAY

SP1005B ALTERNATE CALM PAGE 1 OF 1
5 SECOND UPDATE RATE

POINT ID	DESCRIPTION	CURRENT VALUE	ENGR UNIT	ALARM LIMIT	QUAL CODE
1U2015A	STEAM GENERATOR A AVERAGE PRESS	708.7	PSIG		DALM
1P0400A	LOOP A STM GEN PRESS 468 5	708.7	PSIG		GOOD
1P0401A	LOOP A STM GEN PRESS 469 5	708.7	PSIG		GOOD
1U2016A	STEAM GENERATOR B AVERAGE PRESS	708.7	PSIG		DALM
1P0420A	LOOP B STM GEN PRESS 478 5	708.7	PSIG		GOOD
1P0421A	LOOP B STM GEN PRESS 479 5	708.7	PSIG		GOOD
1P0422A	LOOP B STM GEN PRESS 483 5	708.7	PSIG		GOOD
1T0418A	LOOP A STM GEN FW TEMP 5	432.1	DEGF		DALM
1U2011A	STEAM GENERATOR A FEEDWATER TEMP	432.1	DEGF		DALM
1T0438A	LOOP B STM GEN FW TEMP 5	432.1	DEGF		DALM
1U2012A	STEAM GENERATOR B FEEDWATER TEMP	432.1	DEGF		DALM
1U2028A	STEAM GENERATOR A FEEDWATER FLOW	3.580	MLB/HR		DALM
1U2009A	STEAM GENERATOR A AVG FW SQRT DP	15.5	SQRTDP		DALM
1F2511A	A FW 495 SQRT INCHES H2O 5	15.5366	SQRTIN		GOOD
1AFWAVSQ	1A FEED WATER 5 MIN AVG SQUARED	241.38	IN DP		DALM
1U2029A	STEAM GENERATOR B FEEDWATER FLOW	3.577	MLB/HR		DALM
1U2010A	STEAM GENERATOR B AVG FW SQRT DP	15.5	SQRTDP		DALM
1F2512A	B FW 497 SQRT INCHES H2O 5	15.4576	SQRTIN		GOOD
1BFWAVSQ	1B FEED WATER 5 MIN AVG SQUARED	238.95	IN DP		DALM
1U2017A	STEAM GENERATOR A BLOWDOWN FLOW	59.6	GPM		DALM
1U2018A	STEAM GENERATOR B BLOWDOWN FLOW	45.9	GPM		DALM

F1= [redacted] F2= [redacted] F3= [redacted] F4= F5= [redacted] F6= [redacted]
KBD= NORMAL AMODE= FULL POWER S1-A*

SELECT FUNC. KEY OR TURN-ON CODE CALM :

APR 22, 2000
11:43:30

UNIT 1 NUCLEAR POWER RANGE CHANNEL
CALORIMETRIC CALCULATION SUMMARY
REAL TIME

PAGE 1 OF 3
CAL TIME 11:43
CAL DATE 04/22/00

TOTAL CORE THERMAL POWER	VALUE	QUALITY	ENG. U.
STEAM GENERATOR THERMAL POWER - LOOP A	2814.169	CALM	MBTU/HR
- LOOP B	2815.138	CALM	MBTU/HR
TOTAL	5629.308	CALM	MBTU/HR
TOTAL CORE THERMAL POWER (CTP)	1643.34	CALM	MWT
CORE THERMAL POWER (PERCENT)	99.60	CALM	% POWER
AVERAGE OF NIS READINGS	99.81	CALM	% POWER
CAL THERMAL - NIS POWER DEVIATION	-.22	CALM	% POWER

SUMMARY OF NIS INDICATIONS	VALUE	QUALITY	ENG. U.	CAL - NIS
NUCLEAR POWER RANGE CHANNEL N-41	99.78	CALM	% POWER	-.18
NUCLEAR POWER RANGE CHANNEL N-42	99.80	CALM	% POWER	-.20
NUCLEAR POWER RANGE CHANNEL N-43	99.82	CALM	% POWER	-.22
NUCLEAR POWER RANGE CHANNEL N-44	99.84	CALM	% POWER	-.24

USER SELECTED CALCULATION OPTIONS

FEEDWATER FLOW OPTION	LOOP A - 1 LOOP B - 1	FEEDWATER TEMPERATURE	LOOP A - 1 LOOP B - 1
STEAM GEN. PRESSURE	LOOP A - 1 LOOP B - 1	LOOP BLOWDOWN FLOW	LOOP A - 1 LOOP B - 1

NUCLEAR POWER OPTION - 1

F1= PREV CALC

F2= KBD= NORMAL

F3= FREQUENCY

F4= MAIN MENU

F5= MODE= FULL POWER

F6=

S1-A*

JOB PERFORMANCE MEASURE WORKSHEET

TASK TITLE: DAMAGED FUEL DURING FUEL HANDLING IN CONTAINMENT

JPM NUMBER: 00-SRO-A.1 **REV.** 0

RELATED PRA INFORMATION (SEE PITC 2.3): None

TASK NUMBERS: CRO 034.ATI.11

K/A NUMBERS: 2.1.20

APPLICABLE METHOD OF TESTING:

Simulate Performance: [ ] Actual Performance: [x]

Evaluation Location: Turbine Building: [ ] Auxiliary Building: [ ]

Simulator: [x] Control Room: [ ]

Other: [ ]

Time for Completion: 10 Minutes Time Critical: **NO**

TASK APPLICABILITY: (Check all that apply) SRO: [x] RO: [x] NLO: [ ]

PREPARED BY: Mark Jones **DATE:** 4/27/00

APPROVED BY: _____ **DATE:** 5-8-00

Operator: _____ **(SRO / RO / NLO)**

Evaluator: _____

Date: _____

READ TO THE OPERATOR

I will explain the initial conditions, which step(s) to simulate or discuss, and provide initiating cues. When you complete the task successfully, the objective for this job performance measure will be satisfied.

INITIAL CONDITIONS:

- Unit 1 is shutdown and in the Refueling Mode.
- Fuel handling is in progress in the Unit 1 containment and the spent fuel pool.
- Containment Fan Coil Units 12 and 14 are OOS for maintenance.
- Containment Fan Coil Units 11 and 13 are off.
- The SRO in charge of fuel handling informs the Control Room that an assembly has been dropped in the core and that bubbles are rising to the surface.
- All fuel handling activities in the containment and the spent fuel pool have been suspended.
- You are the Unit 1 Shift Supervisor and at present alone in the Unit 1 Control Room.

INITIATING CUES:

- Respond to the dropped fuel assembly.
- **SIMULATOR CONDITIONS DO NOT NECESSARILY CORRESPOND TO THE PLANT CONDITIONS FOR REFUELING (COLD SHUTDOWN USED INSTEAD).**

JPM PERFORMANCE INFORMATION

Required Materials: Completed C19.9-1 checklist indicating both doors of the maintenance airlock open.

General References: D5.2 AOP1, C1.6 AOP1, and C19.9-1

Task Standards: Containment evacuated, boundary isolation completed, and CFCUs started.

Start Time: _____

NOTE: When providing "Evaluator Cues" to the examinee, care must be exercised to avoid prompting the examinee. Typically cues are only provided when the examinee's actions warrant receiving the information (i.e. the examinee looks or asks for the indication).

NOTE: Critical steps are marked with an "X" below the performance step number. Failure to meet the standard for any critical step shall result in failure of this JPM.

Performance Step: **Critical __X__ (S-1)**	Initiate CONTAINMENT EVACUATION by actuating the Containment evacuation alarm or verify the alarm has been initiated locally.
Standard:	Containment evacuation alarm actuated in response to report of damaged fuel, by pulling out the CONTAINMENT EVACUATION ALARM - UNIT 1 switch.
Evaluator Note:	**Immediate actions of both D5.2 AOP1 and C1.6 AOP1 require initiation of containment evacuation. C1.6 AOP1 is the actual procedure for initiating the evacuation and is directed as an immediate action in D5.2 AOP1.**
Evaluator Cue:	**When examinee indicates that he/she would actuate the containment evacuation alarm, inform examinee that, "the evacuation alarm is actuated and another operator will complete C1.6 AOP1."**
Performance:	**SATISFACTORY** _____ **UNSATISFACTORY** _____
Comments:	_____

Performance Step: **Critical** _____	Stop all fuel handling in Containment and the SFP.
Standard:	All fuel handling has been stopped in both Containment and the SFP.
Evaluator Note:	**A note at the beginning of this procedure provides guidance to consider E-Plan classification per F3-2.**
Evaluator Cue:	• **If examinee addresses stopping fuel handling in Containment and the SFP, remind examine that per the initial conditions, "all fuel handling activities in the containment and the spent fuel pool have been suspended."** • **If examinee addresses E-Plan classification, inform examinee that, "the SM has arrived in the Control Room and is performing E-Plan duties."**
Performance:	**SATISFACTORY** _____ **UNSATISFACTORY** _____
Comments:	_____

Performance Step: **Critical** _____	Initiate manual Containment Isolation using control board switches.
Standard:	Containment isolation actuation attempted for Unit 1, by using either CS-46085 (MCI-1) or CS-46113 (MCI-2).
Evaluator Note:	**Manual actuation of Containment Isolation will fail requiring manual alignment of components to fulfill the function.**
Performance:	**SATISFACTORY** _____ **UNSATISFACTORY** _____
Comments:	_____

Performance Step: **Critical X (S-2)**	Manually align components in response to failure of Containment Isolation to initiate, such that at least one isolation per penetration is closed.
Standard:	Manual action taken or directed, such that one isolation in each penetration is closed as indicated by white lights illuminated on the Containment Isolation (sugar cube) panel 44104, with the following exceptions: • A6, 1 Reactor Building Instrument Air Valve will not be required to be closed due to current plant conditions (Closed on High Containment Pressure or SI with High Loop A Steam Flow). • A11 and B11, Personnel Outer and Inner Air Lock Doors indicating lights are extinguished when doors are closed (Containment Air Locks are reverse indication of all other valves).
Evaluator Note:	• D8 and E8, 11 and 12 SG Sample Isolation Valves will require direction to the Auxiliary Building Operator or the Duty Chem Tech to close both valves, in the Hot Chem Lab. • C11 and D11, Maintenance Outer and Inner Air Lock Doors will require direction to the Maintenance Air Lock Attendant to close at least one of the doors (Containment Air Locks are reverse indication of all other valves).
Evaluator Cue:	• **When directed as the Auxiliary Building Operator or the Duty Chem Tech to close both 11 and 12 SG Sample Isolation Valves in the Hot Chem Lab, acknowledge direction and after the simulator booth operator illuminates D8 and E8 on panel 44104, inform examinee that, "both 11 and 12 SG Sample Isolation Valves are closed."** • **When directed as the Maintenance Air Lock Attendant to close at least one of the Maintenance Air Lock doors, acknowledge direction and after the simulator booth operator extinguishes C11 and D11 on panel 44104, inform examinee that, "both inner and outer Maintenance Air Lock doors are closed."**
Performance:	**SATISFACTORY** _____ **UNSATISFACTORY** _____
Comments:	_____

Performance Step: **Critical X (S-2)**	Complete Containment Isolation through C19.9, CONTAINMENT BOUNDARY CONTROL DURING COLD SHUTDOWN AND REFUELING SHUTDOWN, Table 2.
Standard:	Maintenance Air Lock Attendant directed to shut at least one Maintenance Air Lock door.
Evaluator Note:	• **The completed C19.9 checklist provided to examinee at beginning of JPM, will indicate both doors of the maintenance airlock open.** • **This step will not need to be performed, if examinee directed closing of at least one Maintenance Air Lock door in the previous step.**
Evaluator Cue:	**When directed as the Maintenance Air Lock Attendant to close at least one of the Maintenance Air Lock doors, acknowledge direction and after the simulator booth operator extinguishes C11 and D11 on panel 44104, inform examinee that, "both inner and outer Maintenance Air Lock doors are closed."**
Performance:	**SATISFACTORY** _____ **UNSATISFACTORY** _____
Comments:	_____

Performance Step: **Critical** _____	Place operable CFCUs in "FAST" speed.
Standard:	11 and 13 CFCUs started in FAST speed, by using CS-46018 and CS-46019 respectively; red FAST lights on, red SLOW lights off, green lights off.
Performance:	**SATISFACTORY** _____ **UNSATISFACTORY** _____
Comments:	_____

Terminating Cues: **When 11 and 13 CFCUs have been started in fast speed, then inform examinee that, "this JPM is complete."**

Stop Time: _____

SIMULATOR SETUP

Instructor Guide:

- Initialize the simulator to IC-2.
- Place the simulator in "RUN" and allow ERCS to initialize.
- Place all four CFCUs in "OFF" and attach secure cards to 12 and 14.
- Verify Containment Evacuation control switch is pushed in on deluge panel behind G panel.
- Enter overrides to have Maintenance Air Lock doors indicate open and Containment Isolation control switches fail to manually initiate ***(Relative Order 0)***.
- Place the simulator in "FREEZE".
- When the examinee has been given the Initial Conditions and Initiating Cues, place the simulator in "RUN".
- During JPM performance, when Auxiliary Building Operator or Duty Chem Tech is directed to close 11 SG Sample Isolation Valve, enter override to illuminate D8 on panel 44104 ***(Relative Order 1a)***.
- During JPM performance, when Auxiliary Building Operator or Duty Chem Tech is directed to close 12 SG Sample Isolation Valve, enter override to illuminate E8 on panel 44104 ***(Relative Order 1b)***.
- During JPM performance, when Maintenance Air Lock Attendant is directed to close at least one Maintenance Air Lock door, enter overrides to extinguish C11 and D11 on panel 44104 ***(Relative Order 2)***.

SIMULATOR SETUP

Relative Order	System or Panel Drawing	TYPE	CODE	Severity or Value	Event Trigger	TIMING	DESCRIPTION
0	PANEL B1-B28	OVRD LO	LO-44104:C11 W	ON			Maintenance Outer Airlock Door Open Light
0	PANEL B1-B28	OVRD LO	LO-44104:D11 W	ON			Maintenance Inner Airlock Door Open Light
0	PANEL B1-B29	OVRD DI	DI-46085	OFF			Containment Isolation Control Switch MCI-1
0	PANEL A-A22	OVRD DI	DI-46113	OFF			Containment Isolation Control Switch MCI-2
1a	PANEL B1-B28	OVRD LO	LO-44104:D8 W	ON			11 SG Sample Isolation Valve Closed Light
1b	PANEL B1-B28	OVRD LO	LO-44104:E8 W	ON			12 SG Sample Isolation Valve Closed Light
2	PANEL B1-B28	OVRD LO	LO-44104:C11 W	DELETE			Maintenance Outer Airlock Door Open Light
2	PANEL B1-B28	OVRD LO	LO-44104:D11 W	DELETE			Maintenance Inner Airlock Door Open Light

TURNOVER SHEET

INITIAL CONDITIONS:

- Unit 1 is shutdown and in the Refueling Mode.
- Fuel handling is in progress in the Unit 1 containment and the spent fuel pool.
- Containment Fan Coil Units 12 and 14 are OOS for maintenance.
- Containment Fan Coil Units 11 and 13 are off.
- The SRO in charge of fuel handling informs the Control Room that an assembly has been dropped in the core and that bubbles are rising to the surface.
- All fuel handling activities in the containment and the spent fuel pool have been suspended.
- You are the Unit 1 Shift Supervisor and at present alone in the Unit 1 Control Room.

INITIATING CUES:

- Respond to the dropped fuel assembly.
- **SIMULATOR CONDITIONS DO NOT NECESSARILY CORRESPOND TO THE PLANT CONDITIONS FOR REFUELING (COLD SHUTDOWN USED INSTEAD).**

JOB PERFORMANCE MEASURE WORKSHEET

TASK TITLE: REVIEW I&R FORM FOR CLOSEOUT

JPM NUMBER: 00-SRO-A.2 **REV.** 0

RELATED PRA INFORMATION (SEE PITC 2.3): None

TASK NUMBERS: SS 342.ATI.28

K/A NUMBERS: 2.2.13

APPLICABLE METHOD OF TESTING:

Simulate Performance: [ ] Actual Performance: [x]

Evaluation Location: Turbine Building: [ ] Auxiliary Building: [ ]

Simulator: [ ] Control Room: [ ]

Other: Anywhere [x]

Time for Completion: 15 Minutes Time Critical: **NO**

TASK APPLICABILITY: (Check all that apply) SRO: [x] RO: [ ] NLO: [ ]

PREPARED BY: Mark Jones **DATE:** 4/27/00

APPROVED BY: _____ **DATE:** 5-8-00

Operator: _____ **(SRO / RO / NLO)**

Evaluator: _____

Date: _____

READ TO THE OPERATOR

I will explain the initial conditions, which step(s) to simulate or discuss, and provide initiating cues. When you complete the task successfully, the objective for this job performance measure will be satisfied.

INITIAL CONDITIONS:

- Work on the package associated with Isolation and Restoration (I&R) number 9908015 has been completed and the tags removed.

INITIATING CUES:

- As the Work Control Center SS, review the I&R form for closeout.
- **Identify ANY and ALL discrepancies in the package and return package to evaluator with SS review unsigned OR return package to evaluator with SS review signed if all paperwork is correct.**

JPM PERFORMANCE INFORMATION

Required Materials: I&R 9908015 completed except for the following discrepancies:

- Isolation Cross-Reference is signed off for Cross-Ref WO's Released on the I&R and yet the there is no signature on the Isolation Cross-Reference for Document No. 9908560.
- Page 3 of 3 of the I&R is missing.
- Isolation Released By date two days later than the Restoration Completed & Computer Updated By date.
- I&R Partial Restoration used with Isolation Cross-Reference still active.
- Returned Normal not indicted (circled) or initialed for Tag No. 1.

General References: 5AWI 3.2.4

Task Standards: I&R 9908015 reviewed and SS review not signed due to 5 discrepancies (4 of 5 discrepancies must be identified for satisfactory performance).

Start Time: _____

NOTE: When providing "Evaluator Cues" to the examinee, care must be exercised to avoid prompting the examinee. Typically cues are only provided when the examinee's actions warrant receiving the information (i.e. the examinee looks or asks for the indication).

NOTE: Critical steps are marked with an "X" below the performance step number. Failure to meet the standard for any critical step shall result in failure of this JPM.

Performance Step: **Critical X (S-1)**	The Shift Supervisor SHALL perform a final review of the restoration of the equipment and/or system. This review SHALL be documented (name, time, date) on the I&R.
Standard:	I&R 9908015 reviewed and SS review signature not signed due to a minimum of 4 of the following 5 possible discrepancies identified: • Isolation Cross-Reference is signed off for Cross-Ref WO's Released on the I&R and yet the there is no signature on the Isolation Cross-Reference for Document No. 9908560. • Page 3 of 3 of the I&R is missing. • Isolation Released By date two days later than the Restoration Completed & Computer Updated By date. • I&R Partial Restoration used with Isolation Cross-Reference still active. • Returned Normal not indicted (circled) or initialed for Tag No. 1.
Evaluator Note:	**A discrepancy identified that is not indicated here must be evaluated after JPM performance.**
Performance:	**SATISFACTORY** _____ **UNSATISFACTORY** _____
Comments:	_____

Terminating Cues: **When examinee returns the I&R either signed or unsigned, inform examinee that, "this JPM is complete."**

Stop Time: _____

TURNOVER SHEET

INITIAL CONDITIONS:

- Work on the package associated with Isolation and Restoration (I&R) number 9908015 has been completed and the tags removed.

INITIATING CUES:

- As the Work Control Center SS, review the I&R form for closeout.
- **Identify ANY and ALL discrepancies in the package and return package to evaluator with SS review unsigned OR return package to evaluator with SS review signed if all paperwork is correct.**

Prairie Island Nuclear Plant

9908015

CORRECTIVE Work Order STANDARD Master

CRITICAL WORK

Need Date ... 04/20/00
WO Priority ... 5 UNIT 2 OUTAGE
WO Description ... Isolate Bkrs 211A & 212A and XFMR 21A for PM

Crit Work. Y
System ... EB
Steps 1

Route To	Review Required	Computer Updated	Date	Rvw Stat
ENGR	SECOND LEVEL LEAD ENGINEER REVIEW	MICHAEL R. JOHNSON	02/18/00	35
QC	QUALITY SERVICES REVIEW	CHARLES E. BUSDOSH	02/21/00	35
WE	WORK REQUEST COORDINATOR - ELECTRICAL	PAUL E. HELLEN	02/21/00	35
WM	WORK REQUEST COORDINATOR - MECHANICAL	PAUL E. HELLEN	02/21/00	35
OWO	OPERATIONS WORK ACTIVITY OVERVIEW	WAYNE D. EPPEN	03/01/00	38
WS	WORK SUPERVISOR REVIEW - MAJOR TRADE	MICHAEL E. SCHMIDT	03/06/00	39
E	Major Trade Work Supervisor			
ASW	APPROVAL TO START WORK	STEVE N. CHEZICK	04/20/00	75
RTS	RETURN TO SERVICE			91
PWR	POST WORK REVIEW			93

Equip Id 21A/XFMR
Equip Name ..... 21A TRANSFORMER
Func Sys ..... EB Location ... BUS 211
Bldg ..... D5/D6 Floor ....
Maint Area .....

Requestor ..... TODD E. BUTLER Req Date ... 07/19/99
Repair Tag Num ....
Repair Tag Loc ....

Plant Sponsor ..... TODD E. BUTLER Ph Ext ... 4758
Assigned ..... JEFFEREY O. CURTIS Ph Ext ... 4248
Task ID .....
Safety Reqmt ..... ELEC HAZARD ENERGIZED COMPONENTS IN WORK AREA
Early Date ..... Due Date ... 04/20/00

Major Trade .... E
WO Class ..... PM
Impact ..... Z
Condition 6-P
Account ..... EEEBMO
Project .....
Outage Task ID .
Late Date .....

Work Req/Symptom: Isolate breaker 211A, breaker 212A and transformer 21A. Equipment will be tested per WO 0000652, 9911794, 9911884.

Parts/Special Requirements:
QL Code... SR Comments...
QL Code... CQ Comments...
QL Code... Comments...

ISOLATION CROSS-REF

CRITICAL WORK

Prairie Island Nuclear Plant

9908015

U2 CORRECTIVE Work Order STANDARD Master

CRITICAL WORK

Need Date 04/20/00
WO Priority ..... 5 UNIT 2 OUTAGE
WO Description .. Isolate Bkrs 211A & 212A and XFMR 21A for PM

Crit Work. Y
System ... EB
Steps 1

Step Number	1 of 1	Attachments ... Y	References .. N	**Isolation ... Y**	
RWP Required ..... N		RWP Number .... NA		Isol Xref ... MASTER	
Confined Space .... N		CSUP Required . N		Planned By .. BTLT01	
Material Request...		**Inspection # ..**			
Safety Reqmt				Approved By . SCHM05	
Dept ..... TE		Crew 01	Shift	Trade ..... E	

Step Description .. Perform PM on Bkr 211A & 212A Relays and 21A XFMR
Step Instruction: Isolate Bkrs 211A, 212A and XFMR 21A for PM. Equipment will be inspected & tested per work orders 0000652, 9911794, and 9911884.

Work Order Attachments

Attachment	Comment
PROCEDURE	WORK INSTRUCTIONS 6 PAGES

PINGP 638 Rev 9
Isolation: 99-08015 Ver: 1

Isolation and Restoration

ISOLATION

Oid: 1233503

Title: ISOLATE BKRS 211A & 212A AND XFMR 21A FOR PM
Assoc. Work Doc:
Isolated For: M.S. JEFFREY CURTIS

Prepared by: BUTLER, TODD E (02/04/00 14:38)
Approved by: HEINEMAN, EDWARD W (02/29/00 14:29)
Reviewed by: HEINEMAN, EDWARD W (02/29/00 14:29)
Activated by: IRVIN, WAYNE J (04/23/00 18:08)

Isolation

Instructions:

Pre-Job Briefing Complete _____ Date: 4-24-00 4-24-00

[ ] CV Air Supply Tag(s)
[ ] Fire Protection Vlv Position Tag(s)
[ ] Fuse Plugs Installed

Isolation Completed & Computer Updated By: _____ Date: 4/24/00 4-24-00

Notes:

Restoration

Instructions:

[ ] Partial Restoration Attachment (PING 1072)
[ ] Temporary Restoration Attachment (PING 7471)
[X] Isolation Cross Reference

Cross-Ref WO's Released: _____ Date: 4-25-00

Isolation Released By: _____ Date: 4-28-00
(M.S. JEFFREY CURTIS)

SS Permission to Restore: _____ Date: 4-26-00

Pre-Job Briefing Complete _____ Date: 4-26-00

[ ] CV Air Supply Tag(s)
[ ] Fire Protection Vlv Position Tag(s)
[ ] Fuse Plugs Returned to Control Room

Restoration Completed & Computer Updated By: _____ Date: 4-26-00

Review: _____ (SS) Time: _____ Date: _____

Notes:

Tag No.	Tag Type	Equipment Id & Name	Normal Position	Isolated Position	IV	Hung by / Verified by	Removed by / Verified By	Returned Normal
1	HOLD	BKR 15-12	CONNECT	DISCONNECT	Y	Date 4-24-00 Time 2215	Date 4-26-00 Time 1100	Yes
		BUS 15 FEED TO 21A XFMR				Date 4-24-00 Time 2217	Date 4-26-00 Time 1130	No
		Bldg: Turbine Building/Old Admin, Floor: ELEVATION 715, Room: , Remarks: E.0/8.7 15 BUS ROOM						
		On For: M.S. JEFFREY CURTIS						

MASTER

Tag No.	Tag Type	Equipment Id & Name	Normal Position	Isolated Position	IV	Hung by / Verified by	Removed by / Verified By	Returned Normal
2	HOLD	BKR 211A BUS 211 SOURCE FROM 21A XFMR Bldg: D5/D6 Building, Floor: ELEVATION 735, Room: , Remarks: G.8/15.6 211 BUS ROOM On For: M.S. JEFFREY CURTIS	DISCONNECT	DISCONNECT	Y	Date 4-24-00 Time 0200 Date 4-24-00 Time 0202	Date 4-26-00 Time 1115 Date 4-26-00 Time 1130	Yes No
3	HOLD	BKR 212A BUS 212 SOURCE FROM 21A XFMR Bldg: D5/D6 Building, Floor: ELEVATION 735, Room: , Remarks: G.2/15.6 212 BUS ROOM On For: M.S. JEFFREY CURTIS	DISCONNECT	DISCONNECT	Y	Date 4-24-00 Time 0200 Date 4-24-00 Time 0202	Date 4-26-00 Time 1130 Date 4-26-00 Time 1145	Yes No
4	HOLD	FU/211A AD 211A XFMR PRI POT FUSE (CPT PRI) Bldg: D5/D6 Building, Floor: ELEVATION 735, Room: , Remarks: G.8/15.6 211 BUS ROOM On For: M.S. JEFFREY CURTIS	FUSE INSTALLED	FUSE REMOVED	N	Date 4-24-00 Time 0230	Date 4-26-00 Time 1205	Yes No
5	HOLD	GT 15-12 LOAD/GND GROUND TRUCK LOAD (LOWER) SIDE IN CUB 15-12 Bldg: Turbine Building/Old Admin, Floor: ELEVATION 715, Room: , Remarks: E.0/8.7 15 BUS ROOM On For: M.S. JEFFREY CURTIS	REMOVED	INSTALLED	N	Date 4-24-00 Time 0900	Date 4-24-00 Time 2100	Yes No
6	HOLD	GT 211A-A SRC/GND GROUND TRUCK SOURCE (LOWER) SIDE PH A IN CUB 211A Bldg: D5/D6 Building, Floor: ELEVATION 735, Room: , Remarks: G.8/15.6 211 BUS ROOM On For: M.S. JEFFREY CURTIS	DISCONNECT	INSTALLED	N	Date 4-24-00 Time 0930	Date 4-24-00 Time 2110	Yes No
7	HOLD	GT 211A-B SRC/GND GROUND TRUCK SOURCE (LOWER) SIDE PH B IN CUB 211A Bldg: D5/D6 Building, Floor: ELEVATION 735, Room: , Remarks: G.8/15.6 211 BUS ROOM On For: M.S. JEFFREY CURTIS	DISCONNECT	INSTALLED	N	Date 4-24-00 Time 0930	Date 4-24-00 Time 2105	Yes No
8	HOLD	GT 211A-C SRC/GND GROUND TRUCK SOURCE (LOWER) SIDE PH C IN CUB 211A Bldg: D5/D6 Building, Floor: ELEVATION 735, Room: , Remarks: G.8/15.6 211 BUS ROOM On For: M.S. JEFFREY CURTIS	DISCONNECT	INSTALLED	N	Date 4-24-00 Time 0930	Date 4-24-00 Time 2115	Yes No

MASTER

PINGP 927 Rev. 0

ISOLATION CROSS-REFERENCE

LOG NO. 9904015

PAGE 1 of _____

DOCUMENT NO.	WORK COMPLETED AND RELEASED BY	DATE	FOLLOW-UP REQUIREMENTS COMPLETE	DATE
9908560				
0000652	E	4-25-00		
9911794	E	4-24-00		

Form 17-5165

PINGP 1072, Rev. 1
PAGE 1 of 1
Retention: 2 Years

I+R 9908015 Log # 9908015

I&R PARTIAL RESTORATION
(IF I&R X-REF EXISTS - DO NOT USE THIS FORM)

DATE	CARD NO.	DEVICE NO.	RELEASED BY	SS	I&R UPDATED	CMPTR UPDATED
4-24-00	5	GT 15-12 LOAD/GND				
4-24-00	6	GT 211A-A SRC/GND				
4-24-00	7	GT 211A-B SRC/GND				
4-24-00	8	GT 211A-C SRC/GND				
4-24-00	9	211A BAR/GND				

COPY DISTRIBUTION: WHITE - CONTROL ROOM COPY, YELLOW/PINK - WORKER'S COPY

JOB PERFORMANCE MEASURE WORKSHEET

TASK TITLE: CONDUCT AN EMERGENCY PLANT EVACUATION

JPM NUMBER: 00-SRO-A.3 **REV.** 0

RELATED PRA INFORMATION (SEE PITC 2.3): None

TASK NUMBERS: SS 3440240303

K/A NUMBERS: 2.3.10

APPLICABLE METHOD OF TESTING:

Simulate Performance: [ ] Actual Performance: [x]

Evaluation Location: Turbine Building: [ ] Auxiliary Building: [ ]

Simulator: [x] Control Room: [ ]

Other: [ ]

Time for Completion: 10 Minutes Time Critical: **NO**

TASK APPLICABILITY: (Check all that apply) SRO: [x] RO: [ ] NLO: [ ]

PREPARED BY: Mark Jones **DATE:** 4/24/00

APPROVED BY: [signature] **DATE:** 5-8-00

Operator: _____ **(SRO / RO / NLO)**

Evaluator: _____

Date: _____

READ TO THE OPERATOR

I will explain the initial conditions, which step(s) to simulate or discuss, and provide initiating cues. When you complete the task successfully, the objective for this job performance measure will be satisfied.

INITIAL CONDITIONS:

- A Site Area Emergency has been declared on Unit 1 due to a large break LOCA.
- A plant evacuation has been recommended by the HP Supervisor.
- Even though it is during normal working hours, the TSC has not yet been declared operational.
- A HP has just faxed a radiation survey of the Auxiliary Building to the control room.

INITIATING CUES:

- As the Unit 2 SS, perform a plant evacuation per F3-9.

JPM PERFORMANCE INFORMATION

Required Materials: F3-25 reentry radiation survey map indicating > 100 mR/hr general area on Unit 1 695' elevation.

General References: F3-9

Task Standards: Plant evacuation directed to the North Warehouse with the exception of Auxiliary Building Operators who are directed to the OSC.

Start Time: _____

NOTE: When providing "Evaluator Cues" to the examinee, care must be exercised to avoid prompting the examinee. Typically cues are only provided when the examinee's actions warrant receiving the information (i.e. the examinee looks or asks for the indication).

NOTE: Critical steps are marked with an "X" below the performance step number. Failure to meet the standard for any critical step shall result in failure of this JPM.

Performance Step: **Critical X (S-1)**	Determine the wind direction and possible habitability problems at the onsite assembly areas. Choose either the North Warehouse or the Receiving Warehouse. • May use North Warehouse if wind is from 236° to 360° or 0° to 123°. • May use Receiving Warehouse if wind is from 123° to 360° or 0° to 34°
Standard:	ERCS used to obtain wind direction of 115° and North Warehouse determined to be the appropriate assembly area.
Performance:	**SATISFACTORY** _____ **UNSATISFACTORY** _____
Comments:	_____

Performance Step: **Critical X (S-2)**	If conditions are acceptable, inform the Control Room Operator of the designated Assembly Point and direct the Operator to sound the plant evacuation alarm.
Standard:	Control Room Operator directed to sound the evacuation alarm and make plant announcement directing evacuation to the North Warehouse.
Evaluator Note:	**The examinee may elect to sound the evacuation alarm and make the announcement his/her self. If he/she does, then the following action should be demonstrated:** • **Evacuation alarm sounded using control switch behind G panel in control room.** • **Announcement made over the PA system: ATTENTION ALL PLANT PERSONNEL. A PLANT EVACUATION HAS BEEN DECLARED. ALL EMERGENCY ORGANIZATION PERSONNEL REPORT TO AND REMAIN AT YOUR EMERGENCY DUTY STATIONS. ALL OTHER PERSONNEL SHALL EVACUATE TO THE NORTH WAREHOUSE.** • **Announcement repeated.**
Evaluator Cue:	**If directed as the RO, acknowledge direction, then report that, "the evacuation alarm has been sounded and announcement made to evacuate to the North Warehouse."**
Performance:	**SATISFACTORY** _____ **UNSATISFACTORY** _____
Comments:	_____

Performance Step: **Critical** _____	Implement F3-10, "Personnel Accountability." Personnel evacuation accountability should be completed within 30 minutes after evacuation plant page.
Standard:	Security notified to implement F3-10.
Evaluator Cue:	**When notified as Security, acknowledge direction, then report that, "F3-10 will be implemented."**
Performance:	**SATISFACTORY** _____ **UNSATISFACTORY** _____
Comments:	_____

Performance Step: **Critical** **X** **(S-3)**	Evacuate the Auxiliary Building Operators to the OSC if: • General area radiation levels exceed 100 mR/hr, or • Recommended by the Radiation Protection Group or the REC.
Standard:	Survey map reviewed and determination made to evacuate Auxiliary Building Operators to the OSC.
Evaluator Cue:	**When directed as Auxiliary Building Operators, acknowledge direction, then report that, "Auxiliary Building Operators will evacuate to the OSC."**
Performance:	**SATISFACTORY** _____ **UNSATISFACTORY** _____
Comments:	_____

Terminating Cues: **When the Auxiliary Building Operator have been directed to evacuate to the OSC, inform examinee that, "this JPM is complete."**

Stop Time: _____

SIMULATOR SETUP

Instructor Guide:

- Initialize the simulator to IC-10.
- Place the simulator in "RUN" and allow ERCS to initialize.
- Enter overrides for ERCS wind direction and R-3 and R-4 radiation monitors ***(Relative Order 0)***.
- Enter malfunctions to cause LBLOCA, 11 SI Pump trip, and Bus 15 lockout ***(Relative Order 1, Event Trigger 1)***.
- Perform actions of E-0.
- Place the simulator in "FREEZE".
- When the examinee has been given the Initial Conditions and Initiating Cues, place the simulator in "RUN".

SIMULATOR SETUP

Relative Order	System or Panel Drawing	TYPE	CODE	Severity or Value	Event Trigger	TIMING	DESCRIPTION
0		ERCS PT OVRD	CP-1Y4109A	115			Primary Met Tower 10 Meter Wind Direction A
0		ERCS PT OVRD	CP-1Y4110A	115			Primary Met Tower 10 Meter Wind Direction B
0		ERCS PT OVRD	CP-1Y4111A	115			Primary Met Tower 60 Meter Wind Direction A
0		ERCS PT OVRD	CP-1Y4112A	115			Primary Met Tower 60 Meter Wind Direction B
0		ERCS PT OVRD	CP-1Y4118A	115			Backup Met Tower 22 Meter Wind Direction
0		OVRD AO	AO-R03:M1	155			R-3 (Radio Chemistry Lab Area R) Meter
0		ERCS PT OVRD	CP-1R0003A	155			R-3 (Radio Chemistry Lab Area R) ERCS Point
0		OVRD AO	AO-R04:M1	253			R-4 (11/12/13 Charging Pump Area R) Meter
0		ERCS PT OVRD	CP-1R0004A	253			R-4 (11/12/13 Charging Pump Area R) ERCS Point
1	SIMRC02A	MALF	RC08A	100	1		LOCA - Cold Leg RCP Discharge (A Loop)
1	SIMSI02	MALF	SI04A		1		Safety Injection Pump #11 Trips
1	SIMED04	MALF	ED09F		1		Loss of 4160V Bus #16

TURNOVER SHEET

INITIAL CONDITIONS:

- A Site Area Emergency has been declared on Unit 1 due to a large break LOCA.
- A plant evacuation has been recommended by the HP Supervisor.
- Even though it is during normal working hours, the TSC has not yet been declared operational.
- A HP has just faxed a radiation survey of the Auxiliary Building to the control room.

INITIATING CUES:

- As the Unit 2 SS, perform a plant evacuation per F3-9.

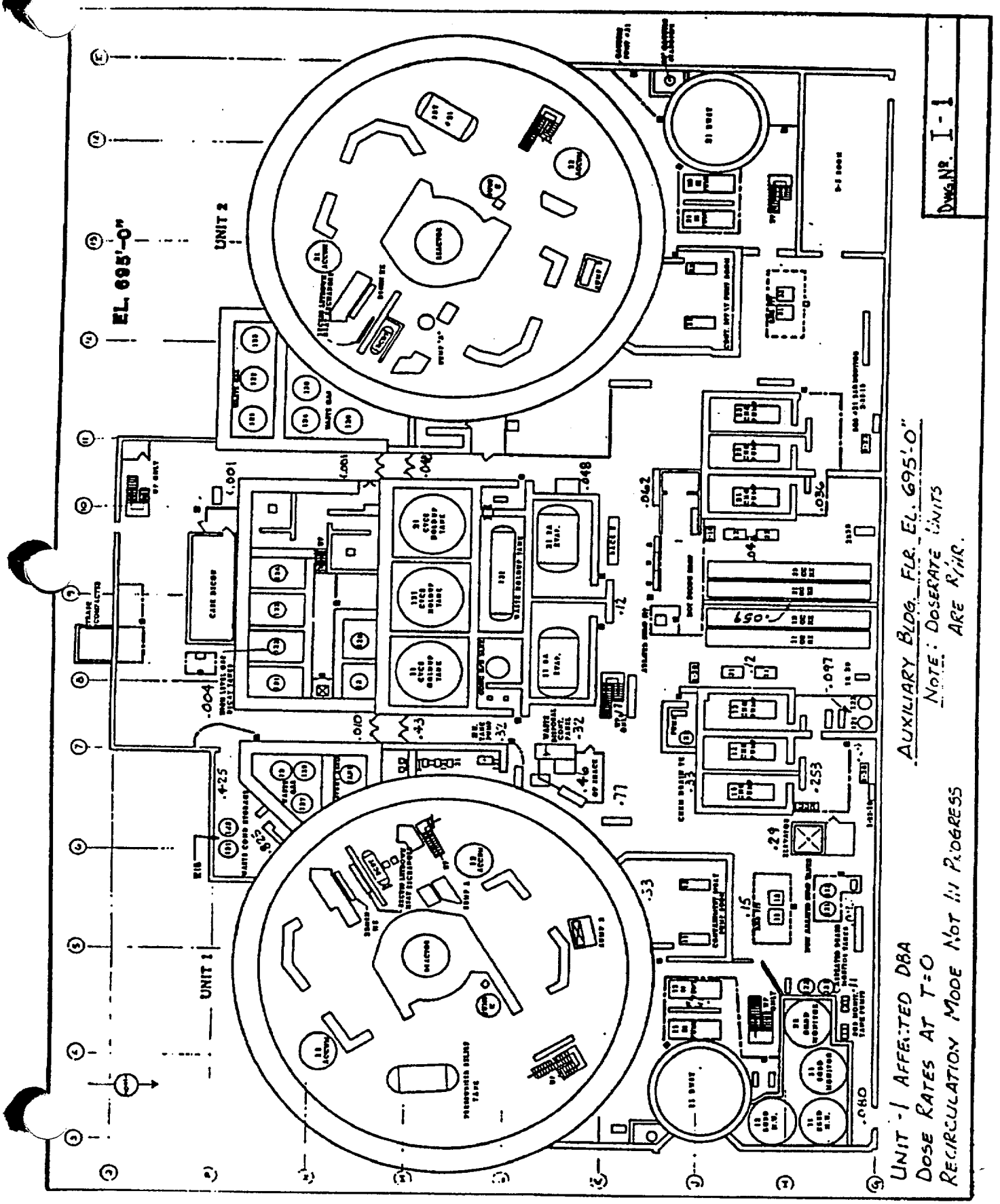
EL. 695'-0"
UNIT 2
UNIT 1
AUXILIARY BLDG. FLR. EL. 695'-0"
NOTE: DOSERATE UNITS ARE R/HR.
UNIT -1 AFFECTED DBA
DOSE RATES AT T=0
RECIRCULATION MODE NOT IN PROGRESS
DWG. NR. I-1

JOB PERFORMANCE MEASURE WORKSHEET

TASK TITLE: PERFORM INTERIM EMERGENCY DIRECTOR ACTIONS

JPM NUMBER: ADMIN-4S **REV.** 0

RELATED PRA INFORMATION (SEE PITC 2.3): None

TASK NUMBERS: SS 3440230303

K/A NUMBERS: 2.4.38

APPLICABLE METHOD OF TESTING:

Simulate Performance: [ ] Actual Performance: [x]

Evaluation Location: Turbine Building: [ ] Auxiliary Building: [ ]

Simulator: [x] Control Room: [ ]

Other: [ ]

Time for Completion: 10 Minutes Time Critical: **NO**

TASK APPLICABILITY: (Check all that apply) SRO: [x] RO: [ ] NLO: [ ]

PREPARED BY: Mark Jones **DATE:** 4/26/00

APPROVED BY: [signature] **DATE:** 5-8-00

Operator: _____ **(SRO / RO / NLO)**

Evaluator: _____

Date: _____

READ TO THE OPERATOR

I will explain the initial conditions, which step(s) to simulate or discuss, and provide initiating cues. When you complete the task successfully, the objective for this job performance measure will be satisfied.

INITIAL CONDITIONS:

- Unit 1 has experienced a loss of feedwater ATWS.
- The crew has just entered FR-H.1.
- The SEC has been summoned to the Control Room and has completed the Meteorological Data on PINGP 577.

INITIATING CUES:

- The SM/ED directs you as the Unit 2 SS to assume interim ED responsibilities, classify the event, and complete the PINGP 1125, "ED Checklist".

JPM PERFORMANCE INFORMATION

Required Materials: PINGP 577 with section 2.2 filled in as follows:

a. Wind Speed = 12 mph
b. Wind Direction (from) = 348°
c. Temperature = 61 °F
d. Precipitation = No
e. Stability Class = C circled
f. Affected Sectors = FGHJK.

General References: F3-2, F3-4, PINGP 1125, and PINGP 577

Task Standards: Event classified as a General Emergency, PING 1125 initiated, PINGP 577 completed and delivered to the SEC, and PA announcement made.

Start Time: _____

NOTE: When providing "Evaluator Cues" to the examinee, care must be exercised to avoid prompting the examinee. Typically cues are only provided when the examinee's actions warrant receiving the information (i.e. the examinee looks or asks for the indication).

NOTE: Critical steps are marked with an "X" below the performance step number. Failure to meet the standard for any critical step shall result in failure of this JPM.

Performance Step: **Critical X (S-1)**	Classify the event per F3-2.
Standard:	Event classified as a General Emergency under EAL Reference Manual Condition Number 7E or 20F.
Evaluator Note:	**It is expected that no more than 15 minutes will be required to classify the event, complete form PINGP 577, "Emergency Notification Report Form", and give the form to the SEC to complete notifications.**
Evaluator Cue:	**If asked as Unit 2, inform examinee that, "21 AFWP is OOS."**
Performance:	**SATISFACTORY** _____ **UNSATISFACTORY** _____
Comments:	_____

Performance Step: **Critical X (S-1)**	Fills in the time of event declaration at the top of PINGP 1125.
Standard:	Declaration time filled in.
Evaluator Note:	**Procedurally, once the classification of General Emergency has been made, F3-2 implements F3-4, which implements form PINGP 1125, " Shift Manager/Shift Supervisor Emergency Director Checklist", which implements form PINGP 577, "Emergency Notification Report Form". Examinee will probably implement forms PINGP 577 and PINGP 1125 without procedural reference.**
Performance:	**SATISFACTORY** _____ **UNSATISFACTORY** _____
Comments:	_____

Performance Step: **Critical X (S-1)**	Assume the role of Emergency Director (F3-4).
Standard:	Initials and writes in the time that the ED role was assumed.
Evaluator Cue:	**If asked when the ED role was assumed, inform examinee that, "the ED role was assumed 10 minutes before event declaration."**
Performance:	**SATISFACTORY** _____ **UNSATISFACTORY** _____
Comments:	_____

Performance Step: **Critical X (S-1)**	Ensure the SEC has been summoned and starts the completion of the notification report form (PINGP 577).
Standard:	Initials and writes in the time that the SEC was summoned.
Evaluator Cue:	**If asked when the SEC was summoned, inform examinee that, "the SEC was summoned to the control room 5 minutes before event declaration."**
Performance:	**SATISFACTORY** _____ **UNSATISFACTORY** _____
Comments:	_____

Performance Step: **Critical X (S-2)**	Recommend evacuation for the general public on PINGP 577 as designate in Figure 1, F3-8.1. • If wind ≥ 5 mph, then evacuate a 2 mile radius and 5 miles downwind and monitor radio/TV.
Standard:	Since wind speed is 12 mph, fills in protective action recommendation for evacuation of all sectors out to 2 miles, FGHJK sectors out to 5 miles, and circles subareas 5E and 5S.
Performance:	**SATISFACTORY** _____ **UNSATISFACTORY** _____
Comments:	_____

Performance Step: **Critical X (S-3)**	Review and approve the notification report form PINGP 577.
Standard:	PINGP 577 completed and signed for approval as follows: • 1.1 (b) checked. • 1.2 (a) and (d) checked, time and date filled in. • 1.3 (a) checked. • 1.4 (a) filled in by previous step. • 2.1 indicates event related to Unit 1, EAL is 7E or 20F, and appropriate EAL sticker affixed. • 2.2 previously filled in by SEC, as given in JPM Initial Conditions. • 2.3 signed by examinee as interim ED.
Performance:	**SATISFACTORY** _____ **UNSATISFACTORY** _____
Comments:	_____

Performance Step: **Critical X (S-4)**	Direct the SEC to complete the notifications of state and local agencies and, if not already performed, activate the NSP Emergency Response Organization in accordance with F3-5 and PINGP 580.
Standard:	PINGP 577 given to the SEC with the direction to complete notifications of state and local agencies within 15 minutes of event declaration and to activate the NSP Emergency Response Organization in accordance with F3-5 and PINGP 580.
Evaluator Cue:	**When examinee indicates that he/she would give the PINGP 577 to the SEC with direction for notifications, acknowledge as the SEC, then inform examinee that, "notifications will be made within 15 minutes of event declaration and the NSP Emergency Response Organization will be activated."**
Performance:	**SATISFACTORY** _____ **UNSATISFACTORY** _____
Comments:	_____

Performance Step: **Critical X (S-5)**	Announce the emergency class over PA System: ATTENTION ALL PLANT PERSONNEL: A GENERAL EMERGENCY HAS BEEN DECLARED BASED ON (brief description of event). ALL MEMBERS OF THE EMERGENCY RESPONSE ORGANIZATION REPORT TO YOUR EMERGENCY DUTY STATIONS OR EMERGENCY CENTER. ALL OTHER PERSONNEL STANDBY FOR FURTHER INSTRUCTIONS. Repeat announcement.
Standard:	Announcement made and repeated.
Evaluator Cue:	**When examinee indicates that he/she would make the announcement and repeat it, inform examinee that, "the announcement has been made and repeated."**
Performance:	**SATISFACTORY** _____ **UNSATISFACTORY** _____
Comments:	_____

Terminating Cues: **When announcement has been made, inform examinee that, "this JPM is complete."**

Stop Time: _____

SIMULATOR SETUP

Instructor Guide:

- Initialize the simulator to IC-10.
- Place the simulator in "RUN" and allow ERCS to initialize.
- Place the DSS control switch in "PULLOUT".
- Enter malfunction to prevent automatic Reactor trip ***(Relative Order 0)***.
- Enter malfunctions to cause Loss of Feedwater ATWS with inability to Feed and Bleed ***(Relative Order 1, Event Trigger 1)***.
- When SG WR level decreases to < 7%, perform the following:
  - Momentarily place the DSS control switch in "ACTUATE" and then allow to spring return to "AUTO".
  - Delete malfunction to prevent automatic Reactor trip ***(Relative Order 2)***.

SIMULATOR SETUP

Relative Order	System or Panel Drawing	TYPE	CODE	Severity or Value	Event Trigger	TIMING	DESCRIPTION
0	SIMRP01	MALF	RP07				Mechanical Failure of Reactor Trip Breakers
1	SIMED04	MALF	ED09F		1		Loss of 4160V Bus #16
1	SIMFW08	MALF	FW33		1		Auxiliary Feedwater Pump Trip, Turbine
1	SIMSI02	MALF	SI04A		1		Safety Injection Pump #11 Trips
1	SIMMS01B	MALF	TC02A		1		Turbine Stop Valve CV-31182 Fails Closed
1	SIMRP02	MALF	RP04A		1		Safety Injection Train A Actuation
2	SIMRP01	MALF	RP07	DELETE			Mechanical Failure of Reactor Trip Breakers

TURNOVER SHEET

INITIAL CONDITIONS:

- Unit 1 has experienced a loss of feedwater ATWS.
- The crew has just entered FR-H.1.
- The SEC has been summoned to the Control Room and has completed the Meteorological Data on PINGP 577.

INITIATING CUES:

- The SM/ED directs you as the Unit 2 SS to assume interim ED responsibilities, classify the event, and complete the PINGP 1125, "ED Checklist".

KEY

EMERGENCY NOTIFICATION REPORT FORM

INSTRUCTIONS

1. Complete all sections of this form for Alert, S.A., or General Emergency and NUEs involving a hazardous release; otherwise, Section 2.2 (Met Info) is not necessary.
2. Use Table 1 on Back of Page 2 to determine geopolitical subareas.
3. Notify State/Local authorities within 15 minutes, with information contained on Pages 1 and 2.
4. Fax only Page 1 and Page 2 Front to State/Local authorities.

1.1 PLANT IDENTIFICATION

This is _____, **Emergency Communicator at the Prairie Island Nuclear Generating Plant.** (651-388-1121)

_____ (a) This is a Real Emergency.

__✓__ (b) This is a Drill.

1.2 EVENT CLASSIFICATION

We have

__✓__ (a) Declared a(an)
- _____ (a) Notification of Unusual Event
- _____ (b) Alert
- _____ (c) Site Area Emergency
- __✓__ (d) General Emergency
- _____ (e) and entered the Recovery Phase

_____ (b) Escalated to a(an)

_____ (c) No classification change, PAR update only

_____ (d) Terminated the

At 1215 **hours on** 4-22-00 **(date).**

1.3 RELEASE INFORMATION (Report a radioactive release if any RCS activity or Rad Waste System activity is released to the environment during an emergency.)

The emergency

__✓__ (a) **DOES NOT** involve a radioactive release.

_____ (b) **DOES** involve a _____ radioactive release.
liquid/airborne

1.4 PROTECTIVE ACTION RECOMMENDATION

The protective action recommended at the time is:

__✓__ (a) Evacuate ALL sectors out to 2 miles

EGHJK sectors out to 5 miles

(circle) SUBAREAS (2) 5N (5E) (5S) 5W 10NW 10N 10NE 10E 10SE 10SW 10W

Advise remainder of plume EPZ to monitor radio/TV broadcasts for further emergency information.

_____ (b) None

EMERGENCY NOTIFICATION REPORT FORM

2.1 EVENT DESCRIPTION (Use the generic Initiating

The initiating event causing the emergency is:

Transient initiated by loss of feedwater and condensate systems (principal heat removal system) followed by failure of emergency feedwater system for extended period. Core melting possible in several hours. Ultimate failure of containment likely if core melts.

(EAL Ref Manual 7E)

The EAL Reference Manual Condition Number is 7E.

This event is related to: (X) Unit 1 ( ) Unit 2 ( ) Both Units

2.2 METEOROLOGICAL INFORMATION (Complete this section for an Alert, S.A. or General Emergency and an NUE involving a hazardous release; otherwise NA may be indicated. Use the 10 meter 15 minutes average met data, from the 10a sensor if reliable, otherwise use 10b, 60a, 60b, or 22 meter tower. Use 60a for stability class, otherwise use 60b. If met not available via MIDAS, access met via ERCS per F3-13.5.)

Present Meteorological data is:

a. **Wind Speed** 12 **mph**

b. **Wind direction (from)** 348 °

c. **Temperature** 61 °F

d. **Precipitation** NO

e. **Stability Class:** A B (C) D E F G
(Circle One)
unstable ⇐ ⇒ stable

f. **Affected sectors** FGHJK

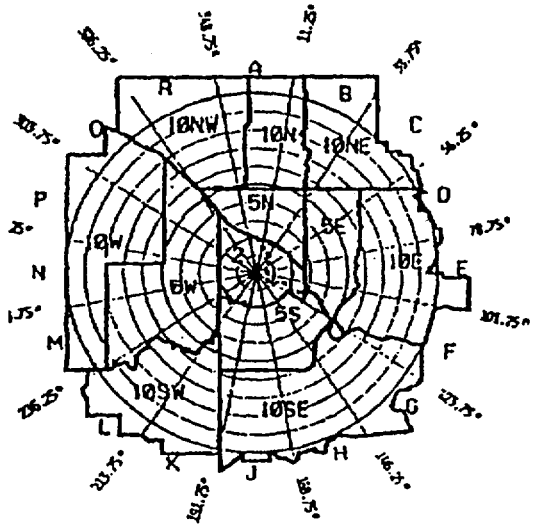

2.3 PLEASE RELAY THIS INFORMATION TO YOUR EMERGENCY ORGANIZATION PERSONNEL.

NOTE:	ED/EM should ensure date & time are correct in Section 1.2.

EMERGENCY DIRECTOR/MANAGER APPROVAL _____ NAME

For NUE Routing Only _____ Supt. Radiation Protection and Chemistry

EMERGENCY NOTIFICATION REPORT FORM

NOTE:	**DO NOT FAX THIS PAGE TO STATE AND LOCAL AUTHORITIES**

TABLE 1

SELECTING GEOPOLITICAL SUBAREAS

Choose geopolitical subareas corresponding to the current wind direction (or affected downwind sectors) and the desired downwind distance one needs to apply the Protective Action Recommendations.

	AFFECTED DOWNWIND SECTORS	AFFECTED GEOPOLITICAL SUBAREAS		
		2 MILES	5 MILES	10 MILES
IF WIND < 5 MPH OR FROM 22 M MET TOWER	ALL	2	5N, 5E, 5S, 5W	10NW, 10N, 10NE, 10E, 10SE, 10SW, 10W

FOR WIND ≥ 5 MPH, WIND FROM (DEGREES)	AFFECTED DOWNWIND SECTORS	AFFECTED GEOPOLITICAL SUBAREAS		
		2 MILES	5 MILES	10 MILES
348.75 - 11.25	GHJKL	2	5S, 5W	10SE, 10SW
11.25 - 33.75	HJKLM	2	5S, 5W	10SE, 10SW, 10W
33.75 - 56.25	JKLMN	2	5S, 5W	10SE, 10SW, 10W
56.25 - 78.75	KLMNP	2	5S, 5W	10SW, 10W
78.75 - 101.25	LMNPQ	2	5W	10SW, 10W
101.25 - 123.75	MNPQR	2	5W, 5N	10W, 10NW
123.75 - 146.25	NPQRA	2	5W, 5N	10W, 10NW, 10N
146.25 - 168.75	PQRAB	2	5W, 5N	10W, 10NW, 10N, 10NE
168.75 - 191.25	QRABC	2	5W, 5N, 5E	10W, 10WN, 10N, 10NE
191.25 - 213.75	RABCD	2	5N, 5E	10NW, 10N, 10NE, 10E
213.75 - 236.25	ABCDE	2	5N, 5E	10NW, 10N, 10NE, 10E
236.25 - 258.75	BCDEF	2	5N, 5E	10N, 10NE, 10E
258.75 - 281.25	CDEFG	2	5N, 5E, 5S	10NE, 10E, 10SE
281.25 - 303.75	DEFGH	2	5N, 5E, 5S	10E, 10SE
303.75 - 326.25	EFGHJ	2	5E, 5S	10E, 10SE
326.25 - 348.75	FGHJK	2	5E, 5S	10E, 10SE, 10SW

FINAL AS-ADMINISTERED WALKTHROUGH JPMS

FOR THE PRAIRIE ISLAND INITIAL EXAMINATION THE WEEK OF MAY 15, 2000

Facility: Prairie Island Date of Examination: 5/15/00
Exam Level (circle one): ~~RO / SRO(I) /~~ SRO(U) Operating Test No.: A

B.1 Control Room Systems

System / JPM Title	Type Code*	Safety Function
a. CRDS/New-01 Control Rod Exercise with Stuck Rod JPM # 00-SRO-S.1	MAS	1
b. ECCS/New-02 Raise #11 Accumulator Level JPM # 00-SRO-S.2	MAS	3
c. AFW/AF-3/2 Cross-connecting 21 MD AFW Pump to Unit 1 (PRA sig. Operator action)	DLC	4
d.		
e.		
f.		
g.		

B.2 Facility Walk-Through

a. CVCS/RC-8 Perform RCP Isolation Following Loss of All AC Power	DLR	2
b. HRPS/HC-1 Start Up Containment Hydrogen Recombiner	DLR	5
c.		

* Type Codes: (D)irect from bank, (M)odified from bank, (N)ew, (A)lternate path, (C)ontrol room, (S)imulator, (L)ow-Power, (R)CA

JOB PERFORMANCE MEASURE WORKSHEET

TASK TITLE: RAISE 11 ACCUMULATOR LEVEL

JPM NUMBER: 00-SRO-S.2 **REV.** 0

RELATED PRA INFORMATION (SEE PITC 2.3): None

TASK NUMBERS: CRO 006.ATI.04 / CRO 0060050101

K/A NUMBERS: 2.1.23 / 006A113

APPLICABLE METHOD OF TESTING:

Simulate Performance: [ ] Actual Performance: [x]

Evaluation Location: Turbine Building: [ ] Auxiliary Building: [ ]

Simulator: [x] Control Room: [ ]

Other: [ ]

Time for Completion: 10 Minutes Time Critical: **NO**

TASK APPLICABILITY: (Check all that apply) SRO: [x] RO: [x] NLO: [ ]

PREPARED BY: Mark Jones **DATE:** 4/26/00

APPROVED BY: 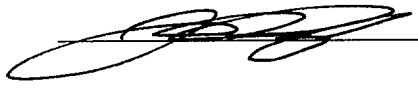 **DATE:** 5-8-00

Operator: _____ **(SRO / RO / NLO)**

Evaluator: _____

Date: _____

READ TO THE OPERATOR

I will explain the initial conditions, which step(s) to simulate or discuss, and provide initiating cues. When you complete the task successfully, the objective for this job performance measure will be satisfied.

INITIAL CONDITIONS:

- A slow leak has been diagnosed in 11 accumulator sample line.
- 11 accumulator level has decreased to the low level alarm.
- 11 SI pump has been prelubricated and an operator is standing by to perform local checks.

INITIATING CUES:

- The SS directs you to restore 11 accumulator level to normal per 1C18, section 5.4.

JPM PERFORMANCE INFORMATION

Required Materials: None

General References: 1C18

Task Standards: 11 accumulator level restoration to normal operating band initiated and then terminated upon receipt of SI such that the accumulator remains operable.

Start Time: _____

NOTE: When providing "Evaluator Cues" to the examinee, care must be exercised to avoid prompting the examinee. Typically cues are only provided when the examinee's actions warrant receiving the information (i.e. the examinee looks or asks for the indication).

NOTE: Critical steps are marked with an "X" below the performance step number. Failure to meet the standard for any critical step shall result in failure of this JPM.

Performance Step: **Critical** _____	Verify SI-15-3, 11 SI PUMP TO TEST LINE is OPEN.
Standard:	Outplant operator dispatched to verify SI-15-3 is OPEN.
Evaluator Note:	**SI-15-3 is the valve that should be verified per initial conditions of this JPM, which states that 11 SI pump is going to be used.**
Evaluator Cue:	**When directed, acknowledge, then report that, "SI-15-3 is open."**
Performance:	**SATISFACTORY** _____ **UNSATISFACTORY** _____
Comments:	_____

Performance Step: **Critical** _____	Verify MV-32202, SIT TEST LINE TO RWST, is OPEN.
Standard:	Verifies CS-46204 red light is on and green light is off.
Evaluator Cue:	**If requested as Outplant Operator, acknowledge, then report that, "MV-32202 is open."**
Performance:	**SATISFACTORY** _____ **UNSATISFACTORY** _____
Comments:	_____

Performance Step: **Critical** _____	Verify MV-32203, SIT TEST LINE TO RWST, is OPEN.
Standard:	Verifies CS-46205 red light is on and green light is off.
Evaluator Cue:	**If requested as Outplant Operator, acknowledge, then report that, "MV-32203 is open."**
Performance:	**SATISFACTORY** _____ **UNSATISFACTORY** _____
Comments:	_____

Performance Step: **Critical** _____	Log entry into LCO for Unit 1 BAST per T.S. 3.2.C.2.
Standard:	SS notified of LCO entry requirement.
Evaluator Cue:	**When notified, acknowledge, then report that, "the LCO will logged."**
Performance:	**SATISFACTORY** _____ **UNSATISFACTORY** _____
Comments:	_____

Performance Step: **Critical X (S-1)**	Open one of the RWST header isolation valves to the SI pumps: MV-32079, RWST TO SI PUMPS, using CS-46195 MV-32080, RWST TO SI PUMPS, using CS-46196
Standard:	Either MV-32079 or MV-32080 opened using CS-46195 or CS-46196 respectively; red light on, green light off.
Performance:	**SATISFACTORY** _____ **UNSATISFACTORY** _____
Comments:	_____

Performance Step: **Critical X (S-2)**	Start the desired SI pump and record the time: CS-46178, 11 SI PUMP.
Standard:	11 SI pump started using CS-46178; red light on, green light off.
Performance:	**SATISFACTORY** _____ **UNSATISFACTORY** _____
Comments:	_____

Performance Step: **Critical** _____	Locally observe proper SI pump operation: Bearing lubrication (slinger rings) Return oil flow indication Oil pressure indication.
Standard:	Outplant operator directed to perform local pump checks.
Evaluator Cue:	**When directed, acknowledge, then report that, "the local checks per step 5.4.7 are complete and satisfactory."**
Performance:	**SATISFACTORY** _____ **UNSATISFACTORY** _____
Comments:	_____

Performance Step: **Critical X (S-3)**	Under administrative control, OPEN the desired accumulator make-up isolation valve: CV-31442, 11 ACCUM M-U, using CS-46217.
Standard:	CV-31442 OPENED using CS-46217; red light on, green light off.
Evaluator Note:	**CV-31442 is opened under the administrative control of an operator designated to have the responsibility for closing the valve within one minute following an accident.**
Evaluator Cue:	**If asked, inform examinee that, "you (the examinee) are the designated operator for opening valves under administrative control."**
Performance:	**SATISFACTORY** _____ **UNSATISFACTORY** _____
Comments:	_____

Performance Step: **Critical X (S-4)**	When accumulator level reaches 56%, then CLOSE the accumulator make-up isolation valve: CV-31442, 11 ACCUM M-U, using CS-46217.
Standard:	When SI actuates and prior to accumulator level exceeding 91.9% or accumulator pressure exceeding 770 psig, CV-31442 is CLOSED using CS-46217; green light on, red light off.
Evaluator Note:	• **SI will be actuated due to a Steam Line Break on Loop A inside containment, which will occur simultaneous with the opening of CV-31442.** • **Accumulator level exceeding 91.9% or accumulator pressure exceeding 770 psig makes the accumulator inoperable.**
Performance:	**SATISFACTORY** _____ **UNSATISFACTORY** _____
Comments:	_____

Terminating Cues: **When CV-31442 is closed, inform examinee that, "this JPM is complete."**

Stop Time: _____

SIMULATOR SETUP

Instructor Guide:

- Initialize the simulator to IC-10.
- Place the simulator in "RUN" and allow ERCS to initialize.
- Drain 11 accumulator per 1C18, section 5.1, until the low level alarm is received.
- During JPM performance, when CV-31442 is opened, then enter malfunction to cause a Steam Line Break on Loop A inside containment ***(Relative Order 1, Event Trigger 1)***.

SIMULATOR SETUP

Relative Order	System or Panel Drawing	TYPE	CODE	Severity or Value	Event Trigger	TIMING	DESCRIPTION
R1	SIMMS01A	MALF	MS01A	100	1		MS Line #11 Rupture Inside Containment

TURNOVER SHEET

INITIAL CONDITIONS:

- A slow leak has been diagnosed in 11 accumulator sample line.
- 11 accumulator level has decreased to the low level alarm.
- 11 SI pump has been prelubricated and an operator is standing by to perform local checks.

INITIATING CUES:

- The SS directs you to restore 11 accumulator level to normal per 1C18, section 5.4.

JOB PERFORMANCE MEASURE WORKSHEET

TASK TITLE: CONTROL ROD EXERCISE WITH STUCK ROD

JPM NUMBER: 00-SRO-S.1 **REV.** 0

RELATED PRA INFORMATION (SEE PITC 2.3): None

TASK NUMBERS: CRO 0010010201

K/A NUMBERS: 2.1.23 / 001A203

APPLICABLE METHOD OF TESTING:

Simulate Performance: [ ] Actual Performance: [x]

Evaluation Location: Turbine Building: [ ] Auxiliary Building: [ ]

Simulator: [x] Control Room: [ ]

Other: [ ]

Time for Completion: 20 Minutes Time Critical: **NO**

TASK APPLICABILITY: (Check all that apply) SRO: [x] RO: [x] NLO: [ ]

PREPARED BY: Mark Jones **DATE:** 4/26/00

APPROVED BY: 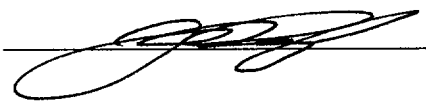 **DATE:** 5-8-00

Operator: _____ **(SRO / RO / NLO)**

Evaluator: _____

Date: _____

READ TO THE OPERATOR

I will explain the initial conditions, which step(s) to simulate or discuss, and provide initiating cues. When you complete the task successfully, the objective for this job performance measure will be satisfied.

INITIAL CONDITIONS:

- SP 1047, "Control Rod Quarterly Exercise", is required to be performed as post maintenance testing for Shutdown Bank A.
- A pre-job brief has been conducted during which Reactivity Management was discussed with permission being given to perform the reactivity manipulations necessary for SP 1047 and direction given to report any reactivity abnormalities.

INITIATING CUES:

- The SS directs you to perform applicable portions of SP 1047, "Control Rod Quarterly Exercise" for Shutdown Bank A only, beginning at step 7.2.1.
- You do not have to announce reactivity manipulations that are directed by SP 1047.
- Any reactivity anomalies or manipulations that are not a result of SP 1047 direction **SHALL** be reported to the SS.

JPM PERFORMANCE INFORMATION

Required Materials: **Copy of SP 1047 with steps completed through 7.1 and Table 1 marked N/A for all rod groups except Shutdown Bank A.**

General References: **SP 1047 and C5**

Task Standards: **SP 1047 surveillance initiated, then discontinued when determination of stuck rod made.**

Start Time: _____

NOTE: When providing "Evaluator Cues" to the examinee, care must be exercised to avoid prompting the examinee. Typically cues are only provided when the examinee's actions warrant receiving the information (i.e. the examinee looks or asks for the indication).

NOTE: Critical steps are marked with an "X" below the performance step number. Failure to meet the standard for any critical step shall result in failure of this JPM.

Performance Step: **Critical** _____	Obtain the key for the Unit 1 Lift Coil Disconnect Switch Cabinet from the Shift Supervisor.
Standard:	Obtains key #112.
Evaluator Note:	**On the simulator, this key is in the instructor's booth.**
Evaluator Cue:	**When examinee requests key #112, provide it to them.**
Performance:	**SATISFACTORY** _____ **UNSATISFACTORY** _____
Comments:	_____

Performance Step: At any convenient ERCS terminal, use the ERCS Group Display "SP 1047" to display the following parameters for the duration of the test:
Critical _____

1Y0701D	ROD CTRL POWER CAB 1AC
1Y0702D	ROD CTRL POWER CAB 2AC
1Y0703D	ROD CTRL POWER CAB 1BD
1Y0704D	ROD CONTROL SYSTEM (LOGIC)

Standard: ERCS display group SP 1047 displayed on an available ERCS terminal.

Performance: **SATISFACTORY** _____ **UNSATISFACTORY** _____

Comments: _____

Performance Step: Place CS-46280, ROD BANK SEL SW, in "MANUAL".
Critical _____

Standard: CS-46280 placed in MANUAL.

Performance: **SATISFACTORY** _____ **UNSATISFACTORY** _____

Comments: _____

Performance Step: Record each Group Position and RPI Position in the Initial Steps Column of Table 1.
Critical _____

Standard: Each group position and RPI position recorded in the initial steps column of Table 1.

Performance: **SATISFACTORY** _____ **UNSATISFACTORY** _____

Comments: _____

Performance Step: **Critical X (S-1)**	Place CS-46280, ROD BANK SEL, to the Bank to be exercised.
Standard:	CS-46280 placed to the SDA position for Shutdown Bank A.
Evaluator Note:	**Rods should be exercised in the order listed in Table 1.**
Performance:	**SATISFACTORY** _____ **UNSATISFACTORY** _____
Comments:	_____

Performance Step: **Critical X (S-1)**	OPEN all of the lift coil disconnect switches for the bank being exercised EXCEPT for the control rod to be exercised in that bank.
Standard:	Cabinet opened, disconnect switches for rods I11, C9, and K5 OPENED, all other switches left closed.
Performance:	**SATISFACTORY** _____ **UNSATISFACTORY** _____
Comments:	_____

Performance Step: **Critical __X__ (S-2)**	Insert the selected control rod 12 ± 1 steps based on the group step counter indication.
Standard:	SDA rod E-3 inserted to 215 to 217 steps.
Evaluator Note:	**An urgent failure alarm and rod deviation/sequencing alarm will be generated. These are expected alarms in this configuration.**
Evaluator Cue:	**If examinee reports the reactivity insertion, acknowledge the report, and remind the examinee that per the pre-job brief, "reactivity manipulations directed by the SP do not have to be reported."**
Performance:	**SATISFACTORY** _____ **UNSATISFACTORY** _____
Comments:	_____

Performance Step: **Critical** _____	Record the group step counter value for the bank and individual rod position indicator for the control rod in the Interim Steps Column of Table 1.
Standard:	Group position and RPI position recorded in the interim steps column of Table 1.
Performance:	**SATISFACTORY** _____ **UNSATISFACTORY** _____
Comments:	_____

Performance Step: **Critical** _____	For each control rod moved, verify ERCS Display "SP 1047" agrees with Table 3. Initial the Table 3 Alarm Check Column of Table 1.
Standard:	ERCS Display SP 1047 agreement with Table 3 verified and initialed in the Table 3 Alarm Check Column of Table 1.
Performance:	**SATISFACTORY** _____ **UNSATISFACTORY** _____
Comments:	_____

Performance Step: **Critical X (S-3)**	Withdraw the control rod to its original position as indicated by its group counter.
Standard:	SDA rod E-3 withdrawn to 228 steps or stuck rod is detected and withdrawal stopped.
Evaluator Note:	**Attempting withdrawal of the rod is critical, not 228 steps, since the examinee may stop withdrawal once the rod is determined to be stuck.**
Performance:	**SATISFACTORY** _____ **UNSATISFACTORY** _____
Comments:	_____

Performance Step: **Critical** _____	Record the group step counter and individual rod position indicator values in the Final Steps Column of Table 1.
Standard:	Group position and RPI position recorded in the final steps column of Table 1.
Evaluator Note:	**It is not necessary to complete this step, if examinee recognizes the stuck rod and discontinues the SP.**
Performance:	**SATISFACTORY** _____ **UNSATISFACTORY** _____
Comments:	_____

Performance Step: **Critical** _____	Verify initial and final group step counter positions agree.
Standard:	Initial and final group positions verified to be 228 steps.
Evaluator Note:	**It is not necessary to complete this step, if examinee recognizes the stuck rod and discontinues the SP.**
Performance:	**SATISFACTORY** _____ **UNSATISFACTORY** _____
Comments:	_____

Performance Step: **Critical** **X** **(S-4)**	Verify control rod motion by RPI, Tave, and/or power changes. Initial Rod Motion column of Table 1.
Standard:	Stuck SDA rod E-3 identified and rod motion column is not initialed.
Evaluator Note:	**If stuck rod is not identified, then continue with JPM performance until the lift coil disconnect switches are aligned for testing the next rod in the bank.**
Evaluator Cue:	• **If examinee reports that SDA rod E-3 is stuck, acknowledge report, then direct the examinee to, "perform the actions required as a result of the stuck rod?"** • **If examinee does not identify stuck rod and aligns lift coil disconnect switches for testing the next rod in the bank, inform examinee that, "this JPM is complete."**
Performance:	**SATISFACTORY** _____ **UNSATISFACTORY** _____
Comments:	_____

Performance Step: **Critical __X__ (S-5)**	If any control rod does not move as required, then: • Discontinue the surveillance and return rod control to normal. • Apply T.S. 3.10.G.6. • Notify the System Engineer. • Issue a WO.
Standard:	Refers to procedure section 1.2, "Acceptance Criteria", recognizes that the following actions are to be performed for the stuck rod, and reports these actions to the SS: • Discontinue the surveillance and return rod control to normal. • Apply T.S. 3.10.G.6. • Notify the System Engineer. • Issue a WO.
Evaluator Cue:	When reported to as SS, acknowledge report and inform examinee that, "system engineer support will be requested to help with guidance for restoring rod control to normal." If examinee does not report all actions, ask examinee, "are there any other actions to be performed?"
Performance:	**SATISFACTORY** _____ **UNSATISFACTORY** _____
Comments:	_____

Terminating Cues: **When the SS has acknowledged the actions that have to be performed for the stuck rod, inform examinee that, "this JPM is complete."**

Stop Time: _____

SIMULATOR SETUP

Instructor Guide:

- Initialize the simulator to IC-10.
- Place the simulator in "RUN" and allow ERCS to initialize.
- During performance of the JPM, after SDA rod E-3 is inserted to 216 steps, enter malfunction to fail rod to move ***(Relative Order 1)***.

SIMULATOR SETUP

Relative Order	System or Panel Drawing	TYPE	CODE	Severity or Value	Event Trigger	TIMING	DESCRIPTION
1	SIMRD02	MALF	RD0522		1		Control Rod Misalignment E-3-SBA GR1

TURNOVER SHEET

INITIAL CONDITIONS:

- SP 1047, "Control Rod Quarterly Exercise", is required to be performed as post maintenance testing for Shutdown Bank A.
- A pre-job brief has been conducted during which Reactivity Management was discussed with permission being given to perform the reactivity manipulations necessary for SP 1047 and direction given to report any reactivity abnormalities.

INITIATING CUES:

- The SS directs you to perform applicable portions of SP 1047, "Control Rod Quarterly Exercise" for Shutdown Bank A only, beginning at step 7.2.1.
- You do not have to announce reactivity manipulations that are directed by SP 1047.
- Any reactivity anomalies or manipulations that are not a result of SP 1047 direction **SHALL** be reported to the SS.

JOB PERFORMANCE MEASURE WORKSHEET

TASK TITLE: START UP CONTAINMENT HYDROGEN RECOMBINER

JPM NUMBER: HC-1 **REV.** 9

RELATED PRA INFORMATION (SEE PITC 2.3): None

TASK NUMBERS: NLO 0280020104

K/A NUMBERS: 2.1.23 / 028A401

APPLICABLE METHOD OF TESTING:

Simulate Performance: [x] Actual Performance: [ ]

Evaluation Location: Turbine Building: [ ] Auxiliary Building: [x]

Simulator: [ ] Control Room: [ ]

Other: [ ]

Time for Completion: 13 Minutes Time Critical: **NO**

TASK APPLICABILITY: (Check all that apply) SRO: [x] RO: [x] NLO: [x]

PREPARED BY: Mark Jones **DATE:** 4/27/00

APPROVED BY: _____ **DATE:** 5-8-00

Operator: _____ **(SRO / RO / NLO)**

Evaluator: _____

Date: _____

READ TO THE OPERATOR

I will explain the initial conditions, which step(s) to simulate or discuss, and provide initiating cues. When you complete the task successfully, the objective for this job performance measure will be satisfied.

INITIAL CONDITIONS:

- A LOCA has occurred on Unit 1.
- Containment H_2 concentration is 2%.
- Adequate power is available to supply the recombiners.

INITIATING CUES:

- The SS directs you to start up 11 Containment Hydrogen Recombiner per C19.8, beginning at step 5.1.2.

JPM PERFORMANCE INFORMATION

Required Materials: Calculator

General References: C19.8

Task Standards: 11 Hydrogen Recombiner in service at the required power setting.

Start Time: _____

NOTE: When providing "Evaluator Cues" to the examinee, care must be exercised to avoid prompting the examinee. Typically cues are only provided when the examinee's actions warrant receiving the information (i.e. the examinee looks or asks for the indication).

NOTE: Critical steps are marked with an "X" below the performance step number. Failure to meet the standard for any critical step shall result in failure of this JPM.

Performance Step: **Critical** _____	At the recombiner panel, verify the PWR ADJ potentiometer is set to zero.
Standard:	PWR ADJ potentiometer set to zero.
Evaluator Cue:	**When examinee indicates that he/she would check the PWR ADJ potentiometer setting, inform examinee that, "it reads zero."**
Performance:	**SATISFACTORY** _____ **UNSATISFACTORY** _____
Comments:	_____

Performance Step: **Critical** _____	At the recombiner panel, verify the PWR IN AVAIL lamp is lit.
Standard:	PWR IN AVAIL lamp is lit.
Evaluator Cue:	**When examinee indicates that he/she would check the PWR IN AVAIL lamp, inform examinee that, "it is lit."**
Performance:	**SATISFACTORY** _____ **UNSATISFACTORY** _____
Comments:	_____

Performance Step: **Critical** **X** **(S-1)**	Turn the PWR OUT SW to the "ON" position. The red lamp on the switch faceplate should be lit.
Standard:	PWR OUT SW is in the ON position and the red indicating light is on.
Evaluator Cue:	**When examinee indicates that he/she would turn the PWR OUT SW to the ON position, inform examinee that, "the switch is in the on position and the red indicating light is on."**
Performance:	**SATISFACTORY** _____ **UNSATISFACTORY** _____
Comments:	_____

Performance Step: **Critical __X__ (S-1)**	Obtain the following plant conditions: Present post-LOCA Containment Pressure in PSIG. Pre-LOCA Containment Temperature from plant computer logs in °F.
Standard:	Present containment pressure and pre-LOCA containment temperature obtained.
Evaluator Note:	**This data can be obtained directly by the examinee using ERCS, but due to the inaccessibility of ERCS terminals locally in the plant, the examinee will probably request this data from the Control Room.**
Evaluator Cue:	**When examinee asks and indicates where data would be obtained, inform examinee that, "current containment pressure is 3.6 psig and pre-LOCA containment temperature was 90 °F."**
Performance:	**SATISFACTORY** _____ **UNSATISFACTORY** _____
Comments:	_____

Performance Step: **Critical __X__ (S-1)**	Determine the pressure factor, Cp, from the Recombiner Power Correction Factor Versus Containment Pressure Curve (Figure 1).
Standard:	Cp determined to be 1.18 and 1.22.
Performance:	**SATISFACTORY** _____ **UNSATISFACTORY** _____
Comments:	_____

Performance Step: **Critical X (S-1)**	Multiply Cp, determined above, by the reference power setting to determine required recombiner power setting.
Standard:	Required recombiner power setting determined to be 45 to 47 kw.
Evaluator Note:	**The reference power setting to be used for this calculation is 38.25 KW.**
Performance:	**SATISFACTORY** _____ **UNSATISFACTORY** _____
Comments:	_____

Performance Step: **Critical** _____	Turn the PWR ADJ potentiometer clockwise until 5 KW is obtained on the PWR OUT meter.
Standard:	PWR ADJ potentiometer is adjusted to 5 kw as indicated on the PWR OUT meter.
Evaluator Cue:	**When examinee indicates that he/she would adjust the PWR ADJ potentiometer to 5 kw, inform examinee that, "the potentiometer is at 5 kw as indicated on the PWR OUT meter."**
Performance:	**SATISFACTORY** _____ **UNSATISFACTORY** _____
Comments:	_____

Performance Step: **Critical** _____	Hold for 10 minutes, then advance to 10 KW.
Standard:	PWR ADJ potentiometer held at 5 kw for 10 minutes, then adjusted to 10 kw as indicated on the PWR OUT meter.
Evaluator Cue:	• **When the examinee gets to this step, inform examinee that, "it has been 10 minutes since the PWR ADJ potentiometer was set to 5 kw."** • **When examinee indicates that he/she would adjust the PWR ADJ potentiometer to 10 kw, inform examinee that, "the potentiometer is at 10 kw as indicated on the PWR OUT meter."**
Performance:	**SATISFACTORY** _____ **UNSATISFACTORY** _____
Comments:	_____

Performance Step: **Critical** _____	Hold for 10 minutes, then advance to 20 KW.
Standard:	PWR ADJ potentiometer held at 10 kw for 10 minutes, then adjusted to 20 kw as indicated on the PWR OUT meter.
Evaluator Cue:	• **When the examinee gets to this step, inform examinee that, "it has been 10 minutes since the PWR ADJ potentiometer was set to 10 kw."** • **When examinee indicates that he/she would adjust the PWR ADJ potentiometer to 20 kw, inform examinee that, "the potentiometer is at 20 kw as indicated on the PWR OUT meter."**
Performance:	**SATISFACTORY** _____ **UNSATISFACTORY** _____
Comments:	_____

Performance Step: **Critical X (S-2)**	Hold for 5 minutes, then advance to power setting obtained above.
Standard:	PWR ADJ potentiometer held at 20 kw for 5 minutes, then adjusted to the required recombiner power setting determined above (49 to 53 kw).
Evaluator Cue:	• **When the examinee gets to this step, inform examinee that, "it has been 5 minutes since the PWR ADJ potentiometer was set to 20 kw."** • **When examinee indicates that he/she would adjust the PWR ADJ potentiometer to required recombiner power setting, inform examinee that, "the potentiometer is at the required setting as indicated on the PWR OUT meter."**
Performance:	**SATISFACTORY** _____ **UNSATISFACTORY** _____
Comments:	_____

Performance Step: **Critical** _____	Adjust potentiometer as required to maintain power setting.
Standard:	Required power setting maintained.
Evaluator Cue:	**If asked, inform examinee that, "required power setting is being maintained."**
Performance:	**SATISFACTORY** _____ **UNSATISFACTORY** _____
Comments:	_____

Performance Step: **Critical** _____	For reference use, read and record the temperature indicator TEMP OUT, which is located on the control panel (read all three thermocouples). Plot the temperature as a function of time, as show in the example Figure 2.
Standard:	All three thermocouples temperature as indicated on the TEMP OUT indicator, read and recorded.
Evaluator Cue:	**When examinee indicates that he/she would read and record all three thermocouple temperatures as indicated on the TEMP OUT indicator, inform examinee that, "all three thermocouples read 75 °F."**
Performance:	**SATISFACTORY** _____ **UNSATISFACTORY** _____
Comments:	_____

Terminating Cues: **When examinee has read the TEMP OUT indicator, inform examinee that, "this JPM is complete."**

Stop Time: _____

TURNOVER SHEET

INITIAL CONDITIONS:

- A LOCA has occurred on Unit 1.
- Containment H_2 concentration is 2%.
- Adequate power is available to supply the recombiners.

INITIATING CUES:

- The SS directs you to start up 11 Containment Hydrogen Recombiner per C19.8, beginning at step 5.1.2.

JOB PERFORMANCE MEASURE WORKSHEET

TASK TITLE: PERFORM RCP ISOLATION FOLLOWING LOSS OF ALL AC POWER

JPM NUMBER: RC-8 **REV.** 8

RELATED PRA INFORMATION (SEE PITC 2.3): PRA Identified Task

TASK NUMBERS: CRO 004.ATI.05 / NLO 003.ATI.05

K/A NUMBERS: 2.1.23 / 003A401 / 003A408

APPLICABLE METHOD OF TESTING:

Simulate Performance: [x] Actual Performance: [ ]

Evaluation Location: Turbine Building: [ ] Auxiliary Building: [x]

Simulator: [ ] Control Room: [ ]

Other: [ ]

Time for Completion: 11 Minutes Time Critical: **NO**

TASK APPLICABILITY: (Check all that apply) SRO: [x] RO: [x] NLO: [x]

PREPARED BY: Mark Jones **DATE:** 4/27/00

APPROVED BY: **DATE:** 5-8-00

Operator: _____ **(SRO / RO / NLO)**

Evaluator: _____

Date: _____

READ TO THE OPERATOR

I will explain the initial conditions, which step(s) to simulate or discuss, and provide initiating cues. When you complete the task successfully, the objective for this job performance measure will be satisfied.

INITIAL CONDITIONS:

- A loss of all AC power has occurred on Unit 1.
- 1ECA-0.0 is in progress.

INITIATING CUES:

- The SS directs you to isolate Unit 1 RCP seals per 1ECA-0.0, step 18.

JPM PERFORMANCE INFORMATION

Required Materials: Picture showing location of MV-32166.

General References: 1ECA-0.0 and 5AWI 3.10.0

Task Standards: RCP seals isolated.

Start Time: _____

NOTE: When providing "Evaluator Cues" to the examinee, care must be exercised to avoid prompting the examinee. Typically cues are only provided when the examinee's actions warrant receiving the information (i.e. the examinee looks or asks for the indication).

NOTE: Critical steps are marked with an "X" below the performance step number. Failure to meet the standard for any critical step shall result in failure of this JPM.

Performance Step: **Critical X (S-1)**	Dispatch Personnel To Locally Close Valves To Isolate RCP Seals: • RCP seal return isolation valve (MV-32166) - CLOSED.
Standard:	MV-32166 CLOSED as follows: • Breaker 1L1-E1 turned off. • Motor clutch engaged and handwheel turned until indicator points to close.
Evaluator Note:	• **Not turning breaker 1L1-E1 off would not be critical to performing this task, if examinee does not turn it off in recognition of the fact that the valve is de-energized due to the Loss of All AC Power.** • **This valve is located inside a Surface Contamination Area on the 715' elevation, up against the containment wall by the SG Blowdown Flash Tank. As you are standing in front of the step-off pad facing into the area, there are two air operated control valves, the one closest to you being CV-31438, Sump A Discharge Isolation. MV-32166 is the first motor operated valve that can be seen located just beyond the second air operated control valve.** • **The relative location of MV-32166 is indicated on the survey map posted at the step-off pad for the Surface Contamination Area.** • **The attached picture may be used to have the examinee demonstrate knowledge of the valve location. If the examinee desires to enter the area to verify actual valve location, then he/she will have to review and comply with the entry requirements. The requirements are posted at the step-off pad or can be obtained from the Duty HP Tech.**
Evaluator Cue:	• **If asked, inform examinee that, "spring pack detentioning is not required."** • **When examinee locates and indicates that he/she would turn off 1L1-E1, inform examinee that, "the breaker is off."** • **When examinee locates and indicates that he/she would engage the clutch on MV-32166, in the direction of the arrow, inform examinee that, "the clutch is engaged."** • **When examinee indicates that he/she would rotate the handwheel on MV-32166, until the indicator points to close, inform examinee that, "the indicator points to close."**
Performance:	**SATISFACTORY** _____ **UNSATISFACTORY** _____
Comments:	_____

Performance Step: **Critical X (S-1)**	Dispatch Personnel To Locally Close Valves To Isolate RCP Seals: • RCP seal injection throttle valves (VC-14-1 and VC-14-2) - CLOSED.
Standard:	VC-14-1 and VC-14-2 CLOSED.
Evaluator Cue:	**When examinee locates and indicates that he/she would close VC-14-1 and VC-14-2, inform examinee that, "the stem on both valves is all the way down."**
Performance:	**SATISFACTORY** _____ **UNSATISFACTORY** _____
Comments:	_____

Performance Step: **Critical X (S-1)**	Dispatch Personnel To Locally Close Valves To Isolate RCP Seals: • RCP CC return isolation valves (CC-16-3 and CC-16-2) - CLOSED.
Standard:	CC-16-3 and CC-16-2 CLOSED.
Evaluator Cue:	**When examinee locates and indicates that he/she would close CC-16-3 and CC-16-2, inform examinee that, "the stem on both valves is all the way down."**
Performance:	**SATISFACTORY** _____ **UNSATISFACTORY** _____
Comments:	_____

Terminating Cues: **When RCP seal cooling is isolated, inform examinee that, "this JPM is complete."**

Stop Time: _____

TURNOVER SHEET

INITIAL CONDITIONS:

- A loss of all AC power has occurred on Unit 1.
- 1ECA-0.0 is in progress.

INITIATING CUES:

- The SS directs you to isolate Unit 1 RCP seals per 1ECA-0.0, step 18.

JOB PERFORMANCE MEASURE WORKSHEET

TASK TITLE: CROSS-CONNECTING 21 MD AFW PUMP TO UNIT 1

JPM NUMBER: AF-3 **REV.** 9

RELATED PRA INFORMATION (SEE PITC 2.3): None

TASK NUMBERS: CRO 061.ATI.05

K/A NUMBERS: 2.1.23 / 061A103 / 054AA102

APPLICABLE METHOD OF TESTING:

Simulate Performance: [x] Actual Performance: [ ]

Evaluation Location: Turbine Building: [ ] Auxiliary Building: [ ]

Simulator: [ ] Control Room: [x]

Other: [ ]

Time for Completion: 8 Minutes Time Critical: **NO**

TASK APPLICABILITY: (Check all that apply) SRO: [x] RO: [x] NLO: [ ]

PREPARED BY: Mark Jones **DATE:** 4/27/00

APPROVED BY: _____ **DATE:** 5-8-00

Operator: _____ **(SRO / RO / NLO)**

Evaluator: _____

Date: _____

READ TO THE OPERATOR

I will explain the initial conditions, which step(s) to simulate or discuss, and provide initiating cues. When you complete the task successfully, the objective for this job performance measure will be satisfied.

INITIAL CONDITIONS:

- Unit 2 is in refueling shutdown.
- Unit 1 is in Hot Shutdown with a reactor startup planned.
- 12 MD AFW pump is inoperable.
- 21 MD AFW pump is operable, but not running.
- AFW system is aligned per 1C28.1 checklist.

INITIATING CUES:

- The Unit 2 SS directs you to perform the following:
  - Cross-tie Unit 1 and Unit 2 AFW systems and supply 11 and 12 SGs with AFW from 21 AFW pump per 1C28.1 section 5.7.
  - Maintain direct administrative control over 21 MD AFW pump to meet T.S. 3.4.

JPM PERFORMANCE INFORMATION

Required Materials: None

General References: 1C28.1

Task Standards: 21 MD AFW pump aligned to 11 and 12 steam generators.

Start Time: _____

NOTE: When providing "Evaluator Cues" to the examinee, care must be exercised to avoid prompting the examinee. Typically cues are only provided when the examinee's actions warrant receiving the information (i.e. the examinee looks or asks for the indication).

NOTE: Critical steps are marked with an "X" below the performance step number. Failure to meet the standard for any critical step shall result in failure of this JPM.

Performance Step: **Critical** _____	Place CS-46425, 12 MD AFWP control switch in "PULLOUT".
Standard:	CS-46425 placed in PULLOUT.
Evaluator Cue:	**When examinee indicates that he/she would place CS-46425 in pullout, inform examinee that, "control switch is in pullout."**
Performance:	**SATISFACTORY** _____ **UNSATISFACTORY** _____
Comments:	_____

Performance Step: **Critical X (S-1)**	Place CS-46785, 21 MD AFWP selector switch in "MANUAL".
Standard:	CS-46785 placed in MANUAL.
Evaluator Cue:	**When examinee indicates that he/she would place CS-46785 in manual, inform examinee that, "control switch is in manual."**
Performance:	**SATISFACTORY** _____ **UNSATISFACTORY** _____
Comments:	_____

Performance Step: **Critical** _____	Stop 21 MD AFW Pump, if running.
Standard:	21 MD AFW Pump verified not running.
Evaluator Cue:	• **If asked, inform examinee that, "21 AFW pump is not running per initial conditions."** • **If examinee indicates that he/she would check the indicating lights on CS-46770 for 21 AFW pump, inform examinee that, "the green light is on and the red light is off."**
Performance:	**SATISFACTORY** _____ **UNSATISFACTORY** _____
Comments:	_____

Performance Step: **Critical __X__ (S-1)**	CLOSE 21 MD AFW Pump discharge valves to the Unit 2 steam generators: MV-32383, 21 MD AFWP TO 21 STM GEN, using CS-46840. MV-32384, 21 MD AFWP TO 22 STM GEN, using CS-46841.
Standard:	MV-32383 and MV-32384 CLOSED, by using CS-46840 and CS-46841 respectively; green lights on, red lights off.
Evaluator Cue:	**When examinee indicates that he/she would close MV-32383 and MV-32384, inform examinee that, "the green lights are on and the red lights are off for MV-32383 and MV-32384 ."**
Performance:	**SATISFACTORY** _____ **UNSATISFACTORY** _____
Comments:	_____

Performance Step: **Critical** _____	CLOSE 12 MD AFW Pump discharge valves to the Unit 1 steam generators: MV-32381, 12 MD AFWP TO 11 STM GEN, using CS-46316. MV-32382, 12 MD AFWP TO 12 STM GEN, using CS-46317.
Standard:	MV-32381 and MV-32382 CLOSED, by using CS-46316 and CS-46317 respectively; green lights on, red lights off.
Evaluator Cue:	**When examinee indicates that he/she would close MV-32381 and MV-32382, inform examinee that, "the green lights are on and the red lights are off for MV-32381 and MV-32382."**
Performance:	**SATISFACTORY** _____ **UNSATISFACTORY** _____
Comments:	_____

Performance Step: **Critical** _____	CLOSE AF-13-4, 12 AFWP DISCHARGE.
Standard:	Directs outplant operator to CLOSE AF-13-4.
Evaluator Cue:	**When directed, acknowledge direction, then report that, "AF-13-4 is closed."**
Performance:	**SATISFACTORY** _____ **UNSATISFACTORY** _____
Comments:	_____

Performance Step: **Critical** __X__ **(S-1)**	OPEN the MD AFW pump manual discharge cross-connect valves: AF-13-1, 12 & 21 MD AFW PMPS DISCH X-CONN. 2AF-13-1, 12 & 21 MD AFW PMPS DISCH X-CONN.
Standard:	Directs outplant operator to OPEN AF-13-1 and 2AF-13-1.
Evaluator Cue:	**When directed, acknowledge direction, then report that, "AF-13-1 and 2AF-13-1 are open."**
Performance:	**SATISFACTORY** _____ **UNSATISFACTORY** _____
Comments:	_____

Performance Step: **Critical __X__ (S-2)**	Start 21 MD AFW Pump using CS-46770.
Standard:	21 MD AFW Pump started, using CS-46770; red light on, green light off.
Evaluator Cue:	**When examinee indicates that he/she would start 21 MD AFW pump, inform examinee that, "the red light is on and the green light is off for 21 MD AFW Pump."**
Performance:	**SATISFACTORY _____ UNSATISFACTORY _____**
Comments:	_____

Performance Step: **Critical __X__ (S-3)**	Throttle flow as necessary to maintain desired Unit 1 SG level using MV-32381 and MV-32382.
Standard:	Flow established on FI-41227 and FI-41228 by throttling open MV-32381 and MV-32382 using CS-46316 and CS-46317 respectively; red lights on, green lights on (dual indication).
Evaluator Note:	**This is not a critical step if these valves were left open earlier.**
Evaluator Cue:	• **When examinee indicates that he/she would throttle open MV-32381 and MV-32382, while observing flow on FI-41227 and FI-41228, inform examinee that, "the red lights are on and the green lights are on (dual indication) for MV-32381 and MV-32382 and FI-41227 and FI-41228 indicate 100 gpm each."** • **If examinee asks for flow to maintain, inform examinee to, "maintain this flow until SG level response is determined."**
Performance:	**SATISFACTORY _____ UNSATISFACTORY _____**
Comments:	_____

Performance Step: **Critical** _____	When conditions allow, then post the "12/21 AFW Pumps Cross-Connected" warning sign on each unit's Aux Feedwater Control Panel.
Standard:	12/21 AFW Pump Cross-Connected warning signs located and posted on each unit's AFW control panel.
Evaluator Note:	**Warning signs are located in the RO desk drawer.**
Evaluator Cue:	**When examinee locates the warning signs and indicates where he/she would post them, inform examinee that, "the warning signs are posted.**
Performance:	**SATISFACTORY** _____ **UNSATISFACTORY** _____
Comments:	_____

Terminating Cues: **When the warning signs are posted, inform examinee that, "this JPM is complete."**

Stop Time: _____

TURNOVER SHEET

INITIAL CONDITIONS:

- Unit 2 is in refueling shutdown.
- Unit 1 is in Hot Shutdown with a reactor startup planned.
- 12 MD AFW pump is inoperable.
- 21 MD AFW pump is operable, but not running.
- AFW system is aligned per 1C28.1 checklist.

INITIATING CUES:

- The Unit 2 SS directs you to perform the following:
  - Cross-tie Unit 1 and Unit 2 AFW systems and supply 11 and 12 SGs with AFW from 21 AFW pump per 1C28.1 section 5.7.
  - Maintain direct administrative control over 21 MD AFW pump to meet T.S. 3.4.

FINAL AS-ADMINISTERED SCENARIOS

FOR THE PRAIRIE ISLAND INITIAL EXAMINATION THE WEEK OF MAY 15, 2000

Appendix D Scenario Outline Form ES-D-1

Facility: Prairie Island Scenario No.: 2 Op-Test No.: A

Examiners: _____ Operators: _____

Initial Conditions: **(IC-7) 6%, BOC, Equil Xe**

Turnover: [1]Emergency Diesel Gen D2 OOS **DELETED**
[1]MDAFWP 12 OOS **deleted per examiner direction**
Severe thunderstorm warning in effect for southeastern Minnesota
Dispatcher requests Unit to return to 100% power this shift

Event No.	Malf. No.	Event Type*	Event Description
0	RP08A	C	Failure of Train A SI to actuate **in auto/manual requiring manual Train A CI and manual component alignment**
0	CC02B	C	[1]12 CCW Pump Fails to Start in Auto
0	RD06L	C	Shutdown Bank B Rod K-9 Sticks at Top
0			13 Cond Pump fails to start in Auto & trips when manually started **deleted, not required at low power**
1		N	Increase Power to 100% **deleted; replaced by placing main generator on the grid**
2	OVRD	I	Pzr Level Control channel fails low **deleted, too many instrument malfunctions**
2	OVRD	I/R	Controlling **12** SG Steam Press Xmtr fails high, causing **12 SG PORV to open in Auto (changed per examiner direction)**
3	RC11A 1.5%	C	11 SG Tube Leak **deleted, replaced by RTD manifold leak per examiner direction**
5	FW01B	C	12 Condensate pump trip **deleted, don't need component or reactivity event**
6	OVRD RC24A	C	Controlling Pzr Pressure Xmtr fails High **deleted, too many instrument malfs and redundant to SGTR**
4	SG02A 10%	M	[2]11 SG Tube Rupture (**400** gpm), **plus added increasing RTD leakage to 200 gpm to ensure ECA-3.1 transition**
4	OVRD	C	11 SG **Safety Valve** Fails Open **Deleted- too similar to audit scenario**

* (N)ormal, (R)eactivity, (I)nstrument, (C)omponent, (M)ajor
[1] PRA significant components OOS.

[2] PRA significant sequence SGTR (7.1% CDF)

Simulator Exercise Guide

File Number: Att. SRO-00-B **Rev: 0**	**Title: 2000 SRO NRC Exam Evaluation 'B'**
Lesson Plan: P8140S-001	**Duration: 2 hrs**
Author: J. Kempkes	**Approved by: Date:**

OBJECTIVES:

1. Place the generator online per 1C1.2.
2. Diagnose and respond to a SG pressure channel failure high resulting in SG PORV lift per C47 and C51.
3. Diagnose and respond to RCS leakage from the RTD manifold per C47 and C4 AOP1.
4. Diagnose and respond to a ruptured steam generator with a loss of coolant per E-0, E-2, E-3 and ECA-3.1.

RELATED LER's, SER's, SOER's, etc.:
None

RELATED PRA INFORMATION (See PITC 2.3):

Initiating Event with Core Damage Frequency:
Steam Generator Tube Rupture (7.1%)

Important Components:
AF - 12 Aux Feedwater pump
D2 Emergency Diesel Generator

Important Operator Actions with Task Number:
Cooldown and depressurize from SGTR after overfill (ECA-3.1)
CRO 301.ATI.20

SCENARIO OVERVIEW

Initial Conditions:

- IC-7 6% power, BOC, Xe free, ready to close 8H16 and place generator online
- 12 AFW pump OOS for bearing replacement- high temperature during prolonged operation
- Severe Thunderstorm Warning in effect for southeastern Minnesota
- Place generator online and continue with plant startup to 100% power

Sequence of Events:

Event 1: Place Generator Online

- Prejob brief conducted by SRO.
- Power raised to 8%.
- Generator placed online normally per 1C1.2 section 5.6.13.

Event 2: SG Pressure Channel Failure

- 1P-468 fails high.
- 11 SG PORV opens in AUTO and must be closed in MANUAL to prevent overpower.
- Associated bistables are tripped.

Event 3: RCS Leak

- A non-isolable 20 gpm RCS leak develops on the Loop A cold leg RTD manifold.
- Response per C4 AOP1 is not successful in isolating leak.
- A shutdown is required per Technical Specifications.

Event 4: SGTR with LOCA

- A 200 gpm SGTR occurs with no warning. During the event, the RCS leak worsens to 200 gpm.
- Train A SI will not actuate due to preexisting malfunctions. Train A CI must be manually actuated. The Order 0 failure of 12 CC pump not starting in auto will result in no Train B CC flow until 12 CC is manually started.
- Actions are taken to cooldown and depressurize the RCS using E-0, E-3 and ECA-3.1.

PRE-EXERCISE BRIEF

1. Ensure exam security is maintained if this scenario is being done more than once. See appropriate exam security checklists and ensure students understand escorting rules.
2. Prebrief crew using information from NUREG 1021 Rev. 8, App. E part E, Simulator Test Guidelines, or equivalent.

INSTRUCTOR GUIDE

1. Ensure exam security measures for the simulator and simulator doors are in place.

2. Initialize the simulator to IC-7 and perform the following, or use saved file.

   a. Place 12 AFW pump control switch in PULLOUT and attach a secure card. Close 12 AFW pump discharge MOV's, open the MCCB's, and attach secure cards.

   b. Ensure 11 CC pump is the running pump.

   c. Insert Order 0 malfunctions: ***(Relative Order 0)***
      - Failure auto Train A SI
      - Failure of autostart on 12 CC pump
      - Stuck rod K-9

   d. Insert remaining malfunctions on remotes.

3. Prepare the simulator for the examination:

   a. Advance all chart recorders and ensure examiners time/date and initial them.

   b. Ensure all ERCS terminals are functioning normally.

   c. Verify all RPI's/counters at 228 with C@ 189 and D @ 61.

   d. Ensure recorder power is ON and alarms are not silenced.

   e. Place turnover sheet and copy of LCO log in turnover book.

   f. Place secure cards on 8H17B1 and B2 MOD switches CS-46073 and 46147.

   g. When examiners are ready, bring applicants in and conduct a turnover.

4. Allow a few minutes for the applicants to walk down the control boards. Conduct remaining scenario actions as written when directed by the Lead Examiner.

5. Allow the crew to place the generator online per 1C1.2 section 5.6.13.

6. When the sync scope is placed in the "8H17" position, enter the failure of 11 SG pressure channel 1P-468 High ***(Relative Order 1, Event Trigger #1)***.

   a. 11 SG PORV will open in AUTO and has to be closed in manual to prevent a power excursion. The startup actions will be discontinued.

b. Crew will respond per C51.

c. Trip bistables as I&C when directed ***(Relative Order 1a)***.

7. Enter the 20 GPM RCS leak ***(Relative Order 2, Event Trigger #2)***.

   a. Initial indications will be rapidly increasing containment radiation and lowering pressurizer level and pressure.

   b. C4 AOP1, Reactor Coolant Leak, is entered. Actions to isolate the leak (isolating charging, letdown) are not successful.

   c. Once the SRO has identified actions required per TS 3.1.C.2, the scenario may continue.

8. Enter the 11 SG Tube Rupture and Increasing RCS Leakage ***(Relative Order 3, Event Trigger #3)***.

   a. Train A ESF actuations must be done manually due to failure of Train A SI logic. All actions can be completed from the control room except the 11/13 FCU bypasses ***(Relative Order 4, Event Trigger #4)***.

   b. When directed, isolate Unit 1 MSR's and turn off turbine building roof exhausters ***(Relative Order 5, Event Trigger #5)***.

   c. If necessary, increase LOCA size following E-3 cooldown to drive crew to ECA-3.1.

9. Terminate the scenario when directed by the lead examiner after cooldown is started in ECA-3.1.

10. Direct the SS to complete PINGP 577 for the highest emergency classification reached. He may ask the board operators for information to help classify, but not receive help making the classification and notification.

11. Escort the applicants during followup and clarification questions. If another group will receive the same scenario, ensure exam security is maintained during the transition between scenarios.

Title: 2000 SRO NRC Exam Evaluation 'B'	File Number: Att. SRO-00-B Rev: 0

Name: _____ Position: SM SS Lead RO

Date: _____

Event Description	KA Number	KA Value
Place Generator Online	045 A4.01	3.1/2.9

Time	S/U	Position	Expected Response
		SS	Conduct prebrief of section 5.6.13
		RO	Raise reactor power to 8%
		Lead	Establish conditions to sync generator (sync scope rotation speed, voltages, sync lights)
		Lead	Close 8H16 and confirm closure; repeat if missed sync
		RO	Maintain reactivity control during turbine loading transient
		Lead	Verify 8H17 open and remove MOD secure cards
		Lead	Place sync scope in the 8H17 position

Comments:

Title: **2000 SRO NRC Exam Evaluation 'B'**	File Number: **Att. SRO-00-B** Rev: **0**

Event Description	KA Number	KA Value
SG Pressure Channel Failure High	035 A2.03	3.4/3.6

Time	S/U	Position	Expected Response
		Lead	Address FW Trouble Alarm 47011:0405 - Verify SG level controlling properly in AUTO. – Refer to 1C51 for 1P-468 failed high. – Increase monitoring of SGWLC. – Contact I&C and system engineer.
		Lead/RO	C51 Actions - Take manual control of 11 SG PORV and ensure closed. – Verify SGWLC operating properly in AUTO.
		SS	Determine 6 hr LCO until B/S tripped per TS Table3.5-2.b
		RO/Lead	Trip bistables 1PC-468A and 468B
		Lead/SS	Ensure work order is initiated on failed instrument.
		SS	Consider impact on calorimetric program

Evaluator Note:

Comments:

Event Description	KA Number	KA Value
RCS Leak	037 AA2.06	4.3/4.5

Time	S/U	Position	Expected Response
		Lead	Radiation Monitor Train B alarm - R-2, R-7, R-11 and R-12 alarming at radiation monitoring panel - Refer to C47 alarm response - Enter C4 AOP1, Reactor Coolant Leak
		RO	Maintain RCS inventory (may start additional charging pump and/or isolate letdown)
		RO	Verify VCT makeup adequate to maintain level
		Lead/SS	Start an ERCS 'LEAK' program to quantify leakage
		Lead	Determine leak in containment with Fig. 1 and Tables
		Lead/RO	Sequentially isolate systems to identify leakage source. – Letdown - Charging to Regen HX - Charging to RCP seals Charging may be reestablished once ruled out as leakage source.
		SS	Refer to T.S. 3.1.C.2.d and recognize required to initiate actions to shutdown within 1 hour and be in HOT SHUTDOWN in the following 6 hours[1] ***(critical task)***
		SS	Refer to TS 3.4.D and 3.1.C for LCO's
		Lead/SS	Direct HP's to sample turbine building sump for activity
		Lead	Refer to 1C4 AOP2 Steam Generator Tube Leak

Comments: [1]Critical task is met if SS directs action to begin shutdown within 1 hour of recognizing unidentified leakage is >10 gpm.

Event Description	KA Number	KA Value
Steam Generator Tube Rupture with LOCA	038 EA 2.02	4.5/4.8

Time	S/U	Position	Expected Response
		RO	Recognize RCS inventory cannot be maintained. – Isolate letdown (if not already isolated) - Maximize charging flow - Initiate manual reactor trip or verify automatic reactor trip.
			E-0 Immediate Actions
		RO	Verify reactor trip.
		Lead	Verify turbine trip
		Lead	Verify safeguards buses energized.
		RO	Check if SI has actuated. – If not, check if SI required (likely on low pressurizer level or low pressure) - If recognize SI has only actuated on Train B, attempt manual SI

Comments:

Event Description	KA Number	KA Value
E-0 Reactor Trip or Safety Injection	007 EA2.06	4.3/4.5

Time	S/U	Position	Expected Response
			E-0 Reactor Trip and Safety Injection
		RO	-Trip the reactor
		Lead	-Verify turbine tripped.
		Lead	-Verify safeguards buses energized
		RO	-Actuate SI due to inability to maintain pressurizer level above 5%.
		Lead	-Verify component alignment.
		Lead	-Check CL pressures >65 psig.
		SS	-Announce Rx trip and SI, notify SEC.
		Lead	-Close MV-32115.
		SS	-Ensure communication with NRC is established within 1 hour.
		Lead	-Open turbine HP drains.
		Lead	-Direct outplant to stop the TB roof exhausters and isolate the MSR's per Att. J.
		Lead	-Verify >200 gpm total AFW flow & AFW pump pressure >900 psig.
		Lead/SS	-Implement Auto Action guide, Table E0-1 (direct extra operator).
		Lead	-Place steam dump in "Steam Pressure" mode.
		SS	-Diagnose ruptured SG and transition to E-3.

Comments:

Event Description	KA Number	KA Value
E-3 Steam Generator Tube Rupture	038 EA1.36	4.3/4.5

Time	S/U	Position	Expected Response
			E-3
		SS	Identify 11 SG as ruptured.
		Lead	Verify flow isolated from 11 SG.
		SS/Lead	Maintain feed flow isolate to 11 SG
		RO	Check PORVs and block valves closed
		SS	Recognize no SGs faulted
		Lead	Maintain AFW >200gpm to 12 S/G until NR>10%
		Lead	Reset SI and CI, verify instrument air to containment
		Lead	Check safeguard buses from offsite power
		Lead	Check ruptured SG pressure >250 psig
		Lead	Initiate RCS cooldown ***(Critical Task)***[2]
		SS	-Determine required CETC temperature.
		Lead	-Cooldown at max rate using condenser dump or 12 SG PORV.
		Lead	Maintain CETC temperature once desired value is attained.

Evaluator Note: [1] If transition to ECA-3.1 is met at this step, continue 2 pages further.
[2] Critical task is met when RCS cooldown is initiated per E-3 or ECA-3.1.

Comments:

Title: **2000 SRO NRC Exam Evaluation 'B'**	File Number: **Att. SRO-00-B** Rev: **0**

Event Description	KA Number	KA Value
E-3 Steam Generator Tube Rupture	038 EA1.36	4.3/4.5

Time	S/U	Position	Expected Response
		Lead	Stop RHR pumps
		RO	Establish maximum charging flow.
		Lead	Verify ruptured SG pressure stable or increasing
		RO	Check subcooling adequate[1]
		RO	- Depressurize RCS to refill pressurizer - Heaters off - Use pressurizer spray or PORV - Verify RCS pressure increasing[1]
		SS	Check if SI should be terminated. [1]
		Lead	Stop SI pumps.
		RO	Establish charging flow.
		SS	Transition to ECA-3.1 on loss of subcooling or pressurizer level. If not met at Step 25, transition based on information page when lost.

Evaluator Note: [1] If transition to ECA-3.1 is met at this step, continue on next page.

Comments:

Event Description	KA Number	KA Value
ECA-3.1 SGTR w/ LOCA	038 EA1.36	4.3/4.5

Time	S/U	Position	Expected Response
		Lead	Reset SI, CI, Establish Containment Instrument Air
		Lead	Verify safeguards buses from offsite power
		Lead/RO	Stop CS pumps if containment <18#
		RO/Lead	Stop RHR pumps
		Lead/RO	Verify FW isolated to ruptured SG
		RO	Establish maximum charging flow (may start 2nd pump)
		Lead	Verify no faulted SGs
		Lead	Control intact SG level 10-50% NR
		Lead	Initiate cooldown at rate <100 degF/hr

Evaluator Note: Terminate scenario when cooldown begun. Critical task if not completed in E-3.

Comments:

Simulator Input Summary

Relative Order	System or Panel Drawing	TYPE	CODE	Severity or Value	Event Trigger	TIMING	DESCRIPTION
0		MFS	RP08A				FAILURE AUTO TRN A SI
0		MFS	CC02B				12 CC PUMP FAILS TO START IN AUTO
0		MFS	RD06L				SDB ROD K-9 STUCK
1		SO	RX213	1400	1		SG PRESSURE PT-468 FAILS HIGH
1A		RF	RP114	TRIP			B/S TRIPS PER C51 PC-468A
1A		RF	RP127	TRIP			PC-468B
2		MFS	RC11A	1.5	2		20 GPM RTD MAN. LEAK
3		MFS	SG02A	3	3		200 GPM SG TUBE RUPTURE (ON RX TRIP)
3		MFS	RC11B	15	3		RCS LEAK TO 200 GPM
4		RF	CL105	OPEN	4		FCU BYPASS VALVES
5		RF	MS108	CLOSED	5	+100	ISOLATE MSR'S
		RF	MS109	CLOSED	5	+200	
		RF	MS110	CLOSED	5	+300	
		RF	MS111	CLOSED	5	+400	

Appendix D | Scenario Outline | Form ES-D-1

Facility: Prairie Island Scenario No.: 1 Op-Test No.: A

Examiners: _____ Operators: _____

Initial Conditions: (IC-8) 100%, MOC, Equil Xe; Unit 2 at 100% power

Turnover: [1]Emergency Diesel Gen D2 OOS for brush rigging repair (OOS 1 hr, ETR 5 hrs)
[1]MDAFWP 12 OOS for bearing replacement (OOS 4 hrs, ETR 16 hrs)
SG leaks deleted as initial conditions for all scenarios
Severe thunderstorm warning in effect for southeastern Minnesota
Dispatcher expects both units to remain at 100% power for rest of shift

Event No.	Malf. No.	Event Type*	Event Description
0	RP02 A/B	C	Failure of RTB's to open (ATWS)
0	TC11B	C	Turbine Trip Failure Auto/Manual
0	FW34,33,10	C	[1]TDAFWP Fails to start in Auto, Trips on manual start, won't restart
0	OVRD	C	[2]**Failure of SI Reset Pushbuttons,** [1]AFW cross-connect valve 2AF-13-1 jammed shut
1	RX 13A/B	I	Selected Turbine 1st Stage Press Xmtr Fails Low; Rods insert in Auto
2	RX11B 100%	I	**Deleted** Feedwater Controller output fails high in Auto; not required malfunction and cross purpose to major transient
2	OVRD	C	Letdown PCV fails closed in Auto, causing loss of letdown
3	CR 01 50%	C	Fuel Cladding Failure (Chemistry reports DE I-131 is 97 µc/gm when asked) If asked, Ops Mgr directs maximize letdown and shut down
4	--	N/R	Decrease load for Controlled Shutdown now used as normal transient
5	FW31A	C	11 Heater Drain Pump fails to minimum **deleted, power change is normal op and too many component failures**
5	FW19A	M	[2]Feedwater Rupture inside Containment with ATWS, Turbine Trip Failure causing loss of SG inventory
6A	ED09G	M	**Bus lockout deleted- redundant to AFW x/c valve stuck failure**

* (N)ormal, (R)eactivity, (I)nstrument, (C)omponent, (M)ajor
[1] PRA significant components OOS
[2] PRA significant event Loss of MFW (4.4% CDF)

Simulator Exercise Guide

File Number: Att. SRO-00-A **Rev: 0**	**Title: 2000 SRO NRC Exam Evaluation 'A'**
Lesson Plan: P8140S-001	**Duration: 2 hrs**
Author: J. Kempkes	**Approved by: Date:**

OBJECTIVES:

1. Diagnose and respond to a failure of a turbine first stage pressure transmitter per C51 and SWI-O-50.
2. Diagnose and respond to a failure of the Letdown Pressure Control Valve per C47 and C12.1 AOP3.
3. Recognize and respond to a Fuel Cladding Failure and direct a unit shutdown as required by TS 3.1.D.2.a.
4. Perform a load change of >5% power during unit shutdown per 1C1.4.
5. Respond to a feedwater line rupture in containment with a failure of the reactor to trip per E-0 and FR-S.1.
6. Respond to a loss of all feedwater flow requiring bleed and feed cooling per E-0 and FR-H.1.

RELATED LER's, SER's, SOER's, etc.:
None

RELATED PRA INFORMATION (See PITC 2.3):

Initiating Event with Core Damage Frequency:
Loss of MFW (4.4%)

Important Components:
AF - Aux Feewater pumps 11, 12, 21
D2 Emergency Diesel Generator
RP- Reactor Protection system

Important Operator Actions with Task Number:
Establish RCS bleed and feed CRO 3110060601

SCENARIO OVERVIEW

Initial Conditions:

- IC-10 100% power, MOC, equilibrium Xe
- D2 OOS for brush rigging repair
- 12 AFW pump OOS for bearing replacement
- Severe Thunderstorm Warning in effect for southeastern Minnesota
- No power changes planned for upcoming shift

Sequence of Events:

Event 1: Turbine Pressure Channel Failure

- PT-485 fails low
- Rods step in in AUTO until manual control taken
- Response per C51

Event 2: Loss of Letdown

- Pressure transmitter to controller fails high, causing valve to close.
- Loss of Letdown Flow to the VCT responded to with C47 and C12.1 AOP3.
- Excess Letdown established
- Load changes minimized

Event 3: Fuel Element Failure

- Chemistry sample shows DE I-131 of 97 microcuries per gram
- TS required shutdown recognized

Event 4: Power Reduction

- Power is reduced at least 5% for shutdown per 1C1.4.

Event 5: Loss of feed ATWS

- ATWS failure results in loss of secondary inventory
  - Rx trip breakers fail to open automatically or by manual trip from control room (order 0)
  - Turbine fails to trip (order 0), resulting in additional inventory loss until MSIV's are closed
- Heat sink cannot be established
  - Order 0 failures of TDAFW pump failure to start, with MDAFW pump already OOS and stuck valve prevents establishment of Unit 1 or Unit 2 AFW to Unit 1.
  - Order 0 failure of SI reset pushbuttons prevents starting CD or FW pumps.
- Feed and bleed cooling is eventually required.

PRE-EXERCISE BRIEF

1. Ensure exam security is maintained if this scenario is being done more than once. See appropriate exam security checklists and ensure students understand escorting rules.
2. Prebrief crew using information from NUREG 1021 Rev. 8, App. E part E, Simulator Test Guidelines, or equivalent.

INSTRUCTOR GUIDE

1. Ensure exam security measures for the simulator and simulator doors are in place.

2. Initialize the simulator to IC-10 and perform the following, or use snapshot IC taken during development.

   a. Remove D2 from service by placing its control switch and output breaker in PULLOUT and the breaker selector in MANUAL and attach secure cards. Place "D2 Out of Service" signs on control board.

   b. Place 12 AFW pump control switch in PULLOUT and attach a secure card. Close 12 AFW pump discharge MOV's, open the MCCB's, and attach secure cards. Place selector switch in MANUAL.

   c. Insert Order 0 malfunctions: ***(Relative Order 0)***

      - Failure of reactor trip breakers to open
      - Turbine trip failure

   d. Setup remaining malfunctions on remotes.

3. Prepare the simulator for the examination:

   a. Advance all chart recorders and ensure examiners time/date and initial them.

   b. Ensure all ERCS terminals are functioning normally. Verify rod inputs for "RBU" are correct.

   c. Verify all RPI's and step counters indicate 228 with bank D at 218

   d. Ensure recorder power is ON and alarms are not silenced

   e. Place turnover sheet and copy of LCO log in turnover book.

   f. When examiners are ready, bring applicants in and conduct a normal turnover.

4. Allow a few minutes for the applicants to walk down the control boards. Conduct remaining scenario actions as written when directed by the Lead Examiner.

5. Enter failure of PT-485 low ***(Relative Order 1, Event Trigger #1)***.

   a. Rods will step in until taken to MANUAL.

b. Steam dump to Steam Pressure Mode.

c. Respond as I&C to instrument failure and trip of bistable 1PC-485A (relative order 1a).

d. After about 5 minutes, report bistable is independently verified and a work order has been generated.

e. Allow time for crew to address alarms received.

6. Enter the fuel cladding failure ***(Relative Order 2, Event Trigger #2)***.

a. 1R-9 will alarm indicating approximately 1 R/hr. This level will not require unit shutdown.

b. Acknowledge all direction for sampling and surveying. Sample results and survey results will not be given until the next event is completed.

c. Continue when crew has directed activities and is waiting for results. Note: Once 1R-9 is confirmed locally, an NUE condition 5A is met.

7. Fail high the letdown low pressure transmitter 1PT-135 to cause the letdown CV-31203 to go closed ***(Relative Order 3, Event Trigger #3)***.

a. Letdown flow will be stopped and the high pressure letdown relief will cycle open to the PRT until the letdown orifice isolation valves or loop isolation valves are shut. The only alarm will be for the relief high temperature alarm.

b. 1HC-135 controller will operate in MANUAL if desired, but there will be no indication of letdown pressure. It is possible to restore letdown flow to 40 gpm, but when contacted the engineer does not recommend operating letdown with the controller in manual and no indication.

c. If directed to investigate locally, report after 5 minutes that your dosimeter alarmed as you attempted to investigate the problem and you had to back off until the area can be resurveyed.

d. The crew should isolate letdown per C12.1 AOP3 OR normal procedures in C12, then establish excess letdown. The radiation levels previously existing for 1R-9 will not prevent establishing excess letdown, BUT 1R-9 will no longer monitor letdown radiation.

8. Once excess letdown has been establish, call the control room with two reports:

a. Local surveys at the 1R-9 location indicate radiation levels of 1.2 R/hr gamma. Rad protection is conducting a resurvey of the aux building beginning with the CVCS system.

b. The chemist reports that DE I-131 concentration is 97 microcuries per gram, which is over a 1000 times normal. He is continuing to analyze the samples and will bring a full chemistry report to the control room when complete.

c. Based on 1R-9 confirmation, the SS should determine that NUE conditions are met for condition 5a OR direct another SRO to investigate F3-2.

d. Based on DE I-131 of 97 uCi/g, TS 3.1.D.2.a must be recognized met and a shutdown and cooldown <500 degF in six hours required. Fig TS.3.1-3 must be used to determine the need for shutdown.

e. If the Nuclear Engineer, GSPO or SM are contacted for guidance, reply that a shutdown should be commenced immediately per normal procedures.

f. GSPO and resident inspector should be notified of required shutdown.

9. When the SS has directed a shutdown to commence, allow reactor power to be reduced at least 5% before continuing to the next event. **IF** crew does not progress to shutdown, call as the Nuclear Engineer and recommend the crew shut down the reactor ASAP, and that Delta I can go out of band if required.

10. Place the camera or ERCS to monitor 12 SG WR level. Enter the feedwater rupture on 11 SG inside containment ***(Relative Order 4, Event Trigger #4)***.

a. The reactor will not trip automatically or manually until the DSS setpoint of 42.5% level on one SG is reached. The crew will enter E-0 then transition to FR-S.1.

b. The crew should direct local opening of the reactor trip breakers. WHEN DSS is actuated AND directed, remove the malfunction for the reactor trip breakers ***(Relative Order 4a)***. This ensures there is not excessive delay until bleed and feed cooling is required.

c. When directed to locally trip the turbine AND WR level on 12 SG is ~30%, then remove the turbine trip malfunction ***(Relative Order 4b)***. This ends the depressurization of 12 SG.

d. No AFW pumps will be running as #12 is OOS and #11 fails to start and then trips on overspeed when manually started ***(Relative Order 0, Event Trigger #5)***. If directed to investigate #11, report the overspeed trip mechanism has come off and you cannot get it back together. The TDAFWP will not be restored during this scenario.

e. If directed to cross-connect AFW from Unit 2, perform actions per 1C28.1 section 5.7, requesting Unit 1 to perform actions 5.7.1 and 5.7.5. Ten minutes after being directed to cross connect, report 2AF-13-1 is stuck

closed. Efforts to reopen it may be attempted but will not be successful.

f. 11 SG will continue to blow down to containment until empty.

g. Following isolation, the crew will return to E-0 step 2.

11. During E-0:

a. When directed, isolate Unit 1 MSR's and stop turbine building roof exhausters ***(Relative Order 6, Event Trigger #6)***.

b. Transition to FR-H.1 at step 11.

12. During FR-H.1:

a. It is NOT expected that bleed and feed criteria will be met upon entry.

– AFW pumps cannot be restored (12 OOS, 11 overspeed trip mechanism)

- Feedwater and condensate pumps cannot be started as SI reset PB does not work

b. IF I&C is contacted regarding the SI reset pushbuttons, respond that you will investigate and attempt to fix the problem. No action will be successful (if asked, there seems to be a wiring problem somewhere and you are continuing attempts).

13. Terminate the scenario at the direction of the Lead Evaluator once adequate bleed path is verified in step 14.

14. Direct the SS to complete PINGP 577 for the highest emergency classification reached. He may ask the board operators for information to help classify, but not receive help making the classification and notification.

15. Escort the applicants during followup and clarification questions. If another group will receive the same scenario, ensure exam security is maintained during the transition between scenarios.

Title: **2000 SRO NRC Exam Evaluation 'A'**	File Number: **Att. SRO-00-A** Rev: **0**

Name: _____ Position: SM SS Lead RO

Date: _____

Event Description	KA Number	KA Value
Failure of PT-485 Turbine Impulse Pressure Low	016 A2.01	3.0/3.1

Time	S/U	Position	Expected Response
		Lead/RO	• Identify PT-485 as a failed channel
		RO	• Place rods in MANUAL to stop rod insertion on failure.
		Lead/RO	• Refer to C47011:0405, FW System Trouble; C47013:0305, Auctioneered Tavg/Tref Deviation
		Lead	• Refer to 1C51.2, PT-485 Low Failure –Verify expected plant response – Direct RO to control Tavg at Tref with rods in MANUAL – Place steam dump in steam pressure mode – Verify SG level controlling in AUTO. – No Technical Specifications
		Lead/RO	• Trip bistable 1PC-485A with I&C assistance
		SS	• Brief event

Comments:

Event Description	KA Number	KA Value
Fuel Cladding Failure	004 A1.01	2.9/3.8

Time	S/U	Position	Expected Response
		Lead	Respond to High Rad Train B alarm - Verify 1R-9 alarming locally at Train B radiation monitoring panel. – Refer to C47048 1R-09
		Lead/SS	- Direct local survey at letdown monitor location. – Direct sampling of the RCS
Evaluator Note:			Sample and survey results will not be received until after the next event is complete.
Comments:			

Title: **2000 SRO NRC Exam Evaluation 'A'**	File Number: Att. SRO-00-A Rev: 0

Event Description	KA Number	KA Value
Letdown PCV Fails Closed on Pressure Xmtr Failure Low	004 A2.07	3.4/3.7

Time	S/U	Position	Expected Response
		RO	Respond to alarms for loss of letdown flow (order of ARP's not critical)
		Lead/RO	C47015:0608 Ltdn Relief Line to PRT Hi Temp - Attempt to open CV-31203 (failed closed, will work in manual but will not have pressure indication) - Monitor PRT level for increase - Monitor VCT level.
		SS/Lead	Diagnose failure closed of CV-31203 and dispatch operator to check. May direct isolation of letdown due to flashing.
		SS	Recognize entry condition for C12.1 AOP3 and direct transition OR direct securing letdown per C12.1 normal procedures
		RO	Perform actions in C12.1 AOP3 - Verify makeup controller in AUTO. – Verify auto makeup occurring if required. – Close letdown orifice isolation valves (CV-31325, 26 and 27). – Close letdown isolation valves (CV-31226, 31255) - Place charging pumps in MANUAL. – Establish one charging pump running with seal injection at 6-10 gpm per RCP and CV-31198 closed.
		Lead/RO	- Initiate CC flow to the excess letdown heat exchanger.
		Lead/SS	– Check R-9 reading less than 10R/hr.
		Lead/RO	– Establish excess letdown flow to the VCT
		RO	- Stabilize pressurizer level by adjusting CV-31210
		SS	- Minimize load changes
		SS	Conduct event brief

Evaluator Note: There is no direct transition to C12.1AOP3; crew needs to recognize normal letdown is lost due to failure and recognize entry conditions are met.

Comments:

Title: 2000 SRO NRC Exam Evaluation 'A'	File Number: Att. SRO-00-A Rev: 0

Event Description	KA Number	KA Value
Fuel Cladding Failure	004 A1.01	2.9/3.8

Time	S/U	Position	Expected Response
		Lead/SS	Receive results of local radiation survey (1R/hr at 1R-9 location)
		Lead/SS	Receive result of chemistry sample: RCS iodines (97 uCi/g)
		SS	Recognize sample results indicate fuel failure has occurred. – Notify Nuclear Engineer to implement 5AWI 12.1.1 - Refer to T.S. 3.1.D - Recognize DE I-131 above limit of Fig T.S. 3.1-3 - Direct shutdown of reactor and cooldown to below 500 degF within 6 hours **(critical task)**.
		SS	Consider classification per F3-2 (NUE, EAL reference 5A for sample exceeding TS limits on total activity) by classifying OR directing another SRO to investigate
		Lead/SS	Direct sampling of mixed bed demineralizer influent and effluent.
		Lead/SS	Direct HP's to survey auxiliary building
		SS	Conduct event brief, including shutdown and CVCS limitations

Evaluator Note: It is not required to do realtime classification and notification; if not done, do as followup question.
Critical task is to recognize TS required shutdown.

Comments:

Title: 2000 SRO NRC Exam Evaluation 'A'	File Number: Att. SRO-00-A Rev: 0

Event Description	KA Number	KA Value
Power Reduction per 1C1.4	2.2.2	4.0/3.5

Time	S/U	Position	Expected Response
		SS/RO	Predict reactivity and conduct prejob brief
		Lead	Notify duty chemist
		RO	-Turn on all pressurizer heaters -Transfer EH to IMP IN - Initiate boration OR insert rods -Turbine to GO
		Lead/SS	Change ERCS TPM to NIS mode
		RO	Maintain Tavg with 1.5 degF of Tref

Evaluator Note:

Comments:

Title: **2000 SRO NRC Exam Evaluation 'A'**	File Number: **Att. SRO-00-A** Rev: **0**

Event Description	KA Number	KA Value
Loss of Feedwater ATWS	054 AA2.01	4.3/4.4

Time	S/U	Position	Expected Response
		Lead/RO	Feedwater Rupture on 11 SG Inside Containment - FW/Stm mismatch noted - Reactor trip signal on 11 SG Lo Level
		RO	E-0/FR-S.1 Immediate Actions: Verify Reactor Trip - Recognize reactor not tripped - Attempt manual trip (breakers failed)
		Lead/RO RO	- Attempt DSS trip (circuit failed) - Check power >5% and transition to FR-S.1 - Verify automatic rod insertion or manually insert control rods **(critical task)**[1]
		Lead	FR-S.1 Immediate Actions - Verify turbine trip. – Check turbine stop valves closed (open due to failure) - Attempt manual trip of turbine (failed) - Manually close control valves (CV-3 sticks open) - Attempt to manually close both MSIV's (B MSIV will close automatically but not manually from the control room)
		SS	Readthru - E-0 step 1, Verify Reactor Trip - FR-S.1 step 1, Verify Reactor Trip, and 2, Verify Turbine Trip
		SS/Lead	Check AFW pumps running (12 OOS, 11 failed to start) - Attempts to manually start 11 AFWP (trips on start)
		RO	Initiate normal boration of RCS at maximum rate **(critical task)**[1] (Note: since charging is at minimum, must raise charging flow to 20 gpm total to achieve maximum rate with 75% BA flow limit of C12)
		SS/Lead	Dispatch operators to locally trip reactor and turbine

Evaluator Note: [1] Critical task met if negative reactivity inserted using rods or boron prior to exit of FR-S.1.

Comments:

Event Description	KA Number	KA Value
FR-S.1 Actions (Continued)		

Time	S/U	Position	Expected Response
		Lead	Check SG levels - Check if >10% (Att E) in one S/G - Verify feed flow >400 gpm - Attempt to align and start AFW pump (direct local investigation)
		Lead	Stop Reactor Makeup Pumps
		Lead/RO	Check for Uncontrolled Cooldown - Check SG pressures (11 is faulted, 12 is isolated when turbine trips) - Check RCS temperature stable or increasing (no, go to step 9)
		Lead	Check MSIV's closed - #12 will not close from control room, may close automatically after SI - May direct local closure
		SS/Lead	Identify 11 SG as faulted (and 12 SG if not isolated and turbine not tripped) - Isolate faulted SG (maintain >40 gpm AFW to each SG if both faulted)
		RO	Check core exit T/C's <1200 degF
		RO	Verify reactor subcritical.
		SS	Return to 1E-0 step 2

Comments:

Title: **2000 SRO NRC Exam Evaluation 'A'**	File Number: **Att. SRO-00-A** Rev: **0**

Event Description	KA Number	KA Value
E-0 Actions	2.4.6	3.1/4.0

Time	S/U	Position	Expected Response
		Lead	Verify turbine trip. (If not tripped locally, verify MSIV's closed)
		Lead	Verify safeguards buses energized.
		RO	Check if SI is actuated
		Lead	Verify safeguards component alignment - SI Not Ready lights not lit w/exceptions - SI Active lights lit w/exceptions - CI lights lit w/exceptions - Cat 1 doors closed
		SS	- Check Ops Log for vent openings
		Lead	- Check cooling water pressure >65 psig
		Lead/RO	Check Main Steamlines Isolated - Check MSIV's closed - If not closed, attempt closure and direct local closure - Check containment instrument air valves closed - If not, close if containment >17 psig
		Lead	Check containment pressure <23 psig - If not, verify containment spray actuation

Comments:

Event Description	KA Number	KA Value
E-0 Actions (continued)		

Time	S/U	Position	Expected Response
		SS	-Announce reactor trip and SI. -Notify SEC and Shift Manager
		Lead	Close CC to SFP MV-32115
		SS	Direct establishing continuous communication with the NRC
		Lead	-Open turbine HP drains -Notify outplant to stop roof exhausters and perform Att J
		Lead/RO	-Verify SI flow if <2080 psig –Verify RHR flow (not less than 130 psig)
		Lead	Verify AFW flow >200 gpm - Attempt/direct AFW start if not previously done - Transition to FR-H.1

Comments:

Title: 2000 SRO NRC Exam Evaluation 'A'	File Number: Att. SRO-00-A Rev: 0

Event Description	KA Number	KA Value
FR-H.1 Loss of Heat Sink requiring Bleed and Feed	054 AA1.04	4.4/4.5

Time	S/U	Position	Expected Response
		Lead/RO	Check if secondary heat sink is required - RCS pressure above any intact SG pressure - RCS hot leg temperature >350 degF
		Lead/RO	Check for secondary heat sink[1] - Wide Range level in either SG >7%(23%) - If not, stop both RCP's and go to step 9 - Przr Pressure <2335 psig - If not, check core dT; if decreasing, stop RCP's and go to step 9
		Lead/SS	Attempt to restore FW flow - Dispatch maintenance/syseng to repair 12 AFWP overspeed mechanism - Attempt cross connect to 21 AFWP and attempt to open stuck closed cross connect valve - Attempt to reset SI and start condensate/FW pumps (If start with SI active, will lock out)
		Lead/RO	Go to Step 9 when levels inadequate and Actuate SI
		Lead/RO	Verify RCS feed path - At least one pump running with proper alignment
		Lead	Reset CI
		Lead	Establish instrument air to containment
		RO	Establish RCS bleed path[2] **(critical task)** - Power available to block valves - Both block valves open - Opens both PORV's
		RO	Verify adequate RCS bleed path - PORV's both open - Block valves both open

Evaluator Note: [1]If bleed and feed conditions are not met yet, actions to attempt to restore AFW or MFW will be taken unsuccessfully until they are met per steps 2-8.
[2] Critical task met if both PORV's are opened

Comments:

Simulator Input Summary

Relative Order	System or Panel Drawing	TYPE	CODE	Severity or Value	Event Trigger	TIMING	DESCRIPTION
0		MFS	RP07				MECH FAILURE OF TRIP BKRS
0		IS	CP-1Y0501D	RESET			AMSAC ALARM OFF
0	C1-C22	ANN	M47014:0606B	DISABLE			AMSAC INACTIVE OFF
0		MFS	TC11B				TURB TRIP FAILURE
0		MFS	FW34				11AFW FAIL- AUTOSTART
0		MFS	TC04C				CV-3 FAILS OPEN
0	B1-B18	DI	DI-46182	OFF			SI RESET PB FAIL TRN A
0		DI	46447I	OFF			AMSAC INIT DISABLE
0		DI	DI-46159C	OFF			12 MSIV CS FAILS
0		MFS	FW33		5		AFWP OVERSPEED TRIP
0	EVENT TRIGGER	EVENT ACTION	hwzfws6426		5		AUTO/ TDAFWP START
0		DI	46316R	OFF			12 AFW DISCH VALVES
0		DI	46317R	OFF			TAGGED OUT
1		MFS	RX13A	0	1		PT485 FAIL LOW
1a		RF	RP181	TRIP			TURB POWER P7 PC-485A
2		DI	R09:S1P	ON	2		R-9 LEVEL SET TO 1R/HR
3		MFS	VC200	0	3		PRESS FAILS LOW
4		FW19A	FW19A	100	4		11FW BREAK-CTMT
4a		MFS	RP07	DELETE			LOCALLY TRIP TURBINE
4b		MFS	TC11B	DELETE			LOCALLY TRIP REACTOR
6		RF	MS108	CLOSED	6	+100	ISOLATE MSR'S
6		RF	MS109	CLOSED	6	+200	ISOLATE MSR'S
6		RF	MS110	CLOSED	6	+300	ISOLATE MSR'S
6		RF	MS111	CLOSED	6	+400	ISOLATE MSR'S

CHAMPS FORM KTF-D 2
RETENTION: 7 DAYS

UNIT 1 LPEO / PEO TURNOVER

DATE:
TIME:N(1800-0600)

SFGDS EQUIP OOS/LCO'S:
1 : D2 OOS FOR GENERATOR REPAIR 7 DAY PER 3.7.B.1
2 : 12 AFW PUMP OOS FOR BEARING REPLACEMENT 72 HR PER 3.4.B.2.B
3 :

RAD MONS OOS:	**ANNUNC'S OOS:**
OUTSTANDING SP'S:	**FIRE DET/PROT EQUIP IMPAIRMENT:**

OTHER EQUIP OOS / STATUS:
1 :
2 :
3 :
4 :
5 :
6 :
7 :
8 :
9 :
10 :
11 :
12 :
13 :
14 :
15 :
16 :
17 :

MAJOR EQUIPMENT REPAIRED/RETURNED TO SERVICE:
1 :
2 :
3 :
4 :
5 :

OPERATIONAL PLANS FOR COMING SHIFT:
1 : SEVERE THUNDERSTORM WATCH UNTIL 1800 FOR GOODHUE COUNTY
2 :
3 :
4 :

NEW PROCEDURES / INSTRUCTIONS:
1 :
2 :
3 :

WATCHSTANDERS LPEO: PEO:

LPEO RELIEVED BY:_____ TIME:_____ DATE: _____

PEO RELIEVED BY:_____ TIME:_____ DATE: _____

CB WALKDOWN --> LPEO: _____ TIME:_____

--> PEO : _____ TIME:_____

Facility: Prairie Island Generating Plant Date of Examination: 5/15-18/00

Examinations Developed by: (Facility) / NRC (circle one)

Target Date*	Task Description / Reference	Chief Examiner's Initials
-180	1. Examination administration date confirmed (C.1.a; C.2.a & b)	DGP / MEB
-120	2. NRC examiners and facility contact assigned (C.1.d; C.2.e)	DGP / MEB
-120	3. Facility contact briefed on security & other requirements (C.2.c)	DGP / MEB
-120	4. Corporate notification letter sent (C.2.d)	DGP / MEB
[-90]	[5. Reference material due (C.1.e; C.3.c)]	---
-75	6. Integrated examination outline(s) due (C.1.e & f; C.3.d)	DGP / MEB
-70	7. Examination outline(s) reviewed by NRC and feedback provided to facility licensee (C.2.h; C.3.e)	DGP / MEB
-45	8. Proposed examinations, supporting documentation, and reference materials due (C.1.e, f, g & h; C.3.d)	DGP / MEB
-30	9. Preliminary license applications due (C.1.l; C.2.g; ES-202)	DGP / MEB
-14	10. Final license applications due and assignment sheet prepared (C.1.l; C.2.g; ES-202)	DGP / MEB
-14	11. Examination approved by NRC supervisor for facility licensee review (C.2.h; C.3.f)	DGP / MEB
-14	12. Examinations reviewed with facility licensee (C.1.j; C.2.f & h; C.3.g)	DGP / MEB
-7	13. Written examinations and operating tests approved by NRC supervisor (C.2.i; C.3.h)	DGP / MEB
-7	14. Final applications reviewed; assignment sheet updated; waiver letters sent (C.2.g, ES-204)	DGP / MEB
-7	15. Proctoring/written exam administration guidelines reviewed with facility licensee and authorization granted to give written exams (if applicable) (C.3.k)	DGP / MEB
-7	16. Approved scenarios, job performance measures, and questions distributed to NRC examiners (C.3.i)	DGP / MEB

* Target dates are keyed to the examination date identified in the corporate notification letter. They are for planning purposes and may be adjusted on a case-by-case basis in coordination with the facility licensee.

[ ] Applies only to examinations prepared by the NRC.

Facility: Prairie Island Date of Examination: 5/15/00

Item	Task Description	Initials a	b*	c
1. WRITTEN	a. Verify that the outline(s) fit(s) the appropriate model per ES-401.	GW	A	MEG
	b. Assess whether the outline was systematically prepared and whether all knowledge and ability categories are appropriately sampled.	GW	A	MEG
	c. Assess whether the outline over-emphasizes any systems, evolutions, or generic topics.	GW	A	MEG
	d. Assess whether the repetition from previous examination outlines is excessive.	GW	A	MEG
2. SIM	a. Using Form ES-301-5, verify that the proposed scenario sets cover the required number of normal evolutions, instrument and component failures, and major transients.	GW	A	MEG
	b. Assess whether there are enough scenario sets (and spares) to test the projected number and mix of applicants in accordance with the expected crew composition and rotation schedule without compromising exam integrity; ensure each applicant can be tested using at least one new or significantly modified scenario, that no scenarios are duplicated from the applicants' audit test(s)*, and scenarios will not be repeated over successive days.	GW	A	MEG
	c. To the extent possible, assess whether the outline(s) conform(s) with the qualitative and quantitative criteria specified on Form ES-301-4 and described in Appendix D.	GW	A	MEG
3. W/T	a. Verify that: (1) the outline(s) contain(s) the required number of control room and in-plant tasks, (2) no more than 30% of the test material is repeated from the last NRC examination, (3)* no tasks are duplicated from the applicants' audit test(s), and (4) no more than 80% of any operating test is taken directly from the licensee's exam banks.	GW	A	MEG
	b. Verify that: (1) the tasks are distributed among the safety function groupings as specified in ES-301, (2) one task is conducted in a low-power or shutdown condition, (3) 40% of the tasks require the applicant to implement an alternate path procedure, (4) one in-plant task tests the applicant's response to an emergency or abnormal condition, and (5) the in-plant walk-through requires the applicant to enter the RCA.	GW	A	MEG
	c. Verify that the required administrative topics are covered, with emphasis on performance-based activities.	GW	A	MEG
	d. Determine if there are enough different outlines to test the projected number and mix of applicants and ensure that no items are duplicated on successive days.	GW	A	MEG
4. GENERAL	a. Assess whether plant-specific priorities (including PRA and IPE insights) are covered in the appropriate exam section.	GW	A	MEG
	b. Assess whether the 10 CFR 55.41/43 and 55.45 sampling is appropriate.	GW	A	MEG
	c. Ensure that K/A importance ratings (except for plant-specific priorities) are at least 2.5.	GW	A	MEG
	d. Check for duplication and overlap among exam sections.	GW	A	MEG
	e. Check the entire exam for balance of coverage.	GW	A	MEG
	f. Assess whether the exam fits the appropriate job level (RO or SRO).	GW	A	MEG

	Printed Name / Signature	Date
a. Author	G.D. WEALE G.D. Weale	1/28/00
b. Facility Reviewer(*)	James D. Lash James D. Lash	2/8/00
c. Chief Examiner	Michael E. Bielby Michael E. Bielby	2/25/00
d. NRC Supervisor	David E. Hills David E. Hills	2/27/00

(*) Not applicable for NRC-developed examinations.

* Received outline earlier than date previously agreed to with licensee. Chief Examiner informed licensee that nobody was scheduled on weekends to review at that time and that we would review in accordance with the schedule that they had previously agreed to.

Facility: PRAIRIE ISLAND Date of Examination: 5/15/00 Operating Test Number:

	1. GENERAL CRITERIA	Initials a	b	c
a.	The operating test conforms with the previously approved outline; changes are consistent with sampling requirements (e.g., 10 CFR 55.45, operational importance, safety function distribution).			
b.	There is no day-to-day repetition between this and other operating tests to be administered during this examination.			
c.	The operating test shall not duplicate items from the applicants' audit test(s)(see Section D.1.a).			
d.	Overlap with the written examination and between operating test categories is within acceptable limits.			
e.	It appears that the operating test will differentiate between competent and less-than-competent applicants at the designated license level.			
	2. WALK-THROUGH (CATEGORY A & B) CRITERIA	–	–	–
a.	Each JPM includes the following, as applicable: · initial conditions · initiating cues · references and tools, including associated procedures · validated time limits (average time allowed for completion) and specific designation if deemed to be time critical by the facility licensee · specific performance criteria that include: - detailed expected actions with exact criteria and nomenclature - system response and other examiner cues - statements describing important observations to be made by the applicant - criteria for successful completion of the task - identification of critical steps and their associated performance standards - restrictions on the sequence of steps, if applicable			
b.	The prescripted questions in Category A are predominantly open reference and meet the criteria in Attachment 1 of ES-301.	N/A	N/A	N/A
c.	Repetition from operating tests used during the previous licensing examination is within acceptable limits (30% for the walk-through) and do not compromise test integrity.			
d.	At least 20 percent of the JPMs on each test are new or significantly modified.			
	3. SIMULATOR (CATEGORY C) CRITERIA	–	–	–
a.	The associated simulator operating tests (scenario sets) have been reviewed in accordance with Form ES-301-4 and a copy is attached.			

	Printed Name / Signature	Date
a. Author	JOHN KEMPKES	5-1-00
b. Facility Reviewer(*)	Dennis Westphal	5-1-00
c. NRC Chief Examiner (*)	DANIEL LEFTON / Michael Bielby	5/10/00
d. NRC Supervisor (*)	David E. Hills	5/10/00

(*) The facility signature is not applicable for NRC-developed tests; two independent NRC reviews are required.

Facility: PRAIRIE ISLAND Date of Examination: 5/15/00 Operating Test Number:

	1. GENERAL CRITERIA	Initials a	Initials b	Initials c
a.	The operating test conforms with the previously approved outline; changes are consistent with sampling requirements (e.g., 10 CFR 55.45, operational importance, safety function distribution).	MH	DJW	
b.	There is no day-to-day repetition between this and other operating tests to be administered during this examination.	MH	DJW	
c.	The operating test shall not duplicate items from the applicants' audit test(s)(see Section D.1.a).	MH	DJW	
d.	Overlap with the written examination and between operating test categories is within acceptable limits.	MH	DJW	
e.	It appears that the operating test will differentiate between competent and less-than-competent applicants at the designated license level.	MH	DJW	
	2. WALK-THROUGH (CATEGORY A & B) CRITERIA	--	--	--
a.	Each JPM includes the following, as applicable: · initial conditions · initiating cues · references and tools, including associated procedures · validated time limits (average time allowed for completion) and specific designation if deemed to be time critical by the facility licensee · specific performance criteria that include: - detailed expected actions with exact criteria and nomenclature - system response and other examiner cues - statements describing important observations to be made by the applicant - criteria for successful completion of the task - identification of critical steps and their associated performance standards - restrictions on the sequence of steps, if applicable	MH	DJW	
b.	The prescripted questions in Category A are predominantly open reference and meet the criteria in Attachment 1 of ES-301.	NA	NA	
c.	Repetition from operating tests used during the previous licensing examination is within acceptable limits (30% for the walk-through) and do not compromise test integrity.	MH	DJW	
d.	At least 20 percent of the JPMs on each test are new or significantly modified.	MH	DJW	
	3. SIMULATOR (CATEGORY C) CRITERIA	--	--	--
a.	The associated simulator operating tests (scenario sets) have been reviewed in accordance with Form ES-301-4 and a copy is attached.	P	DJW	*

	Printed Name / Signature	Date
a. Author	Mark J Jones / [signature] JOHN KEMPKES [signature]	3-23-00
b. Facility Reviewer(*)	Dennis Westphal / [signature]	3-28-00
c. NRC Chief Examiner (*)	Michael E Bielby Sr / Michael E. Bielby Sr	5/MES
d. NRC Supervisor (*)		

(*) The facility signature is not applicable for NRC-developed tests; two independent NRC reviews are required.

* Comments on scenarios discussed with branch chief and licensee on 4/6/00
20% criteria and pre-exam comments discussed with branch chief and licensee on 4/20/00. M. Bielby / Michael E. Bielby Sr, D.L. PELTON / [signature], D.E. Hills / [signature]

New checklist developed by the licensee, dated 5/1/00 M. Bielby
Michael E. Bielby Sr 5/10/00

Facility: PRAIRIE ISLAND Date of Exam: 5/15/00 Scenario Numbers: / / Operating Test No.:

	QUALITATIVE ATTRIBUTES	Initials a	Initials b	Initials c	
1.	The initial conditions are realistic, in that some equipment and/or instrumentation may be out of service, but it does not cue the operators into expected events.	[illegible]	[illegible]	GAW MEB	
2.	The scenarios consist mostly of related events.	[illegible]	[illegible]	GAW MEB	
3.	Each event description consists of · the point in the scenario when it is to be initiated · the malfunction(s) that are entered to initiate the event · the symptoms/cues that will be visible to the crew · the expected operator actions (by shift position) · the event termination point (if applicable)	[illegible]	[illegible]	GAW MEB	
4.	No more than one non-mechanistic failure (e.g., pipe break) is incorporated into the scenario without a credible preceding incident such as a seismic event.	[illegible]	[illegible]	GAW MEB	
5.	The events are valid with regard to physics and thermodynamics.	[illegible]	[illegible]	GAW MEB	
6.	Sequencing and timing of events is reasonable, and allows the examination team to obtain complete evaluation results commensurate with the scenario objectives.	[illegible]	[illegible]	*	*
7.	If time compression techniques are used, the scenario summary clearly so indicates. Operators have sufficient time to carry out expected activities without undue time constraints. Cues are given.	N/A	N/A	N/A	
8.	The simulator modeling is not altered.	[illegible]	[illegible]	GAW MEB	
9.	The scenarios have been validated. Any open simulator performance deficiencies have been evaluated to ensure that functional fidelity is maintained while running the planned scenarios.	[illegible]	[illegible]	GAW MEB	
10.	Every operator will be evaluated using at least one new or significantly modified scenario. All other scenarios have been altered in accordance with Section D.4 of ES-301.	[illegible]	[illegible]		*
11.	All individual operator competencies can be evaluated, as verified using Form ES-301-6 (submit the form along with the simulator scenarios).	[illegible]	[illegible]	GAW MEB	
12.	Each applicant will be significantly involved in the minimum number of transients and events specified on Form ES-301-5 (submit the form with the simulator scenarios).	[illegible]	[illegible]	GAW MEB	
13.	The level of difficulty is appropriate to support licensing decisions for each crew position.	[illegible]	[illegible]		*

	TARGET QUANTITATIVE ATTRIBUTES (PER SCENARIO; SEE SECTION D.4.D)	Actual Attributes (A B C D)	–	–	–
1.	Total malfunctions (5-8)	① 11 / 7 / 9 / 8	[illegible]	[illegible]	GAW MEB
2.	Malfunctions after EOP entry (1-2)	5 / 2 / 5 / 4	[illegible]	[illegible]	GAW MEB
3.	Abnormal events (2-4)	3 / 2 / 2 / 2	[illegible]	[illegible]	GAW MEB
4.	Major transients (1-2)	1 / 1 / 2 / 2	[illegible]	[illegible]	GAW MEB
5.	EOPs entered/requiring substantive actions (1-2)	3 / 3 / 3 / 3	[illegible]	[illegible]	GAW MEB
6.	EOP contingencies requiring substantive actions (0-2)	3 / 2 / 2 / 2	[illegible]	[illegible]	GAW MEB
7.	Critical tasks (2-3)	3 / 3 / 4 / 3	[illegible]	[illegible]	GAW MEB

① HIGH NUMBER DUE TO NEED TO DRIVE TO BLEED & FEED.

* Comments on scenarios discussed with branch chief and licensee on 4/6/00 M. Bielby / Michael E. Bielby Sr., D.L. PELTON / [illegible], D.E. Hills, D.E. Hills

New checklist developed by the licensee dated 5/1/00 M. Bielby Michael E. Bielby Sr 5/10/00

Facility: PRAIRIE ISLAND Date of Exam: 5/15/00 Scenario Numbers: 1 / 2 Operating Test No.:

QUALITATIVE ATTRIBUTES		Initials a	b	c
1.	The initial conditions are realistic, in that some equipment and/or instrumentation may be out of service, but it does not cue the operators into expected events.			
2.	The scenarios consist mostly of related events.			
3.	Each event description consists of · the point in the scenario when it is to be initiated · the malfunction(s) that are entered to initiate the event · the symptoms/cues that will be visible to the crew · the expected operator actions (by shift position) · the event termination point (if applicable)			
4.	No more than one non-mechanistic failure (e.g., pipe break) is incorporated into the scenario without a credible preceding incident such as a seismic event.			
5.	The events are valid with regard to physics and thermodynamics.			
6.	Sequencing and timing of events is reasonable, and allows the examination team to obtain complete evaluation results commensurate with the scenario objectives.			
7.	If time compression techniques are used, the scenario summary clearly so indicates. Operators have sufficient time to carry out expected activities without undue time constraints. Cues are given.			
8.	The simulator modeling is not altered.			
9.	The scenarios have been validated. Any open simulator performance deficiencies have been evaluated to ensure that functional fidelity is maintained while running the planned scenarios.			
10.	Every operator will be evaluated using at least one new or significantly modified scenario. All other scenarios have been altered in accordance with Section D.4 of ES-301.			
11.	All individual operator competencies can be evaluated, as verified using Form ES-301-6 (submit the form along with the simulator scenarios).			
12.	Each applicant will be significantly involved in the minimum number of transients and events specified on Form ES-301-5 (submit the form with the simulator scenarios).			
13.	The level of difficulty is appropriate to support licensing decisions for each crew position.			

TARGET QUANTITATIVE ATTRIBUTES (PER SCENARIO; SEE SECTION D.4.D)		Actual Attributes	–	–	–
1.	Total malfunctions (5-8)	*1 1 7 1			
2.	Malfunctions after EOP entry (1-2)	*5 1 2 1			
3.	Abnormal events (2-4)	3 1 2 1			
4.	Major transients (1-2)	1 1 1 1			
5.	EOPs entered/requiring substantive actions (1-2)	3 1 3 1			
6.	EOP contingencies requiring substantive actions (0-2)	3 1 2 1			
7.	Critical tasks (2-3)	3 1 3 1			

* HIGHER THAN NORMAL DUE TO DIFFICULTY OF REACHING MAJOR TRANSIENT/RECOVERY PATH

Scenario # 2 has 1 event deleted, Total Malf = 6 vice 7. M Bielby

Michael F Bielby 5/10/00

OPERATING TEST NO.:

Applicant Type	Evolution Type	Minimum Number	Scenario Number			
			1	2	3	4
RO	Reactivity	1				
	Normal	1				
	Instrument	2				
	Component	2				
	Major	1				
As RO	Reactivity	1				
	Normal	0				
	Instrument	1				
	Component	1				
	Major	1				
SRO-I						
As SRO	Reactivity	0				
	Normal	1				
	Instrument	1				
	Component	1				
	Major	1				
SRO-U	Reactivity	0	4	2		
	Normal	1	4	1		
	Instrument	1	1	2		
	Component	1	2,3	3		
	Major	1	5	4		

Instructions: (1) Enter the operating test number and Form ES-D-1 event numbers for each evolution type.
(2) Reactivity manipulations may be conducted under normal or *controlled* abnormal conditions (refer to Section D.4.d) but must be significant per Section C.2.a of Appendix D.

Author:

Chief Examiner: DAVID L. PELTON Michael R. Bielby

Competencies	~~Applicant #1~~ RO/SRO-I/~~SRO-U~~ SCENARIO 1				~~Applicant #2~~ RO/SRO-I/~~SRO-U~~ SCENARIO 2				Applicant #3 RO/SRO-I/SRO-U SCENARIO			
	SS 1	LEAD 2	3	4	LEAD 1	SS 2	3	4	1	2	3	4
Understand and Interpret Annunciators and Alarms	1, 2, 3, 5	2, 3			3, 5	2, 3						
Diagnose Events and Conditions	1, 2, 3, 5	2, 3			2, 3, 5	2, 3						
Understand Plant and System Response	1, 2, 3, 5	2, 3			2, 3, 5	2, 3						
Comply With and Use Procedures (1)	1, 2, 3	1, 2, 3			2, 3, 4	2, 3						
Operate Control Boards (2)	–	1			4	–						
Communicate and Interact With the Crew	2, 4, 5	1, 2, 3			3, 4	1, 2, 3, 4						
Demonstrate Supervisory Ability (3)	2, 3, 4, 5	–			–	1, 2, 3, 4						
Comply With and Use Tech. Specs. (3)	3	–			–	2, 3						

Notes:

(1) Includes Technical Specification compliance for an RO.
(2) Optional for an SRO-U.
(3) Only applicable to SROs.

Instructions:

Circle the applicant's license type and enter one or more event numbers that will allow the examiners to evaluate every applicable competency for every applicant.

Author: 5-1-00
Chief Examiner: DAVID L. PELTON / Michael Bielby / 5/10/00

* Event 5 deleted on Scenario #2

Facility:	Date of Exam:	Exam Level: RO/SRO

	Item Description	Initial a	b*	c*
1.	Questions and answers technically accurate and applicable to facility			
2.	a. NRC K/As referenced for all questions b. Facility learning objectives referenced as available			
3.	RO/SRO overlap is no more than 75 percent, and SRO questions are appropriate per Section D.2.d of ES-401			
4.	No more than 25 questions are duplicated from [practice exams, quizzes, and] the last two NRC licensing exams; enter the actual number of duplicated questions at right: NRC = 0, Other = 0			
5.	[No (~~Less than 5 percent~~) question duplication from the license screening/audit exam (if independently written)]			
6.	Bank use meets limits (no more than 50 percent from the bank, at least 10 percent new, and the rest modified); enter the actual question distribution at right: Bank = 13, Modified = 22, New = 65			
7.	Between 50 and 60 percent of the questions on the exam (including 10 new questions) are written at the comprehension/analysis level; enter the actual question distribution at right: Memory = 49, C/A = 51			
8.	References/handouts provided do not give away answers			
9.	Question distribution meets previously approved examination outline; deviations are justified			
10.	Question psychometric quality and format meet ES, Appendix B, guidelines			
11.	The exam contains 100, one-point, multiple choice items; the total is correct and agrees with value on cover sheet			

	Printed Name / Signature	Date
a. Author	John Kemples	5-1-00
b. Facility Reviewer(*)	Dennis Westphal	5-1-00
c. NRC Chief Examiner(*)	DAVID L. PELTON / Michael E. Bielby	5/10/00
d. NRC Regional Supervisor(*)	David Hills	5/10/00

Note: * The facility reviewer's signature is not applicable for NRC-developed examinations; two independent NRC reviews are required.
See special instructions (Section E.2.c) for Items 1, 4, 5, and 6.
[ ] The items in brackets do not apply to NRC-prepared examinations.

Facility: PRAIRIE ISLAND | Date of Exam: 5-17-00 | Exam Level: ~~RO~~/SRO

	Item Description	Initial a	Initial b*	Initial c*
1.	Questions and answers technically accurate and applicable to facility			
2.	a. NRC K/As referenced for all questions b. Facility learning objectives referenced as available			
3.	RO/SRO overlap is no more than 75 percent, and SRO questions are appropriate per Section D.2.d of ES-401	N/A	N/A	
4.	No more than 25 questions are duplicated from [practice exams, quizzes, and] the last two NRC licensing exams; enter the actual number of duplicated questions at right: NRC = 0, Other = 0			
5.	(No) (~~Less than 5 percent~~) question duplication from the license screening/audit exam (if independently written)]			
6.	Bank use meets limits (no more than 50 percent from the bank, at least 10 percent new, and the rest modified); enter the actual question distribution at right: Bank = 14, Modified = 23, New = 63			
7.	Between 50 and 60 percent of the questions on the exam (including 10 new questions) are written at the comprehension/analysis level; enter the actual question distribution at right: Memory = 45, C/A = 55			
8.	References/handouts provided do not give away answers			
9.	Question distribution meets previously approved examination outline; deviations are justified			
10.	Question psychometric quality and format meet ES, Appendix B, guidelines			
11.	The exam contains 100, one-point, multiple choice items; the total is correct and agrees with value on cover sheet			

	Printed Name / Signature	Date
a. Author	JOHN KEMPKES /	3-23-00
b. Facility Reviewer(*)	Dennis Westphal /	3-23-00
c. NRC Chief Examiner(*)		
d. NRC Regional Supervisor(*)		

Note: * The facility reviewer's signature is not applicable for NRC-developed examinations; two independent NRC reviews are required.
See special instructions (Section E.2.c) for Items 1, 4, 5, and 6.
[ ] The items in brackets do not apply to NRC-prepared examinations.

20% criteria and pre exam comments discussed with branch chief and licensee on 4/20/00. M. Bielby / Michael E. Bielby S.; D.L. PELTON / [signature], D.E. Hills / [signature]

New QA sheets developed by the licensee, dated 5/1/00. M. Bielby / Michael E. Bielby 5/6/00

Q#	1. LOK (F/H)	2. LOD (1-5)	3. Psychometric Flaws					4. Job Content Flaws				5.	6.
			Stem Focus	Cues	T/F	Cred. Dist.	Partial	Job-Link	Minutia	#/ units	Back-ward	U/E/S	Explanation
8	F	2										S	B.
9	H	3				X						S	N. B also correct. Review of C12.5 AOP1 indicated that answer B would not be an additional correct answer.
10	H	2	X									U	N. No correct answer was provided. Modified the stem to state that "for PRA reasons, unit CC pumps cannot be cross-connected." This ensured a correct answer existed.
12	H	3										S	M.
15	H	3										S	N.
18	H	3				X						S	N. Not SRO only, 41(b)(13); D also correct. Review of reference material indicated that D would not be an additional correct answer.
22	F	2						X	X			U	N. Not SRO only; KA does not apply. Significantly modified the stem to provide plant conditions and status tree conditions then asked for the procedure to which the applicant would transition. This resulted in the K/A matching the question as well as upgrading the question to an "S" level.
25	H	2										S	M.

Instructions
[Refer to Appendix B for additional information regarding each of the following concepts.]

1. Enter the level of knowledge (LOK) of each question as either (F)undamental or (H)igher cognitive level.

2. Enter the level of difficulty (LOD) of each question using a 1 - 5 (easy - difficult) rating scale (questions in the 2 - 4 range are acceptable).

3. Check the appropriate box if a psychometric flaw is identified:
   - The stem lacks sufficient focus to elicit the correct answer (e.g., unclear intent, more information is needed, or too much needless information).
   - The stem or distractors contain cues (i.e., clues, specific determiners, phrasing, length, etc).
   - The answer choices are a collection of unrelated true/false statements.
   - More than one distractor is not credible.
   - One or more distractors is (are) partially correct (e.g., if the applicant can make unstated assumptions that are not contradicted by stem).

4. Check the appropriate box if a job content error is identified:
   - The question is not linked to the job requirements (i.e., the question has a valid K/A but, as written, is not operational in content).
   - The question requires the recall of knowledge that is too specific for the closed reference test mode (i.e., it is not required to be known from memory).
   - The question contains data with an unrealistic level of accuracy or inconsistent units (e.g., panel meter in percent with question in gallons).
   - The question requires reverse logic or application compared to the job requirements.

5. Based on the reviewer's judgment, is the question as written (U)nacceptable (requiring repair or replacement), in need of (E)ditorial enhancement, or (S)atisfactory?

6. For any "U" ratings, at a minimum, explain how the Appendix B psychometric attributes are not being met.

Q#	1. LOK (F/H)	2. LOD (1-5)	3. Psychometric Flaws					4. Job Content Flaws				5. U/E/S	6. Explanation
			Stem Focus	Cues	T/F	Cred. Dist.	Partial	Job-Link	Minutia	#/ units	Back-ward		
26	H	2		X								S	N. Not SRO only, 41(b)(10); can eliminate 3 distractors knowing effects of rapid PZR pressure drop; E-get rid of "expected." After discussion with the licensee, determined that the distractors were not so easily identified.
31	F	2										S	N.
32	H	3										S	N.
36	F	2										S	N.
38	F	2										E	B. Insert ""completely" before "stop"; Capitalize "stop." Licensee acknowledged enhancement comment.
40	F	3										S	B.
44	H	3										S	N.
45	F	2					X					U	N. LOK=F; D and C also correct. Modified distractor D to make it incorrect.
50	H	2					X					U	N. D also correct. Modified answer D to be incorrect and acknowledged enhancement comment.
57	F	2					X					U	N. LOK=F; A and B also correct; E-delete "is limited" in stem. Modified distractor D to be incorrect and acknowledged enhancement comment.
59	F	2										S	N.
61	F	3					X					U	N. LOK=F. The question was changed to acknowledge a memory level and acknowledged enhancement comment. Another "memory level" question was modified to meet the NUREG-1021 minimum number of cognitive/analysis level questions.
62	F	2				X						E	N. Add "and the Hi Rad outputs are disabled" to A and C to make choices similar. Licensee acknowledged enhancement comment.
63	H	3										S	N. How does Tref equate to program Tavg? Based on a review of reference material, Tref equates to Tavg via a formula that considers changes to Pimp.
69	F	2										S	N. Licensee acknowledged enhancement comment.
73	H	2										E	N. E-insert and capitalize "normal" before "effluent" in the stem. Licensee acknowledged enhancement comment.
79	F	2										S	B.
81	H	1				X						U	N. LOD=1; 3 distractors not believable; REWRITE/REPLACE. The question was satisfactorily replaced.
83	F	2										U	B. LOK=F; KA not apply; can eliminate B and D; state "normal lineup" in stem REPLACE/REWRITE. Modified distractors B and D to make them plausible. Modified the stem given information to be consistent with the new distractors.

Q#	1. LOK (F/H)	2. LOD (1-5)	3. Psychometric Flaws					4. Job Content Flaws				5. U/E/S	6. Explanation
			Stem Focus	Cues	T/F	Cred. Dist.	Partial	Job-Link	Minutia	#/ units	Back-ward		
91	H	3										S	M.
94	F	1										U	N. LOD=1; D also correct, procedure says "should." Modified the stem to reference a RWP that will also be provided to the applicant during the exam. The RWP lists the TLD placement requirements and precludes the distractors from being correct.
100	F	2										S	M.

Q#	1. LOK (F/H)	2. LOD (1-5)	3. Psychometric Flaws					4. Job Content Flaws				5. U/E/S	6. Explanation
			Stem Focus	Cues	T/F	Cred. Dist.	Partial	Job-Link	Minutia	#/ units	Back-ward		
1	F	2							X			S	N. Not SRO only, 41(b)(10); don't need given information
2	F	2		X								S	N. LOK=F; GFE theory type question; delete "Fuel Temperature" in stem, could give away distractors C and D. Changed stem to simply state "Doppler Coefficient." Also modified distractors C and D to be consistent with the format of distractors A and B.
3	H	2							X			S	M. Not SRO only, 41(b)(5); given info not required to answer question. The question requires the applicant to make an "operability call" then refer to the COLR. The question was left a "S" level question verses a "B" level.
4	F	2					X					U	M. A and B also correct. Distractors A, B, and C were replaced to ensure only one correct answer.
5	F	1										S	N. Not SRO only 41(b)(3); GFE type question. The question was changed from a "S" level to a "B" level.
6	H	3					X					S	M. D also correct; E-replace "should." Based on a review of reference material, distractor D was not a correct answer. Licensee Acknowledged enhancement comment.
7	F	2										E	M. more performance based to give scenario with parameters and require correct actions. Licensee Acknowledged enhancement comment.
11	F	3					X					U	N. C also correct based on lack of explanation/references. N-41 thru 44 was also a correct answer. These NIs are not EQ instruments therefore they cannot be relied upon under adverse containment conditions. Modified the stem to place the containment in an adverse condition (i.e., introduce a LBLOCA) which precludes the use of N-41 thru N-44 from being a correct answer.
13	F	2										S	M. No correct answer based on lack of explanation/references. Based on a review of the reference material, the indicated correct answer IS the correct answer.
14	F	2										S	N. no correct answer based on lack of explanation/references. Based on a review of the reference material, the indicated correct answer IS the correct answer.
16	F	2										S	N.
17	F	2										S	M. LOK=F
19	F	2										E	N. Capitalize "not"; spell out "CL"; define "long period." Licensee Acknowledged enhancement comment.
20	F	2										S	M.
21	F	2										S	N.
23	F	2				X	X					U	M. LOK=F; C and D not creditable. Significantly modified the question to provide plant conditions and modified distractors C and D to be plausible.

Q#	1. LOK (F/H)	2. LOD (1-5)	3. Psychometric Flaws					4. Job Content Flaws				5. U/E/S	6. Explanation
			Stem Focus	Cues	T/F	Cred. Dist.	Partial	Job-Link	Minutia	#/ units	Back-ward		
24	F	2										U	N. LOK=F; KA not apply, COG LVL. Modified the stem to upgrade the question from memory level to comprehension level. Also incorporated high coolant activity into the stem (i.e., matched the question to the applicable K/A).
27	F	2										S	N. LOK=F; not SRO only, 41(b)(2)
28	H	3										S	M. Steam tables required for reference
29	F	2										S	N.
30	F	2										S	N. LOK=F; GFE type question; don't need stem information
33	F	2										S	N. LOK=F; not SRO only, 41(b)(5); don't need given information
34	F	2										S	N.
35	F	2										S	N. LOK=F; more given info required, 21 pump available?
37	F	2										S	M. LOK=F
39	F	2				X						U	M. LOK=F; reference for priorities? Priority is determined based on knowledge of monitor responses and EPIP entry conditions. Modified the question such that there is a correct answer.
41	F	2										S	N. LOK=F
42	F	2										S	B.
43	H	3										S	N.
46	F	2										S	M.
47	F	2										U	B. LOK=F, COG LVL. The question was changed to acknowledge a memory level. Another "memory level" question was modified to meet the NUREG-1021 minimum number of cognitive/analysis level questions.
48	F	2										S	N.
49	H	2										S	M.
51	F	2			X		X					S	N. A and D also correct; E-replace "most" and "could"; spell out CFCU. Based on a review of the reference material, distractors A and D are not correct but are plausible. Licensee Acknowledged enhancement comment.
52	F	2										S	N.
53	F	2										S	M.

Q#	1. LOK (F/H)	2. LOD (1-5)	3. Psychometric Flaws					4. Job Content Flaws				5. U/E/S	6. Explanation
			Stem Focus	Cues	T/F	Cred. Dist.	Partial	Job-Link	Minutia	#/ units	Back-ward		
54	H	3										S	N.
55	F	2										S	N.
56	F	2										S	B. LOK=F.
58	F	2										S	M.
60	F	2										U	N. LOK=F, COG LVL. The question was changed to acknowledge a memory level. Another "memory level" question was modified to meet the NUREG-1021 minimum number of cognitive/analysis level questions.
64	F	2										S	N. LOK=F.
65	F	2										S	N.
66	F	2										S	N. Reference discusses turbine runback in terms of OTDT not deltaT, explain.
67	F	2										S	N. LOK=F.
68	F	2										U	N. B listed as subsequent, not initial action; "announce" = "evacuate"?; replace "should." The question was satisfactorily modified.
70	F	1										U	N. LOK=F; LOD=1; what is "refueling water level"? Significantly modified the question to bolster the level of knowledge and difficulty.
71	F	2										S	N.
72	F	3										S	B. Need explanation.
74	F	2										U	N. LOK=F, COG LVL. The question was changed to acknowledge a memory level. Another "memory level" question was modified to meet the NUREG-1021 minimum number of cognitive/analysis level questions.
75	H	2										U	N. LOK=F, COG LVL. The question was changed to acknowledge a memory level. The question was modified to meet the NUREG-1021 minimum number of cognitive/analysis level questions.
76	F	2										S	N.
77	F	2										S	N.
78	F	2										U	N. LOK=F, COG LVL. The question was changed to acknowledge a memory level. Another "memory level" question was modified to meet the NUREG-1021 minimum number of cognitive/analysis level questions.
80	H	3										S	B.

Q#	1. LOK (F/H)	2. LOD (1-5)	3. Psychometric Flaws					4. Job Content Flaws				5. U/E/S	6. Explanation
			Stem Focus	Cues	T/F	Cred. Dist.	Partial	Job-Link	Minutia	#/ units	Back-ward		
82	H	3					X					S	N. C also correct. Based on a review of the reference material, distractor C is not a correct answer but is plausible.
84	H	2	X		X							U	B. Stem not focused; 3 distractors collection of T/F statements; REWRITE. Distractors B and D improved. Distractor C okay as-is.
85	F	2			X							U	M. LOK=F,COG LVL. The question was changed to acknowledge a memory level. Another "memory level" question was modified to meet the NUREG-1021 minimum number of cognitive/analysis level questions.
86	F	1					X					U	N. LOK=F, LOD=1, not SRO only, multiple correct answers. REPLACE/REWRITE. Modified distractor C to be incorrect. The question was changed to reflect a level of "B," the question was changed to acknowledge a memory level and the licensee acknowledged the enhancement comment.
87	F	2										S	M.
88	F	2			X	X						S	N. Not SRO only; A, C, and D may not be plausible, collection of T/F statements; E-capitalize "must, shall, and only." Upon further review and discussion with the licensee, question sat-as-is.
89	F	2										U	N. LOK=F; COG LVL, clarify "late date." The question was changed to acknowledge a memory level. Another "memory level" question was modified to meet the NUREG-1021 minimum number of cognitive/analysis level questions and the licensee acknowledged the enhancement comment.
90	F	2				X						U	N. LOK=F; if know work order is not to be closed, then know A is correct; E-replace "should." The question was satisfactorily modified.
92	F	2										S	B.
93	F	3										U	N. LOK=F, COG LVL, E; delete "should." The question was changed to acknowledge a memory level. Another "memory level" question was modified to meet the NUREG-1021 minimum number of cognitive/analysis level questions and the licensee acknowledged the enhancement comment.
95	F	2										S	B.
96	F	3					X					S	M. Not SRO only, A also correct. Based on review of the reference material, answer A IS incorrect. The question was changed to reflect a level of "B."
97	H	2			X							S	M. Can eliminate D, because if it was correct, then A and B would also be correct. Answers A and B modified using the word "only." This made distractor D plausible.
98	F	2					X					U	N. D also correct. The question was satisfactorily modified.
99	F	2										S	B.

Facility:	Date of Exam:	Exam Level: RO/SRO		
		Initials		
	Item Description	a	b	c
1.	Answer key changes and question deletions justified and documented			
2.	Applicants' scores checked for addition errors (reviewers spot check > 25% of examinations)			
3.	Grading for all borderline cases (80% +/- 2%) reviewed in detail			
4.	All other failing examinations checked to ensure that grades are justified			
5.	Performance on missed questions checked for training deficiencies and wording problems; evaluate validity of questions missed by half or more of the applicants			

	Printed Name / Signature	Date
a. Grader	JOHN KEMPKES	5-17-00
b. Facility Reviewer(*)		5/17/00
c. NRC Chief Examiner (*)	DAVID L. PELTON / Michael E. Bielby	5/26/00 5/26/00
d. NRC Supervisor (*)	David E. Hills /	6/19/00

(*) The facility reviewer's signature is not applicable for examinations graded by the NRC; two independent NRC reviews are required.

Northern States Power Company

Prairie Island Nuclear Generating Plant
1717 Wakonade Drive East
Welch, Minnesota 55089

May 17, 2000

Michael Bielby, Chief Examiner
U.S. Nuclear Regulatory Commission
801 Warrenville Road
Lisle, IL 60532-4351

Dear Mr. Bielby:

This letter is to report grading on the facility written SRO written exam administered on May 15, 2000.

The exam as approved is accepted with one change:

> Question #59 Accepted answer B as well as original answer A. Upon review, it was determined from Logic Diagram NF-40751-18 that if the compressor was started in AUTO a pressure switch would start the compressor at 2.3 psig WG header pressure and stop the compressor at 1.5 psig. If the compressor was started in MANUAL, the auto stop is disabled. The stem of the question stated the WGC was running, but not whether it was running in AUTO or MANUAL. See logic (Att A).

This change affected two candidates (Baartman and Strain), increasing their scores by one point.

The facility grading for the written is as follows:

Dale Johnson	83
Todd Strain	81
Jeff Baartman	81
Michael Murphy	72

Facility graded answer sheets and cover sheets, along with "clean" copies of the original answer sheets as turned in by the candidates, are enclosed in Att. B.

If you have any questions, please contact me at (651) 388-1165 extension 5031.

Sincerely,

John Kempkes
Prairie Island Operations Training
Initial Training Lead

Att: A. Logic Diagram NF-40751-18, 121 WGC control logic
B. Exam Cover Sheets and Answer sheets (4 sets, graded and clean)
C. Proctor Notes and Seating Chart
D. Form ES-403-1 Written Examination Grading Quality Checklist
E. 2000 SRO Written Examination as given to candidates

Handed to M. Bielby on
5-18-2000.

Northern States Power Company

Prairie Island Nuclear Generating Plant
1717 Wakonade Drive East
Welch, Minnesota 55089

May 22, 2000

To: Michael Bielby, Lead Examiner
U. S. Nuclear Regulatory Commission
Region III
801 Warrenville Road
Lisle, Illinois 60532-4351

From: Dennis Westphal, Operations Training Superintendent
Prairie Island Training Center
1660 Wakonade Drive West
Welch, MN 55089

Subject: Comment/Clarification on Job Performance Measure ADMIN 4 S

Mike:

Three of four SRO Upgrade candidates during the May 15-19 SRO upgrade exam classified the static simulated event in this JPM as a Site Area Emergency. The following details describe how they came to this conclusion.

Note that this administrative JPM was modified from the original submittal to expand the scope and be administered on the simulator.

1. Simulator Initial conditions were such that no Safety Injection nor Auxiliary Feed were possible. This was intended to support a General Emergency classification. However, the authors did nothing to preclude Main Feedwater restoration, in that power was available to the pumps and there were no failures apparent to the candidates. If a candidate determined that Main Feed water was available, they may not determine it to be "lost" when reading the F3-2 classification descriptions.

2. Initial conditions provided to the examinees stated that the crew had just entered FR-H.1 Loss of Secondary Heat Sink procedure. From candidate experience with the procedure, they could reasonably conclude that main feedwater to the steam generators would be restored by procedure within a few minutes. One candidate stated to the examiner that he would have to upgrade to a General Emergency if main feedwater could not be established.

3. General Emergencies in general require events to be in progress or have occurred which involve actual or imminent substantial core degradation or melting with potential for release to the public. The simulator conditions did not support (i.e. core not uncovered) an immediate danger, so the classification would be made based on the expected progress of the event. If one assumed that Main Feedwater could not be restored or that the candidate must classify based on current conditions without allowance for future operator actions, then a General Emergency is justified (F-3

condition 7 page 25 attached). If, however, the candidate recognizes Main Feedwater and thus heat sink can be restored, they would be justified in declaring a Site Area Emergency based on existing plant conditions (F-3 condition 12 page 41).

4. A Site Area Emergency does not require a Protective Action Recommendation.

5. Based on the setup of the approved JPM, Prairie Island recommends that a declaration of Site Area Emergency with a PAR of "None" be accepted in addition to the answer in the approved JPM.

Sincerely,

Dennis Westphal

JOB PERFORMANCE MEASURE WORKSHEET

TASK TITLE: PERFORM INTERIM EMERGENCY DIRECTOR ACTIONS

JPM NUMBER: ADMIN-4S **REV.** 0

RELATED PRA INFORMATION (SEE PITC 2.3): None

TASK NUMBERS: SS 3440230303

K/A NUMBERS: 2.4.38

APPLICABLE METHOD OF TESTING:

Simulate Performance: [ ] Actual Performance: [x]

Evaluation Location: Turbine Building: [ ] Auxiliary Building: [ ]

Simulator: [x] Control Room: [ ]

Other: [ ]

Time for Completion: 10 Minutes Time Critical: **NO**

TASK APPLICABILITY: (Check all that apply) SRO: [x] RO: [ ] NLO: [ ]

PREPARED BY: Mark Jones **DATE:** 4/26/00

APPROVED BY: 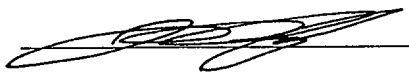 **DATE:** 5-8-00

Operator: _____ **(SRO / RO / NLO)**

Evaluator: _____

Date: _____

READ TO THE OPERATOR

I will explain the initial conditions, which step(s) to simulate or discuss, and provide initiating cues. When you complete the task successfully, the objective for this job performance measure will be satisfied.

INITIAL CONDITIONS:

- Unit 1 has experienced a loss of feedwater ATWS.
- The crew has just entered FR-H.1.
- The SEC has been summoned to the Control Room and has completed the Meteorological Data on PINGP 577.

INITIATING CUES:

- The SM/ED directs you as the Unit 2 SS to assume interim ED responsibilities, classify the event, and complete the PINGP 1125, "ED Checklist".

JPM PERFORMANCE INFORMATION

Required Materials: PINGP 577 with section 2.2 filled in as follows:

a. Wind Speed = 12 mph
b. Wind Direction (from) = 348°
c. Temperature = 61 °F
d. Precipitation = No
e. Stability Class = C circled
f. Affected Sectors = FGHJK.

General References: F3-2, F3-4, PINGP 1125, and PINGP 577

Task Standards: Event classified as a General Emergency, PING 1125 initiated, PINGP 577 completed and delivered to the SEC, and PA announcement made.

Start Time: _____

NOTE: When providing "Evaluator Cues" to the examinee, care must be exercised to avoid prompting the examinee. Typically cues are only provided when the examinee's actions warrant receiving the information (i.e. the examinee looks or asks for the indication).

NOTE: Critical steps are marked with an "X" below the performance step number. Failure to meet the standard for any critical step shall result in failure of this JPM.

Performance Step: **Critical __X__ (S-1)**	Classify the event per F3-2.
Standard:	Event classified as a General Emergency under EAL Reference Manual Condition Number 7E or 20F.
Evaluator Note:	**It is expected that no more than 15 minutes will be required to classify the event, complete form PINGP 577, "Emergency Notification Report Form", and give the form to the SEC to complete notifications.**
Evaluator Cue:	**If asked as Unit 2, inform examinee that, "21 AFWP is OOS."**
Performance:	**SATISFACTORY _____ UNSATISFACTORY _____**
Comments:	_____

Performance Step: **Critical __X__ (S-1)**	Fills in the time of event declaration at the top of PINGP 1125.
Standard:	Declaration time filled in.
Evaluator Note:	**Procedurally, once the classification of General Emergency has been made, F3-2 implements F3-4, which implements form PINGP 1125, " Shift Manager/Shift Supervisor Emergency Director Checklist", which implements form PINGP 577, "Emergency Notification Report Form". Examinee will probably implement forms PINGP 577 and PINGP 1125 without procedural reference.**
Performance:	**SATISFACTORY _____ UNSATISFACTORY _____**
Comments:	_____

Performance Step: **Critical X (S-1)**	Assume the role of Emergency Director (F3-4).
Standard:	Initials and writes in the time that the ED role was assumed.
Evaluator Cue:	**If asked when the ED role was assumed, inform examinee that, "the ED role was assumed 10 minutes before event declaration."**
Performance:	**SATISFACTORY** _____ **UNSATISFACTORY** _____
Comments:	_____

Performance Step: **Critical X (S-1)**	Ensure the SEC has been summoned and starts the completion of the notification report form (PINGP 577).
Standard:	Initials and writes in the time that the SEC was summoned.
Evaluator Cue:	**If asked when the SEC was summoned, inform examinee that, "the SEC was summoned to the control room 5 minutes before event declaration."**
Performance:	**SATISFACTORY** _____ **UNSATISFACTORY** _____
Comments:	_____

Performance Step: **Critical __X__ (S-2)**	Recommend evacuation for the general public on PINGP 577 as designate in Figure 1, F3-8.1. • If wind ≥ 5 mph, then evacuate a 2 mile radius and 5 miles downwind and monitor radio/TV.
Standard:	Since wind speed is 12 mph, fills in protective action recommendation for evacuation of all sectors out to 2 miles, FGHJK sectors out to 5 miles, and circles subareas 5E and 5S.
Performance:	**SATISFACTORY** _____ **UNSATISFACTORY** _____
Comments:	_____

Performance Step: **Critical __X__ (S-3)**	Review and approve the notification report form PINGP 577.
Standard:	PINGP 577 completed and signed for approval as follows: • 1.1 (b) checked. • 1.2 (a) and (d) checked, time and date filled in. • 1.3 (a) checked. • 1.4 (a) filled in by previous step. • 2.1 indicates event related to Unit 1, EAL is 7E or 20F, and appropriate EAL sticker affixed. • 2.2 previously filled in by SEC, as given in JPM Initial Conditions. • 2.3 signed by examinee as interim ED.
Performance:	**SATISFACTORY** _____ **UNSATISFACTORY** _____
Comments:	_____

Performance Step: **Critical X (S-4)**	Direct the SEC to complete the notifications of state and local agencies and, if not already performed, activate the NSP Emergency Response Organization in accordance with F3-5 and PINGP 580.
Standard:	PINGP 577 given to the SEC with the direction to complete notifications of state and local agencies within 15 minutes of event declaration and to activate the NSP Emergency Response Organization in accordance with F3-5 and PINGP 580.
Evaluator Cue:	**When examinee indicates that he/she would give the PINGP 577 to the SEC with direction for notifications, acknowledge as the SEC, then inform examinee that, "notifications will be made within 15 minutes of event declaration and the NSP Emergency Response Organization will be activated."**
Performance:	**SATISFACTORY** _____ **UNSATISFACTORY** _____
Comments:	_____

Performance Step: **Critical X (S-5)**	Announce the emergency class over PA System: ATTENTION ALL PLANT PERSONNEL: A GENERAL EMERGENCY HAS BEEN DECLARED BASED ON (brief description of event). ALL MEMBERS OF THE EMERGENCY RESPONSE ORGANIZATION REPORT TO YOUR EMERGENCY DUTY STATIONS OR EMERGENCY CENTER. ALL OTHER PERSONNEL STANDBY FOR FURTHER INSTRUCTIONS. Repeat announcement.
Standard:	Announcement made and repeated.
Evaluator Cue:	**When examinee indicates that he/she would make the announcement and repeat it, inform examinee that, "the announcement has been made and repeated."**
Performance:	**SATISFACTORY** _____ **UNSATISFACTORY** _____
Comments:	_____

Terminating Cues: **When announcement has been made, inform examinee that, "this JPM is complete."**

Stop Time: _____

SIMULATOR SETUP

Instructor Guide:

- Initialize the simulator to IC-10.
- Place the simulator in "RUN" and allow ERCS to initialize.
- Place the DSS control switch in "PULLOUT".
- Enter malfunction to prevent automatic Reactor trip ***(Relative Order 0)***.
- Enter malfunctions to cause Loss of Feedwater ATWS with inability to Feed and Bleed ***(Relative Order 1, Event Trigger 1)***.
- When SG WR level decreases to < 7%, perform the following:
  - Momentarily place the DSS control switch in "ACTUATE" and then allow to spring return to "AUTO".
  - Delete malfunction to prevent automatic Reactor trip ***(Relative Order 2)***.

SIMULATOR SETUP

Relative Order	*System or Panel Drawing*	*TYPE*	*CODE*	*Severity or Value*	*Event Trigger*	*TIMING*	*DESCRIPTION*
0	SIMRP01	MALF	RP07				Mechanical Failure of Reactor Trip Breakers
1	SIMED04	MALF	ED09F		1		Loss of 4160V Bus #16
1	SIMFW08	MALF	FW33		1		Auxiliary Feedwater Pump Trip, Turbine
1	SIMSI02	MALF	SI04A		1		Safety Injection Pump #11 Trips
1	SIMMS01B	MALF	TC02A		1		Turbine Stop Valve CV-31182 Fails Closed
1	SIMRP02	MALF	RP04A		1		Safety Injection Train A Actuation
2	SIMRP01	MALF	RP07	DELETE			Mechanical Failure of Reactor Trip Breakers

TURNOVER SHEET

INITIAL CONDITIONS:

- Unit 1 has experienced a loss of feedwater ATWS.
- The crew has just entered FR-H.1.
- The SEC has been summoned to the Control Room and has completed the Meteorological Data on PINGP 577.

INITIATING CUES:

- The SM/ED directs you as the Unit 2 SS to assume interim ED responsibilities, classify the event, and complete the PINGP 1125, "ED Checklist".

PINGP 577, Rev 26
Page 1 of 2
Retention: Life of Plant
Document Type: 7.36E

USE FOR TRAINING PURPOSES ONLY!

EMERGENCY NOTIFICATION REPORT FORM

INSTRUCTIONS

1. Complete all sections of this form for Alert, S.A., or General Emergency and NUEs involving a hazardous release; otherwise, Section 2.2 (Met Info) is not necessary.
2. Use Table 1 on Back of Page 2 to determine geopolitical subareas.
3. Notify State/Local authorities within 15 minutes, with information contained on Pages 1 and 2.
4. Fax only Page 1 and Page 2 Front to State/Local authorities.

1.1 PLANT IDENTIFICATION

This is _____**, Emergency Communicator at the Prairie Island Nuclear Generating Plant.** (651-388-1121)

_____ (a) This is a Real Emergency.

_____ (b) This is a Drill.

1.2 EVENT CLASSIFICATION

We have

_____ (a) Declared a(an)
_____ (b) Escalated to a(an)
_____ (c) No classification change, PAR update only
_____ (d) Terminated the

_____ (a) Notification of Unusual Event
_____ (b) Alert
_____ (c) Site Area Emergency
_____ (d) General Emergency
_____ (e) and entered the Recovery Phase

At _____ **hours on** _____ **(date).**

1.3 RELEASE INFORMATION (Report a radioactive release if any RCS activity or Rad Waste System activity is released to the environment during an emergency.)

The emergency

_____ (a) **DOES NOT** involve a radioactive release.

_____ (b) **DOES** involve a _____ radioactive release.
liquid/airborne

1.4 PROTECTIVE ACTION RECOMMENDATION

The protective action recommended at the time is:

_____ (a) Evacuate ____ALL____ sectors out to _____ miles
_____ sectors out to _____ miles

(circle) SUBAREAS (2) 5N 5E 5S 5W 10NW 10N 10NE 10E 10SE 10SW 10W

Advise remainder of plume EPZ to monitor radio/TV broadcasts for further emergency information.

_____ (b) None

EMERGENCY NOTIFICATION REPORT FORM

2.1 EVENT DESCRIPTION (Use the generic Initiating Condition and the EAL Ref. Manual # from F3-2.)

The initiating event causing the emergency is:

_____

_____

_____

The EAL Reference Manual Condition Number is _____.

This event is related to: ( ) Unit 1 ( ) Unit 2 ( ) Both Units

2.2 METEOROLOGICAL INFORMATION (Complete this section for an Alert, S.A. or General Emergency and an NUE involving a hazardous release; otherwise NA may be indicated. Use the 10 meter 15 minutes average met data, from the 10a sensor if reliable, otherwise use 10b, 60a, 60b, or 22 meter tower. Use 60a for stability class, otherwise use 60b. If met not available via MIDAS, access met via ERCS per F3-13.5.)

Present Meteorological data is:

a. **Wind Speed** 12 **mph**

b. **Wind direction (from)** 348 °

c. **Temperature** 61 °F

d. **Precipitation** No

e. **Stability Class:** A B (C) D E F G
(Circle One)
unstable ⇐ ⇒ stable

f. **Affected sectors** FGHJK

_____

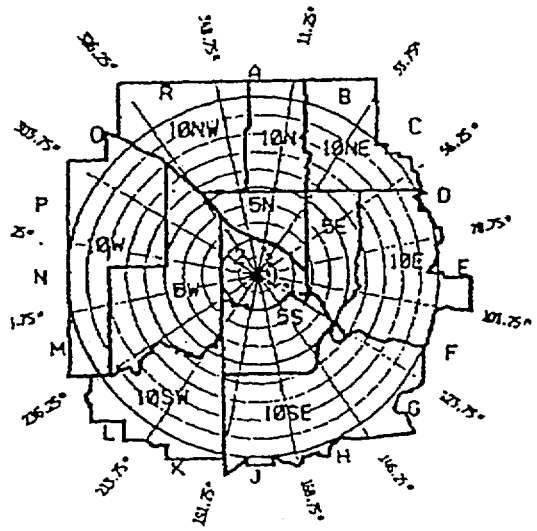

2.3 PLEASE RELAY THIS INFORMATION TO YOUR EMERGENCY ORGANIZATION PERSONNEL.

NOTE:	**ED/EM should ensure date & time are correct in Section 1.2.**

EMERGENCY DIRECTOR/MANAGER APPROVAL _____
NAME

For NUE Routing Only _____ Supt. Radiation Protection and Chemistry

F3 Section	TITLE: CLASSIFICATIONS OF EMERGENCIES	NUMBER: F3-2 REV: 26

Reviewed By: _____ GEN. SUPT. RADIATION PROTECTION

Approved By: _____ PLANT MANAGER

Effective Date: 4-3-00

OC Review: 3-8-00

REFERENCE USE

- ***Procedure segments may be performed from memory.***
- ***Use the procedure to verify segments are complete.***
- ***Mark off steps within segment before continuing.***
- ***Procedure should be available at the work location.***

F3 Section	TITLE: CLASSIFICATIONS OF EMERGENCIES	NUMBER: F3-2 REV: 26

TABLE OF CONTENTS

Section	Title	Page
1.0	PURPOSE	3
2.0	APPLICABILITY	3
3.0	PRECAUTIONS	3
4.0	RESPONSIBILITIES	4
5.0	DISCUSSION	4
5.1	Definitions	4
5.2	Emergency Action Levels	5
5.3	The Emergency Classification/Declaration/Implementation Process	6
5.4	Technical Specification Required Shutdown NUEs	7
5.5	Rapidly Escalating then De-escalating Events	8
5.6	The Emergency Action Level Reference Manual Number	8
6.0	PREREQUISITES	8
7.0	PROCEDURE	9

LIST OF ATTACHMENTS

ATTACHMENT 1 - SUMMARY OF EMERGENCY ACTION LEVELS

F3 Section	TITLE: CLASSIFICATIONS OF EMERGENCIES	NUMBER: F3-2
		REV: 26

1.0 PURPOSE

The purpose of this procedure is to specify the Emergency Action Levels that indicate an emergency condition exists and to properly classify the emergency into one of the four graded levels of emergency classifications. This procedure partially satisfies the requirement of 10CFR50.47 concerning the existence of an emergency classification and action level scheme.

2.0 APPLICABILITY

This instruction **SHALL** apply to all Shift Managers (SM), Shift Supervisors (SS), Control Room Operators (CRO), Emergency Directors (ED) and Emergency Manager (EM).

3.0 PRECAUTIONS

3.1 Attempt to verify the indications by checking secondary or coincident indicators.

3.2 An emergency classification should be made based on current plant conditions described in Attachment 1 of this procedure.

3.3 These emergency classifications do not apply to offsite transportation incidents that do NOT affect safe operation of the plant. Currently, the Radiation Protection group is responsible for offsite transportation incident assessment involving plant related shipments.

3.4 Rapidly Escalating Then De-escalating Events

3.4.1 In the case of an event that rapidly escalates then de-escalates or begins at a higher emergency class then rapidly de-escalates, the initial emergency classification should be based on <u>current</u> plant conditions. At a minimum, an NUE must be declared.

3.4.2 During initial notifications to the NRC, the NRC should be informed of the <u>current</u> emergency classification <u>and</u> also the <u>highest</u> emergency classification reached during the course of the event. Emphasize the current emergency classification.

3.5 Continuously monitor the Control Room instrumentation, radiation monitors, or any other developments which would be indicative of further system degradation. Be prepared to escalate to a more severe emergency classification.

F3 ection	TITLE: CLASSIFICATIONS OF EMERGENCIES	NUMBER: F3-2 REV: 26

PONSIBILITIES

Duty Shift Manager has the responsibility to authorize the initial emergency classification.

Shift Supervisor of the unaffected unit has the responsibility to assist the Shift Manager as necessary including authorization of an emergency classification.

Shift Supervisor of the affected unit has the responsibility to direct activities related to the operation of the affected unit.

Emergency Director has the responsibility to authorize an emergency classification whenever an Alert, Site Area, or General Emergency is declared and the EOF is not activated.

If the EOF is activated and fully functional, the Emergency Manager has the responsibility to authorize an emergency classification.

Control Room Operators and affected unit Shift Supervisor have the responsibility to assist the Shift Manager or unaffected unit Shift Supervisor in the identification and verification of control board indications.

USSION

Definitions

5.1.1 Notification of Unusual Event - events that are in progress or have occurred which indicate a potential degradation of the level of safety of the plant.

No releases of radioactive material requiring offsite response or monitoring are expected unless further degradation of safety systems occurs.

5.1.2 Alert - events are in progress or have occurred which involve actual or potential substantial degradation of the level of safety of the plant. It is the lowest level of emergency classification when some necessity for emergency planning and offsite response is necessary.

Any releases expected are limited to small fractions of the EPA Protective Action Guideline exposure levels.

5.1.3 Site Area Emergency - events are in progress or have occurred which involve actual or likely major failure of plant functions needed for protection of the public.

Any releases are not expected to exceed the EPA Protective Action Guideline exposure levels except near the site boundary.

5.1.4 General Emergency - events are in progress or have occurred which involve actual or imminent substantial core degradation or melting with a potential for loss of containment integrity.

Releases during a General Emergency can be reasonably expected to exceed the EPA Protective Action Guideline exposure levels offsite for more than the immediate site area.

5.1.5 Emergency Action Levels (EAL) - specific instrument readings, surface or airborne contamination levels or radiation dose rates that designate a specific emergency class requiring emergency measures for that class.

5.2 Emergency Action Levels

Attached to this procedure is a Summary of Emergency Action Levels, Attachment 1. This summary identifies the four emergency classifications, the initiating condition(s), emergency action levels for each classification, and, where applicable, specific instruments and indications to be used to detect and classify an emergency.

The emergency action levels for each classification and the instrument readings and indications listed do not reflect a complete list of instrumentation that will show abnormal indications but does list those key parameters useful in classifying the event.

The Summary of Emergency Action Levels lists are based on the initiating conditions as required by Appendix 1 of NUREG-0654, accidents analyzed in the Prairie Island USAR, and the NRC Branch Position on Acceptable Deviations From NUREG-0654/ FEMA-REP-1, July 11, 1994.

5.3 The Emergency Classification/Declaration/Implementation Process

There are three distinct phases to consider: Classification, Declaration and Implementation.

5.3.1 Classification:

The act of **assessing** the EALs to determine the appropriate classification which the ongoing events are categorized. This may take a reasonable length of time (5 to 15 minutes for most situations) depending upon the complexity of the situation. This assessment period is consistent with the NRC Branch Position on Timeliness of Classification of Emergency Conditions, EPPOS No. 2.

5.3.2 Declaration:

The act of formally **declaring** the classification based on the assessment of EALs. This is the point at which the classification time is set and the 10CFR50, App. E 15-minute offsite notification clock starts.

5.3.3 Implementation:

The act of **making the notification and/or augmentation** of the emergency organizations.

5.3.4 Ideally, the Emergency Notification Report Form (PINGP 577) should be filled out to near completion while the classification phase is being conducted. Once the declaration is made by the SM/ED/EM, the 15-minute offsite notification time starts. The SM/ED/EM should review the contents of the Emergency Notification Report Form (PINGP 577) to ensure its completeness, verify the correct declaration time and then sign the form which gives permission to the Shift Emergency Communicator (or Offsite Communicator in EOF) to implement the E-Plan notifications.

5.3.5 Per 10CFR50.72 (a)(3) NRC notification is required immediately after the notification of the state and local agencies (which is completed within about 15 minutes) and not later than one hour after the emergency declaration.

5.4 Technical Specification Required Shutdown NUEs

5.4.1 In some cases, exceeding Technical Specification limits (e.g., RCS leakage, reactor coolant activity, etc.) is considered to be precursors to more serious events and warrant declaration of an NUE.

5.4.2 In other cases, exceeding Technical Specification limits for the period designated in the action statement is an analyzed condition of the plant and does not, by itself, represent an emergency. These events are reportable in accordance with 10 CFR 50.72 as a non-emergencies.

However, if the plant is not brought to the required operating mode within the allowable Technical Specification action statement time limit, then a declaration of an Unusual Event should be declared.

5.4.3 With regard to Emergency Plan classifications, Operations should handle a Technical Specification required shutdown in the following manner:

A. The conditions of the plant should come first. That is, if the condition warrants initiating power reduction immediately, do so. The E-Plan classification can appropriately follow.

B. Following the initiation of the reduction in power or temperature, the classification phase of the E-Plan is started. Review of the EALs should be done to assess for proper classification. Once the Shift Manager has determined the appropriate classification for the event, the Shift Manager should declare the classification and note the time of declaration (this begins the 15-minute offsite notification clock).

This classification phase should be done within a reasonable time frame (5 to 15 minutes for most instances) determined by the circumstances.

C. Once the declaration is made, the Shift Manager should review the contents of the Emergency Notification Report Form (PINGP 577) to ensure its completeness, verify the correct declaration time and then sign the form which gives permission to the Shift Emergency Communicator to implement the E-Plan notifications.

5.5 Rapidly Escalating then De-escalating Events

In the case of an event that rapidly escalates then de-escalates or begins at a higher emergency class then rapidly de-escalates, the initial emergency classification should be based on current plant conditions. At a minimum a Notification of Unusual Event must be declared.

The NRC should be informed of the current emergency classification and the highest emergency classification reached during the course of the event during the initial NRC notification via the ENS phone. The Shift Manager should ensure that this notification be performed by an appropriate individual other than the SEC using PINGP Form 666, Event Notification Worksheet. To avoid possible confusion, other offsite authorities will be informed of the current classification during the initial notification and then given the full description of the highest emergency classification reached during the first update on the follow-up notification.

5.6 The Emergency Action Level Reference Manual Number

NSP has prepared a written manual (EAL Reference Manual) to provide general information about Emergency Action Levels to offsite authorities who are involved in nuclear plant emergency planning. This manual provides a description with text and drawings of the various conditions that might cause the Prairie Island Nuclear Generating Plant to classify an event. By understanding what a particular condition or event means, emergency workers at the various offsite agencies should develop a clear idea of what is occurring at the plant during the emergency.

Each initiating condition in this procedure is followed by a cross reference number that corresponds to the appropriate classification condition in the EAL Reference Manual. When the Emergency Notification Report Form (PINGP 577) is completed, the initiating condition statement and the EAL Reference Manual cross reference number should be included on the form.

6.0 PREREQUISITES

An off-normal condition corresponding to one of the initiating events described in Attachment 1 of this procedure is occurring or has occurred.

F3 Section	TITLE: CLASSIFICATIONS OF EMERGENCIES	NUMBER: F3-2
		REV: 26

7.0 PROCEDURE

7.1 Any significant event that may be classified as an emergency condition **SHALL** be reported to the Shift Supervisor, Shift Manager and/or Emergency Director immediately.

NOTE:	**The events may be instrumentation readings or visual observations made by plant personnel.**

7.2 Attempt to verify the initial indication by comparing the indication to redundant instrument channels or to other related parameters, visual observations, and field reports as applicable.

7.3 The Shift Manager, unaffected Shift Supervisor or Emergency Director **SHALL** assess the situation and determine the emergency classification, using the guidelines of Attachment 1.

7.4 In those cases when an event rapidly escalates, then de-escalates or begins at a higher classification, then rapidly de-escalates, the initial emergency classification should be based on current plant conditions.

7.4.1 At a minimum, a Notification of Unusual Event should be declared.

7.4.2 If the event de-escalates to such a level that no emergency action level is met, the Notification of Unusual Event and termination of the event may be declared at the same time provided the event termination criteria (as described later in this procedure) are met.

7.4.3 Inform the NRC of the current emergency classification and the highest emergency classification reached during the course of the event during the initial NRC ENS notification.

7.5 The Shift Supervisor of the affected unit should take immediate actions, using applicable plant operating procedures to return the plant to normal (or cold shutdown, if determined to be necessary).

7.6 If the EOF is not activated, the Shift Manager or Emergency Director **SHALL** declare the appropriate emergency classification and perform actions as specified in the appropriate responsibility procedure applicable to emergency classification:

7.6.1 For a Notification of Unusual Event, proceed to F3-3.

7.6.2 For an Alert, Site or General Emergency, proceed to F3-4.

If the EOF is activated, contact the Emergency Manager for consultation on whether or not to change the emergency classification. The Emergency Director is responsible to formulate the new classification while the Emergency Manager is responsible to authorize the reclassification.

7.7 Continue to assess and watch for changing parameters or visual indication of further system degradation and be prepared to escalate to a more severe emergency classification as indicated by the Emergency Action Levels in Attachment 1.

7.8 As plant conditions stabilize during a Notification of an Unusual Event (NUE) or Alert, consider terminating the event classification.

7.8.1 For the NUE and Alert classifications, the event may be terminated once the following criteria are met:

A. The plant is in stable condition with at least one fission product barrier intact, and

B. Radioactive gaseous and liquid effluent are being controlled within the following limits:

1. Gaseous effluent release rates (or resulting dose rates) are within plant limits as defined in Section 3.1 of H4, Offsite Dose Calculation Manual (ODCM), and

2. Liquid effluent release rates (or resulting concentrations) are within the plant limits as defined in "Old 10CFR20 Appendix B in Table II, Column 2 (April 1992)" located in H4, ODCM, Table 4.3 and

C. The potential for future degradation of plant conditions is small.

7.8.2 Termination of an NUE classification may be performed by the Shift Manager.

7.8.3 Termination of an Alert classification may be performed by the Emergency Director if the EOF is not activated. Once the EOF is fully functional, the Emergency Manager **SHALL** terminate the Alert classification when the conditions are met for termination.

7.8.4 Termination of an Alert classification includes the dismissal of the NSP Emergency Response Organization. Any necessary in-plant or on-site follow-up activities should be coordinated and managed by the normal plant site organization. In some cases, conditions may require the establishment of a Recovery Organization in which case the Emergency Director and Emergency Manager should make this determination based on the extent of damage or other considerations.

7.9 As plant conditions stabilize during a Site Area or General Emergency, consider transition to the Recovery phase.

NOTE:	**If the Site Area Emergency event does not require significant repairs or analysis beyond the capabilities of the normal plant site organization and the conditions of 7.8.1. A, B, & C are met, then the Site Area Emergency may be terminated without a transition to Recovery.**

Transition to Recovery should be directed by the Emergency Manager with coordinated recovery planning by NSP Emergency Response Organizations. See F3-30, "Recovery", for instruction on transition to Recovery.

F3 Section	TITLE: CLASSIFICATION OF EMERGENCIES ATTACHMENT 1	NUMBER: F3-2
		REV: 26

SUMMARY

OF

EMERGENCY ACTION LEVELS

F3 Section	TITLE: CLASSIFICATION OF EMERGENCIES ATTACHMENT 1	NUMBER: F3-2 REV: 26

INITIATING CONDITION INDEX

No.	Condition Description	Page
1	Safety System Functions	3
2	Abnormal Primary Leak Rate	4
3	Deleted	8
4	Abnormal Primary/Secondary Leak	9
5	Core Fuel Damage	13
6	Loss of 2 of 3 Fission Product Barriers	15
7	Secondary Coolant Anomaly	21
8	Radiological Effluents	26
9	Major Electrical Failures	31
10	Control Room Evacuations	35
11	Fires	36
12	Plant Shutdown Functions	38
13	Fuel Handling Accidents	44
14	Deleted	46
15	Deleted	46
16	Security Threats	47
17	Hazards to Plant Operations	48
18	ISFSI (Independent Spent Fuel Storage Installation) Events	53
19	Natural Events	54
20	Other	59

Condition 1 : Safety System Functions

Failure of a safety or relief valve in a safety related system to close following reduction of applicable pressure.

(EAL Ref Manual 1B)

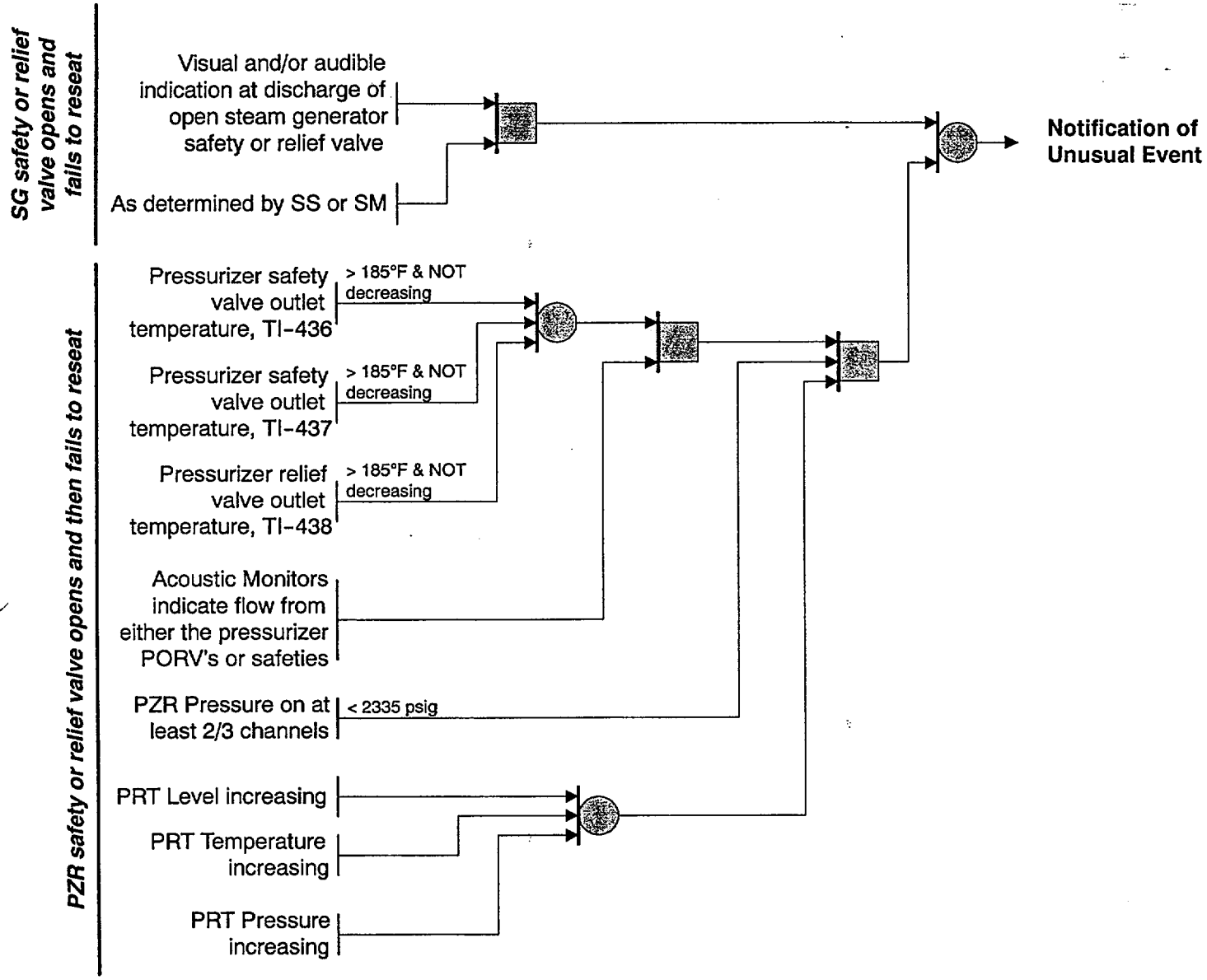

Condition 2: Abnormal Primary Leak

Primary system leak rate from unidentified or uncontrolled sources exceeding Technical Specifications.

(EAL Ref Manual 2A)

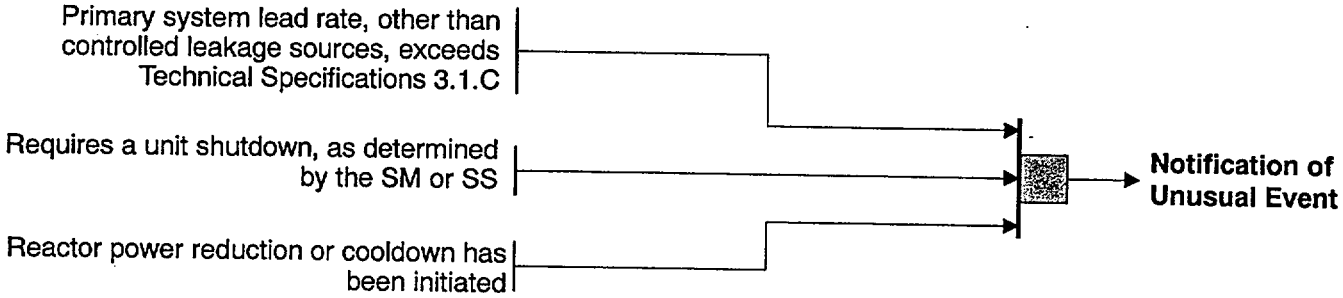

Primary coolant leak rate greater than 50 gpm.

(EAL Ref Manual 2B)

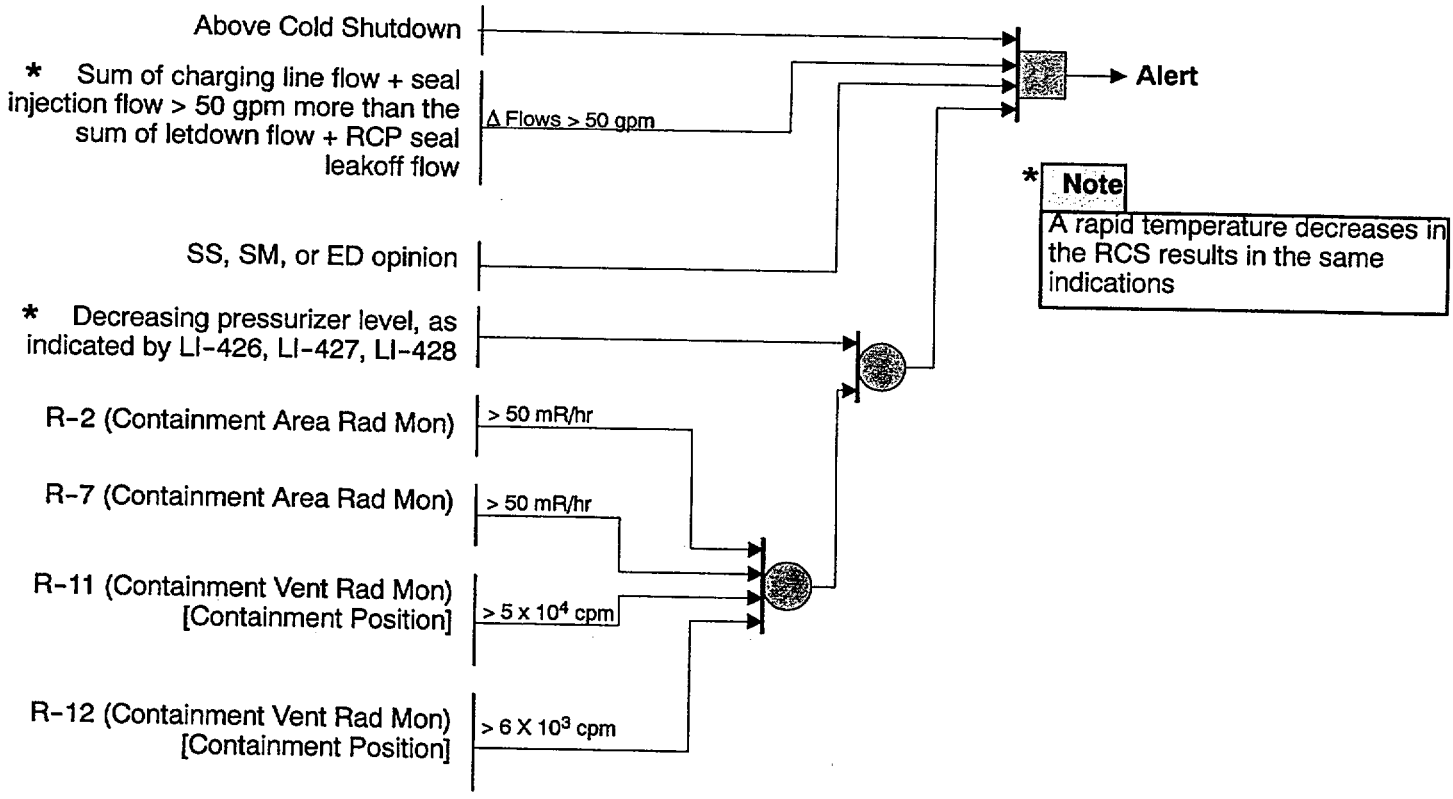

Condition 2: Abnormal Primary Leak

LOCA with leak rate in excess of available pump capacity. (Small LOCA with failure of SI or Large LOCA greater than SI flow.)

(EAL Ref Manual 2C)

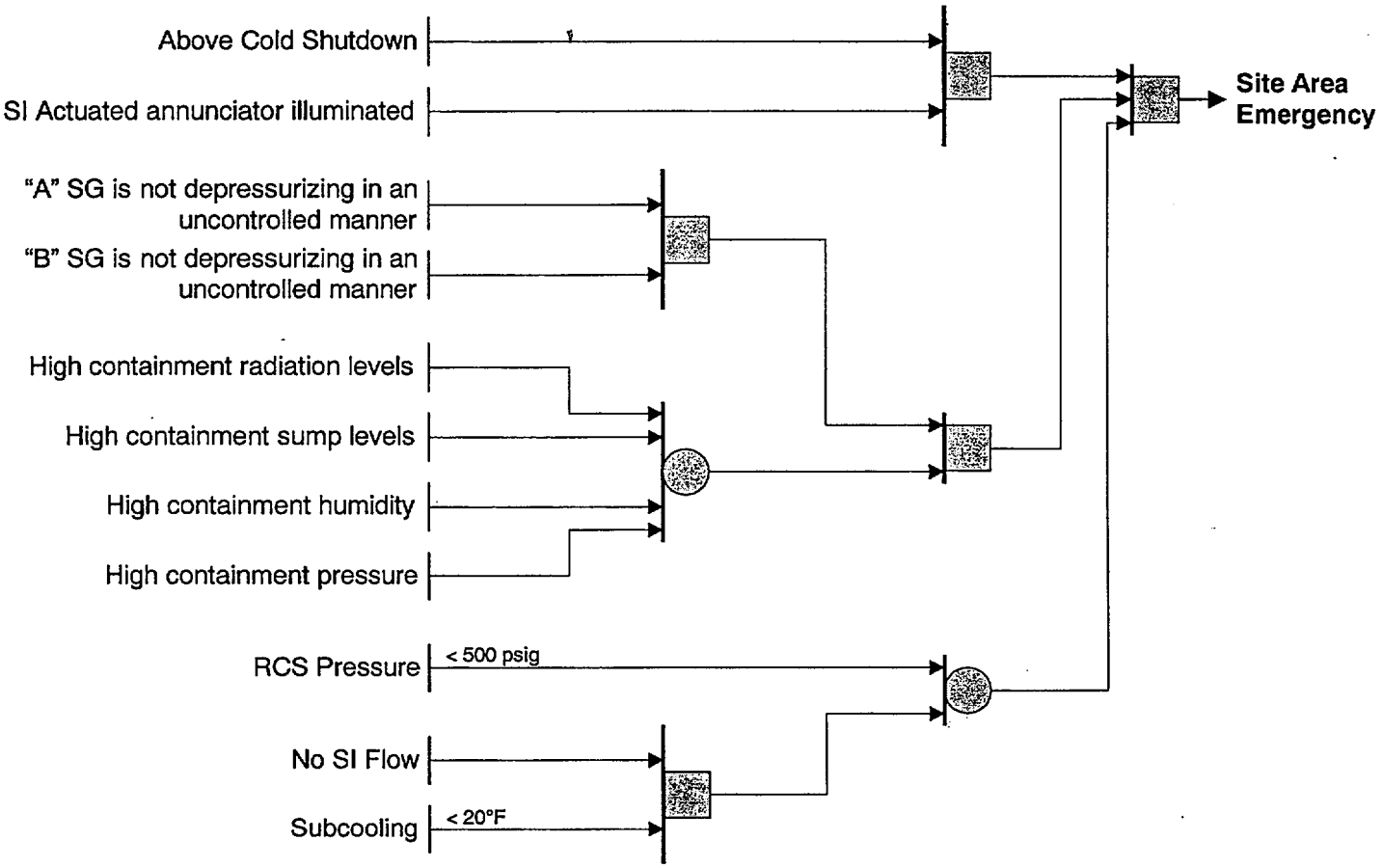

Condition 2: Abnormal Primary Leak

Small LOCA and initially successful ECCS. Subsequent failure of containment heat removal systems over several hours could lead to core melt and likely failure of containment.

(EAL Ref Manual 2D)

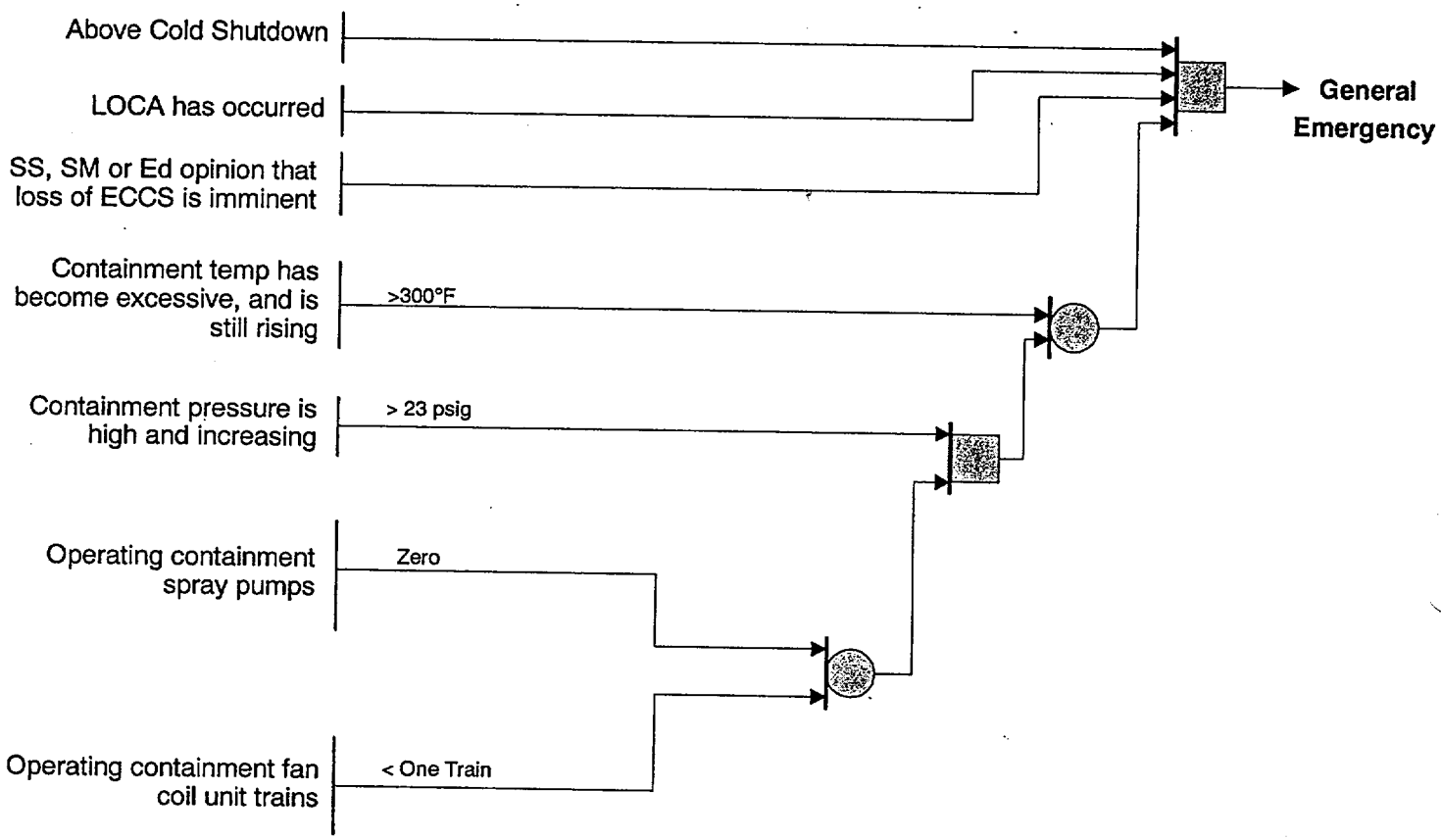

Condition 2: Abnormal Primary Leak

Small and large LOCA's with failure of ECCS to perform leading to severe core degradation or melt in from minutes to hours. Ultimate failure of containment likely for melt sequences.

(EAL Ref Manual 2E)

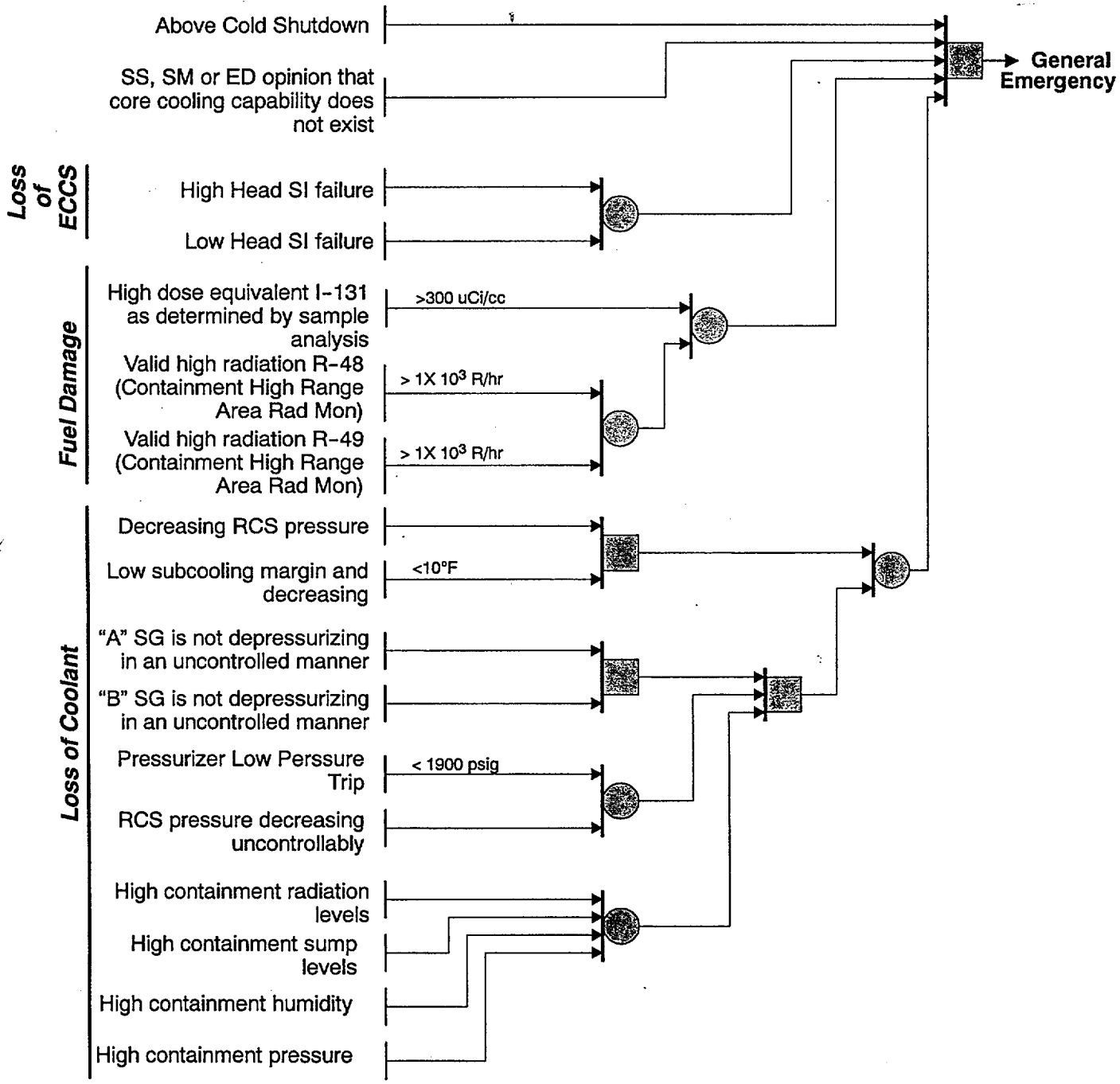

Condition 3 : Abnormal Coolant Temperature/Pressure

DELETED

Deleted based on NRC Branch Position On Acceptable Deviations From Appendix 1 to NUREG-0654/FEMA-REP-1, July 11, 1994.

Condition 4 : Abnormal Primary / Secondary Leak

Primary /Secondary leak rate exceeding Technical Specifications.

(EAL Ref Manual 4A)

SG primary to secondary leakage exceeds Tech Spec 3.1.C limits — > 150 GPD through any 1 SG → **Notification of Unusual Event**

Primary /Secondary leak rate greater than 50 gpm.

(EAL Ref Manual 4B)

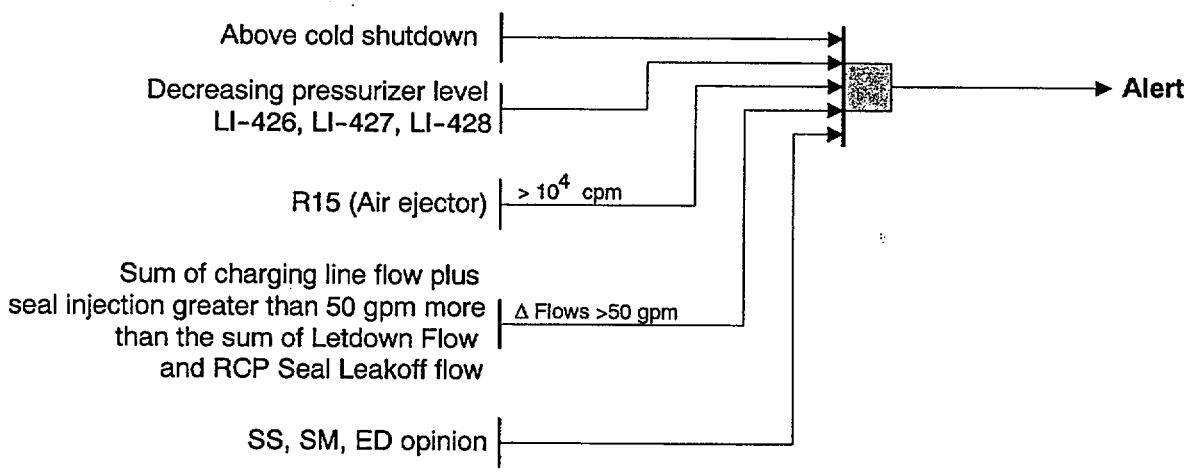

Condition 4 : Abnormal Primary /Secondary Leak

Failure of steam generator tube(s) resulting in ECCS actuation.

(EAL Ref Manual 4C)

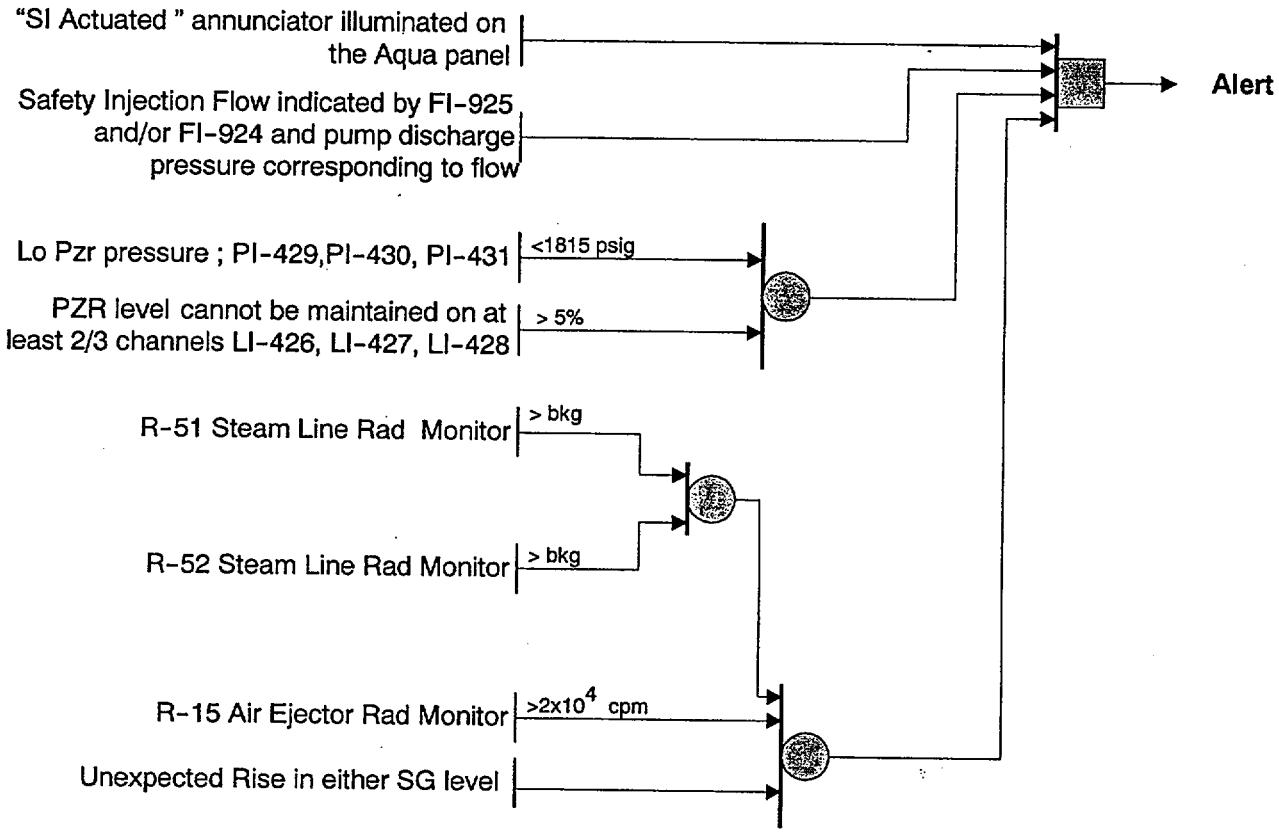

Condition 4 : Abnormal Primary /Secondary Leak

Failure of steam generator tube(s) resulting in ECCS actuation and high potential for loss of containment.

(EAL Ref Manual 4D)

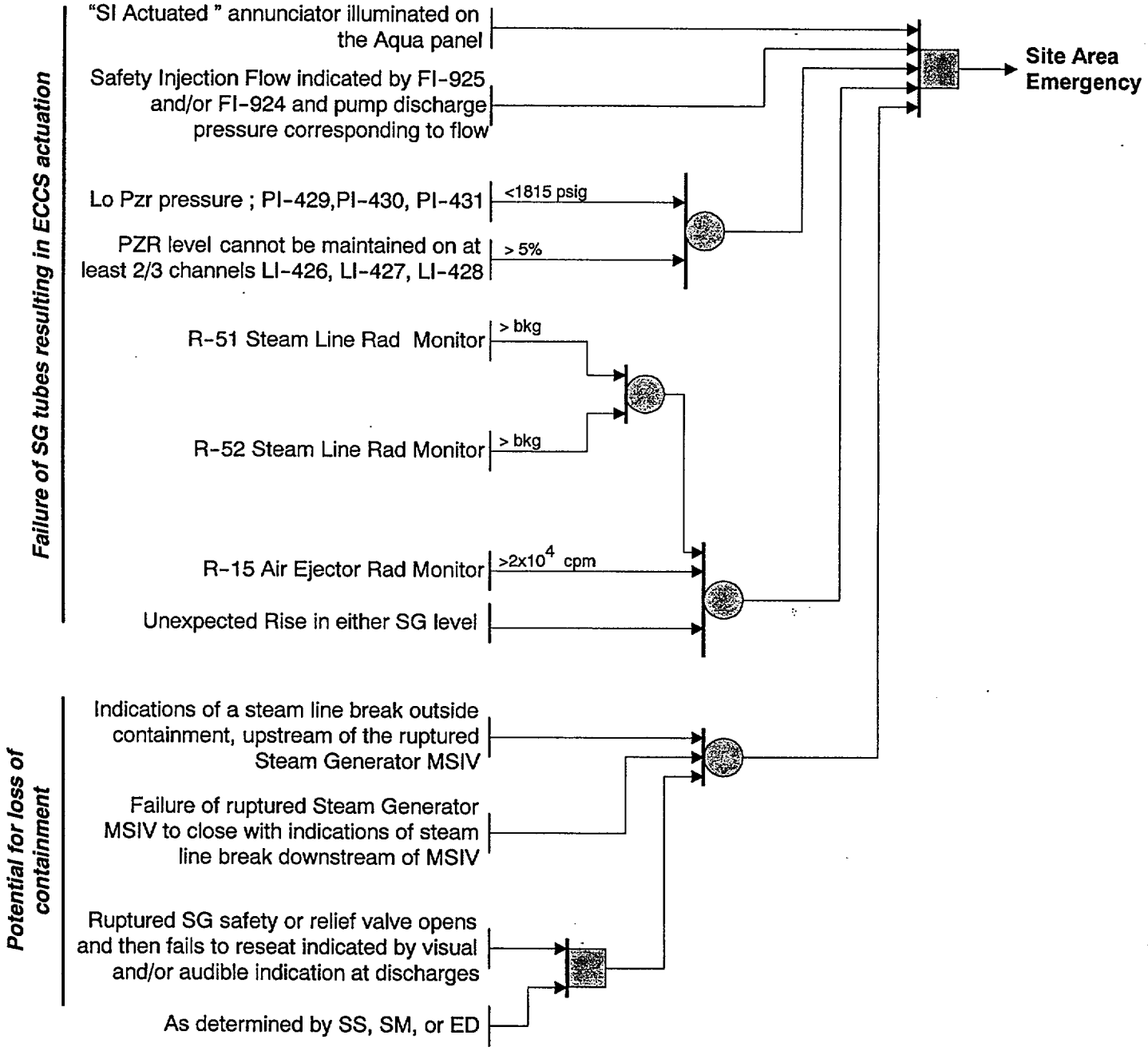

Condition 4 : Abnormal Primary /Secondary Leak

Failure of steam generator tube(s) resulting in ECCS actuation and loss of offsite power.

(EAL Ref Manual 4E)

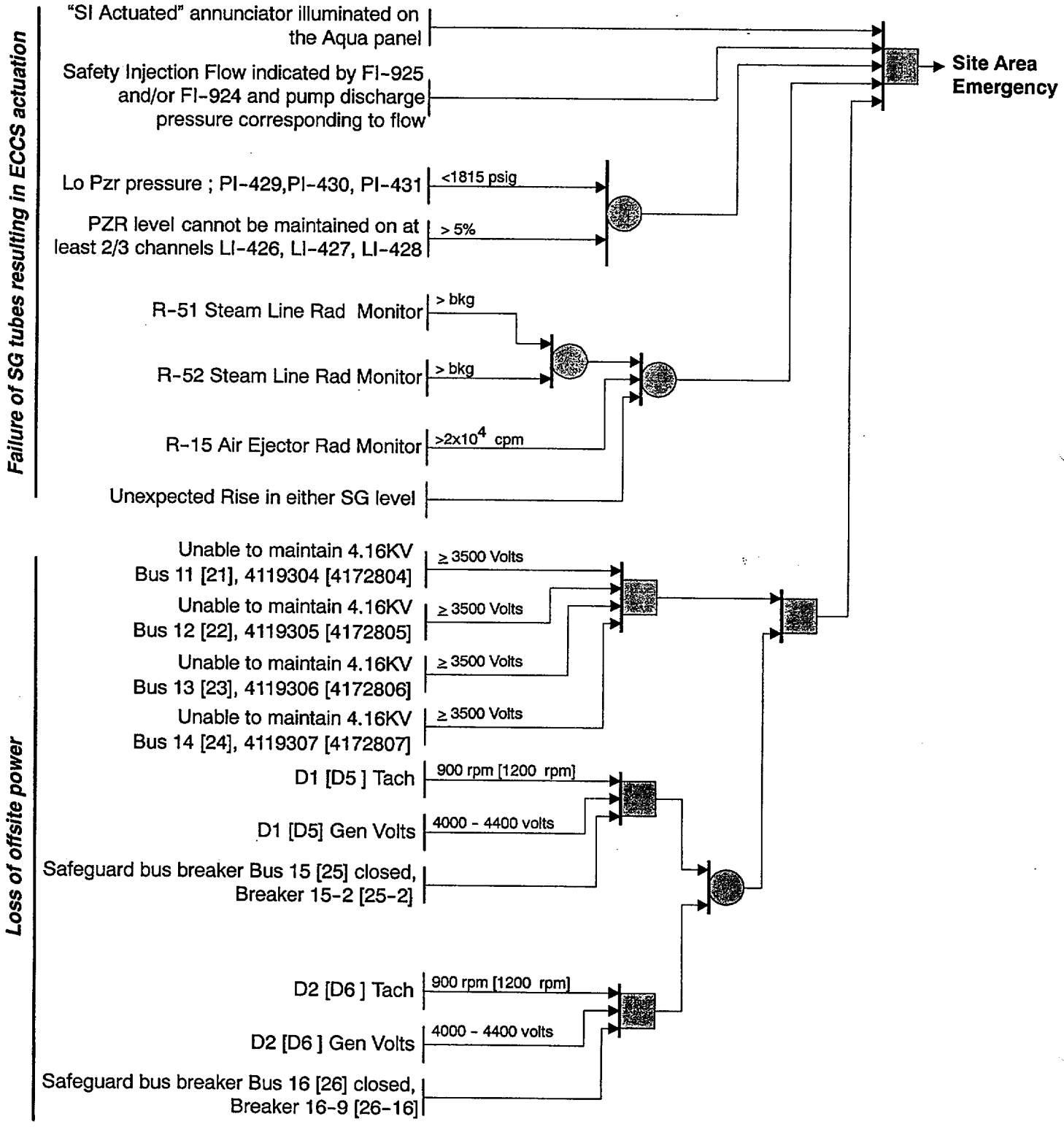

Condition 5 : Core Fuel Damage

Fuel Damage Indication (EAL Ref Manual 5A)

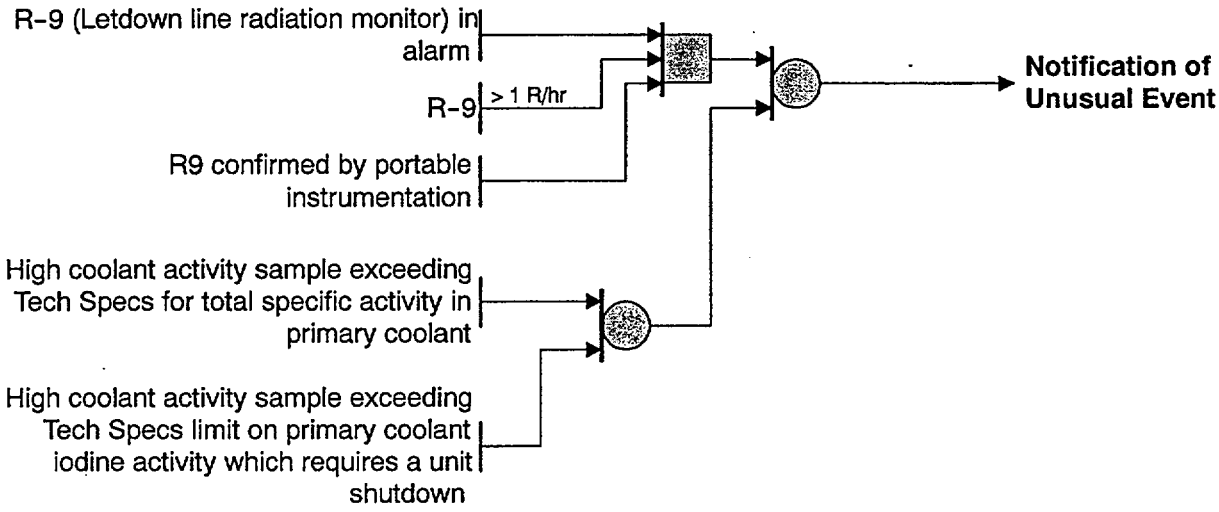

Severe Loss of fuel cladding (EAL Ref Manual 5B)

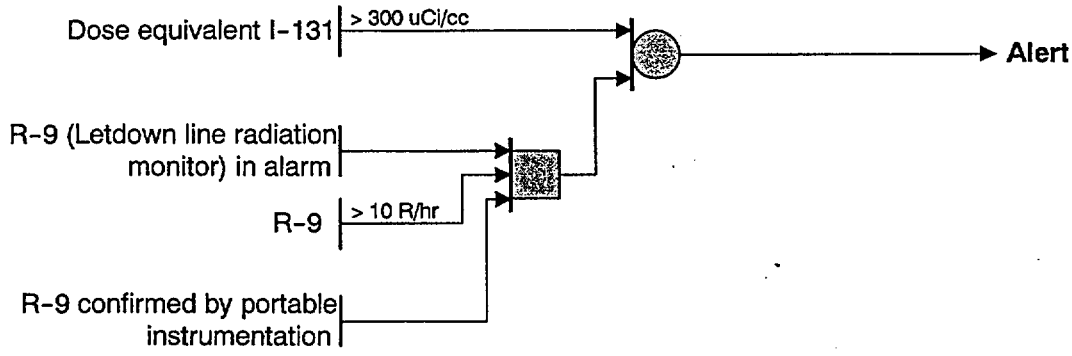

Condition 5 : Core Fuel Damage

Degraded core with possible loss of coolable geometry

(EAL Ref Manual 5C)

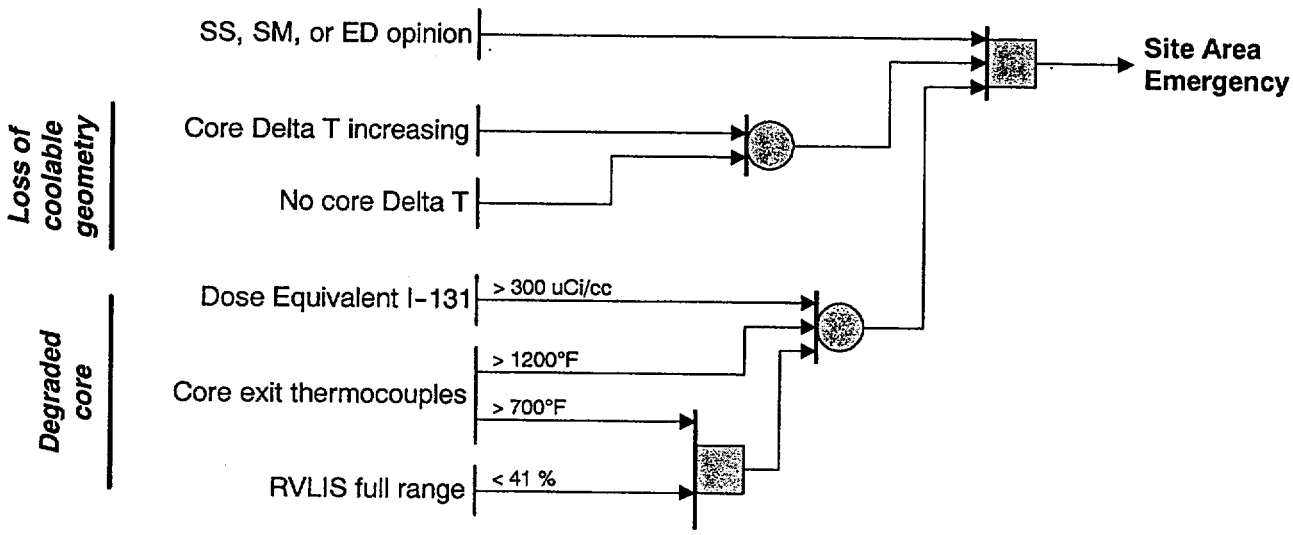

Condition 6 : Loss of 2 of 3 Fission Product Barriers

Loss of 2 of 3 fission product barriers with a potential loss of 3rd barrier. (EAL Ref Manual 6)

GENERAL EMERGENCY

NOTES:	**1. Three permutations exist for loss of 2 of 3 fission product barriers with a potential loss of 3rd barrier;** **A. Failure of cladding and primary coolant boundary with potential loss of containment.** **B. Failure of cladding and containment with potential loss of primary coolant boundary.** **C. Failure of containment and primary coolant boundary with potential loss of cladding.** **These 3 permutations are represented in the following 5 cases, each with its own set of EAL's:** **2. All cases are applicable to operations above Cold Shutdown.**

Condition 6: Loss of 2 of 3 Fission Product Barriers

Case 1: Loss of clad, loss of primary coolant boundary (LOCA), and high potential for loss of containment.

(EAL Ref Manual 6)

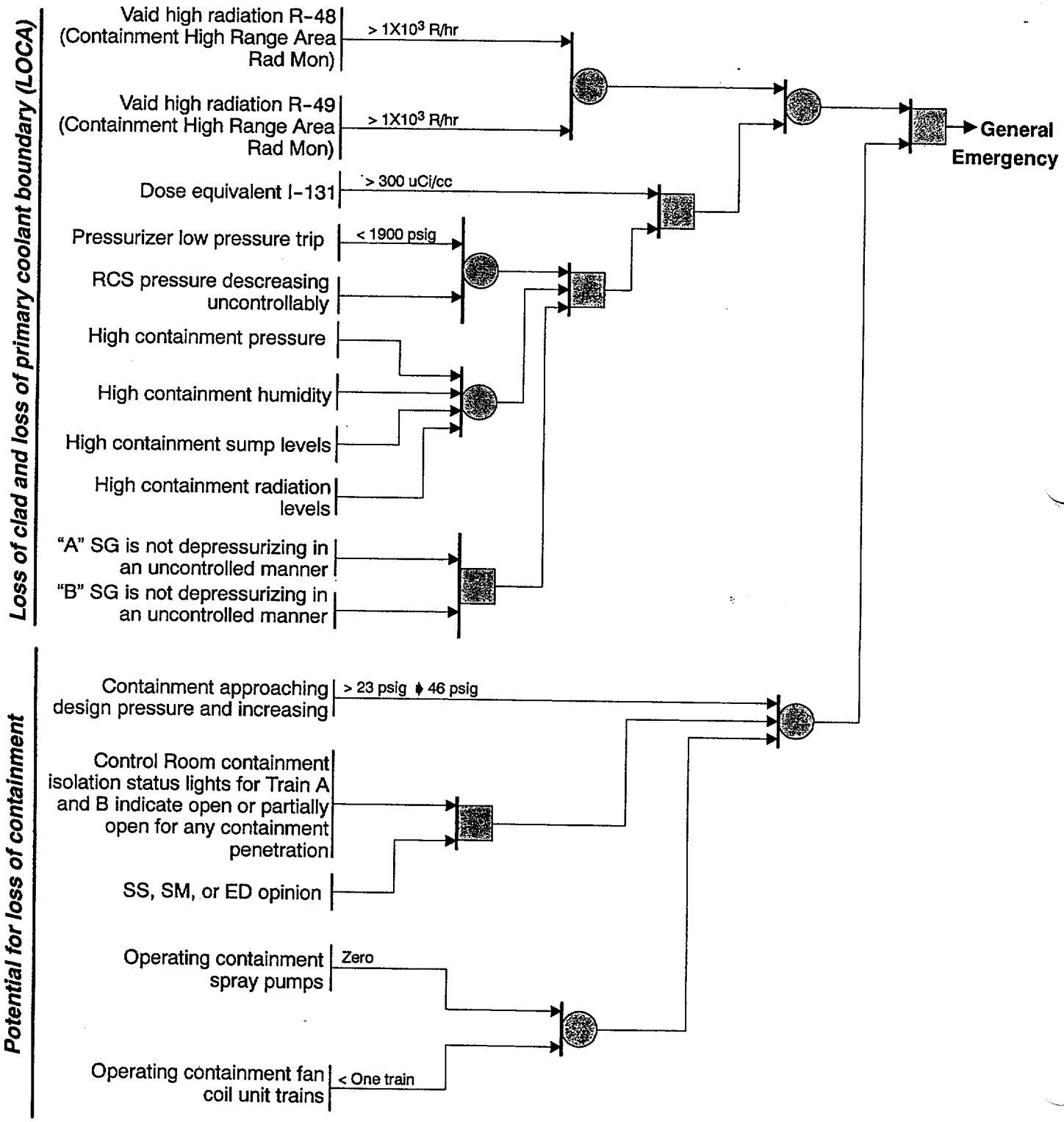

Condition 6: Loss of 2 of 3 Fission Product Barriers

Case 2: Loss of clad, SG tube rupture and high potential for loss of containment

(EAL Ref Manual 6)

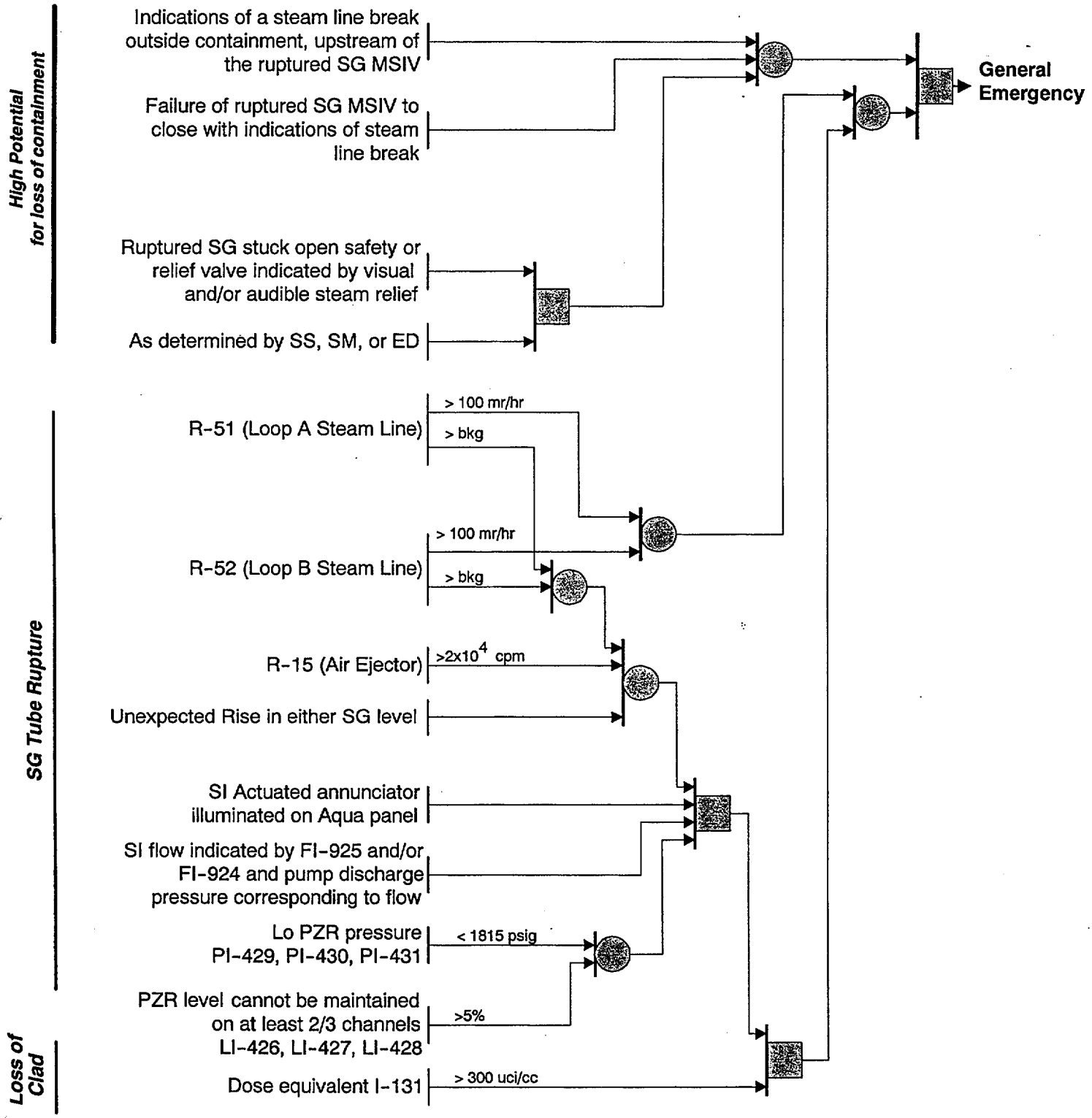

Condition 6: Loss of 2 of 3 Fission Product Barriers

Case 3 : Loss of clad, containment failure, and a high potential for loss of the RCS boundary.

(EAL Ref Manual 6)

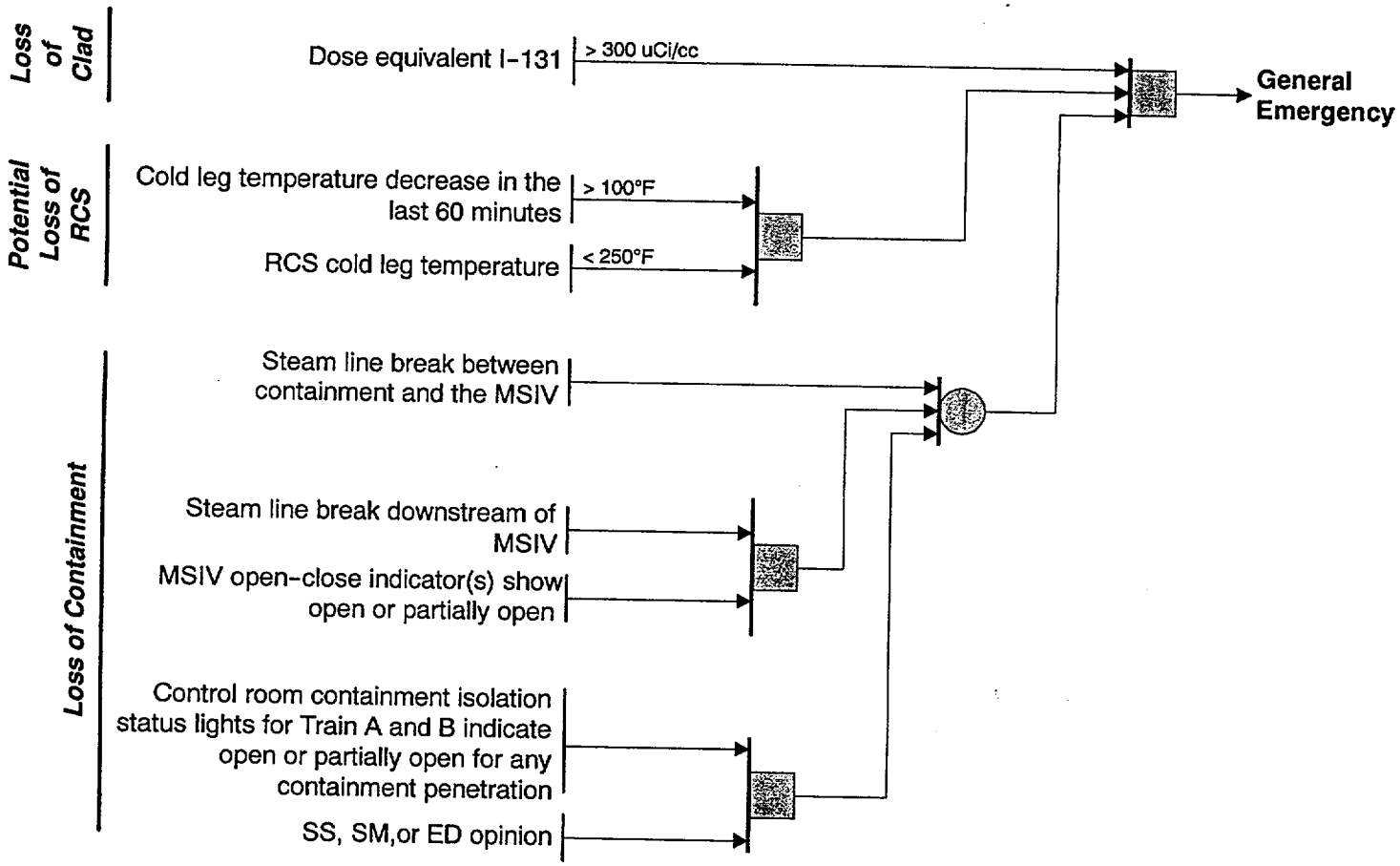

Condition 6: Loss of 2 of 3 Fission Product Barriers

Case 4 : Loss of RCS boundary (LOCA), loss of containment, and high potential for loss of cladding

(EAL Ref Manual 6)

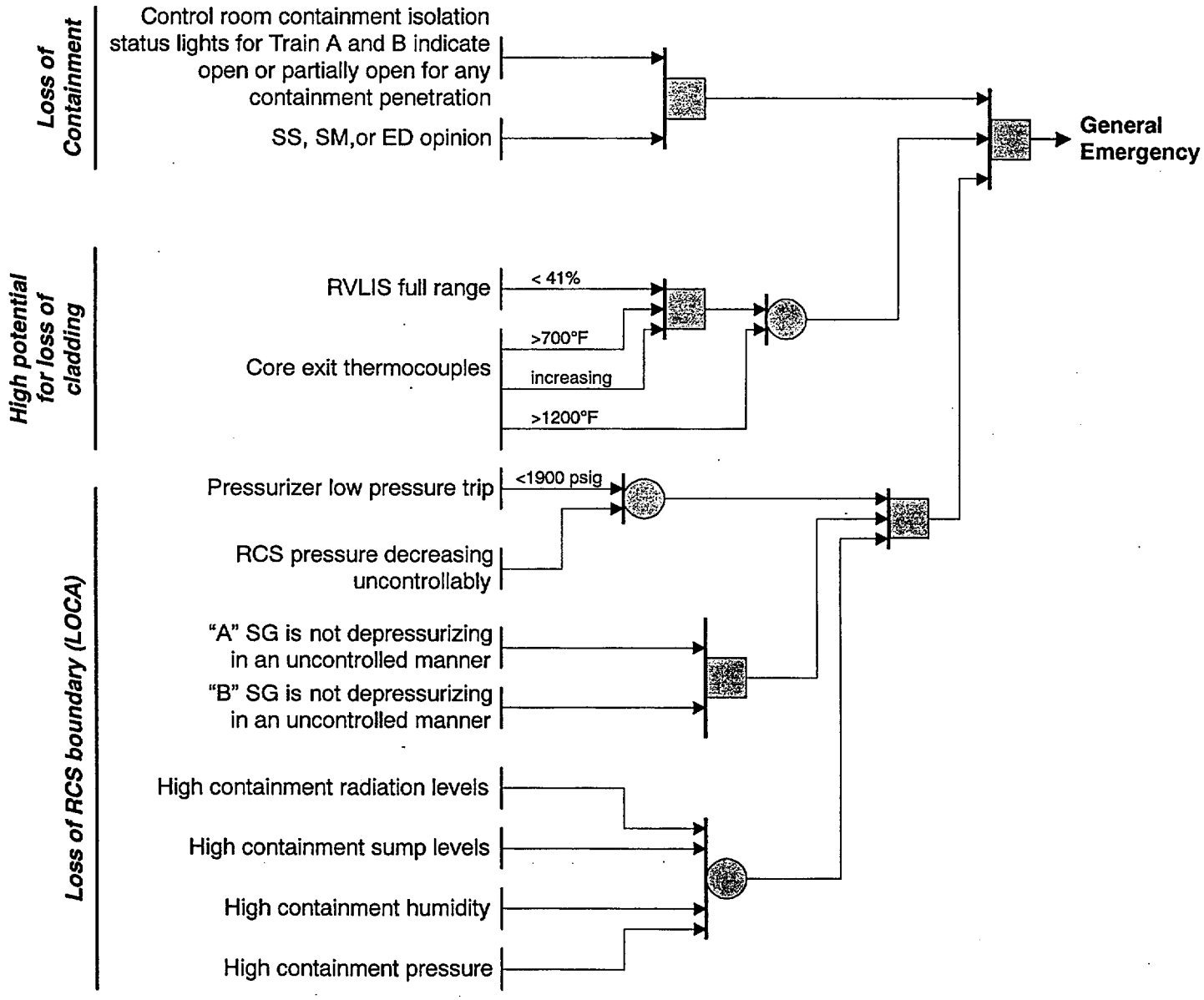

Condition 6: Loss of 2 of 3 Fission Product Barriers

Case 5 : Loss of RCS Boundary (SG Tube Rupture), loss of containment, and high potential for loss of cladding.

(EAL Ref Manual 6)

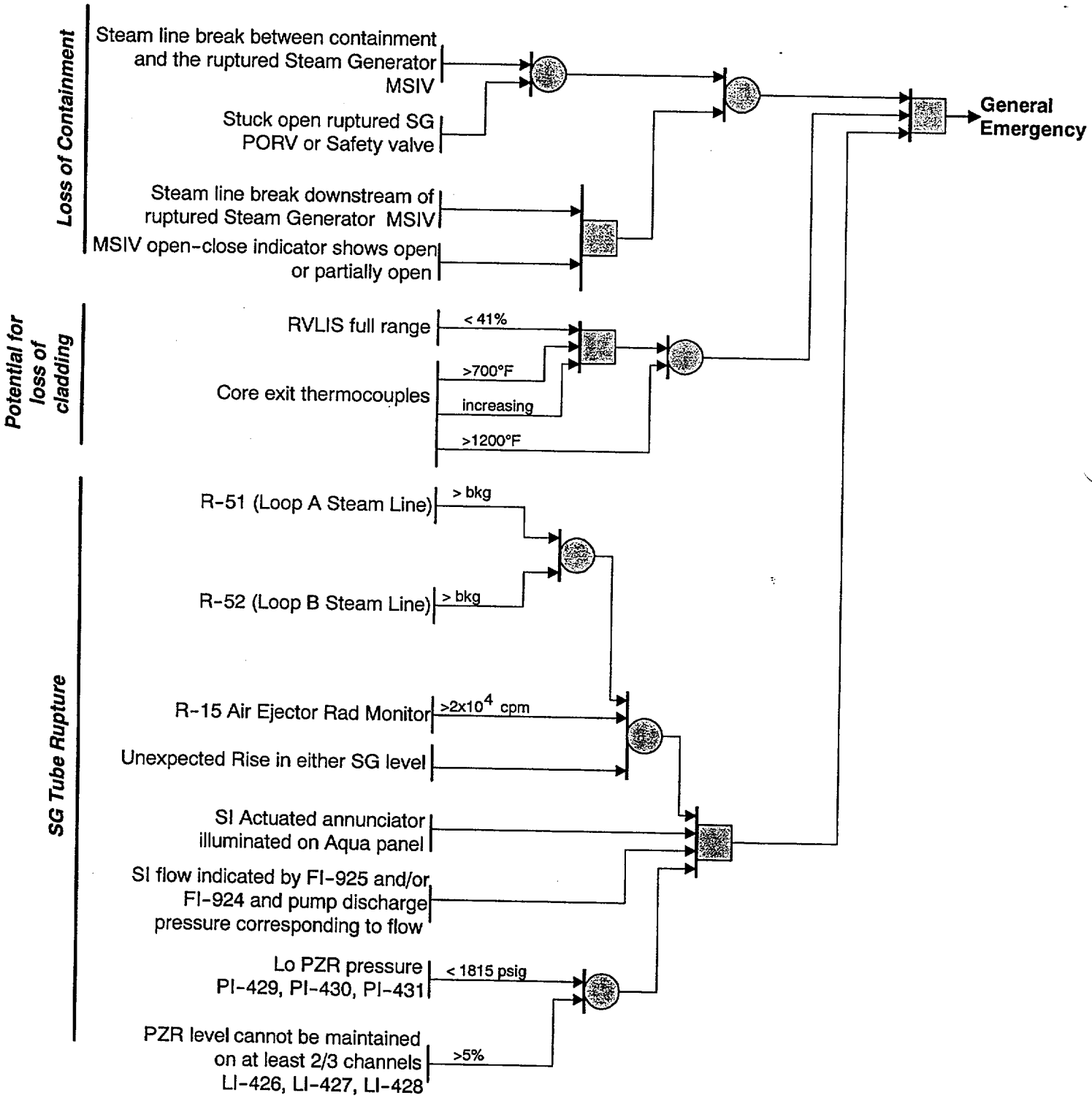

Condition 7 : Secondary Coolant Anomaly

Rapid depressurization of secondary side.

(EAL Ref Manual 7A)

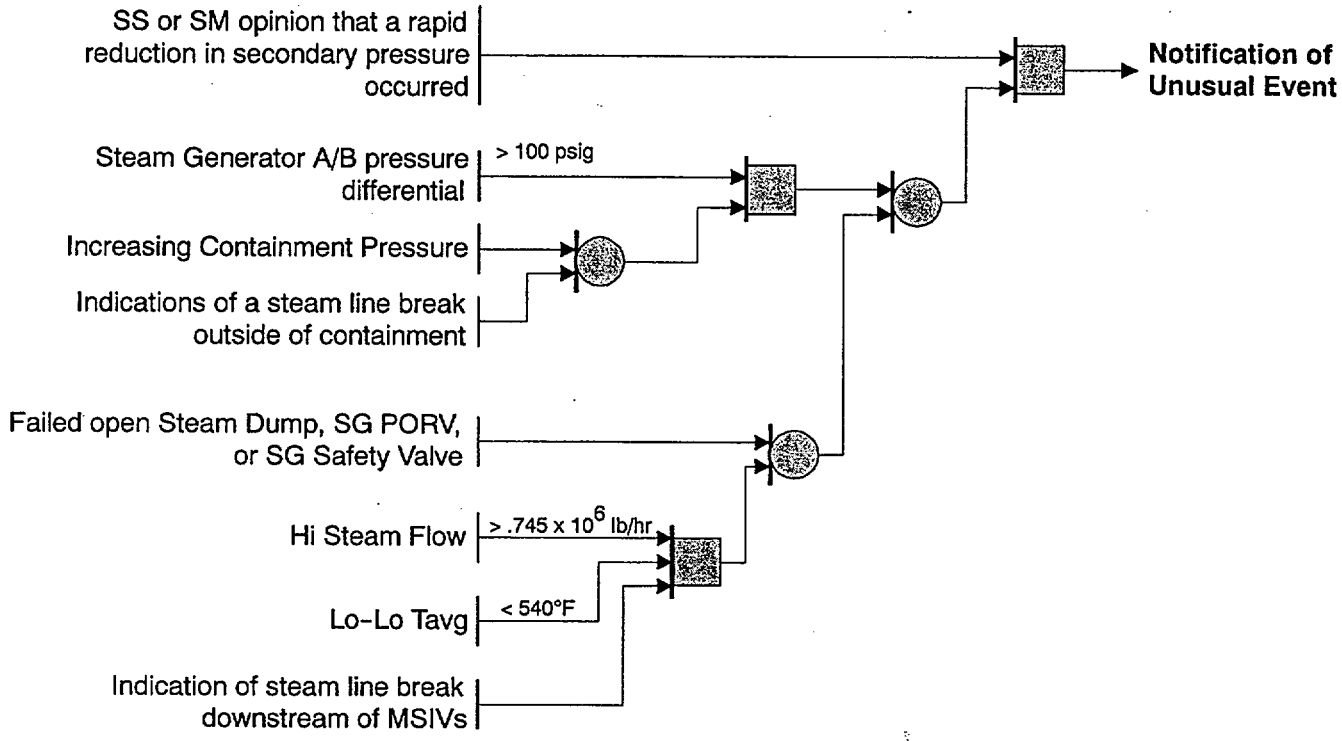

Condition 7 : Secondary Coolant Anomaly

Steam line break inside containment with significant (greater than 10 gpm) primary to secondary leak rate.

(EAL Ref Manual 7B)

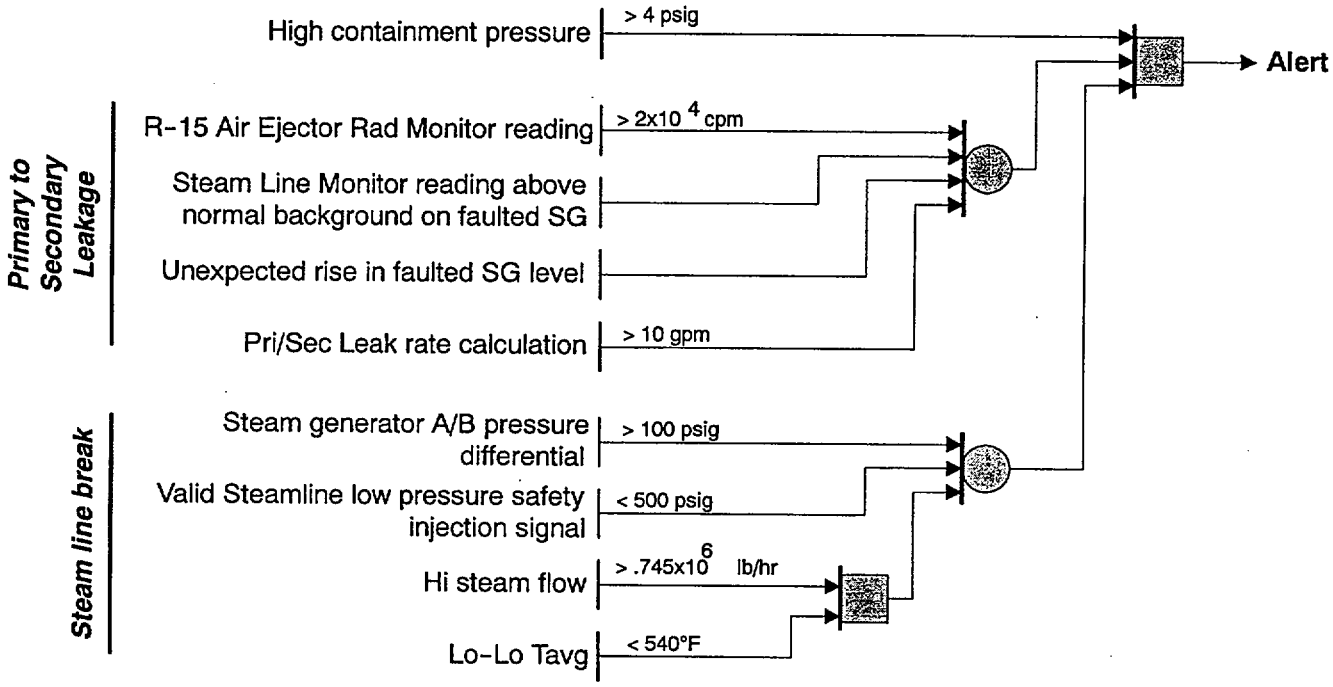

Condition 7 : Secondary Coolant Anomaly

Unisolable steam line break outside containment with significant (greater than 10 gpm) primary to secondary leak rate.

(EAL Ref Manual 7C)

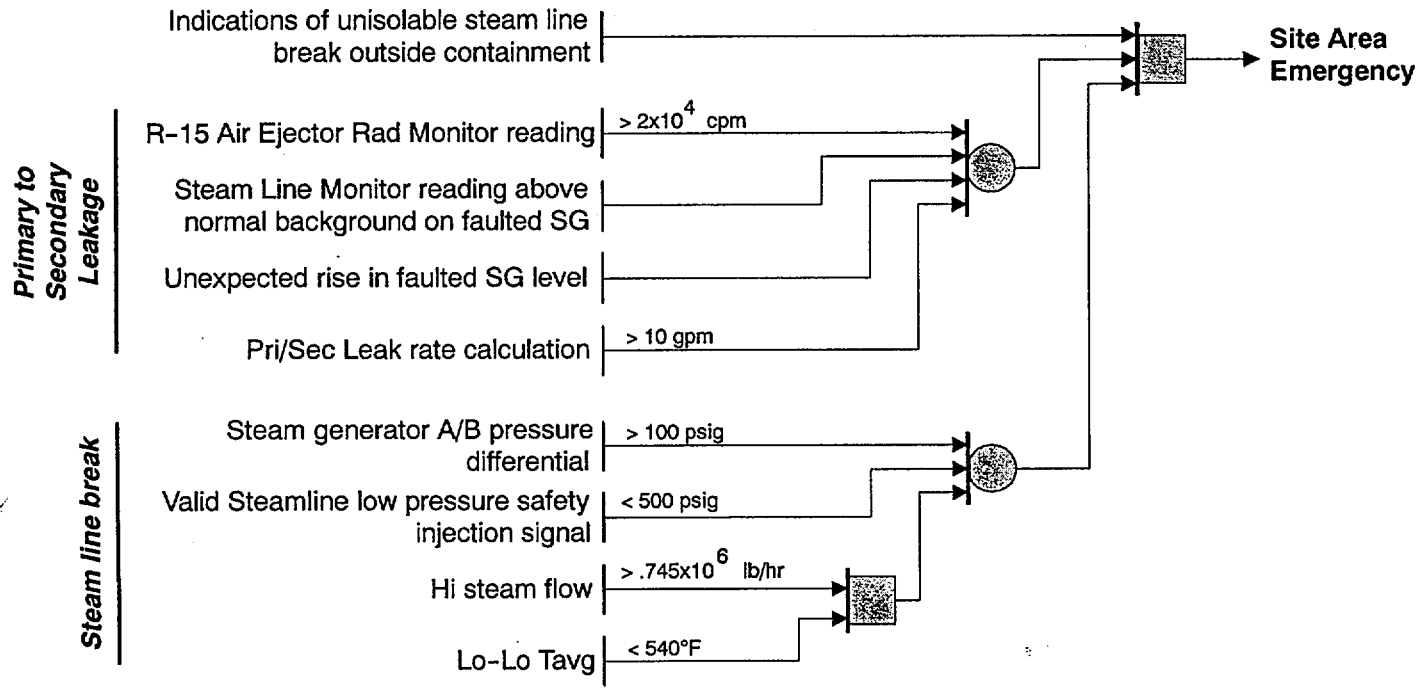

Condition 7 : Secondary Coolant Anomaly

Steam Line break in containment with greater than 50 gpm primary to secondary leakage and indication of fuel damage

(EAL Ref Manual 7D)

Note:	If steam line break is outside containment with SG tube rupture and fuel failure, this may be a General Emergency. See condition #6, case 2.

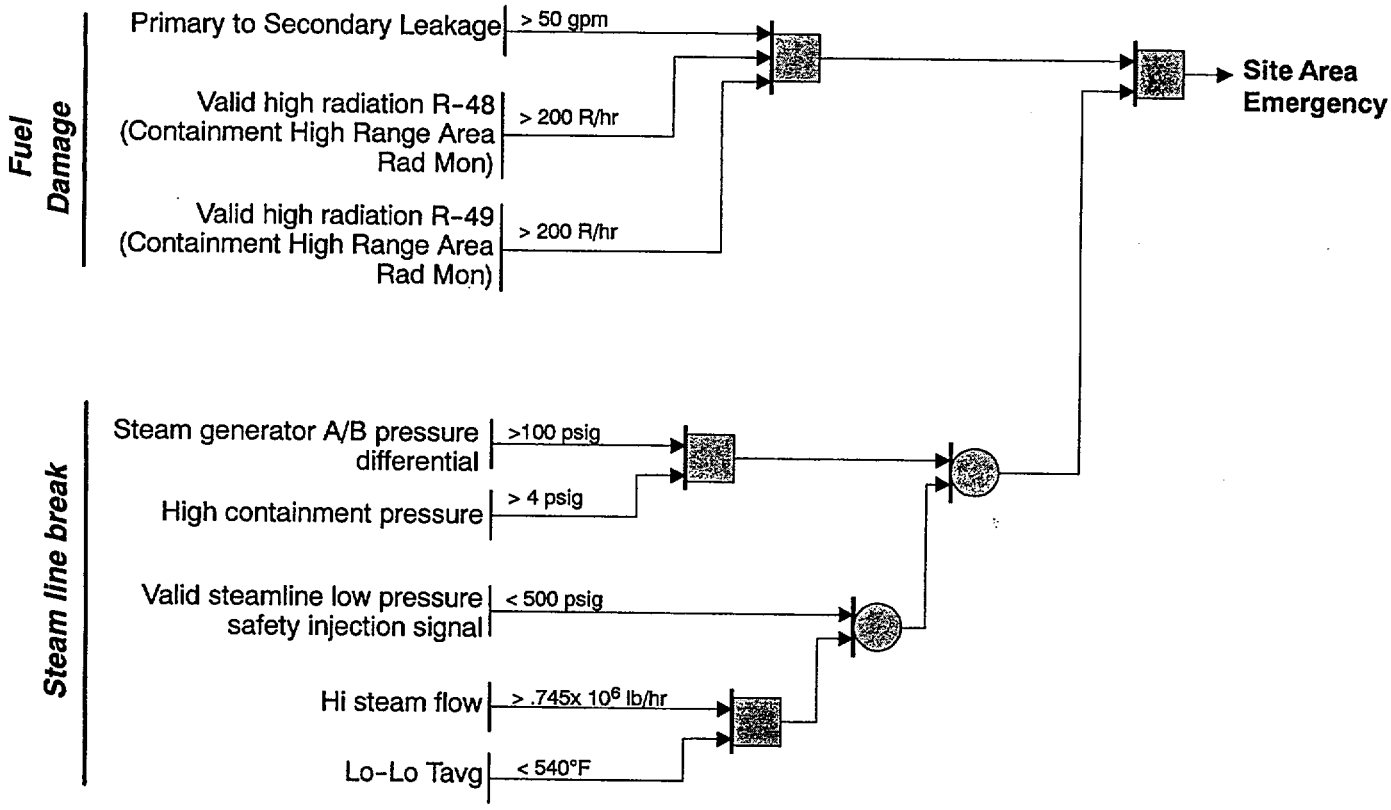

Condition 7 : Secondary Coolant Anomaly

Transient initiated by loss of feedwater and condensate systems (principal heat removal system) followed by failure of emergency feedwater system for extended period. Core melting possible in several hours. Ultimate failure of containment likely if core melts.

(EAL Ref Manual 7E)

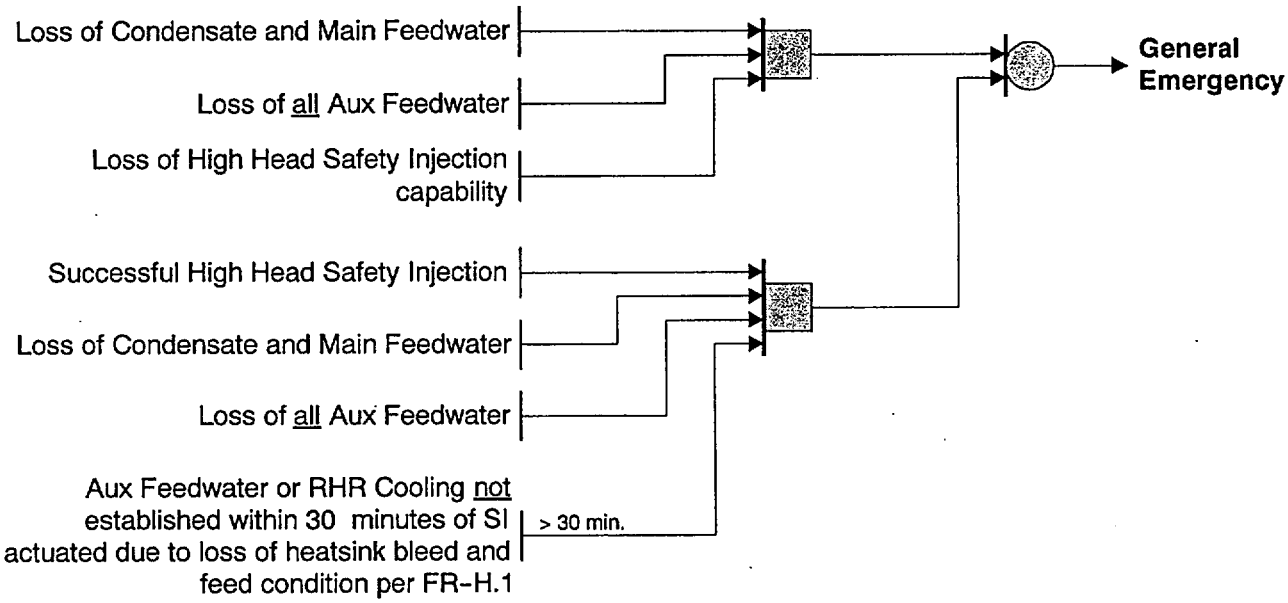

Condition 8 : Radiological Effluents

Airborne Radiological effluent Technical Specifications exceeded

(EAL Ref Manual 8A)

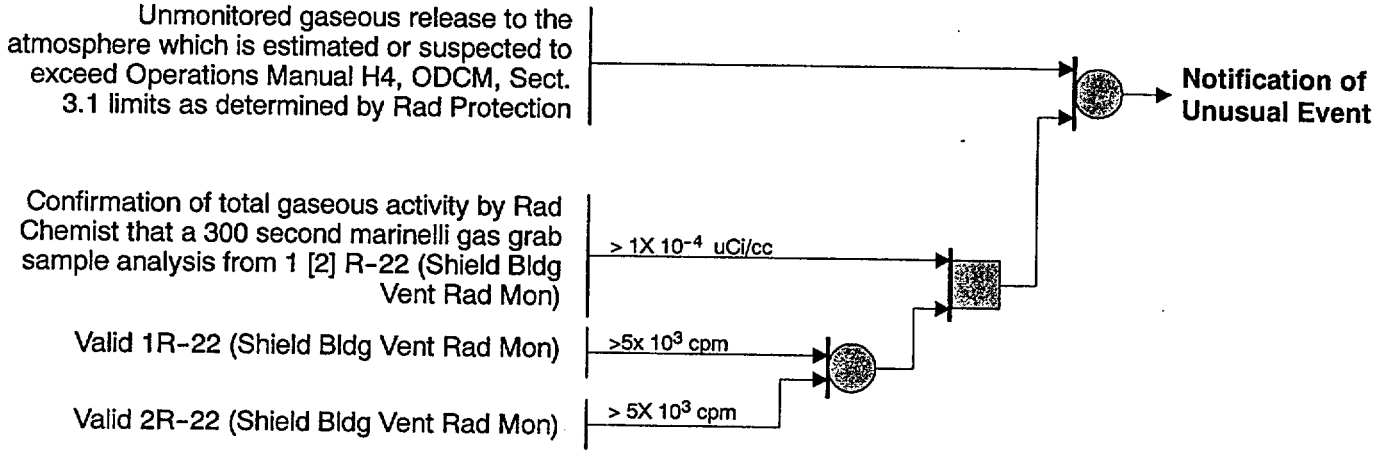

Liquid Radiological effluent Technical Specifications limits exceeded

(EAL Ref Manual 8B)

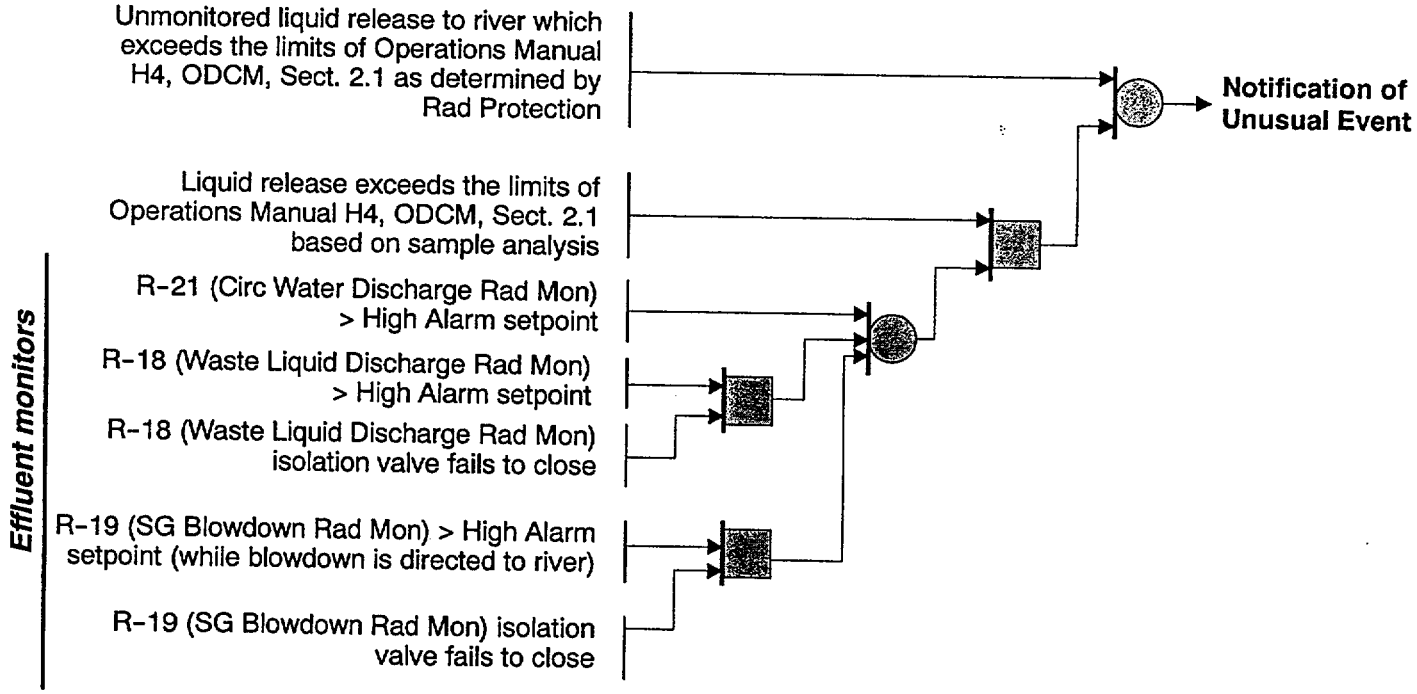

Condition 8 : Radiological Effluents

Liquid Radiological effuent greater than ten times Technical Specification limits.

(EAL Ref Manual 8C)

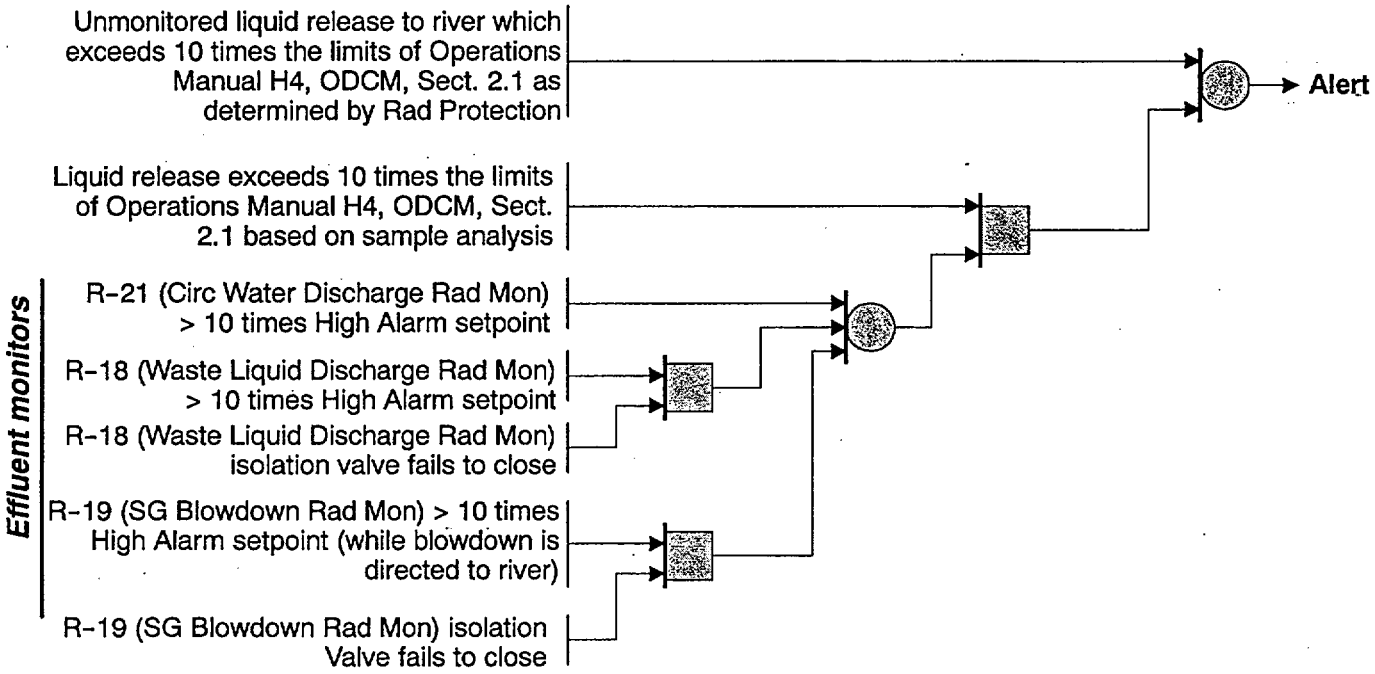

Airborne Radiological effluents greater than ten times Technical Specification instantaneous limits (an instantaneous rate which, if continued for over two hours, would result in about 1 mrem TEDE at the site boundary under average met conditions. TEDE = Total Dose Equivalent).

(EAL Ref Manual 8D)

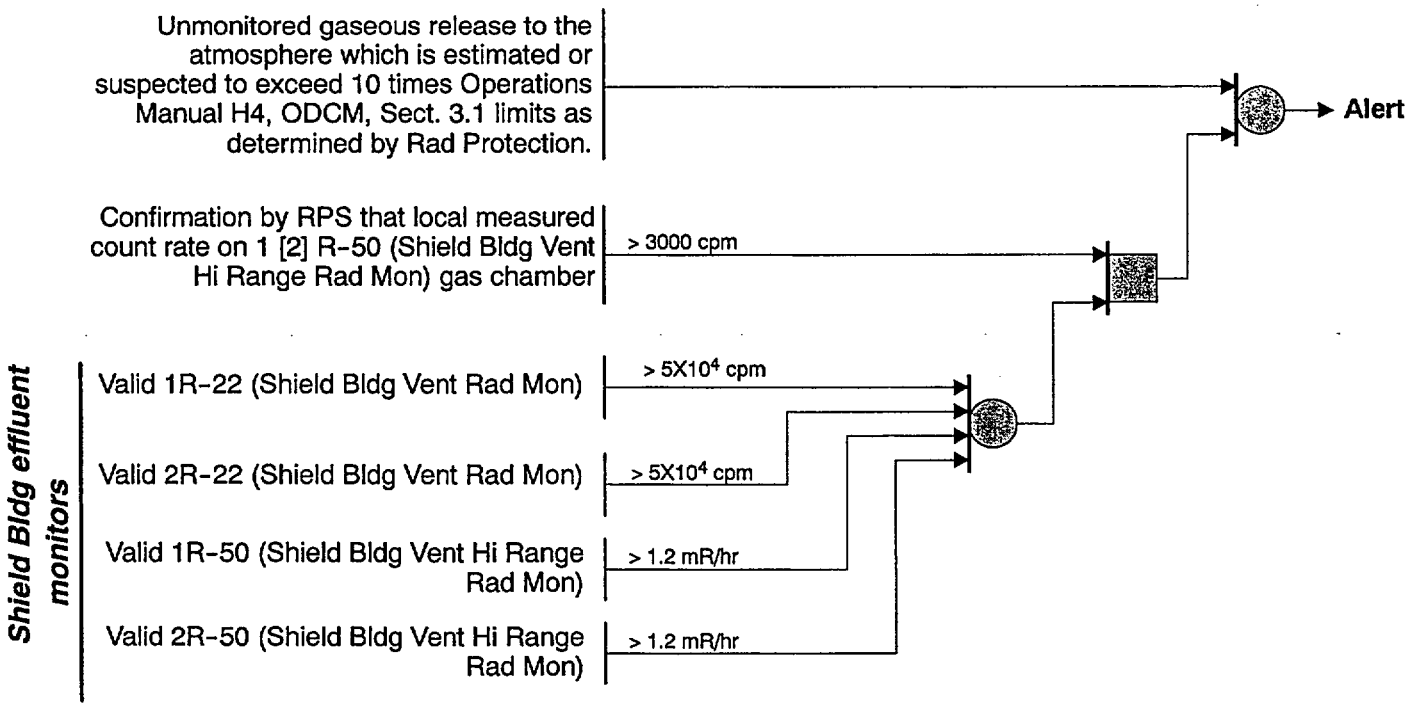

Condition 8 : Radiological Effluents

Airborne Effluent monitors detect levels corresponding to greater than:

1. **50 mrem/hr TEDE for one-half hour, or**
2. **250 mrem/hr Thyroid CDE for one-half hour, or**
3. **500 mrem/hr TEDE for two minutes, or**
4. **2500 mrem/hr Thyroid CDE for two minutes**

at the site boundary for adverse meteorology.

TEDE = Total Effective Dose Equivalent.
CDE = Committed Dose Equivalent.

(EAL Ref Manual 8E)

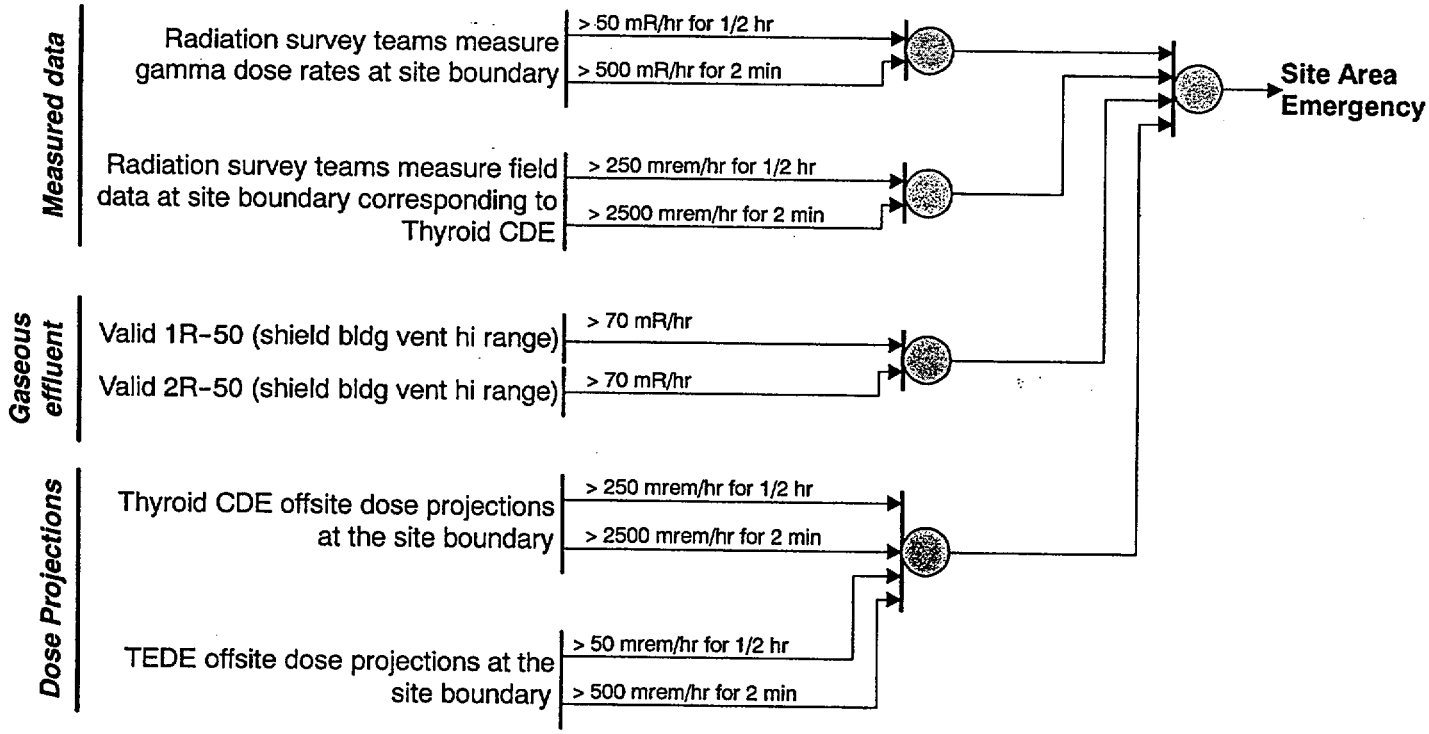

Condition 8 : Radiological Effluents

Effluent monitors detect levels corresponding to:

1. 1 rem/hr TEDE, or

2. 5 rem/hr Thyroid CDE

at the site boundary under actual meteorological conditions.

TEDE = Total Effective Dose Equivalent.
CDE = Committed Dose Equivalent.

(EAL Ref Manual 8F)

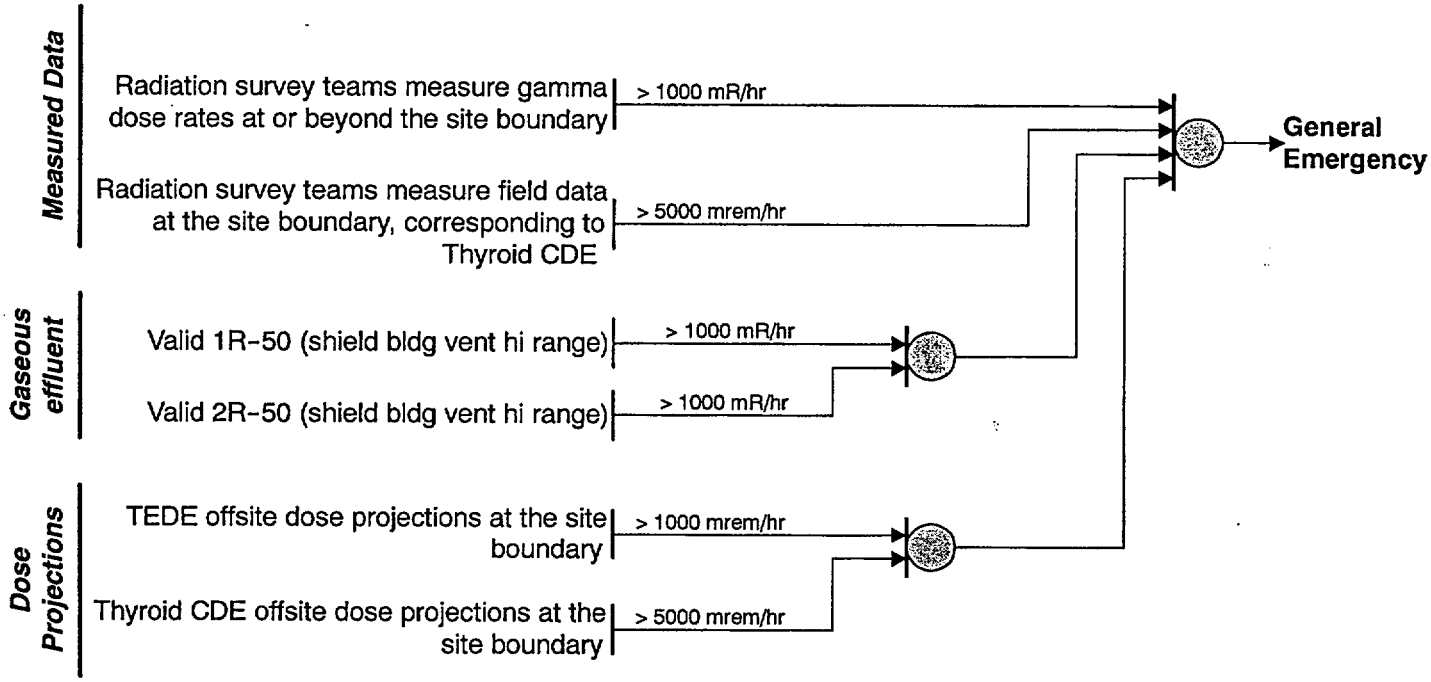

Condition 8 : Radiological Effluents

Radiation levels or airborne contamination which indicate a severe degradation in the control of radioactive materials (e.g., increase of factor of 1000 in direct radiation readings within facility).

(EAL Ref Manual 8G)

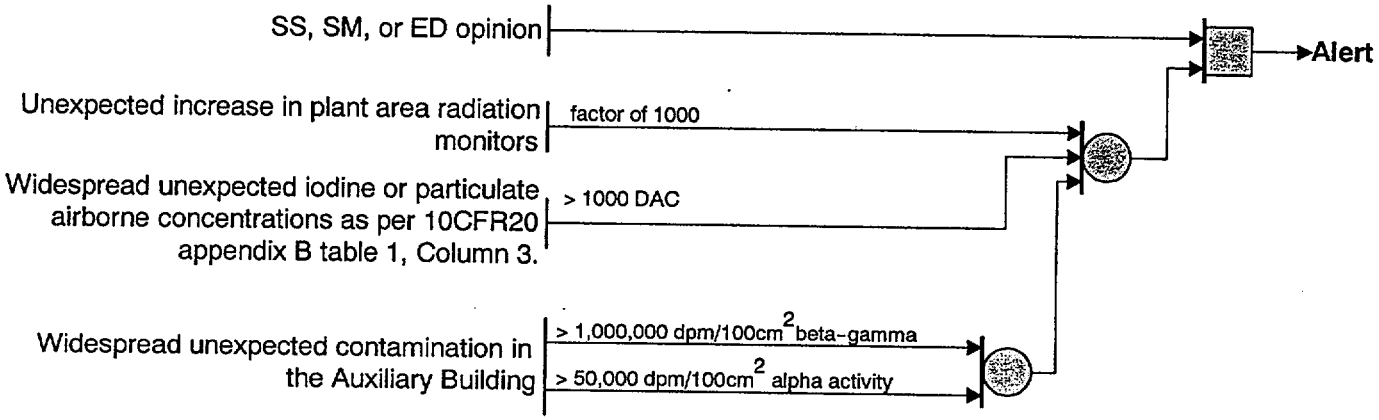

Condition 9 : Major Electrical Failures

Loss of Offsite Power **(EAL Ref Manual 9A)**

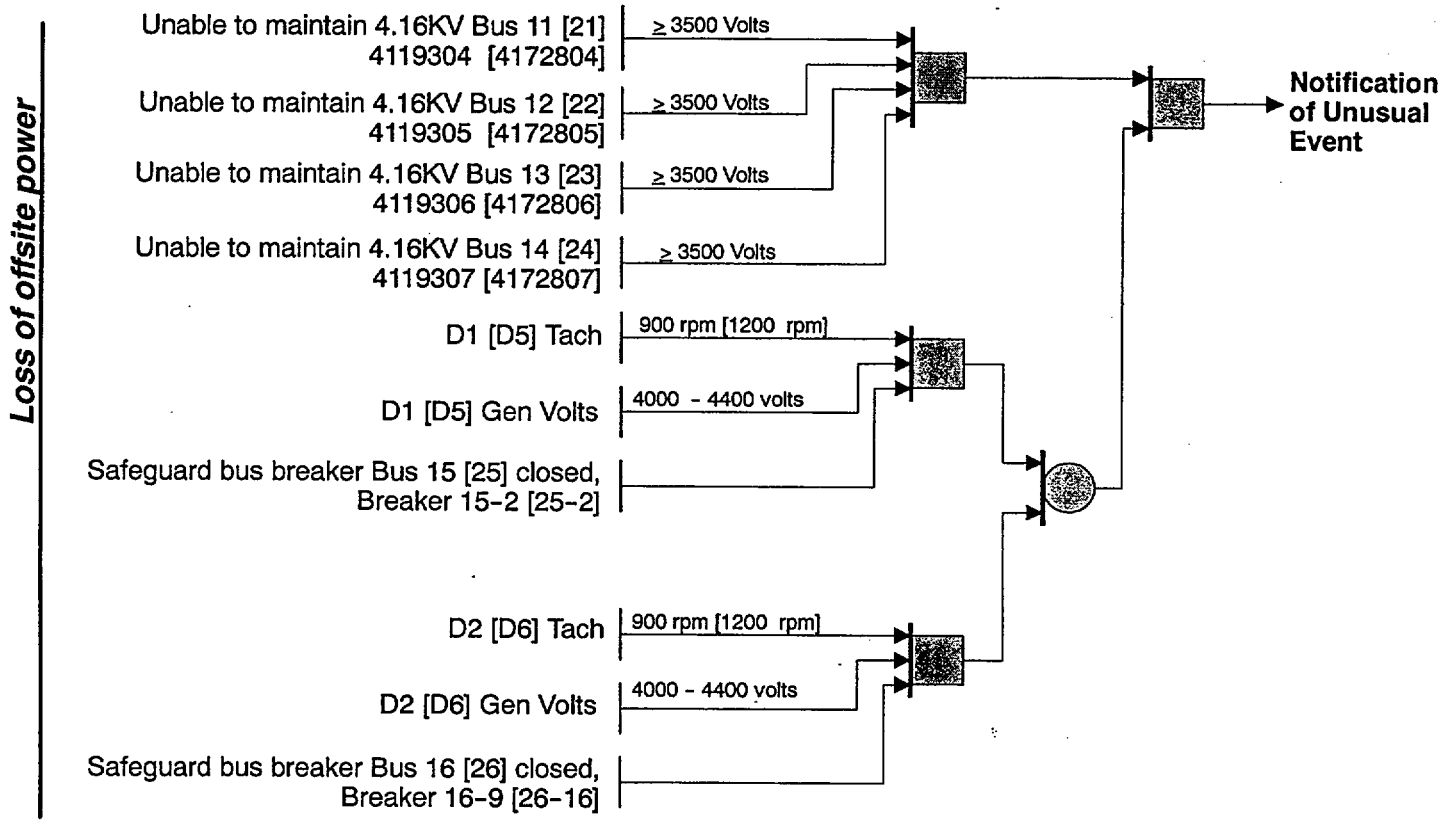

Loss of onsite AC power capability **(EAL Ref Manual 9B)**

Loss of D1 & D2 [D5 & D6} diesel generators when they are required to be operable by Tech Specs → **Notification of Unusual Event**

This acceptance criteria is applicable to the steps denoted with an asterisk

Condition 9 : Major Electrical Failures

Loss of offsite power and loss of all onsite AC power (See Site Area Emergency for extended loss).

(EAL Ref Manual 9C)

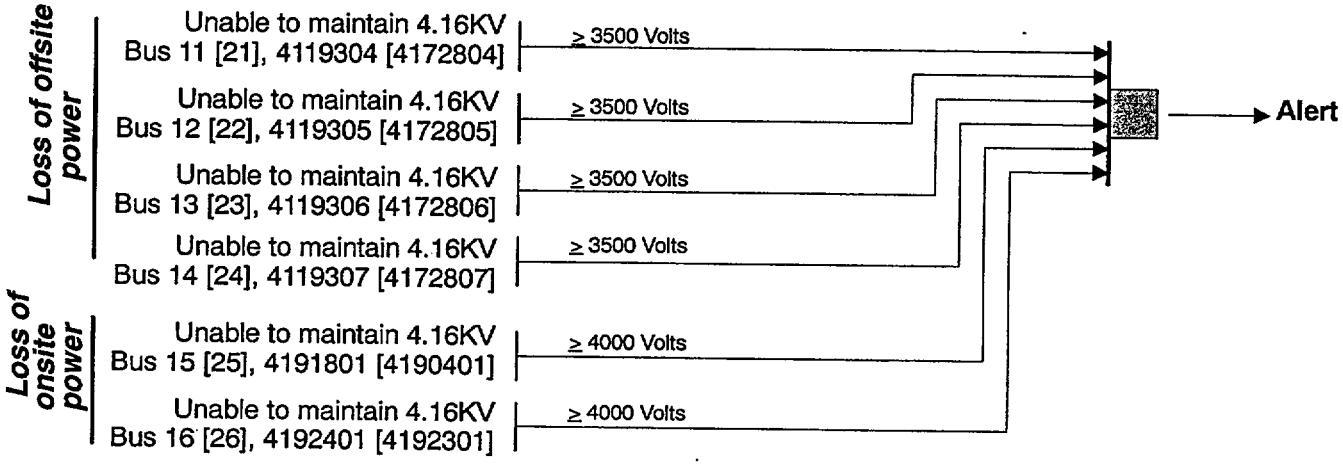

Loss of offsite power and loss of of onsite AC power for more than 15 minutes.

(EAL Ref Manual 9D)

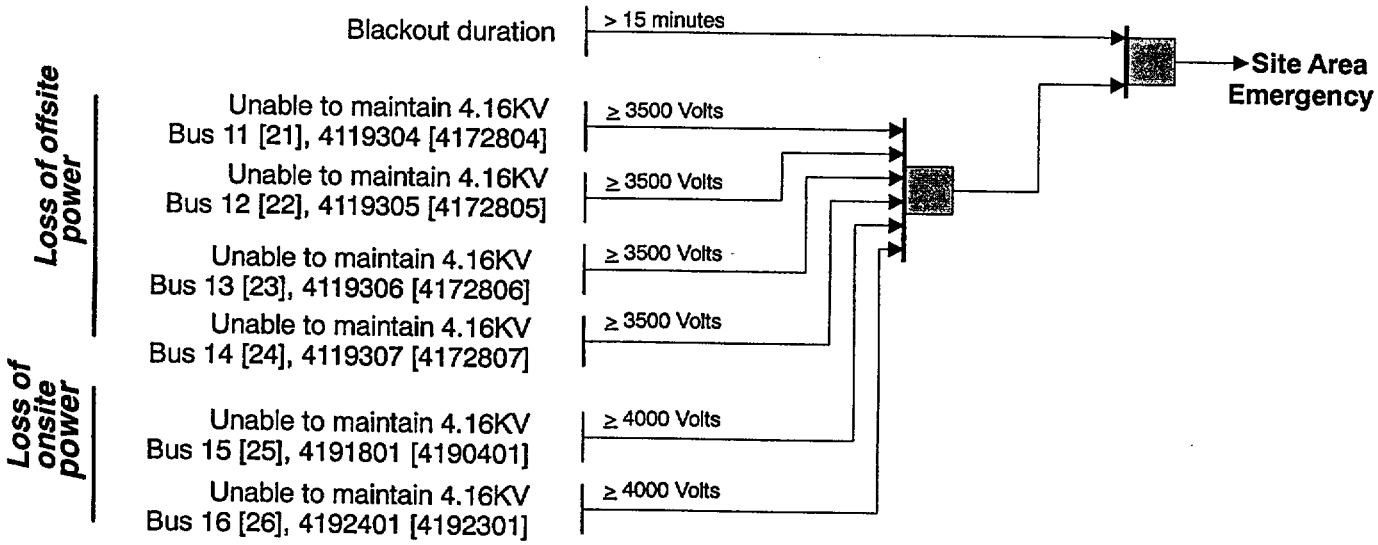

Condition 9 : Major Electrical Failures

Failure of offsite and onsite power along with total loss of emergency feedwater makup capability for greater than 2 hours. This would lead to eventual core melt and likely failure of containment.

(EAL Ref Manual 9E)

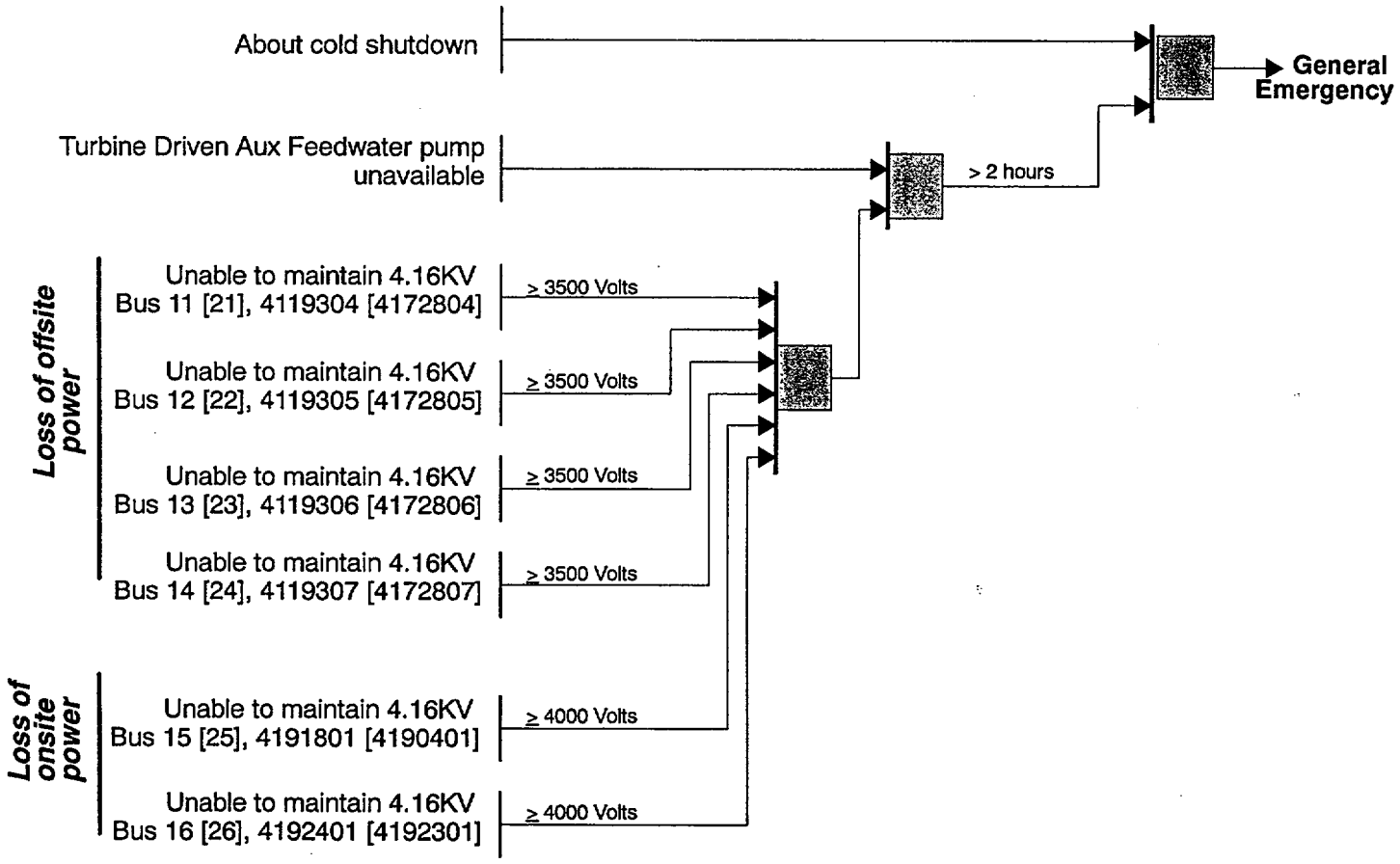

Condition 9 : Major Electrical Failures

Loss of all onsite DC power (See Site Area Emergency for extended loss).

(EAL Ref Manual 9F)

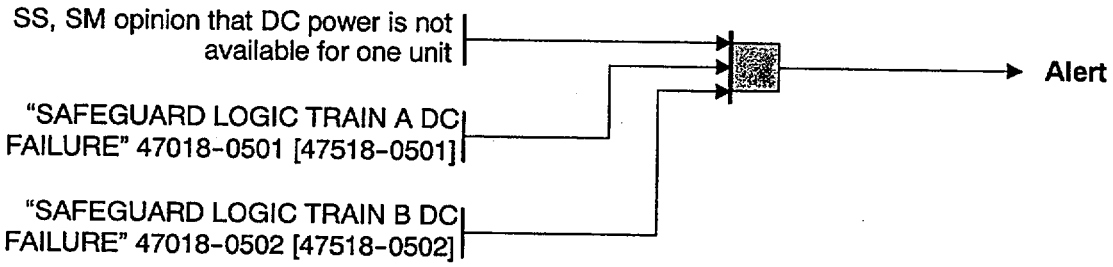

Loss of all vital onsite DC power for more than 15 minutes.

(EAL Ref Manual 9G)

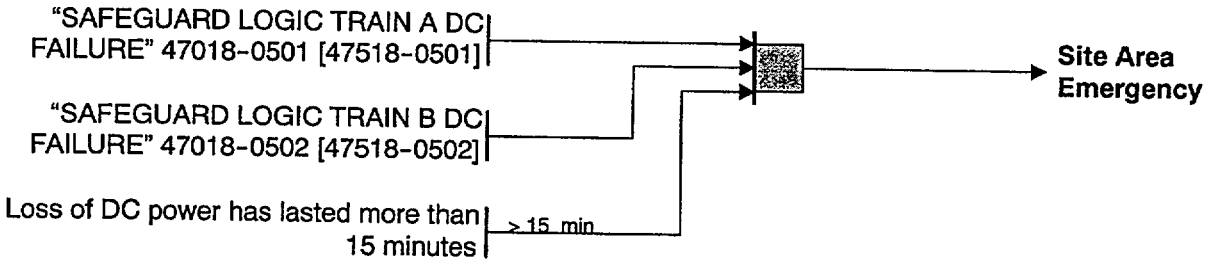

Condition 10 : Control Room Evacuations

Evacuation of the Control Room anticipated or required with control of shutdown systems established from Hot Shutdown Panels and local stations.

(EAL Ref Manual 10A)

SS,SM, or ED determines evacuation of Control Room is anticipated or required with control of shutdown systems established from Hot shutdown Panels and local stations → **Alert**

Note: If reason for evacuation is fire in Control Room or Relay Room, see initiating condition 11C, "Fire compromising the functions of safety systems" for possible reclassification.

Evacuation of the Control Room and control of shutdown systems not established from hot shutdown panel and local stations within 15 minutes.

(EAL Ref Manual 10B)

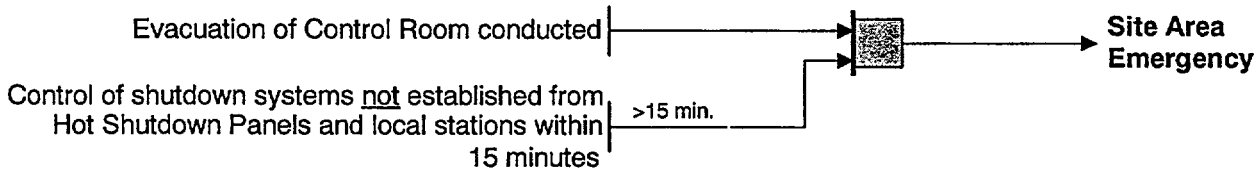

Condition 11 : Fires

Fire within the plant or ISFSI lasting more than 10 minutes.

(EAL Ref Manual 11A)

Note: FIRE: is combustion characterized by heat and light (flame). Sources of smoke such as slipping drive belts or overheated electrical equipment do not constitute fires. Observation of flame is preferred but is NOT required if large quantities of smoke and heat are observed.

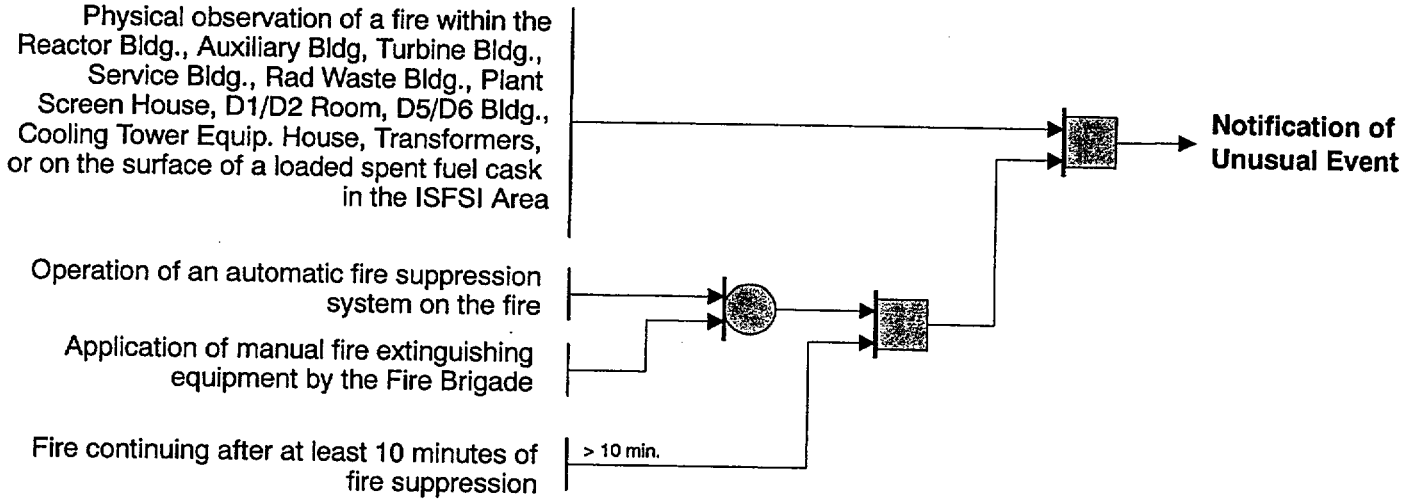

Fire potentially affecting safety systems.

(EAL Ref Manual 11B)

Note: FIRE: is combustion characterized by heat and light (flame). Sources of smoke such as slipping drive belts or overheated electrical equipment do not constitute fires. Observation of flame is preferred but is NOT required if large quantities of smoke and heat are observed.

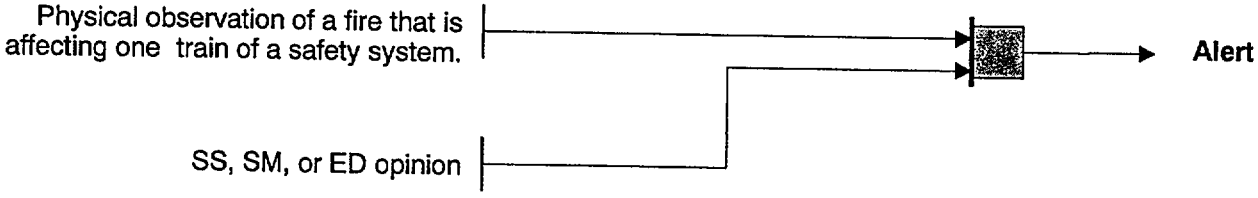

Condition 11 : Fires

Fire compromising the functions of safaety systems.

(EAL Ref Manual 11C)

Note: FIRE: is combustion characterized by heat and light (flame). Soruces of smoke such as slipping drive belts or overheated electrical equipment do not consititute fires. Observation of flame is preferred but is NOT required if large quantities of smoke and heat are observed.

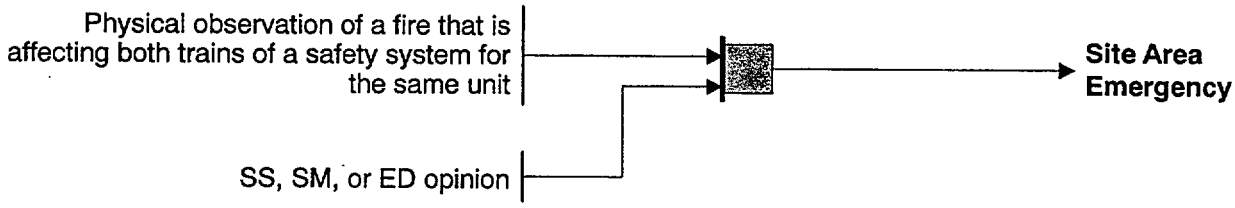

Condition 12 : Plant Shutdown Functions

Nonfunctional alarms in the Control Room.

(EAL Ref Manual 12B)

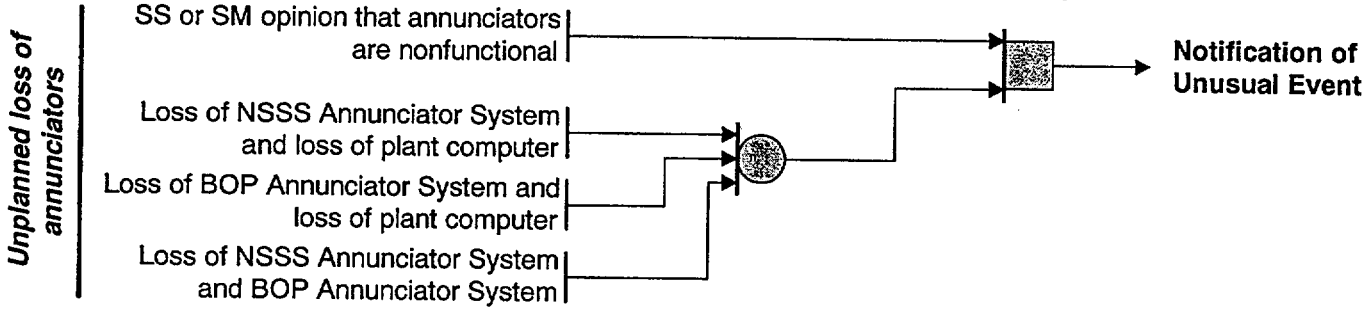

Most or all alarms (annunciators) lost.

(EAL Ref Manual 12C)

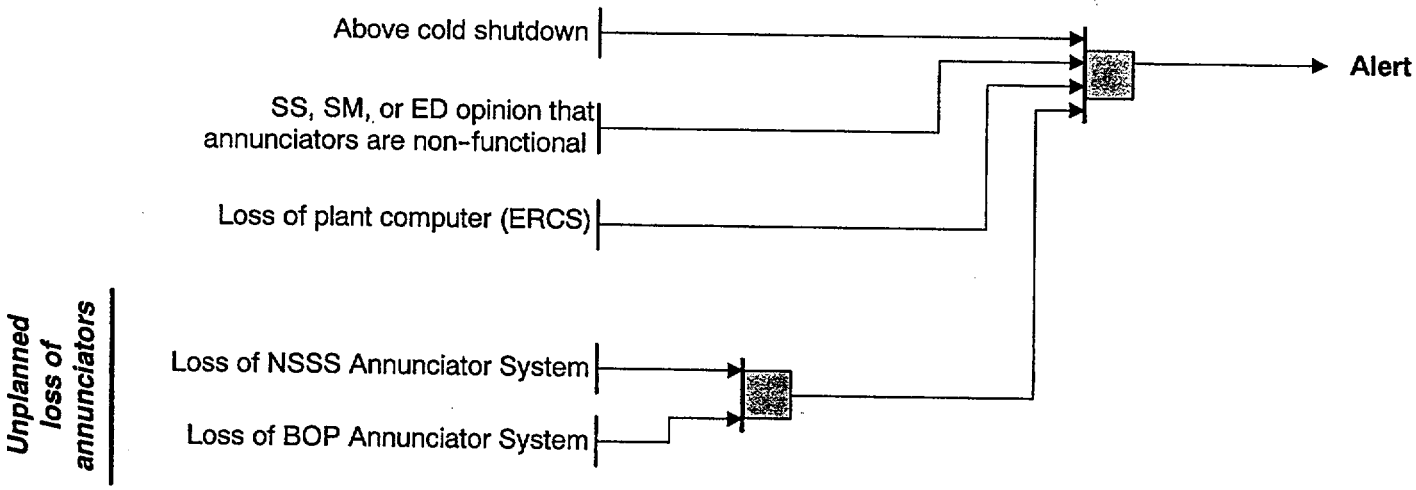

Condition 12 : Plant Shutdown Functions

Most or all alarms (annunciators) lost and plant transient initiated or in progress.

(EAL Ref Manual 12D)

Unplanned loss of annunciators

- Above cold shutdown
- Loss of plant computer (ERCS)
- SS, SM, or ED opinion that annunciators are non-functional
- SS, SM, or ED opinion that a transient has occurred or is in progress
- Loss of NSSS Annunciator System
- Loss of BOP Annunciator System

→ **Site Area Emergency**

Condition 12 : Plant Shutdown Functions

Momentary loss of core cooling needed for plant Cold Shutdown.

(EAL Ref Manual 12E)

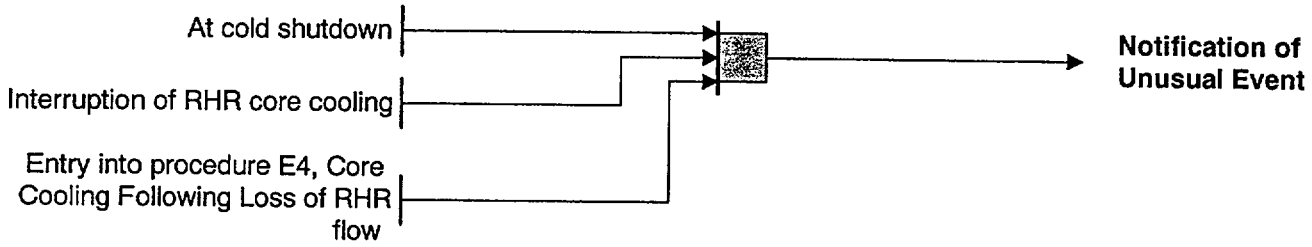

Inability to maintain plant in Cold Shutdown.

(EAL Ref Manual 12F)

Loss of water level that has uncovered or will uncover the fuel in the reactor vessel while at Cold Shutdown.

(EAL Ref Manual 12G)

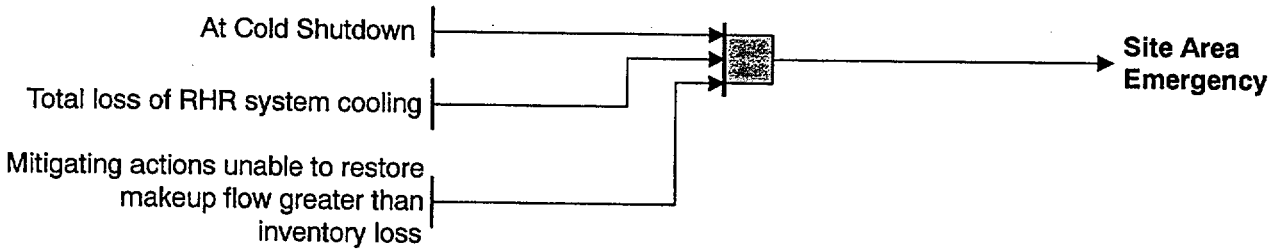

Condition 12 : Plant Shutdown Functions

Complete loss of any function needed for plant hot shutdown. (Also see Condition #7 for possible General if feed and bleed is initiated).

(EAL Ref Manual 12H)

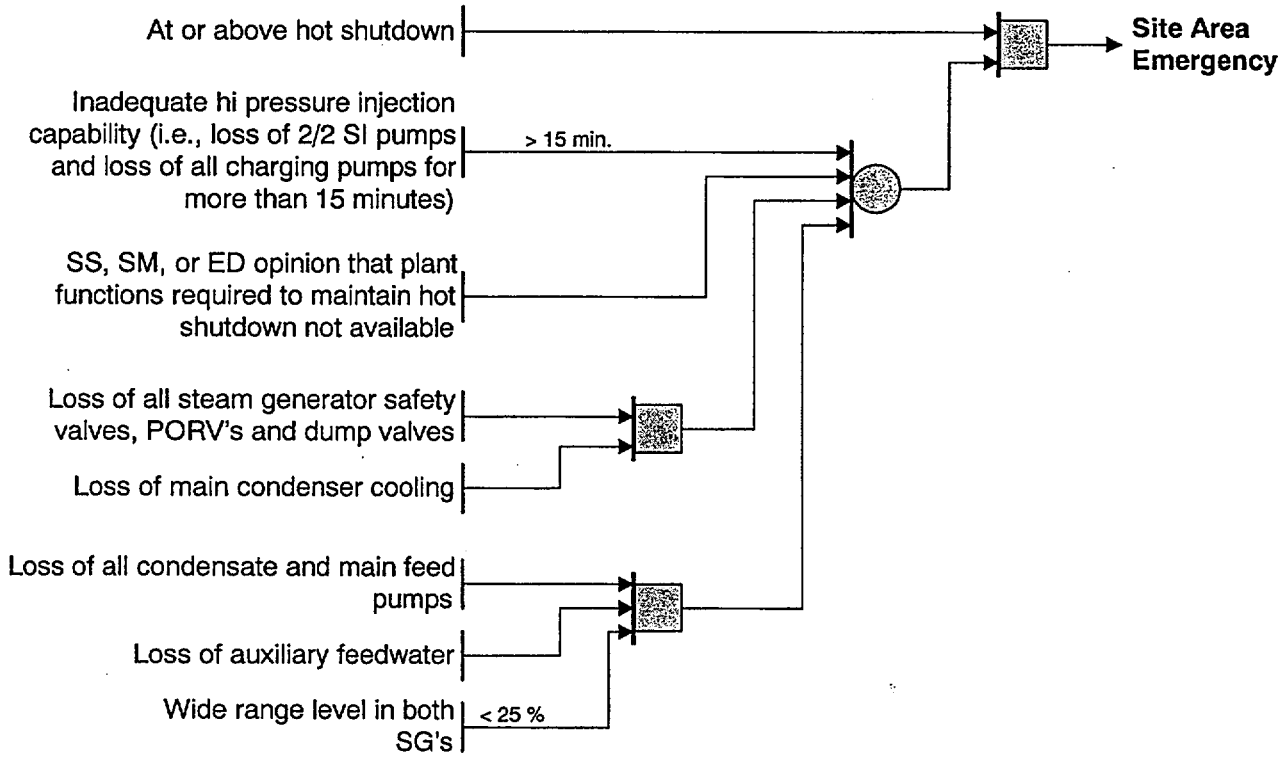

Condition 12 : Plant Shutdown Functions

Turbine failure requiring a reactor / turbine trip.

(EAL Ref Manual 12I)

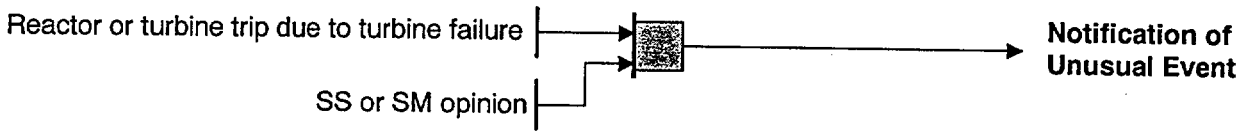

Turbine failure causing casing penetration.

(EAL Ref Manual 12J)

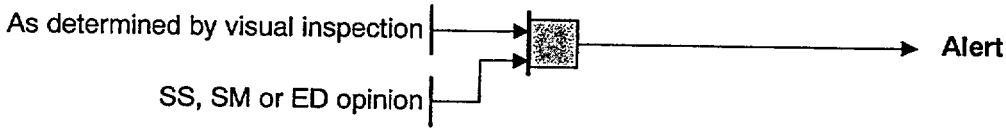

Condition 12 : Plant Shutdown Functions

Failure of the reactor protection system to initiate and complete a trip which brings the reactor subcritical.

(EAL Ref Manual 12K)

Note If a manual trip has been successfully completed, then declare an NUE based on Condition 20 and report that the Alert conditions were met for a period of time

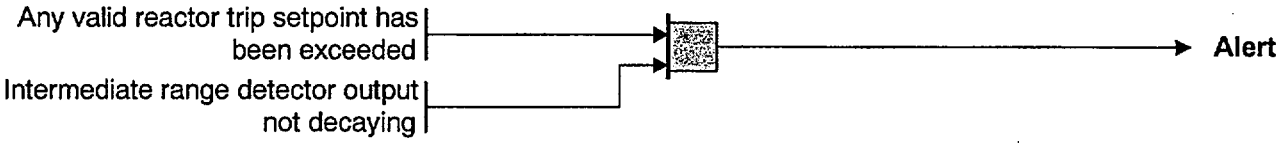

Transient requiring operation of shutdown systems with failure to trip (continued power generation but no core damage immediately evident).

(EAL Ref Manual 12L)

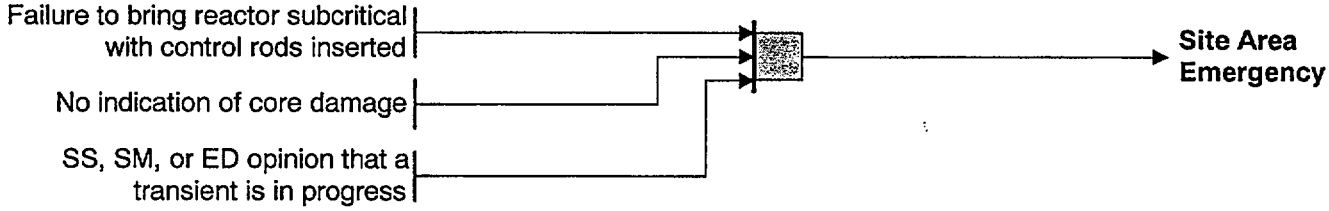

Transient requiring operation of shutdown systems with failure to trip which results in core damage or additional failure of core cooling and makeup systems (which could lead to core melt).

(EAL Ref Manual 12M)

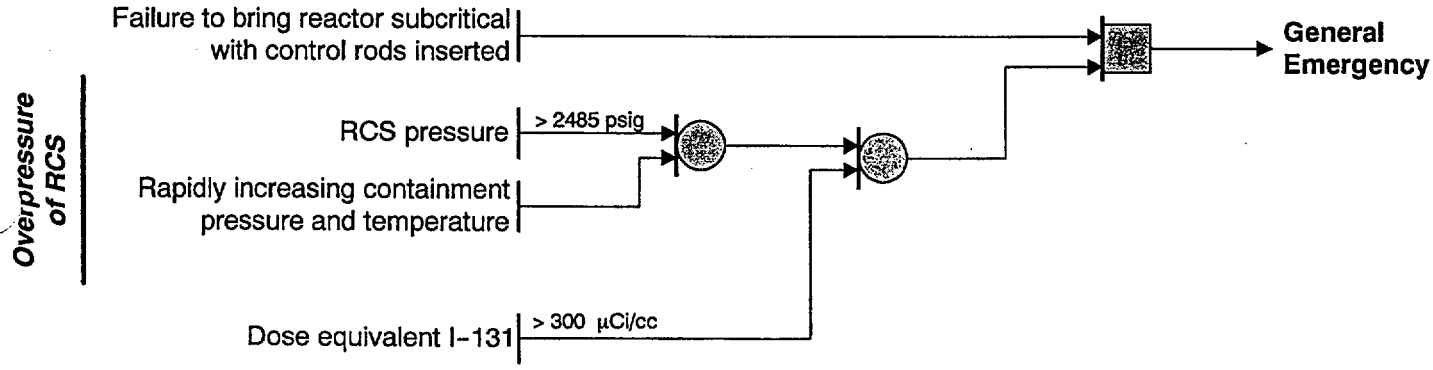

Condition 13 : Fuel Handling Accidents

Fuel damage accident with release of radioactivity to containment.

(EAL Ref Manual 13A)

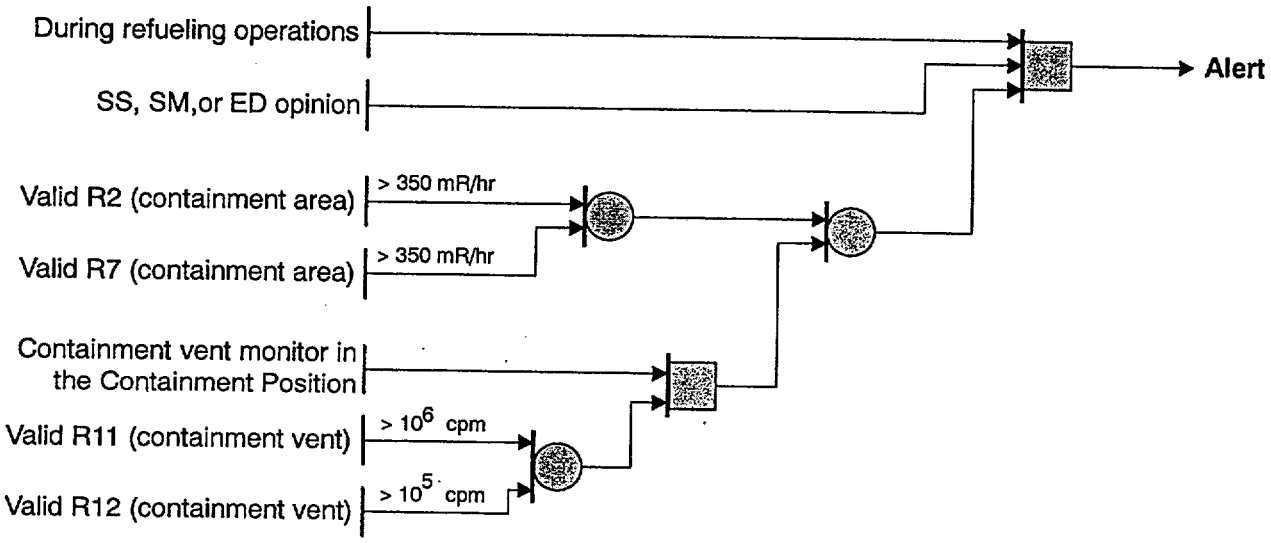

Fuel damage accident with release of radioactivity to the fuel handling building.

(EAL Ref Manual 13B)

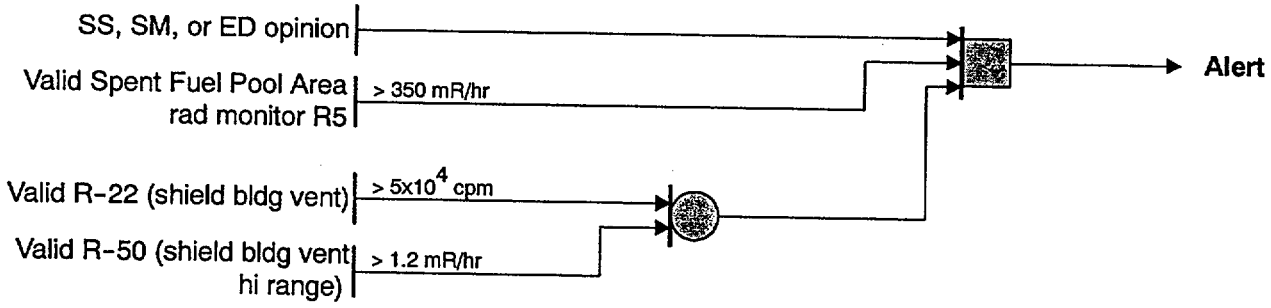

Condition 13 : Fuel Handling Accidents

Major damage to spent fuel in containment or fuel handling building (e.g., large object damages fuel or water loss below fuel level.

(EAL Ref Manual 13C)

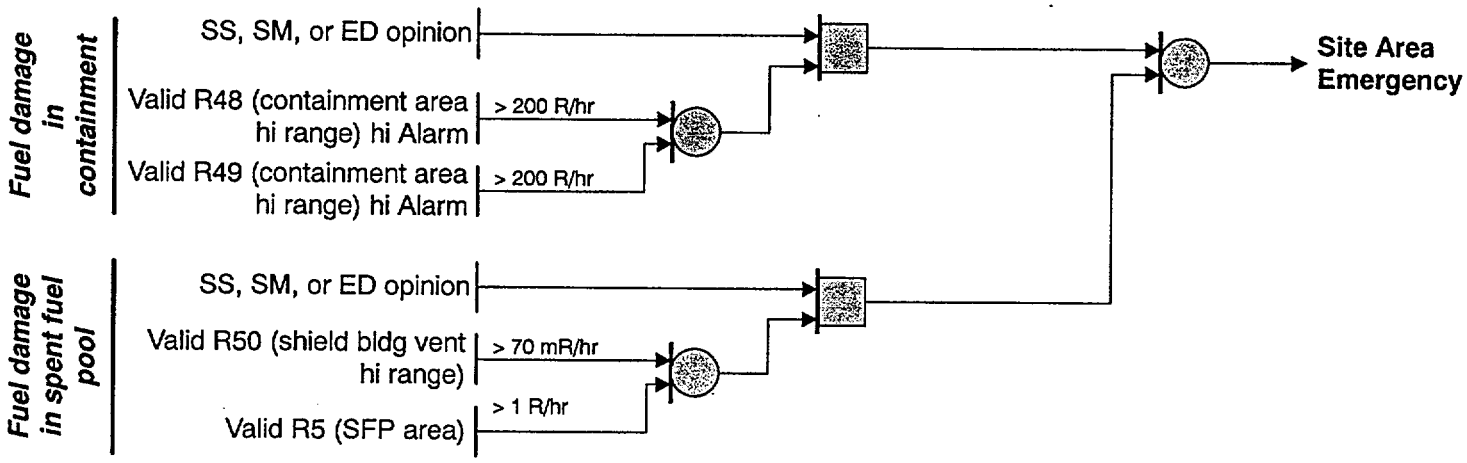

Condition 14 : Coolant Pump

DELETED

Deleted based on NRC Branch Position On Acceptable Deviation From Appendix 1 to NUREG-0654/FEMA-REP-1, July 11, 1994.

Condition 15 : Contaminated Injured Person

DELETED

Deleted based on NRC Branch Position On Acceptable Deviation From Appendix 1 to NUREG-0654/FEMA-REP-1, July 11, 1994.

Condition 16 : Security Threats

Security threat or attempted entry or attempted sabotage

(EAL Ref Manual 16A)

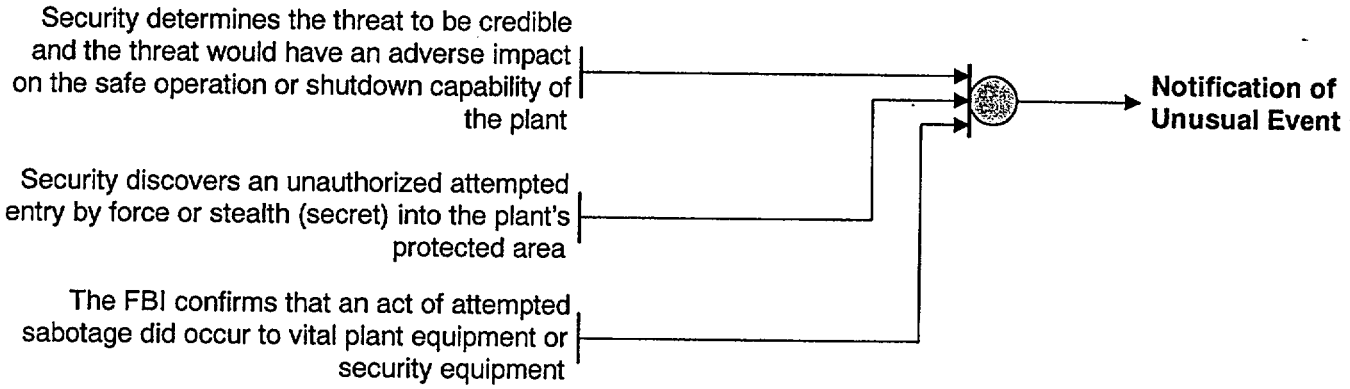

Ongoing security compromise

(EAL Ref Manual 16B)

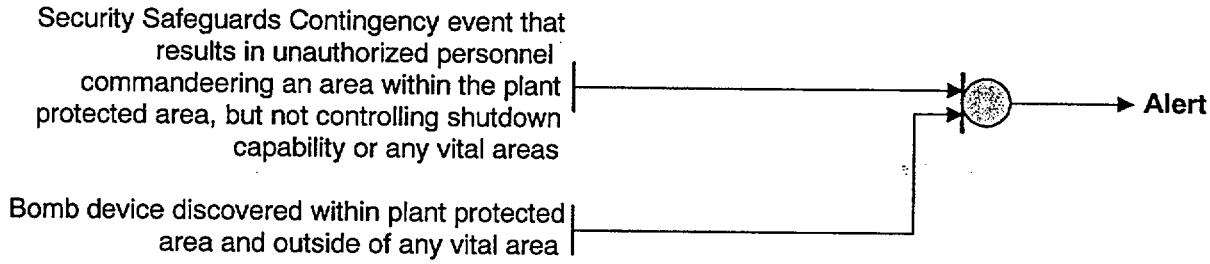

Imminent loss of physical control of the plant

(EAL Ref Manual 16C)

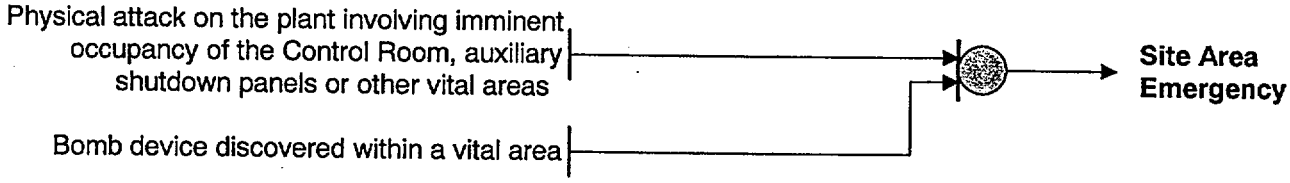

Loss of physical control of the plant

(EAL Ref Manual 16D)

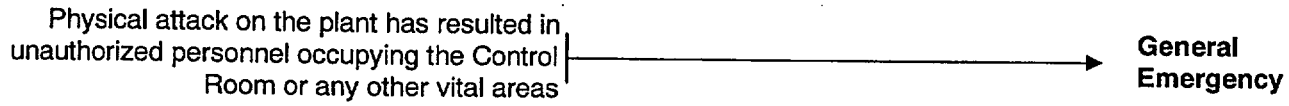

Condition 17 : Hazards to Plant Operations

Aircraft crash onsite or unusual aircraft activity over facility (EAL Ref Manual 17A)

Visual observation

- Reported to the SS or SM
- Aircraft crash onsite within owner controlled fence
- Unusual threatening aircraft activity over facility

→ **Notification of Unusual Event**

Aircraft crash in the protected area (EAL Ref Manual 17B)

Visual observation by plant personnel and/or plant security personnel of an aircraft crash in the protected area → **Alert**

Aircraft crash within protected area and affecting vital structures by impact or fires with plant not in cold shutdown (EAL Ref Manual 17C)

Visual observation by plant personnel and/or plant security personnel of an aircraft crash within protected area and affecting vital structures by impact or fires with either unit above cold shutdown → **Site Area Emergency**

Condition 17 : Hazards to Plant Operations

Near or onsite explosion (EAL Ref Manual 17D)

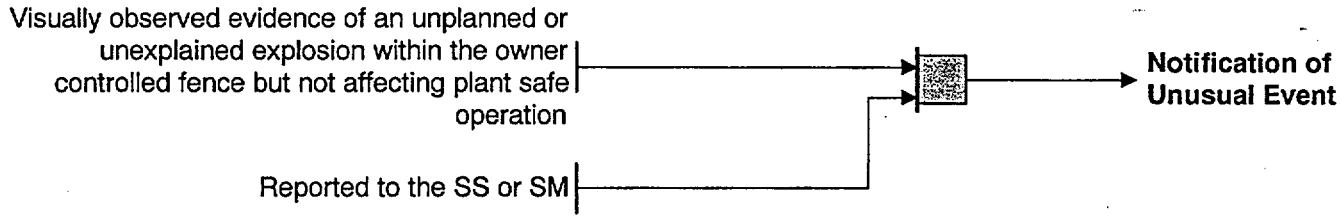

Known explosion damage to facility affecting plant operation (EAL Ref Manual 17E)

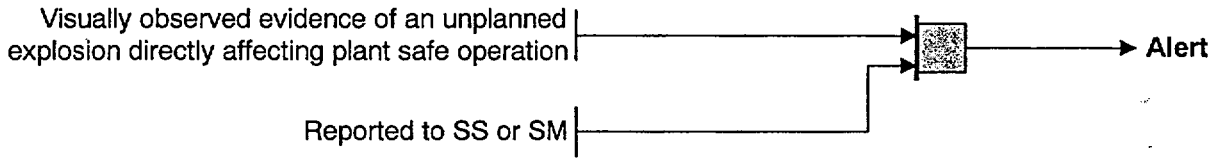

Condition 17 : Hazards to Plant Operations

Missile impacts from whatever source on facility

(EAL Ref Manual 17F)

Visually observed evidence by plant personnel and/or plant security personnel of missile impacts on facility from whatever source → **Alert**

Severe damage to safe shutdown equipment from missiles or explosion with plant not in cold shutdown

(EAL Ref Manual 17G)

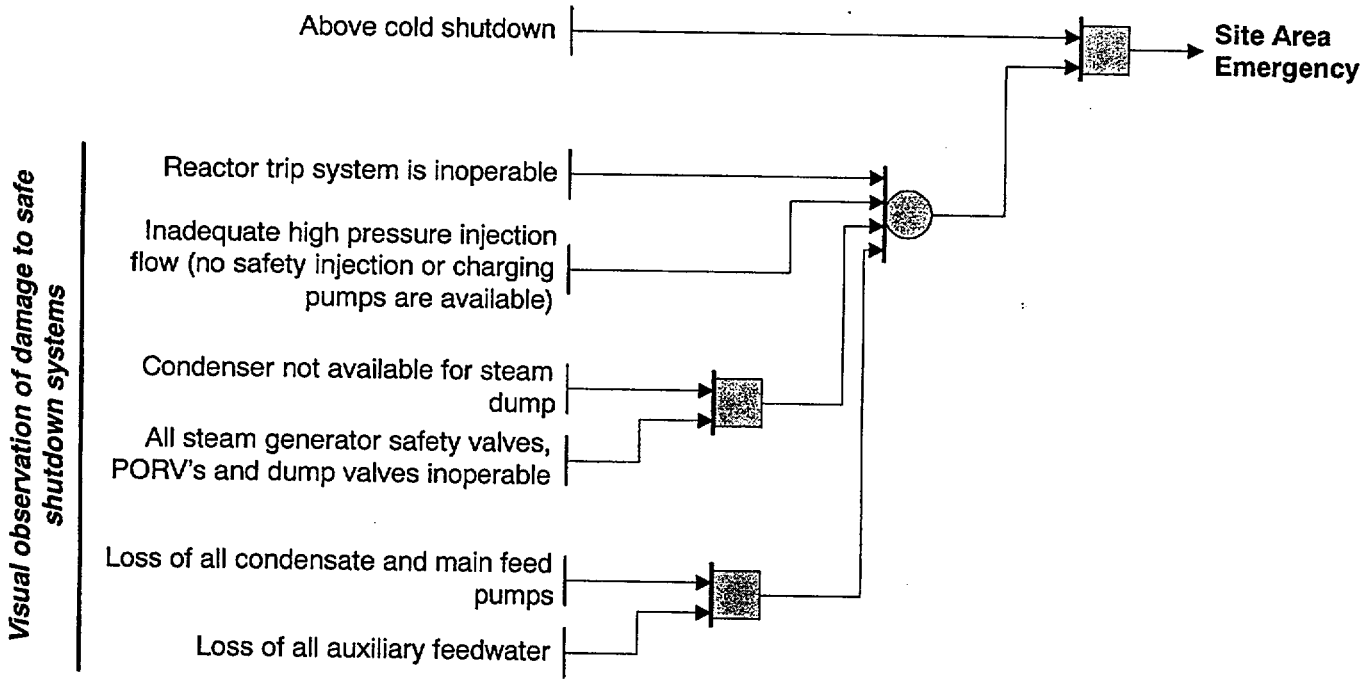

Condition 17 : Hazards to Plant Operations

Near or onsite toxic or flammable gas release

(EAL Ref Manual 17H)

Widespread toxic or flammable gaseous hazard being experienced or projected onsite (out side of plant) leading to evacuation or sheltering of personnel outside the plant

Receipt of recommendation by Local, County or State Officials to evacuate personnel from site based on an offsite hazardous or flammable gaseous release event

→ **Notification of Unusual Event**

Entry into the plant environs of toxic or flammable gases

(EAL Ref Manual 17I)

Explosive gas concentrations being measured within the plant at a distance of greater than 10 feet from the source

- > explosive limits

→ **Alert**

Toxic gaseous concentrations being measured within a large area of the plant at the breathing zone

- > 50 ppm hydrazine
- > 300 ppm ammonia
- > 50 ppm hydrochloric acid
- > 1400 ppm morpholine
- > 30 ppm ethanolamine (ETA)
- > IDLH for any toxic gas (see D14.4 AOP 1)

Note: IDLH =Immediately Dangerous to Life or Health. IDLH Reference: NIOSH Pocket Guide to Chemical Hazards, June 1994.

Condition 17 : Hazards to Plant Operations

Entry of toxic or flammable gases into vital areas with plant not in cold shutdown.

(EAL Ref Manual 17J)

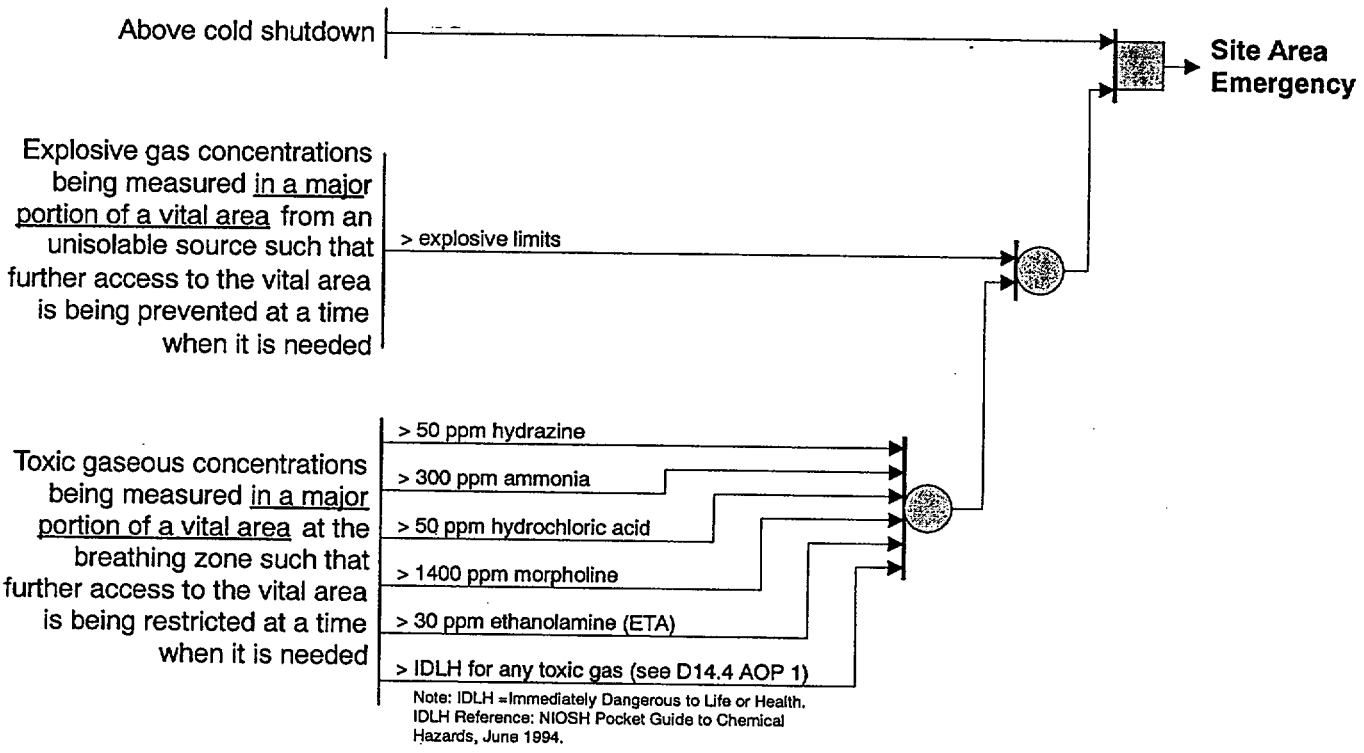

Condition 18 :ISFSI Events

ISFSI cask tip over or drop resulting in cask seal leakage

(EAL Ref Manual 18A)

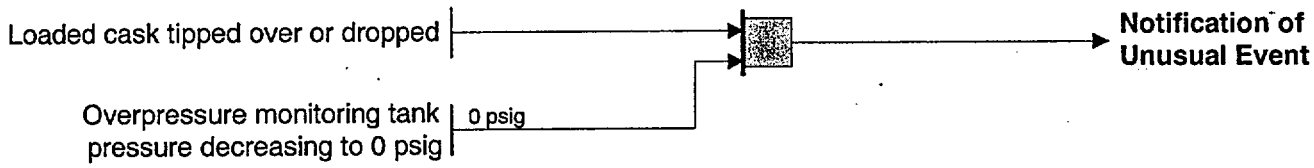

Loss of ISFSI cask/fuel containment barrier

(EAL Ref Manual 18B)

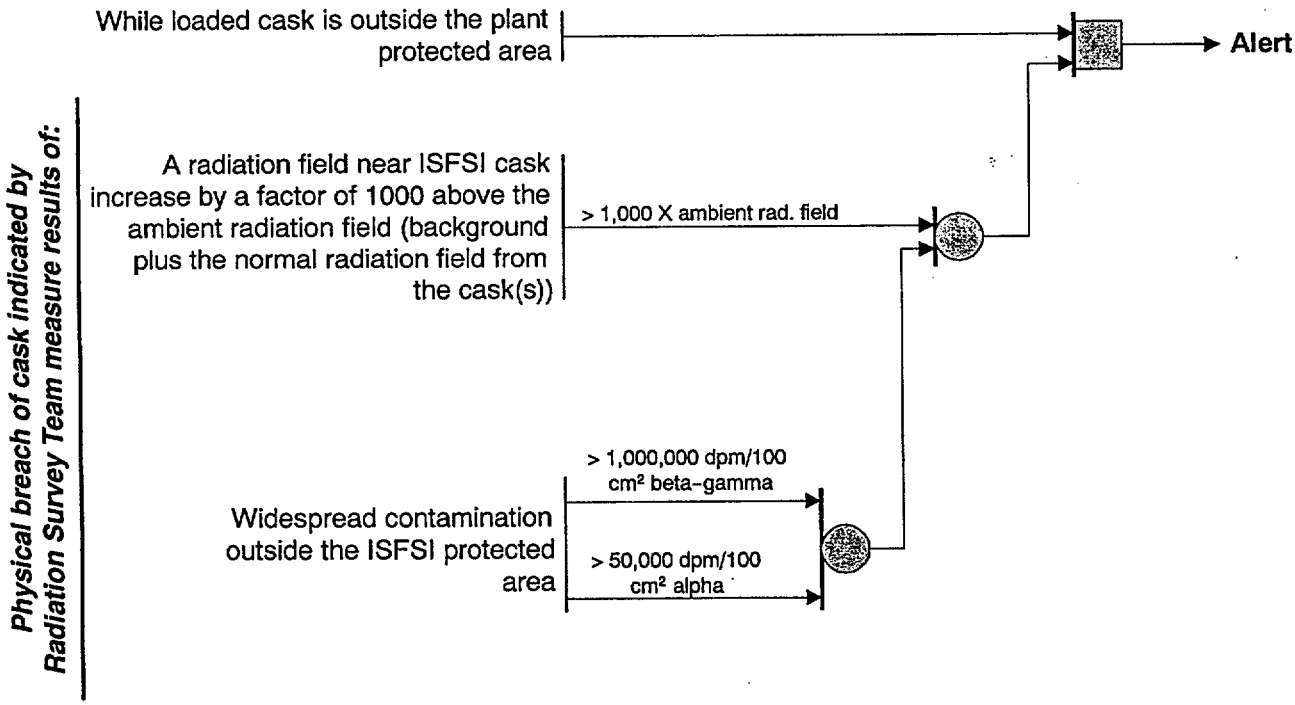

Condition 19 : Natural Events

Any confirmed earthquake (EAL Ref Manual 19A)

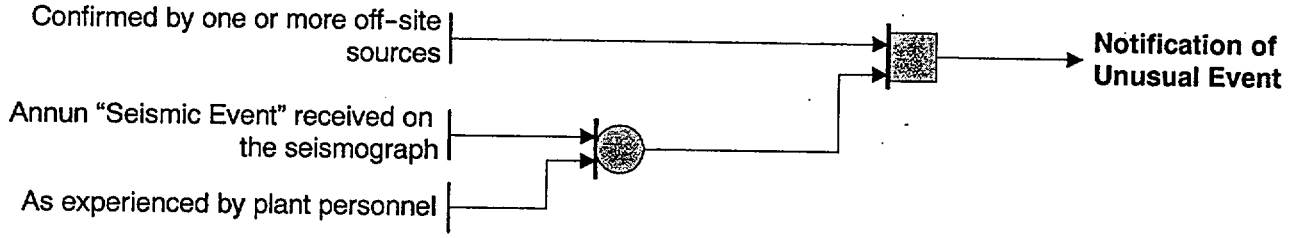

Earthquake greater than Operational Basis Earthquake (EAL Ref Manual 19B)

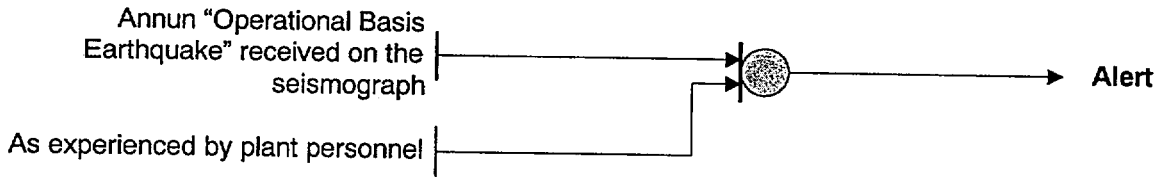

Earthquake greater than Design Basis Earthquake with plant not in cold shutdown (EAL Ref Manual 19C)

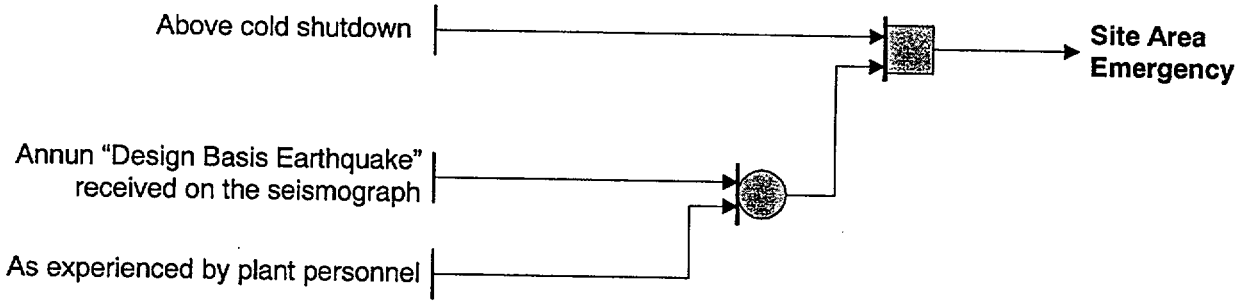

Condition 19 : Natural Events

Any tornado on site. (EAL Ref Manual 19D)

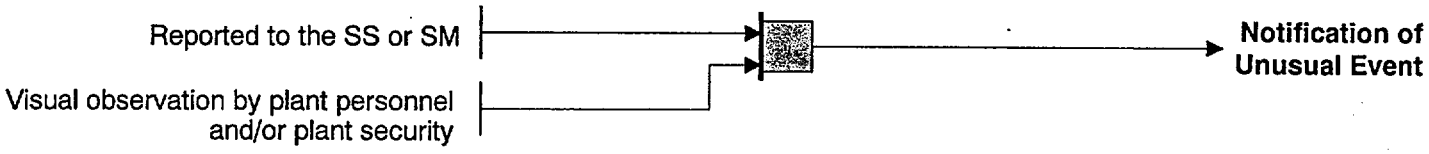

Any tornado striking the facility. (EAL Ref Manual 19E)

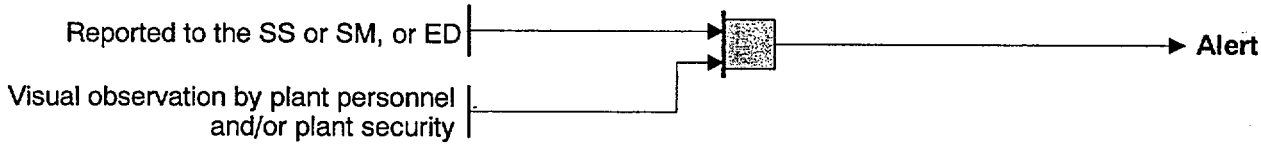

Condition 19 : Natural Events

50 Year Flood **(EAL Ref Manual 19F)**

River Intake Elevation | > 686 ft → **Notification of Unusual Event**

Flood levels approaching design levels **(EAL Ref Manual 19G)**

River Intake Elevation -Technical Specification requires both units to be shut down | > 692 ft → **Alert**

Flood levels exceeding design levels with plant not in cold shutdown **(EAL Ref Manual 19H)**

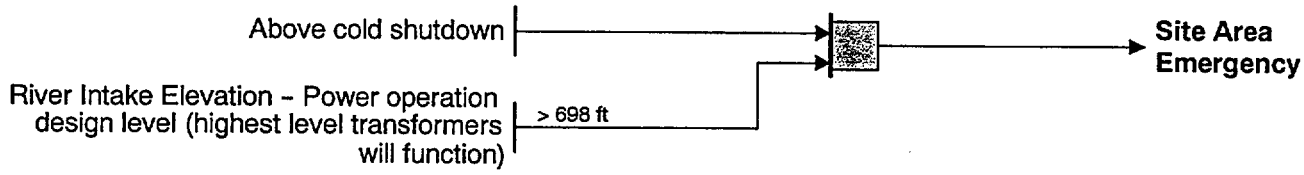

Condition 19 : Natural Events

Low water levels being experienced or projected beyond usual levels.

(EAL Ref Manual 19I)

River intake elevation (11/21 Cooling Water Pump - Low Water Level Trip) — < 672.5 ft → **Notification of Unusual Event**

Low water levels being experienced or projected to be near design levels.

(EAL Ref Manual 19J)

River intake elevation — < 669.5 ft → **Alert**

With plant not in cold shutdown, low water levels being experienced or projected to be less than design levels, or failure of vital equipment with low water level.

(EAL Ref Manual 19K)

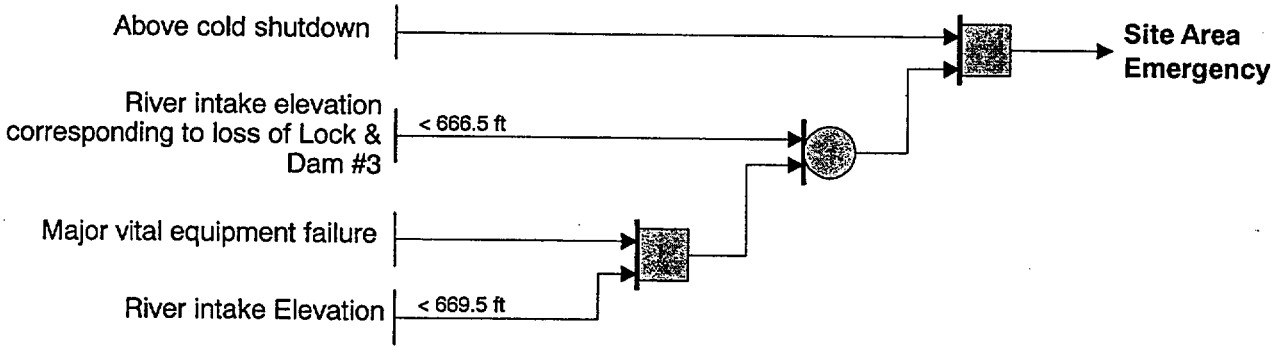

Condition 19 : Natural Events

Sustained winds being experienced or projected near design levels

(EAL Ref Manual 19L)

Sustained wind speed indicated by met tower | > 90 mph → **Alert**

Sustained winds being in excess of design levels being experienced or projected with plant not in cold shutdown

(EAL Ref Manual 19M)

Above cold shutdown →
Sustained wind speed indicated by met tower | > 100 mph → → **Site Area Emergency**

Any major internal or external events (e.g., fires, earthquake, substantially beyond design levels) which could or has caused massive damage to plant systems resulting or potential for resulting in large releases to the offsite environment in excess of the EPA Protective Action Guides

(EAL Ref Manual 19N)

As determined by the SS, SM, or ED → **General Emergency**

Condition 20 : Other

Conditions that warrant increased awareness on the part of plant operation staff or state and/or local offsite authorities

(EAL Ref Manual 20A)

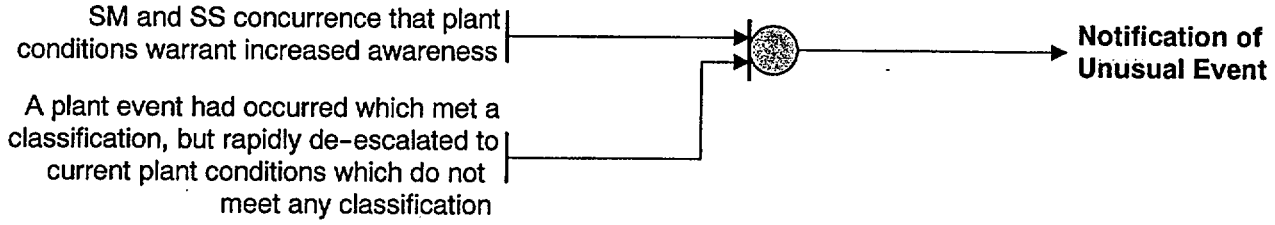

Inability to reach required shutdown within Technical Specification Limits

(EAL Ref Manual 20B)

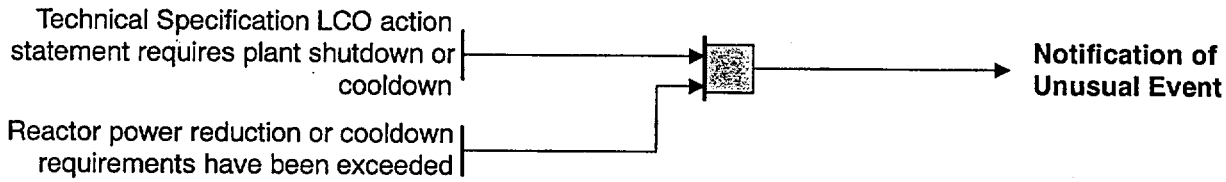

Conditions that involve other than normal controlled shutdown

(EAL Ref Manual 20C)

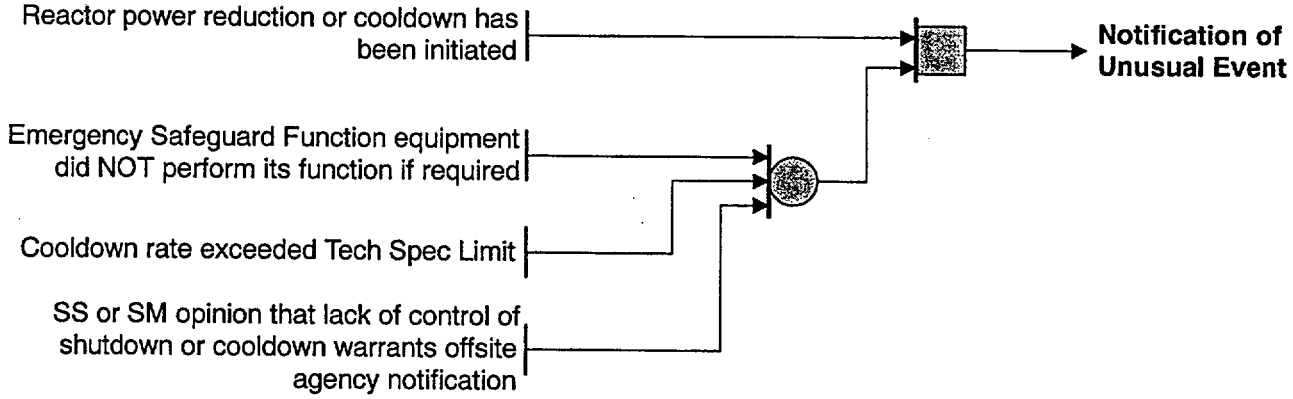

Condition 20 : Other

Conditions that warrant activation of Technical support Center and nearsite Emergency Operation Facility

(EAL Ref Manual 20D)

SS, SM, or ED opinion → **Alert**

Other plant conditions that warrant activation of emergency operation centers and monitoring teams or a precautionary notification to the public near the site

(EAL Ref Manual 20E)

SS, SM, or ED opinion → **Site Area Emergency**

Other plant conditions exist, from whatever source, that make release of large amounts of radioactivity in a short time period possible, e.g., any core melt situation

(EAL Ref Manual 20F)

SS, SM, or ED opinion → **General Emergency**

4.0 RESPONSIBILITIES

4.1 Duty Shift Manager has the responsibility to authorize the initial emergency classification.

4.2 Shift Supervisor of the unaffected unit has the responsibility to assist the Shift Manager as necessary including authorization of an emergency classification.

4.3 Shift Supervisor of the affected unit has the responsibility to direct activities related to the operation of the affected unit.

4.4 Emergency Director has the responsibility to authorize an emergency classification whenever an Alert, Site Area, or General Emergency is declared and the EOF is not activated.

4.5 If the EOF is activated and fully functional, the Emergency Manager has the responsibility to authorize an emergency classification.

4.6 Control Room Operators and affected unit Shift Supervisor have the responsibility to assist the Shift Manager or unaffected unit Shift Supervisor in the identification and verification of control board indications.

5.0 DISCUSSION

5.1 Definitions

5.1.1 Notification of Unusual Event - events that are in progress or have occurred which indicate a potential degradation of the level of safety of the plant.

No releases of radioactive material requiring offsite response or monitoring are expected unless further degradation of safety systems occurs.

5.1.2 Alert - events are in progress or have occurred which involve actual or potential substantial degradation of the level of safety of the plant. It is the lowest level of emergency classification when some necessity for emergency planning and offsite response is necessary.

Any releases expected are limited to small fractions of the EPA Protective Action Guideline exposure levels.

5.1.3 Site Area Emergency - events are in progress or have occurred which involve actual or likely major failure of plant functions needed for protection of the public.

Any releases are not expected to exceed the EPA Protective Action Guideline exposure levels except near the site boundary.

5.1.4 General Emergency - events are in progress or have occurred which involve actual or imminent substantial core degradation or melting with a potential for loss of containment integrity.

Releases during a General Emergency can be reasonably expected to exceed the EPA Protective Action Guideline exposure levels offsite for more than the immediate site area.

5.1.5 Emergency Action Levels (EAL) - specific instrument readings, surface or airborne contamination levels or radiation dose rates that designate a specific emergency class requiring emergency measures for that class.

5.2 Emergency Action Levels

Attached to this procedure is a Summary of Emergency Action Levels, Attachment 1. This summary identifies the four emergency classifications, the initiating condition(s), emergency action levels for each classification, and, where applicable, specific instruments and indications to be used to detect and classify an emergency.

The emergency action levels for each classification and the instrument readings and indications listed do not reflect a complete list of instrumentation that will show abnormal indications but does list those key parameters useful in classifying the event.

The Summary of Emergency Action Levels lists are based on the initiating conditions as required by Appendix 1 of NUREG-0654, accidents analyzed in the Prairie Island USAR, and the NRC Branch Position on Acceptable Deviations From NUREG-0654/ FEMA-REP-1, July 11, 1994.

Condition 12 : Plant Shutdown Functions

Complete loss of any function needed for plant hot shutdown. (Also see Condition #7 for possible General if feed and bleed is initiated).

(EAL Ref Manual 12H)

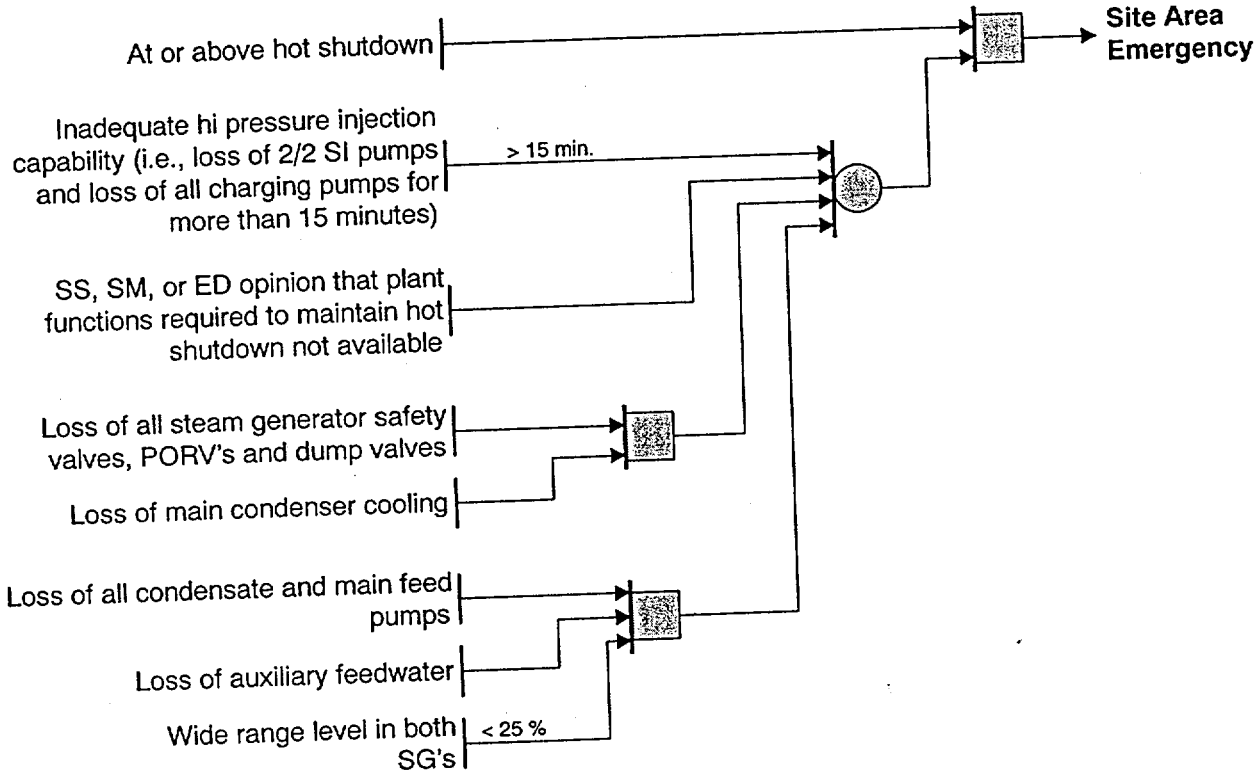

Condition 7 : Secondary Coolant Anomaly

Transient initiated by loss of feedwater and condensate systems (principal heat removal system) followed by failure of emergency feedwater system for extended period. Core melting possible in several hours. Ultimate failure of containment likely if core melts.
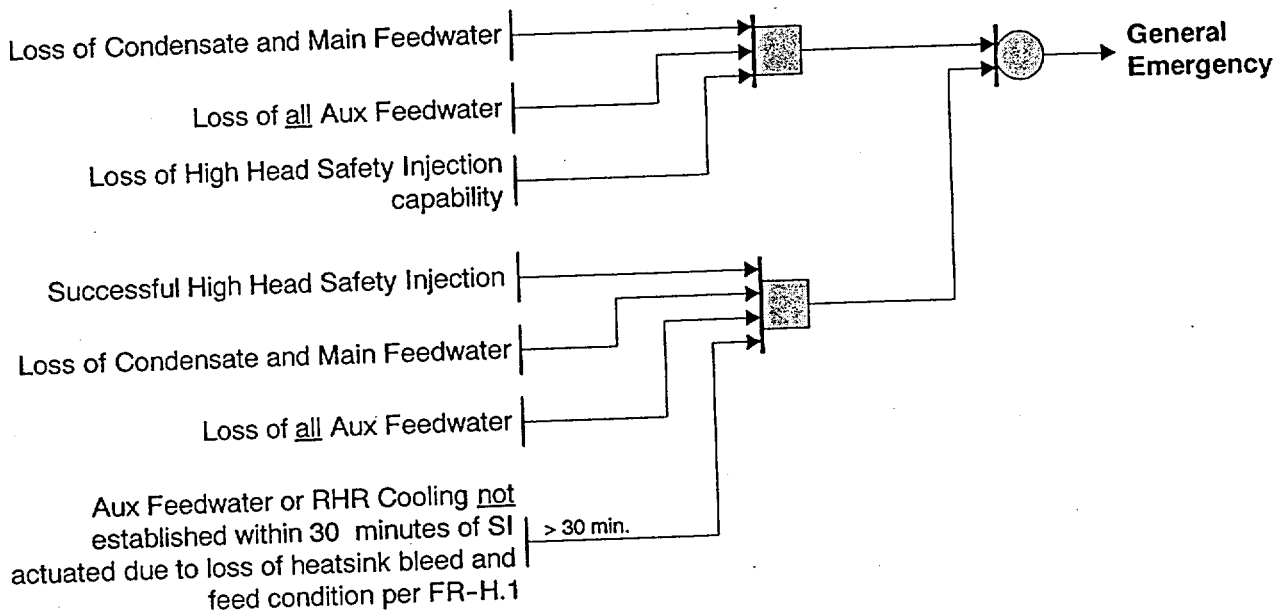
(EAL Ref Manual 7E)