72-1015

NAC INTERNATIONAL

Atlanta Corporate Headquarters
655 Engineering Drive
Norcross, Georgia 30092
770-447-1144
Fax 770-447-1797
www.nacintl.com

June 19, 2000

U.S. Nuclear Regulatory Commission
11555 Rockville Pike
Rockville, MD 20852-2738

Attn: Document Control Desk

Subject: Docket No. 72-1015

Submittal of Responses to June 11, 2000 Telecon RAIs (Structural) as Supplemental Information for the UMS® Universal Storage System Amendment for Maine Yankee Atomic Power Company Site Specific Spent Fuel (TAC No. L22979)

References:

1. Submittal of Responses to Telecon RAIs as Supplemental Information for the UMS® Universal Storage System Amendment for Maine Yankee Atomic Power Company Site Specific Spent Fuel (UMSS-00D), May 2000

2. NAC Letter, U.S. NRC Review of NAC-UMS® Universal Storage System Submittals, NAC International, June 16, 2000

NAC International (NAC) herewith submits 10 copies of Responses to June 11, 2000 Telecon RAIs (structural) as Supplemental Information to Reference 1 for the NAC-UMS® Universal Storage System Amendment for Maine Yankee Atomic Power Company site specific spent fuel. This submittal includes the telecon RAI comments and NAC's responses presented in the standard NAC RAI response format, followed by the SAR Revision UMSS-00E changed pages, including NAC license drawing 790-564, Revision 2. The List of Effective Pages and the Master Table of Contents for the SAR are updated to incorporate the text and page changes in the body of the SAR.

The VCC Shield Plug design shown on license drawing 790-564, Revision 2, is reinstated by this submittal, replacing Revision 3 of the drawing (defined an alternate configuration that included NS-3 neutron shielding material), which was submitted in SAR Revision UMSS-00C on April 18, 2000. As NAC stated in Reference 2, the alternate configuration of the VCC Shield Plug, containing NS-3 neutron shielding material, is withdrawn. NAC and Maine Yankee intend to pursue this alternate shield plug configuration via the 10 CFR 72.48 regulatory process.

The telecon RAI responses and the SAR changed pages in this submittal address the following items:

- Comparison of fracture toughness of SA-182 (forging) and SA-240 (plate) stainless steels;
- Revision of retaining ring bolt material to ASTM A-193, Grade B6, high alloy steel on Page 3.3-2;

ED20000807

NMSS01 Public

NAC INTERNATIONAL

- Incorporation of NAC-UMS® Storage System design basis ISFSI pad and foundation characteristics in Section 11.2.12 and similarly, UMS-MY design basis ISFSI pad and foundation characteristics in Section 11.2.15;

- Administrative correction in Section 9.0 to state that the VCC can be lifted by lifting lugs or by jacks and air pads and incorporation of the periodic inspection program for the transfer cask in Section 9.2;

- Revision of Section 11.2.16 to include the cladding stress component due to fuel rod internal pressure;

- Revision of SAR tables and text to clarify that a Maine Yankee Fuel Can may only be placed in a NAC-UMS® Class 1 Transportable Storage Canister.

If you have any comments or questions, please contact Jim Ballowe or me at (770) 447-1144.

Sincerely,

T. C. Thompson

Thomas C. Thompson
Director, Licensing and Competitive Assessment
Engineering & Design Services

Enclosure

cc (w/o enclosure):	P. Bemis	(SWEC)	G. Zinke	(MY)
	E. Washer	(SWEC)	P. Plante	(MY)
	M. Meisner	(MY)		

12412-SAR-002

DOCKET NO. 72-1015

UMS®

UNIVERSAL MPC SYSTEM®

SAFETY ANALYSIS REPORT

for the

UMS® UNIVERSAL STORAGE CASK

Amendment for

MAINE YANKEE ATOMIC POWER COMPANY

Site Specific Spent Fuel

June 2000 UMSS-00E

NAC INTERNATIONAL

NAC INTERNATIONAL

RESPONSE TO THE

UNITED STATES
NUCLEAR REGULATORY COMMISSION
TELECON RAIs

MAINE YANKEE AMENDMENT
NAC UNIVERSAL STORAGE SYSTEM (NAC-UMS®)

(TAC NO. L22979, DOCKET NO. 72-1015)

JUNE 2000

NAC INTERNATIONAL
TELECON REQUEST FOR ADDITIONAL INFORMATION

CHAPTER 3: STRUCTURAL EVALUATION

1 Is the fracture toughness of the alternate material SA-182 comparable to that of SA-240 for its effects on determining critical flaw sizes for the TSC closure plate?

NAC Response

The fracture toughness of the austenitic stainless steel does not change for different forms of the material. Austenitic stainless steels do not experience a ductile-to-brittle transition for the range of temperatures considered in this Safety Analysis Report. Therefore, fracture toughness is not a concern. Tables 3.3-1 and 3.3-3 were revised to reflect this determination.

NAC INTERNATIONAL
TELECON REQUEST FOR ADDITIONAL INFORMATION

CHAPTER 3: STRUCTURAL EVALUATION

2 On SAR page 3.3-2, revise the retaining ring bolts material to ASTM A193, Grade B6 high alloy steel.

NAC Response

The retaining ring bolt material shown on page 3.3-2 is revised to ASTM A193, Grade B6, high alloy steel.

NAC INTERNATIONAL
TELECON REQUEST FOR ADDITIONAL INFORMATION

CHAPTER 11: ACCIDENT ANALYSES

3 The pad and foundation parameters shown on SAR page 11.2.15-4 are those for UMS. They should be called out in SAR Subsection 11.2.12. Since both Chapter 12, B3.4.1 and B3.4.2 are revised, there are two sets of parameters to be called out in the SAR text. One for UMS and another for MY. Also, the parameters are for tip-over analysis only. The case for end drop has not been analyzed in the SAR because of the unyielding surface assumption for the 24-inch vertical drop analysis.

NAC Response

Section 11.2.15 is revised to delete the UMS Storage System design basis ISFSI pad and foundation parameters and to incorporate the Maine Yankee ISFSI pad and foundation parameters.

Section 11.2.12 is revised to incorporate the UMS Storage System design basis ISFSI pad and foundation parameters.

NAC INTERNATIONAL
TELECON REQUEST FOR ADDITIONAL INFORMATION

CHAPTER 9: ACCEPTANCE TEST & MAINTENANCE PROGRAM

4 In Section 9.2.4, add a description of the transfer cask periodic inspection program to ensure that the trunnion welds are not damaged after repeated use. Use ANSI N14.6 standards, as appropriate (This is being addressed for the UMS rulemaking).

NAC Response

Section 9.2 is revised to incorporate the periodic inspection program for the trunnion welds. The inspection requirement references ANSI N14.6. The weld examinations are performed in accordance with Section V of the ASME Code. Acceptance criteria are in accordance with Section III, Subsection NF, Articles NF-5340 or 5350, as appropriate.

NAC INTERNATIONAL
TELECON REQUEST FOR ADDITIONAL INFORMATION

CHAPTER 11: ACCIDENT ANALYSES

5 In Subsection 11.2.16, for the damaged fuel assembly with missing grid spacers, the side impact stress evaluation should consider the cladding stress components due to rod internal pressure, similar to that addressed in LLNL Report 21246, in which the failure criteria may not have to be based on the maximum shear theory.

NAC Response

Section 11.2.16 is revised to include the cladding stress component due to rod internal pressure. The revised margin of safety is +0.53 and +0.44 for ultimate and yield strength, respectively.

NAC INTERNATIONAL
TELECON REQUEST FOR ADDITIONAL INFORMATION

CHAPTER 1: GENERAL DESCRIPTION

6 Revise the SAR as appropriate to clearly specify that a Maine Yankee Fuel Can may only be placed in a NAC-UMS Class 1 canister.

NAC Response

Tables 1-1, 2.1.3.1-1, 12B2-6 and 12B2-7, and Section 2.1.3.1.5 are revised to include the specification that a Maine Yankee Fuel Can may only be placed in a NAC-UMS Class 1 Transportable Storage Canister.

List of Effective Pages

Master Table of Contents

i ..... Revision UMSS-99E
ii ..... Revision UMSS-99E
iii ..... Revision UMSS-99E
iv ..... Revision UMSS-00D
v ..... Revision UMSS-00C
vi ..... Revision UMSS-99E
vii ..... Revision UMSS-99E
viii ..... Revision UMSS-99E
ix ..... Revision UMSS-00B
x ..... Revision UMSS-00A
xi ..... Revision UMSS-00E
xii ..... Revision UMSS-99E
xiii ..... Revision UMSS-99E
xiv ..... Revision UMSS-99E
xv ..... Revision UMSS-00D
xvi ..... Revision UMSS-99E

Chapter 1

1-i ..... Revision UMSS-99D
1-ii ..... Revision 1
1-1 ..... Revision 1
1-2 ..... Revision 1
1-3 ..... Revision UMSS-00B
1-4 ..... Revision UMSS-00D
1-5 ..... Revision UMSS-00E
1-6 ..... Revision UMSS-00B
1-7 ..... Revision UMSS-00B
1-8 ..... Revision UMSS-00B
1.1-1 ..... Revision UMSS-99D
1.1-2 ..... Revision UMSS-99D
1.1-3 ..... Revision 1
1.1-4 ..... Revision 1
1.2-1 ..... Revision 1
1.2-2 ..... Revision 1
1.2-3 ..... Revision 1
1.2-4 ..... Revision 1
1.2-5 ..... Revision UMSS-00D
1.2-6 ..... Revision UMSS-00D
1.2-7 ..... Revision 1
1.2-8 ..... Revision 1
1.2-9 ..... Revision 1
1.2-10 ..... Revision 1
1.2-11 ..... Revision 1
1.2-12 ..... Revision 1
1.2-13 ..... Revision 1
1.2-14 ..... Revision 1
1.2-15 ..... Revision 1
1.2-16 ..... Revision 1
1.2-17 ..... Revision 1
1.2-18 ..... Revision 1
1.2-19 ..... Revision 1
1.2-20 ..... Revision 1
1.2-21 ..... Revision 1
1.2-22 ..... Revision 1
1.2-23 ..... Revision 1
1.2-24 ..... Revision 1
1.2-25 ..... Revision 1
1.2-26 ..... Revision 1
1.2-27 ..... Revision 1
1.3-1 ..... Revision UMSS-99D
1.3-2 ..... Revision UMSS-99D
1.3-3 ..... Revision UMSS-00B
1.4-1 ..... Revision 1
1.4-2 ..... Revision 1
1.5-1 ..... Revision 1
1.5-2 ..... Revision 1
1.5-3 ..... Revision 1

List of Effective Pages (continued)

1.5-4 ..... Revision 1
1.5-5 ..... Revision 1
1.5-6 ..... Revision 1
1.5-7 ..... Revision 1
1.5-8 ..... Revision 1
1.5-9 ..... Revision 1
1.5-10 ..... Revision 1
1.5-11 ..... Revision 1
1.5-12 ..... Revision 1
1.5-13 ..... Revision 1
1.5-14 ..... Revision 1
1.5-15 ..... Revision 1
1.5-16 ..... Revision 1
1.5-17 ..... Revision 1
1.5-18 ..... Revision 1
1.5-19 ..... Revision 1
1.5-20 ..... Revision 1
1.5-21 ..... Revision 1
1.5-22 ..... Revision 1
1.5-23 ..... Revision 1
1.5-24 ..... Revision 1
1.5-25 ..... Revision 1
1.5-26 ..... Revision 1
1.5-27 ..... Revision 1
1.5-28 ..... Revision 1
1.5-29 ..... Revision 1
1.5-30 ..... Revision 1
1.5-31 ..... Revision 1
1.5-32 ..... Revision 1
1.5-33 ..... Revision 1
1.5-34 ..... Revision 1
1.5-35 ..... Revision 1
1.5-36 ..... Revision 1
1.5-37 ..... Revision 1
1.5-38 ..... Revision 1
1.5-39 ..... Revision 1
1.5-40 ..... Revision 1
1.5-41 ..... Revision 1
1.5-42 ..... Revision 1
1.5-43 ..... Revision 1
1.5-44 ..... Revision 1
1.5-45 ..... Revision 1
1.5-46 ..... Revision 1
1.5-47 ..... Revision 1
1.5-48 ..... Revision 1
1.5-49 ..... Revision 1
1.5-50 ..... Revision 1
1.5-51 ..... Revision 1
1.5-52 ..... Revision 1
1.5-53 ..... Revision 1
1.5-54 ..... Revision 1
1.6-1 ..... Revision 1
1.6-2 ..... Revision 1
1.7-1 ..... Revision 1
1.7-2 ..... Revision 1
1.7-3 ..... Revision 1
1.8-1 ..... Revision UMSS-00E
1.8-2 ..... Revision UMSS-00D

28 drawings (see Section 1.8)

Chapter 2

2-i ..... Revision UMSS-99D
2-ii ..... Revision 1
2-iii ..... Revision UMSS-00B
2-iv ..... Revision UMSS-00B
2-1 ..... Revision 1
2-2 ..... Revision 1
2-3 ..... Revision 1
2.1-1 ..... Revision UMSS-99D

List of Effective Pages (continued)

2.1.1-1 ..... Revision UMSS-99D
2.1.1-2 ..... Revision 1
2.1.1-3 ..... Revision 1
2.1.1-4 ..... Revision 1
2.1.2-1 ..... Revision 1
2.1.2-2 ..... Revision 1
2.1.2-3 ..... Revision 1
2.1.2-4 ..... Revision 1
2.1.3-1 ..... Revision UMSS-00A
2.1.3-2 ..... Revision UMSS-00A
2.1.3-3 ..... Revision UMSS-00A
2.1.3-4 ..... Revision UMSS-00E
2.1.3-5 ..... Revision UMSS-00D
2.1.3-6 ..... Revision UMSS-00C
2.1.3-7 ..... Revision UMSS-00D
2.1.3-8 ..... Revision UMSS-00B
2.1.3-9 ..... Revision UMSS-00E
2.1.3-10 ..... Revision UMSS-00B
2.1.3-11 ..... Revision UMSS-00B
2.2-1 ..... Revision UMSS-99D
2.2-2 ..... Revision 1
2.2-3 ..... Revision 1
2.2-4 ..... Revision 1
2.2-5 ..... Revision 1
2.2-6 ..... Revision 1
2.2-7 ..... Revision 1
2.2-8 ..... Revision 1
2.2-9 ..... Revision 1
2.2-10 ..... Revision 1
2.2-11 ..... Revision 1
2.3-1 ..... Revision 1
2.3-2 ..... Revision 1
2.3-3 ..... Revision 1
2.3-4 ..... Revision 1
2.3-5 ..... Revision UMSS-99D
2.3-6 ..... Revision 1
2.3-7 ..... Revision 1
2.3-8 ..... Revision 1
2.3-9 ..... Revision 1
2.3-10 ..... Revision 1
2.3-11 ..... Revision 1
2.3-12 ..... Revision UMSS-00C
2.3-13 ..... Revision UMSS-00C
2.3-14 ..... Revision UMSS-00C
2.3-15 ..... Revision UMSS-00C
2.3-16 ..... Revision UMSS-00C
2.4-1 ..... Revision 1
2.4-2 ..... Revision 1
2.4-3 ..... Revision 1
2.4-4 ..... Revision 1
2.5-1 ..... Revision 1
2.5-2 ..... Revision UMSS-00C

Chapter 3

3-i ..... Revision UMSS-00D
3-ii ..... Revision UMSS-99D
3-iii ..... Revision 1
3-iv ..... Revision 1
3-v ..... Revision UMSS-00D
3-vi ..... Revision 1
3.1-1 ..... Revision 1
3.1-2 ..... Revision 1
3.1-3 ..... Revision UMSS-00C
3.1-4 ..... Revision UMSS-00C
3.1-5 ..... Revision UMSS-00C
3.1-6 ..... Revision 1
3.1-7 ..... Revision 1
3.2-1 ..... Revision 1
3.2-2 ..... Revision UMSS-99D
3.2-3 ..... Revision UMSS-99D

List of Effective Pages (continued)

3.3-1 ..... Revision UMSS-00E
3.3-2 ..... Revision UMSS-00E
3.3-3 ..... Revision UMSS-00E
3.3-4 ..... Revision UMSS-00C
3.3-5 ..... Revision UMSS-00E
3.3-6 ..... Revision UMSS-00C
3.3-7 ..... Revision UMSS-00C
3.3-8 ..... Revision UMSS-00C
3.3-9 ..... Revision UMSS-00C
3.3-10 ..... Revision UMSS-00C
3.3-11 ..... Revision UMSS-00C
3.3-12 ..... Revision UMSS-00C
3.3-13 ..... Revision UMSS-00C
3.3-14 ..... Revision UMSS-00C
3.4.1-1 ..... Revision 1
3.4.1-2 ..... Revision 1
3.4.1-3 ..... Revision 1
3.4.1-4 ..... Revision 1
3.4.1-5 ..... Revision UMSS-99E
3.4.1-6 ..... Revision UMSS-99E
3.4.1-7 ..... Revision 1
3.4.1-8 ..... Revision 1
3.4.1-9 ..... Revision 1
3.4.1-10 ..... Revision 1
3.4.2-1 ..... Revision 1
3.4.2-2 ..... Revision 1
3.4.3-1 ..... Revision 1
3.4.3-2 ..... Revision 1
3.4.3-3 ..... Revision 1
3.4.3-4 ..... Revision 1
3.4.3-5 ..... Revision 1
3.4.3-6 ..... Revision 1
3.4.3-7 ..... Revision 1
3.4.3-8 ..... Revision 1
3.4.3-9 ..... Revision 1
3.4.3-10 ..... Revision 1
3.4.3-11 ..... Revision 1
3.4.3-12 ..... Revision 1
3.4.3-13 ..... Revision 1
3.4.3-14 ..... Revision 1
3.4.3-15 ..... Revision 1
3.4.3-16 ..... Revision 1
3.4.3-17 ..... Revision 1
3.4.3-18 ..... Revision 1
3.4.3-19 ..... Revision 1
3.4.3-20 ..... Revision 1
3.4.3-21 ..... Revision 1
3.4.3-22 ..... Revision 1
3.4.3-23 ..... Revision 1
3.4.3-24 ..... Revision 1
3.4.3-25 ..... Revision 1
3.4.3-26 ..... Revision 1
3.4.3-27 ..... Revision 1
3.4.3-28 ..... Revision 1
3.4.3-29 ..... Revision 1
3.4.3-30 ..... Revision 1
3.4.3-31 ..... Revision 1
3.4.3-32 ..... Revision 1
3.4.3-33 ..... Revision 1
3.4.3-34 ..... Revision 1
3.4.3-35 ..... Revision 1
3.4.3-36 ..... Revision 1
3.4.3-37 ..... Revision 1
3.4.3-38 ..... Revision 1
3.4.3-39 ..... Revision 1
3.4.3-40 ..... Revision 1
3.4.3-41 ..... Revision 1
3.4.3-42 ..... Revision 1
3.4.3-43 ..... Revision 1
3.4.3-44 ..... Revision 1

List of Effective Pages (continued)

3.4.3-45 ..... Revision 1
3.4.3-46 ..... Revision 1
3.4.3-47 ..... Revision 1
3.4.3-48 ..... Revision 1
3.4.3-49 ..... Revision 1
3.4.3-50 ..... Revision 1
3.4.3-51 ..... Revision 1
3.4.3-52 ..... Revision 1
3.4.3-53 ..... Revision 1
3.4.3-54 ..... Revision 1
3.4.3-55 ..... Revision 1
3.4.4-1 ..... Revision 1
3.4.4-2 ..... Revision 1
3.4.4-3 ..... Revision 1
3.4.4-4 ..... Revision 1
3.4.4-5 ..... Revision 1
3.4.4-6 ..... Revision 1
3.4.4-7 ..... Revision 1
3.4.4-8 ..... Revision 1
3.4.4-9 ..... Revision 1
3.4.4-10 ..... Revision 1
3.4.4-11 ..... Revision 1
3.4.4-12 ..... Revision 1
3.4.4-13 ..... Revision 1
3.4.4-14 ..... Revision 1
3.4.4-15 ..... Revision 1
3.4.4-16 ..... Revision 1
3.4.4-17 ..... Revision 1
3.4.4-18 ..... Revision 1
3.4.4-19 ..... Revision 1
3.4.4-20 ..... Revision 1
3.4.4-21 ..... Revision 1
3.4.4-22 ..... Revision 1
3.4.4-23 ..... Revision 1
3.4.4-24 ..... Revision 1
3.4.4-25 ..... Revision 1
3.4.4-26 ..... Revision 1
3.4.4-27 ..... Revision 1
3.4.4-28 ..... Revision 1
3.4.4-29 ..... Revision 1
3.4.4-30 ..... Revision 1
3.4.4-31 ..... Revision 1
3.4.4-32 ..... Revision 1
3.4.4-33 ..... Revision 1
3.4.4-34 ..... Revision 1
3.4.4-35 ..... Revision 1
3.4.4-36 ..... Revision 1
3.4.4-37 ..... Revision 1
3.4.4-38 ..... Revision 1
3.4.4-39 ..... Revision 1
3.4.4-40 ..... Revision 1
3.4.4-41 ..... Revision 1
3.4.4-42 ..... Revision 1
3.4.4-43 ..... Revision 1
3.4.4-44 ..... Revision 1
3.4.4-45 ..... Revision 1
3.4.4-46 ..... Revision 1
3.4.4-47 ..... Revision 1
3.4.4-48 ..... Revision 1
3.4.4-49 ..... Revision 1
3.4.4-50 ..... Revision 1
3.4.4-51 ..... Revision 1
3.4.4-52 ..... Revision 1
3.4.4-53 ..... Revision 1
3.4.4-54 ..... Revision 1
3.4.4-55 ..... Revision 1
3.4.4-56 ..... Revision 1
3.4.4-57 ..... Revision 1
3.4.4-58 ..... Revision 1
3.4.4-59 ..... Revision 1

List of Effective Pages (continued)

3.4.4-60 ..... Revision 1
3.4.4-61 ..... Revision 1
3.4.4-62 ..... Revision 1
3.4.4-63 ..... Revision 1
3.4.4-64 ..... Revision 1
3.4.4-65 ..... Revision 1
3.4.4-66 ..... Revision 1
3.4.4-67 ..... Revision 1
3.4.4-68 ..... Revision 1
3.4.4-69 ..... Revision 1
3.4.4-70 ..... Revision 1
3.4.4-71 ..... Revision 1
3.4.4-72 ..... Revision 1
3.4.4-73 ..... Revision 1
3.4.4-74 ..... Revision 1
3.4.4-75 ..... Revision 1
3.4.4-76 ..... Revision 1
3.4.4-77 ..... Revision 1
3.4.5-1 ..... Revision UMSS-00A
3.5-1 ..... Revision 1
3.6-1 ..... Revision UMSS-99D
3.6-2 ..... Revision UMSS-99D
3.6-3 ..... Revision UMSS-00B
3.6-4 ..... Revision UMSS-00B
3.6-5 ..... Revision UMSS-00A
3.6-6 ..... Revision UMSS-00A
3.6-7 ..... Revision UMSS-00A
3.6-8 ..... Revision UMSS-00A
3.7-1 ..... Revision 1
3.7-2 ..... Revision 1
3.7-3 ..... Revision 1
3.8-1 ..... Revision 1
3.8-2 ..... Revision 1
3.8-3 ..... Revision 1
3.8-4 ..... Revision 1
3.8-5 ..... Revision 1
3.8-6 ..... Revision 1
3.8-7 ..... Revision 1
3.8-8 ..... Revision 1
3.8-9 ..... Revision 1
3.8-10 ..... Revision 1
3.8-11 ..... Revision 1

Chapter 4

4-i ..... Revision UMSS-00C
4-ii ..... Revision UMSS-99D
4-iii ..... Revision UMSS-99D
4-iv ..... Revision UMSS-00C
4-v ..... Revision UMSS-99D
4-vi ..... Revision UMSS-00C
4-vii ..... Revision UMSS-99D
4.1-1 ..... Revision 1
4.1-2 ..... Revision 1
4.1-3 ..... Revision 1
4.1-4 ..... Revision 1
4.1-5 ..... Revision 1
4.1-6 ..... Revision UMSS-00A
4.1-7 ..... Revision 1
4.1-8 ..... Revision 1
4.2-1 ..... Revision 1
4.2-2 ..... Revision 1
4.2-3 ..... Revision UMSS-00A
4.2-4 ..... Revision 1
4.2-5 ..... Revision 1
4.2-6 ..... Revision 1
4.2-7 ..... Revision 1
4.3-1 ..... Revision 1
4.4-1 ..... Revision 1
4.4.1-1 ..... Revision 1
4.4.1-2 ..... Revision 1

List of Effective Pages (continued)

4.4.1-3 ..... Revision 1
4.4.1-4 ..... Revision 1
4.4.1-5 ..... Revision 1
4.4.1-6 ..... Revision 1
4.4.1-7 ..... Revision 1
4.4.1-8 ..... Revision 1
4.4.1-9 ..... Revision 1
4.4.1-10 ..... Revision 1
4.4.1-11 ..... Revision 1
4.4.1-12 ..... Revision 1
4.4.1-13 ..... Revision 1
4.4.1-14 ..... Revision 1
4.4.1-15 ..... Revision 1
4.4.1-16 ..... Revision 1
4.4.1-17 ..... Revision 1
4.4.1-18 ..... Revision 1
4.4.1-19 ..... Revision 1
4.4.1-20 ..... Revision 1
4.4.1-21 ..... Revision 1
4.4.1-22 ..... Revision 1
4.4.1-23 ..... Revision 1
4.4.1-24 ..... Revision 1
4.4.1-25 ..... Revision 1
4.4.1-26 ..... Revision 1
4.4.1-27 ..... Revision 1
4.4.1-28 ..... Revision 1
4.4.1-29 ..... Revision 1
4.4.1-30 ..... Revision 1
4.4.1-31 ..... Revision 1
4.4.1-32 ..... Revision 1
4.4.1-33 ..... Revision 1
4.4.1-34 ..... Revision 1
4.4.1-35 ..... Revision 1
4.4.1-36 ..... Revision 1
4.4.1-37 ..... Revision 1
4.4.1-38 ..... Revision 1
4.4.1-39 ..... Revision 1
4.4.1-40 ..... Revision 1
4.4.1-41 ..... Revision 1
4.4.1-42 ..... Revision 1
4.4.1-43 ..... Revision 1
4.4.1-44 ..... Revision 1
4.4.1-45 ..... Revision 1
4.4.1-46 ..... Revision 1
4.4.1-47 ..... Revision 1
4.4.1-48 ..... Revision 1
4.4.1-49 ..... Revision 1
4.4.1-50 ..... Revision 1
4.4.1-51 ..... Revision 1
4.4.2-1 ..... Revision 1
4.4.3-1 ..... Revision UMSS-00C
4.4.3-2 ..... Revision UMSS-00D
4.4.3-3 ..... Revision UMSS-00C
4.4.3-4 ..... Revision UMSS-00C
4.4.3-5 ..... Revision UMSS-00C
4.4.3-6 ..... Revision UMSS-00C
4.4.3-7 ..... Revision UMSS-00C
4.4.3-8 ..... Revision UMSS-00C
4.4.3-9 ..... Revision UMSS-00C
4.4.3-10 ..... Revision UMSS-00C
4.4.3-11 ..... Revision UMSS-00C
4.4.3-12 ..... Revision UMSS-00C
4.4.4-1 ..... Revision 1
4.4.5-1 ..... Revision 1
4.4.5-2 ..... Revision 1
4.4.5-3 ..... Revision 1
4.4.5-4 ..... Revision 1
4.4.5-5 ..... Revision 1
4.4.5-6 ..... Revision 1
4.4.6-1 ..... Revision 1

List of Effective Pages (continued)

4.4.7-1 ..... Revision 1
4.4.7-2 ..... Revision 1
4.4.7-3 ..... Revision 1
4.4.7-4 ..... Revision 1
4.4.7-5 ..... Revision 1
4.4.7-6 ..... Revision 1
4.4.7-7 ..... Revision 1
4.4.7-8 ..... Revision 1
4.4.7-9 ..... Revision 1
4.4.7-10 ..... Revision 1
4.4.7-11 ..... Revision 1
4.4.8-1 ..... Revision 1
4.5-1 ..... Revision UMSS-00C
4.5-2 ..... Revision UMSS-00C
4.5-3 ..... Revision UMSS-99D
4.5-4 ..... Revision UMSS-99D
4.5-5 ..... Revision UMSS-00C
4.5-6 ..... Revision UMSS-00C
4.5-7 ..... Revision UMSS-99D
4.5-8 ..... Revision UMSS-00C
4.5-9 ..... Revision UMSS-00C
4.5-10 ..... Revision UMSS-00C
4.5-11 ..... Revision UMSS-99D
4.5-12 ..... Revision UMSS-99D
4.5-13 ..... Revision UMSS-99D
4.5-14 ..... Revision UMSS-00A
4.5-15 ..... Revision UMSS-00D
4.5-16 ..... Revision UMSS-00D
4.5-17 ..... Revision UMSS-00B
4.5-18 ..... Revision UMSS-00B
4.5-19 ..... Revision UMSS-00B
4.5-20 ..... Revision UMSS-99D
4.5-21 ..... Revision UMSS-00A
4.5-22 ..... Revision UMSS-99D
4.5-23 ..... Revision UMSS-00C
4.6-1 ..... Revision 1
4.6-2 ..... Revision 1
4.6-3 ..... Revision 1
4.6-4 ..... Revision UMSS-00A

Chapter 5

5-i ..... Revision 1
5-ii ..... Revision UMSS-99D
5-iii ..... Revision 1
5-iv ..... Revision 1
5-v ..... Revision UMSS-99D
5-vi ..... Revision 1
5-vii ..... Revision UMSS-99D
5-viii ..... Revision UMSS-99D
5.1-1 ..... Revision 1
5.1-2 ..... Revision 1
5.1-3 ..... Revision UMSS-99D
5.1-4 ..... Revision UMSS-99D
5.1-5 ..... Revision 1
5.1-6 ..... Revision 1
5.1-7 ..... Revision 1
5.1-8 ..... Revision 1
5.1-9 ..... Revision 1
5.1-10 ..... Revision 1
5.1-11 ..... Revision 1
5.2-1 ..... Revision 1
5.2-2 ..... Revision 1
5.2-3 ..... Revision 1
5.2-4 ..... Revision 1
5.2-5 ..... Revision 1
5.2-6 ..... Revision 1
5.2-7 ..... Revision 1
5.2-8 ..... Revision 1
5.2-9 ..... Revision 1
5.2-10 ..... Revision 1

List of Effective Pages (continued)

5.2-11 ..... Revision 1
5.2-12 ..... Revision 1
5.2-13 ..... Revision 1
5.2-14 ..... Revision 1
5.2-15 ..... Revision 1
5.2-16 ..... Revision 1
5.2-17 ..... Revision 1
5.2-18 ..... Revision 1
5.2-19 ..... Revision 1
5.2-20 ..... Revision 1
5.2-21 ..... Revision 1
5.2-22 ..... Revision 1
5.2-23 ..... Revision 1
5.2-24 ..... Revision 1
5.2-25 ..... Revision 1
5.2-26 ..... Revision 1
5.2-27 ..... Revision 1
5.2-28 ..... Revision 1
5.2-29 ..... Revision 1
5.2-30 ..... Revision 1
5.2-31 ..... Revision 1
5.3-1 ..... Revision 1
5.3-2 ..... Revision 1
5.3-3 ..... Revision 1
5.3-4 ..... Revision 1
5.3-5 ..... Revision 1
5.3-6 ..... Revision 1
5.3-7 ..... Revision 1
5.3-8 ..... Revision 1
5.3-9 ..... Revision 1
5.3-10 ..... Revision 1
5.3-11 ..... Revision 1
5.3-12 ..... Revision 1
5.3-13 ..... Revision 1
5.3-14 ..... Revision 1
5.3-15 ..... Revision 1
5.3-16 ..... Revision 1
5.3-17 ..... Revision 1
5.3-18 ..... Revision 1
5.3-19 ..... Revision 1
5.3-20 ..... Revision 1
5.3-21 ..... Revision 1
5.3-22 ..... Revision 1
5.3-23 ..... Revision 1
5.4-1 ..... Revision 1
5.4-2 ..... Revision 1
5.4-3 ..... Revision 1
5.4-4 ..... Revision 1
5.4-5 ..... Revision 1
5.4-6 ..... Revision 1
5.4-7 ..... Revision 1
5.4-8 ..... Revision 1
5.4-9 ..... Revision 1
5.4-10 ..... Revision 1
5.4-11 ..... Revision 1
5.4-12 ..... Revision 1
5.4-13 ..... Revision 1
5.4-14 ..... Revision 1
5.4-15 ..... Revision 1
5.4-16 ..... Revision 1
5.4-17 ..... Revision 1
5.4-18 ..... Revision 1
5.4-19 ..... Revision 1
5.4-20 ..... Revision 1
5.4-21 ..... Revision 1
5.4-22 ..... Revision 1
5.4-23 ..... Revision 1
5.4-24 ..... Revision 1
5.5-1 ..... Revision 1
5.5-2 ..... Revision 1

List of Effective Pages (continued)

5.5-3 ..... Revision 1
5.5-4 ..... Revision 1
5.5-5 ..... Revision 1
5.5-6 ..... Revision 1
5.5-7 ..... Revision 1
5.5-8 ..... Revision 1
5.5-9 ..... Revision 1
5.5-10 ..... Revision 1
5.6-1 ..... Revision UMSS-99D
5.6.1-1 ..... Revision UMSS-00A
5.6.1-2 ..... Revision UMSS-99D
5.6.1-3 ..... Revision UMSS-99D
5.6.1-4 ..... Revision UMSS-99D
5.6.1-5 ..... Revision UMSS-99D
5.6.1-6 ..... Revision UMSS-00A
5.6.1-7 ..... Revision UMSS-99D
5.6.1-8 ..... Revision UMSS-99D
5.6.1-9 ..... Revision UMSS-99D
5.6.1-10 ..... Revision UMSS-99D
5.6.1-11 ..... Revision UMSS-99D
5.6.1-12 ..... Revision UMSS-00B
5.6.1-13 ..... Revision UMSS-99D
5.6.1-14 ..... Revision UMSS-99D
5.6.1-15 ..... Revision UMSS-99D
5.6.1-16 ..... Revision UMSS-99D
5.6.1-17 ..... Revision UMSS-99D
5.6.1-18 ..... Revision UMSS-99D
5.6.1-19 ..... Revision UMSS-99D
5.6.1-20 ..... Revision UMSS-99D
5.6.1-21 ..... Revision UMSS-00C
5.6.1-22 ..... Revision UMSS-00C
5.6.1-23 ..... Revision UMSS-99D
5.6.1-24 ..... Revision UMSS-00C
5.6.1-25 ..... Revision UMSS-99D
5.6.1-26 ..... Revision UMSS-99D
5.7-1 ..... Revision 1
5.7-2 ..... Revision 1
5.7-3 ..... Revision 1

Chapter 6

6-i ..... Revision 1
6-ii ..... Revision UMSS-00B
6-iii ..... Revision UMSS-00C
6-iv ..... Revision 1
6-v ..... Revision 1
6-vi ..... Revision UMSS-00C
6.1-1 ..... Revision 1
6.1-2 ..... Revision 1
6.1-3 ..... Revision 1
6.2-1 ..... Revision 1
6.2-2 ..... Revision 1
6.2-3 ..... Revision 1
6.3-1 ..... Revision 1
6.3-2 ..... Revision 1
6.3-3 ..... Revision 1
6.3-4 ..... Revision 1
6.3-5 ..... Revision 1
6.3-6 ..... Revision 1
6.3-7 ..... Revision 1
6.3-8 ..... Revision 1
6.3-9 ..... Revision 1
6.3-10 ..... Revision 1
6.3-11 ..... Revision 1
6.3-12 ..... Revision 1
6.3-13 ..... Revision 1
6.3-14 ..... Revision 1
6.4-1 ..... Revision 1
6.4-2 ..... Revision 1
6.4-3 ..... Revision 1
6.4-4 ..... Revision 1

List of Effective Pages (continued)

6.4-5 ..... Revision 1
6.4-6 ..... Revision 1
6.4-7 ..... Revision 1
6.4-8 ..... Revision 1
6.4-9 ..... Revision 1
6.4-10 ..... Revision 1
6.4-11 ..... Revision 1
6.4-12 ..... Revision 1
6.4-13 ..... Revision 1
6.4-14 ..... Revision 1
6.4-15 ..... Revision 1
6.4-16 ..... Revision 1
6.4-17 ..... Revision 1
6.4-18 ..... Revision 1
6.4-19 ..... Revision 1
6.4-20 ..... Revision 1
6.4-21 ..... Revision 1
6.4-22 ..... Revision 1
6.4-23 ..... Revision 1
6.4-24 ..... Revision 1
6.4-25 ..... Revision 1
6.4-26 ..... Revision 1
6.4-27 ..... Revision 1
6.4-28 ..... Revision 1
6.4-29 ..... Revision 1
6.4-30 ..... Revision 1
6.4-31 ..... Revision 1
6.4-32 ..... Revision 1
6.4-33 ..... Revision 1
6.4-34 ..... Revision 1
6.5-1 ..... Revision 1
6.5-2 ..... Revision 1
6.5-3 ..... Revision 1
6.5-4 ..... Revision 1
6.5-5 ..... Revision 1
6.5-6 ..... Revision 1
6.5-7 ..... Revision 1
6.5-8 ..... Revision 1
6.5-9 ..... Revision 1
6.5-10 ..... Revision 1
6.5-11 ..... Revision 1
6.5-12 ..... Revision 1
6.5-13 ..... Revision 1
6.5-14 ..... Revision 1
6.5-15 ..... Revision 1
6.5-16 ..... Revision 1
6.5-17 ..... Revision 1
6.5-18 ..... Revision 1
6.5-19 ..... Revision 1
6.5-20 ..... Revision 1
6.5-21 ..... Revision 1
6.5-22 ..... Revision 1
6.5-23 ..... Revision 1
6.5-24 ..... Revision 1
6.5-25 ..... Revision 1
6.6-1 ..... Revision UMSS-99D
6.6.1-1 ..... Revision UMSS-00C
6.6.1-2 ..... Revision UMSS-99D
6.6.1-3 ..... Revision UMSS-00C
6.6.1-4 ..... Revision UMSS-99D
6.6.1-5 ..... Revision UMSS-00C
6.6.1-6 ..... Revision UMSS-00C
6.6.1-7 ..... Revision UMSS-00C
6.6.1-8 ..... Revision UMSS-00C
6.6.1-9 ..... Revision UMSS-00C
6.6.1-10 ..... Revision UMSS-00C
6.6.1-11 ..... Revision UMSS-00C
6.6.1-12 ..... Revision UMSS-00C
6.6.1-13 ..... Revision UMSS-00C
6.6.1-14 ..... Revision UMSS-00C

List of Effective Pages (continued)

6.6.1-15 ..... Revision UMSS-00C
6.6.1-16 ..... Revision UMSS-00C
6.6.1-17 ..... Revision UMSS-00C
6.6.1-18 ..... Revision UMSS-00C
6.6.1-19 ..... Revision UMSS-00C
6.6.1-20 ..... Revision UMSS-00C
6.6.1-21 ..... Revision UMSS-00C
6.7-1 ..... Revision 1
6.7-2 ..... Revision 1
6.8-1 ..... Revision 1
6.8-2 ..... Revision 1
6.8-3 ..... Revision 1
6.8-4 ..... Revision 1
6.8-5 ..... Revision 1
6.8-6 ..... Revision 1
6.8-7 ..... Revision 1
6.8-8 ..... Revision 1
6.8-9 ..... Revision 1
6.8-10 ..... Revision 1
6.8-11 ..... Revision 1
6.8-12 ..... Revision 1
6.8-13 ..... Revision 1
6.8-14 ..... Revision 1
6.8-15 ..... Revision 1
6.8-16 ..... Revision 1
6.8-17 ..... Revision 1
6.8-18 ..... Revision 1
6.8-19 ..... Revision 1
6.8-20 ..... Revision 1
6.8-21 ..... Revision 1
6.8-22 ..... Revision 1
6.8-23 ..... Revision 1
6.8-24 ..... Revision 1
6.8-25 ..... Revision 1
6.8-26 ..... Revision 1
6.8-27 ..... Revision 1
6.8-28 ..... Revision 1
6.8-29 ..... Revision 1
6.8-30 ..... Revision 1
6.8-31 ..... Revision 1
6.8-32 ..... Revision 1
6.8-33 ..... Revision 1
6.8-34 ..... Revision 1
6.8-35 ..... Revision 1
6.8-36 ..... Revision 1
6.8-37 ..... Revision 1
6.8-38 ..... Revision 1
6.8-39 ..... Revision 1
6.8-40 ..... Revision 1
6.8-41 ..... Revision 1
6.8-42 ..... Revision 1
6.8-43 ..... Revision 1
6.8-44 ..... Revision 1
6.8-45 ..... Revision 1
6.8-46 ..... Revision 1
6.8-47 ..... Revision 1
6.8-48 ..... Revision 1
6.8-49 ..... Revision 1
6.8-50 ..... Revision 1
6.8-51 ..... Revision 1

Chapter 7

7-i ..... Revision UMSS-99D
7-ii ..... Revision 1
7.1-1 ..... Revision 1
7.1-2 ..... Revision 1
7.1-3 ..... Revision 1
7.1-4 ..... Revision 1
7.1-5 ..... Revision 1
7.1-6 ..... Revision 1

List of Effective Pages (continued)

7.1-7 ..... Revision 1
7.1-8 ..... Revision 1
7.1-9 ..... Revision 1
7.1-10 ..... Revision 1
7.1-11 ..... Revision 1
7.2-1 ..... Revision 1
7.2-2 ..... Revision 1
7.3-1 ..... Revision 1
7.4-1 ..... Revision UMSS-00D
7.5-1 ..... Revision 1

Chapter 8

8-i ..... Revision UMSS-00A
8-ii ..... Revision UMSS-00A
8-1 ..... Revision UMSS-99D
8-2 ..... Revision UMSS-99D
8.1-1 ..... Revision UMSS-00A
8.1.1-1 ..... Revision UMSS-00A
8.1.1-2 ..... Revision UMSS-00A
8.1.1-3 ..... Revision UMSS-99D
8.1.1-4 ..... Revision UMSS-99D
8.1.1-5 ..... Revision UMSS-99D
8.1.1-6 ..... Revision UMSS-99D
8.1.1-7 ..... Revision UMSS-99D
8.1.1-8 ..... Revision UMSS-99D
8.1.2-1 ..... Revision UMSS-99D
8.1.2-2 ..... Revision UMSS-99D
8.1.3-1 ..... Revision UMSS-99D
8.1.3-2 ..... Revision UMSS-99D
8.2-1 ..... Revision UMSS-99D
8.2.2 ..... Revision 1
8.3-1 ..... Revision 1
8.3-2 ..... Revision 1
8.3-3 ..... Revision 1
8.3-4 ..... Revision 1
8.3-5 ..... Revision 1
8.4-1 ..... Revision 1

Chapter 9

9-i ..... Revision UMSS-00E
9.1-1 ..... Revision UMSS-00E
9.1-2 ..... Revision 1
9.1-3 ..... Revision 1
9.1-4 ..... Revision 1
9.1-5 ..... Revision 1
9.1-6 ..... Revision 1
9.1-7 ..... Revision 1
9.1-8 ..... Revision 1
9.1-9 ..... Revision 1
9.1-10 ..... Revision 1
9.2-1 ..... Revision UMSS-00E
9.2-2 ..... Revision UMSS-00E
9.3-1 ..... Revision 1

Chapter 10

10-i ..... Revision UMSS-99D
10-ii ..... Revision 1
10.1-1 ..... Revision 1
10.1-2 ..... Revision 1
10.2-1 ..... Revision 1
10.2-2 ..... Revision 1
10.3-1 ..... Revision 1
10.3-2 ..... Revision UMSS-00C
10.3-3 ..... Revision UMSS-00C
10.3-4 ..... Revision 1
10.3-5 ..... Revision 1
10.3-6 ..... Revision 1
10.3-7 ..... Revision 1
10.3-8 ..... Revision UMSS-00C
10.3-9 ..... Revision UMSS-00C

List of Effective Pages (continued)

10.4-1 ..... Revision 1
10.4-2 ..... Revision 1
10.4-3 ..... Revision 1
10.4-4 ..... Revision 1
10.4-5 ..... Revision 1
10.5-1 ..... Revision UMSS-99D
10.6-1 ..... Revision 1

Chapter 11

11-i ..... Revision 1
11-ii ..... Revision UMSS-99D
11-iii ..... Revision UMSS-99D
11-iv ..... Revision UMSS-00D
11-v ..... Revision 1
11-vi ..... Revision UMSS-00D
11-vii ..... Revision 1
11-viii ..... Revision 1
11-ix ..... Revision UMSS-99D
11-x ..... Revision UMSS-00A
11-1 ..... Revision 1
11.1.1-1 ..... Revision 1
11.1.1-2 ..... Revision 1
11.1.1-3 ..... Revision 1
11.1.1-4 ..... Revision 1
11.1.1-5 ..... Revision 1
11.1.1-6 ..... Revision 1
11.1.2-1 ..... Revision 1
11.1.2-2 ..... Revision 1
11.1.2-3 ..... Revision 1
11.1.3-1 ..... Revision 1
11.1.3-2 ..... Revision 1
11.1.3-3 ..... Revision 1
11.1.3-4 ..... Revision 1
11.1.3-5 ..... Revision 1
11.1.3-6 ..... Revision 1
11.1.3-7 ..... Revision 1
11.1.3-8 ..... Revision 1
11.1.3-9 ..... Revision 1
11.1.3-10 ..... Revision 1
11.1.3-11 ..... Revision 1
11.1.3-12 ..... Revision 1
11.1.3-13 ..... Revision 1
11.1.3-14 ..... Revision 1
11.1.3-15 ..... Revision 1
11.1.3-16 ..... Revision 1
11.1.4-1 ..... Revision UMSS-00D
11.1.4-2 ..... Revision 1
11.1.5-1 ..... Revision 1
11.1.5-2 ..... Revision 1
11.1.6-1 ..... Revision UMSS-00B
11.2-1 ..... Revision UMSS-00B
11.2.1-1 ..... Revision 1
11.2.1-2 ..... Revision 1
11.2.1-3 ..... Revision 1
11.2.1-4 ..... Revision 1
11.2.1-5 ..... Revision 1
11.2.1-6 ..... Revision 1
11.2.1-7 ..... Revision 1
11.2.1-8 ..... Revision 1
11.2.2-1 ..... Revision 1
11.2.3-1 ..... Revision 1
11.2.3-2 ..... Revision 1
11.2.4-1 ..... Revision 1
11.2.4-2 ..... Revision 1
11.2.4-3 ..... Revision 1
11.2.4-4 ..... Revision 1
11.2.4-5 ..... Revision 1
11.2.4-6 ..... Revision 1
11.2.4-7 ..... Revision 1
11.2.4-8 ..... Revision 1

List of Effective Pages (continued)

11.2.4-9 ..... Revision 1
11.2.4-10 ..... Revision 1
11.2.4-11 ..... Revision 1
11.2.4-12 ..... Revision 1
11.2.4-13 ..... Revision 1
11.2.4-14 ..... Revision 1
11.2.4-15 ..... Revision 1
11.2.4-16 ..... Revision 1
11.2.4-17 ..... Revision 1
11.2.4-18 ..... Revision 1
11.2.4-19 ..... Revision 1
11.2.4-20 ..... Revision 1
11.2.4-21 ..... Revision 1
11.2.4-22 ..... Revision 1
11.2.4-23 ..... Revision UMSS-00C
11.2.4-24 ..... Revision 1
11.2.4-25 ..... Revision UMSS-00C
11.2.4-26 ..... Revision 1
11.2.4-27 ..... Revision 1
11.2.4-28 ..... Revision 1
11.2.4-29 ..... Revision 1
11.2.4-30 ..... Revision 1
11.2.5-1 ..... Revision 1
11.2.6-1 ..... Revision 1
11.2.6-2 ..... Revision 1
11.2.6-3 ..... Revision 1
11.2.6-4 ..... Revision 1
11.2.6-5 ..... Revision 1
11.2.7-1 ..... Revision 1
11.2.7-2 ..... Revision 1
11.2.8-1 ..... Revision 1
11.2.8-2 ..... Revision 1
11.2.8-3 ..... Revision 1
11.2.8-4 ..... Revision 1
11.2.8-5 ..... Revision 1
11.2.8-6 ..... Revision 1
11.2.8-7 ..... Revision 1
11.2.8-8 ..... Revision 1
11.2.9-1 ..... Revision 1
11.2.9-2 ..... Revision 1
11.2.9-3 ..... Revision 1
11.2.9-4 ..... Revision 1
11.2.9-5 ..... Revision 1
11.2.9-6 ..... Revision 1
11.2.9-7 ..... Revision 1
11.2.10-1 ..... Revision 1
11.2.10-2 ..... Revision 1
11.2.10-3 ..... Revision 1
11.2.10-4 ..... Revision 1
11.2.11-1 ..... Revision 1
11.2.11-2 ..... Revision 1
11.2.11-3 ..... Revision 1
11.2.11-4 ..... Revision 1
11.2.11-5 ..... Revision 1
11.2.11-6 ..... Revision 1
11.2.11-7 ..... Revision 1
11.2.11-8 ..... Revision 1
11.2.11-9 ..... Revision 1
11.2.11-10 ..... Revision 1
11.2.11-11 ..... Revision 1
11.2.11-12 ..... Revision 1
11.2.11-13 ..... Revision 1
11.2.11-14 ..... Revision 1
11.2.12-1 ..... Revision 1
11.2.12-2 ..... Revision UMSS-00E
11.2.12-3 ..... Revision UMSS-00E
11.2.12-4 ..... Revision UMSS-00E
11.2.12-5 ..... Revision UMSS-00E
11.2.12-6 ..... Revision UMSS-00E
11.2.12-7 ..... Revision 1

List of Effective Pages (continued)

11.2.12-8 ..... Revision 1
11.2.12-9 ..... Revision 1
11.2.12-10 ..... Revision 1
11.2.12-11 ..... Revision 1
11.2.12-12 ..... Revision 1
11.2.12-13 ..... Revision 1
11.2.12-14 ..... Revision 1
11.2.12-15 ..... Revision 1
11.2.12-16 ..... Revision 1
11.2.12-17 ..... Revision 1
11.2.12-18 ..... Revision 1
11.2.12-19 ..... Revision 1
11.2.12-20 ..... Revision 1
11.2.12-21 ..... Revision 1
11.2.12-22 ..... Revision 1
11.2.12-23 ..... Revision 1
11.2.12-24 ..... Revision 1
11.2.12-25 ..... Revision 1
11.2.12-26 ..... Revision 1
11.2.12-27 ..... Revision 1
11.2.12-28 ..... Revision 1
11.2.12-29 ..... Revision 1
11.2.12-30 ..... Revision 1
11.2.12-31 ..... Revision 1
11.2.12-32 ..... Revision 1
11.2.12-33 ..... Revision 1
11.2.12-34 ..... Revision 1
11.2.12-35 ..... Revision 1
11.2.12-36 ..... Revision 1
11.2.12-37 ..... Revision 1
11.2.12-38 ..... Revision 1
11.2.12-39 ..... Revision 1
11.2.12-40 ..... Revision 1
11.2.12-41 ..... Revision 1
11.2.12-42 ..... Revision 1
11.2.12-43 ..... Revision 1
11.2.12-44 ..... Revision 1
11.2.12-45 ..... Revision 1
11.2.12-46 ..... Revision 1
11.2.12-47 ..... Revision 1
11.2.12-48 ..... Revision 1
11.2.12-49 ..... Revision 1
11.2.12-50 ..... Revision 1
11.2.12-51 ..... Revision 1
11.2.12-52 ..... Revision 1
11.2.12-53 ..... Revision 1
11.2.12-54 ..... Revision 1
11.2.12-55 ..... Revision 1
11.2.12-56 ..... Revision 1
11.2.12-57 ..... Revision 1
11.2.12-58 ..... Revision 1
11.2.12-59 ..... Revision 1
11.2.12-60 ..... Revision 1
11.2.12-61 ..... Revision 1
11.2.12-62 ..... Revision 1
11.2.12-63 ..... Revision 1
11.2.12-64 ..... Revision 1
11.2.12-65 ..... Revision 1
11.2.12-66 ..... Revision 1
11.2.12-67 ..... Revision 1
11.2.12-68 ..... Revision 1
11.2.12-69 ..... Revision 1
11.2.13-1 ..... Revision 1
11.2.13-2 ..... Revision 1
11.2.13-3 ..... Revision 1
11.2.14-1 ..... Revision 1
11.2.14-2 ..... Revision 1
11.2.15-1 ..... Revision UMSS-00B
11.2.15-2 ..... Revision UMSS-99D
11.2.15-3 ..... Revision UMSS-00A

List of Effective Pages (continued)

11.2.15-4 ..... Revision UMSS-00E
11.2.15-5 ..... Revision UMSS-00E
11.2.15-6 ..... Revision UMSS-00E
11.2.15-7 ..... Revision UMSS-00D
11.2.15-8 ..... Revision UMSS-00A
11.2.15-9 ..... Revision UMSS-00A
11.2.15-10 ..... Revision UMSS-00A
11.2.15-11 ..... Revision UMSS-00A
11.2.15-12 ..... Revision UMSS-00A
11.2.15-13 ..... Revision UMSS-00A
11.2.15-14 ..... Revision UMSS-00A
11.2.15-15 ..... Revision UMSS-00A
11.2.15-16 ..... Revision UMSS-00A
11.2.15-17 ..... Revision UMSS-00A
11.2.15-18 ..... Revision UMSS-00A
11.2.15-19 ..... Revision UMSS-00A
11.2.15-20 ..... Revision UMSS-00A
11.2.15-21 ..... Revision UMSS-00A
11.2.15-22 ..... Revision UMSS-00B
11.2.15-23 ..... Revision UMSS-00C
11.2.15-24 ..... Revision UMSS-00C
11.2.15-25 ..... Revision UMSS-00D
11.2.15-26 ..... Revision UMSS-00B
11.2.15-27 ..... Revision UMSS-00C
11.2.16-1 ..... Revision UMSS-00D
11.2.16-2 ..... Revision UMSS-00D
11.2.16-3 ..... Revision UMSS-00D
11.2.16-4 ..... Revision UMSS-00D
11.2.16-5 ..... Revision UMSS-00D
11.2.16-6 ..... Revision UMSS-00E
11.2.16-7 ..... Revision UMSS-00E
11.3-1 ..... Revision 1
11.3-2 ..... Revision 1
11.3-3 ..... Revision 1
11.3-4 ..... Revision UMSS-00D

Chapter 12

12-i ..... Revision UMSS-99D
12-ii ..... Revision UMSS-99D
12-1 ..... Revision UMSS-99D
12-2 ..... Revision UMSS-00A
12-3 ..... Revision UMSS-00B
12-4 ..... Revision UMSS-00C
12A-1 ..... Revision 1
12A-2 ..... Revision UMSS-00C
12A-3 ..... Revision UMSS-00D
12A1-1 ..... Revision UMSS-00B
12A1-2 ..... Revision UMSS-00B
12A1-3 ..... Revision UMSS-00A
12A1-4 ..... Revision UMSS-00B
12A1-5 ..... Revision UMSS-00D
12A1-6 ..... Revision UMSS-00E
12A1-7 ..... Revision UMSS-99D
12A1-8 ..... Revision UMSS-99D
12A1-9 ..... Revision UMSS-99D
12A1-10 ..... Revision UMSS-99D
12A1-11 ..... Revision UMSS-99D
12A1-12 ..... Revision UMSS-99D
12A1-13 ..... Revision UMSS-99D
12A1-14 ..... Revision UMSS-99D
12A1-15 ..... Revision UMSS-99D
12A1-16 ..... Revision UMSS-99D
12A1-17 ..... Revision UMSS-99D
12A2-1 ..... Revision 1
12A3-1 ..... Revision 1
12A3-2 ..... Revision 1
12A3-3 ..... Revision 1
12A3-4 ..... Revision UMSS-00C
12A3-5 ..... Revision UMSS-00C
12A3-6 ..... Revision UMSS-00C

List of Effective Pages (continued)

12A3-7 ..... Revision UMSS-00C
12A3-8 ..... Revision UMSS-00C
12A3-9 ..... Revision UMSS-00C
12A3-10 ..... Revision UMSS-00C
12A3-11 ..... Revision UMSS-00A
12A3-12 ..... Revision UMSS-00A
12A3-13 ..... Revision UMSS-00C
12A3-14 ..... Revision UMSS-00C
12A3-15 ..... Revision UMSS-00C
12A3-16 ..... Revision UMSS-00C
12A3-17 ..... Revision 1
12A3-18 ..... Revision 1
12A3-19 ..... Revision 1
12A3-20 ..... Revision UMSS-00C
12A3-21 ..... Revision 1
12A3-22 ..... Revision 1
12A3-23 ..... Revision UMSS-00C
12A3-24 ..... Revision 1
12A3-25 ..... Revision UMSS-00C
12A4-1 ..... Revision 1
12A5-1 ..... Revision UMSS-00C
12A5-2 ..... Revision UMSS-00C
12A5-3 ..... Revision UMSS-00D
12A5-4 ..... Revision UMSS-00C
12A5-5 ..... Revision UMSS-00D
12A5-6 ..... Revision UMSS-00D
12B-1 ..... Revision 1
12B-2 ..... Revision UMSS-00C
12B-3 ..... Revision UMSS-00C
12B1-1 ..... Revision UMSS-00A
12B2-1 ..... Revision UMSS-00C
12B2-2 ..... Revision UMSS-00C
12B2-3 ..... Revision UMSS-00C
12B2-4 ..... Revision UMSS-00C
12B2-5 ..... Revision UMSS-99D
12B2-6 ..... Revision UMSS-00C
12B2-7 ..... Revision UMSS-99D
12B2-8 ..... Revision UMSS-99D
12B2-9 ..... Revision UMSS-00C
12B2-10 ..... Revision UMSS-00C
12B2-11 ..... Revision UMSS-99D
12B2-12 ..... Revision UMSS-99D
12B2-13 ..... Revision UMSS-00E
12B2-14 ..... Revision UMSS-00C
12B2-15 ..... Revision UMSS-00E
12B2-16 ..... Revision UMSS-00C
12B2-17 ..... Revision UMSS-00C
12B2-18 ..... Revision UMSS-00C
12B3-1 ..... Revision UMSS-99D
12B3-2 ..... Revision 1
12B3-3 ..... Revision 1
12B3-4 ..... Revision UMSS-99D
12B3-5 ..... Revision UMSS-99D
12B3-6 ..... Revision 1
12B3-7 ..... Revision UMSS-99D
12B3-8 ..... Revision UMSS-00C
12B3-9 ..... Revision UMSS-00C
12B3-10 ..... Revision UMSS-00C
12B3-11 ..... Revision UMSS-00C
12B3-12 ..... Revision UMSS-00C
12B3-13 ..... Revision UMSS-00C
12C-1 ..... Revision 1
12C-2 ..... Revision UMSS-00C
12C1-1 ..... Revision 1
12C2-1 ..... Revision UMSS-00C
12C2-2 ..... Revision 1
12C3-1 ..... Revision 1
12C3-2 ..... Revision 1
12C3-3 ..... Revision 1
12C3-4 ..... Revision 1

List of Effective Pages (continued)

12C3-5 ..... Revision 1
12C3-6 ..... Revision 1
12C3-7 ..... Revision 1
12C3-8 ..... Revision 1
12C3-9 ..... Revision UMSS-00C
12C3-10 ..... Revision UMSS-00C
12C3-11 ..... Revision UMSS-00C
12C3-12 ..... Revision UMSS-00C
12C3-13 ..... Revision 1
12C3-14 ..... Revision 1
12C3-15 ..... Revision 1
12C3-16 ..... Revision 1
12C3-17 ..... Revision 1
12C3-18 ..... Revision 1
12C3-19 ..... Revision 1
12C3-20 ..... Revision UMSS-00C
12C3-21 ..... Revision UMSS-00C
12C3-22 ..... Revision 1
12C3-23 ..... Revision 1
12C3-24 ..... Revision 1
12C3-25 ..... Revision 1
12C3-26 ..... Revision 1
12C3-27 ..... Revision UMSS-00A
12C3-28 ..... Revision UMSS-00A
12C3-29 ..... Revision UMSS-00A
12C3-30 ..... Revision UMSS-00C
12C3-31 ..... Revision UMSS-00C
12C3-32 ..... Revision UMSS-00C
12C3-33 ..... Revision UMSS-00C
12C3-34 ..... Revision UMSS-00C
12C3-35 ..... Revision UMSS-00C
12C3-36 ..... Revision UMSS-00C
12C3-37 ..... Revision UMSS-99D
12C3-38 ..... Revision 1
12C3-39 ..... Revision 1
12C3-40 ..... Revision 1
12C3-41 ..... Revision 1
12C3-42 ..... Revision 1
12C3-43 ..... Revision 1
12C3-44 ..... Revision 1
12C3-45 ..... Revision UMSS-00C
12C3-46 ..... Revision 1
12C3-47 ..... Revision 1
12C3-48 ..... Revision 1
12C3-49 ..... Revision 1

Chapter 13

13-i ..... Revision 1
13-ii ..... Revision 1
13.1-1 ..... Revision 1
13.1-2 ..... Revision 1
13.2-1 ..... Revision 1
13.2-2 ..... Revision 1
13.2-3 ..... Revision 1
13.2-4 ..... Revision 1
13.2-5 ..... Revision 1
13.2-6 ..... Revision 1
13.2-7 ..... Revision 1
13.2-8 ..... Revision 1
13.3-1 ..... Revision 1

THIS PAGE INTENTIONALLY LEFT BLANK

Master Table of Contents (Continued)

9.1.6 Neutron-Absorber Tests 9.1-7
9.1.7 Thermal Tests 9.1-9
9.1.8 Cask Identification 9.1-10

9.2 Maintenance Program 9.2-1
9.2.1 UMS® Storage System Maintenance 9.2-1
9.2.2 Transfer Cask Maintenance 9.2-2

9.3 References 9.3-1

10.0 RADIATION PROTECTION 10.1-1

10.1 Ensuring That Occupational Radiation Exposures Are As Low As Is Reasonably Achievable (ALARA) 10.1-1
10.1.1 Policy Considerations 10.1-1
10.1.2 Design Considerations 10.1-1
10.1.3 Operational Considerations 10.1-2
10.2 Radiation Protection Design Features 10.2-1
10.2.1 Design Basis for Normal Storage Conditions 10.2-1
10.2.2 Design Basis for Accident Conditions 10.2-2

10.3 Estimated On-Site Collective Dose Assessment 10.3-1
10.3.1 Estimated Collective Dose for Loading a Single Universal Storage System 10.3-1
10.3.2 Estimated Annual Dose Due to Routine Operations 10.3-2
10.4 Exposure to the Public 10.4-1

10.5 Radiation Protection Evaluation for Site Specific Spent Fuel 10.5-1
10.5.1 Radiation Protection Evaluation for Maine Yankee Site Specific Spent Fuel 10.5-1

10.6 References 10.6-1

Master Table of Contents (Continued)

11.0 ACCIDENT ANALYSES 11-1

11.1 Off-Normal Events 11.1.1-1
11.1.1 Severe Ambient Temperature Conditions (106°F and -40°F) 11.1.1-1
11.1.1.1 Cause of Severe Ambient Temperature Event 11.1.1-1
11.1.1.2 Detection of Severe Ambient Temperature Event 11.1.1-1
11.1.1.3 Analysis of Severe Ambient Temperature Event 11.1.1-1
11.1.1.4 Corrective Actions 11.1.1-2
11.1.1.5 Radiological Impact 11.1.1-2
11.1.2 Blockage of Half of the Air Inlets 11.1.2-1
11.1.2.1 Cause of the Blockage Event 11.1.2-1
11.1.2.2 Detection of the Blockage Event 11.1.2-1
11.1.2.3 Analysis of the Blockage Event 11.1.2-1
11.1.2.4 Corrective Actions 11.1.2-2
11.1.2.5 Radiological Impact 11.1.2-2
11.1.3 Off-Normal Canister Handling Load 11.1.3-1
11.1.3.1 Cause of the Off-Normal Canister Handling Event 11.1.3-1
11.1.3.2 Detection of the Off-Normal Canister Handling Event 11.1.3-1
11.1.3.3 Analysis of the Off-Normal Canister Handling Event 11.1.3-1
11.1.3.4 Corrective Actions 11.1.3-3
11.1.3.5 Radiological Impact 11.1.3-3
11.1.4 Failure of Instrumentation 11.1.4-1
11.1.4.1 Cause of Instrumentation Failure Event 11.1.4-1
11.1.4.2 Detection of Instrumentation Failure Event 11.1.4-1
11.1.4.3 Analysis of Instrumentation Failure Event 11.1.4-1
11.1.4.4 Corrective Actions 11.1.4-2
11.1.4.5 Radiological Impact 11.1.4-2
11.1.5 Small Release of Radioactive Particulate From the Canister Exterior 11.1.5-1
11.1.5.1 Cause of Radioactive Particulate Release Event 11.1.5-1
11.1.5.2 Detection of Radioactive Particulate Release Event 11.1.5-1
11.1.5.3 Analysis of Radioactive Particulate Release Event 11.1.5-1
11.1.5.4 Corrective Actions 11.1.5-2
11.1.5.5 Radiological Impact 11.1.5-2

Table 1-1 Terminology (Continued)

Maine Yankee Fuel Can	A specially designed stainless steel screened can sized to hold an intact fuel assembly, consolidated fuel, or damaged fuel. The can screens permit draining and drying, while precluding the release of gross particulates into the canister cavity. The Maine Yankee Fuel Can may only be loaded in a Class 1 Canister.
Transportable Storage Canister (Canister)	The stainless steel cylindrical shell, bottom end plate, shield lid, and structural lid that contain the fuel basket structure and the contents.
Shield Lid	A thick stainless steel disk that is located directly above the fuel basket. The shield lid comprises the first part of a double-welded closure system for the Transportable Storage Canister. The shield lid provides a containment/confinement boundary for storage and shielding for the contents.
- Drain Port	A penetration located in the shield lid to permit draining of the canister cavity.
- Vent Port	A penetration located in the shield lid to aid in draining and in vacuum drying and backfilling the canister with helium.
- Port Cover	The stainless steel covers that close the vent and drain ports, and that are welded in place following draining, drying, and backfilling operations.
- Quick Disconnect	The valved nipple used in the vent and drain ports to facilitate operations.
Structural Lid	A thick stainless steel disk that is positioned on top of the shield lid and welded to the canister. The structural lid is the second part of a double-welded closure system for the Transportable Storage Canister. The structural lid provides a confinement boundary for storage, shielding for the contents, and canister lifting/handling capability.

Table 1-1 Terminology (Continued)

Fuel Basket (Basket)	The structure located within the Transportable Storage Canister that provides structural support, criticality control, and primary heat transfer paths for the fuel assemblies.
- Support Disk	The primary lateral load-bearing component of the fuel basket. The PWR support disk is a circular stainless steel plate with 24 square holes machined in a symmetrical pattern. The BWR support disk is a circular carbon steel plate with 56 square holes machined in a symmetrical pattern. Each square hole is a location for a fuel tube.
- Heat Transfer Disk	A circular aluminum plate with 24 (PWR basket) or 56 (BWR basket) square holes machined in a symmetrical pattern. The heat transfer disk enhances heat transfer in the fuel basket.
- Fuel Tube	A stainless steel tube having a square cross-section with enclosed BORAL neutron poison material on its exterior surfaces. One fuel tube is inserted through each square hole in the support disks and heat transfer disks. Fuel assemblies are loaded into the fuel tube.
- Tie Rod	A stainless steel rod used to align, retain, and support the support disks and the heat transfer disks in the fuel basket structure. The tie rods extend from the top weldment to the bottom weldment.
- Spacer	Installed on the tie rod between the support disks (BWR only) or between the support disks and top and bottom weldments (BWR and PWR) to properly position the disks and provide axial support for the support disks.
- Split Spacer	Spacers installed on the tie rod between the support disks and the heat transfer disks to properly position the disks and provide axial support for the support disks and the heat transfer disks.

1.8 License Drawings

This section presents the list of License Drawings for the Universal Storage System.

1.8.1 License Drawings for the UMS® Universal Storage System

Drawing Number	Title	Revision No.	No. of Sheets
790-501	Canister/ Basket Assembly Table, NAC-UMS®	2	1
790-559	Assembly, Transfer Adapter, NAC-UMS®	2	3
790-560	Assembly, Transfer Cask (TFR) NAC-UMS®	7	5
790-561	Weldment, Structure, Vertical Concrete Cask (VCC), NAC-UMS®	5	3
790-562	Reinforcing Bar And Concrete Placement, Vertical Concrete Cask (VCC), NAC-UMS®	5	4
790-563	Lid, Vertical Concrete Cask (VCC), NAC-UMS®	3	1
790-564	Shield Plug, Vertical Concrete Cask (VCC), NAC-UMS®	2	1
790-565	Nameplate, Vertical Concrete Cask (VCC), NAC-UMS®	1	1
790-570	Fuel Basket Assembly, 56 Element BWR, NAC-UMS®	3	2
790-571	Bottom Weldment, Fuel Basket, 56 Element BWR, NAC-UMS®	2	1
790-572	Top Weldment, Fuel Basket, 56 Element BWR, NAC-UMS®	4	1
790-573	Support Disk and Misc. Basket Details, 56 Element BWR, NAC-UMS®	6	1
790-574	Heat Transfer Disk, Fuel Basket, 56 Element BWR, NAC-UMS®	3	1
790-575	BWR Fuel Tube, NAC-UMS®	4	2
790-581	PWR Fuel Tube, NAC-UMS®	5	2
790-582	Shell Weldment, Canister, NAC-UMS®	6	1
790-583	Assembly, Drain Tube, Canister, NAC-UMS®	4	1
790-584	Details, Canister, NAC-UMS®	8	2
790-585	Transportable Storage Canister (TSC), NAC-UMS®	7	2
790-590	Loaded Vertical Concrete Cask (VCC), NAC-UMS®	1	1
790-591	Bottom Weldment, Fuel Basket, 24 Element PWR, NAC-UMS®	2	1

License Drawings
(Continued)

Drawing Number	Title	Revision No.	No. of Sheets
790-592	Top Weldment, Fuel Basket, 24 Element PWR, NAC-UMS®	4	1
790-593	Support Disk and Misc. Basket Details, 24 Element PWR, NAC-UMS®	4	1
790-594	Heat Transfer Disk, Fuel Basket, 24 Element PWR, NAC-UMS®	2	1
790-595	Fuel Basket Assembly, 24 Element PWR, NAC-UMS®	4	2
790-605	BWR Fuel Tube, Over-Sized Fuel, NAC-UMS®	5	2

1.8.2 Site Specific Spent Fuel License Drawings

Drawing Number	Title	Revision No.	No. of Sheets
412-501	Spent Fuel Can Assembly, Maine Yankee (MY), NAC-UMS®	2	1
412-502	Fuel Can Details, Maine Yankee (MY), NAC-UMS®	2	4

K-133798

DCR No.	REVISION
0	INITIAL ISSUE
1	INC DCR 0A
2	INC DCR 1A

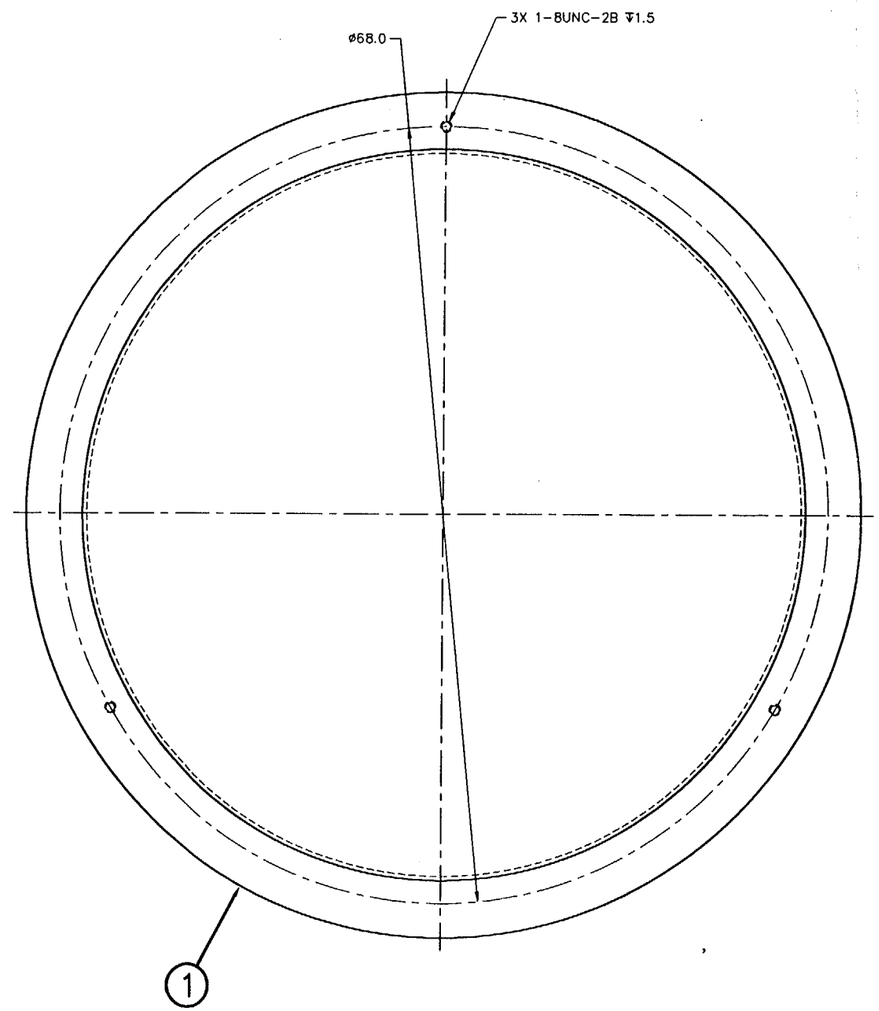

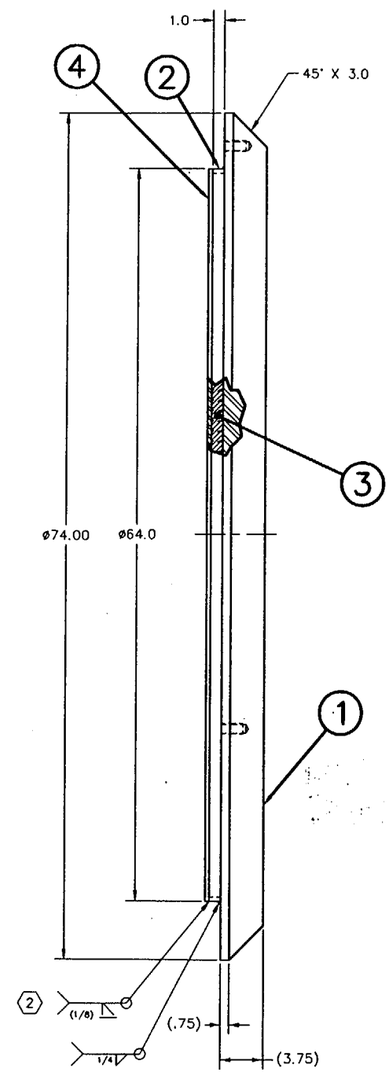

2 NEUTRON SHIELD TO CONTAIN 0.6 WEIGHT PERCENT B_4C MINIMUM.

1. REMOVE ANY OIL AND GREASE FROM ALL SURFACES IN ACCORDANCE WITH SSPC-SP 1. COMMERCIAL BLAST CLEAN PER SSPC-SP 6. APPLY CARBOLINE 890 OR KEELER & LONG E-SERIES EPOXY ENAMEL COATING PER MANUFACTURERS APPLICATION INSTRUCTIONS.

NOTES:

85	96	97	98	99	ITEM	NAME	MATERIAL	SPEC	DRAWING No.	DESCRIPTION
				1	4	NS COVER	CARBON STEEL	ASTM A36		3/8 PLATE
				A/R	3	NEUTRON SHIELD	NS-4-FR	COMMERCIAL		
				1	2	NS RETAINING RING	CARBON STEEL	ASTM A36		3/8 BAR/PLATE
				1	1	SHIELD PLUG	CARBON STEEL	ASTM A36		3 3/4 PLATE
ASSY	ASSY	ASSY	ASSY	ASSY						
QUANTITY										

DIMENSIONING AND TOLERANCING SHALL BE PER ANSI Y14.5-82
UNSPECIFIED DIMENSIONS AND TOLERANCES SHOWN BELOW.
DIMENSIONS ARE IN INCHES. FRACTIONAL TOLERANCE: ±1/8

SYM.	GEOMETRY	.XXX	TOL.	.XX	TOL.
	FLATNESS	UNDER 3		UNDER 6	±.04
		3-12		6-18	±.06
	STRAIGHTNESS	OVER 12		OVER 18	±.09
	ANGULARITY	.X	±.1	ANGLES ±.5°	
	PERPENDICULARITY	ALL UNSPECIFIED TOOL RADII: .01 - .03			
	PARALLELISM	BREAK ALL SHARP CORNERS .01 - .03			
	CONCENTRICITY	ALL UNSPECIFIED MACHINED SURFACES SHALL BE ▽OR BETTER			
	TRUE POSITION	NEXT ASSEMBLY: 790-590			
		DRAWING TYPE: LICENSE			

GROUP	NAME	DATE
PREPARER	R. Walker	9-30-99
CHECKER	[illegible]	9/30/99
PROJECT MANAGER	[illegible]	10/4/99
DIRECTOR, DESIGN AND ANALYSIS	[illegible]	10/8/99
DIRECTOR, LICENSING	[illegible]	10/8/99
VICE PRESIDENT, QUALITY	[illegible] for	10/8/99

NAC INTERNATIONAL

SHIELD PLUG,
VERTICAL CONCRETE CASK (VCC)
NAC-UMS®

PROJECT	DRAWING	REV
790	564	2
SCALE 1/5	EST.WT. 4845#	SH 1 OF 1

2 37PM 9-30-99

connect the end fittings. The top end fitting is designed so that the lattice can be handled by the standard fuel assembly lifting fixture (grapple). These lattices were not used in the reactor and the stainless steel hardware is not activated.

One of these lattices contains 283 fuel rods and 2 rod position vacancies. The other contains 172 fuel rods, with the 76 stainless steel dummy rods in the outer periphery of the lattice.

The consolidated fuel is placed in a Maine Yankee fuel can for storage. No credit is taken for the lattice structures in the criticality, structural, or thermal analysis.

2.1.3.1.3 Maine Yankee Spent Fuel with Inserted Integral Hardware

Certain Maine Yankee fuel assemblies have either a Control Element Assembly or an Instrument Thimble inserted in the fuel assembly. These components add to the gamma radiation source term of the standard fuel assembly.

A Maine Yankee Control Element Assembly (CEA) consists of five control rods mounted on a Type 304 stainless steel spider assembly. The five control rods are inserted in the fuel assembly guide tubes when the CEA is inserted in the fuel assembly. When fully inserted, the control element spider rests on the fuel assembly upper end fitting. The rods are fabricated from Inconel 625 or stainless steel and encapsulate B_4C as the primary neutron poison material. Fuel assemblies with a control element installed must be loaded into a Class 2 canister because of the additional height that the control element spider adds to the fuel assembly overall length.

Some standard fuel assemblies have an in-core instrument thimble inserted in the center guide tube of the fuel assembly. The detector material and lead wire have been removed from the thimble assembly. The thimble top end and tube are primarily Zircaloy. When installed, the instrument thimble does not add to the overall fuel assembly length. Consequently, fuel assemblies with instrument thimbles are loaded in the Class 1 canister.

2.1.3.1.4 Maine Yankee Spent Fuel with Unique Design

Certain Maine Yankee fuel assemblies were uniquely designed to accommodate reactor physics. These assemblies incorporate variable radial enrichment and axial blankets.

Two batches of fuel used at Maine Yankee contain variably enriched fuel rods. The maximum fuel rod enrichment of one batch is 4.21 wt % ^{235}U with the variably enriched rods enriched to 3.5 wt % ^{235}U. The maximum planar average enrichment of this batch is 3.99 wt % ^{235}U. For the other batch, the maximum fuel rod enrichment is 4.0 wt % ^{235}U, with the variably enriched rods enriched to 3.4 wt % ^{235}U. The maximum planar average enrichment of this batch is 3.92 wt % ^{235}U.

One batch of variably enriched fuel also incorporates axial end blankets with fuel pellets that have a center hole, referred to as annular fuel pellets. Annular fuel pellets are used in the top and bottom 5% of the active fuel length of each fuel rod in this batch.

2.1.3.1.5 Maine Yankee Fuel Can

Fuel assemblies classified as damaged and certain undamaged fuel configurations are loaded in a Maine Yankee fuel can, which is shown in Drawings 412-501 and 412-502. The fuel can may be loaded only in a corner position in the basket. The fuel can analysis assumes the failure of 100 % of the fuel rods held in the fuel can.

The fuel can is sized to accommodate a fuel assembly and to be inserted in a corner position of the fuel basket. As shown in the drawings, the can is 162.8 inches in length and has an external square dimension of 8.62 inches and an internal square dimension of 8.52 inches. In the top 4.5 inches the external square dimension is 8.82 inches. The fuel can is closed on the bottom end by a 0.63-inch thick plate that is welded to the can shell. The plate has drilled holes in each corner to allow water to drain from the can. A screen covers the holes to preclude the release of gross particulates from the fuel can. A lid having an overall depth dimension of 2.38 inches closes the can. The lid is not secured to the can shell, but is held in place when the shield lid is installed in the canister. The lid also has four drilled and screened holes. The damaged fuel is inserted in the fuel can and the lid is installed. Lifting lugs in the can shell allow the loaded can to be lifted and installed in the basket. Alternately, the fuel can may be inserted in a basket corner position before the damaged fuel assembly is inserted in the fuel can. Since the fuel can lid is held in place by the canister shield lid, the fuel can may be used only in the Class 1 canister.

A Maine Yankee fuel can containing fuel debris with greater than 20 Curies of plutonium, requires double containment for transport conditions in accordance with 10 CFR 71.63 (b).

Table 2.1.3.1-1 Maine Yankee Site Specific Fuel Population

Site Specific Spent Fuel Configuration	Est. Number of Assemblies[1,2]	Canister Loading Position[3]
Inserted Control Element Assembly (CEA)[4,5,6]	168	Any
Inserted In-Core Instrument (ICI) Thimble	138	Any
Consolidated Fuel	2	Corner[7,8,9]
Fuel Rod Replaced by Rod Enriched to 1.95 wt %	3	Any
Fuel Rod Replaced by Stainless Steel Rod or Zircaloy Rod	18	Any
Fuel Rods Removed	10	Corner
Variable Enrichment	72	Any
Variable Enrichment and Axial Blanket	68	Any
Burnable Poison Rod Replaced by Hollow Zircaloy Rod	80	Corner
Damaged Fuel[10,11]	12	Corner
Burnup between 45,000 and 50,000 MWD/MTU	90	Periphery[12]
Maine Yankee Fuel Can	As Required	Corner[13]

1. The total number of fuel assemblies in inventory, including these site specific spent fuel configurations and standard spent fuel assemblies, is approximately 1,434.
2. The number of fuel assemblies in some categories may vary depending on future fuel inspections.
3. Standard fuel assemblies may be loaded in any position.
4. A fuel assembly with an inserted CEA must be loaded in a Class 2 canister.
5. A fuel assembly without an inserted CEA must not be loaded in a Class 2 canister.
6. CEAs may not be inserted in damaged fuel assemblies, consolidated fuel assemblies or assemblies with irradiated stainless steel replacement rods.
7. Basket corner positions are positions 3, 6, 19, and 22 in Figure 12B2-1. Corner positions are also periphery positions.
8. Only one Consolidated Fuel lattice may be loaded in any Transportable Storage Canister.
9. Consolidated Fuel must be loaded in a Maine Yankee fuel can.
10. All fuel classified as damaged must be placed in a Maine Yankee fuel can, including fuel assemblies with damaged fuel rods or poison rods inserted in guide tubes.
11. All spent fuel, including that held in a Maine Yankee fuel can, must conform to the loading limits presented in Tables 12B2-8 and 12B2-9 for cool time. The fuel maximum planar average enrichment should be used for variable enriched assemblies when determining minimum cool time.
12. Basket periphery positions are positions 1, 2, 3, 6, 7, 12, 13, 18, 19, 22, 23, and 24 in Figure 12B2-1. Periphery positions include the corner positions.
13. The Maine Yankee fuel can may be loaded only in a Class 1 canister.

Table 2.1.3.1-2 Maine Yankee Fuel Can Design and Fabrication Specification Summary

Design

- The Maine Yankee Fuel Can shall be designed in accordance with ASME Code, Section III, Subsection NG except for: 1) the noted exceptions of table 12B3-1 for fuel basket structures; and 2) the Maine Yankee Fuel Can may deform under accident conditions of storage.
- The Maine Yankee Fuel Can will have screened vents in the lid and base plate. Stainless steel meshed screens (250x250) shall cover all openings.
- The Maine Yankee Fuel Can shall limit the release of material from damaged fuel assemblies and fuel debris to the canister cavity.
- The Maine Yankee Fuel Can lifting structure and lifting tool shall be designed with a minimum factor of safety of 3.0 on material yield strength.

Materials

- All material shall be in accordance with the referenced drawings and meet the applicable ASME Code sections.
- All structural materials are ASME SA 240, Type 304 stainless steel.

Welding

- All welds shall be in accordance with the referenced drawings.
- The final surface of all welds shall be liquid penetrant examined in accordance with ASME Code Section V, Article 6, with acceptance in accordance with ASME Code, Section NG-5350.

Fabrication

- All cutting, welding, and forming shall be in accordance with ASME Code Section III, NG-4000.

Acceptance Testing

- The Maine Yankee Fuel Can (first unit) and handling tool shall be load tested and visually inspected at the completion of fabrication.

Quality Assurance

- The Maine Yankee Fuel Can shall be constructed under a quality assurance program that meets 10 CFR 72 Subpart G. The quality assurance program must be accepted by NAC International and the licensee prior to initiation of the work.
- A Certificate of Conformance (or Compliance) shall be issued by the fabricator stating that the component meets the specifications and drawings.

3.3 Mechanical Properties of Materials

The mechanical properties of steels used in the fabrication of the Universal Storage System components are presented in Tables 3.3-1 through 3.3-10. The primary steels, Type 304 and Type 304L stainless steel, were selected because of their high strength, ductility, resistance to corrosion and brittle fracture, and metallurgical stability for long-term storage.

3.3.1 Primary Component Materials

The steels and aluminum alloy used in the fabrication of the canister and basket are:

Canister shell	ASME SA-240, Type 304L stainless steel
Canister bottom plate	ASME SA-240, Type 304L stainless steel
Canister shield lid	ASME SA-240, Type 304 stainless steel
Canister structural lid	ASME SA-240, Type 304L stainless steel
Support disks	
PWR basket	ASME SA-693, Type 630, 17-4 PH stainless steel
BWR basket	ASME SA-533, Type B Class 2 carbon steel
Heat transfer disks	ASME SB-209, Type 6061-T651 aluminum alloy
Spacer nuts	ASME SA-479, Type 304 stainless steel
Tie rods	ASME SA-479, Type 304 stainless steel
Basket end weldments	ASME SA-240, Type 304 stainless steel
Fuel tubes	ASTM A240, Type 304 stainless steel

SA-182 Type 304 stainless steel may be substituted for SA-240 Type 304 stainless steel for the shield lid provided that the SA-182 material has yield and ultimate strengths greater than or equal to those of the SA-240 material. SA-182 Type 304L stainless steel may be substituted for SA-240 Type 304L stainless steel for the structural lid provided that the SA-182 material has yield and ultimate strengths greater than or equal to those of the SA-240 material.

Steels used in the fabrication of the vertical concrete cask are:

Inner shell	ASTM A36 carbon steel
Pedestal and base	ASTM A36 carbon steel
Reinforcing bar	ASTM A615, Grade 60 carbon steel

The steels used in the fabrication of the transfer cask are:

Inner shell	ASTM A588 low alloy steel
Outer shell	ASTM A588 low alloy steel
Bottom plate	ASTM A588 low alloy steel
Top plate	ASTM A588 low alloy steel
Retaining ring	ASTM A588 low alloy steel
Trunnions	ASTM A350, LF2 low alloy steel
Shield doors and rails	ASTM A350, LF2 low alloy steel
Retaining ring bolts	ASTM A193, Grade B6, high alloy steel

The mechanical properties of the 6061-T651 aluminum heat transfer disks in the fuel basket are shown in Table 3.3-11. The mechanical properties of the concrete are listed in Table 3.3-12.

Table 3.3-1 Mechanical Properties of SA-240 and A-240 Type 304 Stainless Steel

Property*	**Value**							
Temperature (°F)	-40	-20	70	200	300	400	500	750
Ultimate strength,[10] S_u (ksi)	75.0	75.0	75.0	71.0	66.0	64.4	63.5	63.1
Yield strength,[10] S_y (ksi)	30.0	30.0	30.0	25.0	22.5	20.7	19.4	17.3
Design Stress Intensity,[10] S_m (ksi)	20.0	20.0	20.0	20.0	20.0	18.7	17.5	15.6
Modulus of Elasticity,[10] E ($\times 10^3$ ksi)	28.7	28.7	28.3	27.6	27.0	26.5	25.8	24.4
Alternating Stress [11] @ 10 cycles (ksi)	718.0	718.0	708.0	690.5	675.5	663.0	645.5	610.4
Alternating Stress [11] @ 10^6 cycles (ksi)	28.7	28.7	28.3	27.6	27.0	26.5	25.8	24.4
Coefficient of Thermal Expansion,[10] α ($\times 10^{-6}$ in/in/°F)	8.13	8.19	8.46	8.79	9.00	9.19	9.37	9.76
Poisson's Ratio[10]	0.31							
Density[10]	503 lbm/ft^3 (0.291 lbm/in^3)							

* SA-182, Type 304 stainless steel may be substituted for SA-240 Type 304 stainless steel provided that the SA-182 material yield and ultimate strengths are equal to or greater than those of the SA-240 material. The SA-182 forging material and the SA-240 plate material are both Type 304 austenitic stainless steels. Austenitic stainless steels do not experience a ductile-to-brittle transition for the range of temperatures considered in this Safety Analysis Report. Therefore, fracture toughness is not a concern.

10 ASME Code, Section II, Part D.

11 ASME Code, Appendix I.

Table 3.3-2 Mechanical Properties of SA-479, Type 304 Stainless Steel

Property	Value							
Temperature (°F)	-40	-20	+70	+200	+300	+400	+500	+750
Ultimate strength, S_u, (ksi) *	—	75.0	75.0	71.0	66.0	64.4	63.5	63.1
Yield strength, S_y, (ksi) *	—	30.0	30.0	25.0	22.5	20.7	19.4	17.3
Design Stress Intensity,[10] S_m,(ksi)	20.0	20.0	20.0	20.0	20.0	18.7	17.5	15.6
Modulus of Elasticity[10] ($\times 10^3$ ksi)	28.8	28.7	28.3	27.6	27.0	26.5	25.8	24.4
Alternating Stress[11] @ 10 cycles (ksi)	720	718	708	683	675	663	645	610
Alternating Stress[11] @ 10^6 cycles (ksi)	28.8	28.7	28.3	27.6	27.0	26.5	25.8	24.4
Coefficient of Thermal Expansion,[10] α ($\times 10^{-6}$ in/in/°F)	—		8.46	8.79	9.00	9.19	9.37	9.76
Poisson's Ratio[10]	0.31							
Density[10]	503 lbm/ft^3 (0.291 lbm/in^3)							

[10] ASME Code, Section II, Part D.

[11] ASME Code, Appendix I.

* Calculated based on Design Stress Intensity:

$$\left(\frac{S_{m-temp}}{S_{m\,70^\circ}}\right) S_{u70} = S_{u-temp}$$

Table 3.3-3 Mechanical Properties of SA-240, Type 304L Stainless Steel

Property*	**Value**							
Temperature (°F)	-40	-20	70	200	300	400	500	750
Ultimate strength,[10] S_u, (ksi)	70.0	70.0	70.0	66.2	60.9	58.5	57.8	55.9
Yield strength,[10] S_y, (ksi)	25.0	25.0	25.0	21.4	19.2	17.5	16.4	14.7
Design Stress Intensity,[10] S_m,(ksi)	16.7	16.7	16.7	16.7	16.7	15.8	14.8	13.3
Modulus of Elasticity[10] ($\times 10^3$ ksi)	28.7	28.7	28.3	27.6	27.0	26.5	25.8	24.4
Alternating Stress[11] @ 10 cycles (ksi)	718.0	718.0	708.0	690.5	675.5	663.0	645.5	610.4
Alternating Stress[11] @ 10^6 cycles (ksi)	28.7	28.7	28.3	27.6	27.0	26.5	25.8	24.4
Coefficient of Thermal Expansion,[10] α ($\times 10^{-6}$ in/in/°F)	8.13	8.19	8.46	8.79	9.00	9.19	9.37	9.76
Poisson's Ratio[10]	0.31							
Density[10]	503 lbm/ft^3(0.291 lbm/in^3)							

* SA-182, Type 304L stainless steel may be substituted for SA-240 Type 304L stainless steel provided that the SA-182 material yield and ultimate strengths are equal to or greater than those of the SA-240 material. The SA-182 forging material and the SA-240 plate material are both Type 304L austenitic stainless steels. Austenitic stainless steels do not experience a ductile-to-brittle transition for the range of temperatures considered in this Safety Analysis Report. Therefore, fracture toughness is not a concern.

10 ASME Code, Section II, Part D.

11 ASME Code, Appendix I.

Table 3.3-4 Mechanical Properties of SA-564 and SA-693, Type 630, 17-4 PH Stainless Steel

Property	Value								
Temperature (°F)	-40	-20	70	200	300	400	500	650	800
Ultimate strength,[10] S_u, (ksi)	135.0	135.0	135.0	135.0	135.0	131.4	128.5	125.7	105.3[15]
Yield strength,[10] S_y, (ksi)	105.0	105.0	105.0	97.1	93.0	89.8	87.0	83.6	77.7[15]
Design Stress Intensity,[10] S_m,(ksi)	45.0	45.0	45.0	45.0	45.0	43.8	42.8	41.9	35.1
Modulus of Elasticity[10] ($\times 10^3$ ksi)	28.7	28.7	28.3	27.6	27.0	26.5	25.8	25.1	24.1
Alternating Stress[11] @ 10 cycles (ksi)	401.8	401.8	396.2	386.4	378.0	371.0	361.2	341.6	--
Alternating Stress[11] @ 10^6 cycles (ksi)	19.1	19.1	18.9	18.4	18.0	17.7	17.2	16.3	--
Coefficient of Thermal Expansion,[10] α ($\times 10^{-6}$ in/in/°F)	—		5.89	5.90	5.90	5.91	5.91	5.93	5.96
Poisson's Ratio[10]	0.31								
Density[10]	503 lbm/ft^3 (0.291 lbm/in^3)								

[10] ASME Code, Section II, Part D.

[11] ASME Code, Section III, Appendix I.

[15] MIL-HDBK-5G.

Table of Contents

9.0 ACCEPTANCE CRITERIA AND MAINTENANCE PROGRAM 9.1-1

9.1 Acceptance Criteria 9.1-1
- 9.1.1 Visual and Nondestructive Examination Inspection 9.1-1
  - 9.1.1.1 Nondestructive Weld Examination 9.1-3
  - 9.1.1.2 Fabrication Inspections 9.1-4
  - 9.1.1.3 Construction Inspections 9.1-4
- 9.1.2 Structural and Pressure Test 9.1-5
- 9.1.3 Leak Tests 9.1-6
- 9.1.4 Component Tests 9.1-7
  - 9.1.4.1 Valves, Rupture Disks and Fluid Transport Devices 9.1-7
  - 9.1.4.2 Gaskets 9.1-7
- 9.1.5 Shielding Tests 9.1-7
- 9.1.6 Neutron-Absorber Tests 9.1-7
- 9.1.7 Thermal Tests 9.1-9
- 9.1.8 Cask Identification 9.1-10

9.2 Maintenance Program 9.2-1
- 9.2.1 UMS® Storage System Maintenance 9.2-1
- 9.2.2 Transfer Cask Maintenance 9.2-2

9.3 References 9.3-1

THIS PAGE INTENTIONALLY LEFT BLANK

9.0 ACCEPTANCE CRITERIA AND MAINTENANCE PROGRAM

This chapter specifies the acceptance criteria and the maintenance program for the Universal Storage System primary components - the Vertical Concrete Cask and Transportable Storage Canister. The system components, such as the concrete cask liner, base and air outlets, and the canister shell with the bottom plate, the shield and structural lids, and the basket that holds the spent fuel, are shop fabricated. The concrete cask consists of reinforced concrete placed around the steel liner and base that are integral to its performance. The liner forms the central cavity of the vertical concrete cask, which is mounted on the base. The liner/base interface forms air inlet passageways to the central cavity. The inlets allow cool ambient air to be drawn in and passed by the canister that contains the fuel. Air outlets at the top of the concrete cask allow the air heated by the canister wall and concrete cask liner to be discharged. The base of the concrete cask acts as a pedestal to support the canister during storage.

The concrete reinforcing steel (rebar) is bent in the shop and delivered to the concrete cask construction site. Concrete cask construction begins with the erection of the cask liner onto the steel base. Reinforcing steel is placed around the liner, followed by a temporary outer form which encircles the cask liner and reinforcing steel. The temporary form creates an annulus region between the liner and the form into which the concrete is placed.

As described in Section 8.1.3, the vertical concrete cask is either lifted by hydraulic jacks and moved by using air pads underneath the base or lifted using the lifting lugs and moved using a mobile lifting frame.

9.1 Acceptance Criteria

The acceptance criteria specified below ensure that the concrete cask, including the liner, base, and canister are fabricated, assembled, inspected and tested in accordance with the requirements of this SAR and the license drawings.

9.1.1 Visual and Nondestructive Examination Inspection

The acceptance test program establishes a set of visual inspections, nondestructive examinations and test requirements and corresponding criteria to determine the adequacy of the fabricated components and sub-components. Similar acceptance requirements and criteria are established for the on-site concrete cask construction. Once in service, cask performance monitoring is used

to assure that the cask is operating within the expected temperature range. Satisfactory results for these inspections, examinations and tests demonstrate that the components comply with the requirements of this Safety Analysis Report and the license drawings.

A fit-up test of the canister shell and sub-components is performed during the canister acceptance inspection. The fit-up test demonstrates that the canister, basket, shield lid and structural lid can be properly assembled during canister closure operations, and that the fuel assemblies can be installed in the fuel tubes.

A visual inspection is performed on all materials used for concrete cask, canister and basket fabrication. The visual inspection applies to finished surfaces of the components. All welds (shop and field installed) are visually inspected for defects prior to the nondestructive examinations that may also be specified. The welding of the canister is performed in accordance with ASME Code, Section III, Subsection NB-4000 [1], except as described by this Safety Analysis Report. (See Section 7.1.)

The visual inspections of the canister welds are performed in accordance with the ASME Code, Section V, Article 9 [2]. Acceptance criteria for the visual examinations of the canister welds are in accordance with ASME Code, Section VIII, Division 1, UW-35 and UW-36 [3]. Unacceptable welds in the canister are repaired as required by ASME Code, Section III, Subsection NB-4450 and reexamined in accordance with the original acceptance criteria.

Welding of the vertical concrete cask's steel components, including field installed welds, is performed in accordance with ANSI/AWS D1.1-96 [4], or ASME Code Section VIII, Division 1, Part UW, and inspected in accordance with ANSI/AWS D1.1, Section 8.15.1, or ASME Code Section VIII, Division 1, UW-35 and UW-36. Weld procedures and welder qualifications shall be in accordance with ANSI/AWS D1.1, Section 5 or ASME Code, Section IX [5].

Welding of the basket assemblies for spent fuel is performed in accordance with ASME Code, Section III, Subsection NG-4000 [6]. Visual examination of the welds is performed per the requirements of ASME Code, Section V, Article 9. Acceptance criteria for the visual examination of the basket assembly welds are those of ASME Code, Section III, Paragraphs NB-4424 and NB-4427. Any required weld repairs are performed in accordance with ASME Code, Section III, Subsection NG-4450 and reexamined in accordance with the original acceptance criteria.

9.2 Maintenance Program

This section presents the maintenance requirements for the UMS® Universal Storage System and for the transfer cask.

9.2.1 UMS® Storage System Maintenance

The Universal Storage System is a passive system. No active components or systems are incorporated in the design. Consequently, only a minimal amount of maintenance is required over its lifetime .

The Universal Storage System has no valves, gaskets, rupture discs, seals, or accessible penetrations. Consequently, there is no maintenance associated with these types of features.

The routine surveillance requirements are described in Technical Specification LCO 3.1.6 in Appendix 12A of Chapter 12. It is not necessary to inspect the concrete cask or canister during the storage period as long as the thermal performance is normal, based on daily temperature verification.

The ambient air temperature and air outlet temperature of each vertical concrete cask must be recorded upon placement in service. Thereafter, the temperatures shall be recorded on a daily basis to verify the continuing thermal performance of the system.

In the event of a decline in thermal performance, the heat removal system must be restored to acceptable operation. The user should perform a visual inspection of air inlet and outlets for evidence of blockage and verify that the inlet and outlet screens are whole, secure, and in place.

The user must also visually inspect the vertical concrete cask within 4 hours of any off-normal, accident of natural phenomena event, such as an earthquake.

An annual inspection of the vertical concrete cask exterior is required, to include:

- Visual inspection of concrete surfaces for chipping, spalling or other surface defects. Any defects larger than one inch in diameter (or width) and deeper than one inch shall be regrouted, according to the grout manufacturer's recommendations.

- Reapplication of corrosion-inhibiting (external) coatings on accessible surfaces, including concrete cask lifting lugs, if present.

9.2.2 Transfer Cask Maintenance

The transfer cask trunnions and shield door assemblies shall be visually inspected for gross damage and proper function prior to each use. Annually, the lifting trunnions, shield doors and shield door rails shall be either dye penetrant or magnetic particle examined, using the examination method appropriate to the material. The examination method shall be in accordance with Section V of the ASME Code. The acceptance criteria shall be in accordance with Section III, Subsection NF, Article NF-5350 or NF-5340 as appropriate to the examination method, as required by ANSI N14.6.

The annual examination may be omitted in periods of nonuse of the transfer cask, provided that the transfer cask examination is performed prior to the next use of the transfer cask.

Annually, the coating applied to the carbon steel surfaces of the transfer cask shall be inspected, and any chips, cracks or other defects in the coating shall be repaired.

11.2.12 Tip-Over of Vertical Concrete Cask

Tip-over of the Vertical Concrete Cask (cask) is a non-mechanistic, hypothetical accident condition that presents a bounding case for evaluation. There are no design basis accidents that result in the tip-over of the cask.

Functionally, the cask does not suffer significant adverse consequences due to this event. The concrete cask, canister, and basket maintain design basis shielding, geometry control of contents, and contents confinement performance requirements.

Results of the evaluation show that supplemental shielding will be necessary, following the tip-over and until the cask can be righted, because the bottom ends of the concrete cask and the canister have significantly less shielding than the sides and tops of these components.

11.2.12.1 Cause of Cask Tip-Over

A tip-over of the cask is possible in an earthquake that significantly exceeds the design basis described in Section 11.2.8. No other events related to design bases are expected to result in a tip-over of the cask.

11.2.12.2 Detection of Cask Tip-Over

The tipped-over configuration of the concrete cask will be obvious during site inspection following the initiating event.

11.2.12.3 Analysis of Cask Tip-Over

For a tip-over event to occur, the center of gravity of the concrete cask and loaded canister must be displaced beyond its outer radius, i.e., the point of rotation. When the center of gravity passes beyond the point of rotation, the potential energy of the cask and canister is converted to kinetic energy as the cask and canister rotate toward a horizontal orientation on the ISFSI pad. The subsequent motion of the cask is governed by the structural characteristics of the cask, the ISFSI pad and the underlying soil.

The objective of the evaluation of the response of the concrete cask in the tip-over event is to determine the maximum acceleration to be used in the structural evaluation of the loaded canister and basket (Section 11.2.12.4). The methodology to determine the concrete cask response follows the methodology contained in NUREG/CR-6608, "Summary and Evaluation of Low-Velocity Impact Tests of Solid Steel Billet Onto Concrete Pads" [38]. The LS-DYNA program is used in the evaluation. The validation of the analysis methodology is shown in Section 11.2.12.3.3.

The parameters of the ISFSI pad and foundation are:

Concrete thickness	36 inches maximum
Pad subsoil thickness	10 feet minimum
Specified concrete compressive strength	≤ 4,000 psi at 28 days
Concrete dry density (ρ)	$125 \leq \rho \leq 140$ lbs/ft^3
Soil in place density (ρ)	$100 \leq \rho \leq 120$ lbs/ft^3
Soil Modulus of Elasticity	≤ 60,000 psi (PWR) or ≤ 30,000 psi (BWR)

11.2.12.3.1 Analysis of Cask Tip-Over for PWR Configurations

The finite element model includes a half section of the concrete cask, the concrete ISFSI pad and soil subgrade, as shown:

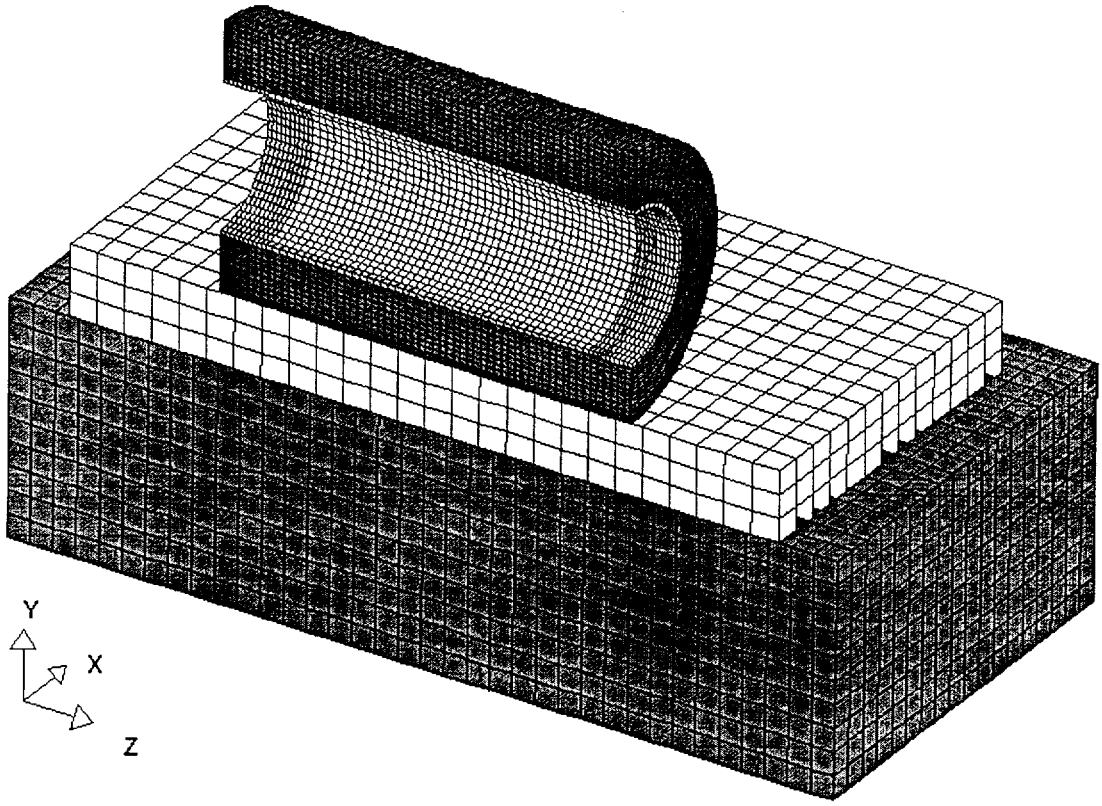

The concrete pad in the model corresponds to a pad 30-feet by 30-feet square and 3-feet thick, supporting one concrete cask in the center of the pad. The soil under the concrete pad is considered to be 35-feet by 35-feet square and 10-feet thick. Only one-half of the concrete cask, pad and soil configuration is modeled due to symmetry.

The concrete is represented as a homogeneous isotropic material. The concrete cask (outer shell) and the pad are modeled as material Type Number 16 in LS-DYNA. The values for concrete pad and soil properties provided below are typical values for the input to the LS-DYNA model:

Compressive Strength ($f_c^{'}$)	= 4,000 psi	
Density (ρ_c)	= 125 pcf	
Poisson's Ratio (ν_c)	= 0.22	(NUREG/CR-6608 [38])
Modulus of Elasticity (E_c)	$= 33\ \rho_c^{1.5}\ \sqrt{f_c^{'}}$ = 2.917E6 psi	(ACI 318-95)
Bulk Modulus (K_c)	$= \dfrac{E_c}{3(1-2\nu_c)}$ = 1.736E6 psi	(Blevins [19])

The material properties used in the model for the soil below the ISFSI pad are:

Density	= 120 pcf	
Poisson's Ratio (ν_s)	= 0.45	(NUREG/CR-6608)
Modulus of Elasticity	= 60,000 psi	

The concrete cask steel liner has the properties:

Density	= 0.284 lbs/in^3
Poisson's ratio	= 0.31
Modulus of elasticity	= 2.9E7 psi

To account for the weight of the shield plug, the loaded canister, and the concrete cask pedestal, effective densities are used for the elements in the first row of the steel liner in the model adjacent to the impact plane of symmetry. These densities represent the regions (6° in the circumferential direction) of the steel liner subjected to the weight of the shield plug, the loaded canister and the pedestal, during the side impact (tip-over) condition. The contact angle (6°) is determined based on the canister/basket analysis for the tip-over condition (Section 11.2.12.4).

Boundary Conditions and Initial Conditions

A friction coefficient of 0.25 is used at the interface between the steel liner and the concrete shell, between the concrete cask and the pad, and between the pad and the soil. For all the embedded faces (three side surfaces and the bottom surface) of the soil in the model, the displacements in the direction normal to the surface are restrained. The symmetry boundary conditions are applied for all nodes at the plane of symmetry.

The initial condition corresponds to the concrete cask in a horizontal position with an initial vertical velocity into the concrete pad. The pad and soil are initially at rest.

The distribution of initial velocity of the concrete cask is simulated by applying an angular velocity (ω) to the entire cask. The point of rotation is taken to be the lower edge of the base of the concrete cask. The angular velocity value is computed by considering energy conservation at the cask "center of gravity over corner" tip condition versus the side impact condition.

From energy conservation:

$$mgh = \frac{I\omega^2}{2}$$

where,

mg = total weight of the loaded concrete cask
= 292,401 lbs (PWR Class 1*)
= 303,317 lbs (PWR Class 2*)
= 308,432 lbs (PWR Class 3*)
* See Table 1.2-1 for the description of Class.

h = height change of the concrete cask center of gravity (L_{CG}) = $\sqrt{R^2 + \left(\frac{L_{CG}}{2}\right)^2} - R$

= 59.11 inches (PWR Class 1)
= 62.80 inches (PWR Class 2)
= 66.16 inches (PWR Class 3)

where,

L_{CG} = location of the center of gravity above the pad for the concrete cask
= 107.39 inches (PWR Class 1)
= 111.73 inches (PWR Class 2)
= 115.65 inches (PWR Class 3)

R = radius of the concrete cask = 68 inches

I = total mass moment of inertia of the concrete cask about the point of rotation
= 7,779,111 lbs-sec^2-inch (PWR Class 1)
= 8,610,059 lbs-sec^2-inch (PWR Class 2)
= 9,264,863 lbs-sec^2-inch (PWR Class 3)

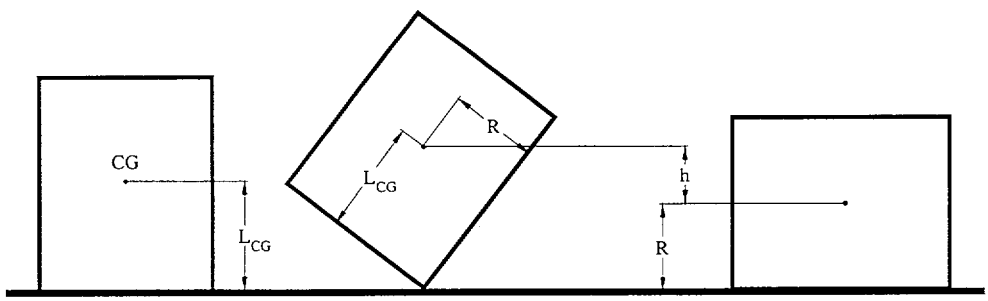

The mass moment of inertia for the concrete shell and the steel liner is calculated using the formula for a hollow right circular cylinder (Blevins).

$$I = \frac{m}{12}(3R_1^2 + 3R_2^2 + 4L^2) + md^2$$

where:

m = mass (lbs-sec^2/in)

R_1 and R_2 = the outer and inner radius of the cylinder (inch)

L = height of the cylinder (inch)

d = distance between the center of gravity and the point of rotation (inch)

For the mass of the shield plug, loaded canister and the pedestal, the formula for the moment of inertia for a solid cylinder is used:

$$I = \frac{m}{12}(3R^2 + 4L^2) + md^2$$

where,

m = mass of the cylinder (lbs-sec^2/in)
R = radius of the cylinder (inch)
L = height of the cylinder (inch)
d = distance between the two pivot axes (inch)

The angular velocity is given by $\omega = \sqrt{\frac{2mgh}{I}}$

= 1.493 radians/sec (PWR Class 1)
= 1.488 radians/sec (PWR Class 2)
= 1.484 radians/sec (PWR Class 3)

Filter Frequency

The accelerations are evaluated at the inner surface of the cask liner, which physically corresponds to the interface of the liner and the loaded canister nearest the plane of impact. Following the methodology contained in NUREG/CR-6608, the Butterworth filter is applied to the nodal accelerations. The filter frequency is based on the fundamental mode of the cask.

The fundamental natural frequency of a beam in transverse vibration due to flexure only is given by Blevins as:

$$f = \frac{\lambda^2}{2\pi}\sqrt{\frac{EI}{\rho A L^4}}$$

where:

$\lambda = 3.92660231$ for a pin-free beam

The frequencies of the concrete (f_c) and the steel liner (f_s) are computed as:

Area of concrete cask = $\pi\ \{(68)^2 - (39.75)^2\} = 9562.8\ \text{in}^2$

Moment of inertia of concrete cask = $\frac{\pi}{4}\{(68)^4 - (39.75)^4\} = 14{,}832{,}070\ \text{in}^4$

$f_c = 805819\ \frac{\lambda^2}{L^2}$

= 284 Hz (PWR Class 1)
= 261 Hz (PWR Class 2)
= 244 Hz (PWR Class 3)

The model includes a half section of the concrete cask, the concrete ISFSI pad and soil subgrade, as shown:

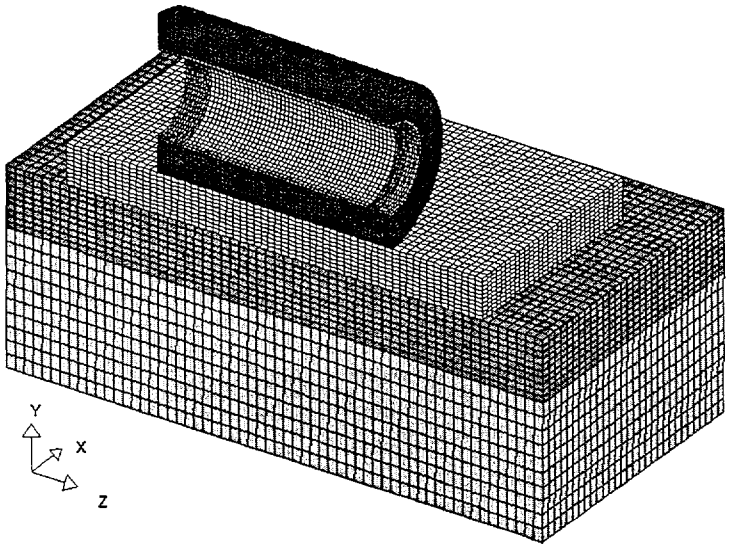

Concrete Pad Properties

Vertical concrete cask tip-over analyses are performed for ISFSI pad concrete compressive strengths of 3,000 and 4,000 psi. The Poisson's Ratio (ν_c) is 0.22. The concrete dry density is considered to be between 135 pcf and 145 pcf. To account for the weight of reinforcing bar in the pad, three values of Density (ρ) are used in the model:

ρ (lbs/ft^3)	E_c (psi)	K_c (psi)
140	2.994×10^6	1.782×10^6
145	3.156×10^6	1.879×10^6
152	3.387×10^6	2.016×10^6

The corresponding values of Modulus of Elasticity (E_c) and Bulk Modulus (K_c) are also provided, where:

Modulus of Elasticity (E_c) $= 33\rho_c^{1.5}\sqrt{f'_c}$ (ACI 318-95)

Bulk Modulus (K_c) $= \dfrac{E_c}{3(1-2\nu_c)}$ (Blevins [19])

Soil Properties

The soil properties used in the model are based on two soil layers. The vertical concrete cask tip-over analyses are performed for two different combinations of soil densities: (1) 4.5-foot thick upper layer density of 135 pcf (Modulus of Elasticity, E = 162,070 psi), with a 10-foot thick lower layer density of 127 pcf (E = 31,900 psi); and (2) 4.5-foot thick upper layer density of 130 pcf, with a 10-foot thick lower layer density of 127 pcf. The Poisson's Ratio (ν_s) of the soil is 0.45.

Summary of Design Basis ISFSI Pad Parameters

The ISFSI pads and foundation shall include the following characteristics as applicable to the end drop and tip-over analyses:

Concrete thickness	36 inches maximum
Pad subsoil thickness	4.5 feet maximum (upper layer)
	10 feet minimum (lower layer)
Specified concrete compressive strength	≤ 4,000 psi at 28 days
Soil in place density (ρ)	$\rho \leq 135$ lbs/ft^3 (upper layer)
	$\rho \leq 127$ lbs/ft^3 (lower layer)
Concrete dry density (ρ)	$135 \leq \rho \leq 145$ lbs/ft^3
Soil Modulus of Elasticity	≤ 150,000 psi (upper layer)
	≤ 30,000 psi (lower layer)

The concrete pad maximum thickness excludes the ISFSI pad footer. The compressive strength of the concrete is determined in accordance with Section 5.6 of ACI-318 with concrete acceptance in accordance with the same section. Steel reinforcement is used in the pad and footer. The soil modulus of elasticity is determined according to the test method described in ASTM D4719.

Vertical Concrete Cask Properties

The material properties used in the model for the Vertical Concrete Cask are the same as the properties used in the PWR models in Section 11.2.12.3. The tip-over impact is simulated by applying an initial angular velocity of 1.485 rad/sec (PWR Class 1) and 1.483 rad/sec (PWR Class 2), respectively to the entire cask. The angular velocity values are determined by the method used in Section 11.2.12 based on the weight of the loaded concrete cask with Maine Yankee fuel (285,513 pounds and 297,509 pounds for PWR Class 1 and PWR Class 2 respectively).

A cut-off frequency of 210 Hz (PWR Class 1) and 190 Hz (PWR Class 2) is applied to filter the analysis results from the LS-DYNA models and determine the peak accelerations. The resulting calculated accelerations on the canister at the location of the top support disk and of the top of the structural lid are tabulated for all of the analysis cases that were run. The maximum accelerations at the two key locations on the canister for the PWR Class 1 and Class 2 configurations are:

Component Location	Position Measured from the Bottom of the Concrete Cask (inches)		Acceleration (g)	
	Class 1	Class 2	Class 1	Class 2
Top Support Disk	176.7	185.2	32.3	34.2
Top of the Canister Structural Lid	197.9	207.0	35.3	37.6

The impact accelerations for the vertical concrete cask tip-over on the Maine Yankee ISFSI pad site are observed to be slightly higher than those reported in Section 11.2.12.3.1 for the design-basis ISFSI pad. Therefore, peak accelerations are calculated for the top support disk and are evaluated with respect to the analysis presented in Section 11.2.12.4.1.

To determine the effect of the rapid application of the inertia loading for the support disk, a dynamic load factor (DLF) is computed using the method presented in Section 11.2.12.4. The DLF is computed to be 1.07 and 1.02 for PWR Class 1 and Class 2, respectively. Applying the DLFs to the 32.3g and 34.2g results in peak accelerations of 34.6g and 34.9g for the top support disk PWR Class 1 and Class 2, respectively. The DLFs for the canister lids are considered to be unity since the lids have significant in-plane stiffness and are considered to be rigid. Additional sensitivity evaluations considering varying values of the ISFSI concrete pad density have been performed. The results of those evaluations demonstrate that the maximum acceleration for the canister and basket are below 40g. Therefore, the maximum acceleration for the canister and basket for the cask tipover accident on the Maine Yankee site ISFSI pad is bounded by the 40g used in Section 11.2.12.4.1 (Analysis of canister and basket for PWR configurations for tip-over event).

11.2.15.1.2 Parametric Study of Support Disk Evaluation for Maine Yankee Consolidated Fuel

A parametric study is performed to show that the PWR basket loaded with a Maine Yankee consolidated fuel lattice is bounded by the PWR basket design basis loading for a side impact condition. Only one consolidated fuel lattice, in a Maine Yankee Fuel Can, will be loaded in any single Transportable Storage Canister. However, Maine Yankee Fuel Cans holding other intact or damaged fuel can be loaded in the other three corner positions of the basket. (Maine Yankee Fuel

Cans may be loaded only in the four corner positions of the basket. See Figure 11.2.15.1.2-2 for corner positions. Therefore, the bounding case for Maine Yankee is the basket configuration with twenty (20) Maine Yankee fuel assemblies, three (3) fuel cans containing spent fuel, and one (1) fuel can containing consolidated fuel.

A two-dimensional ANSYS model is employed for the parametric study as shown in Figure 11.2.15.1.2-1. The load from a PWR fuel assembly is modeled as a pressure load at the inner surface of each support disk slot opening. The design basis fuel pressure loading (1g) is 12.26 psi. Based on the same design parameters (slot size = 9.272 in., disk thickness = 0.5 inch, and the number of disks = 30), the pressure load corresponding to a Maine Yankee standard CE 14 x 14 fuel assembly is 10.3 psi. The pressure load is 11.3 psi for a Maine Yankee fuel can holding an intact or damaged fuel assembly. For a Maine Yankee fuel can holding consolidated fuel the pressure load is 17.0 psi.

This study considers a 60g side impact condition for four different basket orientations: 0°, 18.22°, 26.28° and 45°, as shown in Figure 11.2.15.1.2-2. The 60g bounds the g-load for the PWR support disks (40g) due to the Vertical Concrete Cask tip-over accident as shown in Section 11.2.12.

A total of five cases are considered in the study. Inertial loads are applied to the support disk in all cases. The base case considers that all 24 fuel positions hold design basis PWR fuel assemblies. The other four cases (Cases 1 through 4) represent four possible load combinations for the placement of four Maine Yankee fuel cans in the corner positions, one of which holds consolidated fuel. The remaining twenty basket positions hold Maine Yankee standard 14 × 14 fuel assemblies. The basket loading positions are shown in Figure 11.2.15.1.2-2. The load combinations evaluated in the four Maine Yankee fuel can loading cases are:

Case	Basket Position 1	Basket Position 2	Basket Position 3	Basket Position 4
1	Consolidated	Damaged	Damaged	Damaged
2	Damaged	Consolidated	Damaged	Damaged
3	Damaged	Damaged	Damaged	Consolidated
4	Damaged	Damaged	Consolidated	Damaged

Table 11.2.15.1.2-1 provides a parametric comparison between the Base Case and the four cases evaluated, based on the maximum sectional stress in the support disk. As shown in the table, the maximum stress in the PWR basket support disk loaded with 20 standard fuel assemblies and four Maine Yankee fuel cans, including one holding consolidated fuel, is bounded by that for the support disk loaded with the design basis PWR fuel.

The maximum deflection of a fuel rod is at the top of the fuel assembly and the minimum deflection is at the bottom of the fuel assembly.

Assuming a 17x17 array (which envelopes the Maine Yankee 14x14 array), the maximum fuel rod deflection is:

(17-1) x (0.82-0.44) = 6.08 inches.

The deflection of a simply supported beam with a distributed load is given by the equation:

$$\Delta = \frac{5\omega l^4}{384EI} = \frac{5(g\omega)l^4}{384\,(EI_{total})} \qquad [52]$$

$$g = \frac{384\Delta(EI_{total})}{5\omega l^4}$$

The cladding bending stress is given by the equation:

$$S = \frac{Mc}{I} = \frac{\left(\left(g\omega l^2\right)/8\right)c}{I_{clad}}\left(\frac{EI_{clad}}{EI_{total}}\right)$$

Inserting the equation for 'g':

$$S = \frac{384\Delta c E_{clad}}{40\times l^2}$$

The bending stress in the fuel rod is:

$$S = \frac{384\times 6.08\times 0.22\times 10.47E6}{40(60)^2} = 37.4\text{ ksi}$$

where:

c = 0.22 inch distance from center of fuel rod to extreme outer fiber

$$I = \frac{EI_{total}}{E_{clad}} = \frac{22256}{10.47E6} = 0.0021 \text{in}^4$$

The maximum hoop stress due to the fuel rod internal pressure is determined to be 19.1 ksi (131.4 MPa per Tables 4.4.7-3 and 4.5.1.2-1). Therefore, the maximum axial stress is 9.6 ksi (one half of the hoop stress [53]).

The bearing stress between two fuel rods under a 60g load is:

$$S_{brg} = 0.591\sqrt{\frac{\omega E}{K_D}} = 0.591\sqrt{\frac{(0.000143 \times 386.4) \times 60 \times 10.47E6}{0.22}} = 7.4 \text{ ksi} \quad [53]$$

where:

$$K_D = \frac{D_1 D_2}{D_1 + D_2} = \frac{0.44 \times 0.44}{0.44 + 0.44} = 0.22$$

The total stress is:

$$S = 37.4 + 9.6 + 7.4 = 54.4 \text{ ksi}$$

The margin of safety for ultimate strength is:

$$MS = \frac{83.4}{54.4} - 1 = 0.53$$

where:

S_u = 83.4 ksi (575 Mpa) Irradiated Zircaloy-4 Ultimate Strength Allowable (Fig 3-2 [54])

The margin of safety for yield strength is:

$$MS = \frac{78.3}{54.4} - 1 = 0.44$$

where:

S_y = 78.3 ksi (540 Mpa) Irradiated Zircaloy-4 Yield Strength Allowable (Fig 3-2 [54])

The maximum bearing stress occurs between the bottom fuel rod and the fuel tube. The bearing stress is:

$$S_{brg} = 0.591\sqrt{\frac{17 \times 0.000143 \times 386.4 \times 60 \times 10.47E6}{0.44}} = 21.6 \text{ ksi}$$

The bending stress is negligible because the maximum deflection is equal to the spacing of the fuel rods established by the grid. Therefore the top fuel rod is bounding.

THIS PAGE INTENTIONALLY LEFT BLANK

HIGH BURNUP FUEL	A fuel assembly having a burnup between 45,000 and 50,000 MWD/MTU, which must be preferentially loaded in periphery positions of the basket. An intact HIGH BURNUP FUEL assembly in which no more than 1% of the fuel rods in the assembly have a peak cladding oxide thickness greater than 80 microns, and in which no more than 3% of the fuel rods in the assembly have a peak oxide layer thickness greater than 70 microns, as determined by measurement and statistical analysis, may be stored as INTACT FUEL. HIGH BURNUP FUEL assemblies not meeting the cladding oxide thickness criteria for INTACT FUEL or that have an oxide layer that has become detached or spalled from the cladding is stored as DAMAGED FUEL.
FUEL DEBRIS	An intact or a partial fuel rod or an individual intact or partial fuel pellet not contained in a fuel rod. Fuel debris is inserted into a 9 x 9 array of tubes in a lattice that has approximately the same dimensions as a standard fuel assembly.
CONSOLIDATED FUEL	A nonstandard fuel configuration in which the individual fuel rods from one or more fuel assemblies are placed in a single container or a lattice structure that is similar to a fuel assembly. CONSOLIDATED FUEL is stored in a MAINE YANKEE FUEL CAN.

(continued)

SITE SPECIFIC FUEL	Spent fuel configurations that are unique to a site or reactor due to the addition of other components or reconfiguration of the fuel assembly at the site. It includes fuel assemblies, which hold nonfuel-bearing components, such as control components or instrument and plug thimbles, or which are modified as required by expediency in reactor operations, research and development or testing. Modification may consist of individual fuel rod removal, fuel rod replacement of similar or dissimilar material or enrichment, the installation, removal or replacement of burnable poison rods, or containerizing damaged fuel. Site specific fuel includes irradiated fuel assemblies designed with variable enrichments and/or axial blankets, fuel that is consolidated and fuel that exceeds design basis fuel parameters.
MAINE YANKEE FUEL CAN	A specially designed stainless steel screened can sized to hold INTACT FUEL, CONSOLIDATED FUEL or DAMAGED FUEL. The screens preclude the release of gross particulate from the can into the canister cavity. The MAINE YANKEE FUEL CAN may be loaded only in a Class 1 canister.

Table 12B2-6 Maine Yankee Site Specific Fuel Population

Site Specific Spent Fuel Configuration	Est. Number of Assemblies[1,2]	Canister Loading Position[3]
Inserted Control Element Assembly (CEA)[4,5,6]	168	Any
Inserted In-Core Instrument (ICI) Thimble	138	Any
Consolidated Fuel	2	Corner[7,8,9]
Fuel Rod Replaced by Rod Enriched to 1.95 wt %	3	Any
Fuel Rod Replaced by Stainless Steel Rod or Zircaloy Rod	18	Any
Fuel Rods Removed	10	Corner
Variable Enrichment	72	Any
Variable Enrichment and Axial Blanket	68	Any
Burnable Poison Rod Replaced by Hollow Zircaloy Rod	80	Corner
Damaged Fuel[10,11]	12	Corner
Burnup between 45,000 and 50,000 MWD/MTU	90	Periphery[12]
MAINE YANKEE FUEL CAN	As Required	Corner[13]

1. The total number of fuel assemblies in inventory, including these site specific spent fuel configurations and standard spent fuel assemblies, is approximately 1,434.
2. The number of fuel assemblies in some categories may vary depending on future fuel inspections.
3. Standard fuel assemblies may be loaded in any position.
4. A fuel assembly with an inserted CEA must be loaded in a Class 2 canister.
5. A fuel assembly without an inserted CEA must not be loaded in a Class 2 canister.
6. CEAs may not be inserted in damaged fuel assemblies, consolidated fuel assemblies or assemblies with irradiated stainless steel replacement rods.
7. Basket corner positions are positions 3, 6, 19, and 22 in Figure 12B2-1. Corner positions are also periphery positions.
8. Only one Consolidated Fuel lattice may be loaded in any Transportable Storage Canister.
9. Consolidated Fuel must be loaded in a Maine Yankee fuel can.
10. All fuel classified as damaged must be placed in a Maine Yankee fuel can, including fuel assemblies with damaged fuel rods or poison rods inserted in guide tubes.
11. All spent fuel, including that held in a Maine Yankee fuel can, must conform to the loading limits presented in Tables 12B2-8 and 12B2-9 for cool time. The fuel maximum planar average enrichment should be used for variable enriched assemblies when determining minimum cool time.
12. Basket periphery positions are positions 1, 2, 3, 6, 7, 12, 13, 18, 19, 22, 23, and 24 in Figure 12B2-1. Periphery positions include the corner positions.
13. The MAINE YANKEE FUEL CAN may be loaded only in a Class 1 canister.

Table 12B2-7 Maine Yankee Site Specific Fuel Limits

A. Allowable Contents

1. Combustion Engineering 14 x 14 PWR INTACT FUEL ASSEMBLIES meeting the specifications presented in Tables 12B2-1, 12B2-2 and 12B2-4.
2. PWR INTACT FUEL ASSEMBLIES may contain inserted Control Component Assemblies (CEA) or inserted In-Core Instrument (ICI) Thimbles.
3. PWR INTACT FUEL ASSEMBLIES with fuel rods replaced with stainless steel or Zircaloy rods or with Uranium oxide rods nominally enriched up to 1.95 wt %.
4. PWR INTACT FUEL ASSEMBLIES with fuel rods having variable enrichments with a maximum fuel rod enrichment up to 4.21 wt % ^{235}U and that also have a maximum planar average enrichment up to 3.99 wt % ^{235}U.
5. PWR INTACT FUEL ASSEMBLIES with annular axial end blankets. The axial end blanket enrichment may be up to 2.6 wt % ^{235}U.
6. PWR INTACT FUEL ASSEMBLIES with solid filler rods or burnable poison rods occupying up to 16 of 176 fuel rod positions.
7. PWR INTACT FUEL ASSEMBLIES with one or more grid spacers missing or damaged such that the unsupported length of the fuel rods does not exceed 60 inches. End fitting damage including damaged or missing hold-down springs is allowed, as long as the assembly can be handled safely by normal means.

B. Allowable Contents requiring preferential loading based on shielding, criticality or thermal constraints. The preferential loading requirement for these fuel configurations is described in Table 12B2-6.

1. PWR INTACT FUEL ASSEMBLIES with up to 176 fuel rods missing from the fuel assembly lattice.
2. PWR INTACT FUEL ASSEMBLIES with a burnup between 45,000 and 50,000 MWD/MTU.
3. PWR INTACT FUEL ASSEMBLIES with a burnable poison rod replaced by a hollow Zircaloy rod.

Table 12B2-7 Maine Yankee Site Specific Fuel Limits (continued)

4. FUEL enclosed in a MAINE YANKEE FUEL CAN. The allowable contents of the MAINE YANKEE FUEL CAN are:

   a) A PWR INTACT FUEL ASSEMBLY.
   b) PWR fuel assemblies with up to two INTACT or DAMAGED FUEL rods inserted in each fuel assembly guide tube or with up to two burnable poison rods inserted in each guide tube. The rods inserted in the guide tubes can not be from a different fuel assembly. The maximum number of rods in the fuel assembly (fuel rods plus inserted rods, including burnable poison rods) is 176.
   c) A DAMAGED FUEL ASSEMBLY with up to 100% of the fuel rods classified as damaged and/or damaged or missing assembly hardware components.
   d) Individual INTACT or DAMAGED FUEL rods in a rod type structure, which may be a guide tube, to maintain configuration control.
   e) FUEL DEBRIS consisting of fuel rods with exposed fuel pellets or individual intact or partial fuel pellets not contained in fuel rods.
   f) CONSOLIDATED FUEL lattice structure with a 17 x 17 array formed by grids and top and bottom end fittings connected by four solid stainless steel rods. Maximum contents:
      - Up to 289 fuel rods
      - Lattice weight ≤ 2,100 pounds
   g) HIGH BURNUP FUEL (45,000 to 50,000 MWD/MTU)

C. The MAINE YANKEE FUEL CAN may be loaded only in a Class 1 CANISTER.

D. Unenriched fuel assemblies are not authorized for loading.

E. A canister preferentially loaded in accordance with Table 12B2-8 may only contain fuel assemblies selected from the same loading pattern.

Table 12B2-8 Loading Table for Maine Yankee CE 14 x 14 Fuel with No Non-Fuel Material – Required Cool Time in Years Before Assembly is Acceptable

Enrichment	Burnup ≤ 30 GWD/MTU - Minimum Cool Time [years] for[1]				
	Standard[2]	Pref (0.958i)	Pref (0.958p)	Pref (1.05i)	Pref (1.05p)
1.9 ≤ E < 2.1	5	5	5	5	5
2.1 ≤ E < 2.3	5	5	5	5	5
2.3 ≤ E < 2.5	5	5	5	5	5
2.5 ≤ E < 2.7	5	5	5	5	5
2.7 ≤ E < 2.9	5	5	5	5	5
2.9 ≤ E < 3.1	5	5	5	5	5
3.1 ≤ E < 3.3	5	5	5	5	5
3.3 ≤ E < 3.5	5	5	5	5	5
3.5 ≤ E < 3.7	5	5	5	5	5
3.7 ≤ E ≤ 4.2	5	5	5	5	5
Enrichment	30 < Burnup ≤ 35 GWD/MTU - Minimum Cool Time [years] for				
	Standard[2]	Pref (0.958i)	Pref (0.958p)	Pref (1.05i)	Pref (1.05p)
1.9 ≤ E < 2.1	5	5	5	5	5
2.1 ≤ E < 2.3	5	5	5	5	5
2.3 ≤ E < 2.5	5	5	5	5	5
2.5 ≤ E < 2.7	5	5	5	5	5
2.7 ≤ E < 2.9	5	5	5	5	5
2.9 ≤ E < 3.1	5	5	5	5	5
3.1 ≤ E < 3.3	5	5	5	5	5
3.3 ≤ E < 3.5	5	5	5	5	5
3.5 ≤ E < 3.7	5	5	5	5	5
3.7 ≤ E ≤ 4.2	5	5	5	5	5
Enrichment	35 < Burnup ≤ 40 GWD/MTU - Minimum Cool Time [years] for				
	Standard[2]	Pref (0.958i)	Pref (0.958p)	Pref (1.05i)	Pref (1.05p)
1.9 ≤ E < 2.1	7	7	6	15	5
2.1 ≤ E < 2.3	6	6	6	15	5
2.3 ≤ E < 2.5	6	6	5	14	5
2.5 ≤ E < 2.7	5	5	5	14	5
2.7 ≤ E < 2.9	5	5	5	14	5
2.9 ≤ E < 3.1	5	5	5	6	5
3.1 ≤ E < 3.3	5	5	5	6	5
3.3 ≤ E < 3.5	5	5	5	6	5
3.5 ≤ E < 3.7	5	5	5	6	5
3.7 ≤ E ≤ 4.2	5	5	5	6	5

1. Cool times for preferential loading of fuel assemblies with a decay heat of either 0.958 or 1.05 kw per assembly, loaded in either interior (i) or periphery (p) basket positions. All of the fuel assemblies in a canister must be selected using the same preferential loading pattern (Standard, 0.958 kW or 1.05 kW).
2. Fuel assemblies with cool times from 5 to 7 years must be preferentially loaded based on cool time, with fuel with the shortest cool time in the basket interior, in accordance with Section B2.1.2.