Wisconsin Electric
A WISCONSIN ENERGY COMPANY

Point Beach Nuclear Plant
6610 Nuclear Rd.
Two Rivers, WI 54241
Phone 920 755-2321

NPL 2000-0238

June 14, 2000

10 CFR 50.54(q)

Document Control Desk
U.S. NUCLEAR REGULATORY COMMISSION
Mail Station P1-137
Washington, DC 20555

Ladies/Gentlemen:

DOCKETS 50-266 & 50-301
EMERGENCY PLAN IMPLEMENTING PROCEDURE REVISIONS
POINT BEACH NUCLEAR PLANT, UNITS 1 & 2

Enclosed are copies of revised procedures to the Point Beach Nuclear Plant Emergency Plan Implementing Procedures. The revised procedures dated May 19, 2000, should be filed in your copy of the manual in accordance with the attached instructions.

Sincerely,

A. J. Cayia
Manager,
Site Services & Assessment

tat

Enclosures

cc: NRC Resident Inspector (w/o/e)

A045

NRR-037

The following changes have been made to the **EMERGENCY PLAN IMPLEMENTING PROCEDURES** Manual. Please remove the previous revision(s) and replace them ***IMMEDIATELY*** with the current revision(s) that are attached.

1. EPIP Index, Revision 66.
2. EPIP 8.4.1, Post-Accident Sampling and Analysis of Potentially High Activity Reactor Coolant, Revision 14.
3. EPIP 8.4.2, Post-Accident Sampling of Containment Atmosphere, Revision 9.
4. EPIP 8.4.3, Emergency Containment Sump "A" Sampling, Revision 6.
5. EPIP 10.3, Post-Accident Containment Hydrogen Reduction, Revision 5.

INDEX

PROCEDURE NUMBER	PROCEDURE TITLE	REVISION NUMBER		EFFECTIVE DATE	PERIODIC REVIEW DATE
EPIP 1.1	Course of Actions	35	C	01/26/00	11/30/99
EPIP 1.2	Emergency Classification	33	R	11/30/99	11/30/99
EPIP 1.3	Dose Assessment and Protective Action Recommendations	26	R	02/18/00	11/30/99
EPIP 2.1	Notifications - ERO, State & Counties, and NRC	19	R	02/18/00	11/30/99
EPIP 4.1	Technical Support Center (TSC) Activation and Evacuation	29	R	11/30/99	11/30/99
EPIP 4.2	Operations Support Center (OSC) Activation and Evacuation	14	R	11/30/99	11/30/99
EPIP 4.3	Emergency Operations Facility (EOF) Activation and Evacuation	22	R	11/30/99	11/30/99
EPIP 4.7	Offsite Radiation Protection Facility (OSRPF) Activation and Evacuation	0	R	11/30/99	11/30/99
EPIP 5.1	Personnel Emergency Dose Authorization	12	R	11/30/99	11/30/99
EPIP 5.2	Radioiodine Blocking and Thyroid Dose Accounting	11	R	11/30/99	11/30/99
EPIP 6.1	Assembly and Accountability, Release and Evacuation of Personnel	17	R	02/18/00	11/30/99
EPIP 7.3.1	Offsite Radiation Sampling and Survey	20	R	11/30/99	11/30/99
EPIP 7.3.2	Post-Accident Isokinetic Stack Sampling System	6	R	03/31/00	10/28/98
EPIP 7.3.7	Estimating Radioiodine Air Concentrations	4	R	03/31/00	10/28/98
EPIP 8.4.1	Post-Accident Sampling and Analysis of Potentially High Activity Reactor Coolant	14	C	05/19/00	10/28/98
EPIP 8.4.2	Post-Accident Sampling of Containment Atmosphere	9	C	05/19/00	10/28/98
EPIP 8.4.3	Emergency Containment Sump "A" Sampling	6	R	05/19/00	10/28/98
EPIP 10.1	Emergency Reentry	19	R	11/30/99	11/30/99
EPIP 10.2	Core Damage Estimation	18	R	11/30/99	11/30/99
EPIP 10.3	Post Accident Containment Hydrogen Reduction	5	R	05/19/00	10/28/98
EPIP 11.2	Medical Emergency	12	R	11/30/99	11/30/99

(T - Temporary Change)

NAMES AND
TELEPHONE NUMBERS
DELETED

C = Continuous Use
R = Reference Use
I = Information Use

INDEX

PROCEDURE NUMBER	PROCEDURE TITLE	REVISION NUMBER		EFFECTIVE DATE	PERIODIC REVIEW DATE
EPIP 12.1	Emergency Event De-Escalation, Termination, or Recovery Operations	7	R	11/30/99	11/30/99
EPIP 12.2	Recovery Implementation	12	R	11/30/99	11/30/99

(T - Temporary Change)

C = Continuous Use
R = Reference Use
I = Information Use

EPIP 8.4.1

POST-ACCIDENT SAMPLING AND ANALYSIS OF POTENTIALLY HIGH ACTIVITY REACTOR COOLANT

Wisconsin Electric Power Company

DOCUMENT TYPE: Technical

CLASSIFICATION: Safety Related

REVISION: 14

EFFECTIVE DATE: May 19, 2000

REVIEWER: Qualified Reviewer

APPROVAL AUTHORITY: Site Services & Assessment Manager

PROCEDURE OWNER (title): Emergency Preparedness Supervisor

OWNER GROUP: Emergency Preparedness

Verified Current Copy: _____ _____ _____
Signature Date Time

List pages used for Partial Performance

_____
_____
_____

Controlling Work Document Numbers

_____ _____
_____ _____
_____ _____

NAMES AND
TELEPHONE NUMBERS
DELETED

TABLE OF CONTENTS

SECTION	TITLE	PAGE
1.0	PURPOSE	4
2.0	PREREQUISITES	4
3.0	PRECAUTIONS AND LIMITATION	4
4.0	INITIAL CONDITIONS	5
5.0	PROCEDURE	6
5.1	Preliminary Evaluation	6
5.2	Preparation Of Sampling Equipment And Laboratory Setup	9
5.3	Approvals For Implementing Sampling And Analyses	13
5.4	Reactor Coolant Sampling	14
5.5	Collecting Gaseous Sample From Pressurized Sample Vessel	33
5.6	Analyzing Gaseous Sample	35
5.7	Collecting Liquid Sample From Sample Vessel	37
5.8	Analyzing Liquid Sample	38
5.9	Submittal Of Sampling/Analyses Documents	41
5.10	Sampling/Analysis Report And Continuation Of Procedure - Chemistry Supervision	41
5.11	Labeling Samples	41
5.12	Sample Storage	41
5.13	System Normal Valve Lineup	42
5.14	Re-Installation Of Shielded Sample Vessel	44
5.15	Preparation/Transfer Of Sample(S) To Off-Site Laboratory	47
5.16	Post-Analysis Documentation/Submittal	48
6.0	REFERENCES	49
7.0	BASES	49

TABLE OF CONTENTS

SECTION TITLE **PAGE**

ATTACHMENT A PRIMARY COOLANT HIGH-LEVEL SAMPLING FLOW DIAGRAM 50

ATTACHMENT B SETUP FOR TRANSFER OF SAMPLE FROM SAMPLE VESSEL 51

ATTACHMENT C PBNP REACTOR COOLANT POST-ACCIDENT SAMPLING AND ANALYSIS REPORT 52

Reason for performance: ☐ Drill ☐ Training ☐ Fuel Failure

1.0 PURPOSE

This procedure provides instructions for collecting, handling, and analyzing a (potentially high radioactivity) reactor coolant sample with due to fuel failure.

This procedure may also be used for training and drills or exercises. Chemistry supervision may exclude any section or step where performance may adversely affect operation of unit.

2.0 PREREQUISITES

2.1 Responsibilities

2.1.1 The Duty Shift Superintendent (DSS) (Operations Support Center Coordinator if TSC is activated) is responsible for the management of the reactor coolant sample collection and analysis.

2.1.2 Radiation Protection (RP) Supervision (Rad/Chem Coordinator if TSC is activated) is responsible for the radiological monitoring controls.

2.1.3 Chemistry Supervision (Chemistry Leader is OSC is activated) is responsible for sample collection and analysis.

2.2 Equipment

2.2.1 Emergency Preparedness Radiation Protection Equipment maintained in OSC.

2.2.2 Refer to Step 5.2 for Chemistry equipment.

3.0 PRECAUTIONS AND LIMITATIONS

3.1 During performance of radiological sampling activities, personnel may be subjected to radiological hazards including high radiation, contamination, and airborne radioactivity.

3.2 Personnel shall wear prescribed protective clothing, dosimetry devices, and other protective equipment, as required by the applicable Radiation Work Permit (RWP) or Re-entry Permit, when performing radiological sampling.

3.3 Improper handling of radioactive material can result in personnel contamination, radioactive material uptake, and unplanned personnel exposure.

3.4 DSS approval is required for connecting DI-148 (DI Header To High Radiation Sample System) to the DI (deionized) water manifold, and Unit Control Operator (Unit CO) shall be informed prior to initiating DI flush because flush will dilute reactor coolant and affect reactivity. Unit CO shall also be notified upon completion of flush.

3.5 Reactor Coolant system samples shall be taken within three (3) hours from the time a decision is made to dispatch a sample team.

NOTE: SC-956C and SC-990 (Step 3.6) may be required for containment isolation should SC-955 or SC-959 (Step 3.7) fail to shut.

3.6 DSS approval is required for opening the following valves when they are being used for containment isolation (i.e., only one other valve operable upstream):

3.6.1 SC-946, HX-14C RC Hot Leg Sample HX DI Flush

3.6.2 SC-956C, HX-14C RC Hot Leg Sample HX Inlet

3.6.3 SC-990, HX-14C RC Hot Leg Sample HX Inlet RHR

3.7 Unit CO shall be notified immediately should the following containment boundary valves fail to SHUT within 15 seconds of moving valve switch to CLOSE position:

3.7.1 SC-955, RC Hot Leg Sample Isolation

3.7.2 SC-959, RHR Loop Sample Isolation

3.8 Sample vessel shall be re-installed with shielding upon completing training, drill, or exercise.

4.0 INITIAL CONDITIONS

Indications of fuel failure.

INITIALS

5.0 PROCEDURE

5.1 Preliminary Evaluation

NOTE: This section shall be completed prior to entering the Auxiliary Building OR Sample Room to obtain Reactor Coolant samples under emergency conditions.

NOTE: Equipment collection and laboratory setup (Section 5.2) may be performed concurrently with this section.

5.1.1 Indications of Possible Fuel Damage

NOTE: Fuel damage may be the cause when any of the conditions in Steps 5.11.a - 5.11.h exist.

Circle step number(s) and initial to indicate existing condition(s), and enter N/A for conditions that do **NOT** exist:

a. Letdown Valve Gallery Monitor (RE-116) reading is unusually high **OR** offscale high. (Containment isolation may invalidate readings.) _____

b. Post Accident Sample Line Monitor, 1(2)RE-109 reading is unusually high **OR** offscale high. (Containment isolation may invalidate readings.) _____

c. Containment Air Particulate Monitor, 1(2)RE-211 and Containment Noble Gas Monitor, 1(2)RE-212 readings are unusually high **OR** offscale high. (RE-211/212 readings may be invalid if containment is isolated.) _____

d. Containment Low-Range Monitor, 1(2)RE-102, and Seal Table Monitor, 1(2)RE-107 readings are unusually high **OR** offscale high. _____

e. Auxiliary Building Vent Stack Monitor, RE-214 is indicating a significant increase due to Auxiliary Building airborne activity from the Letdown and Charging Pump areas. _____

INITIALS

f. Charging Pump Room Low Range Monitor, 1(2)RE-104 is indicating increased radioactivity in the Auxiliary Building. _____

g. Sample Room Low Range Monitor, 1(2)RE-106 is indicating increased radioactivity in the Sample Room and Background Monitor, 1(2)RE-219B is indicating increased radioactivity outside Sample Room. _____

h. Chem Lab Low Range Monitor, RE-103 is indicating increased radioactivity in laboratory (prior to sample analysis). _____

5.1.2 Verification of Component Cooling and Instrument Air

NOTE: This section (5.1.2) is NOT required for training.

NOTE: Sample cannot be obtained without component cooling to Sample Room heat exchangers and instrument air for operating air operated sample valves.

Contact DSS and confirm following (circle as appropriate):

a. Component Cooling In-Service in affected unit (Yes No) _____

b. Instrument Air In-Service in affected unit (Yes No) _____

5.1.3 Pre-Job Briefing and Evaluation of Potential Radiological Hazards for Sampling and Analysis Functions

Attend pre-job briefing which includes Chemistry supervision, Radiation Protection (RP) supervision (or designee), and affected Chemistry technicians to evaluate the following, based on Radiation Work Permit(s) **OR** reentry permit(s), radiological survey/monitor data, Calculation 98-0058 (Post-LOCA Reactor Coolant Sample System Dose Rate), **AND** Attachments A-B.

INITIALS

NOTE: RP determines radiological hazards in access and sampling/analysis areas, dosimetry/respiratory requirements, stay times, and dose estimates, based on radiation dose rate (area and contact), estimated time required for each task, and shielding/distance(s) indicated by chemistry.

a. Chemistry supervision:

1. Provide input as requested by RP and Chemistry Technician(s) regarding sampling and analysis functions. _____

2. Determine which valve/instrument/component position verification(s) **OR** other function(s) in procedure may be omitted as a means for minimizing radiation exposure, based on knowledge of pre-event lineups, laboratory readiness, historical data, value gained/lost by performing/**NOT** performing, etc., i.e.: _____

   (a) Omit section(s) **NOT** to be performed (e.g., If radiation dose from pre-sample flush may negate any reduction in over-all dose, then section should be omitted).

   (b) Omit steps **NOT** to be performed (e.g., sampling equipment Steps 5.2.1.b and 5.2.1.c may already be in location for use, **AND** Steps 5.4.2.i through 5.4.2.k should already be in desired position.

   (c) Choose flow path to be used, i.e., if SC-955/966C **OR** SC-959/990 used, omit steps/sub-steps for flow path **NOT** used.

3. Ensure N/A entered and initialed for any section/steps/data lines omitted **AND** affected selection boxes are checked. _____

INITIALS

4. Provide other suggestions for reducing exposure time and completing procedure in timely manner, as applicable. _____

5. Assign sampling/analysis functions among chemistry personnel, as necessary to maintain exposure ALARA. _____

b. Chemistry Technician(s): Provide input as requested by Chemistry supervision **OR** RP, **AND** ask questions, as necessary to ensure all concerns are adequately addressed. _____

5.2 Preparation Of Sampling Equipment And Laboratory Setup

5.2.1 Sampling Equipment List

a. Obtain the following equipment and supplies:

1. Two-way radio and spare battery _____

2. Waste container for collecting possible drips from High Rad Sampling Station (HRSS) sample vessel fittings _____

3. Polyethylene bags for trash, and large bag(s) to cover sample vessel during transport _____

4. Paper towels to control/contain potential leaks or spray during connection/disconnection of sample vessel _____

NOTE: Items in Step 5.2.1.b AND 5.2.1.c are normally maintained for immediate use at locations specified in each step. Chemistry supervision may enter N/A for these steps when items are known to be positioned as indicated.

b. Verify following equipment is positioned adjacent to Unit 1 Sample Room (normal location) **AND** ready for use:

1. Sample cart designated for transport of sample vessel _____

2. Wrenches, 5/8" and 11/16", open-end (or adjustable) for connecting and disconnecting sample vessel _____

INITIALS

3. Remote valve turning tool _____

4. Syringe for evacuating liquid from sample vessel fittings _____

5. Shielded waste bottle _____

c. Verify following are positioned for use in the Primary Sample Hood:

1. Equipment detailed in Attachment B, excluding sample vessel _____

2. Remote handling tools located in cabinet below the hood _____

NOTE: Preparation of Laboratory Equipment can be completed in any logical sequence as deemed applicable by the performers.

5.2.2 Laboratory (Analysis) Equipment

a. Gas Chromatograph (G.C.) _____

b. Ion Chromatograph (I.C.) _____

c. Multichannel Analyzer (MCA) _____

d. pH/mv meters (120v AC or battery powered) and pH probe _____

e. Magnetic stirrers; (120v AC, battery, or water/air powered), one 50 ml polyethylene beaker, and a 50 ml beaker _____

f. Piston burette; manual or auto _____

g. Automatic pipets; continuously adjustable through 5 ml, or equivalent _____

h. One, 1.0 liter sidearm flask with correctly sized solid stopper and rubber septum over sidearm _____

i. Gas Collection Vessel, glass _____

INITIALS

j. Gas syringe, pressure-lock, or equivalent _____

k. Beaker, 50 ml _____

l. Mini-lab analyzer, as required by Chemistry supervision _____

m. Lead brick barricade (wall) of sufficient size to temporarily shield sample in analytical hood _____

5.2.3 Reagents, Standards, and Bottled Gases

a. NaOH, 0.1N for boron (May be obtained from normal boron analysis reagents.) _____

b. Mannitol for boron analysis _____

c. Boron standard, appropriate for expected boron concentration _____

d. Calibration gases for G.C. _____

e. Carrier and valve gas (if applicable) _____

NOTE: Preliminary Equipment checks can be completed in any logical sequence as deemed applicable by the performers.

5.2.4 Preliminary Equipment Check and Preparation

NOTE: Chemistry supervision selects instruments to use. (Step 5.2.4.a)

a. Verify current calibration on following instruments and startup instruments (if necessary), in accordance with applicable CAMP procedures, and as directed by Chemistry supervision:

1. G.C. _____

2. I.C. _____

3. MCA _____

INITIALS

b. Verify daily QA check performed and results are within limits specified in applicable CAMP procedure for instrument selected (Step 5.2.4.b) and analysis parameters listed below:

1. G.C. for hydrogen analysis and hydrogen result _____

2. I.C. for chloride analysis and chloride result _____

3. MCA for noble gas and iodine analyses and results _____

NOTE: In the event of loss of AC power to laboratory, a battery-powered pH meter and a battery, air, OR water-powered magnetic stirrer may be used.

c. Standardize pH meter and verify mid-point check within ± 0.1 su. _____

d. Check and prime piston burette with 0.1N NaOH solution. _____

e. Perform QA check on boron standard and verify result within ± 1 ppm for 10 - 19 ppm standard **OR** ± 1% or ± 1 ppm (whichever is greater) for 20 - 2000 ppm standard. _____

f. Organize equipment behind lead brick barricade to allow view of operations with aid of mirror. _____

g. Set up Gas Collection Vessel by verifying following:

1. New septum installed **AND** Valve 2 OPEN

2. Vacuum line attached to vessel at Valve 1

3. Valve 1 OPEN **AND** valve 3 SHUT

4. Outlet line to liquid sample vessel capped **AND** vacuum established

5. Valve 1 SHUT **AND** vacuum stable _____

INITIALS

6. **IF** vacuum decreases,
THEN verify following:

(a) Valves SHUT
(b) Rubber septum replaced
(c) Fittings are tight
(d) Vacuum re-applied **AND**
Steps 5.2.4.g.3 - 5.2.4.g.5 repeated
until vacuum stable

_____

h. Rinse sample vessel drain tube, receiving beaker, and tips of transfer pipets with DI water to remove any chloride contamination.

_____

i. Perform two-way radio check with Control Room **AND** Operation Support Center (OSC), as applicable.

_____

j. **IF** DI water flush desired by Chemistry supervision, **THEN** obtain DSS permission for connecting DI water to DI water manifold.

_____

5.3 Approvals For Implementing Sampling And Analyses

NOTE: Steps 5.3.1 and 5.3.2 are NOT required for training.

Obtain verbal approval to implement sampling and analyses from:

5.3.1 Duty Shift Superintendent (Operations Support Center Coordinator if TSC is activated)

_____

5.3.2 Duty and Call Radiation Protection Supervisor (Rad/Chem Coordinator if TSC is activated)

_____

INITIALS

5.4 Reactor Coolant Sampling

NOTE: **The terms, demineralized and deionized (DI) water are both used in CHAMP component names for the same water. The term DI is used in this procedure except when demineralized is used in the CHAMP name.**

NOTE: **For drills and training, DI water flush and sample dilutions are NOT to be performed unless otherwise directed by Chemistry supervision.**

CAUTION

Sampling (fuel failure only) shall NOT begin until preliminary evaluation is completed and all approvals for implementation have been received.

CAUTION

Performance of a DI water flush will dilute the reactor coolant, and affect reactivity.

5.4.1 Preparation for Collecting Pressurized Sample

a. Contact Unit CO **AND** perform following:

1. Inform Unit CO of following, as applicable: _____

(a) PASS sampling (including installation of shielded sample vessel, as applicable) to begin.

(b) RE-109, Post Accident Sample Line Monitor to be removed from service while sampling

(c) SC-955, RC Hot Leg Sample Isolation valve will be SHUT.

2. Have Unit CO SHUT SC- 966C, RC Hot Leg Sample (isolation valve), as applicable. _____

INITIALS

b. Proceed with sample cart (loaded with sampling equipment) to HRSS outside appropriate Sample Room, 26′ elevation, Primary Auxiliary Building (PAB). _____

c. Verify SC-955 SHUT. _____

d. **IF** shielded sample vessel installed, **THEN** enter N/A for Steps 5.4.1.e **AND** GO TO Step 5.4.1.f _____

e. **IF** shielded sample vessel **NOT** installed, **THEN** perform following:

1. Place a waste container under sample vessel fittings to collect potential drips. _____

CAUTION

System pressure shall be relieved by opening valves in Step 5.4.1.e.2 before loosening sample vessel fittings.

2. OPEN following valves to relieve possible pressure in system.

ID	Name	Initials
SC-939	Z-5E High Rad Sample Vessel Inlet	
SC-940	Z-5E High Rad Sample Vessel Bypass	
SC-941	Z-5E High Rad Sample Vessel Outlet	

3. Verify following valves are SHUT:

ID	Name	Initials
SC-939	Z-5E High Rad Sample Vessel Inlet	
SC-940	Z-5E High Rad Sample Vessel Bypass	
SC-941	Z-5E High Rad Sample Vessel Outlet	

INITIALS

CAUTION

Paper towel shall be used to contain potential spray when performing Step 5.4.1.e.4.

4. Disconnect (carefully) sample vessel fittings using care to contain potential spray and prevent possible contamination. _____

5. Allow any liquid in line to drain into waste container. _____

6. Install shielded sample vessel on HRSS sample vessel fittings. _____

f. Perform following:

1. Verify sample vessel fittings are tight. _____

2. Verify following valves are SHUT:

ID	Name	Initials
SC-939	Z-5E High Rad Sample Vessel Inlet	
SC-940	Z-5E High Rad Sample Vessel Bypass	
SC-941	Z-5E High Rad Sample Vessel Outlet	
8A	Sample Vessel Valve	
8B	Sample Vessel Valve	
9A	Sample Vessel Valve	
9B	Sample Vessel Valve	

INITIALS

NOTE: N/A Section 5.4.2 if NOT performing a presample flush.

5.4.2 Pre-Sampling Flush

a. Connect DI water line quick-connect from valve DI-148 to the DI water manifold, **AND** verify quick-connect is unlocked. _____

b. Verify following valves are SHUT:

ID	Name	Initials
DI-148	DI Header To High Radiation Sample System	
SC-946	HX-14C RC Hot Leg Sample HX DI Flush	
SC-947	Z-5E High Rad Sample Vessel DI Flush Inlet	
SC-948	Z-5E High Rad Sample Vessel DI Flush Outlet	

NOTE: Next step is performed only to determine if pump will energize. Pump is NOT to be left on after performance.

c. **IF** P-166, Demineralized Water Flush Pump to be used, **THEN** perform following:

1. Verify motor starter switch for P-166, is unlocked. _____

2. Check that P-166 is energized by momentarily switching pump ON, then OFF. _____

d. **IF** P-166 did **NOT** energize, **THEN** have Unit CO verify Breaker No. 4 on Panel 1Y-114/2Y-113 (U1/2 Rod Drive Room) CLOSED, then repeat Step 5.4.2.c. _____

e. **IF** P-166 still did **NOT** energize, **THEN** discontinue effort to start pump. (DI water header pressure to be increased at later step.) _____

f. **IF** N/A entered by Chemistry supervision for **all** Steps 5.4.2.i through 5.4.2.k, **THEN** GO TO note/caution preceding Step 5.4.2.l. _____

INITIALS

g. **IF** Chemistry supervision did **NOT** omit **all** Sample Room valve position verifications,
THEN review Steps 5.4.2.i through 5.4.2.k for familiarization with valves needing verification. _____

h. Obtain DSS approval to open SC-946/SC-956C, as applicable **AND** enter Sample Room. _____

NOTE: Sign-offs (below) may be initialed after all positions verified.

i. Verify valves are positioned as indicated in position column, as follows:

ID	Name	Position	Initials
SC-961C	HX-14C RC Hot Leg Sample HX Outlet	SHUT	
SC-964C	RC Hot Leg Sample Throttle	SHUT	
SC-965C	Z-5C RC Hot Leg Sample Vessel Bypass	SHUT	
SC-971	RC Hot Leg Grab Sample	SHUT	
SC-968	Z-5C Sample Pressure Vessel Common Outlet	SHUT	
SC-938A	RE-109 Failed Fuel Monitor Inlet	SHUT	
SC-938B	RE-109 Failed Fuel Monitor Outlet	SHUT	
SC-938C	RE-109 Failed Fuel Monitor Flow Throttle	SHUT	
SC-938	HX-14C RC Hot Leg HX Out To High Rad Sample System	OPEN	
SC-969A	FI-903 Flow Indicator Purge Line To T-4 VCT Isolation	OPEN	
SC-956C	HX-14C RC Hot Leg Sample HX Inlet	OPEN	

j. Verify component cooling flow to Sample Room Heat Exchangers by viewing FI-603, Sample System HX Shell Side Outlet Flow Indicator on Sample Panel. _____

CAUTION

SC-990 shall NOT be used for drill OR training.

k. Verify SC-990, HX-14C RC Hot Leg Sample HX Inlet RHR Sample OPEN, then exit to low radiation area. _____

INITIALS

CAUTION

Unit CO shall be informed prior to initiating DI flush because this evolution can affect reactivity.

NOTE: Steps 5.4.2.l - 5.4.2.x required only if DI water flush is performed, as directed by Chemistry supervision.

l. Verify following valves OPEN:

ID	Initials
SC-939	
SC-940	
SC-941	
DI-144	

NOTE: DSS approval required to open SC-946 following containment isolation if SC-966C fails to shut.

m. OPEN following valves:

ID	Initials
DI-140	
DI-145	
DI-148	
SC-946	

INITIALS

NOTE: To minimize radiation dose during an emergency event, Chemistry supervision may have omitted Step 5.4.2.n

n. **IF** N/A **NOT** entered Chemistry supervision for Steps 5.4.2.n.1 - 5.4.2.n.2,
THEN check DI water system lineup for applicable unit, as follows:

1. Unit 1: Verify DI flow by momentarily OPENING, checking flow, then SHUTTING DI water valve in Primary Sample Hood. _____

2. Unit 2: Verify OPEN DI water valve (DI-57) located on east wall of Sample Room. _____

o. **IF** P-166 to be used,
THEN perform following: _____

1. Verify valve DI-142 SHUT. _____

2. Verify valve DI-143 OPEN. _____

3. Turn pump switch ON **AND** record time: _____

   Time: _____

4. Exit to low radiation area. _____

p. **IF** P-166 would **NOT** energize at Step 5.4.2.o,
THEN perform following:

1. Verify OPEN DI-142, P-166 Flush Pump Bypass. _____

2. Verify SHUT DI-143. _____

3. Record system pressure as indicated on PI-999: _____

   _____ psi

4. Exit to low radiation area. _____

INITIALS

5. **IF** system pressure (Step 5.4.2.p.3) is less than 80 psi, **THEN** contact Unit CO, **AND** request that DI water header pressure be maximized and the time pressure maximized be provided. _____

6. Record time pressure maximized: _____

   Time: _____

q. Time flush, as follows:

   1. **IF** flushed using P-166, **THEN** wait approximately 2 minutes. _____

   2. **IF** flushed by maximized DI water header pressure, **THEN** wait approximately 15 minutes after header pressure maximized. _____

r. Return to HRSS **AND** measure radiation levels in Sample Room **OR** general area, as applicable. _____

s. Record data below **AND** exit to low radiation area: _____

   1. Time: _____

   2. Radiation Level: _____ mR/Hr;
      Location:_____

   3. PI-999 pressure indication: _____ psi

t. Notify Chemistry supervision of radiation dose rate, **AND** wait for instructions on system flush. _____

u. **IF** Chemistry **OR** RP supervision directs discontinuation of flush,
   THEN N/A Step 5.4.2.v **AND** GO TO Step 5.4.2.w. _____

INITIALS

v. **IF** Chemistry **OR** RP supervision directs continuation of flush,
THEN repeat Steps 5.4.2.q - 5.4.2.t, **AND** record data in Table A (below) until Chemistry **OR** RP supervision directs discontinuation of flush, as applicable: _____

Table A

Flush #	PI-999 psig	Time	mR/hr After Flush
2			
3			
4			

w. Secure flush according to following:

1. **IF** flushed by P-166,
THEN turn P-166 OFF **AND** record time flush STOPPED, **AND** total flush time: _____

   Time: _____ Total Flush Time: _____ minutes

2. **IF** flushed by maximized DI water header pressure,
THEN SHUT DI-142, **AND** record time flush STOPPED, **AND** total flush time: _____

   Time: _____ Total Flush Time: _____ minutes

3. SHUT SC-946 **AND** SC-940. _____

x. Notify Unit CO DI water flush completed. _____

INITIALS

5.4.3 Pressurized Sample Collection

CAUTION

Valve SC-959 shall NOT be opened for drill OR training.

a. Contact Control Room **AND** perform following:

1. Obtain DSS permission to OPEN one of following **AND** check block to indicate valve to be opened: _____

☐ SC-955, RC Hot Leg Sample Isolation
☐ SC-959, RHR Loop Sample Isolation

NOTE: Cycling of Containment Isolation valves may be necessary to reset isolation signal to allow sampling.

2. Have Unit CO reset containment isolation signal on valve selected to enable sampling, **OR** N/A if **NOT** applicable. _____

NOTE: Valve positions are indicated on switch panels by green AND red lights, as follows:
- **Green light (only) lit = SHUT**
- **Red light (only) lit = OPEN**
- **Both lights lit = Intermediate Position**

b. OPEN isolation valve selected (Step 5.4.3.a.1), using local control switch on switch panel outside Sample Room, **AND** check block for valve OPENED: _____

☐ SC-955
☐ SC-959

INITIALS

c. **IF** valve selected (Step 5.4.3.a.1) will **NOT** open because containment isolation signal **NOT** reset, **THEN** perform following: _____

1. Have Unit CO verify containment isolation signal for SC-955 **OR** SC-959 (as applicable) has been reset. _____

2. Verify SC-955 **OR** SC-959, as applicable SHUT by placing applicable control switch on panel outside of Sample Room in CLOSE position, **AND** check block to indicate valve shut. _____

   ☐ SC-955
   ☐ SC-959

3. Verify SC-955 **OR** SC-959, as applicable OPEN by placing applicable control switch in OPEN position, **AND** check block to indicate valve opened. _____

   ☐ SC-955
   ☐ SC-959

d. Verify valve positions as indicated in position column, as follows:

ID	Name	Position	Initials
SC-961C	HX-14C RC Hot Leg Sample HX Outlet	SHUT	
SC-964C	RC Hot Leg Sample Throttle	SHUT	
SC-965C	Z-5C Hot Leg Sample Vessel Bypass	SHUT	
SC-971	RC Hot Leg Grab Sample	SHUT	
SC-968	Z-5C Sample Pressure Vessel Common Outlet	SHUT	
SC-938A	RE-109 Failed Fuel Monitor Inlet	SHUT	
SC-938B	RE-109 Failed Fuel Monitor Outlet	SHUT	
SC-938C	RE-109 Failed Fuel Monitor Flow Throttle	SHUT	
SC-938	HX-14C RC Hot Leg Hx out to High Rad Sample System	OPEN	
SC-969A	FI-903 Flow Indicator Purge Line to T-4 VCT Isolation	OPEN	
SC-956C	HX-14C RC Hot Leg Sample Hx Inlet	OPEN	

INITIALS

e. Verify following valves OPEN:

ID	Name	Initials
9B	Sample Vessel Valve	
9A	Sample Vessel Valve	
8A	Sample Vessel Valve	
8B	Sample Vessel Valve	

CAUTION

For drill OR training exercises only. SC-941 shall be cracked OPEN slightly AND flow maintained at 0.5 - 1.0 gpm by THROTTLING SC-941 to minimize N-16 gamma.

NOTE: FI-903 (located inside Sample Room) can be used as aid for setting flow rate if dose rates permit.

NOTE: Observe pressure indication PI-995 when throttling SC-941 or opening SC-966C.

f. OPEN SC-939 **AND** throttle SC-941. _____

g. **IF** sample being taken off Hot Leg (i.e., only SC-955 being used)
THEN have Unit CO OPEN SC-966C. _____

h. Verify sample flow by confirming one **OR** both of following indications, as desired: _____

1. Increase in radiation level at Sample Vessel

2. Pressure increase/decrease indication on PI-995 when SHUTTING/OPENING Valve SC-941 _____

i. Exit to low radiation area. _____

INITIALS

NOTE: Next step should be performed immediately before returning to HRSS to obtain sample.

j. Contact Unit CO **AND** obtain/record following pressure indications, as applicable: _____

(RCS): ____ psig **OR** RHR: _____ psig VCT _____psig

k. **WHEN** sample has recirculated for 15 minutes, **THEN** return to HRSS to collect sample. _____

l. **IF** reading on PI-995 **NOT** between RCS **AND** VCT pressure,
THEN exit to low radiation area, notify Chemistry supervision, **AND** wait for instructions. _____

NOTE: Use the remote valve operating tool only as needed to reduce dose.

m. SHUT following valves IN EXACT ORDER listed.

ID	Name	Initials
9B	Sample Vessel Valve	
9A	Sample Vessel Valve	
8B	Sample Vessel Valve	
8A	Sample Vessel Valve	

n. Record sample time, **AND** check that PI-995 indicates less than 100 psig **AND** is **NOT** increasing: _____

Sample time: _____

o. **IF** PI-995 equal to or greater than 100 psig, **OR** is increasing,
THEN notify Chemistry supervision, **AND** wait for instructions. _____

INITIALS

NOTE: Sample vessel is NOT to be disconnected until sample flow is secured and DI flush (if being performed) is completed.

NOTE: Valve positions are indicated on switch panels by green and red lights, as follows:
- **Green light (only) lit = SHUT**
- **Red light (only) lit = OPEN**
- **Both lights lit = Intermediate Position**

p. SHUT isolation valve opened at Step 5.4.3.b **OR** 5.4.3.c.3, as applicable, using local control switch on switch panel outside Sample Room, **AND** check block for valve SHUT. _____

☐ SC-955
☐ SC-959

q. **IF** valve SC-955 **OR** SC-959 (as applicable) did **NOT** SHUT (green light on panel lit) within 15 seconds, **THEN** notify Unit CO. _____

r. **IF** sample being taken off Hot Leg (i.e., only SC-955 being used)
THEN have Unit CO SHUT SC-966C. _____

s. **IF** DI flush **NOT** to be performed,
THEN perform following:

1. Verify following valves SHUT:

ID	Initials
SC-939	
SC-940	
SC-941	

2. Enter N/A for Steps 5.4.4.a - 5.4.4.p, **AND** GO TO Step 5.4.4.q. _____

INITIALS

NOTE: Post-sampling flush to be performed only as directed by Chemistry supervision, OR N/A entered for sign-offs when NOT performed.

5.4.4 Post-Sampling Flush

a. Verify following valves OPEN:

ID	Initials
SC-940	
SC-941	
DI-144	

CAUTION

Unit CO shall be informed prior to initiating DI flush because this evolution can affect reactivity.

NOTE: DSS approval required to open SC-946 following containment isolation if SC-966C fails to shut.

b. Verify following valves OPEN:

ID	Initials
DI-140	
DI-145	
DI-148	
SC-947	
SC-948	

c. **IF** P-166 to be used,
THEN perform following:

1. Verify valve DI-142 SHUT. _____

2. Verify valve DI-143 OPEN. _____

INITIALS

3. Turn pump switch ON **AND** record time: _____

   Time: _____

4. Exit to low radiation area. _____

d. **IF** P-166 **NOT** to be used,
   THEN perform following:

   1. Verify OPEN DI-142, P-166 Flush Pump Bypass. _____

   2. Verify SHUT DI-143. _____

   3. Record system pressure as indicated on PI-999: _____

      _____ psi

   4. Exit to low radiation area. _____

   5. **IF** system pressure (Step 5.4.4.d.3) is less than 80 psi, **THEN** contact Unit CO, **AND** request that DI water header pressure be maximized and the time pressure maximized be provided. _____

   6. Record time pressure maximized: _____

      Time: _____

e. Time flush, as follows:

   1. **IF** flushed by P-166,
      THEN wait approximately 2 minutes. _____

   2. **IF** flushed by maximized DI water header pressure, **THEN** wait approximately 15 minutes after header pressure maximized. _____

f. Return to HRSS **AND** measure radiation levels **AND** DI water pressure at Sample Vessel. _____

INITIALS

g. Record data below **AND** exit to low radiation area: _____

1. Time: _____

2. Radiation Level: _____ mR/Hr

3. PI-999 pressure indication: _____ psi

h. Notify Chemistry supervision of radiation dose rate, **AND** wait for instructions on system flush. _____

i. **IF** Chemistry **OR** RP supervision directs discontinuation of flush,
THEN N/A Step 5.4.4.j **AND** GO TO Step 5.4.4.k. _____

j. **IF** Chemistry **OR** RP supervision directs continuation of flush,
THEN repeat Steps 5.4.4.e - 5.4.4.h **AND** record data in Table B (below) until Chemistry **OR** RP supervision directs discontinuation of flush: _____

Table B

Flush #	PI-999 psig	Time	mR/hr After Flush
2			
3			
4			

k. **WHEN** directed by Chemistry **OR** RP supervision,
THEN STOP flush according to following:

1. OPEN valve SC-946. _____

2. SHUT following valves:

ID	Initials
SC-947	
SC-948	

3. OPEN valve SC-939, using remote valve tool. _____

INITIALS

l. Exit to low radiation area **AND** wait 5 minutes. _____

1. **IF** flushed by P-166,
THEN turn P-166 OFF, **AND** record time flush STOPPED: _____

Time: _____

2. **IF** flushed by maximized DI water header pressure,
THEN SHUT DI-142 AND record time flush STOPPED **AND** total flush time: _____

Time: _____ Total Flush Time: _____

m. SHUT following valves, using remote valve tool:

ID	Initials
SC-940	
SC-941	

n. SHUT following valves:

ID	Initials
DI-148	
DI-140	
DI-143	
DI-145	
SC-947	
SC-948	

o. Notify Unit CO DI water flush completed. _____

p. Disconnect quick-connect between Valve DI-148 **AND** the DI water manifold, using a paper towel to prevent spraying. _____

INITIALS

NOTE: The bottom fitting (Step 5.4.4.q) to be loosened is the fitting closest to the tee.

NOTE: Disconnect the bottom fitting first and then the top fitting.

q. Disconnect sample vessel by loosening the top **AND** bottom fittings using appropriate wrench (5/8", 11/16", or adjustable) **AND** a paper towel to prevent spraying. _____

r. Verify sample cart attached to sample vessel. _____

s. Remove shielded sample vessel (carefully) from support while ensuring vessel fittings are directly above catch basin. _____

NOTE: Any water remaining in fittings will dilute sample.

t. Remove liquid from top **AND** bottom vessel fittings with syringe (with long needle) **AND** EJECT liquid into shielded waste bottle. _____

u. Replace Swagelok plugs on Sample Vessel (finger tight). _____

v. Place large polyethylene bag over vessel for transport, **AND** back sample cart away from sample area. _____

w. Replace Swagelok plugs on wall fittings (for Sample Vessel), using appropriate tool. _____

x. **IF** directed by Chemistry supervision, **THEN** GO TO Section 5.13, restore system to normal valve lineup, **AND** RETURN TO Step 5.4.4.y. _____

y. Transport vessel, remote valve tool, **AND** wrenches to Chemistry laboratory on sample cart. _____

INITIALS

z. Record any unusual conditions observed **OR** conditions that interfered with sampling, including step number(s) **AND** affected component ID in comments block, below, **AND** notify Chemistry supervision of unusual condition(s): _____

COMMENTS (Sampling)

aa. Document completion of sampling on PBNP Reactor Coolant Post-Accident Sampling and Analysis Report, Attachment C, Section 3.0. _____

5.5 Collecting Gaseous Sample From Pressurized Sample Vessel

NOTE: A diagram of setup for collecting sample is provided on Attachment B.

5.5.1 Place shielded sample vessel in sample holder in Primary Sample Hood. _____

5.5.2 Obtain contact, radiation reading on sample vessel **AND** record reading for future reference in determining μCi content: _____

Dose Rate: _____ /Hr

NOTE: Sample vessel fittings should be cleaned, but only when radiation levels permit. Thread compounds are NOT to be used anytime.

5.5.3 Verify sample vessel **AND** shielded gas collection vessel are adequately shielded. _____

5.5.4 Connect sample vessel to the shielded gas collection vessel by means of the fittings provided. _____

5.5.5 Connect drain tube to opposite end of sample vessel, **AND** verify Valve 11 on drain tube is OPEN. _____

INITIALS

5.5.6 Verify vacuum line is attached to gas collection vessel at valve 1 location. _____

5.5.7 Verify Gas Collection Vessel valves (Attachment B), as follows:

a. Valves 1 **AND** 2 OPEN. _____

b. Valve 3 SHUT. _____

5.5.8 Evacuate Gas Collection Vessel and connecting lines. _____

5.5.9 SHUT valve 1 **AND** check stable vacuum. _____

5.5.10 **IF** vacuum unstable,
THEN perform following: _____

a. REPAIR leak(s).

b. OPEN valve 1, **AND** repeat Steps 5.5.8 **AND** 5.5.9 until stable.

5.5.11 Secure vacuum **AND** disconnect vacuum line. _____

NOTE: Other methods of pressure adjustment (Step 5.5.12) may be used, as directed by Chemistry supervision.

5.5.12 Adjust vacuum to 12-14" Hg, using valve 1. _____

NOTE: Use the remote valve tool only as needed to reduce dose.

5.5.13 OPEN valves 9A **AND** 9B. _____

5.5.14 OPEN valve 8B one-quarter turn. _____

NOTE: Vacuum drop should be no more than 5 inches Hg/min.

5.5.15 OPEN (crack slightly) valve 8A **AND** control rate of degassing by throttling valve 8A. _____

5.5.16 Allow system to degas for 2-4 minutes. _____

INITIALS

5.5.17 Verify that following sample vessel valves are OPEN.

ID	Initials
9A	
9B	
8A	
8B	

5.5.18 CLOSE valve 2. _____

5.6 Analyzing Gaseous Sample

NOTE: Steps 5.6.1 and 5.6.2 can be done concurrently OR in opposite order.

5.6.1 Hydrogen

a. Draw an appropriate size sample (typically 1cc) using a gas tight syringe **AND** inject sample through injection port of instrument designated by Chemistry supervision, **AND** perform analysis, in accordance with CAMP procedure for designated instrument. _____

b. Record percent (%) Hydrogen from instrument output in space provided on Attachment C, Table 1, Line A. _____

c. Record analysis data for Lines B, C, **AND** D in Attachment C, Table 1. _____

d. Calculate cc/Kg hydrogen in accordance with equation provided in of Attachment C, Section 1.0, **AND** record result in space provided on Table 1. _____

e. Document hydrogen analysis on Attachment C, Section 3.0. _____

INITIALS

5.6.2 Radioactive Noble Gas

a. Draw 0.5 cc sample into gas tight syringe (1or 2 cc for drill/training). _____

b. LOCK syringe, then withdraw from sample vessel. _____

NOTE: Dilution should be performed if contact reading on syringe is >10 mR/hour OR >20% detector spectroscopy amplifier dead time.

c. **IF** syringe contact radiation reading is >10 mR/hr **OR** >20% detector dead time, **THEN** dilute as follows:

1. Inject sample into side-arm flask prepared at Step 5.2.2.h, **AND** allow 15 minutes for thermal mixing. _____

2. Draw 1 cc of sample of dilution into syringe. _____

3. **IF** contact reading is still >10 mR/hr **OR** >20% detector dead time, **THEN** perform following:

(a) Repeat Step 5.6.2.c until reading is ≤10 mR/hr **OR** ≤20% detector dead time. _____

(b) Record number of dilutions performed below, **AND** label each side-arm flask as second, third, dilution, etc.: _____

Dilutions performed for this analysis: _____

d. **IF** syringe contact reading (original sample or dilution) is ≤10 mR/hr **OR** ≤20% detector dead time, **THEN** prepare sample (normally) for analysis, in accordance with procedure for instrument to be used. _____

INITIALS

e. Perform MCA analysis in accordance with CAMP procedure for instrument designated by Chemistry supervision, **AND** obtain MCA printout. _____

f. Record analysis data for Lines A - F in Attachment C, Table 2. _____

g. Determine Common Multiplier (CM) in accordance with equation provided in Attachment C, Section 1.2 **AND** record CM in, Table 2, Line G. _____

h. Correct MCA results using values in Table 2, Lines E - F **AND** record corrected μCi/cc for each Noble Gas isotope detected in spaces provided on Table 2. _____

i. Document noble gas analysis on Attachment C, Section 3.0. _____

5.7 Collecting Liquid Sample From Sample Vessel

5.7.1 Verify valve 2 SHUT. _____

5.7.2 OPEN (carefully), valve 3. _____

5.7.3 Allow liquid sample to drain into 50 ml beaker. _____

5.7.4 **IF** necessary to recover total liquid sample,
THEN direct a slow stream of air through vent line on valve 3. _____

5.7.5 **WHEN** all sample collected,
THEN SHUT following:

ID	Initials
8A	
8B	
9A	
9B	
3	

INITIALS

5.8 Analyzing Liquid Sample

5.8.1 pH and Boron Analysis

a. pH Measurement

1. Transfer approximately 2-5 mls of sample (using an automatic pipettor) into an appropriate beaker for boron analysis. _____

2. Measure pH **AND** record pH in space provided in, Attachment C, Table 3 . _____

b. Boron Analysis

Perform boron analysis in accordance with applicable plant procedure; e.g. CAMP 205, **AND** record appropriate analysis parameters/results in Attachment C, Table 3.

5.8.2 Chloride Analysis

a. **IF** PBNP I.C. **OR** laboratory is **NOT** available, **THEN** perform following:

1. Obtain a suitable aliquot of sample (as directed by Chemistry supervision) for analysis by WE Laboratory Services (LS) using WE Laboratory Services I.C. _____

2. Store sample, as directed by Chemistry supervision in laboratory vent hood until other analyses are completed. _____

3. Contact TSC Manager to arrange for transport of necessary WE Laboratory Services personnel **AND** equipment to PBNP to perform Chloride analysis. _____

b. **IF** PBNP I.C. analyzer **OR** laboratory is available, **THEN** obtain a suitable aliquot of sample (as directed by Chemistry supervision) **AND** analyze for Chloride. _____

INITIALS

c. Record ppm chloride in space provided in Attachment C, Table 4, _____

d. Document chloride analyses on Attachment C, Section 3.0. _____

5.8.3 Iodine Analysis and Gamma Scan

NOTE: More than 0.3 cc may be used for drill/training.

a. Transfer 0.3 cc (or less, based on activity) of sample from the beaker to a 1000 ml polyethylene bottle containing 1000 ml of DI water, using 2 cc syringe or adjustable automatic pipet. _____

b. **IF** the contact radiation reading on 1000 ml polyethylene bottle is >10 mR/hr **OR** >20% detector dead time, **THEN** prepare additional dilution, as follows:

1. Transfer 0.3 cc of diluted sample to another 1000 ml polyethylene bottle containing 1000 ml DI water. _____

2. **IF** contact reading still >10 mR/hr **OR** >20% detector dead time, **THEN** perform following:

(a) Repeat Steps 5.8.3.b.1 **AND** 5.8.3.b.2 until reading is ≤10 mR/hr **OR** ≤20% detector dead time. _____

(b) Record number of dilutions performed below, **AND** label each container as second, third, dilution, etc.: _____

Dilutions performed for this analysis: _____

INITIALS

c. **IF** reading (original sample **OR** dilution) is ≤10 mR/hr **OR** ≤20% detector dead time, **THEN** perform following:

1. Count sample in accordance with CAMP procedure for instrument designated by Chemistry supervision. _____

2. Obtain MCA printout. _____

d. Record analysis/calculation data on in Attachment C, Table 5, Lines A - F. _____

e. Determine Common Multiplier (CM) in accordance with equation provided in Attachment C, Section 2.3, **AND** record CM in Table 5, Line G. _____

f. Correct MCA results using values in Table 5, Lines E - G **AND** record corrected μCi/cc for each isotope listed in Table 5, Section B **AND** C. _____

g. Document analysis of iodine **AND** other isotopes for EPIP 10.2, as applicable on Attachment C, Section 3.0. _____

5.9 Submittal Of Sampling/Analyses Documents

Remove (temporarily) Sections 1.0 - 5.10 **AND** submit to Chemistry supervision. _____

INITIALS

5.10 Sampling/Analysis Report And Continuation Of Procedure - Chemistry Supervision

5.10.1 Review/sign/date completed procedure and Sampling and Analysis Report (Attachment C), as applicable. _____

5.10.2 Forward completed sections of procedure (Sections 1.0- 5.10) **AND** Attachments A-C to the Rad/Chem Coordinator. _____

5.10.1 Direct completion of Sections 5.11- 5.16 of procedure, as appropriate. _____

NOTE: Sections 5.11- 5.16 may be performed in any order, as directed by Chemistry supervision.

5.11 Labeling Samples

Verify chloride, noble gas, iodine **AND** gamma scan samples, including sample to be sent to Off-Site analysis laboratory are labeled with following information (as minimum):

5.11.1 Sample number

5.11.2 Name of sample

5.11.3 Date and time of sampling

5.11.4 Sample volume

5.11.5 Dilution

5.11.6 Technician initials

5.11.7 Contact radiation dose rate _____

5.12 Sample Storage

WHEN analysis completed **AND** samples have been properly labeled, **THEN** store all samples (liquid and gas) **NOT** to be transported to Off-Site Laboratory in the designated high level shielded storage area located in the Auxiliary Building area outside of Gas Decay Tank Room. _____

INITIALS

5.13 System Normal Valve Lineup

NOTE: This section is to be performed during training OR drill exercise, OR when directed by Chemistry supervision.

NOTE: Sign-offs (below) (5.13.1/5.13.2) may be initialed after all positions verified.

5.13.1 Verify valves are positioned as indicated in position column, as follows:

ID	Name	Position	Initials
SC-961C	HX-14C RC Hot Leg Sample HX Outlet	SHUT	
SC-964C	RC Hot Leg Sample Throttle	SHUT	
SC-965C	Z-5C RC Hot Leg Sample Vessel Bypass	SHUT	
SC-971	RC Hot Leg Grab Sample	SHUT	
SC-938B	RE-109 Failed Fuel Monitor Outlet	SHUT	
SC-939	Z-5E High Rad Sample Vessel Inlet	SHUT	
SC-940	Z-5E High Rad Sample Vessel Bypass	SHUT	
SC-941	Z-5E High Rad Sample Vessel Outlet	SHUT	

NOTE: Step 5.13.2 can be omitted for training if no flushing evolutions performed. N/A in initials column.

5.13.2 Verify DI water flush valves positioned as indicated in position column, as follows:

ID	Position	Initials
DI-148	SHUT	
SC-946	SHUT	
SC-947	SHUT	
SC-948	SHUT	
DI-140	SHUT	
DI-141	SHUT	
DI-142	SHUT	
DI-143	SHUT	
DI-145	SHUT	

INITIALS

5.13.3 **IF** DI water header pressure has been maximized **OR** is still maximized,
THEN have Unit CO return DI water header pressure to normal. _____

5.13.4 **IF** DI flush was performed,
THEN RED-LOCK P-166 switch **AND** DI water jumper to following, as applicable:

a. Unit 1: 1RE-219 SG Blowdown Liquid Monitor Demineralized Water Inlet" pipe _____

b. Unit 2: HX-14C RC Hot Leg Sample HX Demineralized Water Flush" pipe _____

NOTE: Sign-offs (below) may be initialed after all positions verified.

5.13.5 **IF** RE-109 is to be put in service,
THEN verify valves are positioned as indicated in position column, as follows:

NOTE: Valves SC-955 AND SC-956C require DSS approval to open following containment isolation AND SC-966C fails to shut.

ID	Name	Position	Initials
SC-938A	RE-109 Failed Fuel Monitor Inlet	OPEN	
SC-956C	HX-14C RC Hot Leg Sample HX Inlet	OPEN	
SC-968	Z-5C Sample Pressure Vessel Common Outlet	OPEN	
SC-969A	FI-903 Flow Indicator Purge Line To T-4 VCT Isolation	OPEN	

5.13.6 OPEN valve for SC-955, RC Hot Leg Sample Isolation **OR** SC-959, RHR Loop Sample Isolation, as applicable, using valve switch on switch panel outside Sample Room. _____

5.13.7 Have Unit CO OPEN SC-966C, Z-5C RC Hot Leg Sample Bypass. _____

5.13.8 Establish 0.2 to 0.4 gpm flow through RE-109, Post Accident Sample Line Monitor by throttling SC-938C. _____

INITIALS

5.13.9 Notify Unit CO RE-109 back In-Service. _____

5.13.10 Record any unusual conditions observed **OR** conditions that interfered with restoring system to normal valve lineup, including step number(s) **AND** affected component ID in comments block, below, **AND** notify Chemistry supervision of unusual condition(s): _____

COMMENTS (Normal Valve Lineup)

5.13.11 Sign **AND** date in Section 5.16 for restoring system to normal valve lineup. _____

NOTE: Section 5.16 to be performed during drill OR training, OR as directed by Chemistry supervision during post-accident conditions.

5.14 Re-Installation Of Shielded Sample Vessel

NOTE: The RP survey and release (Steps 5.14.1 and 5.14.2) may be omitted for drill OR training.

5.14.1 Have RP perform radiological survey of sample vessel **AND** associated tools. _____

5.14.2 **WHEN** sample vessel **AND** tools have been released by RP, **THEN** perform following:

a. Notify Unit CO that RE-109 will be temporarily removed from service for installation of sample vessel. _____

b. Transport sample vessel **AND** tools to affected unit HRSS. _____

INITIALS

NOTE: **Valve positions are indicated on switch panels by green AND red lights, as follows:**
- **Green light (only) lit = SHUT**
- **Red light (only) lit = OPEN**
- **Both lights lit = Intermediate Position**

5.14.3 SHUT SC-955 **AND** verify SC-959 SHUT. _____

5.14.4 **IF** SC-955 (**OR** SC-959) did **NOT** SHUT (green light on panel lit) within 15 seconds,
THEN notify Unit CO. _____

5.14.5 Place a waste container under sample vessel fittings to collect possible liquid when sample vessel fittings are removed. _____

CAUTION

System pressure shall be relieved by opening valves in Step 5.14.6 before removing sample vessel fittings.

5.14.6 OPEN following valves to relieve possible pressure in system.

ID	Name	Initials
SC-939	Rad Sample Vessel Inlet	
SC-940	Z-5E High Rad Sample Vessel Bypass	
SC-941	Z-5E High Rad Sample Vessel Outlet	

5.14.7 SHUT following:

ID	Initials
SC-939	
SC-940	
SC-941	

INITIALS

CAUTION

Paper towel shall be used to contain potential spray when performing Step 5.14.8.

5.14.8 Remove (carefully) Swaglok plugs from HRSS sample vessel inlet **AND** outlet lines, using care to contain potential spray **AND** prevent contamination. _____

5.14.9 Allow any liquid in line to drain into waste container. _____

5.14.10 Remove plugs from sample vessel, **AND** install sample vessel on HRSS fittings. _____

5.14.11 Verify sample vessel fittings are tight. _____

5.14.12 Verify following valves are SHUT:

ID	Name	Initials
SC-939	Z-5E High Rad Sample Vessel Inlet	
SC-940	Z-5E High Rad Sample Vessel Bypass	
SC-941	Z-5E High Rad Sample Vessel Outlet	
8A	Sample Vessel Valve	
8B	Sample Vessel Valve	
9A	Sample Vessel Valve	
9B	Sample Vessel Valve	

5.14.13 OPEN SC-955. _____

5.14.14 **IF** SC-955 did **NOT** OPEN (red light on panel lit) within 15 seconds, **THEN** notify Unit CO. _____

5.14.15 Notify Unit CO that RE-109 back In-Service. _____

5.14.16 Dispose of any liquid collected in waste container, as directed by Chemistry supervision. _____

INITIALS

5.14.17 Return sample cart **AND** tools to original storage location **AND** configuration, as directed by Chemistry supervision. _____

5.14.18 Record any unusual conditions observed **OR** conditions that interfered with re-installation of sample vessel, including step number(s) **AND** affected component ID in comments block, below, **AND** notify Chemistry supervision of unusual condition(s): _____

COMMENTS (Sample Vessel Installation)

5.14.19 Sign **AND** date in Section 5.16 for sample vessel installation. _____

5.15 Preparation/Transfer Of Sample(S) To Off-Site Laboratory

NOTE: The Kewaunee Nuclear Plant, Chemistry laboratory is the Off-Site Laboratory that will perform analyses of the PBNP Post-Accident sample(s). Refer to Post-accident counting agreement with Wisconsin Public Service, Kewaunee Nuclear Plant.

NOTE: Kewaunee Nuclear Plant does NOT utilize the 5 cc glass vial and 1 cc test tube geometries. Therefore, "normal" sample has to be diluted AND placed in one liter poly bottle for transport to Kewaunee Nuclear Plant.

5.15.1 **IF** 1-liter sample used for Iodine analysis **AND** Gamma scan is to be transferred to Kewaunee Nuclear Plant,
THEN enter N/A for Step 5.15.2 **AND** GO TO Step 5.15.3. _____

5.15.2 **IF** separate dilution to be prepared for Kewaunee Nuclear Plant,
THEN prepare dilution, as directed by Chemistry supervision, **AND** label in accordance with Section 5.11. _____

5.15.3 Contact Radioactive Material Shipping personnel to verify completion of any required shipping papers. _____

INITIALS

5.15.4 Complete documents, **AND** submit documents, sample, **AND** copies of all analysis data obtained for sample being shipped to Kewaunee to Radioactive Material Shipping personnel for transport to Kewaunee Nuclear Plant. _____

5.15.5 Sign **AND** date in Section 5.16 for preparation of sample for off-site analysis. _____

5.16 Post-Analysis Documentation/Submittal

5.16.1 Sign/date for task performed/completed below **AND** submit to Chemistry supervision:

Post-Sampling Normal Valve Lineup:

Performer: _____ _____ _____
Printed Name Signature Date

Sampling Vessel Installation:

Performer: _____ _____ _____
Printed Name Signature Date

Preparation of Sample(s) For Off-Site Analysis:

Performer: _____ _____ _____
Printed Name Signature Date

Approval:

Supervisor: _____ _____ _____
Printed Name Signature Date

5.16.2 Forward Sections 5.11 - 5.16 to Rad/Chem Coordinator for re-attachment to Sections 1.0- 5.10 (submitted to Chemistry supervision at Step 5.9). _____

6.0 REFERENCES

6.1 Calculation 98-0058, Post-LOCA Reactor Coolant Sampling System Dose Rates, 08/10/98

6.2 Calculation 98-0018, Evaluation of WEPCO PBNP Post Accident Sampling System

6.3 Calculation 98-0175, Post-LOCA Post-Accident Sampling System

6.4 CAMP 205, Boron-Titration-Mannitol\ph Method

6.5 NPM 94-0030, Compilation of WEPCO Commitments Associated with NUREG 0737, clarification of TMI Action Plan Requirements, 01/12/94.

7.0 BASES

B-1 10 CFR 50.47, Code of Federal Regulations, Emergency Plans

B-2 NUREG-0654, Criteria for Preparation and Evaluation of Radiological Emergency Response Plans and Preparedness in Support of Nuclear Power Plants, Rev. 1, November 1980

B-3 NUREG-0737, Clarification of TMI Action Plan Requirements, November 1980

ATTACHMENT A
PRIMARY COOLANT HIGH-LEVEL SAMPLING FLOW DIAGRAM

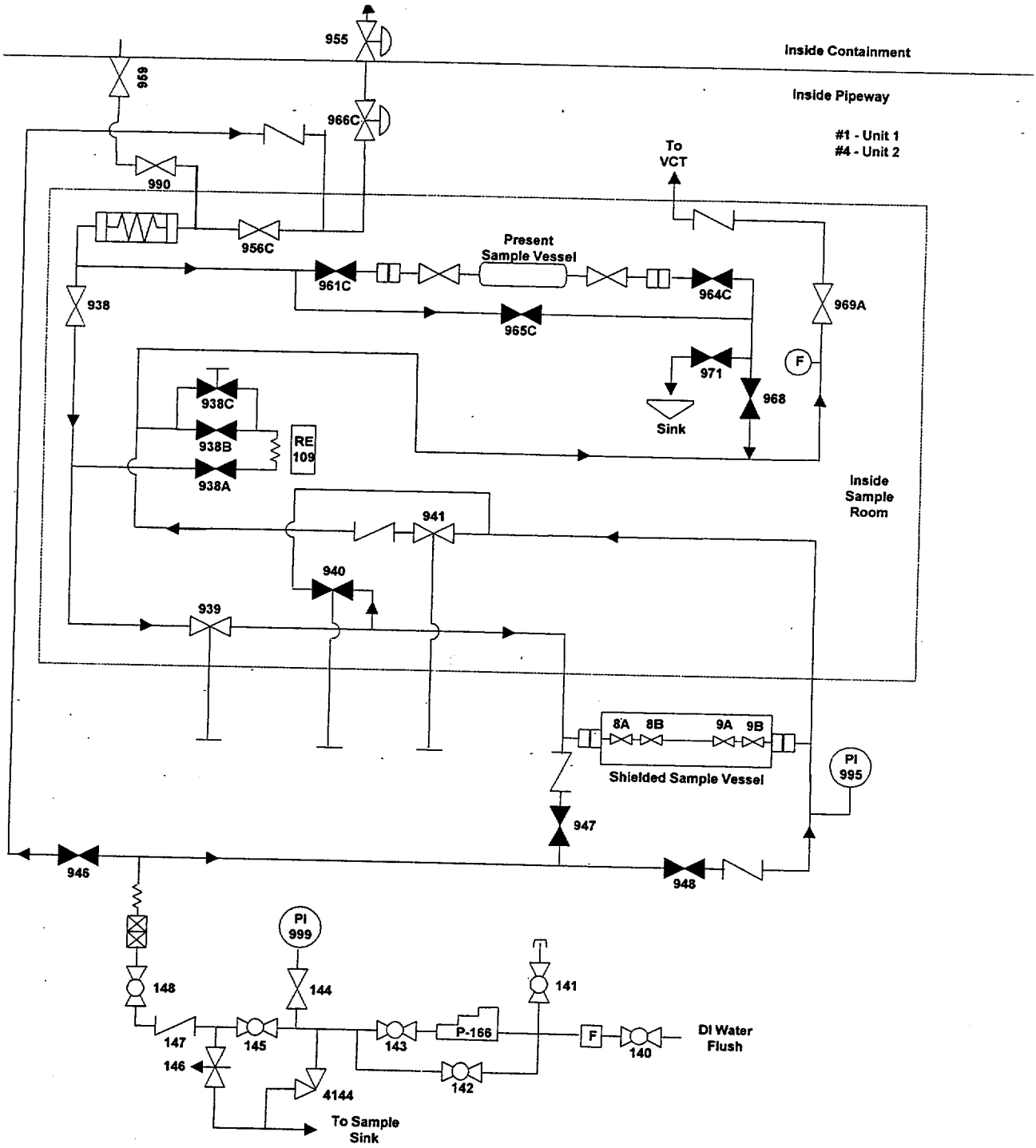

ATTACHMENT B
SETUP FOR TRANSFER OF SAMPLE FROM SAMPLE VESSEL

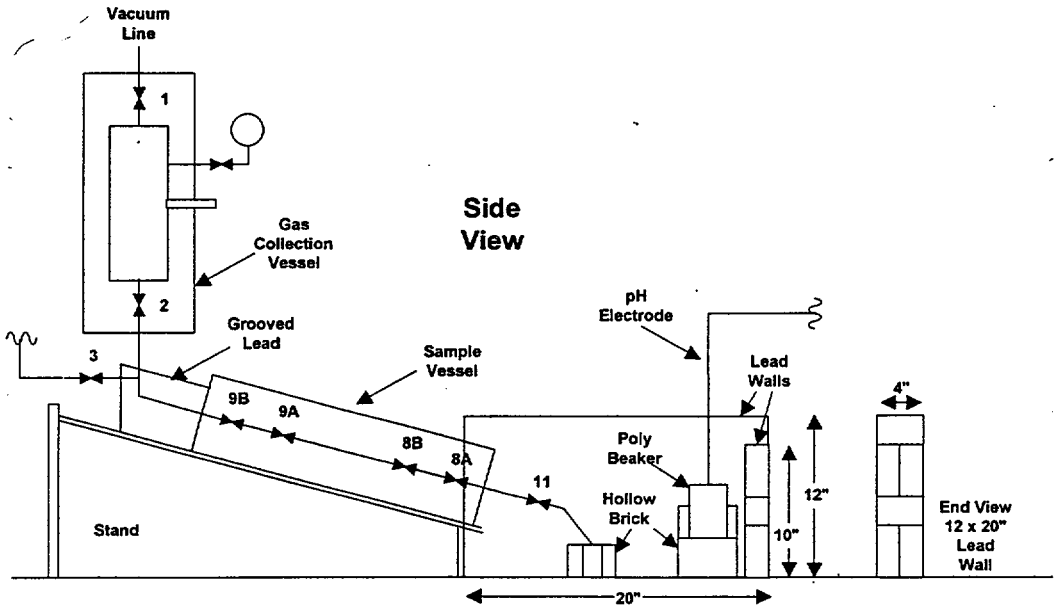

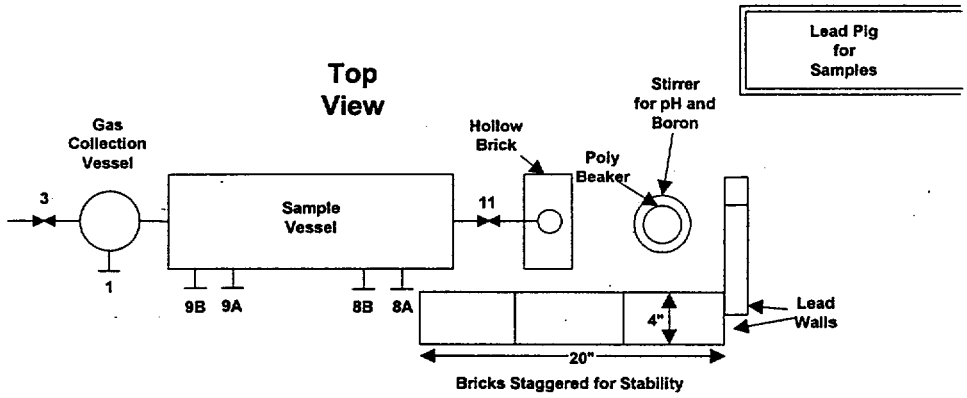

ATTACHMENT C
PBNP REACTOR COOLANT POST-ACCIDENT SAMPLING AND ANALYSIS REPORT
Page 1 of 4

1.0 ANALYSIS OF GASEOUS SAMPLE

1.1 Hydrogen Analysis

Hydrogen @ STP (using following equation with Table 1, Values A-D):

$$cc/Kg\ H_2\ @*STP = \frac{(A)}{100} \times \frac{280}{(B)} \times \frac{(C)}{760} \times \frac{273}{(D)} \times 1000$$

$$= 1.01E^3 \frac{(A) \times (C)}{(B)(D)}$$

Table 1: Hydrogen

A	Percent (%) hydrogen from instrument output	
B	Volume of sample bomb (ml)	
C	Atmospheric pressure (mm Hg)	
D	Laboratory temp (°C + 273)	
	cc/Kg hydrogen in coolant @ * STP	

1.2 Radioactive Noble Gases

MCA Results (corrected, using following equation with Table 2, Values E-F):

$$\textit{Common Multiplier (CM)} = \frac{280}{(G)} \times \frac{(F)}{(E)}$$

If gas dilution **NOT** *required then the quantity* $\frac{(F)}{(E)} = 1$

Table 2: Radioactive Noble Gases

A. Analysis/Calculation Data			B. Noble Gases			
A	Decay time (min)		Isotope	µCi/cc	Isotope	µCi/cc
B	Count Time (sec)		Xe-133		Xe-138	
C	Detector		Kr-85m		Kr-87	
D	Geometry		Kr-88		Ar-41	
E	Vol Sample Vessel (ml)		Xe-133m		Kr-85	
F	Vol sidearm flask (ml)		Xe-135		Xe-131m	
G	Vol of sample removed with gas syringe (ml)					
H	* CM					

ATTACHMENT C
PBNP REACTOR COOLANT POST-ACCIDENT SAMPLING AND ANALYSIS REPORT
Page 2 of 4

2.0 ANALYSIS OF LIQUID SAMPLE

2.1 pH and Boron

pH and Boron (with Boron calculated, using following equation with Table 3, Values A-C):

$$*\text{ppm Boron} = \frac{(B)}{(A)} \text{ x } (C) \text{ x } 10810$$

Table 3: pH and Boron

A	Sample volume (ml)	
B	Normality NaOH	
C	Volume NaOH used (ml)	
D	**Sample pH**	
E	*** ppm Boron**	

2.2 Chloride

Table 4: Chloride

Chloride concentration	**ppm**

ATTACHMENT C
PBNP REACTOR COOLANT POST-ACCIDENT SAMPLING AND ANALYSIS REPORT
Page 3 of 4

2.3 Iodine Analysis

MCA Results (corrected, using following equation and Table 5, Values E-F):

$$*CM = \frac{1050}{V_S} \times F$$

V_S = Volume of sample (first dilution)

F = Any additional dilution factors (2 or more dilutions)

NOTE: Isotopes in Table 5, Column C, are NOT required. However, if time permits, analysis results for as many as possible should be provided to aid in completing EPIP 10.2, "Core Damage Estimation."

NOTE: Multiply the corrected MCA iodine results by the listed multiplication factor to obtain the final iodine corrected result.

Table 5: Iodine and Other Isotopes for EPIP 10.2

A. Analysis/Calculation Data			B. Iodine			C. Other (for EPIP 10.2)	
A	Decay time (min)		Isotope	Mult. Fact.	Final Corrected µCi/cc	Isotope	µCi/cc
B	Count Time (sec)		I-130	× 4.5 =		Rb-88	
C	Detector		I-131	× 4.5 =		Cs-134	
D	Geometry		I-132	× 4.5 =		Cs-137	
E	V_S: Vol of Sample (1st dil), ml		I-133	× 4.5 =		Te-132	
F	Additional dilutions (>1)		I-134	× 4.5 =		Ba-140	
G	* Common Multiplier		I-135	× 4.5 =		La-140	
			Total			La-142	

ATTACHMENT C
PBNP REACTOR COOLANT POST-ACCIDENT SAMPLING AND ANALYSIS REPORT
Page 4 of 4

3.0 PERFORMANCE (SAMPLING and ANALYSES)

SAMPLING:

Performer: _____ _____ _____
Printed Name | Signature | Date

Verifier: _____ _____ _____
Printed Name | Signature | Date

ANALYSES (including calculations, as applicable)

Hydrogen: _____ _____ _____
Performer Printed Name | Performer Signature | Date

Noble Gas: _____ _____ _____
Performer Printed Name | Performer Signature | Date

pH/Boron: _____ _____ _____
Performer Printed Name | Performer Signature | Date

Chloride: _____ _____ _____
Performer Printed Name | Performer Signature | Date

Iodine/Other: _____ _____ _____
Performer Printed Name | Performer Signature | Date

4.0 ROUTING AND APPROVAL

Chemistry Leader _____ _____ _____
Printed Name | Signature | Date

Rad/Chem Coordinator: _____ _____ _____
Printed Name | Signature | Date

TSC Manager: _____ _____ _____
Printed Name | Signature | Date

EPIP 8.4.2

POST-ACCIDENT SAMPLING OF CONTAINMENT ATMOSPHERE

Wisconsin Electric Power Company

DOCUMENT TYPE:	Technical
CLASSIFICATION:	Safety Related
REVISION:	9
EFFECTIVE DATE:	May 19, 2000
REVIEWER:	Qualified Reviewer
APPROVAL AUTHORITY:	Site Services & Assessment Manager
PROCEDURE OWNER (title):	Emergency Preparedness Supervisor
OWNER GROUP:	Emergency Preparedness

Verified Current Copy: _____ _____ _____
Signature Date Time

List pages used for Partial Performance

_____
_____
_____

Controlling Work Document Numbers

_____ _____
_____ _____
_____ _____

NAMES AND TELEPHONE NUMBERS DELETED

TABLE OF CONTENTS

SECTION	TITLE	PAGE
1.0	PURPOSE	3
2.0	PREREQUISITES	3
3.0	PRECAUTIONS AND LIMITATIONS	3
4.0	INITIAL CONDITIONS	4
5.0	PROCEDURE	4
5.1	Preliminary Evaluation	4
5.2	Equipment	5
5.3	Laboratory Setup And Preparation Of Sampling Equipment	6
5.4	Approvals For Implementing Sampling And Analyses	7
5.5	Containment Atmosphere Sampling Using Post-Accident Sampling System (RE-211/RE-212 Bypass Loop)	8
5.6	Containment Atmosphere Sample Analysis	12
5.7	Calculations	16
5.8	Procedure Submittal and Sample Storage	17
5.9	Performer Documentation	18
5.10	Analysis Report	18
6.0	REFERENCES	19
7.0	BASES	19
ATTACHMENT A	PASS VALVE LINEUP FOR CONTAINMENT ATMOSPHERE GRAB SAMPLING	20
ATTACHMENT B	CONTAINMENT ATMOSPHERE POST ACCIDENT SAMPLING ANALYSIS REPORT	21

Reason for performance: ☐ Drill ☐ Training ☐ Fuel Failure

1.0 PURPOSE

This procedure provides instructions for collecting, handling, and analyzing a containment atmosphere sample with potentially high radioactivity due to fuel failure and/or loss of reactor coolant system (RCS) integrity.

This procedure may be used for training and drills or exercises. Chemistry Supervision may exclude any section or step where performance may adversely affect operation of unit.

2.0 PREREQUISITES

2.1 Responsibilities

2.1.1 The Duty Shift Superintendent (DSS) (Operations Support Center Coordinator if TSC is activated) is responsible for the management of the containment atmosphere sample collection and analysis.

2.1.2 Radiation Protection Supervisor (Rad/Chem Coordinator if TSC is activated) is responsible for radiological monitoring controls.

2.1.3 Chemistry Supervision (Chemistry Leader if OSC is activated) is responsible for sample collection and analysis.

2.2 Equipment

2.2.1 Emergency Preparedness Radiation Protection Equipment maintained in OSC.

2.2.2 Refer to Step 5.2 for Chemistry equipment.

3.0 PRECAUTIONS AND LIMITATIONS

3.1 During performance of radiological sampling activities, personnel may be subjected to radiological hazards including high radiation, contamination, and airborne radioactivity.

3.2 Personnel shall wear prescribed protective clothing, dosimetry devices, and other protective equipment, as required by the applicable Radiation Work Permit (RWP) or Re-entry Permit, when performing radiological sampling.

3.3 Improper handling of radioactive material can result in personnel contamination, radioactive material uptake, and unplanned personnel exposure.

3.4 DSS approval is required for the manipulation of valves.

3.5 Containment atmosphere samples shall be taken and analyzed within three (3) hours from the time the decision is made to dispatch a sample team.

4.0 INITIAL CONDITIONS

4.1 Possible fuel failure

4.2 Loss of RCS integrity

5.0 PROCEDURE

INITIALS

5.1 Preliminary Evaluation

NOTE: This section shall be completed prior to entering facade to collect a Containment atmosphere sample under emergency conditions.

5.1.1 Indications of Possible Fuel Damage

NOTE: Fuel failure or loss of RCS integrity may be the cause if any of the conditions in Steps 5.1.1.a - 5.1.1.e exist.

Circle step number(s) and initial to indicate existing condition(s), and enter N/A for conditions that do **NOT** exist:

a. Letdown Valve Gallery Monitor, RE-116, unusually high or offscale high _____

b. Containment Air Particulate Monitor, 1(2) RE-211 and Containment Noble Gas Monitor, 1(2) RE-212, unusually high or offscale high. (Readings may be invalid if containment isolation has occurred.) _____

c. Containment Low-Range Monitor, 1(2) RE-102, and Seal Table Monitor, 1(2) RE-107, unusually high or offscale high _____

d. Post Accident Sample Line Monitor, 1(2) RE-109, unusually high or offscale high. (Readings may be invalid if containment isolation has occurred.) _____

e. Auxiliary Building Vent Stack Monitor, RE-214, indicating significant increase due to auxiliary building airborne activity from letdown and charging pump areas _____

INITIALS

NOTE: Equipment collection and laboratory setup (Sections 5.2 and 5.3) may be performed before or while performing Step 5.1.2.

5.1.2 Evaluation of Radiological Hazards in Access Areas Required for Sampling

a. **WHEN** Radiation Protection (RP) has completed airborne, radioactive contamination, and radiation surveys of facade and all areas through which chemistry personnel must pass, **THEN** obtain following:

1. Radiation Work Permit (RWP) or Reentry Permit, as applicable _____

2. Radiation levels indicated by following monitors: _____

(a) RE-211B, Background Monitor

(b) RE-103, Chem Lab Low Range Monitor

3. Radiation levels in personnel accesses to facade _____

b. Estimate (using RWP, data from Step 5.1.2.a.1 through Step 5.1.2.a.3, and Calculation 97-0011, as applicable) potential personnel (whole body and extremity) dose based on dose rates (area/sample) vs. known or estimated times for performing following:

1. Proceeding to facade _____

2. Obtaining sample (including evacuation/wait time) _____

3. Transporting sample to laboratory _____

4. Performing analysis _____

5.2 Equipment

5.2.1 Sampling Equipment List

a. Flashlight with new or spare batteries _____

b. Lead syringe case (lead brick hollowed out to contain syringes and provide shielding with hinged and latchable, lead cover) _____

INITIALS

c. Radiation dose rate survey instrument _____

d. Two, 2 cc gas-tight (pressure-lock) syringes and spare needle _____

e. Two-way radio with spare battery _____

5.2.2 Analysis Equipment and Reagents List

a. Gas Chromatograph (GC) with adequate supply of carrier gas (Argon), and integrator, as designated by the Chemistry Leader _____

b. Gas sample vessel, glass (sacrificial, for equilibrating sample) and lead shielding for sample vessel (in case sample hood inoperable) _____

c. Marker or labels for marking/labeling sample dilutions _____

d. Multichannel Analyzer (MCA), as designated by the Chemistry Leader _____

e. Poly bottle, 1-liter, one (or more if additional dilutions anticipated) with cap, and 5 cc vial, one (or more if additional dilutions anticipated) with septum _____

f. Silver zeolite (AgZ) reagent (for iodine analysis) _____

g. Syringe 1 cc, gas-tight (pressure-lock), one or more (if additional dilution probable) _____

h. Test tube (for iodine analysis) with cap or stopper _____

5.3 Laboratory Setup And Preparation Of Sampling Equipment

5.3.1 Consult with the Chemistry Leader to determine following:

a. Which GC (and associated integrator) to be used for Containment atmosphere Hydrogen analysis _____

b. Which MCA to be used for Iodine and Noble Gas Analyses _____

5.3.2 Verify GC and integrator selected for use by the Chemistry Leader are operating and calibration current (according to applicable procedures for GC and integrator). _____

INITIALS

5.3.3 Verify MCA selected for use by the Chemistry Leader is operating and calibration current (according to applicable procedures for MCA). _____

5.3.4 Verify spare syringe needle and needles on the two 2 cc gas-tight syringes are not plugged. _____

5.3.5 Load 1 cc of AgZ into one of the two 2 cc gas-tight syringes. _____

CAUTION

Close syringe case carefully to avoid breaking sample syringes.

5.3.6 Place the two syringes and spare needle in lead syringe case and close. _____

5.3.7 Verify cap is correctly seated on 1-liter bottle, tightened, and sealed. _____

5.3.8 Place following near work area for easy accessibility: _____

a. 1-liter poly bottle (Step 5.3.7)

b. 5 cc vial

c. 1 cc gas-tight syringe (one or more)

d. test tube with cap or stopper

5.3.9 Place lead brick barricade toward rear of hood to shield sacrificial gas sample vessel (with sample) in the event hood ventilation is lost. _____

5.3.10 Obtain a two-way radio **AND** perform a radio check with Control Room (CR) and Operation Support Center (OSC). _____

5.4 Approvals For Implementing Sampling And Analyses

Obtain verbal approval to implement sampling and analysis from:

5.4.1 Duty Shift Superintendent (Operations Support Center Coordinator if TSC is activated) _____

5.4.2 Radiation Protection Supervisor (Rad/Chem Coordinator if TSC is activated) _____

INITIALS

CAUTION

Sampling shall not begin until preliminary evaluation has been completed and all approvals for implementation have been received.

NOTE: Section 5.5 to be accomplished under direction of the Chemistry Supervision.

NOTE: For consistency with PBNP Technical Procedures regarding valve positions, the word SHUT is used.

5.5 Containment Atmosphere Sampling Using Post-Accident Sampling System (RE-211/RE-212 Bypass Loop)

5.5.1 Sampling System Operational Verification, Valve Lineup, and Purge

a. Have Control Room perform following:

1. Verify instrument air available for operating containment isolation/sample valves and valves inside containment. _____

2. Verify following pumps secured: _____

(a) P-707-A

(b) P-707-B

3. Verify following AOV valves SHUT: _____

(a) RM-3200A

(b) RM-3200B

(c) RM-3200C

INITIALS

NOTE: DSS approval is required prior to resetting Containment isolation signal.

4. Reset Safety Injection (SI) signal and Containment Isolation (CI) signal (if necessary). _____

5. Switch Mode Selector Switch on ASIP panel to SEPTUM position. _____

NOTE: DSS approval is required prior to opening any Containment isolation valve.

6. OPEN AOV containment isolation valve RM-3200A. _____

b. Proceed to door 182 in Potable Water Room to sample Unit 1 Containment atmosphere **OR** to door 183 in Non-nuclear Room to sample Unit 2 Containment atmosphere. _____

c. Enter facade outside 1(2) RE-211/1(2) RE-212 cubicle. _____

d. OPEN nitrogen supply valves on two nitrogen bottles, **AND** verify respective nitrogen header valves OPEN. _____

e. OPEN valve RM-3200LL. _____

f. Verify pressure at nitrogen regulator is 80 to 90 psig. _____

g. Proceed to grab sample panel, **AND** activate eductor by verifying following valve positions:

1. RM-3200JJ, Sample Septum Inlet Series Isolation, OPEN _____

2. RM-3200M, Sample Septum, SAMPLE _____

3. RM-3200Y, Nitrogen Supply To PASS, OPEN _____

h. Record pressure indicated on PI-3410 (should indicate negative pressure). _____

Indicated pressure:_____psig or in. Hg (circle one as applicable)

INITIALS

i. Exit Facade. _____

NOTE: DSS approval is required prior to opening any Containment isolation valve.

j. Have Control Room OPEN following AOV Containment Isolation valves to initiate purge. _____

1. RM-3200B

2. RM-3200C

k. **WHEN** sampling system has purged for ≥ 10 minutes, **THEN** return to Facade with two, 2 cc gas-tight syringes (one containing 1 cc of AgZ) in lead syringe case. _____

l. Record pressure indicated on PI-3410 (pressure should be greater than pressure recorded at Step 5.5.1.h). _____

Indicated pressure:_____psig or in. Hg (circle one as applicable)

5.5.2 Sample Collection

CAUTION

Syringes shall not be purged while obtaining samples. Purging syringe that contains AgZ will result in AgZ retaining iodine from each withdrawal.

a. Obtain first sample, as follows: _____

NOTE: Syringe should be inserted until syringe cylinder touches septum guide.

1. Collect 1 cc sample, SHUT syringe lock valve, **AND** record time.

Sample Time:_____ (first sample)

2. Remove syringe from septum and place in syringe case.

INITIALS

b. Repeat Step 5.5.2.a.1 and 5.5.2.a.2 for second sample, **AND** record sample time. _____

Sample Time:_____ (second sample)

> **CAUTION**
>
> **Close lead syringe case carefully to avoid breaking sample syringes.**

c. Close lead syringe case and latch. _____

d. Exit Facade. _____

5.5.3 Sample Line Purge

a. Notify Control Room that sampling completed, **AND** have Control Room perform following:

1. SHUT RM-3200A (RE-211/RE-212 Monitor Return) **AND** allow sample inlet to back flush for at least three minutes. _____

> **CAUTION**
>
> **The time period that containment isolation valve RM-3200a and containment isolation valve RM-3200c are both shut with nitrogen pressure present in system shall be minimized.**

2. SHUT RM-3200C (RE-211/RE-212 Monitor Supply). _____

NOTE: DSS approval is required prior to opening any Containment isolation valve.

3. OPEN RM-3200A **AND** allow forward flush of sample outlet for at least three minutes. _____

4. SHUT RM-3200A. _____

5. SHUT RM-3200B. _____

INITIALS

b. Return to Facade, **AND** SHUT following:

1. RM-3200LL _____

2. Supply valves on nitrogen cylinders _____

c. Position valve RM-3200Y to SHUT. _____

d. Deliver samples to laboratory. _____

5.5.4 Record any unusual conditions observed or conditions that interfered with sampling, including step number(s) and affected component ID in Comments block, below.

COMMENTS

5.5.5 Sign and date EPIP 8.4.2 under Sampling, Section 5.9. _____

5.6 Containment Atmosphere Sample Analysis

5.6.1 Volume Adjustments

a. If sample hood ventilation is operable, enter N/A for Step 5.6.1.b, and **GO TO** Step 5.6.1.c. _____

b. **IF** sample hood ventilation is inoperable, **THEN** perform following: _____

1. Verify sacrificial glass sample vessel is at atmospheric pressure.

2. Insert syringe needle through rubber septum of glass sample vessel and place behind brick barricade.

3. Unlock syringe locking device and allow syringe and glass sample vessel to equilibrate for approximately 30 seconds, then re-lock syringe.

INITIALS

4. Withdraw syringe and store in lead syringe case.

5. Repeat Steps 5.6.1.b.1 through 5.6.1.b.4 for remaining syringe.

c. **IF** sample hood ventilation is operable, **THEN** perform following: _____

1. Place syringe deep inside hood and unlock syringe locking device.

2. Allow 30 seconds for equilibration, then re-lock syringe and store in lead syringe case.

3. Repeat Steps 5.6.1.c.1 and 5.6.1.c.2 for remaining syringe.

5.6.2 Hydrogen Analysis

Perform hydrogen analysis on 1 cc of gas sample in syringe **NOT** containing AgZ, in accordance with procedures for Gas Chromatograph and Integrator prepared for analysis in Section 5.3. _____

NOTE: Noble gas sample, subsequent dilution(s), and iodine sample are to be labeled with sample number, sample name, date/time of sample, sample volume, and dilution(s).

5.6.3 Noble Gas Initial Dilution and Equilibration

a. Penetrate capped, 1-liter poly bottle with needle of syringe containing 1 cc AgZ and 1 cc Containment Atmosphere sample. _____

b. Eject gaseous contents of syringe (1 cc sample) from syringe into the 1-liter poly bottle using care to retain all of the AgZ in syringe. _____

c. Purge syringe air space once or twice while needle is inserted in poly bottle to recover all noble gases. _____

d. Remove syringe and store in lead syringe case. _____

INITIALS

e. Tape over syringe needle hole in poly bottle. _____

f. Allow a minimum of 15 minutes for gas to reach equilibrium. _____

NOTE: Iodide analysis (Section 5.6.4) may be performed while Noble Gas sample is reaching equilibrium (Step 5.6.3.f).

5.6.4 Iodine Analysis

a. Hold syringe containing AgZ deep inside hood, unscrew syringe top, and remove internal plunger. _____

b. Pour the AgZ into a counting test tube and cap. _____

c. **IF** the AgZ/iodine sample is less than 1 mR/hr contact, **THEN** count sample directly on the MCA using test tube geometry. _____

d. **IF** the iodine activity is too high to count directly, **THEN** determine radiation level in R/hr at one foot. _____

e. Place sample in proper geometry orientation (attenuating sample, as necessary) in accordance with CAMP procedure for MCA prepared for analysis in Section 5.3. _____

f. Count and determine percent isotopic composition in accordance with CAMP procedure for MCA prepared for analysis in Section 5.3. _____

5.6.5 Noble Gas Analysis

a. Withdraw a 1 cc gas sample from poly bottle prepared in Section 5.6.3. _____

b. If contact reading on syringe is less than 10 mR/hr, enter N/A for Steps 5.6.5.c, and **GO TO** Step 5.6.5.d. _____

INITIALS

NOTE: Dilutions (Step 5.6.5.c) NOT required for drills or training.

c. **IF** contact reading on syringe is greater than 10 mR/hr, **THEN** perform following:

1. Prepare a dilution of sample in syringe in accordance with Section 5.6.3. _____

2. Obtain new syringe **OR** verify syringe is thoroughly purged, then withdraw 1 cc gas sample from second dilution. _____

3. Measure dose rate on syringe. _____

4. **IF** contact reading on syringe is still greater than 10 mR/hr,
THEN repeat Steps 5.6.5.c.1 through 5.6.5.c.3 until dose rate on syringe is less than 10 mR/hr. _____

5. Record number of dilutions. _____

Number of dilutions: _____

NOTE: Spectroscopy amplifier dead time must be less than 20%.

d. **IF** contact reading on syringe is less than 10 mR/hr, **THEN** inject sample into a 5 cc vial and count in accordance with CAMP procedure for instrument prepared in Section 5.3. _____

e. Sign and date EPIP 8.4.2 under Analyses, Section 5.9. _____

INITIALS

5.7 Calculations

5.7.1 Iodine Calculations

a. Calculate total iodine activity using following equation: _____

$$C_{(Ci)} = \frac{R/hr\ @\ 1\ ft.}{6E_{\tau}}$$

b. Determine Total Gamma Energy/Disintegration (E_{τ}) for above equation (Step 5.7.1.a) using Table 1 (following). _____

Table 1

Isotope	(1) Total γ Energy/Dis	(2) % Composition (Fraction)	(1) x (2) Weighted γ Energy
I-130	2.130		
I-131	0.380		
I-132	2.260		
I-133	0.608		
I-134	2.600		
I-135	1.560		
Total Weighted γ Energy:		(E_{τ})	

c. Calculate each individual iodine isotopic concentration (μ Ci/cc), as follows: _____

$$\mu\ Ci/cc\ I_{(i)} = C_{(Ci)} \times 1 \times 10^{+6} \times (\text{Fractional \% Composition})$$

INITIALS

5.7.2 Pressure and Temperature Correction

a. Obtain Containment pressure (psig) and temperature (°F) from Control Room supervision. _____

b. Obtain atmospheric pressure (mm Hg) and temperature (°F) from Chemistry laboratory barometer. _____

c. Perform pressure and temperature correction, using following equation for all analysis results: _____

$$Concentration\ (\mu Ci / cc)\ x\ \frac{(P_{sp} + 14.7)}{P_{lab}}\ x\ \frac{(T_{lab} + 459)}{T_c + 459}$$

Where:

$$P_{lab}\ (\text{psia}) = 14.7\ \text{psi}\ \text{x}\ \frac{\text{P (mm Hg)}}{760\ \text{mm Hg}}$$

P_{sp} = Sample Panel, psig from Step 5.5.1.1

T_c = Containment temperature °F

5.7.3 Sign and date EPIP 8.4.2 under Calculations, Section 5.9. _____

5.8 Procedure Submittal and Sample Storage

NOTE: Steps 5.8.1 and 5.8.2 may be performed in any order.

5.8.1 Submit completed sections of procedure to the Chemistry Leader. _____

5.8.2 Store samples (AgZ and gases) in designated high level shielded storage area located in Auxiliary Building outside of Gas Decay Tank Room. _____

INITIALS

5.9 Performer Documentation

Sampling

Performer: _____ _____ _____
Printed Name Signature Date

Hydrogen Analysis

Performer: _____ _____ _____
Printed Name Signature Date

Iodine Analysis and Calculations

Performer: _____ _____ _____
Printed Name Signature Date

Noble Gas Analysis and Calculations

Performer: _____ _____ _____
Printed Name Signature Date

Supervisor: _____ _____ _____
Printed Name Signature Date

5.10 Analysis Report

5.10.1 Complete Attachment B, Containment Atmosphere Post-Accident Sampling Analysis Report. _____

5.10.2 Forward completed procedure (including completed Attachment B) to the Rad/Chem Coordinator. _____

6.0 REFERENCES

6.1 Calculation 97-0011, Radiation Conditions at the RC-211/212 HUT during PASS sampling, 3/10/97

6.2 NPM 94-0030, Compilation of WEPCO commitments associated with NUREG-0737, Clarification of TMI Action Plan Requirements, 1/12/94

6.3 CAMP 401, Radioactive Standard and Sample Placement for Multichannel Analyzer Calibration and Quantification

6.4 SE 97-96, Unit 2 Post-Accident Sample System Upgrades (MR-97-057/WO9700312)

6.5 SE 97-145, Unit 1 Post-Accident Sample System Ugrades (MR-97-056/WO9706481)

7.0 BASES

B-1 10 CFR 50.47, Code of Federal Regulations, Emergency Plans

B-2 NUREG-0654, Criteria for Preparation and Evaluation of Radiological Emergency Response Plans and Preparedness in Support of Nuclear Power Plants, Rev. 1, November 1980

B-3 NUREG-0737, Clarification of TMI Action Plan Requirements, November 1980

ATTACHMENT A
PASS VALVE LINEUP FOR CONTAINMENT ATMOSPHERE GRAB SAMPLING
(Reference Only)

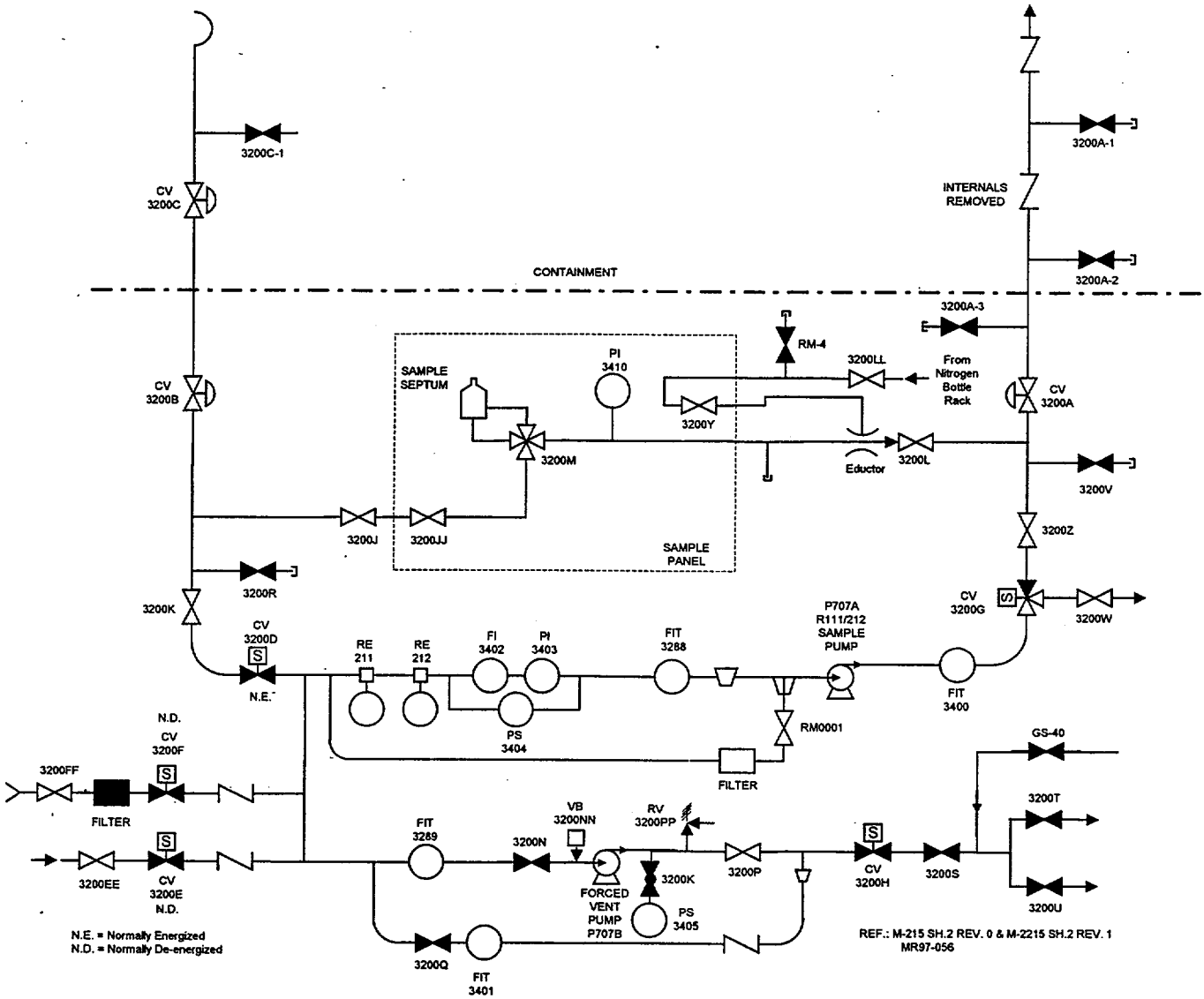

ATTACHMENT B
CONTAINMENT ATMOSPHERE POST ACCIDENT SAMPLING ANALYSIS REPORT
Page 1 of 2

1.0 HYDROGEN ANALYSIS

Percent (%) hydrogen from instrument output (Section 5.6.2):

Table 1: Hydrogen

Percent (%) HYDROGEN (from instrument output, Section 5.6.2)	%

2.0 RADIOACTIVE NOBLE GAS ANALYSIS

Noble Gas @ STP, corrected, using data in Part A of Table 2 and calculations at 2.1 and 2.2, below.

Table 2: Radioactive Noble Gases

A.		B.			
Analysis/Calculation Data		NOBLE GASES			
Decay time (min)		Isotope	µCi/cc	Isotope	µCi/cc
Count Time (sec)		Xe-133		Kr-87	
Detector		Kr-85m		Xe-135m	
Geometry		Kr-88		Ar-41	
[1]Number of Dilutions (D)		Xe-133m		Kr-85	
* Common Multiplier (CM)		Xe-135		Xe-131m	
		Xe-138			

2.1 Common Multiplier*:

$$*CM = (D)^{1} \times \frac{1075}{1.0} \times (\text{Pressure} - \text{Temperature Correction})$$

[1] See Step 5.6.5.c. One or more dilutions may have been performed.

2.2 Pressure-Temperature Correction:

$$= \frac{(P_{SP} + 14.7)(T_L + 459)}{P_L(T_L + 459)}$$

Where: P_{SP} = Pressure of sample, psig from EPIP 8.4.2, Step 5.5.1.l

T_C = Temperature (°F) in Containment

P_L = Pressure (psia) in Laboratory, where:

$$P_L = 14.7 \times \frac{P \ (\text{mm Hg})}{760(\text{mm Hg})}$$

T_L = Temperature (°F) in Laboratory

ATTACHMENT B
CONTAINMENT ATMOSPHERE POST ACCIDENT SAMPLING ANALYSIS REPORT
Page 2 of 2

3.0 RADIOACTIVE IODINE ANALYSIS

Results of MCA

Iodines @ STP, corrected, using data in Part A of Table 3 and calculation at 2.2, above.

NOTE: Isotopes in Part B.2 of Table 3 are not required. However, if time permits, analysis results for as many as possible should be provided to aid in completing EPIP 10.2, "Core Damage Estimation."

Table 3: Iodines and Other Nuclides For Core Damage Estimation (EPIP 10.2)

A.		B.			
Analysis Parameters		B.1: IODINES		B.2 OTHER (for EPIP 10.2)	
Decay time (min)		Isotope	µCi/cc	Isotope	µCi/cc
Count Time (sec)		I-130		Rb-88	
Detector		I-131		Cs-134	
Geometry		I-132		Cs-137	
* Press/Temp Correction		I-133		Te-132	
		I-134		Ba-140	
		I-135		La-140	
		Total		La-142	

4.0 ROUTING AND APPROVAL

NOTE: Documentation of sampling, analyses, and calculations is provided in Section 5.6.3.

Chemistry Leader: _____ _____ _____
Printed Name Signature Date

Rad/Chem Coordinator: _____ _____ _____
Printed Name Signature Date

TSC Manager: _____ _____ _____
Printed Name Signature Date

EPIP 8.4.3

EMERGENCY CONTAINMENT SUMP "A" SAMPLING

Wisconsin Electric Power Company

DOCUMENT TYPE: Technical

CLASSIFICATION: Safety Related

REVISION: 6

EFFECTIVE DATE: May 19, 2000

REVIEWER: Qualified Reviewer

APPROVAL AUTHORITY: Site Services & Assessment Manager

PROCEDURE OWNER (title): Emergency Preparedness Supervisor

OWNER GROUP: Emergency Preparedness

Verified Current Copy: _____ _____ _____
Signature Date Time

List pages used for Partial Performance

_____
_____
_____

Controlling Work Document Numbers

_____ _____
_____ _____
_____ _____

NAMES AND TELEPHONE NUMBERS DELETED

TABLE OF CONTENTS

SECTION	TITLE	PAGE
1.0	PURPOSE	3
2.0	PREREQUISITES	3
3.0	PRECAUTIONS AND LIMITATIONS	3
4.0	INITIAL CONDITIONS	4
5.0	PROCEDURE	4
5.1	Perform Preliminary Evaluation For Possible Fuel Damage	4
5.2	Determine Additional Radiological Protection Activities Required For Sampling	4
5.3	Check For Loss Of Instrument Air	5
5.4	Containment Sump "A" Sampling Procedure (Operations)	5
5.5	Analysis (Chemistry)	5
6.0	REFERENCES	5
7.0	BASES	5

1.0 PURPOSE

This procedure outlines the steps taken and precautions to consider when Operations personnel are required to sample the "A" containment sumps under accident situations.

2.0 PREREQUISITES

2.1 Responsibilities

2.1.1 The Duty Shift Superintendent (DSS) (Operations Support Center Coordinator if TSC is activated) is responsible for the coordination of the Control Room evolutions.

2.1.2 The Duty and Call Radiation Protection Supervisor (Rad/Chem Coordinator if TSC is activated) is responsible for the oversight of the reactor coolant sample collection and analysis.

2.1.3 The Radiation Protection Supervision is responsible for the implementation of radiological monitoring controls.

2.1.4 The Chemistry Supervision is responsible for the sample analysis.

2.2 Equipment

2.2.1 Emergency Preparedness Radiation Protection Equipment maintained in OSC

2.2.2 Clean Poly Sample Bottle

3.0 PRECAUTIONS AND LIMITATIONS

3.1 A preliminary evaluation of the conditions that may be encountered in the pipeway where the sample will be drawn must be done prior to entering the Auxiliary Building.

3.2 During sampling, personnel may be subjected to radiological hazards including high radiation, contamination, and airborne radioactivity.

3.3 Personnel shall wear prescribed protective clothing, dosimetry devices, and other protective equipment when performing radiological sampling.

3.4 Improper handling of radioactive material can result in personnel contamination, radioactive material uptake, unplanned personnel exposure, and cross-contamination of samples.

3.5 Instrument air must be available to the unit to perform sampling.

4.0 INITIAL CONDITIONS

Indications of possible fuel damage per Step 5.1 evaluation.

5.0 PROCEDURE

NOTE: This evaluation shall be completed prior to entering the Auxiliary Building to obtain a containment "A" sump sample.

5.1 Perform Preliminary Evaluation For Possible Fuel Damage

Evaluate all of the following for indications of fuel damage:

NOTE: Containment isolation may invalidate readings for Steps 5.1.1, 5.1.2, and 5.1.3.

5.1.1 The letdown valve gallery monitor (RE-116) unusually high or offscale. If greater than 200 mR/hr, do not take the sump "A" sample.

5.1.2 The failed fuel monitor 1(2)RE-109 unusually high or offscale. If greater than 100 mR/hr, do not take the sump "A" sample.

5.1.3 The containment atmosphere monitors, 1(2)RE-211 and 1(2)RE-212 unusually high or offscale.

5.1.4 The containment low-range monitors, 1(2)RE-102 and seal table monitors, 1(2)RE-107 reading unusually high or offscale.

5.1.5 The Auxiliary Building vent stack monitor, RE-214, could show a significant increase due to auxiliary building airborne activity from the letdown and charging pump areas.

5.1.6 The sample room area monitor, 1(2)RE-106 and charging pump area 1(2)RE-104, would give an indication of conditions in the Auxiliary Building and sample lines.

5.2 Determine Additional Radiological Protection Activities Required For Sampling

After review of the radiation monitoring system readouts, Radiation Protection will determine any airborne and radiation surveys appropriate before Auxiliary Building entry.

5.3 Check For Loss Of Instrument Air

Verify that instrument air is still in service to the affected unit. The sample cannot be obtained without instrument air to open the sample valves.

5.4 Containment Sump "A" Sampling Procedure (Operations)

5.4.1 Do **NOT** initiate this procedure under emergency conditions until the evaluations of Section 5.1 have been completed and results reviewed by the following:

a. Duty Shift Superintendent (Operations Support Center Coordinator if TSC is activated),

b. Duty and Call Radiation Protection Supervisor (Rad/Chem Coordinator if TSC is activated), and

5.4.2 **IF** approval is granted by those listed in Step 5.4.1, **THEN** obtain a Containment Sump "A" sample using Procedure OI 95, Obtaining A Sump "A" Sample.

5.4.3 Take a contact reading on the sample prior to transport and inform Radiation Protection Supervision of the value.

5.5 Analysis (Chemistry)

5.5.1 Analyze the sample for boron.

5.5.2 Perform gamma scan of sample.

5.5.3 Report results to Rad/Chem Coordinator or Duty Shift Superintendent.

6.0 REFERENCES

OI 95, Obtaining A Sump "A" Sample

7.0 BASES

None

EPIP 10.3

POST-ACCIDENT CONTAINMENT HYDROGEN REDUCTION

Wisconsin Electric Power Company

DOCUMENT TYPE:	Technical
CLASSIFICATION:	Safety Related
REVISION:	5
EFFECTIVE DATE:	May 19, 2000
REVIEWER:	Manager's Supervisory Staff
APPROVAL AUTHORITY:	Site Services & Assessment Manager
PROCEDURE OWNER (title):	Emergency Preparedness Supervisor
OWNER GROUP:	Emergency Preparedness

Verified Current Copy: _____ _____ _____
Signature Date Time

List pages used for Partial Performance

_____
_____
_____

Controlling Work Document Numbers

_____ _____
_____ _____
_____ _____

NAMES AND
TELEPHONE NUMBERS
DELETED

TABLE OF CONTENTS

SECTION	TITLE	PAGE
1.0	PURPOSE	3
2.0	PREREQUISITES	3
3.0	PRECAUTIONS AND LIMITATIONS	4
3.1	Hydrogen Recombiner	4
3.2	Directing The Containment Atmosphere To The Auxiliary Building Ventilation System	4
4.0	INITIAL CONDITIONS	5
4.1	Hydrogen Recombiner	5
4.2	Directing The Containment Atmosphere To The Auxiliary Building Ventilation System	5
5.0	PROCEDURE	5
5.1	Hydrogen Recombiner	5
5.2	Directing The Containment Atmosphere To The Auxiliary Building Ventilation System	11
6.0	REFERENCES	13
7.0	BASES	13
ATTACHMENT A	NORMAL SYSTEM VALVE LINEUP FOR THE POST ACCIDENT CONTAINMENT VENTILATION SYSTEM (PACVS)	14
ATTACHMENT B	INSTRUMENT AND CONTROL SETTINGS FOR STARTUP AND OPERATION OF HYDROGEN RECOMBINER	15
ATTACHMENT C	HYDROGEN RECOMBINER INSTALLATION	16
ATTACHMENT D	PROPRIETARY INFORMATION OF ROCKWELL INTERNATIONAL CORPORATION - N1390MM120004	17
ATTACHMENT E	POST ACCIDENT CONTAINMENT VENTING RATE	18

1.0 PURPOSE

This procedure provides for the reduction of containment hydrogen concentrations in the post-LOCA environment. This can be accomplished in two ways. The first method, detailed in Step 5.1, provides guidance for the acquisition, installation, and operation of the Rockwell International Hydrogen Recombiner. The second method, which is detailed in Step 5.2, describes the actions for directing the containment atmosphere from the containment to the Auxiliary Building ventilation system charcoal filter, F-23.

2.0 PREREQUISITES

2.1 Responsibilities

2.1.1 Operations is responsible for directing the containment atmosphere to the auxiliary building ventilation system under the direction of the OSC Coordinator and Rad/Chem Coordinator.

2.1.2 The Resource Coordinator at the EOF is responsible for making arrangements to have the hydrogen recombiner shipped to Point Beach Nuclear Plant.

2.1.3 The Maintenance and Operations group are responsible for the setup and operation of the hydrogen recombiner under the direction of the OSC Coordinator and Rad/Chem Coordinator.

2.2 Equipment

2.2.1 Hydrogen Recombiner stored by the Pooled Inventory Management System (PIMS).

2.2.2 Auxiliary Building truck access.

2.2.3 Auxiliary Building Crane (both main and aux hoist).

2.2.4 MCC 1B31.

2.2.5 Hydrogen Recombiner electrical and mechanical connections.

2.2.6 Training Installation Video tape #61.

3.0 PRECAUTIONS AND LIMITATIONS

3.1 Hydrogen Recombiner

3.1.1 The hydrogen recombiner is a skid-mounted unit with a detached control cabinet. The unit has to be brought in from off-site; therefore, the Auxiliary Building truck access area must be available.

3.1.2 The hydrogen recombiner must be placed on the El. 46′ of the Auxiliary Building. This requires the use of the Auxiliary Building crane; therefore, the crane must be available. It is powered from MCC 1B31, which must also be available.

3.1.3 The hydrogen recombiner is stored in Memphis, Tennessee, so delivery will take 1-2 days.

3.1.4 All electrical and mechanical connectors are on-site. No connectors come with the unit.

3.1.5 The unit may become highly radioactive (>500 R/hr) and ALARA considerations will need to be made.

3.1.6 The unit has an upper limit for hydrogen inlet concentration of 5%. Reference Rockwell Component Instruction Manual, 01398.

3.1.7 If at any time during operation containment integrity must be established, valves H_2V-19, H_2V-20, H_2V-22 and H_2V-23 must be manually shut. Do **NOT** enter pipeways.

3.2 Directing The Containment Atmosphere To The Auxiliary Building Ventilation System

3.2.1 Ensure Auxiliary Building ventilation exhaust is in operation prior to **AND** during venting operations.

3.2.2 Use respiratory protection as prescribed by Radiation Protection when sampling and draining.

3.2.3 The valves in this system provide containment integrity and must **NOT** be operated unless authorized by the Duty Shift Superintendent (DSS).

3.2.4 Containment venting must be stopped immediately should the operating Auxiliary Building ventilation exhaust fan, W30 or W21, trip.

4.0 INITIAL CONDITIONS

4.1 Hydrogen Recombiner

4.1.1 Any event that may lead to or has caused significant core damage resulting in the release of hydrogen to the containment in a concentration of >0.5% and <5.0%.

4.1.2 The equipment listed in Step 2.2 is available, or will be available within 48 hours.

4.2 Directing The Containment Atmosphere To The Auxiliary Building Ventilation System

Any event that may lead to or has caused significant core damage resulting in the release of hydrogen to the containment in a concentration ≥5.0%.

5.0 PROCEDURE

NOTE: IF hydrogen concentration is >0.5% and <5.0%, THEN complete Step 5.1, OTHERWISE go to Step 5.2

INITIALS

5.1 Hydrogen Recombiner

5.1.1 Contact an agent for the Pooled Inventory Management Systems (PIMS). See the Emergency Telephone Directory for a list of names and numbers. _____ EOF

5.1.2 Notify the agent of our need to have the hydrogen recombiner shipped to Point Beach. Specify Unit 116A. _____ EOF

5.1.3 Inform the agent that the hydrogen recombiner **SHALL** be shipped by flatbed or canvas top truck. It cannot be unloaded from a closed truck at Point Beach. _____ EOF

5.1.4 Inform agent that PIMS **SHALL** load the hydrogen recombiner on the flatbed with the inlet and outlet connections facing toward the tractor if it is needed on Unit 2, facing towards the rear of the trailer if it is needed on Unit 1. _____ EOF

5.1.5 Have the appropriate Maintenance and Operations groups view the hydrogen recombiner installation video tape (No. 61). _____ TRN

INITIALS

5.1.6 Remove all hydrogen recombiner electrical and mechanical connectors from their storage box in the warehouse and place them on the El. 46' of the Auxiliary Building near the center stairway.

MTN

5.1.7 Upon arrival of the hydrogen recombiner to the site, notify appropriate personnel (i.e., OSC Coordinator or Rad/Chem Coordinator).

MTN

5.1.8 Verify PIMS complied with Steps 5.1.3 and 5.1.4.

MTN

5.1.9 Direct Radiation Protection survey the area.
IF dose rates in the area need to be reduced
THEN flush the containment spray lines.

MTN

5.1.10 Uncrate/uncover the hydrogen recombiner while on the truck. All materials used for delivery should be removed from the site. Move the hydrogen recombiner into the Auxiliary Building truck access area.

MTN

5.1.11 The hydrogen recombiner weighs approximately 8,000 lbs. and therefore must be rigged for a 2.2 x 8,000 = 17,600 lb. load. The control cabinet weighs approximately 2,000 lbs. and must be rigged for 2.2 x 2000 = 4400 lb. load. Safe load paths for safety-related handling services, SLP 4, Auxiliary Building Main Crane, **SHALL** be followed while transporting the unit.

MTN

5.1.12 The hydrogen recombiner is to be placed in the location shown on Attachment C. The control cabinet should be placed near the power supply located on the east wall of the spent fuel pool purification room. Controls are to be facing east.

MTN

5.1.13 Install barriers **AND** rope off the recombiner and floor hatch areas of M-3-8-34-F72 for Unit 1 or M-3-8-34-F69 for Unit 2 for personnel safety.

MTN

5.1.14 Floor hatch M-3-8-34 F72 for Unit 1 or M-3-8-34-F69 for Unit 2 should be removed and placed in an appropriate area.

MTN

INITIALS

CAUTION

For ALARA reasons do NOT enter pipeways to verify position of valves H_2V-1, H_2V-2 or H_2V-3; these valves are locked open.

5.1.15 Verify valves are lined up per Attachment A. (Reference Bechtel P&ID M-224)

MTN

5.1.16 Cautiously remove the blind flanges on the supply and return lines to prevent damage to the gaskets.

MTN

5.1.17 Attach the two 8' sections of flexible 2" pipe to the flanges. Flange and closure bolting instruction MI 32.1 **SHALL** be used for piping connections.

MTN

CAUTION

Care must be taken to prevent damage to the bellows on the recombiner when connecting the flexible piping.

5.1.18 Remove the blind flanges on the recombiner. Flexible expansion joints are installed on the unit with restraining bars. Since we connect flexible hoses to the recombiner, the bellows on the recombiner remain fixed. Use Grade B-7 stud material to restrain the bellows in a similar configuration as it originally comes. (The video will show the restraint configuration but it is important that the studs be Grade B-7.)

MTN

5.1.19 The expansion joint allowable deflections for installation and operation are listed below.

MTN

INITIALS

NOTE: The flexibility of the expansion joints is measured from the face centerline of the 2-inch raised face flanges.

Displacement	Installation (maximum)	Operation (maximum)
Axial Deflection	**0.12 in**	**0.06 in**
In-Plane Rotation	**4 degrees**	**0.5 degrees**
In-Plane Displace	**0.18 in**	**0.06 in**
Torsional Rotation	**0 degrees**	**0.05 degrees**

CAUTION

If the gasket on the motor blower assembly is made of rubber, it must be exchanged for a flexitallic gasket before operation to prevent equipment damage or personnel hazards.

5.1.20 Ensure the motor blower assembly has a flexitallic gasket.
IF PIMS changed out the flexitallic gasket,
THEN they will have enclosed a flexitallic gasket to go into the motor blower assembly, and it must be installed.

MTN

5.1.21 Pressure test the recombiner and flexible pipes using service air to 10 psig. Using the existing pressure test connection H_2V-21 hydrogen recombiner supply test connection valve, or H_2V-25, hydrogen recombiner outlet test connection drain valve, snooping all connections.

MTN

5.1.22 Remove the wood covers from the external blower and the top of the recombiner. Remove any desiccant contained inside the recombiner. Open all electrical junction boxes and remove all desiccant bags.

MTN

5.1.23 Verify that the spare 100 amp breaker at Position 2B in Motor Control Center 1B31 is danger tagged OPEN.

MTN

5.1.24 Verify that the spare 20 amp breaker at Position 31 in Lighting Panel 18L is danger tagged OPEN.

MTN

5.1.25 PIMS sends a hydrogen analyzer along with the unit. It is **NOT** needed and therefore should **NOT** be electrically connected.

MTN

INITIALS

NOTE: Make sure the thermocouple cables are at least two feet from any power cable.

5.1.26 Using the electrical schematic provided in the component instruction manual, layout the 480 V, 120 V, and thermocouple cables from the control cabinet to the unit. Install guards and mark with black and yellow tape to prevent tripping hazards and damage.

MTN

5.1.27 Inside the upper front panel of the control cabinet is a terminal block designed to provide remote indication and control to the control room. The control power leads need to be jumpered out to operate the unit locally. Install a jumper on Terminal Block TB-7 between TB-7-322 and TB-7-33 (see video).

MTN

5.1.28 Connect all power, control, and instrument cables per Rockwell International Thermal Hydrogen Recombiner System Component Instruction Manual, Control No. 01398, maintained in the TSC Satellite File System.

MTN

5.1.29 Close local knife switch at the cabinet the connections are made in.

MTN

5.1.30 Remove danger tag and CLOSE 100 amp breaker at Position 2B in MCC 1B31.

MTN

5.1.31 Remove danger tag and CLOSE 20 amp breaker at Position 31 in Lighting Panel 18L.

MTN

CAUTION

The operation of the hydrogen recombiner may cause the area to become a high radiation area. Portable shielding may be installed prior to the operation of the recombiner, if appropriate.

5.1.32 Verify that all controls, settings, switches, and valves are as shown in Attachment B to establish startup and operating conditions.

MTN

INITIALS

CAUTION

If at any time during operation containment integrity must be established, valves H_2V-19, H_2V-20, H_2V-22 and H_2V-23 must be manually shut. Do NOT enter pipeways.

5.1.33 Open Containment Isolation Valves H_2V-19, H_2V-20, H_2V-22 and H_2V-23.

OPS

5.1.34 Turn HS-1 to START. The unit is now in automatic startup and will stabilize at temperatures where hydrogen is being recombined. Operate the recombiner as necessary to achieve and maintain a containment hydrogen concentration of less than 3 percent. Additional information is available from the Component Instruction Manual No. 01398.

OPS

CAUTION

Evaluate radiological implications prior to obtaining sample.

5.1.35 Operate Valves H_2V-8 and H_2V-9, containment sample isolation valves, as necessary to grab samples of the containment atmosphere for Chemistry analysis.

OPS

CAUTION

Radioactive gas may be released when draining the exhaust line. Respiratory protection is required when draining/sampling.

5.1.36 Periodically during operation of the hydrogen recombiner, cycle Valves H_2V-6 and H_2V-7 (the containment exhaust drain valves), to drain any moisture out of the system piping. Shut when gas starts to issue from the drain.

OPS

5.1.37 **IF** problems occur during operation of the recombiner, **THEN** reference Attachment D for troubleshooting assistance.

OPS

INITIALS

5.1.38 For **Emergency Shutdown**, set HS-1 to STOP. _____ OPS

5.1.39 For **Normal Shutdown** of the recombiner:

a. Reset TIC-4 to 500°F. _____ OPS

b. **WHEN** TIC-4 indicates below 600°F, set HS-1 to OFF and CB1, CB2, CB3, CB4, and CB5 to OPEN. _____ OPS

c. Set Facility Power Switch to OFF. _____ OPS

5.2 Directing The Containment Atmosphere To The Auxiliary Building Ventilation System

5.2.1 Ensure Auxiliary Building ventilation exhaust system in operation. (W30A or B and W21A or B.) _____ OPS

CAUTION

Do NOT enter pipeways to verify position of valves H_2V-1, H_2V-2, or H_2V-3 for ALARA reasons; these valves are locked open.

5.2.2 Ensure valves are lined up per Attachment A. (Reference Bechtel P&ID M-224) _____ OPS

5.2.3 Shift the auxiliary building ventilation absolute filter control switch to the "close" position, thereby shifting the auxiliary building exhaust fans W30A&B suction to the charcoal filter F-23. _____ OPS

5.2.4 Verify RE-214, PAB vent stack monitor, and SPING 23, PAB vent stack SPING, are operable. Secure flow to PAB vent stack ISOKINETIC sampler. (Ref EPIP 7.3.2) _____ OPS

INITIALS

CAUTION

High service air flow rates into containment may reduce header pressure. Consider starting standby SA compressor.

5.2.5 Cut in service air (H_2V-12 and H_2V-13) to the containment if necessary to establish required pressure per Attachment E. _____ OPS

5.2.6 Operate Valves H_2V-8 and H_2V-9, containment sample isolation valves as necessary to grab Radiation Protection samples of the containment atmosphere for Chemistry analysis. _____ OPS

CAUTION

Radioactive gas may be released when draining the exhaust line. Respiratory protection is required when draining/sampling.

5.2.7 Drain the exhaust line through H_2V-6 and H_2V-7, shut when gas starts to issue from the drain. _____ OPS

NOTE: The position of H_2V-5 will be determined by Chemistry and Radiation Protection based upon containment atmospheric radioactivity levels and the prevailing atmospheric conditions.

NOTE: H_2V-5 position indicator works like a clock. On first opening of H_2V-5, check shut H_2V-4, read position of H_2V-5, fully open H_2V-5 and read position, then position H_2V-5 to correct setting. (i.e., if H_2V-5 shut indicates 12:00, open indicates 2:30, 50% open will be 1:15, 25% open will be 12:37, etc.).

5.2.8 Throttle H_2V-5 to the required position per Attachment E. _____ OPS

INITIALS

5.2.9 Open H_2V-4, containment to ventilation line isolation valve (this initiates flow).

OPS

CAUTION

Radioactive gas may be released when draining the exhaust line. Respiratory protection is required when draining/sampling.

5.2.10 Periodically during the containment venting, cycle Valves H_2V-6 and H_2V-7 (the containment exhaust drain valves), to drain any moisture out of the system piping, shut when gas starts to issue from the drain.

OPS

5.2.11 **WHEN** venting is complete,
THEN shut Valves H_2V-4 and H_2V-5. Repeat venting as directed.

OPS

6.0 REFERENCES

6.1 Rockwell Component Instruction Manual, CI #01398

6.2 Bechtel P&ID M-224, Post Accident Containment Venting and Monitoring System

6.3 Hydrogen Recombiner Video, Number 61

6.4 SLP 4, Aux Building Main Crane

6.5 EPIP 7.3.2, Post-Accident Isokinetic Stack Sampling System

7.0 BASES

None

ATTACHMENT A (Reference M224)
NORMAL SYSTEM VALVE LINEUP FOR THE POST ACCIDENT CONTAINMENT VENTILATION SYSTEM (PACVS)

Valve No.	Name	Normal Position	Initials
H_2V-1	Containment exhaust isolation valve	Open*	
H_2V-2	Containment sample isolation valve	Open*	
H_2V-3	Containment air supply valve	Open*	
H_2V-4	Containment to ventilation line isolation valve	Shut	
H_2V-5	Containment to ventilation flow regulating valve	Shut	
H_2V-6	Containment exhaust drain valve	Shut	
H_2V-7	Containment exhaust drain valve	Shut	
H_2V-8	Containment sample isolation valve	Shut	
H_2V-9	Containment sample isolation valve	Shut	
H_2V-10	IVTC valve exhaust line	Shut	
H_2V-11	IVTC valve in sample line	Shut	
H_2V-12	Supply air to containment	Shut	
H_2V-13	Supply air to containment	Shut	
H_2V-14	Supply air IVTC	Shut	
H_2V-15	Supply air IVTC	Shut	
H_2V-16	Containment exhaust gauge root stop valve	Shut	
H_2V-17	Containment exhaust gauge vent valve	Shut	
H_2V-18	Containment exhaust gauge stop valve	Shut	
H_2V-19	H_2 recombiner inlet isolation	Shut	
H_2V-20	H_2 recombiner inlet isolation	Shut	
H_2V-21	H_2 recombiner inlet IVTC	Shut	
H_2V-22	H_2 recombiner outlet isolation	Shut	
H_2V-23	H_2 recombiner outlet isolation	Shut	
H_2V-24	H_2 recombiner/supply air common IVTC	Shut	
H_2V-25	H_2 recombiner outlet drain	Shut	

* These valves are located in the pipeways and are normally locked open. Because of high radiation levels in the pipeways after the accident it may **NOT** be possible to verify the valve position for these valves.

ATTACHMENT B
INSTRUMENT AND CONTROL SETTINGS FOR STARTUP AND OPERATION OF HYDROGEN RECOMBINER

Device	Function	Setting	Initials
	Temperature Control (deg.F)		
TIC-4	Reaction Chamber Gas	1350	
TISH-3	Heater Outlet Gas Temperature	1325	
TISH-6	Gas Return Temperature	190	
	Circuit Breakers		
CB1	Enclosed Blower/Motor	Closed	
CB2	Heat Exchanger Fan Motor	Closed	
CB3	Heaters	Closed	
CB4	Instrument Control Power	Closed	
CB5	Primary Power	Closed	
	Start Switch		
HS-1	Start-Stop Switch	Center	
	NOTE: HS-1 is a momentary switch and will return to center after operation.		
	Timers		
KS-1	Low Temperature Start Cutoff	2 hours	
	Motor Starter		
JS-1	Enclosed Blower/Motor	Auto	
JS-2	Heat Exchanger Fan Motor	Auto	
	Valves		
V1	Differential Pressure Transmitter - Low Pressure	Open	
V2	Differential Pressure Transmitter - High Pressure	Open	
V3	Blower Inlet Valve	Open	

ATTACHMENT C
HYDROGEN RECOMBINER INSTALLATION

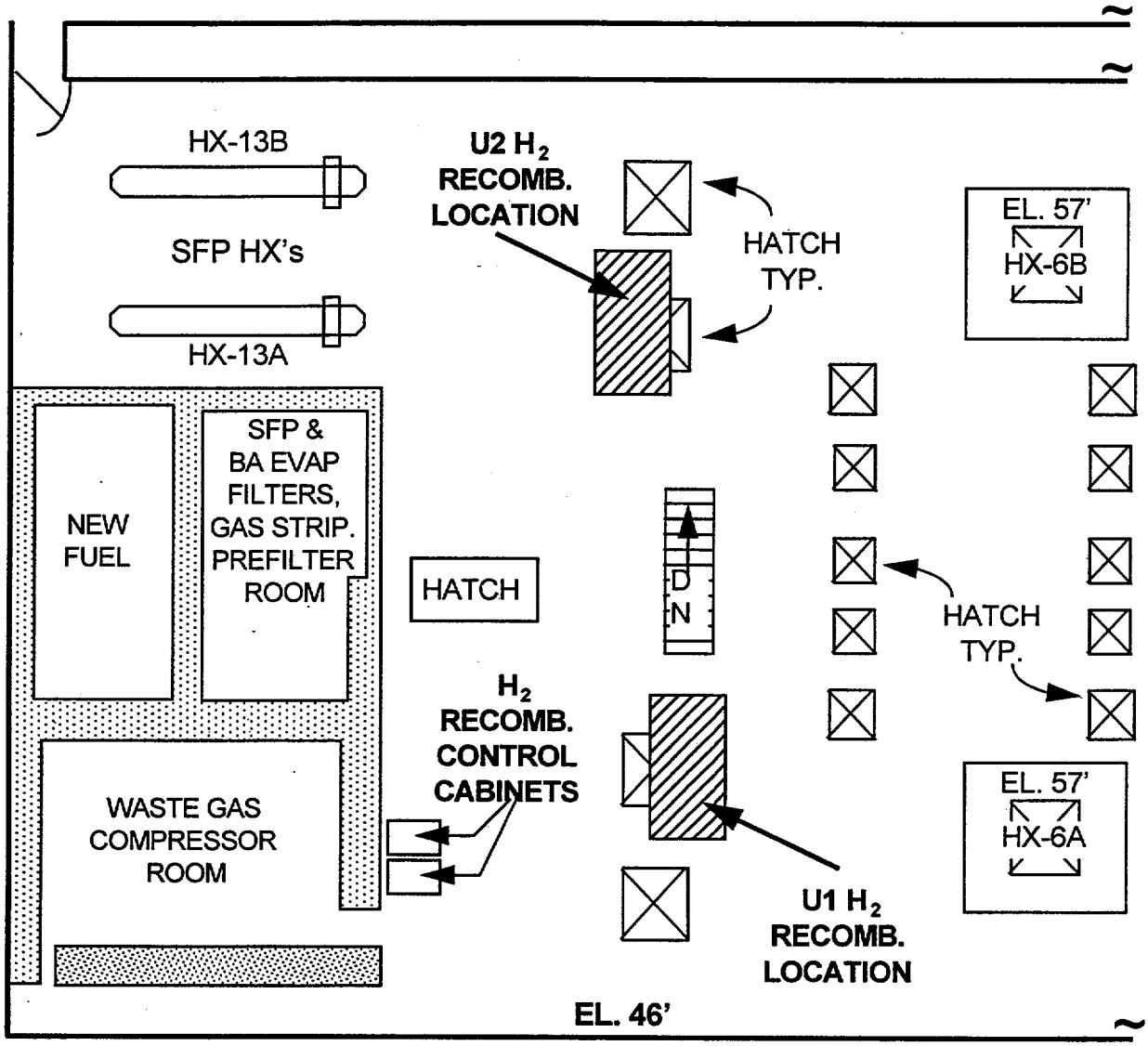

ATTACHMENT D
PROPRIETARY INFORMATION OF ROCKWELL INTERNATIONAL CORPORATION - N1390MM120004

Difficulty	Probable Cause	Remedial Action
Temperature controller or switch indicates full scale, followed by automatic system shutdown.	Thermocouple failure or associated circuit failure of indicated channel.	Replace thermocouple associated with failed circuit or associated circuit. The redundant thermocouple leads are wired to the terminal block in the control console. The instrument leads must be connected to the redundant thermocouple leads.
System shutdown due to low-temperature indication.	a. Temperature controller or temperature switch failure.	1. Repair or replace component.
	b. Low-voltage power provided to system.	2. Improve facility power supply.
	c. Heater failures (more than 33% of heaters, which is unlikely).	3. Replace open heaters, after determining by resistance test, which are bad.
	d. Thermocouple failure.	4. Switch to spare.
	e. Circuit breaker failure.	5. Repair or replace component.
Blower motor high-temperature trip.	Containment outlet valve closed or partially closed.	Open containment outlet valve.
Blower motor and heat exchanger fan shut off, causing system shutdown.	a. Outlet temperature too high.	1. Make sure exhaust and inlet areas are clear of obstructions.
	b. Circuit breaker failure (CV1 or CB2).	2. Repair or replace components.
Temperature controller indicates zero, and system shuts down due to low-temperature condition.	Controller circuit open.	Replace or repair controller, or wiring to the SCR or SCR trigger circuits.
Blower low flow annunciates immediately after actuating HS-1.	Containment isolation valves are partially or completely closed; V1, V2, or V3 closed.	Make sure containment valves V1, V2, and V3 are open.
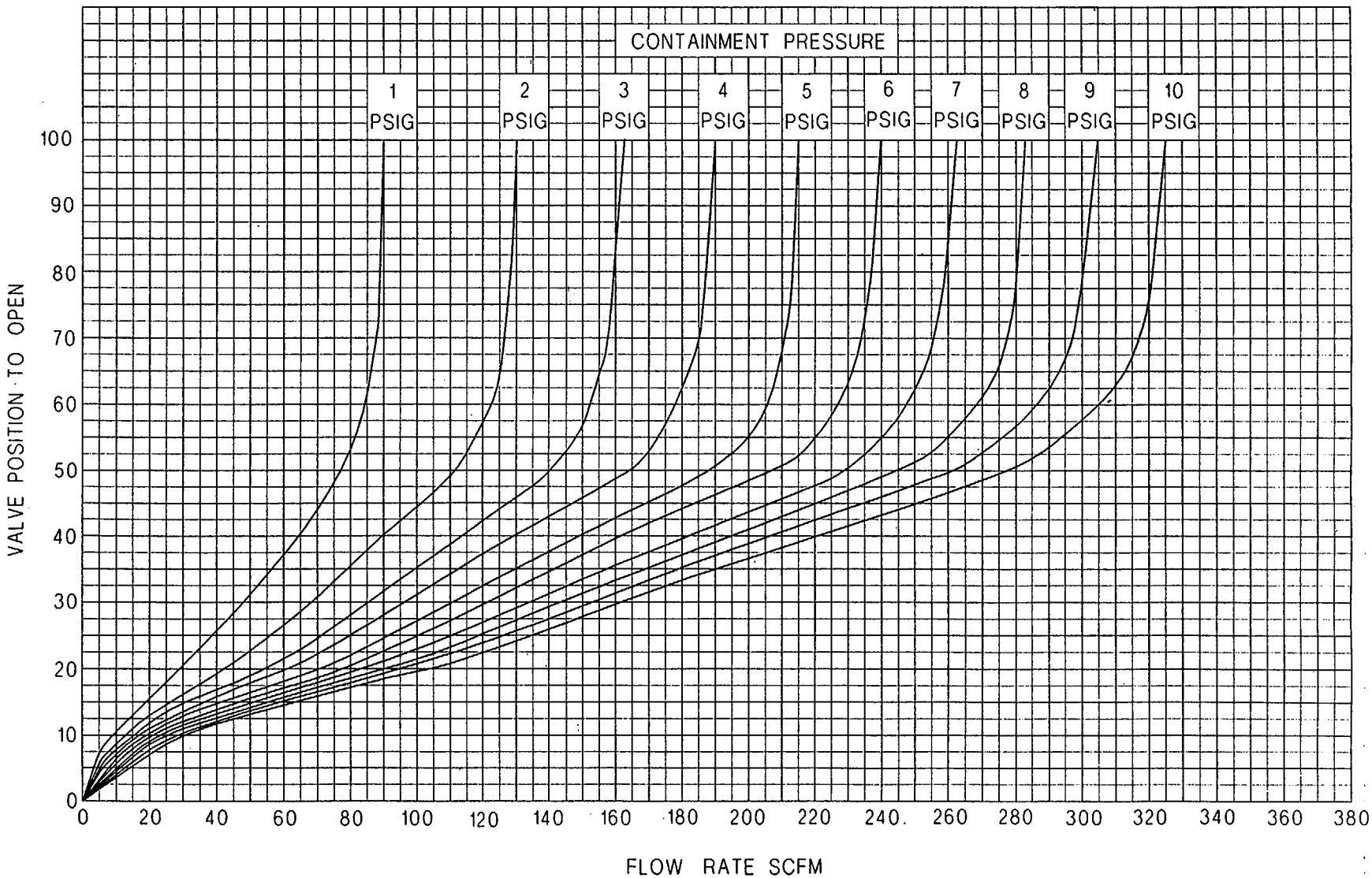
ATTACHMENT E
POST ACCIDENT CONTAINMENT VENTING RATE