NRC FORM 464 Part I
(6-1998)

U.S. NUCLEAR REGULATORY COMMISSION

RESPONSE TO FREEDOM OF INFORMATION ACT (FOIA) / PRIVACY ACT (PA) REQUEST

FOIA/PA	RESPONSE NUMBER
2000-0186	1

RESPONSE TYPE: FINAL ✓ PARTIAL

REQUESTER: Paul Gunter

DATE: JUN 14 2000

PART I. -- INFORMATION RELEASED

- No additional agency records subject to the request have been located.
- Requested records are available through another public distribution program. See Comments section.
- APPENDICES — Agency records subject to the request that are identified in the listed appendices are already available for public inspection and copying at the NRC Public Document Room.
- ✓ APPENDICES A — Agency records subject to the request that are identified in the listed appendices are being made available for public inspection and copying at the NRC Public Document Room.
- Enclosed is information on how you may obtain access to and the charges for copying records located at the NRC Public Document Room, 2120 L Street, NW, Washington, DC.
- ✓ APPENDICES A — Agency records subject to the request are enclosed.
- Records subject to the request that contain information originated by or of interest to another Federal agency have been referred to that agency (see comments section) for a disclosure determination and direct response to you.
- We are continuing to process your request.
- See Comments.

PART I.A -- FEES

AMOUNT *		
	You will be billed by NRC for the amount listed.	None. Minimum fee threshold not met.
$	You will receive a refund for the amount listed.	Fees waived.

* See comments for details

PART I.B -- INFORMATION NOT LOCATED OR WITHHELD FROM DISCLOSURE

- No agency records subject to the request have been located.
- ✓ Certain information in the requested records is being withheld from disclosure pursuant to the exemptions described in and for the reasons stated in Part II.
- ✓ This determination may be appealed within 30 days by writing to the FOIA/PA Officer, U.S. Nuclear Regulatory Commission, Washington, DC 20555-0001. Clearly state on the envelope and in the letter that it is a "FOIA/PA Appeal."

PART I.C COMMENTS (Use attached Comments continuation page if required)

SIGNATURE - FREEDOM OF INFORMATION ACT AND PRIVACY ACT OFFICER

Carol Ann Reed *Carol Ann Reed*

NRC FORM 464 Part II (6-1998) U.S. NUCLEAR REGULATORY COMMISSION

RESPONSE TO FREEDOM OF INFORMATION ACT (FOIA) / PRIVACY ACT (PA) REQUEST

FOIA/PA 2000-0186

DATE JUN 14 2000

PART II.A – APPLICABLE EXEMPTIONS

APPENDICES B

Records subject to the request that are described in the enclosed Appendices are being withheld in their entirety or in part under the Exemption No.(s) of the PA and/or the FOIA as indicated below (5 U.S.C. 552a and/or 5 U.S.C. 552(b)).

- [ ] Exemption 1: The withheld information is properly classified pursuant to Executive Order 12958.
- [ ] Exemption 2: The withheld information relates solely to the internal personnel rules and procedures of NRC.
- [ ] Exemption 3: The withheld information is specifically exempted from public disclosure by statute indicated.
  - [ ] Sections 141-145 of the Atomic Energy Act, which prohibits the disclosure of Restricted Data or Formerly Restricted Data (42 U.S.C. 2161-2165).
  - [ ] Section 147 of the Atomic Energy Act, which prohibits the disclosure of Unclassified Safeguards Information (42 U.S.C. 2167).
  - [ ] 41 U.S.C., Section 253(b), subsection (m)(1), prohibits the disclosure of contractor proposals in the possession and control of an executive agency to any person under section 552 of Title 5, U.S.C. (the FOIA), except when incorporated into the contract between the agency and the submitter of the proposal.
- [ ] Exemption 4: The withheld information is a trade secret or commercial or financial information that is being withheld for the reason(s) indicated.
  - [ ] The information is considered to be confidential business (proprietary) information.
  - [ ] The information is considered to be proprietary because it concerns a licensee's or applicant's physical protection or material control and accounting program for special nuclear material pursuant to 10 CFR 2.790(d)(1).
  - [ ] The information was submitted by a foreign source and received in confidence pursuant to 10 CFR 2.790(d)(2).
- [x] Exemption 5: The withheld information consists of interagency or intraagency records that are not available through discovery during litigation. Applicable privileges:
  - [x] Deliberative process: Disclosure of predecisional information would tend to inhibit the open and frank exchange of ideas essential to the deliberative process. Where records are withheld in their entirety, the facts are inextricably intertwined with the predecisional information. There also are no reasonably segregable factual portions because the release of the facts would permit an indirect inquiry into the predecisional process of the agency.
  - [ ] Attorney work-product privilege. (Documents prepared by an attorney in contemplation of litigation)
  - [ ] Attorney-client privilege. (Confidential communications between an attorney and his/her client)
- [ ] Exemption 6: The withheld information is exempted from public disclosure because its disclosure would result in a clearly unwarranted invasion of personal privacy.
- [ ] Exemption 7: The withheld information consists of records compiled for law enforcement purposes and is being withheld for the reason(s) indicated.
  - [ ] (A) Disclosure could reasonably be expected to interfere with an enforcement proceeding (e.g., it would reveal the scope, direction, and focus of enforcement efforts, and thus could possibly allow recipients to take action to shield potential wrongdoing or a violation of NRC requirements from investigators).
  - [ ] (C) Disclosure would constitute an unwarranted invasion of personal privacy.
  - [ ] (D) The information consists of names of individuals and other information the disclosure of which could reasonably be expected to reveal identities of confidential sources.
  - [ ] (E) Disclosure would reveal techniques and procedures for law enforcement investigations or prosecutions, or guidelines that could reasonably be expected to risk circumvention of the law.
  - [ ] (F) Disclosure could reasonably be expected to endanger the life or physical safety of an individual.
- [ ] OTHER (Specify)

PART II.B – DENYING OFFICIALS

Pursuant to 10 CFR 9.25(g), 9.25(h), and/or 9.65(b) of the U.S. Nuclear Regulatory Commission regulations, it has been determined that the information withheld is exempt from production or disclosure, and that its production or disclosure is contrary to the public interest. The person responsible for the denial are those officials identified below as denying officials and the FOIA/PA Officer for any denials that may be appealed to the Executive Director for Operations (EDO).

DENYING OFFICIAL	TITLE/OFFICE	RECORDS DENIED	APPELLATE OFFICIAL		
			EDO	SECY	IG
Ashok C. Thadani	Director, Office of Nuclear Regulatory Research	Appendix B	✓		

Appeal must be made in writing within 30 days of receipt of this response. Appeals should be mailed to the FOIA/Privacy Act Officer, U.S. Nuclear Regulatory Commission, Washington, DC 20555-0001, for action by the appropriate appellate official(s). You should clearly state on the envelope and letter that it is a "FOIA/PA Appeal."

APPENDIX A
RECORDS BEING RELEASED IN THEIR ENTIRETY

NO.	DATE	DESCRIPTION/(PAGE COUNT)
1.	2/8/00	Risk Associated with IGSCC-Induced Failure of BWR Internals (30 pages)
2.	10/26/99	Synergistic Failures of BWR Internals (28 pages)

APPENDIX B
RECORDS BEING WITHHELD IN THEIR ENTIRETY

NO.	DATE	DESCRIPTION/(PAGE COUNT)/EXEMPTIONS
1.	12/99	Draft, Evaluation of Risk Associated with Intergranular Stress Corrosion Cracking in Boiling Water Reactor Internals (260 pages) **EX. 5**
2.	3/31/99	3/31/99 Letter to T Chang from A Ware enclosing Draft Preliminary Risk Analysis of Failures of Jet Pumps in Boiling Water Reactors (42 pages) EX.5

RISK ASSOCIATED WITH IGSCC-INDUCED FAILURE OF BWR INTERNALS

Principal Investigator: A.G. Ware
Idaho National Engineering & Environmental Laboratory
Idaho Falls, ID USA

NRC Program Manager: T.Y. Chang
United States Nuclear Regulatory Commission
Washington, DC USA

Presented to NRC Staff
Rockville, MD
February 8, 2000

A11

BACKGROUND

- Program objective is to assess the potential risk associated with the failure of Intergranular Stress Corrosion Cracking (IGSCC)-susceptible Boiling Water Reactor (BWR) vessel internals components, both singly and in combination with the failures of others

- Focus is on mechanical design, failure locations, consequences, potential accident scenarios, and characterization of risk

- Only degradation mechanism considered is IGSCC, including contributing SCC mechanisms such as irradiation-assisted SCC (IASCC)
  - other degradation mechanisms such as fatigue can act synergistically with IGSCC in that a crack which is initiated by IGSCC can propagate to failure from fatigue

BACKGROUND (Continued)

- NRC investigating causes and contributing aspects of the IGSCC problem in separate programs

- Industry groups are investigating inspection, mitigation, repair, and replacement, as well as the causes and contributing aspects of IGSCC

- First phase of program
  - gathered background information
  - identified potential accident sequences

- Second phase of program
  - initially, jet pump failures studied to develop methodology
  - potential accident sequences that could develop from failures of remaining reactor vessel internals investigated to assess risk

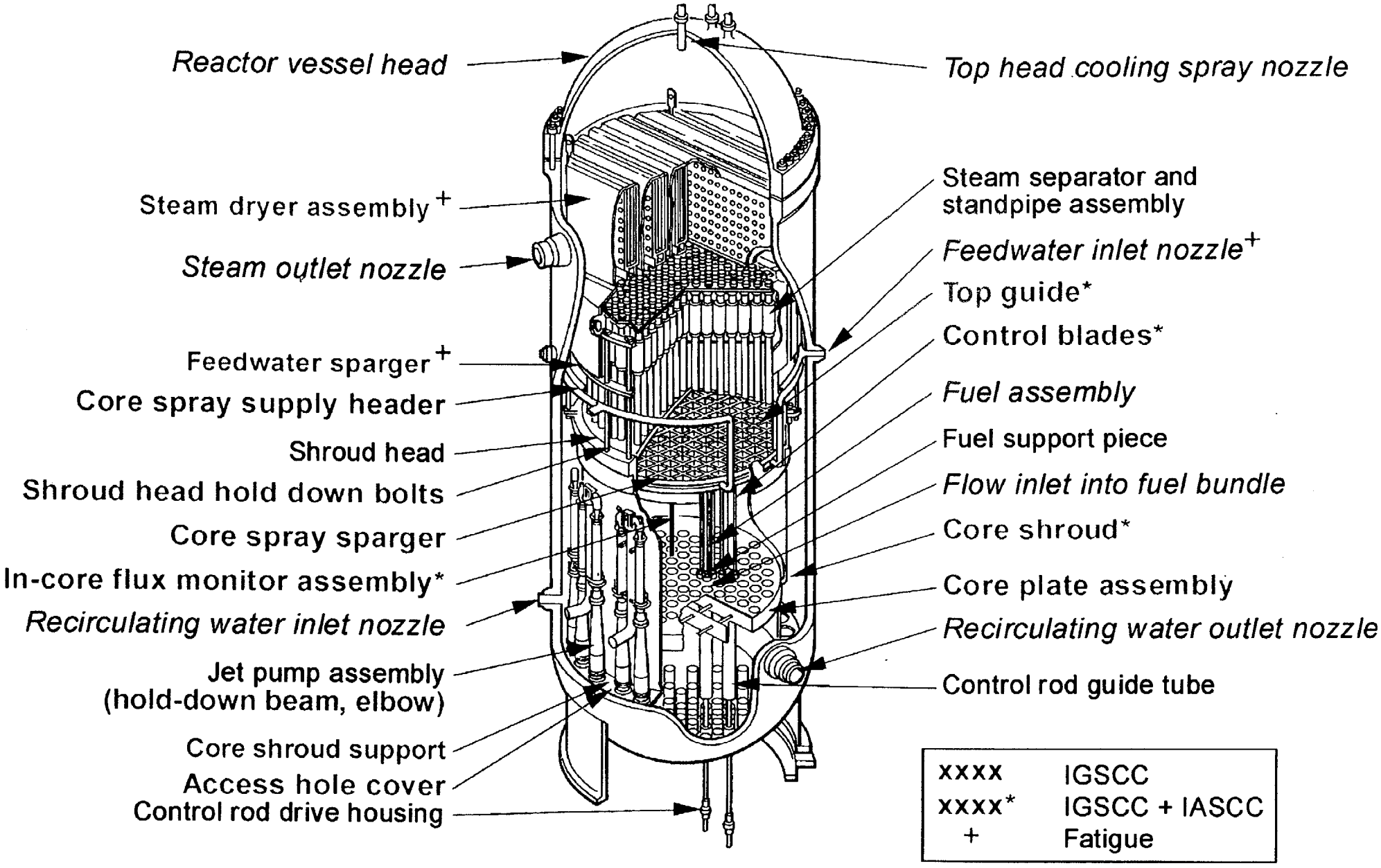
Reactor vessel head
Steam dryer assembly +
Steam outlet nozzle
Feedwater sparger +
Core spray supply header
Shroud head
Shroud head hold down bolts
Core spray sparger
In-core flux monitor assembly*
Recirculating water inlet nozzle
Jet pump assembly
(hold-down beam, elbow)
Core shroud support
Access hole cover
Control rod drive housing
Top head cooling spray nozzle
Steam separator and
standpipe assembly
Feedwater inlet nozzle+
Top guide*
Control blades*
Fuel assembly
Fuel support piece
Flow inlet into fuel bundle
Core shroud*
Core plate assembly
Recirculating water outlet nozzle
Control rod guide tube
xxxx IGSCC
xxxx* IGSCC + IASCC
+ Fatigue
GC00 0048

PROGRAM DIFFICULTIES

- Large number of components and failure sequences
- Different types of BWRs
- Difficulty in estimating crack sizes and growth rates
- Large number of disciplines involved
- Limited "good" probabilistic risk assessment (PRA) and thermal-hydraulic models available
- No failure data (to assist in estimating probabilities) are available for many of the variables

RESEARCH SCOPE NARROWED

- Single plant selected for study
- Single component and probable failure locations selected for initial calculations
- Minimal, scoping calculations performed
- Methodology developed to introduce IGSCC-induced failures into existing PRA; then apply to failure of any vessel internals component
- Existing TRAC-B thermal-hydraulics model converted to selected plant
- Failure probabilities estimated
- Expert panels used to critique methods, offer suggestions for approach, and help in estimating probabilities and uncertainties

PLANT SELECTION

- Several criteria used to select plant for study
  - is there an existing PRA model for the plant (internal and external events)
  - is there an existing TRAC-B model for the plant (or one for a similar plant)
  - is the plant typical
  - older plants preferred

- Peach Bottom chosen for study
  - high-power BWR/4, most representative type
  - fairly good (but not ideal) PRA
  - existing BWR/4 TRAC-B thermal-hydraulics model (could be modified for selected plant)
  - selected plant does not have core shroud tie rod repair

INITIAL COMPONENT SELECTION

- Several criteria used to select a specific reactor internals component for study
  - degradation to date
  - cascading possibilities
  - safety significance
  - typicality

- Jet pump selected for study
  - recently discovered cracking in jet pump riser inlet welds
  - IGSCC failures also initiated at holddown beams
  - jet pump failure could lead to variety of cascading failure sequences
  - several nearby components might be impacted by an unrestrained jet pump, so potentials for cascading failures

- Qualitative analysis in first phase identified 27 sequences initiating from failure of one of the several jet pump subcomponents

CHANGES TO MODEL

- NUREG-1150 model chosen

- Three general areas for changes
  - addition/modification of event trees (internal events only)
  - incorporation of newer Individual Plant Examination (IPE) and other data for selected basic events and initiating events
  - use of a newer seismic hazard curve

- In order to model IGSCC events in detail, the single large LOCA event tree in the NUREG-1150 internal events model was replaced with three large loss-of-coolant (LOCA) event trees
  - recirculation line break (RLB)
  - main steamline break
  - feedwater line break

METHODOLOGY

- BWRVIP (U.S. industry group) provided much useful information to NRC that was used in the study
  - broad scope of investigations conducted by BWRVIP not duplicated
  - BWRVIP material, drawings from Peach Bottom plant reviewed

- Advice of two expert panels used
  - structural and PRA methodology and assumptions
  - crack growth rates

- TRAC-B thermal-hydraulics calculations conducted by Scientech

- PRA screening criterion developed
  - Regulatory Guide 1.174 used as guidance
  - increase in core-damage frequency (CDF) of 5E-6/yr or more chosen as criterion for determining whether IGSCC of BWR internals is potentially significant safety issue
  - change represents 10% of BWR representative total CDF of 5E-5/yr
  - screening threshold of 1E-7/yr chosen for each sequence

METHODOLOGY (Continued)

- Jet pump failure rates estimated
- Crack growth rates estimated
- Engineering judgement and expert opinion used to quantify many of the parameters for which no specific data were available
- Structural evaluations conducted
  - structural failure estimates made primarily based on simple impact calculations
- Results evaluated vs. screening criterion

STRUCTURAL EVALUATION

- Assumed jet pump failure initiates at most likely places: holddown beams, inlet riser

- Considered potential targets that could be struck by dislodged components of interest, and routes through which jet pump loose parts could migrate to the lower plenum

- Safety concern that could result from failed components are basically effect on reactor protection system (RPS), i.e., failure of control rods to insert, and diversion of coolant from the core

- Two types of loose parts considered
  - large parts that could result in cascading failure
  - smaller parts that could migrate to the lower plenum and result in failure of part of the RPS or isolated direct fuel damage

STRUCTURAL ANALYSIS SCREENING RESULTS

- Structural analysis shows should jet pump riser separate, insufficient forces to fail riser braces and dislodge upper jet pump assembly
- If holddown beams fail, upper jet pump would become dislodged; for diffuser to fail, welds attaching diffuser to baffle plate would have to fail
- Insufficient energy for failed jet pump parts to thrust upward to the core spray lines and beyond to cause damage
- Impact would not fail thick components such as core shroud
- Impact would not fail adjacent jet pump unless the riser had a circumferential crack of 50% wall thickness or greater
- Tie rod would not fail from impact by dislodged jet pump unless the end connections release

SEISMIC EVALUATION RESULTS

- Mean frequencies for various ground level accelerations taken from selected plant seismic hazard curve

- Ground level acceleration values multiplied by amplification factor between ground level and elevation at jet pump support to arrive at jet pump accelerations

- For accelerations approaching the screening value
  - uniform crack of over 1/2 the holddown beam height would have to exist
  - for the inlet riser, completely circumferential crack would have to be almost entirely throughwall
  - therefore, unless the jet pump is severely degraded by IGSCC, seismic scenarios are screened

LOOSE PARTS RESULTS

- Assigning probability to migrating loose parts has very high uncertainty
- Best-estimate for loose jet pump parts was made
- From past history, most likely subcomponent to fail is jet pump holddown beam
  - only small part could complete migration path to inside control rod guide tube blocking fuel channel, control rod
  - assumed that loose part is a holddown beam
- If holddown beam fails, the two mixing assemblies of affected jet pump may lift off and broken pieces may pass through opening at diffuser upper end if opening is not blocked by loose mixing assembly or other loose components

LOOSE PARTS RESULTS (Continued)

- Three main factors determine whether broken pieces of holddown beam will pass through opening and to lower vessel head: size of loose parts, their velocity (speed and direction), and any blockage of the opening

- Based mainly on engineering judgement, we concluded that loose parts causing damage to fuel was below screening level

NORMAL OPERATION CASE RESULTS

- Normal operation
  - failures and cracking have occurred in jet pump components
  - mitigation efforts and increased inspections undertaken
  - jet pump could fail during normal operation; probability of 2 random jet pump pair failures at same time below screening value
  - if jet pump fails, could impact an adjacent jet pump or a baffle cover plate, and dislodge them if their IGSCC degradation was sufficiently severe
  - with other systems intact, and operator action to shut down plant, no significant increase in CDF expected
  - dislodged jet pump could impact a tie rod; we had insufficient information to determine whether this could cause tie rod end connections to disconnect
  - estimates of loose parts causing flow blockage of coolant to the fuel or inhibiting control rod motion are below the screening value

ACCIDENT AND SEISMIC CASES RESULTS

- Main steam and feedwater line breaks
  - below screening value

- Recirculation line break
  - probability of both suction side recirculation line break and jet pump failure above the screening value
  - assuming operability of low pressure core spray (LPCS) system, event screens out

- Seismic event
  - jet pump could fail during seismic event if it were already severely degraded by IGSCC
  - event screened out based on degree of degradation necessary
  - failure consequences same as for a random failure

EXTENSION TO OTHER COMPONENTS

- Methodology applied to the remaining components
- 148 sequences identified in initial phase included any plausible damage from any of the reactor internals for all BWR types, without regard to safety analysis or PRA results
- Sequences reduced to more manageable number, using the following:
  - some sequences did not affect BWR/4s
  - some could immediately be screened from the PRA
  - some involved loose parts
  - safety studies have shown that for core damage to occur, approximately 1/3 of the control rods would have to fail to insert on random basis, or 5 to 10 control rods grouped together
  - for some events involving SBLOCA, plant makeup system could easily supply makeup

EXTENSION TO OTHER COMPONENTS (CONTINUED)

- Only a few remaining sequences are considered major
  - involve either reactivity accident or diversion or loss of coolant to the core
  - involve the most important internals, such as the core shroud, core plate, top guide, and core spray system
  - initiators are line breaks and seismic events

- Inspection crack detection probabilities, crack growth rates, and structural calculations used to provide estimates of these probabilities as input to the PRA

STRUCTURAL EVALUATIONS

- Calculations for seismic and line break events showed components would not fail unless severely cracked

- In general, large component interaction (e.g., missiles, impact) with other components would not damage other components' functionality unless they were already severely cracked
  - however, movement of core plate, core shroud support could crimp SLC line

COMPONENT FAILURE PROBABILITY

$$\text{Probability of failure} = P_{ci} \times P_g \times P_{ie} \times P_{mbi}$$

where:

P_{ci} = probability of crack initiation

P_g = probability of crack growth through wall and around circumference until critical crack size for dynamic loads is reached

P_{ie} = probability of initiating event

P_{mbi} = probability of crack missed by inspection

PROBABILITY OF CRACK INITIATION

- Many locations in BWR internals with conditions needed for IGSCC
- Cracking detected at many locations
- Since this is aging phenomenon, can expect initiation at more locations/components at 40 or 60 years
- Consequently, P_{ci} is high, assume ~ 1

PROBABILITY OF CRACK GROWTH

- Mean and upper-bound growth rates developed by expert panel
- Does not account for IASCC (experts say there are presently insufficient data to arrive at quantitative effect)
- As crack progresses through wall, residual stress at crack tip changes and growth rate changes; may even arrest
- Cracks may initiate at similar locations around circumference, then link
- State-of-the-art does not permit estimate of stages of crack growth, but since growth does occur, assume P_g is high, ~ 1

PROBABILITY OF INITIATING EVENT

RLB	=	1×10^{-4} events/yr	(NUREG-1150)
RLB (suction side)	=	2.3×10^{-5} events/yr	
FWLB, MSLB	=	3.3×10^{-7} events/yr	
Seismic event	=	1.1×10^{-3} events/yr	(> 0.05 g)
	=	4.8×10^{-5} events/yr	(> 0.30 g)
Seismic event	=	1.6×10^{-5} events/yr	(> 0.05 g)
with loss of ECCS	=	1.5×10^{-5} events/yr	(> 0.30 g)
Seismic event	=	2.1×10^{-5} events/yr	(> 0.05 g)
with loss of SLC	=	1.4×10^{-5} events/yr	(> 0.30 g)

PROBABILITY CRACK MISSED BY INPSECTION

- Literature search and discussions with knowledgeable consultants indicates probability of detection (POD) good and improving
- PNNL staff estimates POD for BWR reactor internals 0.8 ± 0.2
- BWRVIP has developed comprehensive aging management plan: inspection, monitoring, analysis, repair, and replacement
- USNRC/NRR staff conducting thorough evaluations of BWRVIP submittals
- Probability of managing discovered cracks very high, assume ~ 1

PROBABILITY CRACK MISSED BY INSPECTION (CONTINUED)

- When crack detected in one location, similar locations also inspected
- When crack detected in one BWR, similar locations at other BWRs also inspected
- For multiple failures to occur, inspections would have to miss very severe cracking in several components as well as having ineffective monitoring; probability of this is estimated to be small, $< 10^{-2}$, for example
  - common mode failure such as multiple control rod blades, CRDs, in-core housings, core plate bolts, or top guide beams during seismic event
  - jet pump or access hole cover plus two core spray lines during RLB

SUMMARY

- Methodology developed for estimating increase in risk caused by IGSCC-induced failures of BWR vessel internals components
- PRA model modified
- Conclusion from applying screening criterion is that scenarios resulting from IGSCC-induced failures of jet pumps will not result in significant increase in CDF (i.e., $< 5 \times 10^{-6}$ events/yr) with inspection/repair
- Methodology applied to other reactor internals components to estimate increase in overall risk

CONCLUSIONS

- IGSCC has been detected at many locations in BWR reactor internals.
- IGSCC cracking is expected to continue as the plants age.
- Consequently, the probability of developing IGSCC cracks in reactor internals is assumed to be 1.
- With no inspection, monitoring, or repair, there are a number of internals, if severely degraded by IGSCC, that could fail either in a common mode or cascading manner, leading to an inability to insert rods or cool the core in the event of a severe internal or external event.
- With no credit for inspection, monitoring, and repair, and a probability of significant cracks developing of 1, coupled with the initiating event frequencies and system failure frequencies in the PRA studied, an undesirable increase ($> 5 \times 10^{-6}$ events/yr) in the plant CDF is predicted.

CONCLUSIONS (CONTINUED)

- **The BWRVIP submittals have been reviewed, independent confirmatory assessments and analyses have been performed, and probability estimates have been made for cascading events. The calculations and estimates in the documents submitted by the BWRVIP appear reasonable.**

- **With the current BWRVIP inspection, monitoring, and repair proposals, there is expected to be no significant increase in CDF ($< 5 \times 10^{-6}$ events/yr) caused by failures of BWR internals. That is, IGSCC problems can be identified and evaluated or corrected, to preclude a significant increase in the CDF.**

- **The BWRVIP program of IGSCC aging management of BWR reactor internals, including inspection, monitoring, and repair, along with NRC/NRR review of the BWRVIP activities, creates an atmosphere of acceptable risk for continued BWR operation.**

Synergistic Failure Of BWR Internals

A.G. Ware
Idaho National Engineering & Environmental Laboratory
Idaho Falls, ID USA

T.Y. Chang
United States Nuclear Regulatory Commission
Washington, DC USA

Presented at
27th Water Reactor Safety Meeting,
Bethesda, MD
October 26, 1999

INEEL
Idaho National Engineering & Environmental Laboratory
BECHTEL BWXT IDAHO, LLC

A/2

Background

- Program objective is to assess the potential risk associated with the failure of Intergranular Stress Corrosion Cracking (IGSCC)-susceptible Boiling Water Reactor (BWR) vessel internals components, both singly and in combination with the failures of others

- Focus is on mechanical design, failure locations, consequences, potential accident scenarios, and characterization of risk

- Only degradation mechanism considered is IGSCC, including contributing SCC mechanisms such as irradiation-assisted SCC (IASCC)
  - other degradation mechanisms such as fatigue can act synergistically with IGSCC in that a crack which is initiated by IGSCC can propagate to failure from fatigue

Background (continued)

- NRC investigating causes and contributing aspects of the IGSCC problem in separate programs

- Industry groups are investigating inspection, mitigation, repair, or replacement, as well as the causes and contributing aspects of IGSCC

- First phase of program has been completed
  - gathered background information
  - identified potential accidents sequences

- Second phase initiated to perform risk analysis
  - initially, jet pump failures studied to develop methodology
  - currently, potential accident sequences that could develop from failures of remaining reactor vessel internals being investigated

IGSCC Detected in Several Components

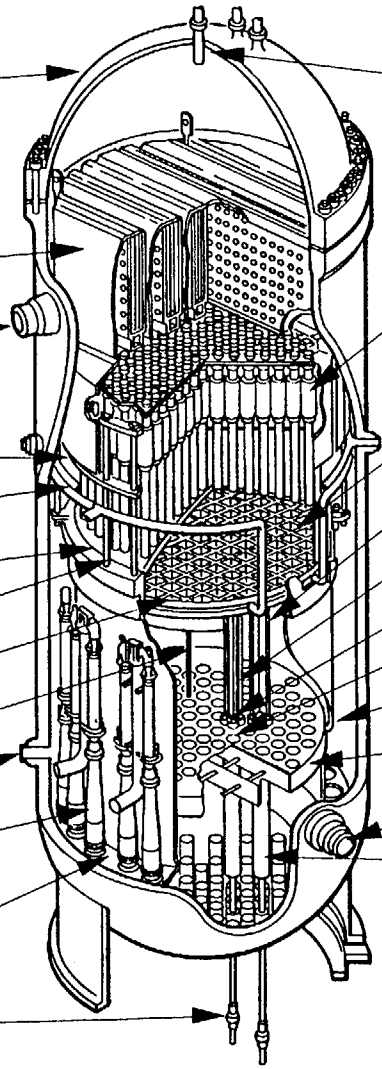

XXXX	IGSCC
XXXX*	IGSCC + IASCC
+	Fatigue

GC99 0582

GC99 0597 4

Program Difficulties

- Large number of components and failure sequences
- Different types of BWRs
- Difficulty in estimating crack sizes and growth rates
- Large number of disciplines involved
- Limited "good" probabilistic risk assessment (PRA) and thermal-hydraulic models available
- No failure data (to assist in estimating probabilities) are available for many of the variables

Research Scope Narrowed

- Single plant selected for study
- Single component and probable failure locations selected for initial calculations
- Minimal, scoping calculations performed
- Methodology developed to introduce IGSCC-induced failures into existing PRA; then apply to failure of any vessel internals component
- Existing TRAC-B thermal-hydraulics model converted to selected plant
- Failure probabilities estimated
- Expert panels used to critique methods, offer suggestions for approach, and help in estimating probabilities and uncertainties

Plant Selection

- Several criteria used to select plant for study
  - is there an existing PRA model for the plant (internal and external events)
  - is there an existing TRAC-B model for the plant (or one for a similar plant)
  - is the plant typical
  - older plants preferred

- BWR/4 chosen for study
  - high-power BWR/4, most representative type
  - fairly good (but not ideal) PRA
  - existing BWR/4 TRAC-B thermal-hydraulics model (could be modified for selected plant)
  - selected plant does not have core shroud tie rod repair

Initial Component Selection

- Several criteria used to select a specific reactor internals component for study
  - degradation to date
  - cascading possibilities
  - safety significance
  - typicality

- Jet pump selected for study
  - recently discovered cracking in jet pump riser inlet welds
  - IGSCC failures also initiated at holddown beams
  - jet pump failure could lead to variety of cascading failure sequences
  - several nearby components might be impacted by an unrestrained jet pump, so potentials for cascading failures

- Qualitative analysis in first phase identified 27 sequences initiating from failure of one of the several jet pump subcomponents

Changes to Model

- NUREG-1150 model chosen

- Three general areas for changes
  - addition/modification of event trees (internal events only)
  - incorporation of newer Individual Plant Examination (IPE) and other data for selected basic events and initiating events
  - use of a newer seismic hazard curve

- In order to model IGSCC events in detail, the single large LOCA event tree in the NUREG-1150 internal events model was replaced with three large loss-of-coolant (LOCA) event trees
  - recirculation line break (RLB)
  - main steamline break
  - feedwater line break

Methodology

- BWRVIP (U.S. industry group) provided much useful information to NRC that was used in the study
  - broad scope of investigations conducted by BWRVIP not duplicated
  - material provided by the BWRVIP, drawings from selected plant reviewed

- Advice of two expert panels used
  - structural and PRA methodology and assumptions
  - crack growth rates

- TRAC-B thermal-hydraulics calculations conducted by Scientech

- PRA screening criterion developed
  - increase in core-damage frequency (CDF) of 5E-6/yr or more chosen as criterion for determining whether IGSCC of BWR internals is potentially significant safety issue
  - change represents 10% of BWR representative total CDF of 5E-5/yr
  - screening threshold of 1E-7/yr chosen for each sequence

Methodology (continued)

- Jet pump failure rates estimated
- Crack growth rates estimated
- Engineering judgement and expert opinion used to quantify many of the parameters for which no specific data were available
- Structural evaluations conducted
  - structural failure estimates made primarily based on simple impact calculations
- Results evaluated vs. screening criterion

Structural Evaluation

- Assumed jet pump failure initiates at most likely places: holddown beams, inlet riser

- Considered potential targets that could be struck by dislodged components of interest, and routes through which jet pump loose parts could migrate to the lower plenum

- Safety concern that could result from failed components are basically effect on reactor protection system (RPS), i.e., failure of control rods to insert, and diversion of coolant from the core

- Two types of loose parts considered
  - large parts that could result in cascading failure
  - smaller parts that could migrate to the lower plenum and result in failure of part of the RPS or isolated direct fuel damage

Structural Analysis Screening Preliminary Results

- Structural analysis shows should jet pump riser separate, insufficient forces to fail riser braces and dislodge upper jet pump assembly
- If holddown beams fail, upper jet pump would become dislodged; for diffuser to fail, welds attaching diffuser to baffle plate would have to fail
- Insufficient energy for failed jet pump parts to migrate upward to the core spray lines and beyond to cause damage
- Impact on thick components such as core shroud would not fail them
- Impact would not fail adjacent jet pump unless the riser had a circumferential crack of 50% wall thickness or greater
- Tie rod would not fail from impact by dislodged jet pump unless end connections release

Seismic Evaluation Preliminary Results

- Mean frequencies for various ground level accelerations taken from selected plant seismic hazard curve

- Values multiplied by amplification factor between ground level and elevation at jet pump support

- For accelerations approaching the screening value
  - uniform crack of over 1/2 the holddown beam height would have to exist
  - for the inlet riser, completely circumferential crack would have to be almost entirely throughwall
  - therefore, unless the jet pump is severely degraded by IGSCC, seismic scenarios are screened

Loose Parts Preliminary Results

- Assigning probability to migrating loose parts has very high uncertainty

- Best-estimate for loose jet pump parts was made

- From past history, most likely subcomponent to fail is jet pump holddown beam
  - only small part could complete migration path to inside control rod guide tube blocking fuel channel, control rod
  - assumed that loose part is a holddown beam

- If holddown beam fails, the two mixing assemblies of affected jet pump may lift off and broken pieces may pass through opening at diffuser upper end if opening is not blocked by loose mixing assembly or other loose components

Loose Parts Preliminary Results (continued)

- Three main factors determine whether broken pieces of holddown beam will pass through opening and to lower vessel head: size of loose parts, their velocity (speed and direction), and any blockage of the opening

- Based mainly on engineering judgement, we concluded that loose parts causing damage to fuel was below screening level

Normal Operation Case Preliminary Results

- Normal operation
  - failures and cracking have occurred in jet pump components
  - mitigation efforts and increased inspections undertaken
  - jet pump could fail during normal operation; probability of 2 random jet pump failures at same time below screening value
  - if jet pump fails, could impact an adjacent jet pump or a baffle cover plate, and dislodge them if their IGSCC degradation was sufficiently severe
  - with other systems intact, and operator action to shut down plant, no significant increase in CDF expected
  - dislodged jet pump could impact a tie rod
  - estimates of loose parts causing flow blockage of coolant to the fuel or inhibiting control rod motion are below the screening value

Accident and Seismic Cases Preliminary Results

- Main steam and feedwater line breaks
  - below screening value

- Recirculation line break
  - probability of both recirculation line break and jet pump failure above the screening value
  - assuming operability of low pressure core spray (LPCS) system, event screens out

- Seismic event
  - jet pump could fail during seismic event if it were already severely degraded by IGSCC
  - event screened out based on degree of degradation necessary
  - failure consequences same as for a random failure

Extension to Other Components

- Methodology being applied to the remaining components

- 148 sequences identified in initial phase included any plausible damage from any of the reactor internals for all BWR types, without regard to safety analysis or PRA results

- Sequences reduced to more manageable number, using the following:
  - some sequences did not affect BWR/4s
  - some could immediately be screened from the PRA
  - some involved loose parts
  - safety studies have shown that for core damage to occur, approximately 1/3 of the control rods would have to fail to insert on random basis, or 5 to 10 control rods grouped together
  - for some events involving SBLOCA, plant makeup system could easily supply makeup

Extension to Other Components (continued)

- Only a few remaining sequences are considered major
  - involve either reactivity accident or diversion or loss of coolant to the core
  - involve the most important internals, such as the core shroud, core plate, top guide, and core spray system
  - initiators are line breaks and seismic events

- Inspection crack detection probabilities, crack growth rates, and structural calculations currently being used to provide estimates of these probabilities as input to the PRA

Summary

- Methodology developed for estimating increase in risk caused by IGSCC-induced failures of BWR vessel internals components
- PRA model modified
- Preliminary conclusion from applying screening criterion is that scenarios resulting from IGSCC-induced failures of jet pumps will not result in significant increase in CDF
- Methodology now being applied to other reactor internals components to estimate increase in overall risk

SYNERGISTIC FAILURE OF BWR INTERNALS

A.G. Ware
Idaho National Engineering & Environmental Laboratory

T.Y. Chang
U.S. Nuclear Regulatory Commission

Boiling Water Reactor (BWR) core shrouds and other reactor internals important to safety are experiencing intergranular stress corrosion cracking (IGSCC). The United States Nuclear Regulatory Commission has followed the problem, and as part of its investigations, contracted with the Idaho National Engineering and Environmental Laboratory to conduct a risk assessment. The overall project objective is to assess the potential consequences and risks associated with the failure of IGSCC-susceptible BWR vessel internals, with specific consideration given to potential cascading and common mode effects. An initial phase has been completed in which background material was gathered and evaluated, and potential accident sequences were identified. A second phase is underway to perform a simplified, quantitative probabilistic risk assessment on a representative high-power BWR/4. Results of the initial study conducted on the jet pumps show that any cascading failures would not result in a significant increase in the core damage frequency. The methodology is currently being extended to other major reactor internals components.

INTRODUCTION

General Design Criteria 2 and 4 require that commercial nuclear reactor structures, systems, and components important to safety be designed to withstand the effects of natural phenomena, such as earthquakes, and the effects of postulated accidents, including loss-of-coolant accidents (LOCAs). Boiling water reactor (BWR) internals components were originally believed to have been designed to accommodate these requirements. However, intergranular stress corrosion cracking (IGSCC) degradation has been observed in both core shrouds as well as a number of other BWR reactor internals components, many of which are important to plant safety.

Although IGSCC of reactor internals had been recognized for over 20 years, this phenomenon received increased attention, beginning when crack indications were reported at core shroud welds located in the beltline region of an overseas BWR in 1990. The core shroud is a stainless steel cylinder that is located inside the reactor vessel. It serves to both provide lateral support to the reactor core and to direct the flow of water inside the reactor vessel, and is generally regarded as a component whose integrity is critical to maintaining core safety. Later, a visual inspection of a U.S. BWR core shroud revealed crack indications at several weld regions. Subsequently, General Electric and the NRC[1,2,3] issued correspondence regarding core shroud cracking.

In addition to the BWR core shroud degradation, other BWR reactor internals components, including shroud support access hole cover welds, jet pump hold-down beams, core spray systems, and top guides

Work supported by the U.S. Nuclear Regulatory Commission, Office of Nuclear Regulatory Research, under U.S. Department of Energy Contract No. DE-AC07-99ID13727.

have also been experiencing IGSCC degradation over the years.[4] These instances have for the most part been sporadic, were not believed to be of major safety importance, and were addressed by General Electric through notices such as Safety Information Letters (SILs) and by the NRC through Information Notices and a Bulletin that have been issued from time-to-time since about 1980.[5,6,7,8,9,10,11] However, the instances of core shroud cracking served to escalate attention as to the seriousness of the IGSCC problem in BWR reactor internals.

The NRC Office of Nuclear Reactor Regulation has followed the problem and issued a Bulletin, Information Notices, and Safety Evaluation Reports (SERs), as well as a Generic Letter.[2] The primary emphasis has been placed on core shroud degradation, but common mode or cascading failure of other components could also have safety significance. Consequently, this NRC-sponsored program described in this paper has been initiated to conduct a risk assessment investigating the concern of cascading failures of BWR vessel internals.

The objective of the study is to assess the potential consequences associated with the failure of IGSCC-susceptible BWR reactor internals components, both singly and in combination with the failures of others. Specific consideration is given to potential cascading and common mode effects on system performance stemming from cracking of core shrouds and other BWR reactor internals components when subjected to design-basis and beyond-design-basis accident loading conditions such as seismic events.

The focus is on mechanical design, failure locations, consequences, potential accident scenarios, and characterization of risk associated with IGSCC degradation of BWR vessel internals. The scope is limited to the basic risk evaluation, including the following:

- The only degradation mechanism considered in this study is IGSCC, including contributing SCC mechanisms such as irradiation-assisted SCC (IASCC). It is recognized that other degradation mechanisms such as fatigue can act synergistically with IGSCC in that a crack which is initiated by IGSCC can propagate to failure from fatigue.

- The NRC is investigating the causes and contributing aspects of the IGSCC problem in separate programs. Industry groups are investigating inspection, mitigation, repair, or replacement, as well as the causes and contributing aspects of IGSCC.

- There are five currently operating types of BWRs in the U.S., designated BWR/2 through BWR/6. Since there is only a single BWR/1 in operation, Big Rock Point, and it is expected to be decommissioned in the near future, the scope of work in this study does not include the unique BWR/1.

BACKGROUND

The three basic elements that must *all* be present for IGSCC to occur are:

1. a susceptible material
2. a chemically aggressive environment
3. a high tensile stress

Under normal circumstances, the stress must be above the yield stress, which can occur at locations such as residual stresses around welds. However, if certain other factors are present, the conditions for the three basic elements listed above (such as the need for the tensile stress to be above the yield stress), may be somewhat altered.

INITIAL PROGRAM PHASE

The first phase of the study involved acquiring and evaluating relevant background information on IGSCC of BWR reactor internals, to qualitatively assess potential accident scenarios, and to identify scenarios for detailed analyses, that is, those expected to have large effects on Core Damage Frequency (CDF). This phase has been completed.

Accident Sequences

Differences in reactor internals designs and accident mitigation systems for the various BWR types were categorized, the degradation of BWR internals to date was catalogued, and management practices to deal with aging were reviewed. From this background study, various types of *systems* failure modes that could result from simultaneous common mode failures of various combinations of reactor internals were catalogued. This included the consideration of functional losses or significant degradations of certain inside-reactor vessel systems. A similar assessment for various types of *mechanistic* failure modes (i.e., the potential results of physical impacts/interactions, common mode and cascading failures, etc., between various reactor internals components due to failures and/or degradations of the components that are subject to IGSCC degradation), was made. This included the various ways that these components might fail and how those types of failures might affect other components inside the reactor vessel. Approximately 250 different and unique scenarios were identified.

The safety significance was also evaluated. This is generally component specific; however, one common safety significance is a loose part which can result from IGSCC. There are three basic safety consequences:

1. a loose part can inhibit control rod motion
2. a loose part can block or partially block a coolant flow channel
3. a large loose part can impact adjacent components and impair their function

There are other safety consequences not associated with loose parts which could be caused by damage to any of several reactor internals components, such as:

1. increased coolant leakage between plenums
2. damage to emergency coolant or shutdown systems
3. damage to control rods or prevent their motion
4. cause of a reactor coolant system leak

In order to reduce the number of scenarios to be considered, a screening logic based on the safety consequences identified above was prepared. Five criteria were developed that are believed to cover the most important issues necessary to adequately address public safety with regards to reactor vessel internals failures. The screening logic was applied to all 250 initially identified scenarios. Of these, 148 remained after the screening, which reduced the work scope somewhat, but still left a large number of sequences to evaluate. A quantitative risk assessment was subsequently conducted on these remaining 148 sequences, as described in the following section.

Preliminary Qualitative Risk Assessment

A qualitative ranking (based on potential contributions to CDF) was made of potential accident scenarios which can be exacerbated by IGSCC degradation of reactor internals. Various possibilities of single, common mode, and cascading failure sequences were postulated for the high, medium, or low rankings. Although the rankings were qualitative, a NUREG-1150 PRA was used to assist in providing for an estimate for the rankings.

A preliminary risk assessment including a list of potential safety concerns (i.e., possible accident scenarios), deterministically developed, was made. Specific areas were described for each potential accident sequence where additional analyses are needed to provide a more definitive understanding of accident scenarios that involve either simultaneous (i.e., common mode) or cascading (i.e., sequentially caused by other failures). The scope included both deterministic failure considerations and qualitative risk assessments.

Most (about 100) of the scenarios were ranked high. Although there appears to be a large number of scenarios, there is a great deal of redundancy in that the high-ranking scenarios fall into variations of two basic categories:

1. loss of the reactor protection system (RPS)
2. loss of coolant to the core

The high-ranking categories were broken into subcategories to further differentiate between the various causes of loss of the RPS and the various ways that coolant to the core could be lost. The following seven subcategories were chosen:

1. loss of scram capability
2. standby liquid control (SLC) system nonfunctional
3. both RPS and SLC nonfunctional
4. medium LOCA with loss of SLC
5. both high-pressure coolant injection (HPCI) and low-pressure coolant injection LPCI ineffective [no redundant emergency core cooling system (ECCS)]
6. core reflood to two-thirds level cannot be maintained (treated as loss of ECCS)
7. high-pressure coolant system (HPCS) and SLC (through sparger) eliminated (several BWR/5 and BWR/6 plants)

Each of the 100 high-ranked scenarios can be placed into one or more of these subcategories.

CONTINUED PROGRAM PHASE

The initial phase of the project, which was primarily to scope the overall effort, has been completed. The second phase is now underway, in which quantitative calculations will be performed. However, there are many difficulties in carrying out this program, such as:

(a) the large number of components and failure sequences
(b) the different types of BWRs
(c) the difficulty in estimating crack sizes and growth rates
(d) there are a large number of disciplines involved
(e) there are limited "good" PRA and thermal-hydraulic models available

It was decided to narrow the research scope to provide a simplified, cost-effective approach. The following simplifications were proposed as an initial approach:

(a) select a single plant for study
(b) select a single component and probable failure locations for initial calculations
(c) perform minimal calculations and research
(d) develop a methodology to introduce IGSCC-induced failures into an existing PRA which can then be applied to the failure of any BWR vessel internals component
(e) convert an existing TRAC-B model to a representative plant to determine flow characteristics

(f) estimate the failure probabilities and insert events associated with the failure of the selected component into an existing PRA, considering a single failure at the most likely locations, common mode failures, and cascading failure sequences. If successful, then apply to other components
(g) use expert panels to critique methods, offer suggestions for approach, and help in estimating probabilities and uncertainties

Plant Selection

A number of criteria were used to select a plant for study, including:
(a) is there an existing PRA model for the plant (internal and external events)
(b) is there an existing TRAC-B model for the plant (or one for a similar plant)
(c) is the plant typical
(d) older plants were preferred

The Peach Bottom BWR/4 was chosen for study. As a high-power BWR/4, it is the most representative type of BWR. There is a fairly good (but not ideal) PRA, and there exists a BWR/4 TRAC-B thermal-hydraulics model which can be modified to represent the selected plant. Figure 1 shows the general arrangement of a typical BWR/3-BWR/4 plant.

Initial Component Selection

A number of criteria were used to select a specific reactor internals component for study, including:
(a) degradation to date
(b) cascading possibilities
(c) safety significance
(d) typicality

The jet pump was the reactor internals component selected for study, as there has been recently discovered cracking in jet pump riser inlet welds[11] and jet pump failure could lead to a variety of cascading failure sequences. IGSCC failures have also initiated at the jet pump holddown beams, the first instance occurring in a BWR/3 in 1980. Cracking also was found in the beams of two BWR/6 plants. Subsequently, the beams have been redesigned. Figure 2 shows the general arrangement of a jet pump.

PRA Modification

Three sets of PRA models are available for the Peach Bottom nuclear power plant: the NUREG-1150 models, the Individual Plant Examination (IPE) and Individual Plant Examination for External Events (IPEEE) models, and the Accident Sequence Precursor (ASP) model. The NUREG-1150 PRA models for internal and external events at full power were generated in the late 1980s as part of an NRC-sponsored program to consistently analyze five different nuclear power plants. Generally, the NUREG-1150 studies included limited plant-specific data collection, and the external events analyses were performed with a streamlined and somewhat simplified methodology. In contrast, the IPE (for full-power internal events and internal flooding) was performed in the early 1990s and included more recent plant-specific data and design information. However, the IPEEE, performed in the mid 1990s, utilized screening and seismic margins approaches that did not result in models capable of predicting CDFs from external events. Finally, the ASP model for Peach Bottom is a simplified model compared with the NUREG-1150 and IPE models. The ASP model covers only full-power internal events and is considered to be too simplified to be of much use in this study.

Unfortunately, none of the PRA studies are ideal choices to support the evaluation of IGSCC of BWR internals. The NUREG-1150 studies address the plant design as it existed in the late 1980s and contain

very little plant-specific data, and the external events analyses suffer from various deficiencies. In contrast, the IPE/IPEEE studies reflect the plant design as it existed in the early 1990s, but again contain limited plant-specific data. Also, the IPEEE studies did not use methodologies that result in CDF predictions. In general, the ASP model is too simplified for the purposes of this study and does not include external events. Finally, all three types of studies did not address the CDF from low power and shutdown operations.

From past studies of IGSCC of BWR internals, it was expected that initiating events such as recirculation line breaks (RLBs) and seismic events will be important. Therefore, it was important that the Peach Bottom PRA chosen for use in this project be accurate with respect to RLBs and seismic events. Because the IPEEE did not use a methodology that could predict a seismic CDF, the IPE/IPEEE set of models is not appropriate for this project. Therefore, the NUREG-1150 set of PRA models were used. However, in order to update these models, several changes were made.

The existing PRA for the selected plant was modified for the IGSCC-induced failures. The following are examples of the modifications that were made:

1. introducing information from the latest Individual Plant Evaluation (IPE)
2. modifying seismic hazard curves to reflect more up-to-date seismic hazard information
3. including internal and external event PRA branches that were not used in previous PRA studies because of low probabilities
4. separating the main steam line, main feedwater line, and RLBs into three individual events, each with its own probability of occurrence
5. adding an event tree for IGSCC-induced initiating events

These modifications are applicable to all of the potential IGSCC-induced failures of reactor internals. However, the model was first run only with the probabilities of IGSCC-induced failures of jet pump components included.

RESULTS OF JET PUMP STUDY

Calculations that have been performed considered sequences initiated by jet-pump failures. To help establish which sequences would have negligible effects on core-damage frequency (CDF), and to identify the sequences that were more probable in increasing the CDF, parameter studies were conducted with the PRA model to determine which sequences could be screened as negligible contributors to CDF, and with structural analysis to determine probabilities of cascading failures.

The generic BWR CDF for internal events and internal flooding, internal fires, seismic events, and low-power and shutdown operation was estimated to be on the order of 5×10^{-5} events/rx/yr. Based on the assumption that a 10% increase in CDF is significant to risk (based on an interpretation of the acceptance guidelines in draft DG-1061),[12] and that there were approximately 50-100 scenarios to evaluate, a screening level for each sequence of 1×10^{-7} events/rx/yr was chosen for the preliminary calculations. Sequences involving failure of the reactor protection system and emergency core cooling system were evaluated.

The study included an assessment of IGSCC damage to date that has been detected in the various jet pumps components (Table 1) and the potential targets from a large jet pump loose part that might result in cascading failure sequences (Table 2).

Table 1. IGSCC damage in jet pumps

Jet pump component	IGSCC	Failure	Mitigation	Notes
Inlet riser	Y	N		Detected visually
Riser brace	Possibly	N		Primarily fatigue cracking
Holddown beam	Y	Y	Redesign	Material & size changes
Transition piece	N	N		
Nozzle	N	N		
Inlet mixer, throat	N	N		
Diffuser, adapter	N	N		

Table 2. Potential targets from failed jet pump

Component	IGSCC Damage	Damage Potential from Jet Pump	Safety Concern	Comment on Safety Concern
Baffle plate	N	N	–	
Baffle plate cover	Y	Y	Lower reflood level	Only for recirculation line break
Tie rod	N	Y	RPS, LPCS/HPCS diversion	Could fail core shroud
Core shroud	Y	N	–	Only if tie rods fail
Shroud head bolts	Y	Y	None	Only if upward migration possible; most bolts would have to fail
Core spray line	Y	Y	LPCS failure	Only if upward migration possible
Adjacent jet pump	Y	Y	Lower reflood level	Only for recirculation line break

Structural calculations were performed to assess damage to adjacent components that could result from jet pump failures. Thermal-hydraulic studies were conducted by Scientech to calculate the flow rate through the jet pumps, and the flow velocities in the annular region surrounding the jet pumps. IGSCC history, energy required for failed jet pump parts to migrate to nearby components, and energy required to damage adjacent components were considered.

The results showed that there was insufficient energy for loose jet pump parts to migrate upward to damage components such as the core spray system. Loose jet pump parts could contact adjacent jet

pumps, the reactor vessel wall, the baffle plate and covers, the core shroud, and core shroud tie rods. Damage to these components would not be expected except for the following:

1. If the adjacent jet pump, baffle plate cover, and core shroud were already very severely damaged by IGSCC, these components could fail, possibly resulting in further cascading failures
2. The plant chosen for evaluation did not contain core shroud tie rods, but calculations showed that impacts from failed jet pumps should not fail properly installed tie rods

Preliminary results show that the cascading failure of an adjacent jet pump or baffle plate covers would not result in a significant increase in CDF. If a core shroud were very severely damaged, it is expected that inservice inspection would have detected the degradation, and repair methods such as tie rods would have been installed. If a tie rod were impacted by loose jet pump part, the rod would not fail if properly installed.

Loose parts from a failed jet pump might migrate through the lower core plenum, and back up into the core, which could block control rod insertion or block coolant from sufficiently reaching a fuel channel. Although probability estimate of loose parts is very difficult to quantify, the studies show that there is a very low probability of this sequence affecting the CDF.

APPLICATION TO OTHER COMPONENTS

Once the methodology was developed, it was applied to the remaining components. The 148 sequences identified in the initial phase of the project included any plausible damage from any of the reactor internals for all BWR types, and without regard to safety analysis or PRA results. In order to reduce the number of sequences from 148 to a more manageable number, the following results and assumptions were used to reduce the list to about 36:

1. A number of the sequences did not affect BWR/4s. This reduced the list by 9.
2. A number could immediately be screened from the plant-specific PRA. This reduced the list by 18.
3. A number of the sequences involved loose parts from various postulated failed reactor internals breaking up, migrating to the core, and entering the small holes in the CRD housings to inhibit control rod insertion or block fuel channels. Studies showed that while probabilities for these sequences were very difficult to quantify, the overall assessment was that damage to a sufficient number of control rod drive mechanisms or fuel elements was below the screening value. This reduced the list by about 45.
4. Safety studies have shown that for core damage to occur, approximately 1/3 of the control rods would have to fail to insert on a random basis, or 5 to 10 control rods grouped together.[13,14] Since a number of the sequences involved only a single rod failure, this reduced the list by about 20.
5. For some events that involved a SBLOCA, the plant makeup system could easily supply makeup during the subsequent plant shutdown, and the event could be screened. This reduced by list by 6.
6. A number of the remaining sequences had been evaluated during the jet pump study. This reduced the list by an additional 17.

Of the remaining sequences, only a few are considered major, and involve either a reactivity accident caused by failure of rods to insert because of misalignment of core internals, or diversion or loss of coolant to the core. These involve the most important internals, such as the core shroud, core plate, top guide, and core spray system. The accident initiators are line breaks and seismic events.

The analyses are dependent on the frequency and magnitude of seismic events and the frequency of line breaks. The mean frequencies for various ground level accelerations were taken from the Peach Bottom seismic hazard curve. The accelerations at the levels of the reactor internals supports were calculated by

multiplying the ground level accelerations factors which account for the amplification between ground level and the elevation at the supports, based on a simplified approach recommended by Dr. R.P. Kennedy, a consultant to the project. Various estimates of pipe break probabilities have been made over the years. The values in NUREG-1150[15,16] have received widespread review and have been used in many studies. A recent study by the INEEL[17] recommended lower probabilities (events/rx-yr) for line breaks in U.S. BWR plants. BWRVIP studies[18] recommend an even lower probability for a BWR recirculation system LBLOCA. Sensitivity studies are being included to assess the results from using the various estimates.

Table 3. Estimates of BWR recirculation line break frequency (events/yr)

Source	Mean frequency
NUREG-1150	1E-4
Poloski et al.	2E-5
BWRVIP	7.5E-6

The probability of component failure can be simply stated by the following:

Probability of Failure = Pci x Pmbi x Pgtf

Where Pci = probability of crack initiation
Pmbi = probability crack missed by inspection
Pgtf = probability of crack growth through wall until fragility depth is reached for loading condition under study

A conditional failure probability of 1 could be used, but this would result in a significant increase in CDF for the failure of several of the major components and is too conservative. However, this serves to emphasize that if the degradation if left unmanaged, there could be a significant increase in the probability of CDF.

Inspection crack detection probabilities, crack growth rates, and structural calculations are currently being used to provide estimates of these probabilities as input to the PRA. Figure 3 shows the structural finite element model being used in the calculations. The cutaway view shows the reactor vessel and support, the core shroud and head, the top guide, and the core plate. For clarity, the detailed finite element mesh is not shown.

SUMMARY

A program is underway to perform an independent risk assessment of accident sequences initiated by IGSCC-induced failures of BWR reactor internals components. An initial phase has been completed in which background material was gathered and evaluated, potential accident sequences were identified, and a qualitative PRA was performed to rank the sequences as having a high, medium, or low potential to significantly change the core damage frequency. A second phase is underway to perform a simplified, quantitative PRA on a representative high-power BWR/4. The existing PRA for the plant has been upgraded and modified for the project, including introducing an event tree associated with reactor internals failures. Failures associated with jet pumps were first to establish an analysis methodology. Preliminary results show low probabilities for sequences initiating from jet pump failures significantly affecting the CDF. The methodology is being extended to other major reactor internals components.

ACKNOWLEDGEMENTS

Joel Page was NRC program manager for the initial stage of the program. Steve Eide and Mike Calley of the INEEL performed the PRA analyses, and Mike Nitzel and Tom Clark performed the structural analysis. The staff of the Peach Bottom plant supplied drawings and information to assist in carrying out the project. The Scientech staff conducted thermal-hydraulic calculations for the studies. Dr. R.P. Kennedy served as a structural risk assessment consultant to the project, and Drs. R.W. Staehle and G.W. Was provided consultation on crack growth rate estimates.

REFERENCES

1. United States Nuclear Regulatory Commission, Information Notice 93-79, "Core Shroud Cracking at Beltline Region Welds in Boiling Water Reactors", September 30, 1993.
2. United States Nuclear Regulatory Commission, Generic Letter 94-03, "Intergranular Stress Corrosion Cracking in Boiling Water Reactors", June 25, 1994.
3. United States Nuclear Regulatory Commission, Information Notice 94-42, "Cracking in the Lower Region of the Core Shroud in Boiling Water Reactors", June 7; Supplement 1, July 19, 1994.
4. Medoff, J., *Status Report: Intergranular Stress Corrosion Cracking of BWR Core Shrouds and Other Internal Components*, NUREG-1544, 1996.
5. United States Nuclear Regulatory Commission, Information Notice 80-07, "BWR Jet Pump Assembly Failure", April 4, 1980.
6. United States Nuclear Regulatory Commission, IE Bulletin 80-13, "Cracking in Core Spray Spargers", May 12, 1980.
7. United States Nuclear Regulatory Commission, Information Notice 88-03, "Cracks in Shroud Support Access Hole Cover Welds", February 2, 1988.
8. United States Nuclear Regulatory Commission, Information Notice 92-57, "Radial Cracking of Shroud Support Access Hole Cover Welds", August 11, 1992.
9. United States Nuclear Regulatory Commission, Information Notice 93-101, "Jet Pump Hold-Down Beam Failure", December 17, 1993.
10. United States Nuclear Regulatory Commission, Information Notice 95-17, "Reactor Vessel Top Guide and Core Plate Cracking", March 10, 1995.
11. United States Nuclear Regulatory Commission, Information Notice 97-02, "Cracks Found in Jet Pump Riser Assembly at Boiling Water Reactors", February 6, 1997.
12. U.S. Nuclear Regulatory Commission, Regulatory Guide 1.174, "An Approach for Using Probabilistic Risk Assessment in Risk-Informed Decisions on Plant-Specific Changes to the Licensing Basis", July 1998.
13. United States Nuclear Regulatory Commission, *Anticipated Transients Without Scram for Light Water Reactors,* NUREG-0460, Vol. 2, 1978.
14. General Electric Company, *Technical Specification Improvement Analyses for BWR Reactor Protection System,* NEDC-30851P, 1985.
15. United States Nuclear Regulatory Commission, *Severe Accident Risks: An Assessment for Five U.S. Nuclear Power Plants (Final Summary Report)*, NUREG-1150, Vol. 1 and 2, 1990.
16. Kolaczkowski, A.M., et al., *Analysis of Core Damage Frequency: Peach Bottom, Unit 2 Internal Events*, NUREG/CR-4550, SAND86-2084, Vol, 4, Rev., 1, Part 1, 1989.
17. Poloski, J.P., et al., *Rates of Initiating Events at U.S. Nuclear Power Plants: 1987-1995*, NUREG/CR-5750, INEEL/EXT-98-00401, 1999.
18. BWRVIP, V. Wagoner to C.E. Carpenter (NRC) letter "BWRVIP Response to NRC Request for Additional Information on BWRVIP-28", dated Dec. 8, 1997.

NOTICE
This paper was prepared as an account of work sponsored by an agency of the U.S. Government. Neither the U.S. Government nor any agency thereof, or any of their employees, makes any warranty, expressed or implied, or assumes any legal liability or responsibility for any third party's use, or the results of such use, of any information, apparatus, product or process disclosed in this paper, or represents that its use by such their party would not infringe privately owed rights. The views expressed in this paper are not necessarily those of the NRC. The NRC has neither approved not disapproved its technical content.

Figure 1. BWR/3-BWR/4 general arrangement

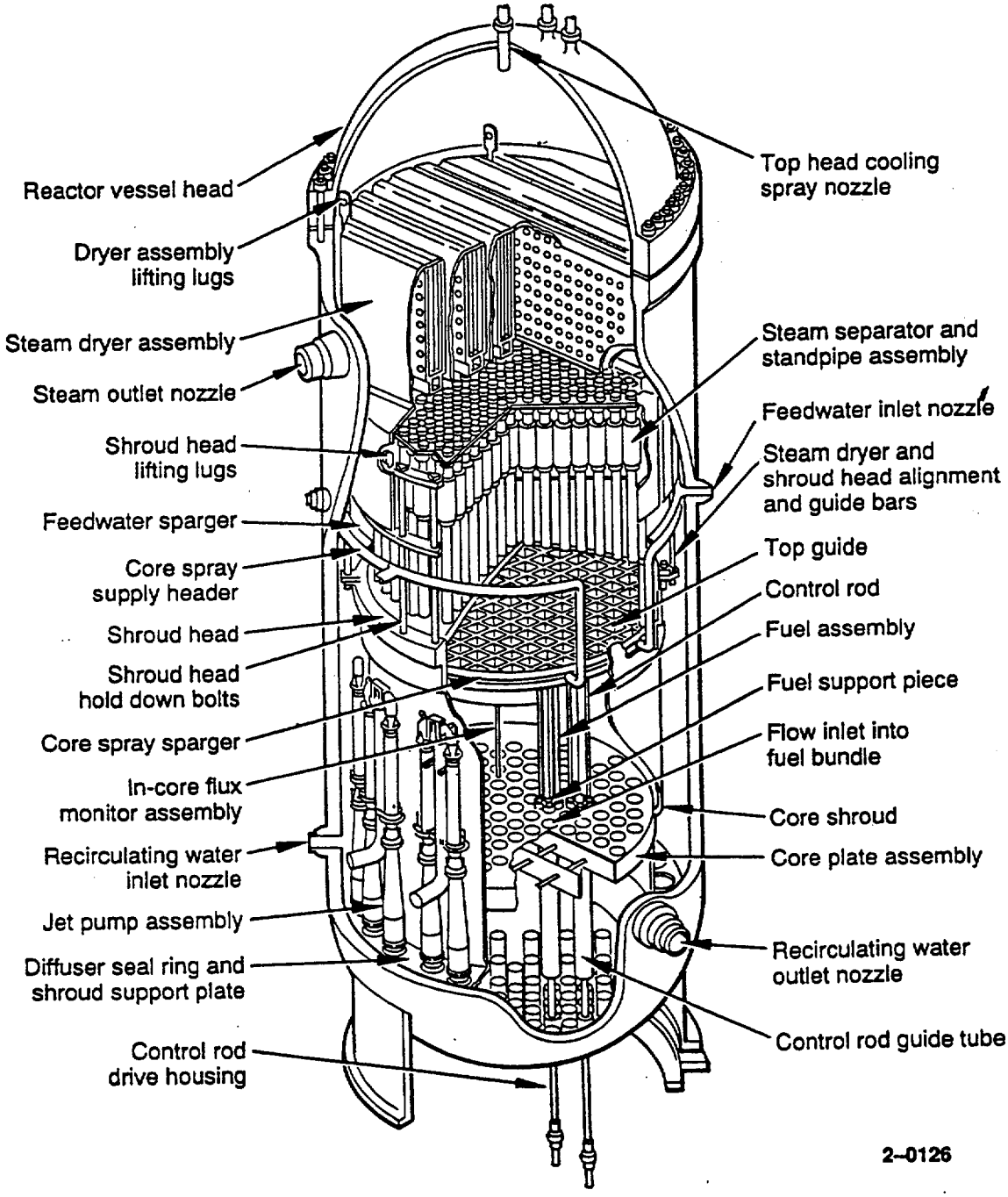

Figure 2. Typical jet pump arrangement

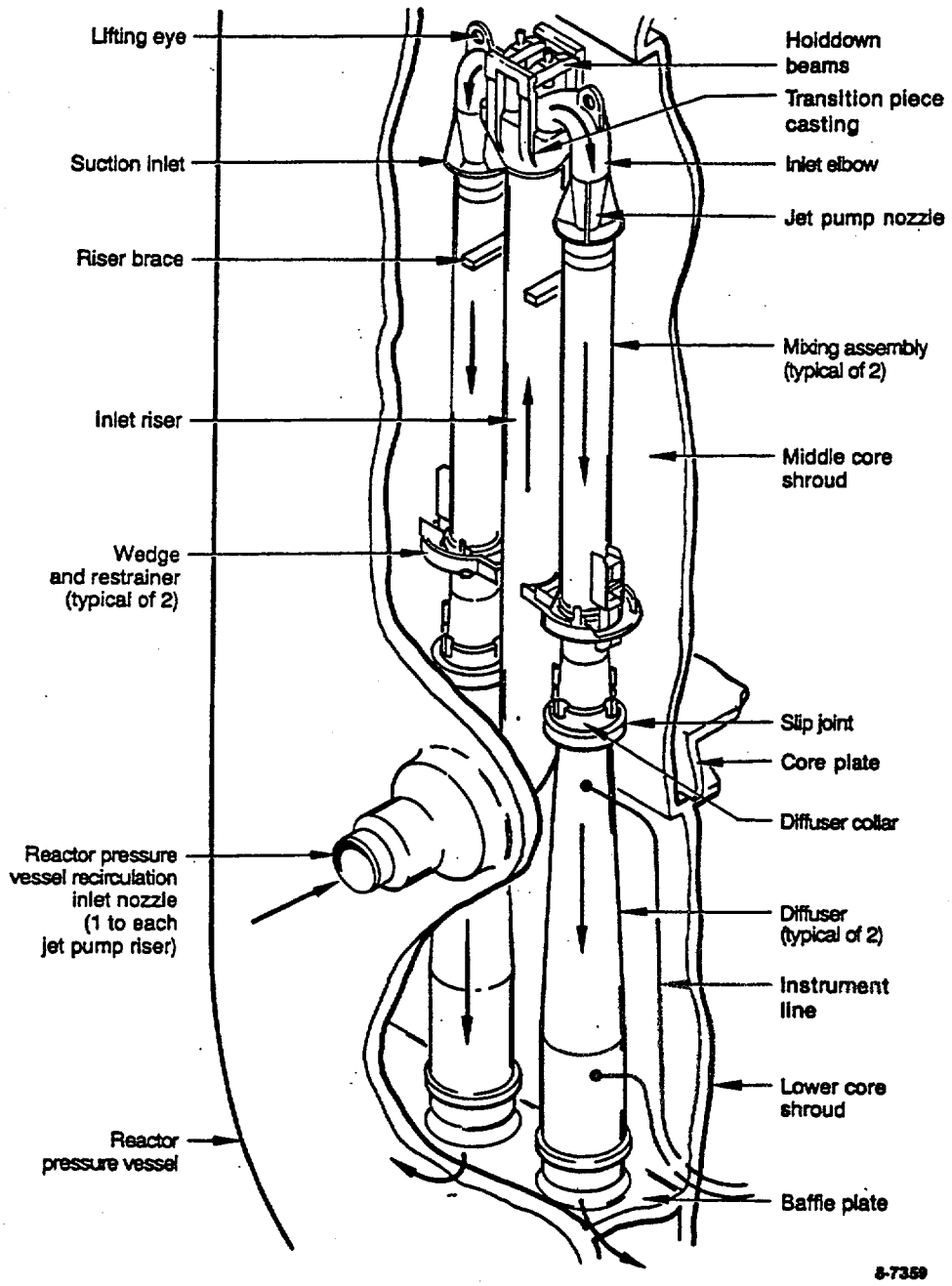
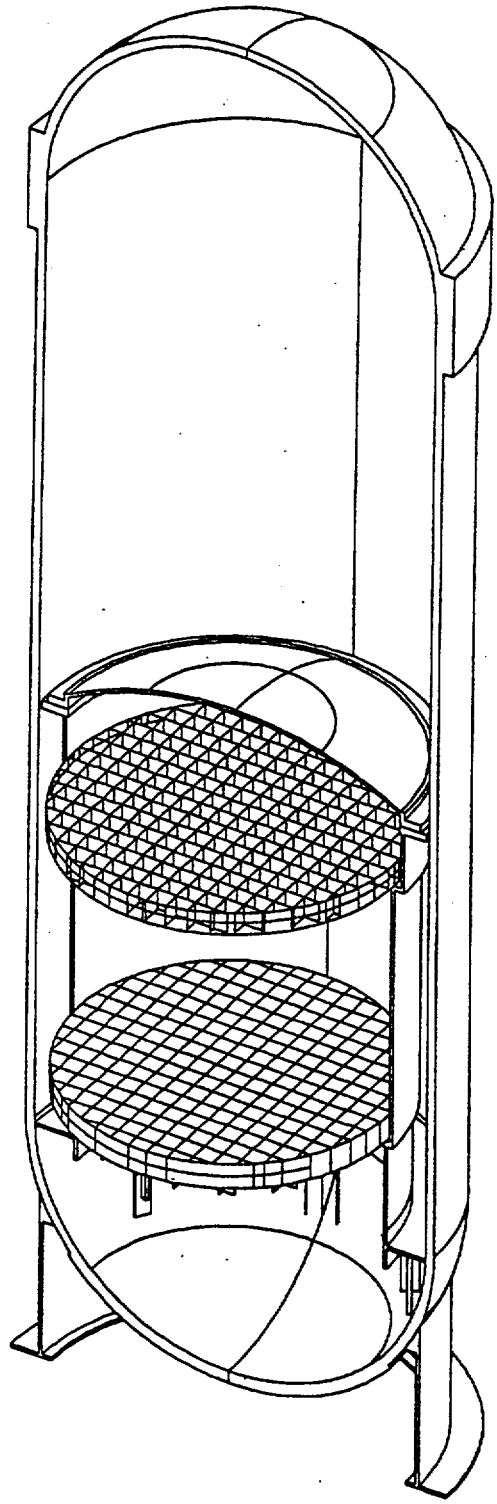
Figure 3. General cutaway view of finite element model, showing reactor vessel and support, core shroud and head, top guide, and core plate