10.4.2 ATTACHMENT II - ETSS #2 RPC Examination (Pancake, Ax, and Circ)

Examination Technique Specification Sheet

ETSS # 2 - PANCAKE COIL (axial and circ. Directed coils) | Page: 1 of 5

Site: Entergy Operation Inc. Arkansas Nuclear One Unit #2

Examination Scope

Applicability: Tubesheet examinations. Diagnostic testing and/or to confirm bobbin indications. Detection of IGA/ODSCC or PWSCC.

Instrument	Tubing
Manufacturer/Model: Zetec MIZ-30A/30-8	Material Type: Inconel 600
Data Recording Equipment	OD/Wall (inch): 0.750" OD X 0.048" Wall
Manuf./Media: HP HD 2.6GbOptical or Equiv.	**Calibration Standard**
Software	Type: RPC EDM Notch Standard
Manufacturer: Zetec	**Analog Signal Path**
Version/Revision: EN98 1.30	Probe Extension Manuf.: Zetec
Examination Procedure	Extension Type & Length: Universal 945-1760, 75 ft.
Number/Revision: HES-28 Rev. 11	Slip Ring Model Number: 508-2052

Scan Parameters

Scan Direction: Push or Pull

Digitization Rate, Samples Per Inch (minimum):	Axial Direction	≥25	Circ. Direction	≥30

Probe Speed	Sample Rate	RPM Set	RPM Min	RPM Max
0.45 in/sec.	1280	900	810	1086

Probe/Motor Unit

Description (Model/Diameter/Coil Dimensions)	Length	Motor Units
810-4090-000 - .610 (.115) MRPC 3C-52PH	50' or 83'	700-4055-071 - .610 9D-MRPC-52MU
D# 2651-2-A - .580 (.115) MPRC 3C-52PH	50' or 83'	810-4050-001 - .560 9D-MRPC-52MU
		D#3414-13-A - .600 TTS extension shaft (+2°/-2°) 48'

Data Acquisition

Calibration 0.115 Coil Channels (Dual Probes)

Channel & Frequency	Ch. 1 & 4 300 kHz	Ch. 7 & 10 200 kHz	Ch. 13 & 17 100 kHz	Ch. 23 & 24 20 kHz
Phase Rotation	20% ID AX Notch @ 12 degrees	20% ID AX Notch @ 12 degrees	20% ID AX Notch @ 12 degrees	Tube Support Ring Up @ 90 degrees
Span Setting	40% OD Axial Notch @ 2 divisions	40% OD Axial Notch @ 2 divisions	40% OD Axial Notch @ 2 divisions	Tube Support Ring @ 3 Divisions

Calibration Axial Sensitive Coil and Trigger Channels (Dual Probes)

Channel & Frequency	Ch. 2 & 5 300 kHz	Ch. 8 & 11 200 kHz	Ch. 15 & 19 100 kHz	Ch. 14 & 18 100 kHz
Phase Rotation	20% ID AX Notch @ 12 degrees	20% ID AX Notch @ 12 degrees	20% ID AX Notch @ 12 degrees	Large pulse up, small pulse horizontal
Span Setting	40% OD Axial Notch @ 2 divisions	40% OD Axial Notch @ 2 divisions	40% OD Axial Notch @ 2 divisions	Large Pulse @ 4 divisions

Calibration Circumferential Sensitive Coil (Dual Probes)

Channel & Frequency	Ch. 3 & 6 300 kHz	Ch. 9 & 12 200 kHz	Ch. 16 & 20 100 kHz	Ch. 21 & 22 100 kHz (optional)
Phase Rotation	20% ID Circ. Notch 12 degrees	20% ID Circ. Notch 12 degrees	20% ID Circ. Notch 12 degrees	Pulse @ 90 degrees
Span Setting	40% OD Circ. Notch @ 2 divisions	40% OD Circ. Notch @ 2 divisions	40% OD Circ. Notch @ 2 divisions	Pulse @ 4 divisions

Examination Technique Specification Sheet

ETSS # 2 - PANCAKE COIL (axial and circ. directed coils) | Page: 2 of 5

Configuration Board Settings

trig: off	down	Configuration # :				Name : 3-Coil						samples / sec : 1280				rec. media =	Hard
tester =		board # 1				board # 2				board # 3		board # 4		board # 5		board # 6		board # 7	boar
# of channels =	24	probe # 1				probe # 1				probe # 2		probe # 2		probe # 1		probe # 1		probe # 1	prob
		DRIVE				DRIVE				DRIVE		DRIVE		DRIVE		DRIVE		DRIVE	
		A	D	B	C	A	D	B	C	A	D	B	C	A	D	B	C	A	D	B	C	A	D	B	C	A	D	B	C	A
Drive Polarity		N			N	N		N	N	N			N	N		N	N												
Group Number		1			1	1		1	1	2			2	2		2	2												
Coil Number		1			4	5		7	8	1			4	5		7	8												
FREQ #1 300 kHz	Time Slot # 1	D				D		D		D				D		D													
	G: x 2 | 12.0 V																												
FREQ #2 200 kHz	Time Slot # 2	D				D		D		D				D		D													
	G: x 2 | 12.0 V																												
FREQ #3 100 kHz	Time Slot # 3	D			D	D		D		D			D	D		D													
	G: x 2 | 12.0 V																												
FREQ #4 100 kHz	Time Slot # 4								D								D												
	G: x 2 | 12.0 V																												
FREQ #5 20 kHz	Time Slot # 5	D								D																			
	G: x 4 | 12.0 V																												
FREQ #6	Time Slot # 6																												
FREQ #7	Time Slot # 7																												
FREQ #8	Time Slot # 8																												

END LOC CH : 1 1
THRESHOLD : off off
(P) GAIN : x6
ACTIVE PROBES : 2

DRIVE A : D = A1-A2, P = dr:A1 pu:A2,DP = dr : D1&D2 pu : A1&A2
DRIVE B : D = B1-B2, A = A1-B2
P = dr : B1 pu:B2, DP = dr : C1&C2 pu : B1&B2
DRIVE C : D = C1-C2, A = D1-C2
DRIVE D : D = D1-D2

Default | Print | Gain/PD | Screen

Special Instructions

1. Enter a message at the beginning of each calibration group indicating that the data is being acquired with either single or dual probes. If dual probes are being used state which calibration group is the primary probe and which is the secondary probe. The message shall include whether the data is acquired on the push or pull.
2. When acquiring data with a single probe delete boards 3 & 4. The Coil 1 (.115" Panc) channels will then be Ch 1=300 kHz, Ch 4=200 kHz, Ch 7=100 kHz, Ch 12=20 kHz. The Coil 4 (Trigger) channel will be Ch8=100 kHz. The Coil 5 (Axial) channels will be Ch 2=300 kHz, Ch 5=200 kHz, Ch 9=100 kHz. The Coil 7 (Circ) channels will be Ch 3=300 kHz, Ch 6=200 kHz, Ch 10=100 kHz. Coil #8 will be Ch 11 100 kHz.
3. Examine each location and record a run-out. Run-out record not required for tubesheet intersection scans.
4. The TSH expansion transition shall be acquired by pushing the probe through transition and shall be adequate to cover the target location. The scan shall normally be from 2.0" below the transition to 2.0" above the top of the tubesheet. In the event that the probe stalls on the push, the data may be acquired by pulling the probe through the transition. This will require the operator to message the event prior to acquiring the data.
5. Other locations may be scanned on the PULL or PUSH and shall be adequate to cover the target location. For special interest indications located within a structure, the data shall be acquired ±2" from the center of the structure. All other locations shall be acquired from structure to structure unless encoders are used, in which case the scan may include one structure. In these instances, care should be taken to insure that the proper location is scanned with adequate data past the target location (recommend 5 inches) to account for any variations in probe speed or axial scaling.
6. One calibration standard may be recorded at the beginning and end of each cal group provided it is a successful scan of the standards complete length.
7. Tubes which have been mis-encoded should be corrected by entering a message to void that entry and re-examining the tube with the proper encode. This is required to maintain an accurate DSR database.
8. Axial Encoder is to be used for all special interest examinations. When not used, activate timeslot as usual, and no setup is required.

Examination Technique Specification Sheet

ETSS # 2 - PANCAKE COIL (axial and circ. directed coils) | Page: 3 of 5

Data Analysis

Pancake Channels

Channel & Frequency	Ch 1 300 kHz	Ch 4 200 kHz	Ch 7 100 kHz	Ch 12 (Locator) 20 kHz
Phase Rotation	20% ID Ax. Notch @ 12 degrees	20% ID Ax. Notch @ 12 degrees	20% ID Ax. Notch @ 12 degrees	Tube Support Ring Up @ 90 degrees
Span Setting Minimum	40% OD Ax. Notch @ 2 divisions	40% OD Ax. Notch @ 2 divisions	40% OD Ax. Notch @ 2 divisions	Tube Support Ring @ 3 Divisions

Axial Sensitive Coil & Trigger Channels

Channel & Frequency	Ch 2 300 kHz	Ch 5 200 kHz	Ch 9 100 kHz	Ch 8 (Trigger) 100 kHz
Phase Rotation	20% ID Ax. Notch @ 12 degrees	20% ID Ax. Notch @ 12 degrees	20% ID Ax. Notch @ 12 degrees	Large Pulse Up, Small Pulse Horiz.
Span Setting Minimum	40% OD Axial Notch @ 2 divisions	40% OD Axial Notch @ 2 divisions	40% OD Axial Notch @ 2 divisions	Large Pulse @ 4 divisions

Circumferential Sensitive Channels & Encoder Channel

Channel & Frequency	Ch 3 300 kHz	Ch 6 200 kHz	Ch 10 100 kHz	Ch 11 100 kHz (encoder)
Phase Rotation	20% ID Circ. Notch @ 12 degrees	20% ID Circ. Notch @ 12 degrees	20% ID Circ. Notch @ 12 degrees	Pulse @ 90 degrees
Span Setting Minimum	40% OD Circ. Notch @ 2 divisions	40% OD Circ. Notch @ 2 divisions	40% OD Circ. Notch @ 2 divisions	Pulse @ 4 divisions

Process Channels

Channel & Frequency (See Note 5)	Ch P1 300/100 kHz Panc	Ch P2 300/100 kHz Axial	Ch P3 300/100 kHz Circ	N/A
Phase Rotation	20% ID Ax. Notch @ 12 degrees	20% ID Ax. Notch @ 12 degrees	20% ID Circ. Notch @ 12 degrees	
Span Setting Minimum	40% OD Ax. Notch @ 2 divisions	40% OD Axial Notch @ 2 divisions	40% OD Circ. Notch @ 2 divisions	

Voltage Normalization

CH	Signal (Note 13)	Set	Normalize
1	100% Ax notch	20 Vp-p	Ch. 4,7 & P1
2	100% Ax notch	20 Vp-p	Ch. 5 , 9 & P2
3	100% Circ. notch	20 Vp-p	Ch. 6 , 10 & P3

Calibration Curves

Type	CH	Set Points
(Reso) Phase Curve (Note 12)	1	40, 60, 100 Ax. OD notch
(Reso) Phase Curve (Note 12)	1	40, 60,100 Circ OD notch

Data Screening

Left Strip Chart	Right Strip Chart	Lissajous
P1	Ch 6	Ch P1

Reporting Requirements

Condition/Region	Report	Ch.(Note 16)	Comment
Single Axial Indication	SAI	1 or P1	Any amplitude - Report on volts peak - peak (TBR in Util 2)
Multiple Axial Indication	MAI	1 or P1	Any amplitude - Report on volts peak - peak (TBR in Util 2)
Single Circumferential Indication	SCI	1 or P1	Any amplitude - Report on volts peak - peak (TBR in Util 2)
Multiple Circumferential Indication	MCI	1 or P1	Any amplitude - Report on volts peak - peak (TBR in Util 2)
Single Volumetric Indication	SVI	1 or P1	Any amplitude - Report on volts peak - peak (TBR in Util 2)
Mixed Mode Indication	MMI	1 or P1	Any amplitude - Report on volts peak - peak (TBR in Util 2)
Possible Loose Part	PLP	12	Any Indication of Secondary Side Foreign Parts
Volumetric	VOL	1 or P1	Any amplitude - Report on volts peak - peak
Loose Part Indication	LPI	P1	Any Indication of tube degradation associated w/ PLP (see Note15) (TBR in Util 2)
Multiple Volumetric Ind.	MVI	1 or P1	Any amplitude - Report on volts peak-peak (TBR in Util 2)

Examination Technique Specification Sheet

ETSS # 2 - PANCAKE COIL (axial and circ. directed coils) | Page: 4 of 5

Special Instructions

1. Refer to Appendix II additional instructions regarding the data screening and evaluation of RPC Probe data.
2. All phase rotation settings are set with indications going up
3. Rotate data using "Data Slew Menu" so coils 5 and 7 are aligned with coil 1.
4. Span, Phase, and Volts are to be set using the center of the notch.
5. Process Channel P1, P2 and P3 shall be created to aid in the evaluation of indications that may be masked deposits. Suppress the tube support ring on the calibration standard using the signal response from one complete revolution of the support ring. After suppression check the standard to make sure all flaws are not distorted by the suppression process.
6. Evaluate the full length of the recorded data.
7. Plot tubesheet interfaces with Channels 1, 2 and 3 as a minimum.
8. Volumetric (MBM) calls at the top of the tubesheet may represent mixed mode cracking. Indications should b investigated to determine that cracking is not present prior to accepting a MBM call.
9. Monitor the configuration widget for proper data sampling. Set the warning dialog to trigger at 25 axial samples and 30 circumferential samples. When these requirements are not met in the area of interest, reject the data and notify the Lead.
10. When the c-scan plot area is set to ±1.0" there should be a minimum of 50 scan lines and 72 data points per scan line.
11. Label channels 1,4, 7 and P1 "Panc". Label channels 2, 5, 9 and P2 as "Axial". Label channels 3, 6, 10 and P3 as "Circ". Label channel 8 as "Trigg". Label channel 11 as "AxEn". Label channel 12 as "Loc".
12. Resolution as required will size, on best effort basis, each reported indication. Two phase angle calibration curves will be required. One for axial indications and one for circumferential indications. These calibration curves will be developed inside the RPC c-scan window.
13. When the 100% EDM notch saturates on specific channels, use the 60% ID notch and set to 7.0 volts for these channels.
14. This configuration can be used with a single pancake coil.
15. Any bobbin PLP call shall be rotated and compared to the previous outage inspection. If the PLP was called last outage, the bobbin signal shall be compared and any change >10 degrees phase angle on P1 shall be reported as an LPI and repaired.
16. Reporting from the directed coils (axial, circ) is allowable when the pancake coil does not produce a good signal.

Examination Technique Specification Sheet

ETSS # 2 - PANCAKE COIL (axial and circ. directed coils)

Resolution Sizing Methodology of Indications for Engineering Evaluation

SG ROW COL VOLTS DEG PCT CHAN LOCATION FROM TO EXTENT UTIL1 UTIL2

Circumferential Indication (SCI, MCI)

10	114	82	0.18	33	ARC	1 or P1	TSH	+0.15		TSHTSH		
10	114	82	0.34	21	SCI	1 or P1	TSH	+0.15		TSHTSH		TBR
10	114	82	0.34	21	78	1 or P1	TSH	+0.15		TSHTSH		

Axial Indication (SAI, MAI)

10	112	4	0.95	0	LEN	1 or P1	01H	+0.25		01H01H		
10	112	4	0.67	90	SAI	1 or P1	01H	+0.25		01H01H		TBR
10	112	4	0.67	90	71	1 or P1	01H	+0.25		01H01H		

Volumetric Indication (SVI, MVI, MMI, LPI)

											CIRC	AXIAL
10	88	4		0	CLP	1 or P1	04H	+10.25	0.76	05H04H	0.56	0.56
10	88	4	1.01	123	SVI	1 or P1	04H	+10.25		05H04H		TBR
10	88	4	1.01	123	43	1 or P1	04H	+10.25		05H04H		

The voltage shall be the maximum voltage response of the indication.

The Depth shall be the deepest or most representative estimate.

The Location shall be recorded as the distance from the center of the nearest structure to the first Hit of the indications. All Line Entries shall have the same Locations.

1 Indications will be measured using the 300 kHz pancake coil. If other frequencies or coils give a better representation of the indication it may be used. Depth measurements will be estimated from the phase angle calibration curve using the deepest hit or the most representative estimate. The most representative estimate is that derived from multiple hits, which display close correlation, and only one hit is greatly different.

2 Linear (crack-like) indications require a length measurement. The measurement will be taken from the C-SCAN strip chart using the To/From measurement feature. Multiple scan lines shall be reviewed to insure a conservative measure.

3 Volumetric indications require length and width measurement. Set the threshold just above baseline and adjust the box to the size of the positive image. Set the OD (.750") for tube diameter in C-SCAN "users select".

4 In the Circ and Axial Liss windows of the C-SCAN "set volts units" to "use main eddy voltage".

5 Report SVI, MVI, VOL, SAI, MAI from Circ Liss. Report SCI, MCI from Axial Liss.

NOTE: SEE 2-415-0004 FOR PLACEMENT OF NYLON SLEEVE

					D	REVISIONS	REV STATUS OF SHEETS	REVISIONS					
					2	SHEET		LTR	DATE	DESCRIPTION	APVD	CK	DR
								H	4/5/96	ADDED ORIENTATION FOR SEC. VIEWS	[illegible]	[illegible]	KZ

LOCATION	A	B	C	D	E	F	G	H	I	J	K
PHYSICALLY MEAS DEPTH	.0215	.0205	—	—	.0205	THRU	THRU	.0300	.0095	.0260	.0155
DEPTH IN % OF WALL	43%	41%	—	—	41%	100%	100%	59%	19%	51%	31%
E.T. PHASE ANGLE MEAS							40°	112°	152°		
DIA OF DEFECT ±.003											

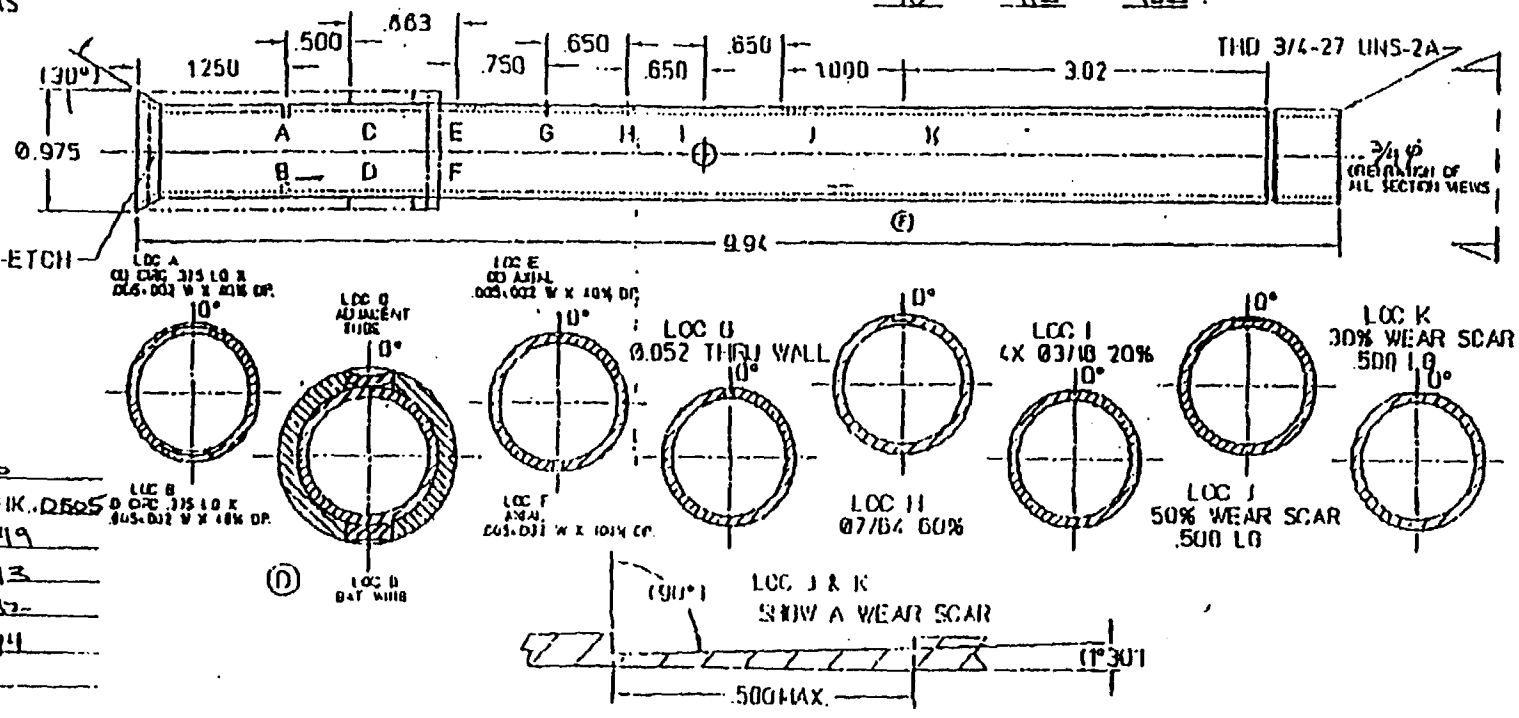

MATERIAL INCONEL 600
AVERAGE MEAS WALL THK. .0505
NOMINAL WALL THK. .049
HEAT LOT NO 752493
TEST FIXED USED 400 KHz
SERIAL NO. Z-15044
P.O NO. 8710
REL. NO NA
QUALITY REL. NO. NA
DATE MFG. 5-17-96
Q.A INSP [illegible]
CUSTOMER Rockridge Technologies
RECORDED 10
PROBE USED [illegible]
REVIEWED BY [illegible]

NOTE.

UNL. OTHERWISE SPECIFIED DIM ARE IN INCHES TOLERANCES DECIMAL FRACT. ± 1/16 XXXX ± .003 XXX ± .015 XX ± .050 X ± .003 ANGULAR ±1° FINISH	DRAWN G. HATELICH	DATE 08/24/94	ZETEC INC
	CHECK D. KNES	08/30/94	TITLE DUAL GUIDE TUBE STD. W/ MISC. DEFECTS
	DESIGN		SIMILAR / DWG NO 2-415-1015
	APVD QA G. ATKINS	08/31/94	SCALE NTS / USED ON 2-415-0004 / SHT 1 OF 2

NOTE: SEE 2-415-0004 FOR PLACEMENT OF NYLON SLEEVE

					0	REVISIONS	REV. STATUS OF SHEETS	LTR	DATE	REVISIONS DESCRIPTION	APVD	CK	DR
					2	SHEET		11	4/5/96	ADDED ORIENTATION FOR SEC. VIEWS			KZ

LOCATION	A	B	C	D	E	F	G	H	I	J	K
PHYSICALLY MEAS. DEPTH	.0195	.0205	—	—	.0215	THRU	THRU	.0300	.0100	.0240	.0155
DEPTH IN % OF WALL	39%	41%	—	—	43%	100%	100%	59%	20%	51%	31%
E.T. PHASE ANGLE MEAS							40°	110°	151°		
DIA OF DEFECT .003											

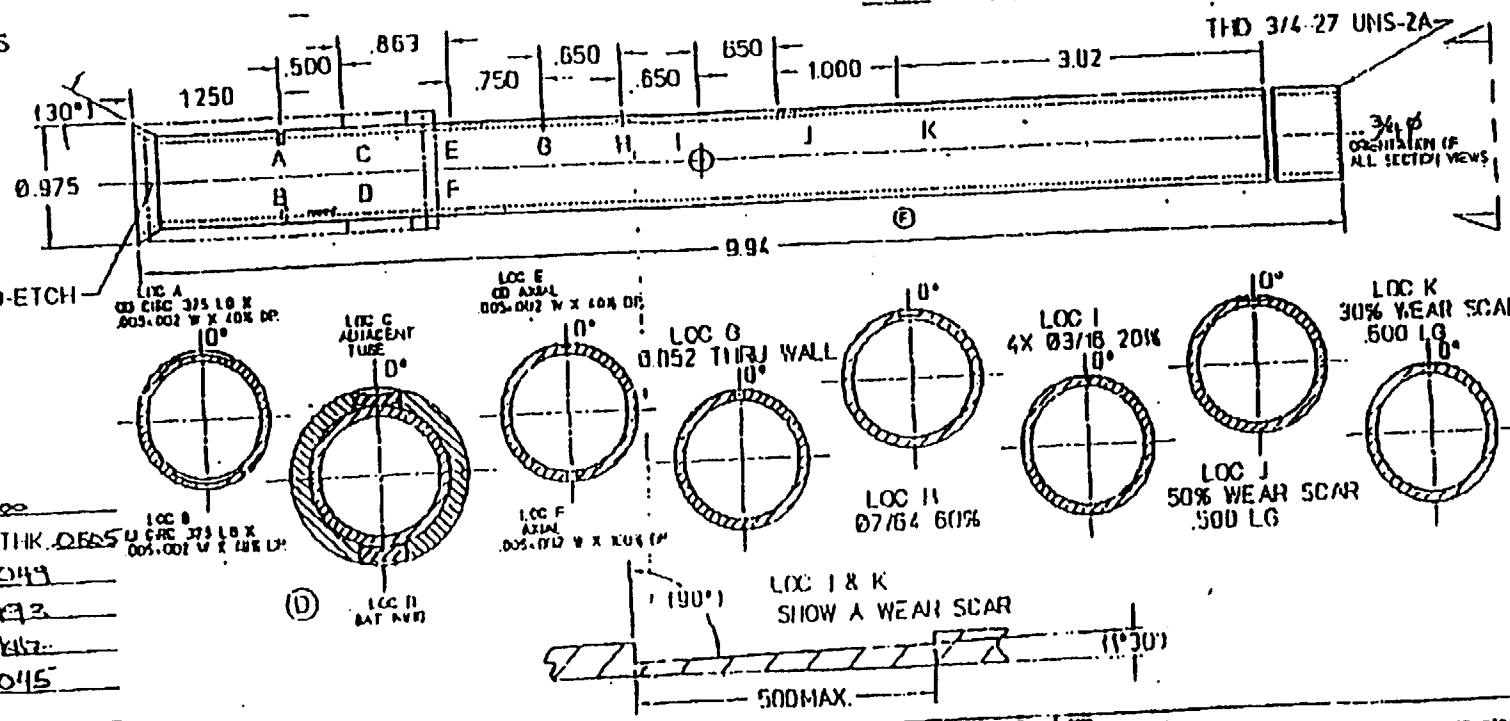

MATERIAL INCONEL 600
AVERAGE MEAS WALL THK. .0505
NOMINAL WALL THK. .049
HEAT LOT NO. 752493
TEST FREQ. USED 400 KHz
SERIAL NO. Z-15045
P.O. NO 8710
REL. NO. NA
QUALITY REL. NO. NA
DATE MFG. 5-17-96
Q.A. INSP. [signature]
CUSTOMER Rockridge Technologies
RECORDED 40
PROBE USED [illegible]
REVIEWED BY [signature]

NOTE:

UNL. OTHERWISE SPECIFIED
DIM ARE IN INCHES
TOLERANCES
DECIMAL FRACT. ± 1/16
XXXX ± .003
XXX ± .015
XX ± .050
X ± .003
ANGULAR ±3°
FINISH

		DATE
DRAWN	D. MATELICH	08/24/94
CHECK	B JONES	08/30/94
DESIGN		
APVD. QA	D ATKINS	08/31/94

ZETEC INC.

TITLE DUAL GUIDE TUBE STD. W/ MISC. DEFECTS

SCALE NTS | DWG NO 2-415-1015 | USED ON 2-415-0004 | SHT 1 OF 2

NOTE: SEE 2-415-0004 FOR PLACEMENT OF NYLON SLEEVE (F)

D	REVISIONS	REV. STATUS OF SHEETS
2	SHEET	

LTR	DATE	DESCRIPTION	APVD	CK	DR
H	4/5/96	ADDED ORIENTATION FOR SEC. VIEWS	BR	[illegible]	KZ

LOCATION	A	B	C	D	E	F	G	H	I	J	K
PHYSICALLY MEAS. DEPTH	.0200	.0210	—	—	.0205	THRU	THRU	.0305	.0105	.0260	.0150
DEPTH IN % OF WALL	40%	42%	—	—	41%	100%	100%	60%	21%	51%	30%
E.T. PHASE ANGLE MEAS.							40°	106°	150°		
DIA OF DEFECT .003											

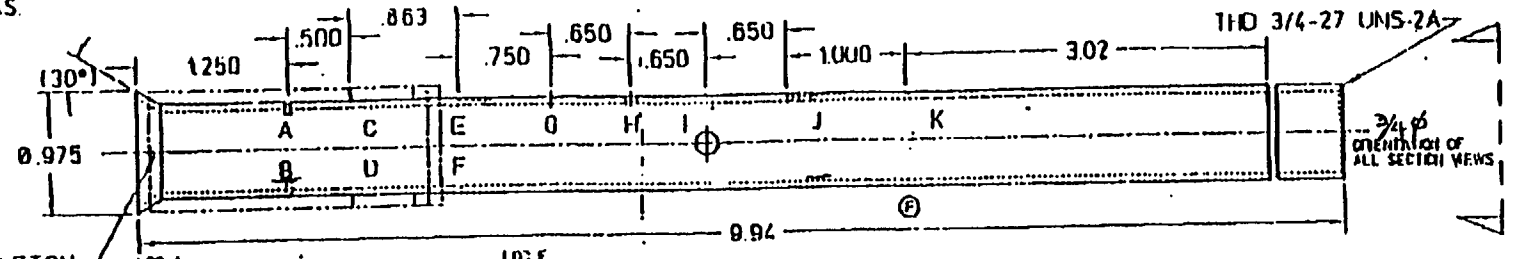

ALIGN ELECTRO-ETCH AND GROOVES

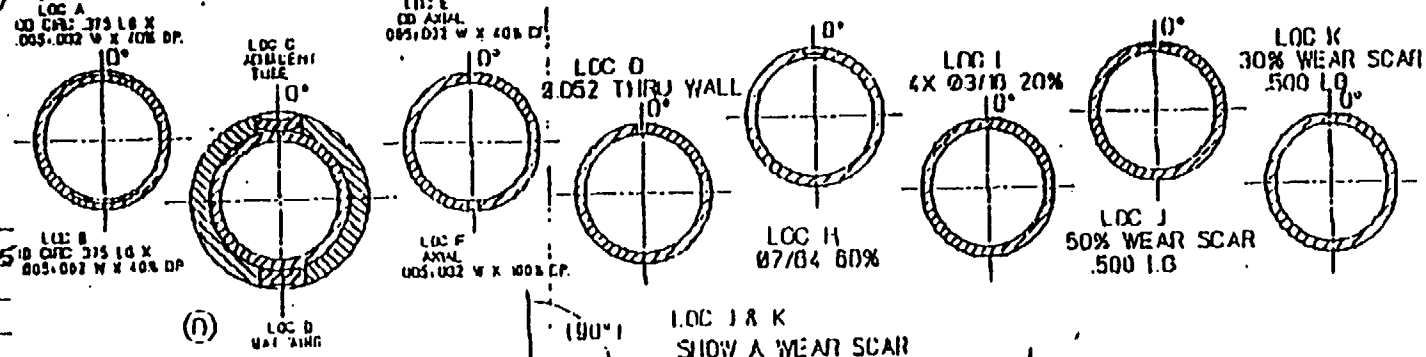

MATERIAL Inconel 600
AVERAGE MEAS WALL THK .0665
NOMINAL WALL THK .049
HEAT LOT NO. 7524913
TEST FREQ. USED 400 KHz
SERIAL NO. Z-15046
P O NO 8710
REL. NO NA
QUALITY REL. NO. NA
DATE MFG. 5-17-96
O.A. INSP. [illegible]
CUSTOMER Rockridge Technologies
RECORDED 40
PROBE USED [illegible]
REVIEWED BY [illegible]

NOTE:

UNLESS OTHERWISE SPECIFIED	DRAWN	DATE
ALL DIMENSIONS ARE IN INCHES	O MATELICH	08/24/94
TOLERANCES	CHECK	
DECIMAL FRACT. ± 1/16	B JONES	08/30/94
.XXXX ± .003	DESIGN	
.XXX ± .015		
.XX ± .05	APVD. QA	
X ± .003	O AIKINS	08/31/94
ANGULAR ± 1°		
FINISH		

ZETEC INC

TITLE: DUAL GUIDE TUBE STD. W/ MISC. DEFECTS

SIMILAR	DWG NO	REV
	2-415-1015	
SCALE NTS	ISSUED 2-415-0004	SHT 1 OF 2

NOTE: SEE 2-415-0004 FOR PLACEMENT OF NYLON SLEEVE

				0	REVISIONS	REV. STATUS OF SHEETS
				2	SHEET	

REVISIONS					
LTR	DATE	DESCRIPTION	APVD	CK	DR
11	1/5/96	ADDED ORIENTATION FOR SEC. VIEWS			KZ

LOCATION	A	B	C	D	E	F	G	H	I	J	K
PHYSICALLY MEAS. DEPTH	.0225	.0205	—	—	.0215	THRU	THRU	.0305	.0096	.0250	.0150
DEPTH IN % OF WALL	45%	41%	—	—	43%	100%	100%	60%	19%	50%	30%
E.T. PHASE ANGLE MEAS.							40°	111°	154°		
DIA OF DEFECT ±.003											

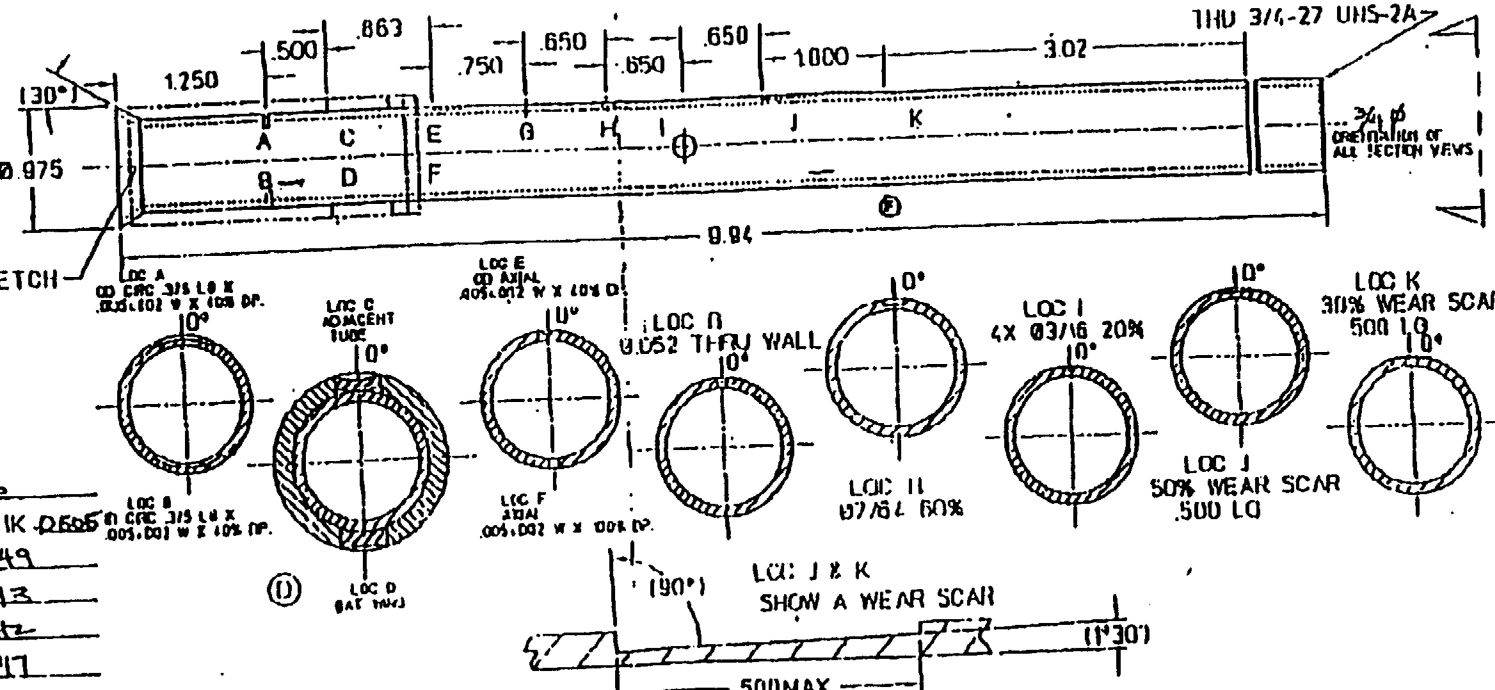

MATERIAL INCONEL 600
AVERAGE MEAS WALL THK .0505
NOMINAL WALL THK .049
HEAT LOT NO 752493
TEST FREQ. USED 400 kHz
SERIAL NO. Z-15017
P.O. NO. 8710
REL. NO. NA
QUALITY REL. NO NA
DATE MFG. 5-17-96
Q.A. INSP [signature]
CUSTOMER Rockridge Technologies
RECORDED 10
PROBE USED [illegible] #1186
REVIEWED BY [signature]

NOTE:

UNLESS OTHERWISE SPECIFIED DIM ARE IN INCHES TOLERANCES DECIMAL FRACT. ± 1/16 .XXXX ±.001 .XXX ±.015 .XX ±.030 ∠ ±.003 ANGULAR ±3° FINISH	DRAWN B HATFIELD	08/24/94
	CHECK B JONES	08/30/94
	DESIGN	
	APVD QA B ATKINS	08/31/94

ZETEC INC

TITLE DUAL GUIDE TUBE STD. W/ MISC. DEFECTS

SIMILAR	DWG NO 2-415-1015
SCALE NTS	REF DWG 2-415-0004 · SH 1 OF 2

EE 2-415-0004 FOR PLACEMENT
F NYLON SLEEVE

D	REVISIONS	REV. STATUS OF SHEETS
2	SHEET	

REVISIONS

LTR	DATE	DESCRIPTION	APVD	CK	DN
H	4/5/96	ADDED ORIENTATION FOR SEC. VIEWS	[illegible]	[illegible]	KZ

ION	A	B	C	D	E	F	G	H	I	J	K
CALLY MEAS DEPTH	.0220	.0200	—	—	.0210	THRU	THRU	.0305	.0110	.0250	.0155
H IN % OF WALL	44%	40%	—	—	42%	100%	100%	60%	22%	50%	31%
HASE ANGLE MEAS							40°	112°	153°		

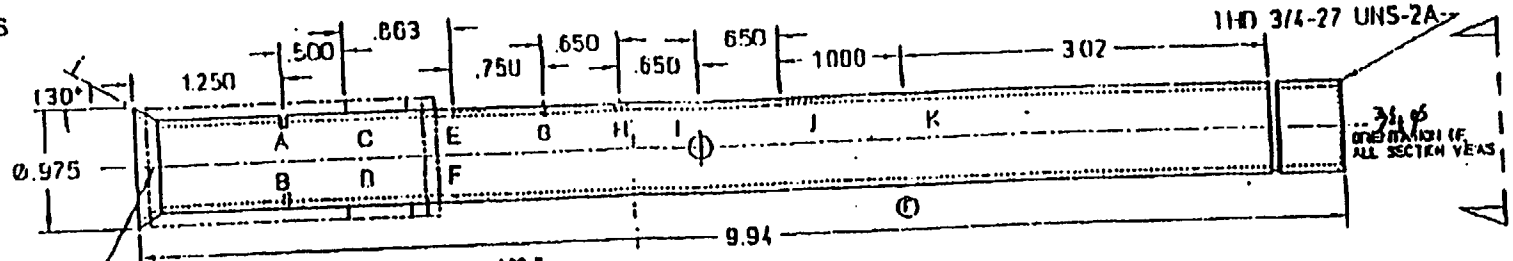

ALIGN ELECTRO-ETCH AND GROOVES

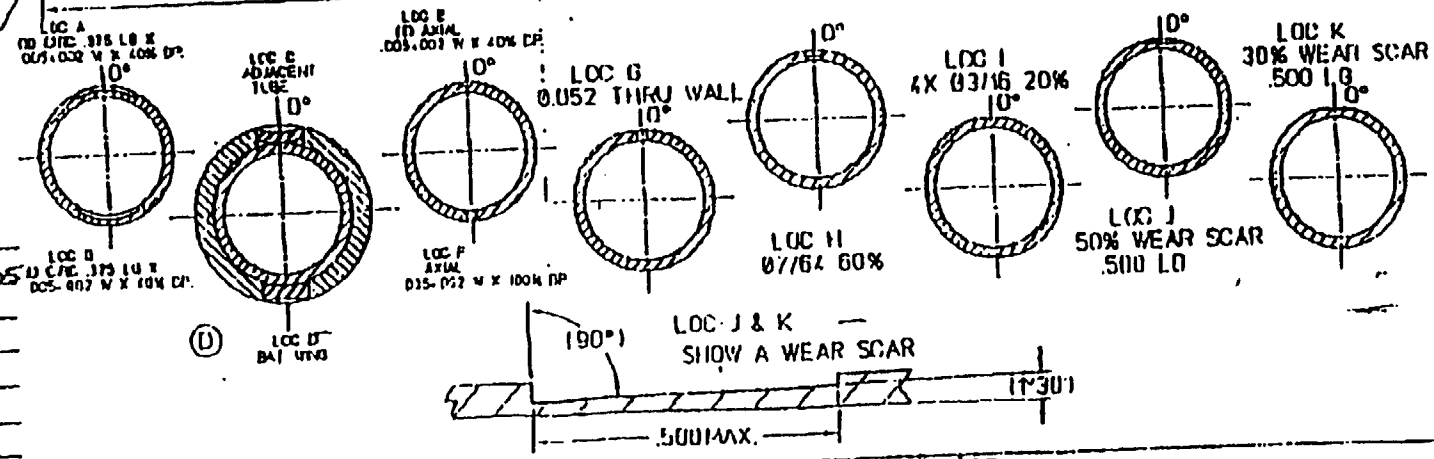

ERIAL INCONEL 600
AGE MEAS WALL THK .0505
NAL WALL THK. .049
LOT NO. 752A43
FREQ. USED 400 KHZ
N. NO Z-1504B
NO 8710
NO. NA
LITY REL NO NA
E MFG 5-17-96
INSP. [illegible]
TOMER Rockridge Technologies
ORDED 40
BE USED Atlantic #71186
IEWED BY [illegible]

NOTE:

UNL. OTHERWISE SPECIFIED	DRAWN	DATE
DIM ARE IN INCHES	G MATELICH	08/24/94
TOLERANCES	CHECK	
DECIMAL FRACT. ± 1/16	B JONES	08/30/94
XXXX ± .003	DESIGN	
XXX ± .015		
XX ± .050	APVD. QA	
X ± .003	B ATKINS	08/31/94
ANGULAR ±3°		
FINISH		

ZETEC INC

TITLE DUAL GUIDE TUBE STD. W/ MISC. DEFECTS

SIMILAR

DWG NO 2-415-1015

SCALE NTS

USED ON 2-415-0004

SHT 1 OF 2

NOTE: SEE 2-415-0004 FOR PLACEMENT OF NYLON SLEEVE (F)

				U	REVISIONS	REV. STATUS OF SHEETS		
				2	SHEET			

LTR	DATE	DESCRIPTION	APVD	CK	DR
H	4/5/96	ADDED ORIENTATION FOR SEC. VIEWS			KZ

LOCATION	A	B	C	D	E	F	G	H	I	J	K
PHYSICALLY MEAS DEPTH	.0229	.0200	—	—	.0205	THRU	THRU	.0300	.0100	.0255	.0155
DEPTH IN % OF WALL	44%	40%	—	—	41%	100%	100%	51%	20%	51%	31%
E.T. PHASE ANGLE MEAS							110°	106°	150°		
DIA OF DEFECT ±.003											

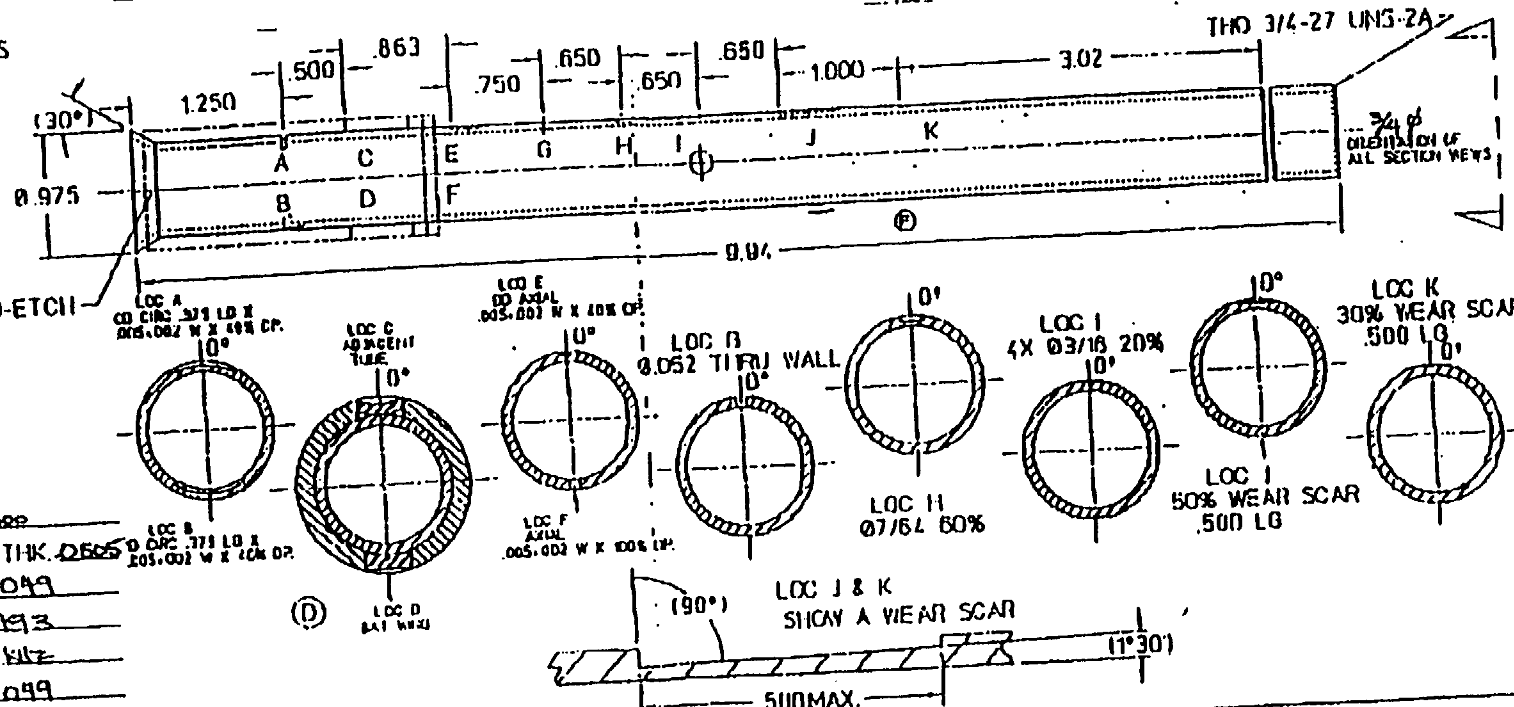

MATERIAL INCONEL 600
AVERAGE MEAS WALL THK. .0505
NOMINAL WALL THK. .049
HEAT LOT NO. 752493
TEST FREQ. USED 400 kHz
SERIAL NO Z-15099
P.O. NO. 8710
REL. NO. NA
QUALITY REL. NO. NA
DATE MFG. 5-17-96
Q.A. INSP. [signature]
CUSTOMER Rockridge Technologies
RECORDED 10
PROBE USED [illegible] #7186
REVIEWED BY [signature]

NOTE:

UNLESS OTHERWISE SPECIFIED DIM ARE IN INCHES
TOLERANCES
DECIMAL FRACT. ± 1/16
.XXXX ± .003
.XXX ± .015
.XX ± .050
.X ± .003
ANGULAR ±3°
F1491

DRAWN	DATE
D. MATELICH	08/24/94
CHECK B. JONES	08/30/94
DESIGN	
APVD. DA D. ATKINS	08/31/94

ZETEC INC

TITLE: DUAL GUIDE TUBE STD. W/ MISC. DEFECTS

DWG NO 2-415-1015

SCALE NTS | USED ON 2-415-0004 | SHT 1 OF 2

E: SEE 2-415-0004 FOR PLACEMENT
) OF NYLON SLEEVE

								0	REVISIONS	REV. STATUS OF SHEETS	REVISIONS			
								?	SHEET		LTR	DATE	DESCRIPTION	APVD CK DR
											11	9/5/96	ADDED ORIENTATION FOR SEC. VIEWS	KZ

CATION	A	B	C	D	E	F	G	H	I	J	K
IYSICALLY MEAS. DEPTH	.0100	.0105	—	—	.0205	THRU	THRU	.0312	.0100	.0260	.0165
EPTH IN % OF WALL	40%	41%	—	—	41%	100%	100%	61%	20%	51%	33%
							40°	111°	153°		
T. PHASE ANGLE MEAS.											
IA OF DEFECT .003											

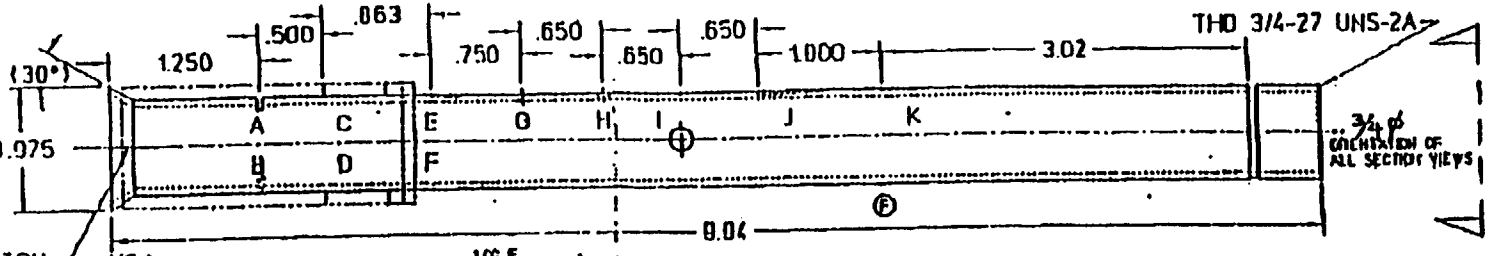

ALION ELECTRO-ETCH
AND GROOVES

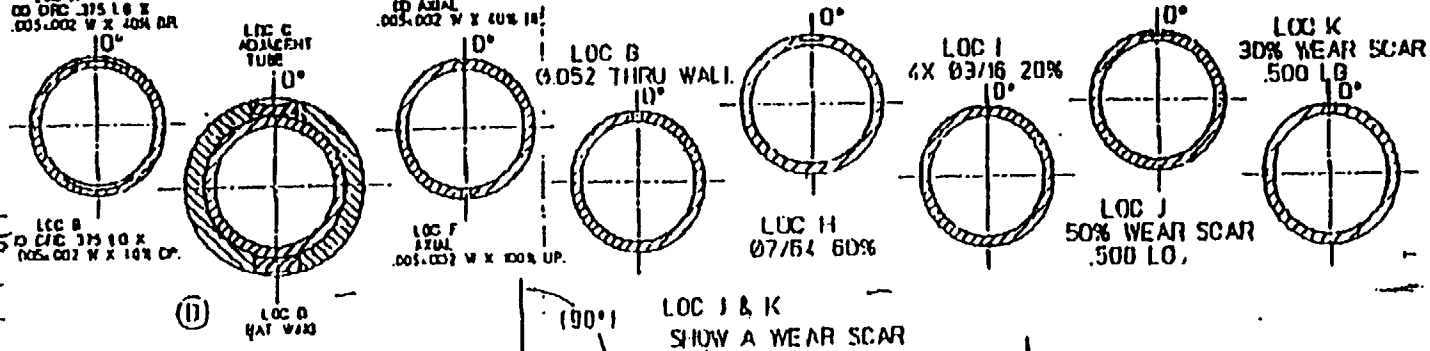

ATERIAL INCONEL 600
/ERAGE MEAS. WALL THK. .0505
/MINAL WALL THK. .049
:AT LOT NO. 152493
:ST PROC. USED 400 KRT
:RIAL NO. 2-15050
D NO. 9110
:L. NO. NA
UALITY REL. NO. NA
ATE MFG. 5-17-96
A. INSP.
USTOMER Rockridge Technologies
:CORDED 40
ROBE USED A-0615-#1186
EVIEWED BY

NOTE:

UNLESS OTHERWISE SPECIFIED	DRAWN	DATE
ALL DIMS ARE IN INCHES	D. MATELICH	08/22/94
TOLERANCES	CHECK	
DECIMAL FRACT. ± 1/16	D. JONES	08/30/94
.XXXX ± .001	DESIGN	
.XXX ± .015		
.XX ± .031	APVD. QA	
ANGULAR ± 1°	D. ATKINS	08/31/94
FINISH		

ZETEC INC.

TITLE: DUAL GUIDE TUBE STD. W/ MISC. DEFECTS

SIZE	DWG NO.	REV
	2-415-1015	
SCALE NTS	USED ON: 2-415-0004	SHT 1 OF 2

NOTE: SEE 2-415-0004 FOR PLACEMENT (F) OF NYLON SLEEVE

D	REVISIONS	REV. STATUS OF SHEETS
2	SHEET	

REVISIONS					
LTR	DATE	DESCRIPTION	APVD	CK	DR
II	4/5/46	ADDED ORIENTATION FOR SEC. VIEWS			KZ

LOCATION	A	B	C	D	E	F	G	H	I	J	K
PHYSICALLY MEAS. DEPTH	.0205	.0205	—	—	.0210	THRU.	THRU	.0305	.0100	.0255	.0150
DEPTH IN % OF WALL	41%	41%	—	—	42%	100%	100%	60%	20%	51%	30%
E.T. PHASE ANGLE MEAS.							40°	108°	151°		

DIA OF DEFECT ±.003

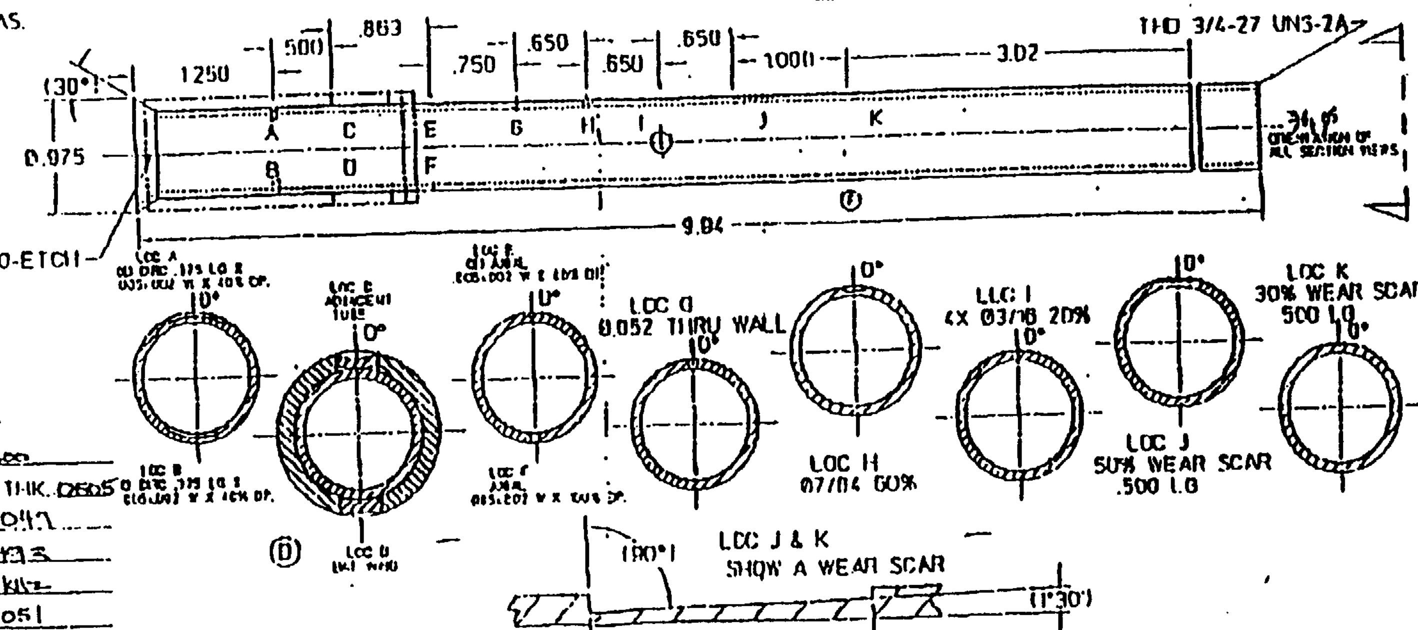

MATERIAL Inconel 600
AVERAGE MEAS. WALL THK. .0505
NOMINAL WALL THK. .049
HEAT LOT NO. 782493
TEST FREQ. USED 400 kHz
SERIAL NO. Z-15051
P.O NO. 9310
REL. NO. NA
QUALITY REL. NO. NA
DATE MFG. 5-11-96
Q.A INSP. [signature]
CUSTOMER Rockridge Technologies
RECORDED 10
PROBE USED [illegible]
REVIEWED BY [signature]

NOTE:

UNL. OTHERWISE SPECIFIED DIM ARE IN INCHES TOLERANCES DECIMAL FRACT. ± 1/16 .XXXX ± .003 .XXX ±.015 .XX ±.051 .X ±.003 ANGULAR ±3° FINISH	DRAWN B. MATELICH	DATE 08/24/94	ZETEC INC.
	CHECK B JONES	08/30/94	TITLE DUAL GUIDE TUBE STD. W/ MISC. DEFECTS
	DESIGN		SIMILAR / DWG NO 2-415-1015
	APVD. QA B ATKINS	08/31/94	SCALE NTS / USED ON 2-415-0004 / SHT 1 OF 2

** TOTAL PAGE.09 **

ARC EDM .005 x .002 WIDE X 500 LONG | 3 | 2 | SHEET | | B | 01/00/97 | REV. SHT. 2 : NO CHANGES

LOCATION	A	B	C	D	E	F	G	H	I	J	K	L	M	N
PHYSICALLY MEAS DEPTH	THRU	THRU	THRU	.0310	.0300	.0300	.0300	.0195	.0205	.0195	.0210	.0110	.0100	THRU
DEPTH IN % OF WALL	100%	100%	100%	61%	59%	59%	59%	38%	40%	38%	41%	22%	20%	100%

SHOWS 100% THRU HOLE LOC N

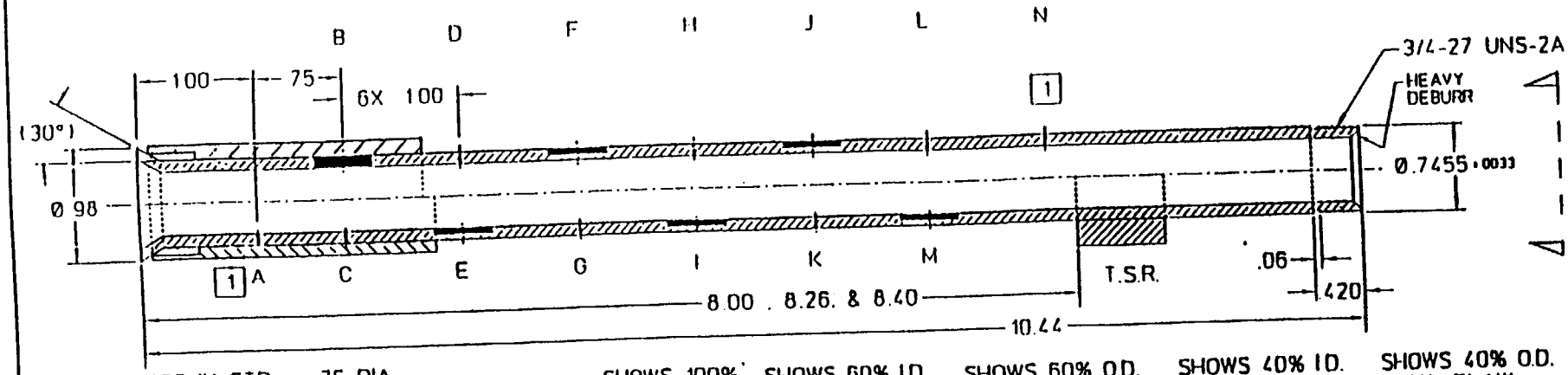

1 0.052±.003 IN STD. ≤ .75 DIA.
1 0.067±.003 IN STD. > .75 DIA.

MATERIAL INCONEL 600
AVERAGE MEAS WALL THK. .051
NOMINAL WALL THK .049
HEAT LOT NO 752493
TEST FREQ USED NA
SERIAL NO Z-15787
P O NO 54414
REL. NO NA
QUALITY REL NO NA
DATE MFG. 3-13-97
Q A INSP [signature]
CUSTOMER ERMANDME TECHNOLOGIES
RECORDED NA
PROBE USED NA
REVIEWED BY Charlotte Bottles

LOC A SHOWS 100% THRU HOLE

SHOWS 100% AXIAL FLAW LOC B

LOC C SHOWS 100% CIRC FLAW

SHOWS 60% ID CIRC. FLAW LOC D

LOC E SHOWS 60% ID AXIAL FLAW

SHOWS 60% O.D. AXIAL FLAW LOC F

LOC G SHOWS 60% O.D. CIRC FLAW

SHOWS 40% I.D. CIRC. FLAW LOC H

LOC I SHOWS 40% I.D. AXIAL FLAW

SHOWS 40% O.D. AXIAL FLAW LOC J

LOC K SHOWS 40% O.D. CIRC. FLAW

SHOWS 20% I.D CIRC. FLAW LOC L

LOC M SHOWS 20% I.D AXIAL FLAW

NOTE

UNL OTHERWISE SPECIFIED DIM ARE IN INCHES
TOLERANCES
DECIMAL FRACT ±1/16
XXXX ±.003
XXX ±.015
XX ±.050
% ±.03
ANGULAR ±1°
FINISH | DIST 000

		DATE
DRAWN	K ZEGKE	12/03/96
CHECK	T O DELL	12/10/96
DESIGN	B.J	12/10/96
APVD QA	G.A	12/10/96

ZETEC INC
POST OFFICE BOX 48 ISSAQUAH WASHINGTON 98027-0048 USA TELEPHONE (206) 392-5316

TITLE
G.T. CALIBRATION STANDARD
Dw4040-1-A Pw343

SIMILAR | DWG NO 2-415-1059
SCALE NTS | USED IN 2-415-0016 | SHT 1 OF 3

ALL AXIAL AND CIRC FLAWS
ARE EDM .005 ± .002 WIDE X .500 LONG

A	B	REVISIONS	REV STATUS OF SHEETS
3	2	SHEET	

REVISIONS

LTR	DATE	DESCRIPTION	APVD	CK	DR
B	01/08/97	REV. SHT. #2 . NO CHANGES SHT. #1. DRAFT ERROR	---	---	K2

LOCATION	A	B	C	D	E	F	G	H	I	J	K	L	M	N
PHYSICALLY MEAS DEPTH	THRU	THRU	THRU	.0290	.0315	.0245	.0300	.0205	.0205	.0200	.0215	.0100	.0110	THRU
DEPTH IN % OF WALL	100%	100%	100%	57%	62%	56%	59%	40%	40%	39%	42%	20%	22%	100%

SHOWS 100% THRU HOLE LOC.N

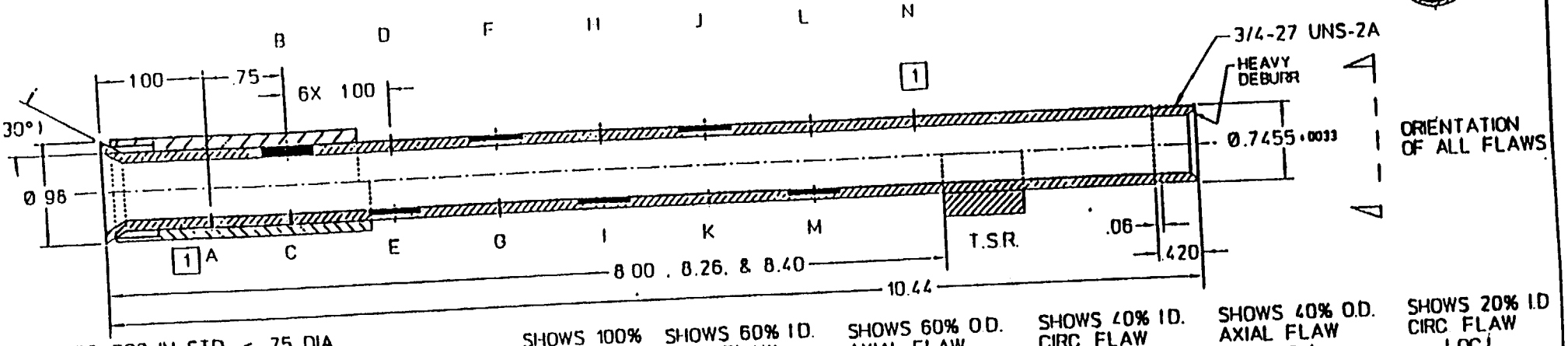

1 Ø.052±.003 IN STD. ≤ .75 DIA.
Ø.067±.003 IN STD. > .75 DIA.

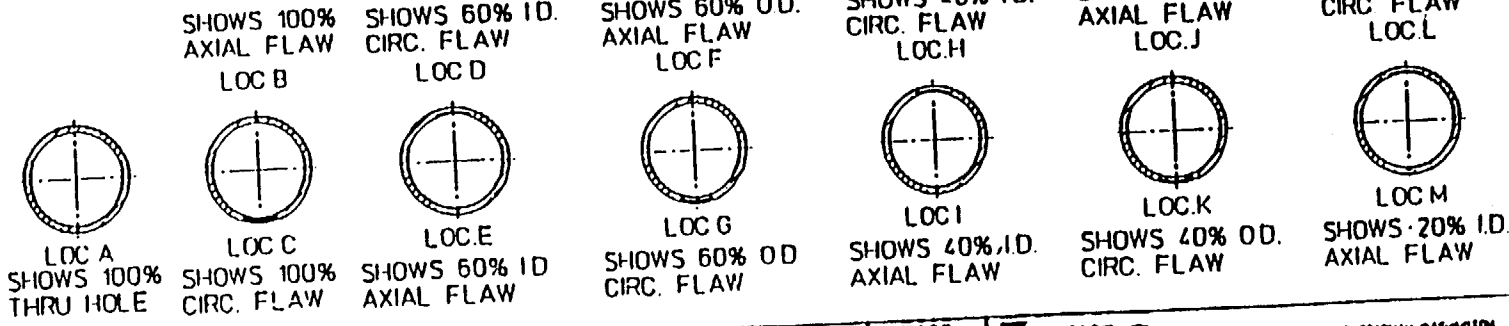

MATERIAL INCONEL 600
AVERAGE MEAS WALL THK. .051
NOMINAL WALL THK. .049
HEAT LOT NO 752493
TEST FREQ USED NA
SERIAL NO Z-15788
P.O. NO 54414
REL NO NA
QUALITY REL NO NA
DATE MFG 3-13-97
Q.A. INSP [signature]
CUSTOMER FRAMATOME TECHNOLOGIES
RECORDED NA
PROBE USED NA
REVIEWED BY Charlotte Bettes

NOTE

UNL OTHERWISE SPECIFIED
DIM ARE IN INCHES
TOLERANCES
DECIMAL FRACT ±1/16
.XXXX ± .003
.XXX ± .015
.XX ± .050
± ± .003
ANGULAR ±3°
FINISH
DIST 000

		DATE
DRAWN	K ZEGKE	12/03/96
CHECK	T O DELL	12/10/96
DESIGN	B J	12/10/96
APVD QA	G A	12/10/96

ZETEC INC
POST OFFICE BOX 110 ISSAQUAH WASHINGTON 98027-0110 USA TELEPHONE (206) 392-5310

TITLE G.T. CALIBRATION STANDARD
D#4040-1-A P#343

SIMILAR
DWG NO 2-415-1059
SCALE NTS
USED ON 2-415-0016
SHT 1 OF 3

ALL AXIAL AND CIRC FLAWS
ARE EDM 005 ±.002 WIDE X 500 LONG

A	B	REVISIONS	REV. STATUS OF SHEETS	LTR	DATE	DESCRIPTION	APVD	CK	DR
3	2	SHEET		B	01/08/97	REV. SHT. #2 . NO CHANGES SHT. #1. DRAFT ERROR	---	---	KZ

LOCATION	A	B	C	D	E	F	G	H	I	J	K	L	M	N
PHYSICALLY MEAS DEPTH	THRU	THRU	THRU	.0310	.0290	.0310	.0310	.0185	.0200	.0205	.0205	.0100	.0105	THRU
DEPTH IN % OF WALL	100%	100%	100%	61%	57%	61%	61%	36%	39%	40%	40%	20%	21%	100%

SHOWS 100% THRU HOLE LOC N

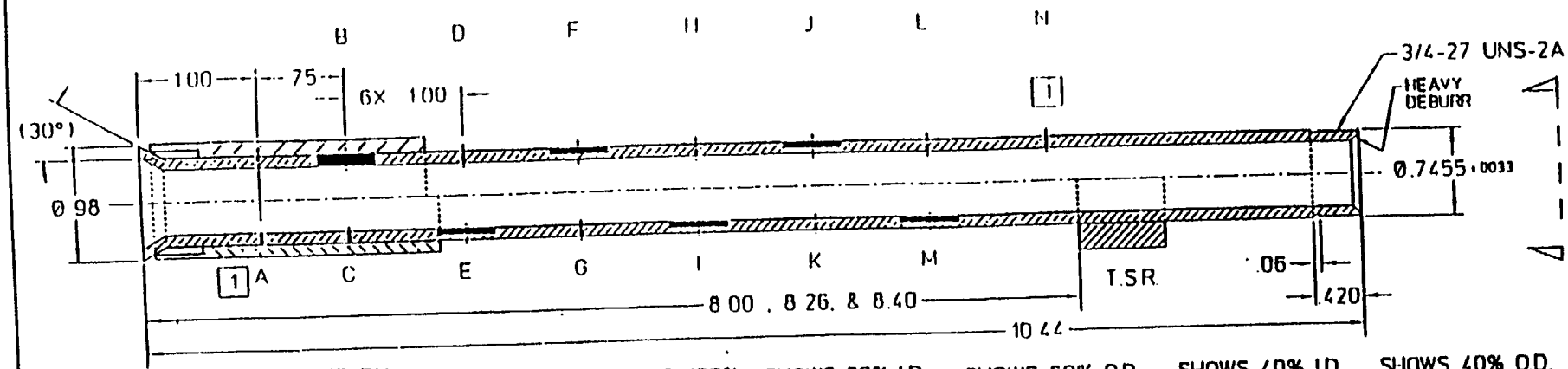

1 Ø.052±.003 IN STD ≤ .75 DIA.
Ø.067±.003 IN STD > .75 DIA.

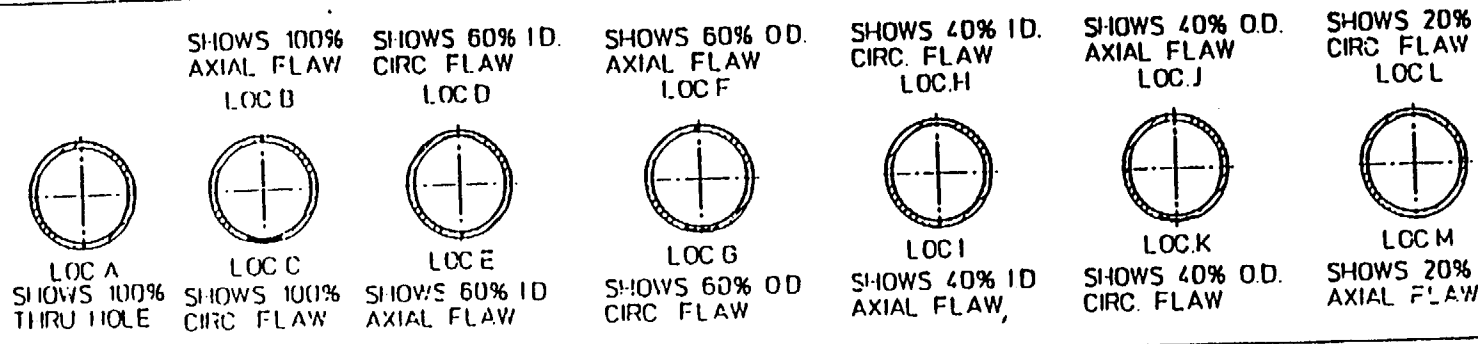

MATERIAL INCONEL 600
AVERAGE MEAS WALL THK .051
NOMINAL WALL THK .049
HEAT LOT NO 752493
TEST FREQ USED NA
SERIAL NO Z-15806
P.O. NO 54414
REL NO NA
QUALITY REL NO NA
DATE MFG 3-13-97
Q.A. INSP [signature]
CUSTOMER FRAMATOME TECHNOLOGIES
RECORDED NA
PROBE USED NA
REVIEWED BY Charlotte Bittes

NOTE

UNL OTHERWISE SPECIFIED
DIM ARE IN INCHES
TOLERANCES
DECIMAL FRACT ±1/16
.XXXX ±.003
.XXX ±.015
.XX ±.050
.X ±.003
ANGULAR ±3°
FINISH
DIST 000

		DATE
DRAWN	K ZEGKE	12/03/96
CHECK	T O DELL	12/10/96
DESIGN	B J	12/10/96
APVD QA	G.A.	12/10/96

ZETEC INC
POST OFFICE BOX 140 ISSAQUAH WASHINGTON 98027-0140 U.S.A. TELEPHONE (206) 392-5316

TITLE
G.T. CALIBRATION STANDARD
D#4040-1-A P#3435

SIMILAR
DWG NO 2-415-1059
SCALE NTS
USED ON 2-415-0016
SHT 1 OF 3

ALL AXIAL AND CIRC FLAWS
ARE EDM .005 ± .002 WIDE X .500 LONG

A	B	REVISIONS	REV STATUS OF SHEETS
3	2	SHEET	

REVISIONS					
LTR	DATE	DESCRIPTION	APVD	CK	DR
B	01/08/97	REV. SHT. #2 . NO CHANGES SHT. #1. DRAFT. ERROR	---	---	KZ

LOCATION	A	B	C	D	E	F	G	H	I	J	K	L	M	N
PHYSICALLY MEAS DEPTH	THRU	THRU	THRU	.0310	.0290	.0305	.0295	.0200	.0205	.0195	.0100	.0100	.0105	THRU
DEPTH IN % OF WALL	100%	100%	100%	61%	57%	60%	58%	39%	40%	38%	39%	20%	21%	100%

SHOWS 100% THRU HOLE LOC N

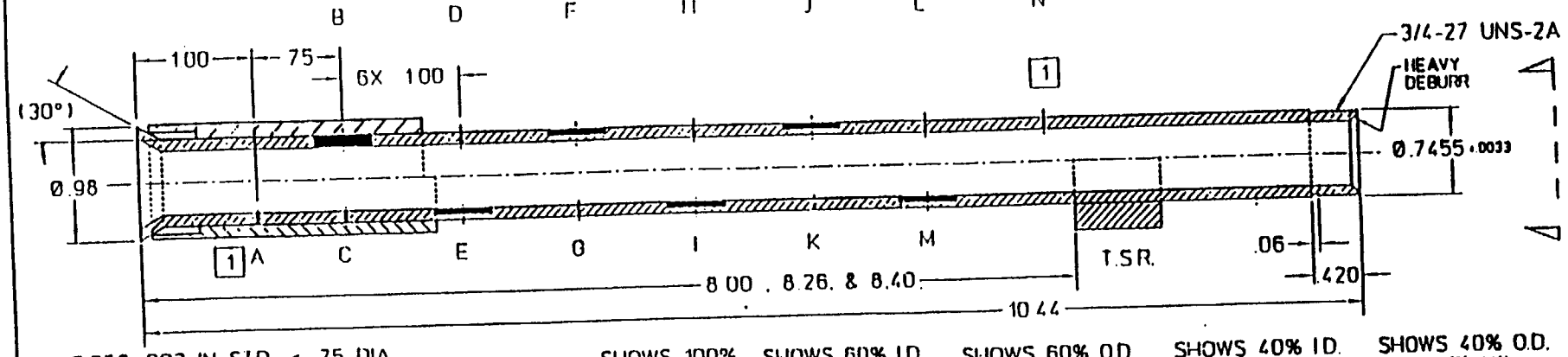

1 .052 ± .003 IN STD ≤ .75 DIA.
.067 ± .003 IN STD > .75 DIA.

MATERIAL INCONEL 600
AVERAGE MEAS WALL THK .051
NOMINAL WALL THK .049
HEAT LOT NO 752493
TEST FREQ USED NA
SERIAL NO Z-15807
P.O NO 54414
REL. NO NA
QUALITY REL NO NA
DATE MFG 3-13-97
QA INSP Huey Allen
CUSTOMER FRAMATOME TECHNOLOGIES
RECORDED NA
PROBE USED NA
REVIEWED BY Charlotte Bette

LOC A
SHOWS 100% THRU HOLE

SHOWS 100% AXIAL FLAW
LOC B

LOC C
SHOWS 100% CIRC FLAW

SHOWS 60% ID CIRC FLAW
LOC D

LOC E
SHOWS 60% ID AXIAL FLAW

SHOWS 60% OD AXIAL FLAW
LOC F

LOC G
SHOWS 60% OD CIRC FLAW

SHOWS 40% ID CIRC FLAW
LOC H

LOC I
SHOWS 40% ID AXIAL FLAW

SHOWS 40% OD AXIAL FLAW
LOC J

LOC K
SHOWS 40% OD CIRC. FLAW

SHOWS 20% ID CIRC FLAW
LOC L

LOC M
SHOWS 20% ID AXIAL FLAW

NOTE

UNLESS OTHERWISE SPECIFIED DIM ARE IN INCHES
TOLERANCES
DECIMAL FRACT ± 1/16
XXXX ± .003
XXX ± .015
XX ± .050
X ± .003
ANGULAR ± 3°
FINISH
DIST 000

DRAWN	K ZEGKE	DATE 12/03/96
CHECK	T O DELL	12/10/96
DESGN	B J	12/10/96
APVD QA	G.A	12/10/96

ZETEC INC
POST OFFICE BOX 498 ISSAQUAH WASHINGTON 98027-0498 USA TELEPHONE (206) 392-5316

TITLE
G.T. CALIBRATION STANDARD
D#4040-1-A P#3435

SIMILAR	DWG NO	
	2-415-1059	
SCALE NTS	USED ON 2-415-0016	SHT 1 OF 3

REVISIONS					
LTR	DATE	DESCRIPTION	APVD	CK	DR
E	8/24/94	ADDED WIDTH CALL-OUT LOC. A-B-E-F	BA	RT	KZ

LOCATION	A	B	C	D	E	F	G	H	I	J	K
PHYSICALLY MEAS. DEPTH	.0205	.0205	—	—	.0205	THRU	THRU	.0305	.0105	.0245	.0160
DEPTH IN % OF WALL	40%	40%	—	—	40%	100%	100%	58%	20%	48%	31%
DIA OF DEFECT	.003										

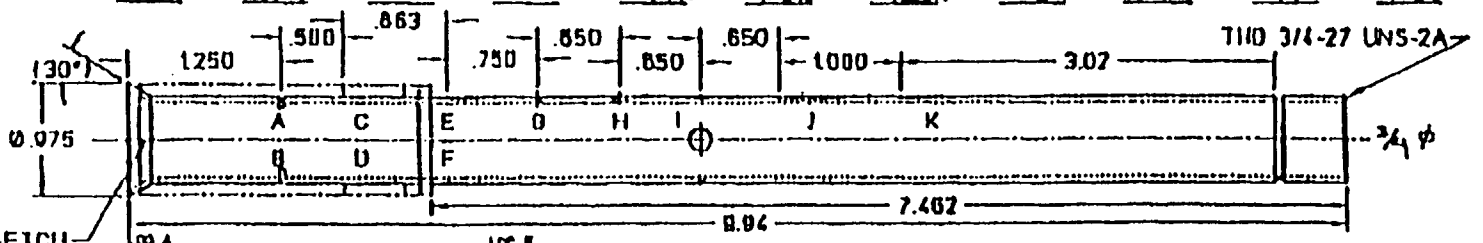

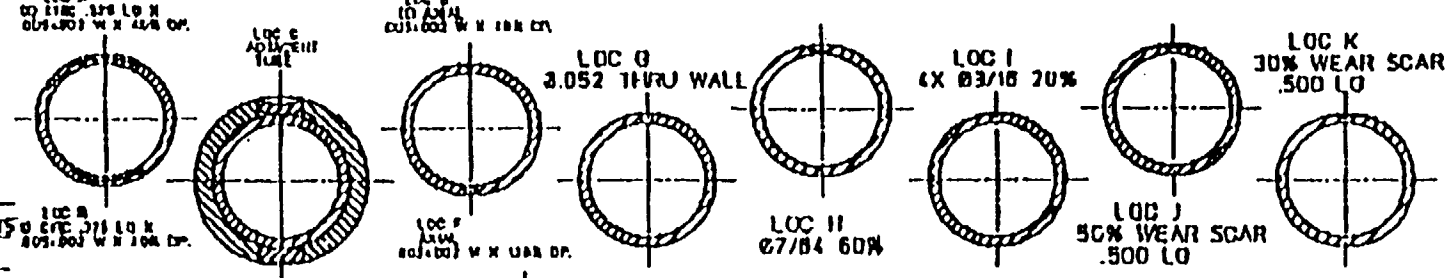

MATERIAL Inconel 600
AVERAGE MEAS WALL THK. .0215
NOMINAL WALL THK. .049
HEAT LOT NO. 152493
TEST FREQ USED NA
SERIAL NO. Z-13323
P.O NO. 679
REL. NO. MR5524
QUALITY REL. NO. NA
DATE REQ. 2-1-95
I.A. INSP. [signature]
CUSTOMER Conam Nuclear
RECORDED NA
PROBE USED NA
REVIEWED BY [signature]

NOTE:

UNL. OTHERWISE SPECIFIED DIM ARE IN INCHES
TOLERANCES
DECIMAL FRACT. ± 1/16
.XXXX ±.001
.XXX ±.005
.XX ±.030
ANGULAR ±3°
FINISH

	NAME	DATE
DRAWN	G. NATELSON	08/24/94
CHECK	B. JONES	08/30/94
DESIGN		
APVD. QA	B. ATKINS	08/31/94

ZETEC INC.

TITLE: DUAL GUIDE TUBE STD. W/ MISC. DEFECTS

SIZE A | DWG NO 2-415-1015 | SCALE NTS | USED ON 2-415-0004 | SHT 1 OF 2

					C	REVISIONS	REV. STATUS OF SHEETS
				.	2	SHEET	

REVISIONS

LTR	DATE	DESCRIPTION	APVD	CK	DR
E	11/29/94	ADDED WIDTH CALL-OUT LOC. A-B-E-F	[illegible]	[illegible]	KZ

LOCATION	A	B	C	D	E	F	G	H	I	J	K
PHYSICALLY MEAS. DEPTH	.0210	.0205	--	--	.0215	THRU	THRU	.0300	.0100	.0240	.0140
DEPTH IN % OF WALL	41%	40%	—	—	42%	100%	100%	58%	19%	47%	27%
DIA OF DEFECT ±.003											

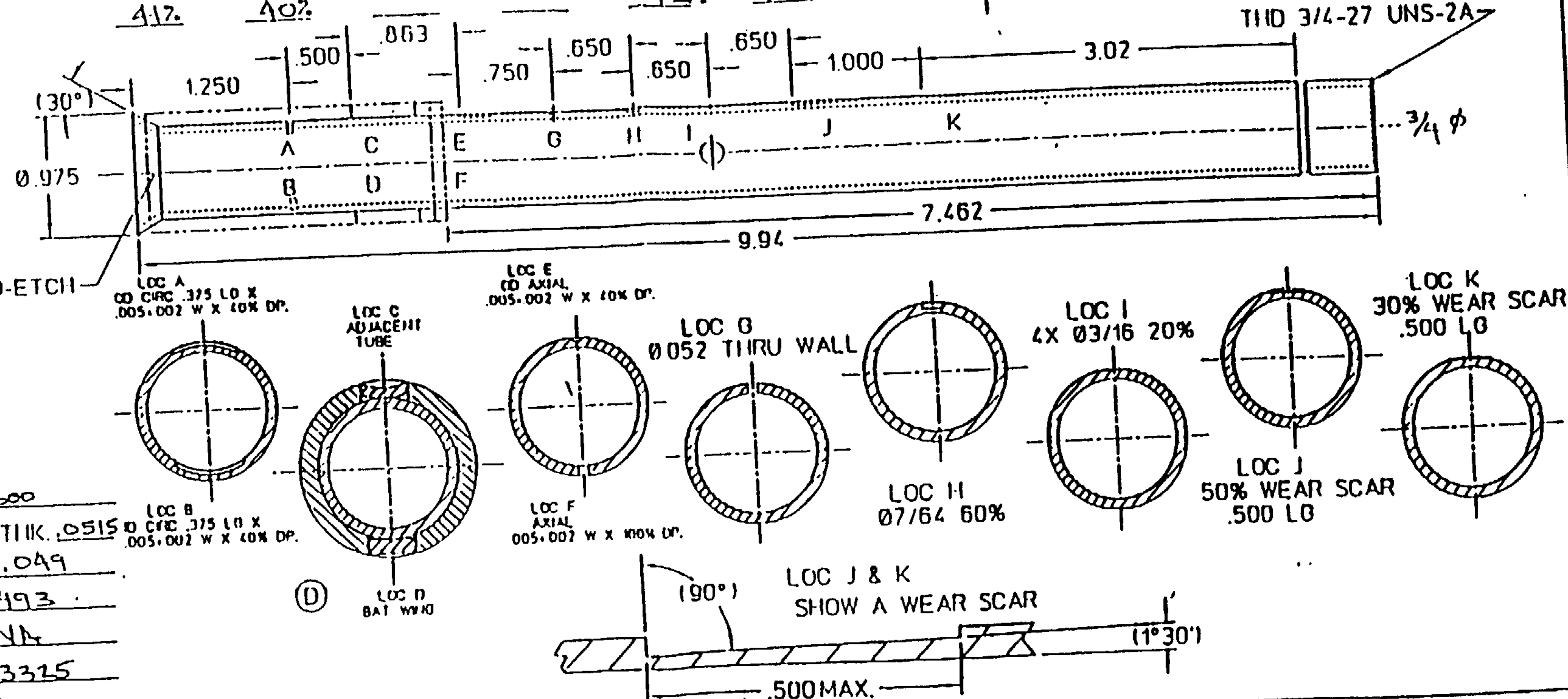

MATERIAL INCONEL 600
AVERAGE MEAS. WALL THK. .0515
NOMINAL WALL THK. .049
HEAT LOT NO. 752493
TEST FREQ. USED NA
SERIAL NO. Z-13325
P.O. NO. 679
REL. NO. MR5524
QUALITY REL. NO. NA
DATE MFG. 2-1-95
Q.A. INSP. [signature]
CUSTOMER CONN. NUCLEAR
RECORDED NA
PROBE USED NA
REVIEWED BY [signature]

NOTE:

UNL. OTHERWISE SPECIFIED
DIM ARE IN INCHES
TOLERANCES
DECIMAL FRACT. ± 1/16
XXXX ±.003
XXX ±.015
XX ±.030
X ±.003
ANGULAR ±3°
FINISH

		DATE
DRAWN	G. MATELICH	08/24/94
CHECK	B JONES	08/30/94
DESIGN		
APVD. DA	G ATKINS	08/31/94

ZETEC INC.

TITLE DUAL GUIDE TUBE STD. W/ MISC. DEFECTS

SIMILAR
DWG NO 2-415-1015
SCALE NTS
USED ON 2-415-0004
SHT 1 OF 2

REVISIONS						
LTR	DATE	DESCRIPTION	APVD	CK	DR	
E	11/29/94	ADDED WIDTH CALL-OUT LOC. A-B-E-F	[illegible]	[illegible]	KZ	

REV. STATUS OF SHEETS	REVISIONS	C
	SHEET	2

:CATION	A	B	C	D	E	F	G	H	I	J	K
YSICALLY MEAS. DEPTH	.0205	.0210	—	—	.0210	THRU	THRU	.0300	.0105	.0250	.0145
:PTH IN % OF WALL	40%	41%	—	—	41%	100%	100%	58%	20%	49%	28%

A OF DEFECT ±.003

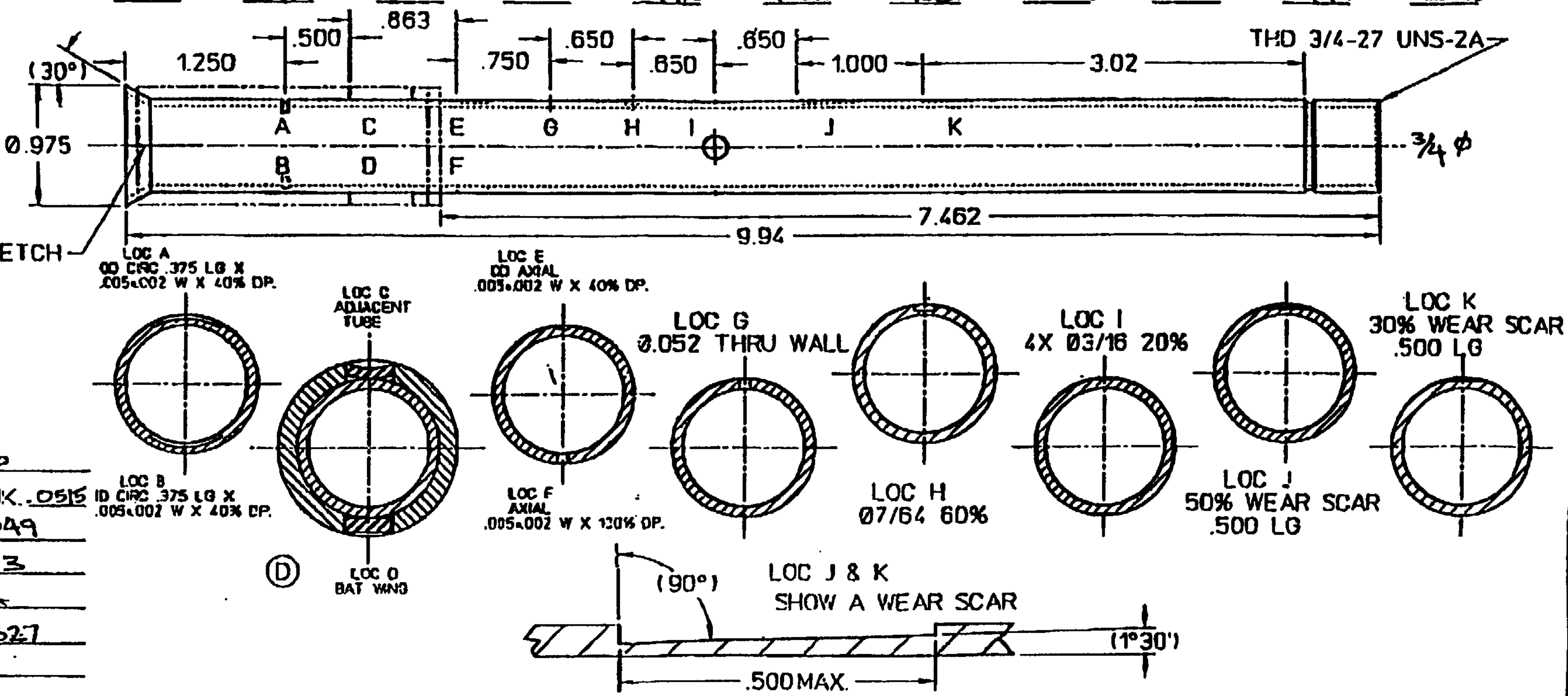

:TERIAL INCONEL 600
:RAGE MEAS. WALL THK. .0515
:INAL WALL THK. .049
:T LOT NO. 752493
:T FREQ. USED NA
:IAL NO. Z-13327
NO. 679
. NO. MR5524
:ALITY REL. NO. NA
:E MFG. 2-1-95
. INSP. [illegible]
:STOMER CONAM NUCLEAR
:CORDED NA
:BE USED NA
:IEWED BY [illegible]

NOTE:

UNL. OTHERWISE SPECIFIED DIM ARE IN INCHES
TOLERANCES
DECIMAL FRACT. ± 1/16
.XXXX ±.003
.XXX ±.015
.XX ±.050
∡ ±.003
ANGULAR ±3°
FINISH

		DATE
DRAWN	G. MATELICH	08/24/94
CHECK	B. JONES	08/30/94
DESIGN		
APVD. QA	G. ATKINS	08/31/94

ZETEC INC. POST OFFICE BOX 140 ISSAQUAH WASHINGTON 98027-0140 U.S.A. TELEPHONE (206) 392-5316

TITLE DUAL GUIDE TUBE STD. W/ MISC. DEFECTS

SIMILAR | DWG NO 2-415-1015

SCALE NTS | USED ON 2-415-0004 | SHT 1 OF 2

					C	REVISIONS	REV. STATUS OF SHEETS
				.	2	SHEET	

REVISIONS

LTR	DATE	DESCRIPTION	APVD	CK.	DR
E	11/29/94	ADDED WIDTH CALL-OUT LOC. A-B-E-F	UR	[illegible]	KZ

LOCATION	A	B	C	D	E	F	G	H	I	J	K
PHYSICALLY MEAS. DEPTH	.0205	.0210	—	—	.0210	THRU	THRU	.0300	.0105	.0240	.0150
DEPTH IN % OF WALL	40%	41%	—	—	41%	100%	100%	58%	20%	47%	29%
... OF DEFECT ±.003											

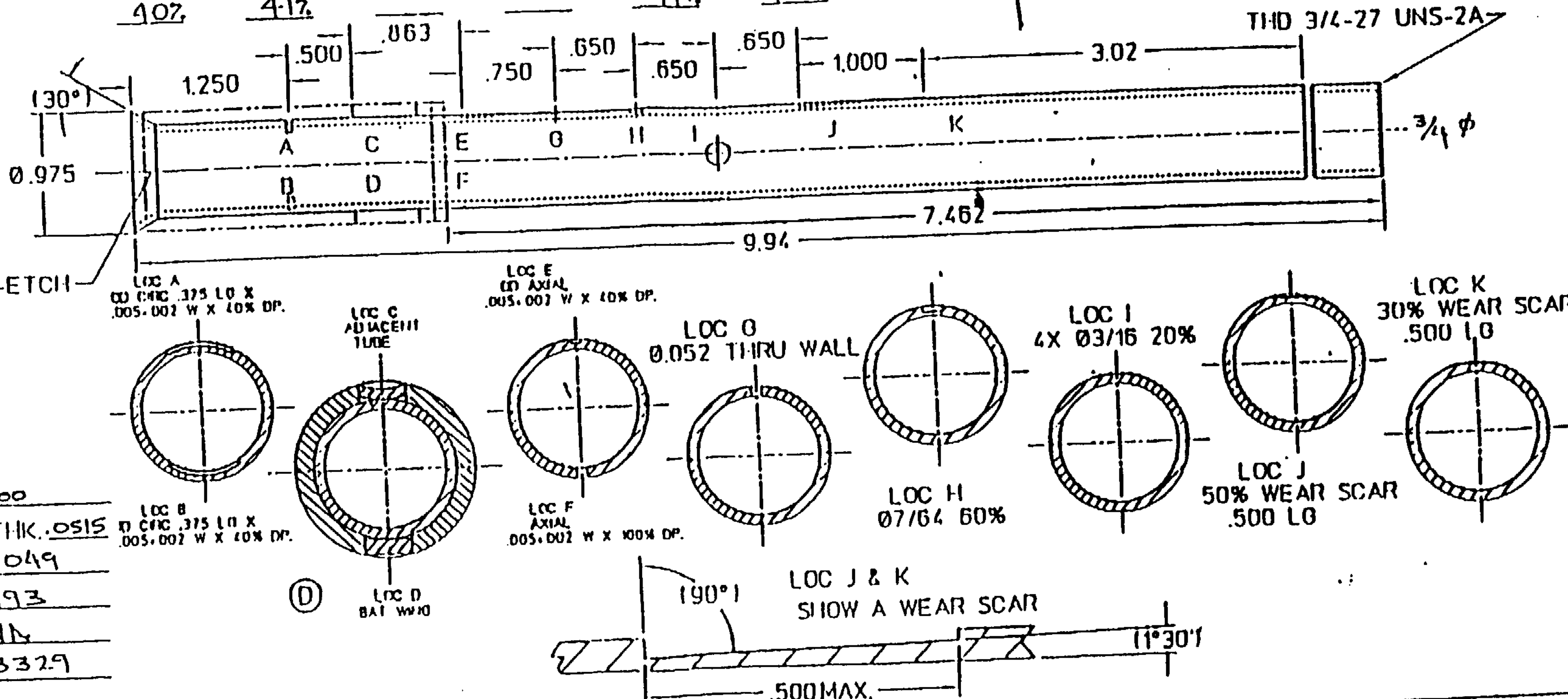

MATERIAL: INCONEL 600
AVERAGE MEAS. WALL THK.: .0515
NOMINAL WALL THK.: .049
HEAT LOT NO.: 752193
TEST FREQ. USED: NA
SERIAL NO.: Z-13329
I.D. NO.: 679
CAL. NO.: MR5524
QUALITY REL. NO.: NA
DATE MFG.: 2-1-95
Q.A. INSP.: [signature]
CUSTOMER: CONED NUCLEAR
RECORDED: NA
PROBE USED: NA
REVIEWED BY: [signature]

NOTE:

UNL. OTHERWISE SPECIFIED DIM ARE IN INCHES TOLERANCES	DRAWN	DATE
DECIMAL FRACT. ± 1/16	D. MATELICH	08/24/94
.XXXX ±.003	CHECK	
.XXX ±.015	B. JONES	08/30/94
.XX ±.050	DESIGN	
±.003	APVD. QA	
ANGULAR ±3°	U. ATKINS	08/31/94
FINISH		

ZETEC INC

TITLE: DUAL GUIDE TUBE STD. W/ MISC. DEFECTS

SIMILAR	DWG NO
	2-415-1015
SCALE NTS	USED ON 2-415-0004 / SH 1 OF 2

1448 S. R. 333
Russellville, AR 72802

FAX: 501-858-4685

ARKANSAS NUCLEAR ONE
ENTERGY OPERATIONS

Fax

To: Tom Alexion From: John Dosa

Fax: Pages: 41

Phone: Date: 6/13/00

Re: CC:

☐ Urgent ☐ For Review ☐ Please Comment ☐ Please Reply ☐ Please Recycle

• Comments:
draft RAI response

Additional Information in Support of Risk-informed License Change

1. **Provide a description of the plant changes required to support the new depressurization procedure.**

The Emergency Core Cooling System (ECCS) vent valves are used to depressurize the Reactor Coolant System (RCS) in the event that the RCS heat sink is lost. This would occur during a loss of all feedwater to the steam generators. Under these conditions, the RCS would continue to heat up and increase pressure until the pressurizer safeties lifted. The RCS pressure would be greater than the shutoff head for the Safety Injection System pumps and no makeup would be available to replenish the water going out the safeties. Eventually the core would boil dry.

The ECCS vent valves are used to reduce the RCS pressure below the shutoff head of the Safety Injection pumps. With the RCS depressurized, water from the Safety Injection Pumps can then enter the RCS to provide core cooling. The water heated by the core will exit out the ECCS vent valve providing once through cooling for the core.

The ECCS vent valves consist of 2CV-4740-2 and 2CV-4698-1. Both valves are

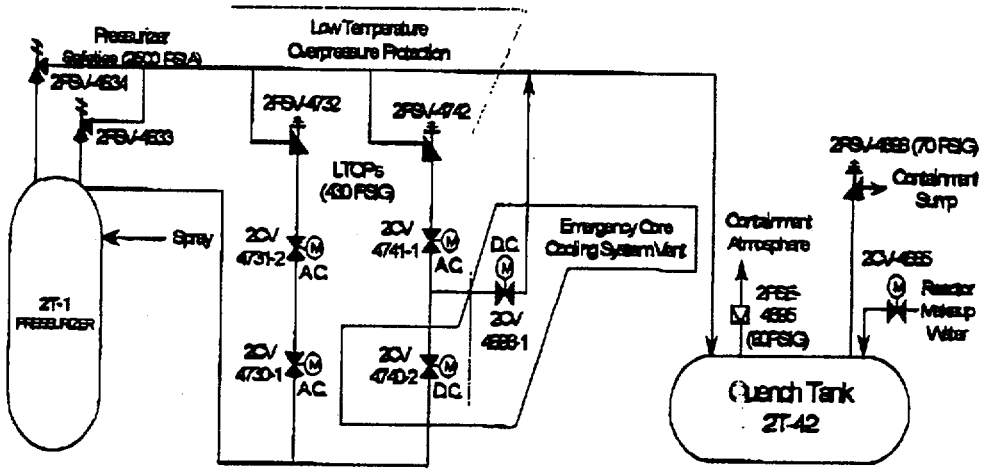

controlled from 2C-09 and are powered from opposite train 125 volt vital DC, making them available during a Station Blackout. The cabinets with breakers for these valves are both located in the 2B53 room (room 2091).

When actuated, the ECCS vent path provides a 2.624 inch diameter vent path to the quench tank.

During accident scenarios with a loss of one emergency train (both AC and DC), the RCS cannot be depressurized using either ECCS vent or LTOP valves. The modification provides for the installation of equipment to facilitate temporary power to the ECCS vent valves.

The modification provides a simple means for both ECCS vent valves to be energized from the opposite DC bus using a temporary connection to permanently mounted twist-lock plugs. The permanently mounted twist lock plugs will be connected to the load sides of 2D26 breaker 2D26-A2 and 2D27 breaker 2D27-A2.

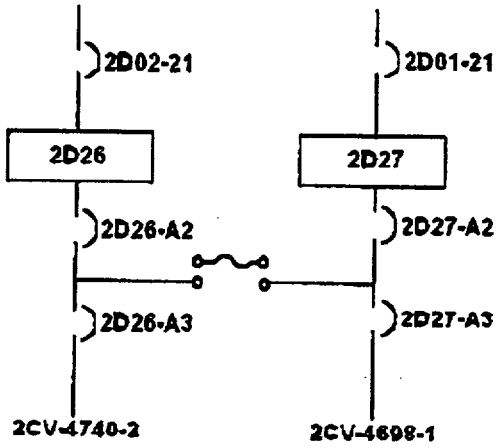

When loss of a DC bus occurs, the procedures direct the control room to dispatch the Emergency DC Crossconnect Watch to the 2B53 room to STANDBY for further instruction. When the need to depressurize the RCS is identified, procedure guide the control room operator to open the ECCS vent valve on the still energized bus. The Crossconnect Watch then opens the DC bus supply breaker to the de-energized MCC as directed by the control room operator (2D26 or 2D27). Next, the Crossconnect Watch will open the upstream feeder breakers to both ECCS vent valves. The Crossconnect Watch will then connect the extension cable. Once the cable connectors are locked in place, the feeder breaker to the ECCS vent valve on the energized bus is closed sending DC power to the opposite train vent valve. The second ECCS vent valve is then opened from the control room commencing depressurization of the RCS.

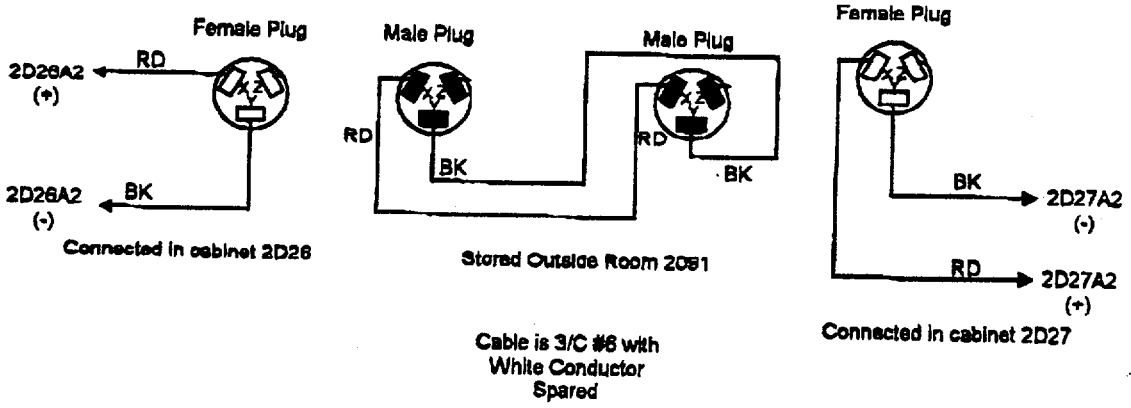

The connection cable will be stored in a cabinet located outside the 2B53 room and labeled as follows:

"FOR EMERGENCY USE ONLY"
"USE PER SAMG Developed Strategy (SDS-02)"

The cables connected to each breaker will be identified with the same label. These cables will be found in the raceway between the Row "A" and "B" breakers in each cabinet.

Additional information on the use of this modification is included in the response to Questions 3 through 6.

2. **Based on a description of each of the dominant scenarios that contribute to the high/dry portion of your core damage frequency, provide a description of the timing, and in particular timing of cues relative to plant state. Similarly, provide a description of the cues and what instrumentation is needed to provide those cues.**

The primary cues to the operator to identify when to depressurize the RCS are as follows:

- Level in either SG is less than 70" Wide Range. Monitoring of this parameter is initiated by Annunciator Corrective Action 2K04 F(G)1 "EFAS A(B) S/G ACT" in which EFAS actuates at 23% Narrow Range which is around 300" Wide Range.
- No Main Feedwater (MFW) as alarmed on Annunciator Corrective Action Windows 2K03 A8/11 – "FEED PUMP TRIP"
- Emergency Feedwater (EFW) as alarmed on Annunciator Corrective Action Windows 2K05-A9 "2P-7A TURB OVERSPEED TRIP" and 2K07-A9 '2P-7B FAILURE ON EFAS"

- No Auxiliary Feedwater (AFW) available as alarmed on Annunciator Corrective Action Window 2K03-J10 "2P75 TRIP"
- At least five (5) Core Exit Thermocouples (CETs) are reading above 800°F. Monitoring of this parameter is initiated by Annunciator Corrective Action 2K01 A10/11 "CONT CENTER 2D01(2) UNDERVOLT" OR 2K06 D8 "CET TEMP HI" (driven from 2TI-4793)

All cues are alarmed in the Control Room directly or indirectly

Estimates for the time of CET high temperature cue, the mean hot leg failure, and the mean SG tube failure after time of core uncovery were calculated by MAAP and PROBFAIL. These estimates are provided in the table, below.

Accident Scenario	Time After Core Uncovery (sec)		
	Hottest CETs ≥ 800°F	Median Hot Leg Failure	Mean SG Tube Failure
High/Dry/Low: both SGs depressurized (*base*)	263	3163	2902
High/Dry/High: both SGs pressurized (*pbase*)	219	3227	3233
Medium/Dry/Low: both SGs depressurized (*midbase*)	312	3622	3989
High/Dry/Medium: both SGs at medium pressure (*base3*)	245	3170	3201
High/Dry/High: both SGs pressurized with one RCP loop seal cleared (*pclr*)	243	5124	6034
High/Dry/High, Low: one SG pressurized and other depressurized, RCP loop seal cleared in the pressurized SG loop (*clru*)	231	4825	5238
High/Dry/High, Low: one SG pressurized and other depressurized, RCP loop seal cleared in the depressurized SG loop (*clr*)	236	4598	3290

A list of the instrumentation associated with each of the RCS depressurization cues follows.

(a) SG level cue: 2LIS 1079 and 2LIS-1179 (SG WR level),
(b) Main Feedwater (MFW), Emergency Feedwater (EFW), Auxiliary Feedwater (AFW) (alarms listed previously)
(c) CETS, Safety Parameter Display System (SPDS), Reactor Vessel Level Monitoring System (RVLMS), 2D01/02 undervoltage (u/v).

Entry conditions warranting RCS depressurization are:

(a) loss of all feedwater,
(b) level on either SG < 70" WR, and
(c) five or more CETS > 800°F

Two scenarios and their respective response follow:

(a) If undervoltage (u/v) relays on either DC bus 2D01 or 2D02 indicate an undervoltage condition, annunciator 2K01 will activate and ACA 2203.012A (2K01 annunciator corrective action) will direct the dedicated cross-tie operator (DXO) to proceed to 2B53 room access to obtain SDS-02 and then proceed to corridor 340 to prepare to open the ECCS vent valves by either powering 2CV-4698-1 from vital bus 2D26 or 2CV-4740-2 from vital bus 2D27. In addition, operators are instructed to monitor steam generator feed to identify whether a sustained loss of all feedwater has occurred, to monitor steam generator level to determine if SG is less than 70" WR, and to monitor the CETS to determine if the five highest CET indications are above 800°F. If all of these conditions are satisfied, then the ECCS vent valves will be opened.

(b) If either of two core exit thermocouples (CETS) indicate a temperature greater than variable alarm setpoint (2TI-4793), i.e., greater than 700°F, annunciator 2K07 will activate Window D-8 and ACA 2203.012G (2K07 annunciator corrective action) will direct operator action. Specifically, operators are instructed to monitor steam generator feed to identify whether a sustained loss of all feedwater has occurred, to monitor steam generator level to determine if SG is less than 70" WR, and to monitor the CETS to determine if the five highest CET indications are above 800°F. If all of these conditions are satisfied, then the ECCS vent valves will be opened. An Alert Emergency Class is declared using Emergency Action Level 9.2 (which mans the Emergency Response Organization) and the operator is directed to implement Functional Recovery EOP.

3. **Provide a copy of the procedures leading to and including the depressurization action, indicating the entry conditions.**

The associated portions of draft procedures 2203.012A, 2203.012G and SDS-02 are attached.

4. **Provide a discussion of the training on the new depressurization procedure.**

Attached are drafts of the Emergency DC Crossconnect Watch Study Guide and qual card used to train personnel on performing SDS-02.

5. **Provide a description of the actions necessary to perform the task, including an identification of who performs the actions, and where.**

The associated portions of draft procedures SDS-02, 1015.001, 1015.016 and 2202.006 are attached.

6. **Provide a rough estimate of the time required to perform the task.**

The tasks discussed in SDS-02 can be performed in less than 15 minutes. An actual walk down of these actions was completed in less than 10 minutes. With both 2D01 and 2D02 available, the ECCS vent valves can be opened in two minutes.

7. **Provide an estimate of the interval of time required after occurrence of the depressurization procedure initiation cues in order to achieve a probability of 0.25 or less that the human actions needed for depressurization are not yet completed.**

The time interval available for successful initiation of RCS depressurization following the last cue calling for depressurization which results in a failure probability of 0.25 or less is estimated to be about 23 minutes. This estimate is based on the use of Human Reliability Analysis quantification methods documented in the ANO-2 Individual Plant Examination and in updates to this risk analysis. It assumes that the time interval between when the highest five CETs read 800°F and the mean time for a steam generator tube failure prior to hot leg failure is about 43 minutes. This time interval is based on PROBFAIL calculations.

8. Provide the correlation for the Larson-Miller creep damage parameter used for the stainless steel surge line in your thermal-hydraulic analyses with the Modular Accident Analysis Program (MAAP) computer code.

The majority of the ANO-2 surge line is composed of Stainless Steel SA-351 Gr. CF8M. However, the surge line nozzle, which connects the surge line with the hot leg, is composed of carbon steel SA-105 Gr 2.

Entergy does not have a correlation for the Larson-Miller creep damage parameter for SA-351 Gr CF8M since the surge line was not modeled as a contributor to RCS failure in the ANO-2 PROBFAIL calculations. Rather, the ANO-2 Steam Generator Tube Rupture (SGTR) risk analysis conservatively assumed that the hot leg was the only RCS piping subject to creep failure as a means of reducing RCS pressure prior to SG tube creep.

Since the hottest region of the surge line is expected to be in the vicinity of its nozzle, since the nozzle base metal is SA-105 Gr. 2 (carbon steel), and since the nozzle wall thickness near its safe end is about the same as that as the rest of the surge line, the surge line nozzle is expected to be the point of its creep failure.

The Larson-Miller Parameter (LMP) for carbon steel was previously provided. If desired, the LMP for stainless steel 304 can also be provided.

9. **Provide the fraction of tubes currently plugged in each steam generator. If sleeves are currently installed, include their effect on net flow rate as its equivalent in number of plugged tubes.**

After completion of 2P99, the repairs to the ANO-2 SGs are as follows:

		SGA	SGB
REPAIRED TO DATE PLUGS		1487	1460
REPAIRED TO DATE SLEEVES			
	B&W	285	48
	ABB-CE	376	146
	TOTAL	661	194
EQUIVALENT PLUGGED *		1511.379	1465.985
EQUIVALENT PERCENT PLUGGED		17.97%	17.430%
AVERAGE		**17.70%**	

* Based on 18 sleeves per plug for B&W and 44 sleeves per plug for ABB-CE

10. **Provide any other parameter changes from the conditions specified in your previously submitted document titled Calc No. 99-E-0019-02, "ANO-2 MAAP and PROBFAIL Calculations."**

No changes to the subject calculation have been made. The revised SGTR risk analysis presented at ANO's June 8, 2000, meeting with the NRC Staff continues to use the results of the MAAP calculations as input. However, the revised SGTR risk analysis no longer uses the results of the PROBFAIL calculations in 99-E-0019-02. Instead, the PROBFAIL analysis has been revised to utilize defect m and m_p distributions rather than SG "fragility distributions" and these new PROBFAIL calculations are documented in the revised SGTR risk calculation. The m and m_p distributions were calculated for and applied at the same burnup conditions as were the SG fragility distributions, i.e., at the Beginning of Period (BOP), just after 2P99, at Middle of Period on 6/15/00, assuming no SG inspection/repair (MOP-NR), and at End of Period on 9/15/00, assuming no SG inspection/repair (EOP-NR). Ninety-three (93) defects were assumed to be present in each SG after each inspection and repair.

11. Using the most recently provided estimates of flaw growth rates and the probability of detection as a function of flaw size during your most recent inspection (2P99), provide the probability distributions for the stress magnification factors for partial through-wall cracks (m_p) and through-wall cracks (m) for each of these 3 points in time during your current operating interval: 1) start-up the fall of 1999, 2) June 15, 2000 without inspection, and 3) September 15, 2000, without inspection.

The following four tables of data are the Mp and/or M values for the following predicted conditions:

- (TABLE 1) Mp for beginning of period following 2P99 (Case 1')
- (TABLE 2) Mp for conditions at the middle of period 2P00 (Case 2') which is June 15, 2000
- (TABLE 3) Mp for conditions at the end of period 2R14 (Case 3') which is September 15, 2000
- (TABLE 4) M for all three conditions. There is not a separate M table for each condition since M is based on lengths and the lengths are kept constant through out the intervals

This data was generated using the most recent model that was submitted based on use of the following:

- Bi-variant probability of detection (POD) using peak depth and bobbin volts
- Five independent POD curves used probabilistically
- Probabilistic growth based on ANO specific data
- Sizing uncertainty of 12.7%
- Depth based on profiled data

Also attached are the probability distribution graphs for the data listed above.

TABLE 1
Mp Values for Case 1'
Beginning of Cycle Conditions

MP	CDF		MP	CDF		MP	CDF
1.1	0.06777		4.1	0.99920		7.1	0.99985
1.2	0.47099		4.2	0.99932		7.2	0.99985
1.3	0.71055		4.3	0.99935		7.3	0.99985
1.4	0.82756		4.4	0.99942		7.4	0.99985
1.5	0.89105		4.5	0.99948		7.5	0.99986
1.6	0.92681		4.6	0.99953		7.6	0.99986
1.7	0.94922		4.7	0.99954		7.7	0.99987
1.8	0.96363		4.8	0.99959		7.8	0.99988
1.9	0.97313		4.9	0.99961		7.9	0.99988
2.0	0.97940		5.0	0.99964		8.0	0.99988
2.1	0.98441		5.1	0.99968		8.1	0.99988
2.2	0.98805		5.2	0.99970		8.2	0.99988
2.3	0.99067		5.3	0.99973		8.3	0.99988
2.4	0.99240		5.4	0.99973		8.4	0.99988
2.5	0.99382		5.5	0.99973		8.5	0.99988
2.6	0.99489		5.6	0.99974		8.6	0.99988
2.7	0.99566		5.7	0.99975		8.7	0.99988
2.8	0.99634		5.8	0.99976		8.8	0.99988
2.9	0.99690		5.9	0.99976		8.9	0.99988
3.0	0.99727		6.0	0.99976		9.0	0.99988
3.1	0.99759		6.1	0.99977		9.1	0.99991
3.2	0.99791		6.2	0.99980		9.2	0.99991
3.3	0.99815		6.3	0.99980		9.3	0.99991
3.4	0.99835		6.4	0.99982		9.4	0.99991
3.5	0.99851		6.5	0.99983		9.5	0.99991
3.6	0.99866		6.6	0.99983		9.6	0.99991
3.7	0.99881		6.7	0.99983		9.7	0.99991
3.8	0.99889		6.8	0.99983		9.8	0.99991
3.9	0.99902		6.9	0.99984		9.9	0.99991
4.0	0.99914		7.0	0.99985		10.0	0.99991

TABLE 2
Mp Values for Case 2'
Conditions at 2P00

MP	CDF		MP	CDF		MP	CDF
1.1	0.03814		4.1	0.99820		7.1	0.99960
1.2	0.37440		4.2	0.99830		7.2	0.99960
1.3	0.64070		4.3	0.99840		7.3	0.99960
1.4	0.78230		4.4	0.99860		7.4	0.99960
1.5	0.86100		4.5	0.99860		7.5	0.99960
1.6	0.90720		4.6	0.99880		7.6	0.99960
1.7	0.93490		4.7	0.99880		7.7	0.99960
1.8	0.95270		4.8	0.99890		7.8	0.99960
1.9	0.96470		4.9	0.99900		7.9	0.99960
2.0	0.97260		5.0	0.99910		8.0	0.99970
2.1	0.97850		5.1	0.99910		8.1	0.99970
2.2	0.98270		5.2	0.99920		8.2	0.99970
2.3	0.98590		5.3	0.99920		8.3	0.99970
2.4	0.98840		5.4	0.99920		8.4	0.99970
2.5	0.99020		5.5	0.99930		8.5	0.99970
2.6	0.99180		5.6	0.99930		8.6	0.99970
2.7	0.99310		5.7	0.99930		8.7	0.99970
2.8	0.99390		5.8	0.99940		8.8	0.99970
2.9	0.99470		5.9	0.99940		8.9	0.99970
3.0	0.99510		6.0	0.99940		9.0	0.99970
3.1	0.99580		6.1	0.99940		9.1	0.99970
3.2	0.99620		6.2	0.99940		9.2	0.99980
3.3	0.99650		6.3	0.99950		9.3	0.99980
3.4	0.99680		6.4	0.99950		9.4	0.99980
3.5	0.99720		6.5	0.99950		9.5	0.99980
3.6	0.99750		6.6	0.99950		9.6	0.99980
3.7	0.99770		6.7	0.99950		9.7	0.99980
3.8	0.99780		6.8	0.99950		9.8	0.99980
3.9	0.99790		6.9	0.99950		9.9	0.99980
4.0	0.99810		7.0	0.99960		10.0	0.99980

TABLE 3
Mp Values for Case 3'
Conditions at 2R14

MP	CDF		MP	CDF		MP	CDF
1.1	0.03414		4.1	0.99754		7.1	0.99917
1.2	0.33176		4.2	0.99768		7.2	0.99917
1.3	0.60255		4.3	0.99783		7.3	0.99917
1.4	0.75443		4.4	0.99798		7.4	0.99920
1.5	0.83988		4.5	0.99808		7.5	0.99921
1.6	0.89146		4.6	0.99815		7.6	0.99921
1.7	0.92253		4.7	0.99820		7.7	0.99924
1.8	0.94238		4.8	0.99830		7.8	0.99925
1.9	0.95614		4.9	0.99838		7.9	0.99927
2.0	0.96561		5.0	0.99849		8.0	0.99927
2.1	0.97261		5.1	0.99850		8.1	0.99929
2.2	0.97792		5.2	0.99856		8.2	0.99930
2.3	0.98169		5.3	0.99861		8.3	0.99931
2.4	0.98432		5.4	0.99863		8.4	0.99931
2.5	0.98676		5.5	0.99868		8.5	0.99932
2.6	0.98882		5.6	0.99874		8.6	0.99933
2.7	0.99033		5.7	0.99875		8.7	0.99933
2.8	0.99148		5.8	0.99880		8.8	0.99935
2.9	0.99257		5.9	0.99882		8.9	0.99936
3.0	0.99351		6.0	0.99885		9.0	0.99936
3.1	0.99419		6.1	0.99888		9.1	0.99936
3.2	0.99470		6.2	0.99892		9.2	0.99937
3.3	0.99518		6.3	0.99895		9.3	0.99937
3.4	0.99566		6.4	0.99901		9.4	0.99938
3.5	0.99602		6.5	0.99904		9.5	0.99940
3.6	0.99643		6.6	0.99909		9.6	0.99940
3.7	0.99679		6.7	0.99911		9.7	0.99941
3.8	0.99699		6.8	0.99914		9.8	0.99941
3.9	0.99720		6.9	0.99916		9.9	0.99941
4.0	0.99743		7.0	0.99916		10.0	0.99941

TABLE 4
M Values for All Operating Intervals

M	CDF		M	CDF		M	CDF
1.0	0.00002		4.1	0.97530		7.2	1.00000
1.1	0.00002		4.2	0.97530		7.3	1.00000
1.2	0.00002		4.3	0.98160		7.4	1.00000
1.3	0.00486		4.4	0.98160		7.5	1.00000
1.4	0.01795		4.5	0.98568		7.6	1.00000
1.5	0.02815		4.6	0.98568		7.7	1.00000
1.6	0.07344		4.7	0.98568		7.8	1.00000
1.7	0.12220		4.8	0.98568		7.9	1.00000
1.8	0.16248		4.9	0.98568		8.0	1.00000
1.9	0.22495		5.0	0.98568		8.1	1.00000
2.0	0.29096		5.1	0.98568		8.2	1.00000
2.1	0.35963		5.2	0.98568		8.3	1.00000
2.2	0.43818		5.3	0.98568		8.4	1.00000
2.3	0.46410		5.4	0.99795		8.5	1.00000
2.4	0.48550		5.5	0.99795		8.6	1.00000
2.5	0.52196		5.6	0.99795		8.7	1.00000
2.6	0.56015		5.7	0.99795		8.8	1.00000
2.7	0.65145		5.8	0.99795		8.9	1.00000
2.8	0.68932		5.9	0.99979		9.0	1.00000
2.9	0.73285		6.0	1.00000		9.1	1.00000
3.0	0.74418		6.1	1.00000		9.2	1.00000
3.1	0.75898		6.2	1.00000		9.3	1.00000
3.2	0.80621		6.3	1.00000		9.4	1.00000
3.3	0.83554		6.4	1.00000		9.5	1.00000
3.4	0.87185		6.5	1.00000		9.6	1.00000
3.5	0.89144		6.6	1.00000		9.7	1.00000
3.6	0.89308		6.7	1.00000		9.8	1.00000
3.7	0.91485		6.8	1.00000		9.9	1.00000
3.8	0.93504		6.9	1.00000		10.0	1.00000
3.9	0.95144		7.0	1.00000			
4.0	0.97302		7.1	1.00000			

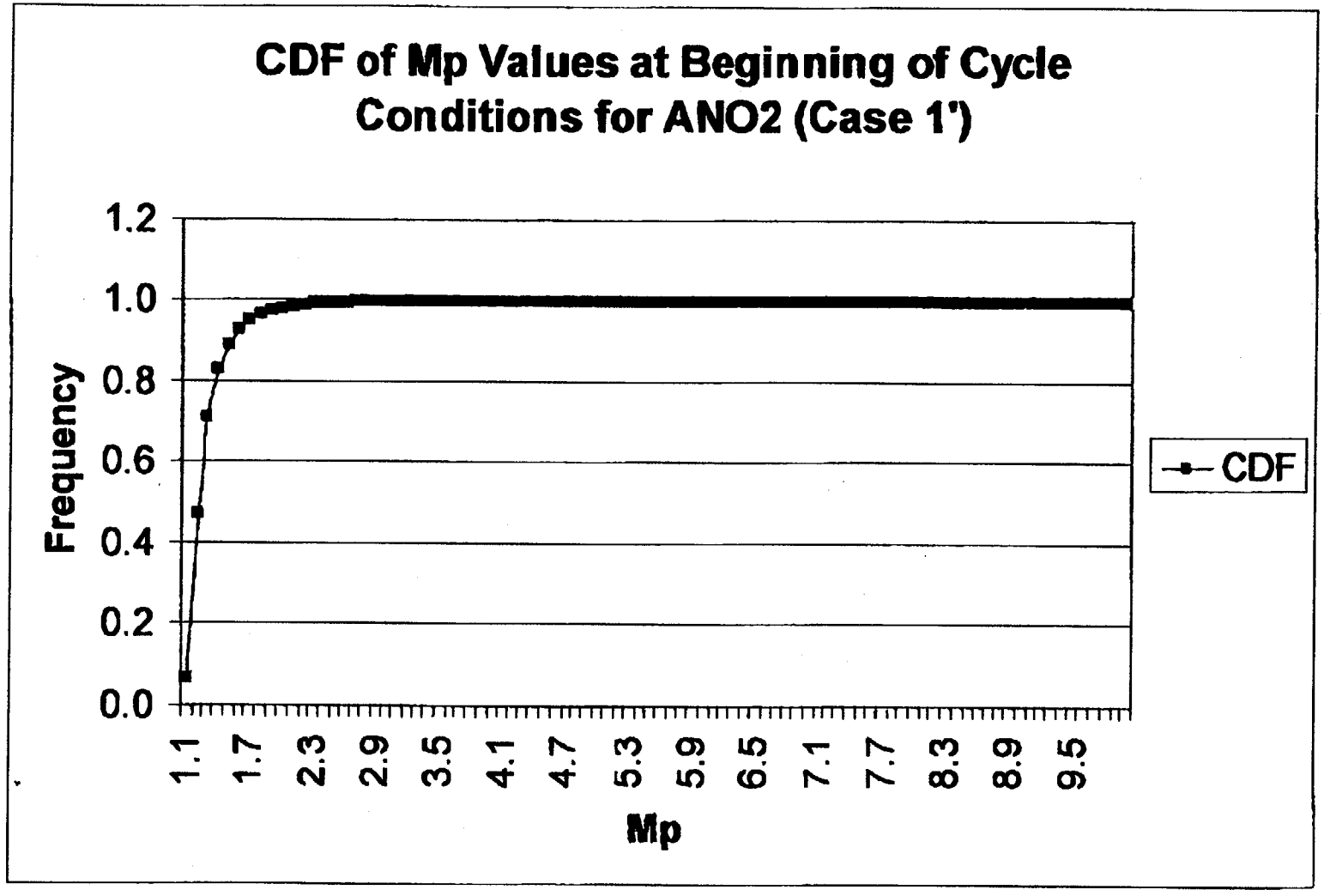

JUN-13-00 16:39 From:ANO GSB 1 T-099 P.15/41 Job-727

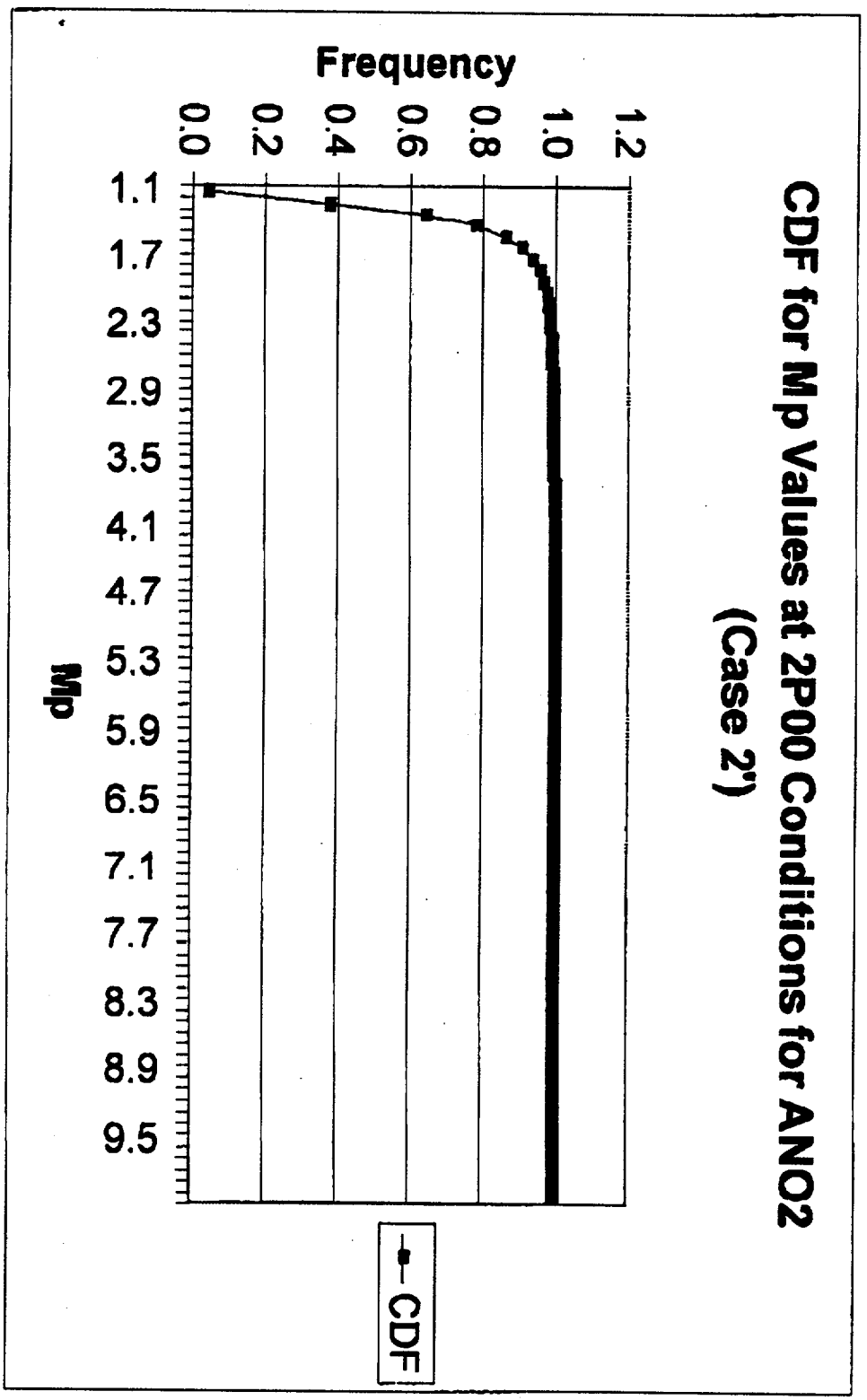
CDF for Mp Values at 2P00 Conditions for ANO2
(Case 2')
Frequency
0.0
0.2
0.4
0.6
0.8
1.0
1.2
Mp
1.1
1.7
2.3
2.9
3.5
4.1
4.7
5.3
5.9
6.5
7.1
7.7
8.3
8.9
9.5
CDF

JUN-13-00 16:39 From:ANO GSB 1

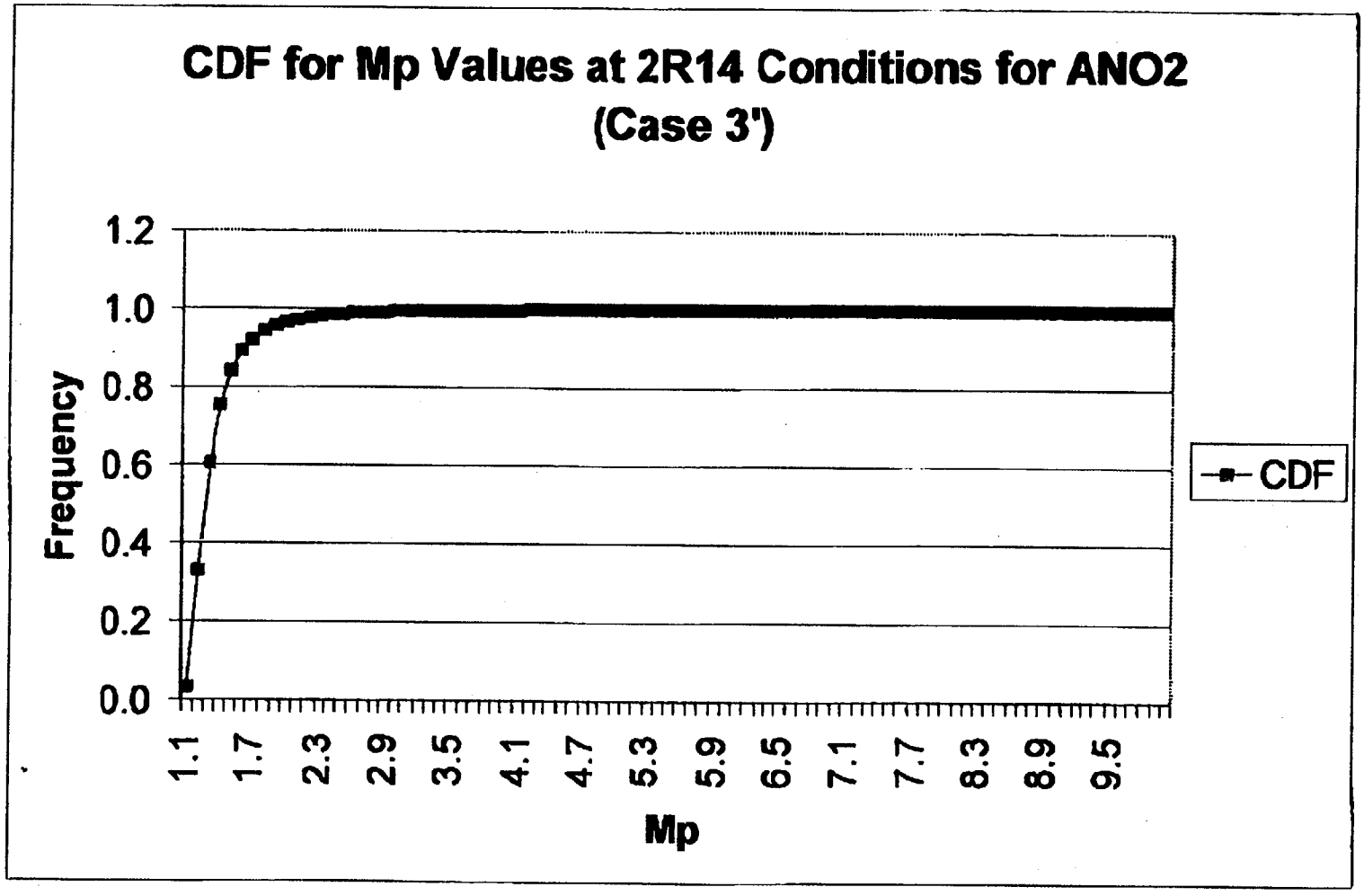

T-099 P.17/41 Job-727

JUN-13-00 16:39 From:ANO GSB 1

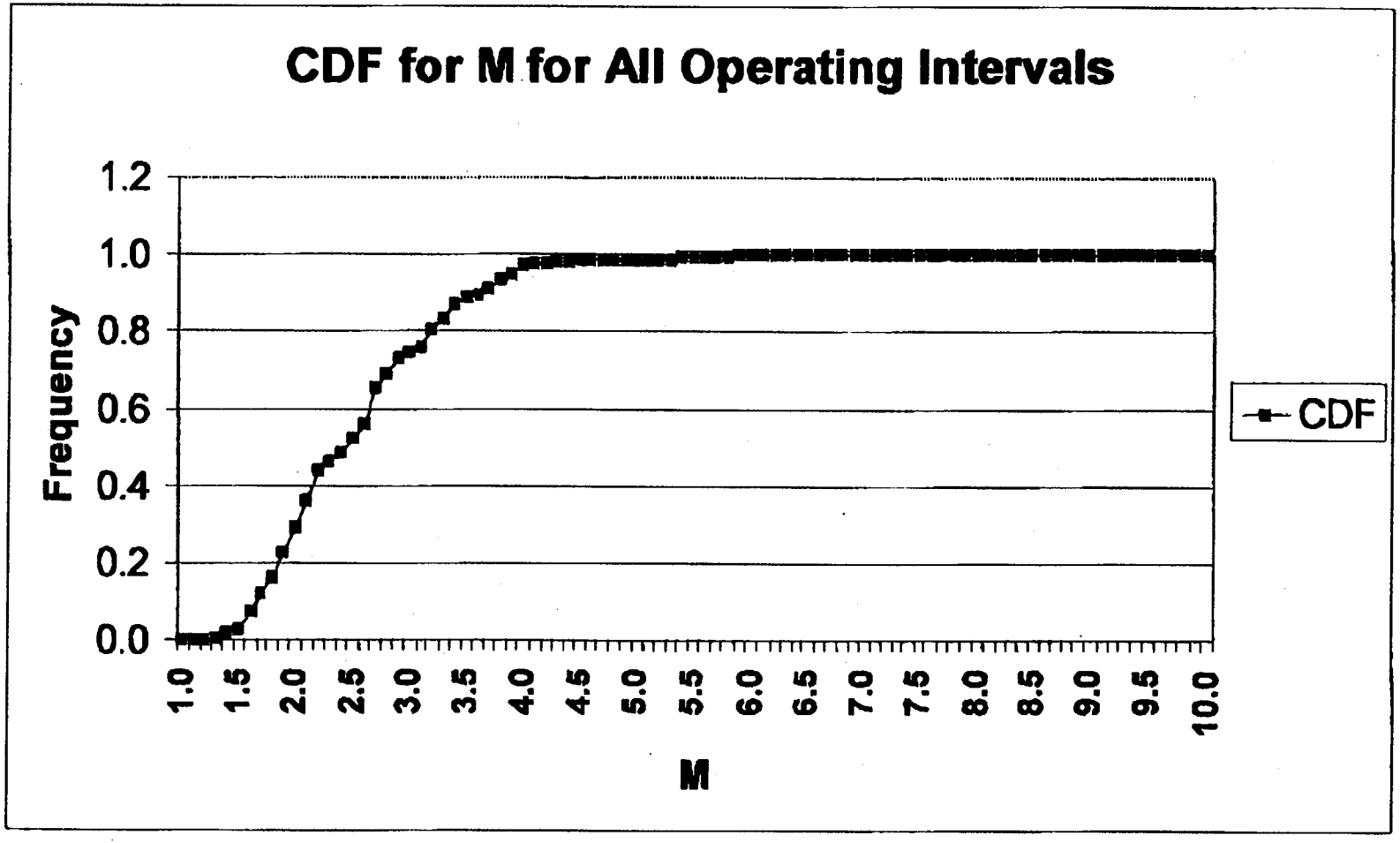

T-099 P.18/41 Job-727

12. **During the meeting between Entergy and NRC on June 8, 2000, Entergy staff stated that an improved eddy current testing calibration standard had been used for inspections conducted during the 2P99 outage. They also indicated that they had performed a study in which the eddy current testing data taken with the new and improved calibration standard was compared to data taken with the previously used calibration standard for 30 some indications. Please provide the referenced eddy current data for review by the staff. Also, provide bobbin probe eddy current data for a random sample of 12 tubes covering the full length of the tubes and the rotating pancake coil eddy current data for a random sample of 12 tube/tube support plate intersections. These latter data should be those taken with the calibration standard of record, i.e., the new and improved standard, for the examinations.**

During the latter part of the most recent mid-cycle outage (2P99) it was noticed that most distorted support indications (DSI) were being called at a consistent higher voltage than in the previous outages. Many possibilities were discussed and one identified change in equipment setup from previous outages was the use of toolhead calibration standards that had been borrowed from another plant. These calibration standards were used to improve inspection efficiency due to changes in the robotic manipulators used during the mid-cycle outage.

To determine the impact of the calibration standards, a test was conducted. Due to the inspection/plugging schedule of the two steam generators it was determined that a complete acquisition station with an "outage" eddy current bobbin probe was still available on the "A Cold Leg" platform. A "clean" calibration standard from the lot that had been used the previous two outages was taken to the "A Cold Leg" platform and a number of calibration standard "pulls" were accomplished using bobbin probe S/N 296917. These calibration standard "pulls" were then setup according to the current Examination Technique Specification Sheet #1 (ETSS #1) and used to compare the voltages using the 2P99 calibration standard setup. Note: voltage normalization was set at 4.00 volts on the 4 – 20% holes on each calibration standard.

Eddy current data for twelve tubes was collected and compared using the two calibration setups from the "A" SG. Data for these twelve tubes was collected previously with the same bobbin probe, s/n 296917, as the ANO calibration standard. An increased reported voltage on all DSIs were found when using the 2P99 standard versus the ANO calibration standard setup.

Approximately thirty DSIs were analyzed using both calibration standard setups and again the reported voltage was consistently greater when using the 2P99 setup compared to the ANO calibration standard setup.

ANO personnel have compared an additional forty two DSIs from the "B" SG and all of the reported voltages are greater when using the 2P99 standards compared to the ANO standard.

The following data is being provided to the NRC on an optical disk:

Side A

1. ANO calstnd/SG10CCAL00052 - the previous cal standard from 2R13 and a setup that meets ANO Examination Technique Specification Sheet #1 (ETSS # 1).
2. Raw - 32 tubes of 2P99 confirmed bobbin DSIs from the "B" SG.
3. Resolution - Setups for 2P99 using 2P99S cal standards.

Side B

1. 12 random confirmed bobbin DSIs and 12 random RPC Single Axial Indications (SAI) from the "B" SG.

In addition, drawings of the calibration standards and ANO-2 ETSS#1 have been provided to support the data on the optical disk.

10.4.1 ATTACHMENT I - ETSS #1 Bobbin Examination

Examination Technique Specification Sheet

ETSS # 1 - BOBBIN PROBE		Page: 1 of 4

Site: Entergy Operation Inc. Arkansas Nuclear One Unit #2

Examination Scope

Applicability: Standard ASME Code Examination. Use for detection of IGA/ODSCC at non-dented drilled and eggcrate support structures, in freespan tubing and within sludge pile region. This technique includes the detection and sizing of wear at diagonal and vertical straps using differential 400/100-amplitude mix.

Instrument	Tubing
Manufacturer/Model: Zetec MIZ-30A or Equiv.	**Material Type: Inconel 600**
Data Recording Equipment	**OD/Wall (inch): 0.750" OD X 0.048" Wall**
Manuf./Media: HP HD 2.6 Gb Optical or Equiv.	Calibration Standard
Software	**Type: ASME with Fan Bar Wear and EDM**
Manufacturer: Zetec	Analog Signal Path
Version/Revision: EN 98, 1.30	**Probe Extension Manuf.: Zetec**
Examination Procedure	**Extension Type & Length: Universal 945-1760, 75 ft.**
Number/Revision: HES-28 Rev. 11	**Slip Ring Model Number: 508-2052**

Scan Parameters

Scan Direction: Pull

Digitization Rate, Samples Per Inch (minimum):	Axial Direction	≥30	Circ. Direction	N/A

Probe Speed	Sample Rate	RPM Set	RPM Min	RPM Max
≤48 IPS	1777	N/A	N/A	N/A
≤24 IPS	1100	N/A	N/A	N/A

Probe

Description (Model/Diameter/Coil Dimensions)	Manufacturer/Part Number	Length
A-600-M/ULC	Zetec 700-1192-061	110 ft.
A-540-SF/RM / A-560 SF/RM / A-580-SF/RM	Zetec 754-0402-001/D#2121-10-B/700-0402-051/D#2121-9-B	110 ft.
A-600-M/ULC (500 nose)	Zetec D# 2120-5-G	110 ft.
600-M/ULC Replaceable Foot Bobbin Probe	760-2112-001	110 ft.

Data Acquisition

Calibration Differential Channels

Channel & Frequency	Ch. 1 & 3 400 kHz	Ch. 5 & 7 200 kHz	Ch. 9 & 12 100 kHz	Ch. 15 & 17 20 kHz
Phase Rotation	100% TWH 40 degrees	100% TWH 40 degrees	100% TWH 40 degrees	Tube Support Ring 90 Degrees
Span Setting	100% TWH 6 divisions	100% TWH 6 divisions	100% TWH 6 divisions	Tube Support Ring 5 divisions

Calibration Absolute Channels

Channel & Frequency	Ch. 2 & 4 400 kHz	Ch. 6 & 8 200 kHz	Ch. 10 & 13 100 kHz	Ch. 16 & 18 20 kHz	Ch. 11 & 14 100 kHz Encoder
Phase Rotation	Probe Motion Horiz. Flaws up first	Probe Motion Horiz. Flaws up first	Probe Motion Horiz. Flaws up first	Tube Support Ring 90 Degrees	Encoder Pulse @ 90 Degrees
Span Setting	60% TWH 5 divisions	60% TWH 5 divisions	60% TWH 2 divisions	Tube Support Ring 4 divisions	Encoder Pulse @ 4 divisions

ENTERGY	ARKANSAS NUCLEAR ONE ENGINEERING STANDARD ANO-2 STEAM GENERATOR EDDY CURRENT EXAMINATION GUIDELINES	No.: HES-28 Rev. No.: 11 SCN No.: 1 Page: 56

Examination Technique Specification Sheet

ETSS # 1 - BOBBIN PROBE **Page: 2 of 4**

Configuration Board Settings

trig: off / down	Configuration # :	Name: Bobbin	samples/sec: See Pg 1of 4	rec. media =
tester =	board # 1 / board # 2	board # 3 / board # 4	board # 5 / board # 6	board # 7 / boa
# of channels = 18	probe # 1 / probe # 1	probe # 2 / probe # 2	probe # 1 / probe # 1	probe # 1 / prot

	DRIVE A D B C	DRIVE A D B C	DRIVE A D B C	DRIVE A D B C	DRIVE A D B C	DRIVE A D B C	DRIVE A D B C	DRIVE A
Drive Polarity	N N	N	N N	N				
Group Number	1 1	1	2 2	1				
Coil Number	1 5	5	1 5	8				
FREQ #1 400 kHz — Time Slot # 1 — G: x 2 — 12.0 V	D A		D A					
FREQ #2 200 kHz — Time Slot # 2 — G: x 2 — 12.0 V	D A		D A					
FREQ #3 100 kHz — Time Slot # 3 — G: x 2 — 12.0 V	D A	D	D A	D				
FREQ #4 20 kHz — Time Slot # 4 — G: x 4 — 12.0 V	D A		D A					
FREQ #5 — Time Slot # 5								
FREQ #6 — Time Slot # 6								
FREQ #7 — Time Slot # 7								
FREQ #8 — Time Slot # 8								

END LOC CH : 1 1
THRESHOLD : off off
(P) GAIN : x6
ACTIVE PROBES : 2

DRIVE A : D = A1-A2, P = dr:A1 pu:A2,DP = dr ; D1&D2 pu : A1&A2
DRIVE B : D = B1-B2, A = A1-B2
P = dr : B1 pu:B2, DP = dr : C1&C2 pu : B1&B2
DRIVE C : D = C1-C2, A = D1-C2
DRIVE D : D = D1-D2

Special Instructions

1. **The A-600-M/ULC probe is the primary use probe for the bobbin examination. The A-580SF/RM and A-560SF/RM are used to test low row tubes.**
2. **The A-580-SFRM probe can be used in tubes reported as RRT with the .600" probe as directed by the FTI Level III and Entergy approval. If needed, a 0.560 SF/RM probe, or a 0.540 SF/RM can be used as directed by the FTI Level III and Entergy approval.**
3. Enter a message at the beginning of each calibration group indicating that the data is being acquired with either single or dual probes. If dual probes are being used state which calibration group is the primary probe and which is the secondary probe.
5. **When acquiring data with a single probe Coil 1 (differential) channels will be Ch1=400 kHz, Ch3=200 kHz, Ch5=100 kHz, Ch8=20kHz and the Coil 5 (absolute) channels will be Ch2=400 kHz, Ch4=200 kHz, Ch6=100 kHz, Ch9=20 kHz.**
6. **Slower speeds (24 IPS) are recommended in the smaller radius U-bend tubes (row 5 and below) due to probe snapping through the U-bend.**
7. **Three recordings of the calibration standard should be performed at the beginning and end of each calibration group.**
8. **As a minimum, a position verification and a message will be entered once per calibration group.**
9. **Tubes, which have been mis-encoded, should be corrected by entering a message to void that entry and re-examining the tube with the proper encode. This is required to maintain an accurate DSR database.**

ENTERGY	ARKANSAS NUCLEAR ONE ENGINEERING STANDARD ANO-2 STEAM GENERATOR EDDY CURRENT EXAMINATION GUIDELINES	No.: HES-28 Rev. No.: 11 SCN No.: 1 Page: 57

Examination Technique Specification Sheet

ETSS # 1 - BOBBIN PROBE **Page: 3 of 4**

Data Analysis

Calibration Differential Channels

Channel & Frequency	Ch 1 400 kHz	Ch 3 200 kHz	Ch 5 100 kHz	Ch 8 20 kHz
Phase Rotation	100% TWH @ 40 degrees	100% TWH @ 40 degrees	100% TWH @ 40 degrees	Tube Support Ring @ 90 Degrees
Span Setting Minimum	100% TWH @ 75% FSH	100% TWH @ 75% FSH	100% TWH @ 75% FSH	Tube Support Ring @ 50% FSH

Calibration Absolute Channels

Channel & Frequency	Ch 2 400 kHz	Ch 4 200 kHz	Ch 6 100 kHz	Ch 9 20 kHz
Phase Rotation	100% TWH @ 32 Degrees	100% TWH @ 32 Degrees	100% TWH @ 40 Degrees	Tube Support Ring @ 270 degrees
Span Setting Minimum	60% TWH @ 50% FSH	60% TWH @ 50% FSH	60% TWH @ 20% FSH	Tube Support Ring @ 40% FSH

Calibration Process and Other Channels

Channel & Frequency	P1 (Ch 1/5) 400/100 kHz Diff	P2 (Ch 1/3/5 turbo) 400/200/100 kHz Diff		Ch 7 100 kHz
Configure & Adjust Parameters	Suppress Support Ring	Save 100, 60, 20 Suppress TSP & TSH		N/A
Phase Rotation	Probe Motion Horiz. Flaws start down	Probe Motion Horiz. Flaws start down		Encoder Pulse @ 90 Degrees
Span Setting Minimum	100% TWH @ 75% FSH	100% TWH @ 50% FSH		Encoder Pulse @ 4 Divisions

Voltage Normalization

CH	Signal	Set	Normalize
1	4X20% FBH	4 Vp-p	All

Calibration Curves

Type	CH	Set Points
Phase	1, 3, 5, P1	100, 60, 20 FBH

Data Screening

Left Strip Chart	Right Strip Chart	Lissajous
P1	Ch 6	Ch P1

Reporting Requirements

Condition/Region	Report	Ch.	Comment
Absolute Drift	ADI	6	Vert-Max (Low Row U-bend)
Freespan	DFI	→	Use "Free Span Bobbin Coil Indication Flow Chart"
Eggcrates	DSI	P1	See Note 6
Tubesheet	DTI	P2	See Note 4
Dents	DNT	P1	All Dent Indications > 3 volts located anywhere.
Indication Not Reportable	INR		Indications detected are not reportable by guidelines
Indication Not Found	INF		Resolution is require to research and resolve per guidelines
Possible Loose Part	PLP	9	Any Indication of Secondary Side Foreign Parts, See Note 9
Sludge Pile	NQI	P1	In the Sludge Pile

Examination Technique Specification Sheet

ETSS # 1 - BOBBIN PROBE

Special Instructions

1. **Refer to Appendix I additional instructions regarding the data screening and evaluation of Bobbin Probe data. (The required extent to be analyzed for all bobbin examination is to be TEH-07H +1.0"; data acquired outside this extent does not require analysis.)**

2. **Zoom the strip chart to a maximum value of 8 to increase visibility of small amplitude indications.**

3. **All areas of the tubing should be examined with both P1 and Ch6 for indications and/ or drifts that may be indicative of cracking.**

4. **Review tubesheet data for indications of degradation, distortion and drifts indicative of axial or circumferential cracking. Indications may be confirmed by using Ch5, Ch6 or P2. Evaluation is typical in P1 or Ch1. Based upon experience at ANO-2, take care to examine the entire tubesheet entry signal at the setup span on Ch1 and Ch3 for distorted signals indicative of cracking. Also observe the response of P2. The requirement to screen the entire tubesheet entry signal is critically important in both the hot leg and cold leg. Distorted signals, which may be indicative of a flaw on the bobbin, shall be flagged for RPC examination by reporting as DTI in the % column. If the indication is not in the expansion transition, the indication should be evaluated and reported from P1.**

5. **In the presence of deposits at the top of the tubesheet, if the signal has the characteristics of a flaw on P1, report these indications as an "NQI" code and test with an RPC examination.**

6. **Evaluate each support on the P1 process channel. Eggcrates typically have three signals representing the two edges and the center of the eggcrate. Indications can be confirmed with Ch1, 3, or 5 when deposit influence is not present. Indications that are phased in the ID plane on P1 should confirm on Ch3 and/or Ch5. Indications may not always display an expected counter-clockwise rotation.**

7. **When using Auto Calibration features, make sure that you are using the file that matches the Standard being used.**

8. **Monitor the configuration widget for proper data sampling. Set the warning dialog to trigger at 30 axial samples.**

9. **Observe the stripchart and Lissajous presentations for indications occurring anywhere along the tube but especially on top of the tubesheet and supports. Possible loose parts shall be screened and reported as a Possible Loose Part (PLP) on 20 kHz absolute. This will signify the need for further characterization with a rotating probe technique.**

2P99

REVISIONS					
LTR	DATE	DESCRIPTION	APVD	CK	DR
E	8/24/94	ADDED WIDTH CALL-OUT LOC. A-B-E-F	[illegible]	[illegible]	K2

LOCATION	A	B	C	D	E	F	G	H	I	J	K
PHYSICALLY MEAS DEPTH	.0205	.0205	—	—	.0205	THRU	THRU	.0300	.0105	.0245	.0160
DEPTH IN % OF WALL	40%	40%	—	—	40%	100%	100%	58%	20%	48%	31%
DIA OF DEFECT .003											

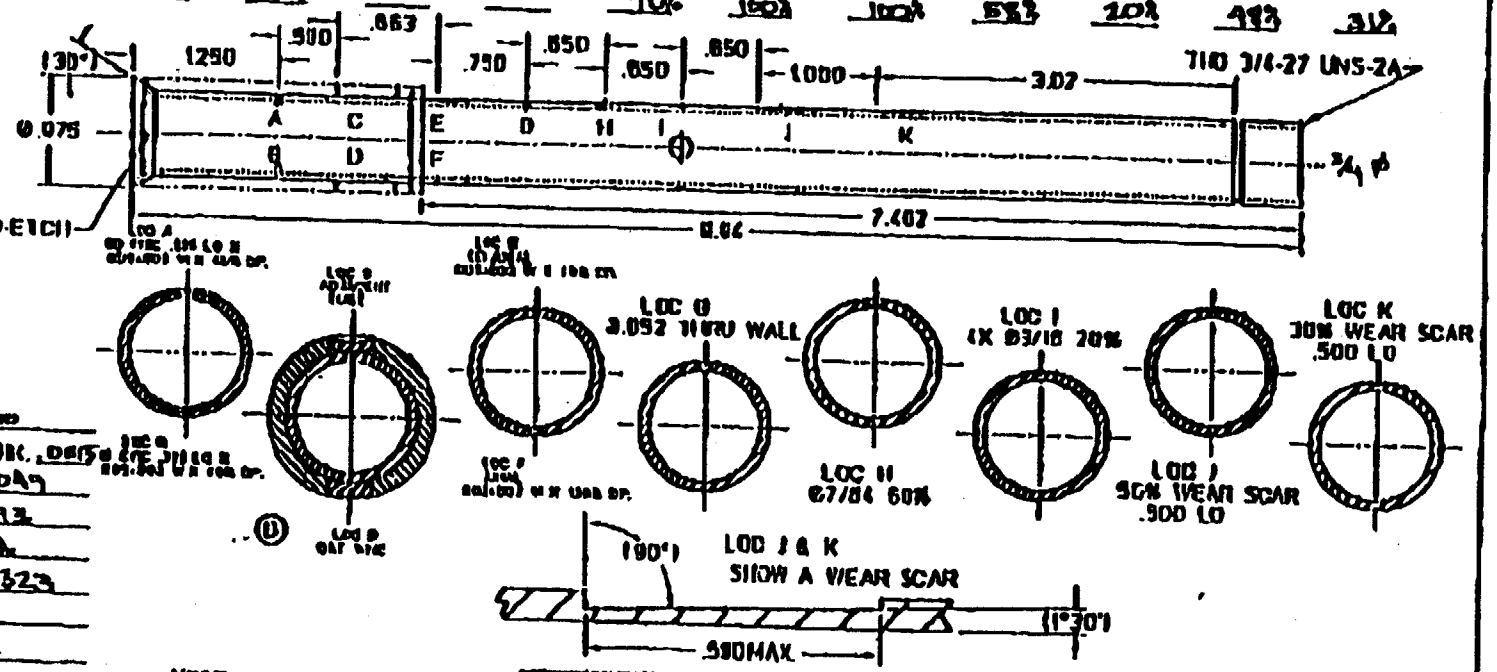

MATERIAL Inconel 600
AVERAGE MEAS WALL THK. .0815
NOMINAL WALL THK. .049
HEAT LOT NO. 752493
TEST FREQ USED NA
SERIAL NO Z-13323
P.O NO 679
REL. NO MR5524
QUALITY REL. NO. NA
DATE NFO 2-1-95
Q.A INSP. [illegible]
CUSTOMER Conan Nuclear
RECORDED NA
PROBE USED NA
REVIEWED BY [illegible]

NOTE:

UNL. OTHERWISE SPECIFIED
THIS ARE IN INCHES
TOLERANCES
DECIMAL FRACT. ± 1/16
.XXX ±.005
.XX ±.015
.X ±.030
± ±.015
ANGULAR ±3°
FINISH

		DATE
DRAWN	G. MATELICH	08/24/94
CHECK	B. JONES	08/30/94
DESIGN		
APVD. DA	B. ATHIVS	08/31/94

ZETEC INC.

TITLE DUAL GUIDE TUBE STD. W/ MISC. DEFECTS

SIMILAR

DWG NO 2-415-1015

SCALE NTS

USED ON 2-415-0004

SHT 1 OF 2

2R13

REVISIONS					
LTR	DATE	DESCRIPTION	APVD	CK	DR

[1] Ø052 IN STD. ≤ Ø75
Ø067 IN STD. > Ø75

LOCATION	A	B	C	D	E	F	G	H	I	J	K
PHYSICALLY MEAS. DEPTH	.0135	.0245	.0100	.0275	THRU	.0095	.0295	THRU	.0060		
DEPTH IN % OF WALL	28%	51%	21%	57%	100%	20%	61%	100%	13%		
E.T. PHASE ANGLE MEAS.			150°	107°	40°						
DIA OF DEFECT ±.003			Ø 3/16	Ø 7/64 [1]							

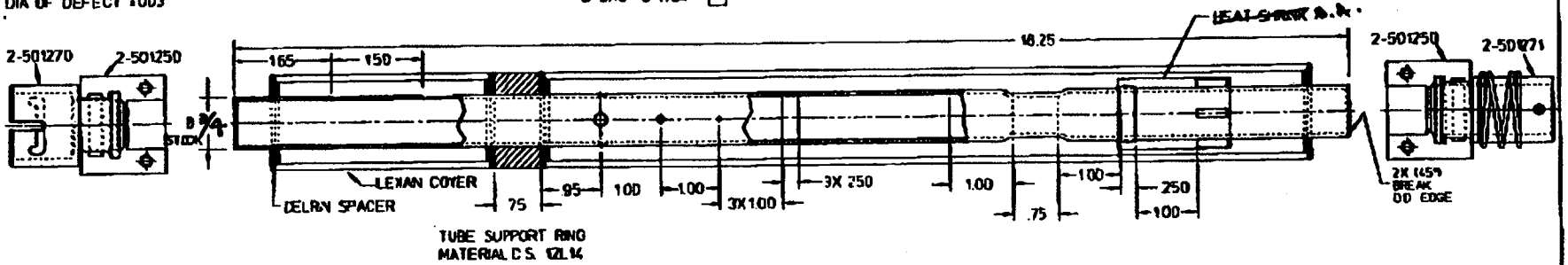

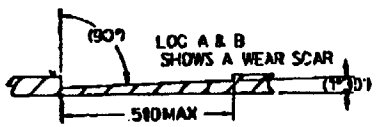

LOC C

SHOWS 4-FLAWS EQUALLY SPACED AROUND TUBE

LOC F THRU H

SHOWS OD AXIAL EDM NOTCH .250 LONG X .006 MAX. WIDE

LOC. I

SHOWS 360° DENT .75 WIDE X .007±.002 DP

LOC. J

SHOWS 360° COPPER RING .250 WIDE X .003 THK.

LOC. K

SHOWS 4X EQ SPACED (90°) APART EGG CRATE SIMULATION 2-416-1016 MATERIAL: C.S.12L14

MATERIAL INCONEL 600
AVERAGE MEAS WALL THK .048
NOMINAL WALL THK .048
HEAT LOT NO. 752677 ENTERGY OPS. NUCL.
TEST FREQ USED 430 KHz
SERIAL NO. Z-15880
PO NO 910579
REL. NO. NA
QUALITY REL. NO. NA
DATE MFG. 4-9-91
DA INSP. [signature]
CUSTOMER ENTERGY OPERATIONS
RECORDED 42
PROBE USED [illegible]
REVIEWED BY [signature]

NOTE:

UNL OTHERWISE SPECIFIED DIM ARE IN INCHES TOLERANCES DECIMAL FRACT. ±1/16 XXXX ±.003 XXX ±.015 XX ±.010 X ±.003 ANGULAR ±3°	DRAWN K ZEDKE	DATE 02/06/97	ZETEC INC
	CHECK [signature]	2/17/97	TITLE INLINE MISC. FLAWS W/COPPER DEPOSIT AND EGG CRATE SIMULATION D=4105-1-A P=3510
	DESIGN [signature]	2/17/97	SIMILAR
FINISH	APVD [signature]	2/18/97	DWG NO 2-416-1017
DET 000			SCALE NTS
			USED IN 2-416-0007 SHT 1 OF 2

PROCEDURE/WORK PLAN NO.	PROCEDURE/WORK PLAN TITLE:	PAGE:
2203.012A	ANNUNCIATOR 2K01 CORRECTIVE ACTION	CHANGE: 021-03-0

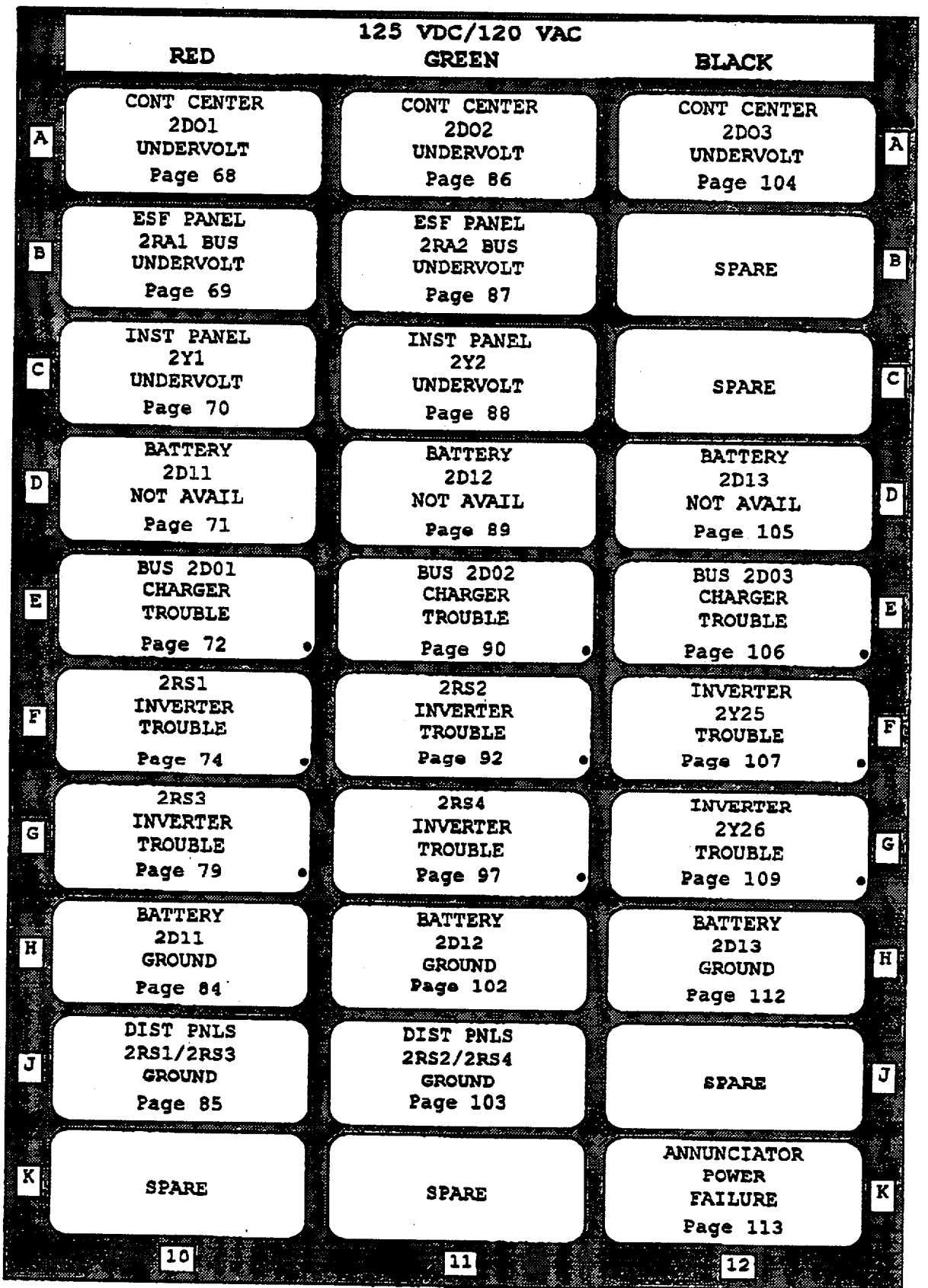

• denotes reflash capability

ANNUNCIATOR 2K01

A-10

CONT CENTER 2D01 UNDERVOLT

1.0 CAUSES

1.1 2D01 bus voltage ≤110 VDC (relay 27-2D01).

2.0 ACTION REQUIRED

2.1 Check 2D01 voltage on Computer Point (E2D01).

2.2 Check Battery Bank (2D-11) amps and voltage.

2.3 Check 2D11 Battery Charger (2D-31A or 2D-31B) amps and voltage.

2.4 IF battery charger amps are high
AND 2D11 is discharging,
THEN secure unnecessary 2D01 loads.

2.5 Refer to Loss of 125 VDC (2203.037).

2.6 Check for overloads or multiple grounds (both positive and negative).

2.7 Refer to Tech Specs 3.8.2.3 and 3.8.2.4.

2.8 IF BOTH of the following occur:

- 2D01 Bus Undervoltage alarm valid
- Original Steam Generators (OSGs) installed

THEN direct the Dedicated Cross-tie Operator (DXO) to obtain SDS02, EMERGENCY POWER FOR UNIT 2 ECCS VENT VALVES AND proceed to Corridor 340.

2.9 IF ALL of the following occur:

- 2D01 Bus Undervoltage alarm valid
- Original Steam Generators (OSGs) installed
- EITHER SG less than 70" WR
- At least 5 available CETs above 800°F
- A sustained Loss of ALL Feedwater has occurred

THEN Control Room Staff implement SDS02, Section 2 - " Powering 2CV-4698-1 from Vital Bus 2D26".

3.0 TO CLEAR ALARM

3.1 Raise bus 2D01 voltage above setpoint.

4.0 REFERENCES

4.1 E-2451-2A

ANNUNCIATOR 2K01

A-11

CONT CENTER 2D02 UNDERVOLT

1.0 CAUSES

1.1 2D02 bus voltage ≤110 VDC (relay 27-2D02).

2.0 ACTION REQUIRED

2.1 Check 2D02 voltage on Computer Point (E2D02).

2.2 Check Battery Bank (2D-12) amps and voltage.

2.3 Check 2D12 Battery Charger (2D-32A or 2D-32B) amps and voltage.

2.4 IF battery charger amps are high
AND 2D-12 is discharging,
THEN secure unnecessary 2D02 loads.

2.5 Refer to Loss of 125 VDC (2203.037).

2.6 Check for overloads or multiple grounds (both positive and negative).

2.7 Refer to Tech Specs 3.8.2.3 and 3.8.2.4.

2.8 IF BOTH of the following occur:

- 2D02 Bus Undervoltage alarm valid
- Original Steam Generators (OSGs) installed

THEN direct the Dedicated Cross-tie Operator (DXO) to obtain SDS02, EMERGENCY POWER FOR UNIT 2 ECCS VENT VALVES AND proceed to Corridor 340.

2.9 IF ALL of the following occur:

- 2D02 Bus Undervoltage alarm valid
- Original Steam Generators (OSGs) installed
- EITHER SG less than 70" WR
- At least 5 available CETs above 800°F
- A sustained Loss of ALL Feedwater has occurred

THEN Control Room Staff implement SDS02, Section 1 - " Powering 2CV-4740-2 from Vital Bus 2D27".

3.0 TO CLEAR ALARM

3.1 Raise bus 2D02 voltage above setpoint.

4.0 REFERENCES

4.1 E-2451-2A

	SHUTDOWN COOLING		EMERGENCY FEEDWATER	
A	LOSS OF SDC SUCTION Page 41	RCS LEVEL HI/LO Page 45	2P7B FAILURE ON EFAS Page 49	A
B	LPSI PUMP SUCT PRESS HI/LO Page 42	LPSI DISCH HEADER PRESS HI/LO Page 46	2P7B BREAKER TRIP Page 50	B
C	LPSI PUMP MOTOR AMPS HI/LO Page 43	SDC FLOW HI/LO Page 47	2P7B MOTOR OVERLOAD Page 51	C
D	SDC SUCTION PRESS HI Page 44	CET TEMP HI Page 48	EFW TRAIN A/B MISALIGNED PAGE 52	D
E	SPARE	SPARE	2P7B SUCTION PRESS HI/LO Page 53	E
F	SPARE	SPARE	2P7B DISCH PRESS HI/LO Page 54	F
G	SPARE	SPARE	2P7B TO A S/G FLOW HI/LO Page 55	G
H	SPARE	SPARE	2P7B TO B S/G FLOW HI/LO Page 56	H
J	SPARE	SPARE	SW TO 2P7B PRESS LO Page 57	J
K	SPARE	SPARE	2P7B RM CLR 2VUC-6B TROUBLE Page 58	K
	7	8	9	

ANNUNCIATOR 2K07

D-8

CET TEMP HI

NOTE

This alarm set at 700°F with Original Steam Generators (OSGs) installed.

1.0 CAUSES

1.1 CET temperature greater than variable alarm setpoint (2TI-4793).

2.0 ACTION REQUIRED

2.1 Verify temperature being controlled within desired band.

2.2 Use SPDS CET Display to verify temperature.

2.3 IF ALL of the following conditions exist:

- Original Steam Generators (OSGs) installed
- At least 5 available CETs above 800°F
- A sustained Loss of ALL Feedwater has occurred

THEN perform the following

2.3.1 Open ECCS Vent Valves

- 2CV-4698-1
- 2CV-4740-2

2.3.2 Declare Alert based on EAL 9.2 using 1903.011M, Alert Emergency Direction and Control Checklist - Shift Superintendent.

2.3.3 GO TO 2202.009, Functional Recovery

2.4 IF due to SDC failure,
THEN GO TO Loss of Shutdown Cooling (2203.029).

2.5 Adjust variable alarm setpoints as necessary.

3.0 TO CLEAR ALARM

3.1 Lower CET temperature below variable alarm setpoint (2TI-4793).

4.0 REFERENCES

4.1 E-2455-4

SAMG DEVELOPED STRATEGY	SAMG DEVELOPED STRATEGY TITLE:	PAGE: 1 of 3
SDS-02	SAMG DEVELOPED STRATEGY 02 EMERGENCY POWER FOR UNIT 2 ECCS VENT VALVES	

TABLE OF CONTENTS

SECTION		PAGE
1.	Powering 2CV-4740-2 from Vital Bus 2D27	2
2.	Powering 2CV-4698-1 from Vital Bus 2D26	3
	Reference ER002624N201	

SAMG DEVELOPED STRATEGY	SAMG DEVELOPED STRATEGY TITLE:	PAGE: 2 of 3
SDS-02	SAMG DEVELOPED STRATEGY 02 EMERGENCY POWER FOR UNIT 2 ECCS VENT VALVES	

SECTION 1

Powering 2CV-4740-2 from Vital Bus 2D27

NOTES

- **Operator actions should NOT be delayed for Health Physics, Security, or any other concerns.**
- **Elevators should NOT be used when performing this procedure.**
- **Prompt completion of these actions overrides all other procedures, technical specifications, or verbal directions other than those from Operations Management.**
- **Communications to DXO should use radio or telephone (extension 6091 for Corridor 340 and 6093 for 2B53 Room).**

1.0 Entry

- Performance of this attachment is directed by TSC or Control Room

2.0 ACTIONS

2.1 Open Valve 2CV-4698-1 (ECCS Vent Valve) from Control Room.

2.2 Open Breaker 2D02-21 (2D26 MCC Supply).

2.3 Retrieve DC Bus connection cable from cabinet/job box outside 2B53 Room and proceed to 2B53 Room (Door 257).

2.3 Open Breaker 2D27-A2 (Upstream Feeder Breaker to 2CV-4698-1).

CAUTION

Breaker 2D26-A2 (Upstream Feeder Breaker to 2CV-4740-2) MUST be opened to prevent energizing the entire 2D26 Bus.

2.4 Open Breaker 2D26-A2.

2.5 Open raceway between rows 1 and 2 of the following MCCs:

- MCC cabinet 2D26
- MCC cabinet 2D27.

2.6 Connect DC Bus connection cable to plugs in each raceway.

2.7 Close Breaker 2D27-A2.

2.8 Inform Control Room power restored to 2CV-4740-2.

2.9 Open valve 2CV-4740-2 from Control Room.

SAMG DEVELOPED STRATEGY	SAMG DEVELOPED STRATEGY TITLE:	PAGE:
SDS-02	SAMG DEVELOPED STRATEGY 02 EMERGENCY POWER FOR UNIT 2 ECCS VENT VALVES	3 of 3

SECTION 2

Powering 2CV-4698-1 from Vital Bus 2D26

NOTES

- **Operator actions should NOT be delayed for Health Physics, Security, or any other concerns.**
- **Elevators should NOT be used when performing this procedure.**
- **Prompt completion of these actions overrides all other procedures, technical specifications, or verbal directions other than those from Operations Management.**
- **Communications to DXO should use radio or telephone (extension 6091 for Corridor 340 and 6093 for 2B53 Room).**

1.0 Entry

- Performance of this attachment is directed by TSC or Control Room

2.0 ACTIONS

2.1 Open Valve 2CV-4740-2 (ECCS Vent Valve) from Control Room.

2.2 Open Breaker 2D01-21 (2D27 MCC Supply)

2.3 Retrieve DC Bus connection cable from cabinet/job box outside 2B53 Room and proceed to 2B53 Room (Door 257).

2.3 Open Breaker 2D26-A2 (Upstream Feeder Breaker to 2CV-4740-2).

CAUTION

Breaker 2D27-A2 (Upstream Feeder Breaker to 2CV-4698-1) MUST be opened to prevent energizing the entire 2D27 Bus.

2.4 Open Breaker 2D27-A2.

2.5 Open raceway between rows 1 and 2 of the following MCCs:

- MCC cabinet 2D26
- MCC cabinet 2D27.

2.6 Connect DC Bus connection cable to plugs in each raceway.

2.7 Close Breaker 2D26-A2.

2.8 Inform Control Room power restored to 2CV-4740-2.

2.9 Open valve 2CV-4698-1 from Control Room.

Emergency DC Crossconnect Watch
Study Guide

In the event of a loss of a total loss of feedwater, it may become necessary to depressurize the RCS to initiate feed and bleed cooling. Additionally, if high pressure safety injection and low pressure safety injection are unavailable in conjunction with a total loss of feedwater, it is critical that the RCS be depressurized to avoid the potential of steam generator tube failure due to the severe accident conditions. The ECCS vent valves can be used to depressurize the RCS. These valves relieve steam from the pressurizer to the quench tank. The ECCS vent path has two DC powered valves in series, so they may be operated with a complete loss of AC power. The ECCS vent valves are powered from opposite 125 volt vital DC power. A problem exists, looking at single failure criteria, if one train of DC power is lost.

A contingency action has been developed to deal with the loss of one train of vital 125 volt DC. Pigtails with female connectors will be connected to the 2D26 and 2D27 buses and hung in the raceway next to the affected valves. Outside the 2B-53 room will be a locked JOBOX with a procedure and a 30' connecting wire with male connectors on each end.

When a loss of a DC bus occurs, the annunciator corrective action procedure will direct the control room to dispatch the Emergency DC Crossconnect Watch to the access to 2B-53 room to obtain instructions sheet and then to STANDBY in the ESF Switchgear corridor (corridor 340) for further instruction. When the control room gives the order, the Crossconnect Watch will verify he is using the correct section of the procedure and proceed to completion.

To accomplish this task the procedure guides the control room operator to open the ECCS vent valve on the still energized bus prior to electrically isolating the pigtails. The Crossconnect Watch will then open the DC bus supply breaker to the deenergized MCC as directed by the control room operator (2D26 or 2D27) and proceed to the 2B53 room.. The Crossconnect Watch will then open the upstream feeder breakers to both ECCS vent valves. The Crossconnect Watch will then connect the extension cable. Once the cable connectors are locked in place, the feeder breaker to the ECCS vent valve on the energized bus is closed sending DC power to the opposite train vent valve. The second ECCS vent valve is then opened from the control room commencing depressurization of the RCS.

THE OPERATOR MUST REMAIN ON STATION AND IN CONSTANT COMMUNICATION WITH THE CONTROL ROOM.

The evolution is expected to take less than 15 minutes (and has been time-validated at less than 10 minutes), but the need for proper self-checking can not be ignored. This evolution is considered vital for plant operation. DO NOT STOP for anyone (including HP and security) unless the operator's life or health is at immediate risk.

Since the response needs to be timely, the Emergency DC Crossconnect Watch shall carry a radio, flashlight, and set of spare AO keys with them at all times. The AO keys will be tracked using the key log in the shifty's office. Proper turnover needs to include the updating of the key log. The qual card for this watch will be given to RO's, NLO's, and trainees. It is the shift manager's responsibility to ensure that he has a qualified person available each shift. The person manning the Emergency DC Crossconnect Watch (DXO) is entered on the Shift Turnover Checklist.

Attached are sections of resources that may be helpful.

Name_____
SSN_____

Emergency DC Crossconnect Watch

Objective: The objective of the Unit 2 Emergency DC Crossconnect Watch qualification card is to ensure that operators possess the knowledge and skills necessary to independently perform the assigned duty in a safe and efficient manner.

1.0 References:

1.1 STM 2-3, Reactor Coolant System
1.2 STM 2-32-5, 125 Vdc Electrical Distribution System
1.3 COPD001, Self-Verification/Additional Verification
1.4 COPD-15, Communication Standards
1.5 SDS-02, SAMG Developed Strategy 02

2.0 Knowledge Requirements:

2.1 Discuss the function and importance of ECCS vent valves during Severe Accident Mitigation.
2.2 Discuss the type of valve ECCS vents are and where their controls are located.
2.3 Discuss the affect of a loss of 2D01 or 2D02 on the ECCS vent valves.
2.4 Discuss the duties and responsibilities of the Emergency DC Crossconnect Watch.
  2.4.1 What actions are required
  2.4.2 Use of self-verification
  2.4.3 Operation of a DC breaker
  2.4.4 Operation of a molded case breaker
  2.4.5 Response time required
  2.4.6 Expectation to remain on station
2.5 Equipment required for watchstanding.
2.6 Purpose and use of key log.
2.7 Proper communication and radio use.
2.8 Turnover of watchstanding duties.

_____/_____
OPS Supervisor

3.0 Performance Tasks:

3.1 Crossconnect 2D26 and 2D27 to power 2CV-4740-2 from 2D27 (SDS-02, Section 1)

T _____/_____ E _____/_____
OPS Supervisor OPS Supervisor

3.2 Crossconnect 2D26 and 2D27 to power 2CV-4698-1 from 2D26 (SDS-02, Section 2)

T _____/_____ E _____/_____
OPS Supervisor OPS Supervisor

4.0 Final Certification:

_____/_____
Shift Superintendent

6.7 Auxiliary Operator

6.7.1 The Auxiliary Operator reports to the CRS of their respective Unit and is responsible for all operational activities executed outside the Control Room associated with secondary auxiliary components and systems.

6.7.2 Specific responsibilities and authorities assigned to the Auxiliary Operator are the same as those stated in Section 6.6.2 and 6.6.3 for the Waste Control Operator.

CAUTION

Dedicated Cross-tie Operator (DXO) is a Unit 2 specific watchstation and SHALL be manned when Unit 2 Original Steam Generators (OSGs) are installed.

6.8 Dedicated Cross-tie Operator (DXO)

6.8.1 The Dedicated Cross-tie Operator (when manned) reports to the CRS of Unit 2 and is responsible for implementation of Severe Accident Management Guideline (SAMG) Developed Strategy 02 (SDS02), "EMERGENCY POWER FOR UNIT 2 ECCS VENT VALVES".

6.8.2 Specific responsibilities and authority assigned to the Dedicated Cross-tie Operator include the following:

- Maintain manned status when Original Steam Generators (OSGs) are installed on Unit 2.
- Maintain response capability with appropriate equipment
  - Radio
  - Flashlight
  - Key to Door 257 (Room 2091 AKA 2B53 Room)
- Implement SDS02 when directed by the CRS or the Technical Support Center (TSC). A copy of SDS02 is housed with the DC Bus connection cable at cabinet/job box outside Door 257.

6.9 Shift Engineer (SE)/Shift Technical Advisor (STA)

6.9.1 The SE/STA is responsible to be within operable communication range and available to the Control Room within ten minutes of call by the Control Room personnel.

(3.3.13)

6.9.2 **The SE/STA is responsible to maintain respirator qualifications, and if corrective eyewear is normally needed, maintain appropriate SCBA eyewear (spectacles or contact lenses) readily available.**

SHIFT TURNOVER CHECKLIST MODES 1 - 4

INSTRUCTIONS:

1.0 Circle YES, NO or N/A for each item in any desired order.

2.0 N/A items not applicable due to mode or being aligned to other train.

3.0 If NO is circled, then explain in the Remarks section.

4.0 If NO is circled on a Tech Spec (TS) required component, then refer to associated Tech Spec Action Statement and notify opposite unit, as applicable.

Mode: _____ Date: _____ Time: _____

A. SDBCS ALIGNMENT (2C02)

1.	2CV-1002 (A S/G Upstream ADV Isol) closed	YES	NO
2.	2CV-1052 (B S/G Upstream ADV Isol) closed	YES	NO
3.	2CV-1001 (Upstream ADV) closed, HIC in Manual, permissive in Off	YES	NO
4.	2CV-1051 (Upstream ADV) closed, HIC in Manual, permissive in Off	YES	NO
5.	2CV-0301 (DDV) closed, HIC in Auto and permissive HS in Auto	YES	NO
6.	2CV-0305 (DDV) closed, HIC in Auto and permissive HS in Auto	YES	NO
7.	2CV-0302 (Bypass Vlv) closed, HIC in Auto, permissive HS in Auto	YES	NO
8.	2CV-0303 (Bypass Vlv) closed, HIC in Auto, permissive HS in Auto	YES	NO
9.	2CV-0306 (Bypass Vlv) closed, HIC in Auto, permissive HS in Auto	YES	NO

B. SHUTDOWN COOLING (2C04)

Two independent ECCS subsytems required operable in Mode 1, 2 & 3 with PZR pressure ≥1700 psia. (TS 3.5.2)

1.	2CV-5091 (LPSI Disch Header) open.	YES	NO	N/A
2.	2HS-5091 in ESF with the key removed.	YES	NO	N/A
3.	2FIC-5091 (LPSI Disch Hdr Flow) in Auto & set at ~2500 gpm.	YES	NO	N/A
4.	IF 2TI-4793 NOT in use for SDC, THEN 2TI-4793 energized AND CET alarms set at 700°F	YES	NO	N/A

SHIFT TURNOVER CHECKLIST MODES 1 - 4

W. MSIS

1. IF a MSIS actuation channel becomes inoperable in 2C39 or 2C40, THEN restore the actuation channel within one hour or be in Hot Standby within 6 hours.

2. IF a component required for MFW isolation becomes inoperable (i.e., a Condensate, MFW, or Heater Drain pump will not trip on MSIS), THEN restore the component within 48 hours or place it in its MSIS actuated state. Otherwise be in Hot Standby in 6 hours.

COMMENTS:

_____

_____

_____

_____

_____

If position manned, then list on shift personnel:

S/S _____ CRS _____

CRSA _____ TRO _____

CBOR _____ CBOT _____

WCO _____ AO _____

EOF _____ SE _____

DXO* _____

*IF Original Steam Generators (OSGs) installed, THEN Dedicated Cross-tie Operator (DXO) manned.

PERFORMED BY: _____

REVIEWED BY: _____

INSTRUCTIONS	CONTINGENCY ACTIONS
■19. IF EITHER of the following conditions exist: A. EITHER SG with level less than 70 inches. B. RCS T_C rising in an uncontrolled manner. THEN establish Heat Removal via Once Through Cooling as follows: A. Close MSIVs from Control Room. B. Manually actuate SIAS and CCAS. C. Verify ALL HPSI Cold Leg Injection MOVs open. D. Verify ALL available Charging pumps running. E. Check 4160v Vital buses 2A3 and 2A4 energized from offsite power.	E. Perform the following: 1) IF EITHER 4160v Vital bus energized from offsite power, THEN perform the following: a) Commence aligning third HPSI pump to associated bus. b) WHEN third HPSI pump alignment complete, THEN verify third HPSI pump running. 2) IF ANY 4160v Vital bus energized from DG, THEN perform the following: a) Verify ONE HPSI pump running on train supplied by DG. b) GO TO Step 19.G.

(Step 19 continued on next page)

INSTRUCTIONS	CONTINGENCY ACTIONS
19. (continued)	
F. Verify three HPSI pumps running.	
*G. Verify at least ONE HPSI pump running.	*G. IF NO HPSI pumps running, THEN perform the following: 1) Verify MSIVs closed 2) **GO TO** step 19.J.
H. Open ECCS PZR Vent valve (2CV-4698-1).	H. Open LTOP Relief Isolation valve (2CV-4741-1).
I. Open LTOP/ECCS Relief Isolation valve (2CV-4740-2).	I. Perform the following: 1) Open LTOP Relief Isolation valve (2CV-4731-2). 2) Open LTOP Relief Isolation valve (2CV-4730-1).
J. Maintain BOTH SG pressures 950-1050 psia using upstream ADVs or upstream ADV isolation MOVs.	
K. **GO TO** 2202.009, Functional Recovery.	
***20. Check FW flow restored to at least ONE SG by ANY of the following:** • EFW • AFW • MFW • Condensate	***20. IF FW flow NOT restored, THEN RETURN TO Step 11.**
***21. Maintain SG pressure less than 1050 psia:**	
A. Control SG pressure using SDBCS Bypass valves or ADVs.	
B. Check at least ONE Condensate pump running.	B. Start ONE Condensate pump using 2106.016, Condensate and Feedwater Operations.

(Step 21 continued on next page)

1448 S. R. 333
Russellville, AR 72802

FAX: 501-858-4885

ARKANSAS NUCLEAR ONE
ENTERGY OPERATIONS

Fax

To: Tom Alexion From: John Dosa

Fax: Pages: 10

Phone: Date: 6/13/00

Re: CC:

☐ Urgent ☐ For Review ☐ Please Comment ☐ Please Reply ☐ Please Recycle

• Comments:

#11 response

Additional Mp Data for ANO2 Revision 2
June 12, 2000

The attached four tables of data are the Mp and/or M values for the following predicted conditions:

- (TABLE 1) Mp for beginning of cycle following 2P99 (Case 1')
- (TABLE 2) Mp for conditions at 2P00 (Case 2') which is June 15th, 2000
- (TABLE 3) Mp for conditions at 2R14 (Case 3') which is September 15th, 2000
- (TABLE 4) M for all three conditions. There is not a separate M table for each condition since M is based on lengths and the lengths are kept constant through out the intervals

This data was generated using the most recent model that was submitted based on use of the following:

- Bi-variant probability of detection (POD) using peak depth and bobbin volts
- Five independent POD curves used probabilistically
- Probabilistic growth based on ANO specific data
- Sizing uncertainty of 12.7%
- Depth based on profiled data

Also attached are the probability distribution graphs for the data listed above.

6/12/2000

Mp Values for Case 1'
Beginning of Cycle Conditions

MP	CDF	MP	CDF	MP	CDF
1.1	0.06777	4.1	0.99920	7.1	0.99985
1.2	0.47099	4.2	0.99932	7.2	0.99985
1.3	0.71055	4.3	0.99935	7.3	0.99985
1.4	0.82756	4.4	0.99942	7.4	0.99985
1.5	0.89105	4.5	0.99948	7.5	0.99986
1.6	0.92681	4.6	0.99953	7.6	0.99986
1.7	0.94922	4.7	0.99954	7.7	0.99987
1.8	0.96363	4.8	0.99959	7.8	0.99988
1.9	0.97313	4.9	0.99961	7.9	0.99988
2.0	0.97940	5.0	0.99964	8.0	0.99988
2.1	0.98441	5.1	0.99968	8.1	0.99988
2.2	0.98805	5.2	0.99970	8.2	0.99988
2.3	0.99067	5.3	0.99973	8.3	0.99988
2.4	0.99240	5.4	0.99973	8.4	0.99988
2.5	0.99382	5.5	0.99973	8.5	0.99988
2.6	0.99489	5.6	0.99974	8.6	0.99988
2.7	0.99566	5.7	0.99975	8.7	0.99988
2.8	0.99634	5.8	0.99976	8.8	0.99988
2.9	0.99690	5.9	0.99976	8.9	0.99988
3.0	0.99727	6.0	0.99976	9.0	0.99988
3.1	0.99759	6.1	0.99977	9.1	0.99991
3.2	0.99791	6.2	0.99980	9.2	0.99991
3.3	0.99815	6.3	0.99980	9.3	0.99991
3.4	0.99835	6.4	0.99982	9.4	0.99991
3.5	0.99851	6.5	0.99983	9.5	0.99991
3.6	0.99866	6.6	0.99983	9.6	0.99991
3.7	0.99881	6.7	0.99983	9.7	0.99991
3.8	0.99889	6.8	0.99983	9.8	0.99991
3.9	0.99902	6.9	0.99984	9.9	0.99991
4.0	0.99914	7.0	0.99985	10.0	0.99991

TABLE 1

6/12/2000

Mp Values for Case 2'
Conditions at 2P00

MP	CDF	MP	CDF	MP	CDF
1.1	0.03814	4.1	0.99820	7.1	0.99960
1.2	0.37440	4.2	0.99830	7.2	0.99960
1.3	0.64070	4.3	0.99840	7.3	0.99960
1.4	0.78230	4.4	0.99860	7.4	0.99960
1.5	0.86100	4.5	0.99860	7.5	0.99960
1.6	0.90720	4.6	0.99880	7.6	0.99960
1.7	0.93490	4.7	0.99880	7.7	0.99960
1.8	0.95270	4.8	0.99890	7.8	0.99960
1.9	0.96470	4.9	0.99900	7.9	0.99960
2.0	0.97260	5.0	0.99910	8.0	0.99970
2.1	0.97850	5.1	0.99910	8.1	0.99970
2.2	0.98270	5.2	0.99920	8.2	0.99970
2.3	0.98590	5.3	0.99920	8.3	0.99970
2.4	0.98840	5.4	0.99920	8.4	0.99970
2.5	0.99020	5.5	0.99930	8.5	0.99970
2.6	0.99180	5.6	0.99930	8.6	0.99970
2.7	0.99310	5.7	0.99930	8.7	0.99970
2.8	0.99390	5.8	0.99940	8.8	0.99970
2.9	0.99470	5.9	0.99940	8.9	0.99970
3.0	0.99510	6.0	0.99940	9.0	0.99970
3.1	0.99580	6.1	0.99940	9.1	0.99970
3.2	0.99620	6.2	0.99940	9.2	0.99980
3.3	0.99650	6.3	0.99950	9.3	0.99980
3.4	0.99680	6.4	0.99950	9.4	0.99980
3.5	0.99720	6.5	0.99950	9.5	0.99980
3.6	0.99750	6.6	0.99950	9.6	0.99980
3.7	0.99770	6.7	0.99950	9.7	0.99980
3.8	0.99780	6.8	0.99950	9.8	0.99980
3.9	0.99790	6.9	0.99950	9.9	0.99980
4.0	0.99810	7.0	0.99960	10.0	0.99980

TABLE 2

6/12/2000

Mp Values for Case 3'
Conditions at 2R14

MP	CDF	MP	CDF	MP	CDF
1.1	0.03414	4.1	0.99754	7.1	0.99917
1.2	0.33176	4.2	0.99768	7.2	0.99917
1.3	0.60255	4.3	0.99783	7.3	0.99917
1.4	0.75443	4.4	0.99798	7.4	0.99920
1.5	0.83988	4.5	0.99808	7.5	0.99921
1.6	0.89146	4.6	0.99815	7.6	0.99921
1.7	0.92253	4.7	0.99820	7.7	0.99924
1.8	0.94238	4.8	0.99830	7.8	0.99925
1.9	0.95614	4.9	0.99838	7.9	0.99927
2.0	0.96561	5.0	0.99849	8.0	0.99927
2.1	0.97261	5.1	0.99850	8.1	0.99929
2.2	0.97792	5.2	0.99856	8.2	0.99930
2.3	0.98169	5.3	0.99861	8.3	0.99931
2.4	0.98432	5.4	0.99863	8.4	0.99931
2.5	0.98676	5.5	0.99868	8.5	0.99932
2.6	0.98882	5.6	0.99874	8.6	0.99933
2.7	0.99033	5.7	0.99875	8.7	0.99933
2.8	0.99148	5.8	0.99880	8.8	0.99935
2.9	0.99257	5.9	0.99882	8.9	0.99936
3.0	0.99351	6.0	0.99885	9.0	0.99936
3.1	0.99419	6.1	0.99888	9.1	0.99936
3.2	0.99470	6.2	0.99892	9.2	0.99937
3.3	0.99518	6.3	0.99895	9.3	0.99937
3.4	0.99566	6.4	0.99901	9.4	0.99938
3.5	0.99602	6.5	0.99904	9.5	0.99940
3.6	0.99643	6.6	0.99909	9.6	0.99940
3.7	0.99679	6.7	0.99911	9.7	0.99941
3.8	0.99699	6.8	0.99914	9.8	0.99941
3.9	0.99720	6.9	0.99916	9.9	0.99941
4.0	0.99743	7.0	0.99916	10.0	0.99941

TABLE 3

6/12/2000

M Values for All Operating Intervals

M	CDF	M	CDF	M	CDF
1.0	0.00002	4.1	0.97530	7.2	1.00000
1.1	0.00002	4.2	0.97530	7.3	1.00000
1.2	0.00002	4.3	0.98160	7.4	1.00000
1.3	0.00486	4.4	0.98160	7.5	1.00000
1.4	0.01795	4.5	0.98568	7.6	1.00000
1.5	0.02815	4.6	0.98568	7.7	1.00000
1.6	0.07344	4.7	0.98568	7.8	1.00000
1.7	0.12220	4.8	0.98568	7.9	1.00000
1.8	0.16248	4.9	0.98568	8.0	1.00000
1.9	0.22495	5.0	0.98568	8.1	1.00000
2.0	0.29096	5.1	0.98568	8.2	1.00000
2.1	0.35963	5.2	0.98568	8.3	1.00000
2.2	0.43818	5.3	0.98568	8.4	1.00000
2.3	0.46410	5.4	0.99795	8.5	1.00000
2.4	0.48550	5.5	0.99795	8.6	1.00000
2.5	0.52196	5.6	0.99795	8.7	1.00000
2.6	0.56015	5.7	0.99795	8.8	1.00000
2.7	0.65145	5.8	0.99795	8.9	1.00000
2.8	0.68932	5.9	0.99979	9.0	1.00000
2.9	0.73285	6.0	1.00000	9.1	1.00000
3.0	0.74418	6.1	1.00000	9.2	1.00000
3.1	0.75898	6.2	1.00000	9.3	1.00000
3.2	0.80621	6.3	1.00000	9.4	1.00000
3.3	0.83554	6.4	1.00000	9.5	1.00000
3.4	0.87185	6.5	1.00000	9.6	1.00000
3.5	0.89144	6.6	1.00000	9.7	1.00000
3.6	0.89308	6.7	1.00000	9.8	1.00000
3.7	0.91485	6.8	1.00000	9.9	1.00000
3.8	0.93504	6.9	1.00000	10.0	1.00000
3.9	0.95144	7.0	1.00000		
4.0	0.97302	7.1	1.00000		

TABLE 4

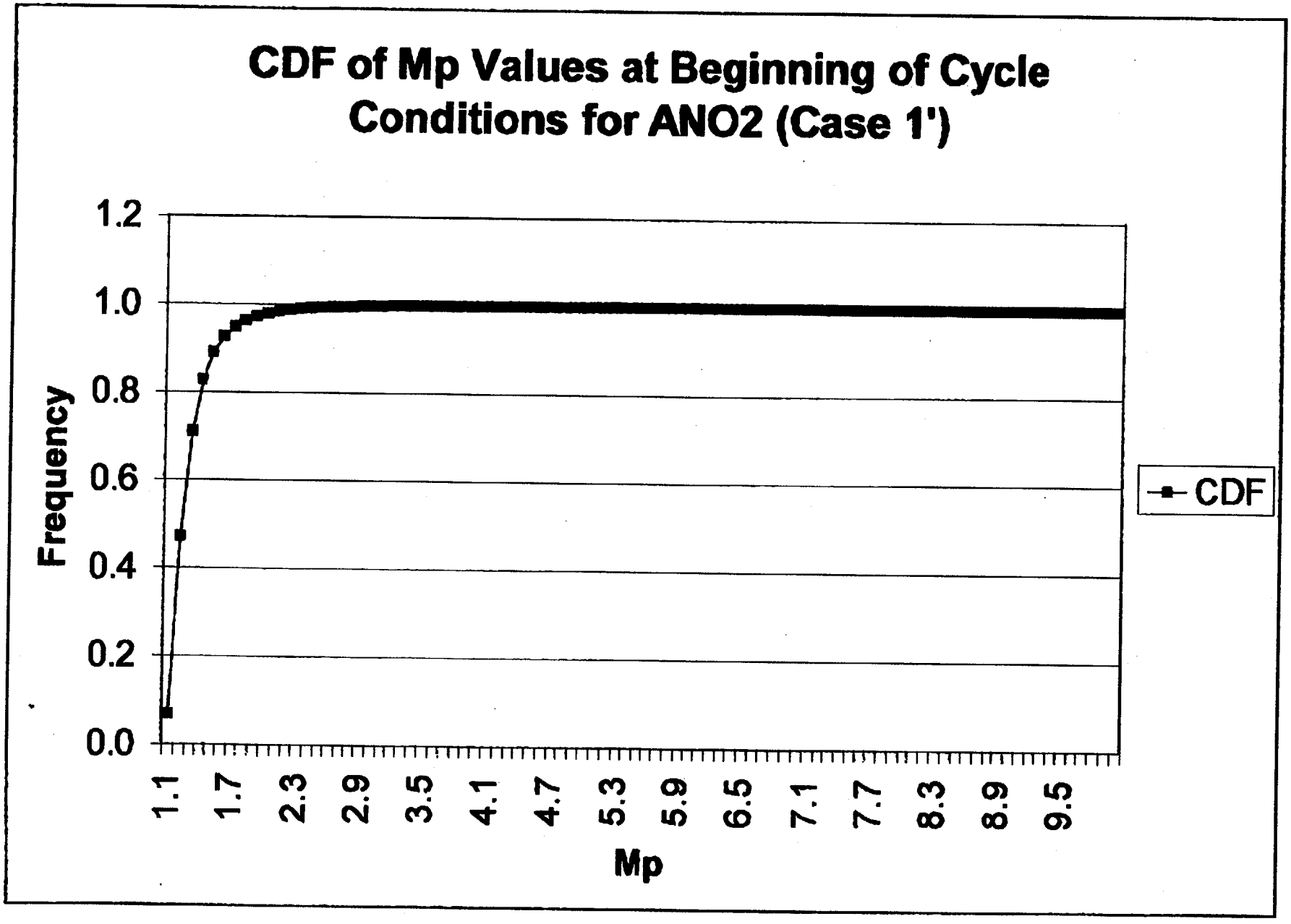
CDF of Mp Values at Beginning of Cycle Conditions for ANO2 (Case 1')
Frequency
1.2
1.0
0.8
0.6
0.4
0.2
0.0
1.1
1.7
2.3
2.9
3.5
4.1
4.7
5.3
5.9
6.5
7.1
7.7
8.3
8.9
9.5
Mp
CDF

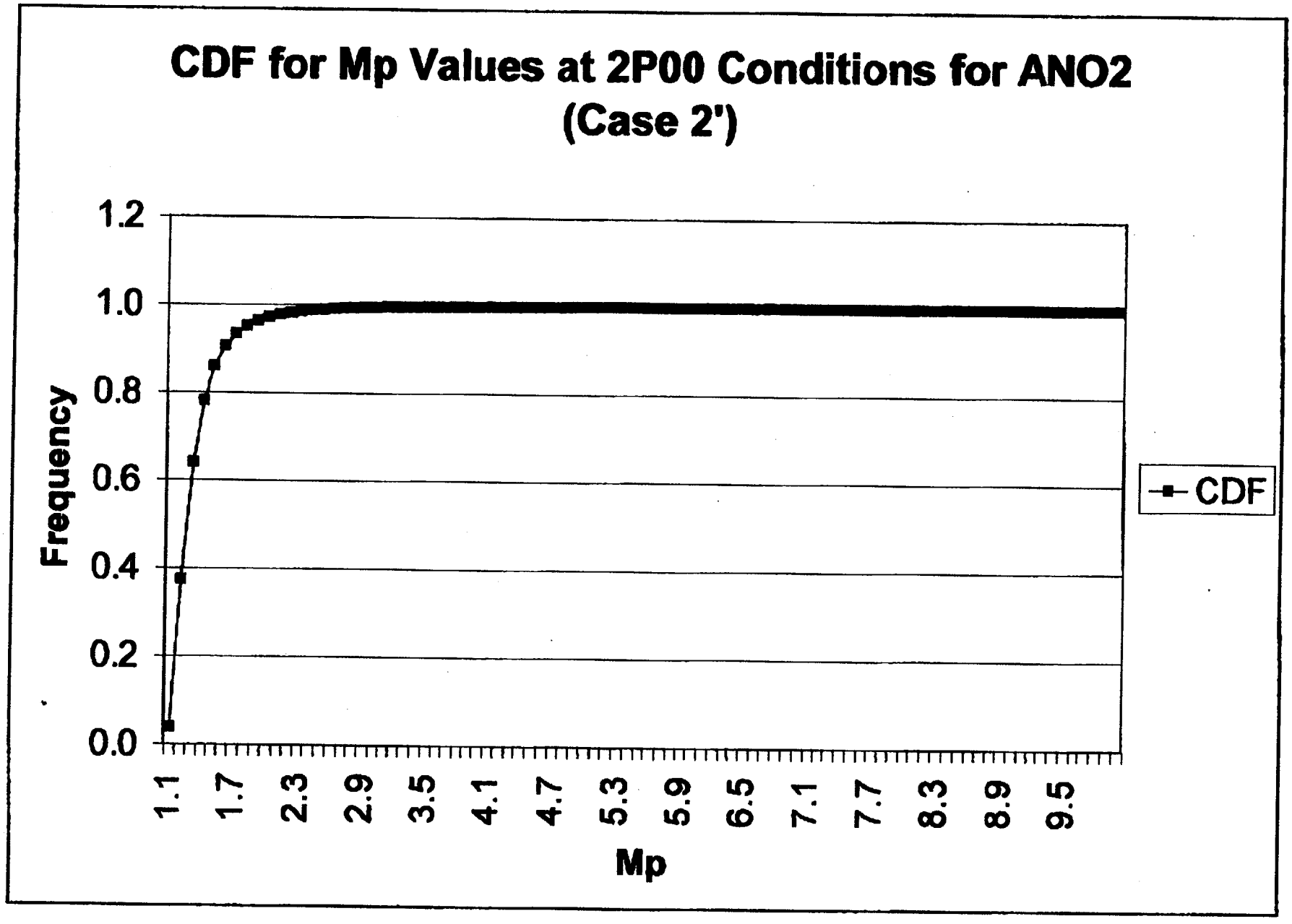
CDF for Mp Values at 2P00 Conditions for ANO2
(Case 2')
Frequency
1.2
1.0
0.8
0.6
0.4
0.2
0.0
1.1
1.7
2.3
2.9
3.5
4.1
4.7
5.3
5.9
6.5
7.1
7.7
8.3
8.9
9.5
Mp
CDF

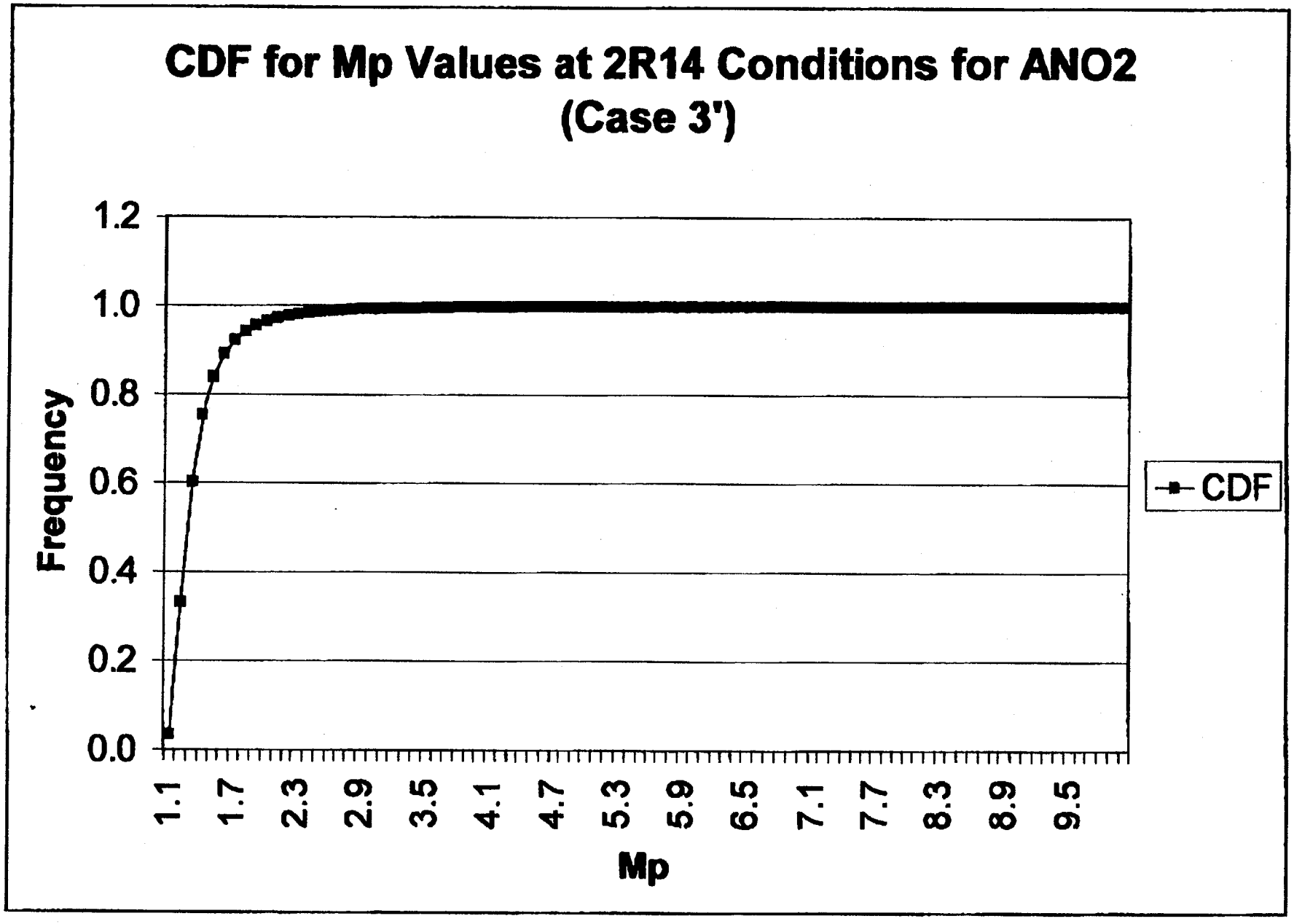
CDF for Mp Values at 2R14 Conditions for ANO2
(Case 3')
Frequency
1.2
1.0
0.8
0.6
0.4
0.2
0.0
1.1
1.7
2.3
2.9
3.5
4.1
4.7
5.3
5.9
6.5
7.1
7.7
8.3
8.9
9.5
Mp
CDF

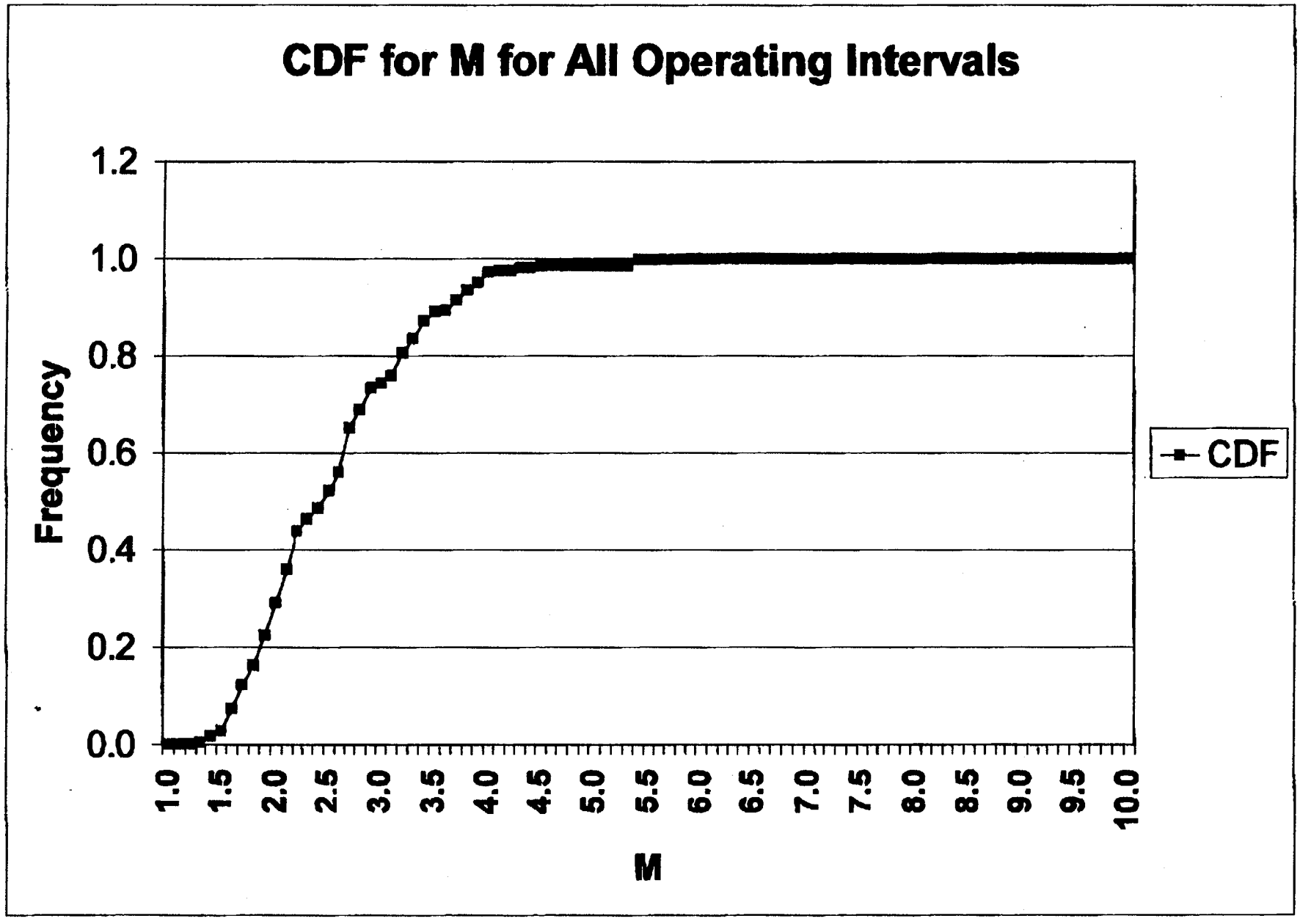
CDF for M for All Operating Intervals
Frequency
1.2
1.0
0.8
0.6
0.4
0.2
0.0
1.0
1.5
2.0
2.5
3.0
3.5
4.0
4.5
5.0
5.5
6.0
6.5
7.0
7.5
8.0
8.5
9.0
9.5
10.0
M
CDF

1448 S. R. 333
Russellville, AR 72802

FAX: 501-858-4885

ARKANSAS NUCLEAR ONE
ENTERGY OPERATIONS

Fax

To: Tom Alexion From: Dale James

Fax: Pages:

Phone: Date:

Re: CC:

☐ Urgent ☐ For Review ☐ Please Comment ☐ Please Reply ☐ Please Recycle

• Comments:

Additional Mp Data for ANO2 Revision 1
June 6, 2000

The attached table of data was previously submitted that contained an error. The original table had the M values instead of Mp values listed under MP50. The attached table has been corrected. The following is an explanation of the data:

1. Uses the 185 indications identified in 2P99 by individual flaws.

2. The bobbin volts are based on the mix channel response.

3. The Mp data is the median value.

4. The POD is the average of the 5 curves using both maximum depth and bobbin voltage as inputs.

5. Maximum depth is based on the RPC profile data

6. Length is based on the RPC raw data measurement.

The following are descriptions of the titles:

ROW	Tube Row
COL	Tube Column
TSP	Tube Support Plate
POS	Tube Position
AVG DEP	Average Depth
MAX DEP	Maximum Depth
Bobbin Volts	Bobbin Volts
LENGTH	Length
MP50	Mp (median value)
PODAV	Average POD Value

	ROW	COL	TSP	POS	AVG DEP	MAX DEP	Bobbin Volts	LENGTH	MP50	PODAV
1	72	72	02H	0.27	80.95	92	0.99	1.34	3.6790	0.99767
2	102	110	02H	0.06	82.66	99	0.68	1.55	3.4272	0.99300
3	8	134	01H	0.48	90.09	100	2.49	0.56	3.4206	1.00000
4	102	98	02H	0.24	79.61	94	0.23	0.6	2.8097	0.90719
5	53	83	01H	0.1	78.23	98	0.71	0.64	2.6026	0.99363
6	17	49	06H	0.58	74.39	87	0.44	0.77	2.5952	0.95502
7	1	51	04H	0.49	71.94	86	0.6	0.95	2.4899	0.97883
8	32	108	01H	-0.18	65.06	81	1.66	0.55	2.4328	0.99977
9	32	108	01H	-0.61	57.71	98	1.66	0.68	2.4119	0.99991
10	23	55	02H	0.29	63.74	79	0.3	1.39	2.3588	0.86605
11	47	91	01H	0.49	67.57	79	1.1	0.91	2.2752	0.99707
12	26	40	02H	0.63	75.14	92	0.19	0.64	2.2517	0.87526
13	36	36	02H	0.33	62.88	73	0.42	1.03	2.1836	0.89927
14	9	115	01H	-0.66	68.15	88	0.43	0.49	2.1749	0.95506
15	36	116	01H	0.57	54.60	67	0.7	0.78	2.1581	0.96380
16	16	140	03H	-0.39	57.05	69	0.89	0.71	2.1224	0.98660
17	48	52	01H	0.72	59.18	71.5	0.49	0.66	2.1156	0.92232
18	33	71	01H	0.46	70.58	82	0.34	0.69	2.0945	0.90435
19	28	36	02H	0.35	62.52	90	0.34	0.49	2.0823	0.93567
20	32	100	01H	0.16	73.49	97	1.82	0.52	2.0667	0.99995
21	32	46	02H	0.7	68.32	82	0.82	0.62	2.0612	0.99096
22	4	156	02H	0.72	59.06	70	0.41	0.5	2.0299	0.87798
23	5	153	07H	0.37	89.07	97	0.62	0.59	1.9862	0.98944
24	10	150	01H	0.41	75.57	85.5	0.66	0.38	1.9768	0.98384
25	68	44	03H	0.54	56.22	85	0.19	0.98	1.9719	0.82881
26	33	109	01H	-0.41	61.34	68	0.32	0.81	1.9381	0.79940
27	33	71	01H	-0.53	64.38	91	0.34	0.42	1.9155	0.93884
28	58	106	01H	-0.52	64.01	91	0.41	0.55	1.9152	0.95737
29	37	95	01H	-0.55	56.73	72	0.51	0.99	1.9004	0.93118

	ROW	COL	TSP	POS	AVG DEP	MAX DEP	Bobbin Volts	LENGTH	MP50	PODAV
30	32	108	01H	0.19	64.82	82.5	1.49	0.49	1.8991	0.99957
31	67	57	01H	0.79	75.65	85	0.66	0.43	1.8785	0.98339
32	106	90	02H	0.54	67.85	91.5	0.41	0.71	1.8737	0.95846
33	84	76	01H	0.63	72.09	91	0.48	0.49	1.8684	0.97026
34	10	16	02H	0.38	55.83	74	0.49	0.94	1.8577	0.93155
35	77	113	01H	0.39	60.17	79	0.71	0.56	1.8490	0.98195
36	9	127	01H	0.75	67.60	84	0.37	0.39	1.8351	0.92534
37	77	125	02H	0.36	62.31	89	0.3	0.82	1.8334	0.91709
38	47	93	01H	-0.6	57.64	69.5	0.29	0.76	1.8323	0.78587
39	12	106	01H	0.61	54.73	65	0.39	0.78	1.8273	0.83150
40	16	118	01H	0.49	54.41	69	0.35	0.81	1.8119	0.83184
41	9	115	01H	0.49	70.92	96	0.43	0.78	1.7990	0.97040
42	95	45	02H	0.64	63.85	86	0.43	0.43	1.7911	0.95017
43	29	123	04H	0.52	69.31	77	0.39	0.84	1.7854	0.90433
44	48	96	01H	-0.12	53.30	67	0.41	0.96	1.7844	0.85945
45	7	61	02H	0.62	59.73	96	0.37	0.46	1.7768	0.95947
46	13	31	02H	-0.05	56.73	90	0.6	0.85	1.7688	0.98294
47	60	44	02H	0.43	54.26	72	0.25	0.9	1.7677	0.77126
48	49	77	01H	0.78	85.14	97.5	0.52	0.39	1.7615	0.98288
49	4	20	01H	-0.11	59.06	68.5	1.55	0.71	1.7440	0.99926
50	68	112	02H	-0.03	58.36	69	0.55	0.69	1.7416	0.93375
51	20	52	01H	0.75	62.59	79	0.53	0.51	1.7396	0.95652
52	52	36	01H	0.58	54.22	73	0.32	0.75	1.7358	0.83922
53	1	51	03H	0.58	56.91	69	0.63	0.62	1.7352	0.95469
54	65	97	02H	-0.5	55.51	69	0.55	0.58	1.7288	0.93375
55	47	93	01H	-0.31	52.57	65	0.29	0.97	1.7214	0.74218
56	63	115	01H	0.05	66.35	78	0.44	0.64	1.7144	0.92868
57	8	148	01H	0.6	54.82	72	0.49	0.65	1.6857	0.92425
58	12	106	01H	-0.39	51.75	63	0.47	0.85	1.6670	0.87078

Mp Values with Corresponding Bobbin Bolts and POD Revision 1

	ROW	COL	TSP	POS	AVG DEP	MAX DEP	Bobbin Volts	LENGTH	MP50	PODAV
59	65	125	02H	-0.71	63.46	72	0.52	0.46	1.6612	0.93441
60	36	116	01H	0.62	63.02	75	0.7	0.39	1.6478	0.97646
61	42	38	01H	0.52	51.38	72	0.41	0.39	1.6461	0.88913
62	28	44	01H	-0.01	51.47	93	0.69	1.58	1.6457	0.99074
63	63	123	02H	0.4	81.83	93	0.31	0.59	1.6417	0.93542
64	48	52	01H	0.66	72.17	84	0.49	0.51	1.6344	0.95916
65	60	108	01H	0.13	52.86	62	0.41	1.14	1.6291	0.82343
66	77	83	02H	-0.33	68.27	85	0.22	0.38	1.6230	0.85132
67	60	108	01H	0.63	57.33	67	0.41	1.08	1.6218	0.85945
68	12	62	01H	0.3	51.19	69	0.37	0.44	1.6193	0.84633
69	10	150	03H	0.37	78.14	97	1.32	0.59	1.6162	0.99961
70	4	28	01H	-0.46	51.26	64	0.67	0.72	1.6080	0.95118
71	11	143	01H	0.69	79.25	86.5	0.33	0.33	1.5848	0.91940
72	16	140	03H	0.46	66.39	76	0.89	0.72	1.5833	0.99092
73	38	110	01H	0.69	44.81	73	0.36	0.89	1.5809	0.86632
74	42	38	01H	0.04	80.03	92	0.41	0.7	1.5796	0.95953
75	13	55	01H	0.12	51.43	68	0.87	0.59	1.5772	0.98447
76	75	89	02H	0.75	77.66	92	0.77	0.49	1.5690	0.99339
77	11	155	02H	0.76	60.39	79	0.58	0.4	1.5662	0.96600
78	11	13	03H	0.13	65.54	82	0.24	0.54	1.5648	0.84505
79	104	116	01H	-0.58	68.75	83	0.2	0.23	1.5572	0.82154
80	89	73	02H	0.55	52.38	74	0.24	0.67	1.5429	0.78035
81	4	156	02H	-0.44	65.18	82	0.41	0.83	1.5428	0.93240
82	115	65	02H	0.4	54.06	66	0.55	0.41	1.5422	0.92284
83	75	85	03H	0.56	57.52	69	0.49	0.67	1.5368	0.91198
84	92	102	02H	0.62	68.08	81	0.24	0.35	1.5315	0.83792
85	38	144	03H	-0.59	72.77	85	0.3	0.36	1.5292	0.89925
86	65	119	01H	-0.57	45.86	68	0.3	0.53	1.5253	0.78140
87	36	116	01H	0.17	61.93	81	0.7	0.72	1.5237	0.98301

Mp Values with Corresponding Bobbin Bolts and POD Revision 1

	ROW	COL	TSP	POS	AVG DEP	MAX DEP	Bobbin Volts	LENGTH	MP50	PODAV
88	67	111	01H	-0.48	56.96	73	0.52	0.59	1.5233	0.93768
89	84	112	02H	0.51	59.16	98	0.44	0.79	1.5196	0.97472
90	106	90	02H	-0.24	62.79	92	0.41	0.61	1.5115	0.95953
91	14	112	04H	0.56	47.13	67	0.22	0.59	1.4994	0.68584
92	40	116	01H	0.53	57.66	84	0.83	0.46	1.4988	0.99228
93	23	143	01H	-0.33	34.03	47	0.38	0.27	1.4891	0.63873
94	10	150	01H	0.66	55.20	69	0.66	0.46	1.4876	0.96070
95	2	34	02H	0.1	60.78	86	0.2	0.94	1.4832	0.84374
96	28	36	02H	-0.19	53.76	75	0.34	0.44	1.4811	0.86633
97	12	56	02H	0.69	56.10	89	0.5	0.54	1.4732	0.97015
98	32	148	03H	0.53	68.59	79	0.36	0.56	1.4668	0.89963
99	67	119	01H	-0.1	79.31	93	0.26	0.31	1.4624	0.91644
100	33	117	05H	0.64	46.95	58	0.25	0.42	1.4552	0.61279
101	16	140	02H	0.68	52.12	61	0.62	0.23	1.4524	0.92814
102	52	82	01H	0.52	42.18	64	0.31	0.67	1.4460	0.75253
103	21	109	01H	0.55	66.42	78	0.32	0.52	1.4447	0.87236
104	104	116	01H	0.34	59.29	80	0.2	0.29	1.4364	0.79689
105	45	89	01H	0.64	56.67	65	0.33	0.39	1.4347	0.78153
106	6	116	01H	-0.21	42.64	56	0.4	0.55	1.4326	0.76174
107	75	91	02H	0.11	63.89	85	0.3	0.56	1.4316	0.89925
108	49	19	04H	0.8	55.72	68.5	0.54	0.34	1.4308	0.92674
109	24	24	01H	0.53	38.77	74.5	0.18	0.26	1.4171	0.72352
110	117	89	01H	-0.48	52.58	62.5	0.59	0.42	1.4145	0.92354
111	38	110	01H	0.57	51.90	70	0.36	0.54	1.4107	0.84639
112	53	109	01H	-0.65	45.74	60	0.56	0.57	1.4042	0.90064
113	47	145	02H	0.6	61.02	88	0.39	0.41	1.4036	0.94488
114	12	148	02H	0.18	54.98	78	0.43	0.53	1.4013	0.92509
115	35	33	03H	0.48	80.71	99	0.24	0.18	1.3850	0.93097
116	40	56	03H	0.68	61.88	74	0.59	0.39	1.3846	0.95782

	ROW	COL	TSP	POS	AVG DEP	MAX DEP	Bobbin Volts	LENGTH	MP50	PODAV
117	31	49	01H	0.75	40.81	69	0.22	0.77	1.3676	0.70858
118	7	119	01H	-0.13	52.23	73	0.48	0.29	1.3661	0.92443
119	119	65	04H	0.56	56.07	73	0.24	0.57	1.3582	0.77101
120	3	57	01H	-0.71	40.06	68	0.14	0.59	1.3575	0.59673
121	83	109	01H	0.65	45.98	65	0.64	0.3	1.3511	0.94671
122	102	98	01H	0.4	48.91	77	0.26	0.35	1.3436	0.82334
123	31	125	01H	-0.47	35.89	57	0.41	0.59	1.3432	0.78059
124	46	126	01H	0.6	49.03	62.5	0.25	0.44	1.3401	0.66885
125	45	89	02H	-0.56	50.45	60.5	0.45	0.44	1.3362	0.84135
126	40	116	01H	0.62	53.50	65.5	0.83	0.59	1.3329	0.97857
127	121	113	01H	-0.65	45.24	73	0.75	0.25	1.3315	0.97932
128	89	51	01H	0.05	50.59	61.5	0.59	0.38	1.3302	0.91958
129	23	143	02H	-0.21	42.15	64	0.37	0.8	1.3270	0.80776
130	86	118	01H	0.39	38.84	60.5	0.41	0.52	1.3256	0.81131
131	39	111	01H	0.61	48.30	75	0.51	0.29	1.3249	0.94097
132	24	136	03H	0.21	60.43	83	0.29	0.31	1.3147	0.88355
133	58	106	01H	0.35	43.07	64	0.41	0.55	1.3102	0.83864
134	32	24	01H	0.59	58.84	68.5	0.31	0.28	1.3091	0.79499
135	18	126	01H	0.62	40.18	52	0.48	0.56	1.3059	0.79634
136	83	109	01H	-0.33	47.22	63	0.64	0.45	1.3027	0.94087
137	20	132	02H	-0.07	44.10	51	0.24	0.46	1.2960	0.50564
138	34	52	06H	0.89	41.01	55	0.62	0.43	1.2891	0.90292
139	9	125	01H	0.35	50.99	61	0.27	0.46	1.2821	0.67516
140	27	127	04H	0.62	33.29	50	0.36	0.62	1.2748	0.65128
141	6	138	01H	0.61	43.40	53	0.55	0.28	1.2736	0.85488
142	75	45	02H	-0.38	52.71	61	0.31	0.4	1.2709	0.72110
143	4	150	01H	-0.48	28.90	56	0.26	0.75	1.2692	0.60000
144	5	3	01H	0.61	43.34	52	0.43	0.87	1.2621	0.75103
145	12	30	01H	0.73	44.94	52	0.53	0.44	1.2569	0.83459

Mp Values with Corresponding Bobbin Bolts and POD Revision 1

	ROW	COL	TSP	POS	AVG DEP	MAX DEP	Bobbin Volts	LENGTH	MP50	PODAV
146	55	95	01H	0.69	35.66	60	0.29	0.75	1.2545	0.68716
147	84	112	02H	-0.72	58.54	71	0.44	0.37	1.2530	0.89899
148	44	72	01H	0.07	53.64	95	0.29	0.45	1.2522	0.93518
149	7	113	01H	0.6	65.75	92	0.87	0.33	1.2498	0.99591
150	26	144	01H	-0.3	46.27	58	0.37	0.31	1.2472	0.75230
151	1	137	01H	-0.36	33.71	61	0.44	0.59	1.2452	0.83797
152	27	127	02H	0.51	22.58	34	0.36	0.82	1.2265	0.44032
153	3	141	01H	0.33	42.42	56.5	0.3	0.45	1.2252	0.65741
154	52	82	01H	0.05	31.62	56.5	0.31	0.34	1.2225	0.66957
155	6	140	02H	-0.52	42.86	57	0.22	0.36	1.2186	0.55948
156	61	115	02H	0.55	33.79	45	0.33	0.62	1.2140	0.54771
157	8	128	01H	0.7	41.54	65	0.55	0.52	1.2126	0.91886
158	42	78	01H	-0.72	56.03	68	0.36	0.72	1.2055	0.83180
159	16	116	05H	0.43	32.45	50.5	0.33	0.65	1.2052	0.62003
160	42	142	01H	0.54	49.59	61	0.33	0.41	1.2040	0.74236
161	136	88	01H	0.36	37.79	70	0.33	0.44	1.1976	0.82416
162	6	136	01H	-0.39	48.81	64	0.37	0.38	1.1923	0.80776
163	120	114	03H	0.81	57.03	67	0.56	0.28	1.1835	0.93002
164	123	99	01H	-0.34	31.70	53	0.27	0.59	1.1776	0.57379
165	11	143	01H	-0.15	50.78	69	0.33	0.39	1.1750	0.81619
166	74	66	01H	0.79	39.47	69	0.68	0.65	1.1736	0.96425
167	34	130	02H	0.47	23.67	44	0.44	0.48	1.1686	0.67392
168	7	119	01H	0.14	48.16	67	0.48	0.29	1.1580	0.89819
169	104	100	02H	0.36	66.75	81.5	0.29	0.85	1.1540	0.87500
170	86	104	01H	-0.49	35.29	54	0.37	0.42	1.1535	0.70983
171	10	148	01H	0.8	46.19	56	0.35	0.33	1.1456	0.71003
172	13	57	01H	0.71	40.11	58	0.75	0.39	1.1432	0.95367
173	38	114	02H	-0.11	47.70	63	0.32	0.42	1.1349	0.75257
174	92	100	02H	0.63	48.80	67	0.46	0.68	1.1320	0.88828

	ROW	COL	TSP	POS	AVG DEP	MAX DEP	Bobbin Volts	LENGTH	MP50	PODAV
175	66	28	02H	-0.56	50.50	66	0.27	0.36	1.1275	0.73144
176	9	127	01H	-0.48	24.13	33	0.37	0.36	1.1193	0.44057
177	6	138	01H	0.73	28.68	41.5	0.55	0.4	1.1171	0.76038
178	62	36	03H	0.35	17.96	61	0.34	0.59	1.1136	0.75255
179	5	21	03H	0.15	56.10	72	0.32	0.43	1.1020	0.83181
180	23	143	01H	0.81	30.46	52.5	0.38	0.25	1.0964	0.70409
181	11	135	03H	-0.28	33.88	47	0.22	0.33	1.0764	0.42365
182	4	150	01H	0.68	45.95	66	0.26	0.43	1.0680	0.72053
183	84	116	02H	0.65	33.46	56.5	0.36	0.82	1.0621	0.72637
184	53	109	01H	-0.02	24.88	47	0.56	0.15	1.0478	0.81748
185	57	83	01H	0.46	35.93	53	0.27	0.49	1.0470	0.57379

1448 S. R. 333
Russellville, AR 72802

FAX: 501-858-4685

ARKANSAS NUCLEAR ONE
ENTERGY OPERATIONS

Fax

To: Tom Alexion From: Dale James

Fax: Pages:

Phone: Date:

Re: CC:

☒ Urgent ☐ For Review ☐ Please Comment ☐ Please Reply ☐ Please Recycle

• Comments:

Requested Info on growth rate distribution & bi-variant PoD

Description of the Growth Rate Distribution Curves Used In the ANO2 Steam Generator Operation Assessment

An extensive growth rate evaluation was performed following the 2P99 mid-cycle outage. Indications confirmed by MRPC were evaluated in the previous mid-cycle outage (2P98) to evaluate growth over a full operating interval. The results were consistent with those developed in prior years as well as with industry data. The main purpose of this document is to identify the amount of variance that is contained in the distributions of growth used in the model. This particular operational assessment (OA) utilized a probabilistic approach to determining the growth rate of a flaw in a simulation. Listed below is a histogram of the apparent growth. The large amount of negative growth is symptomatic of eddy current (EC) uncertainties mixed with actual physical growth.

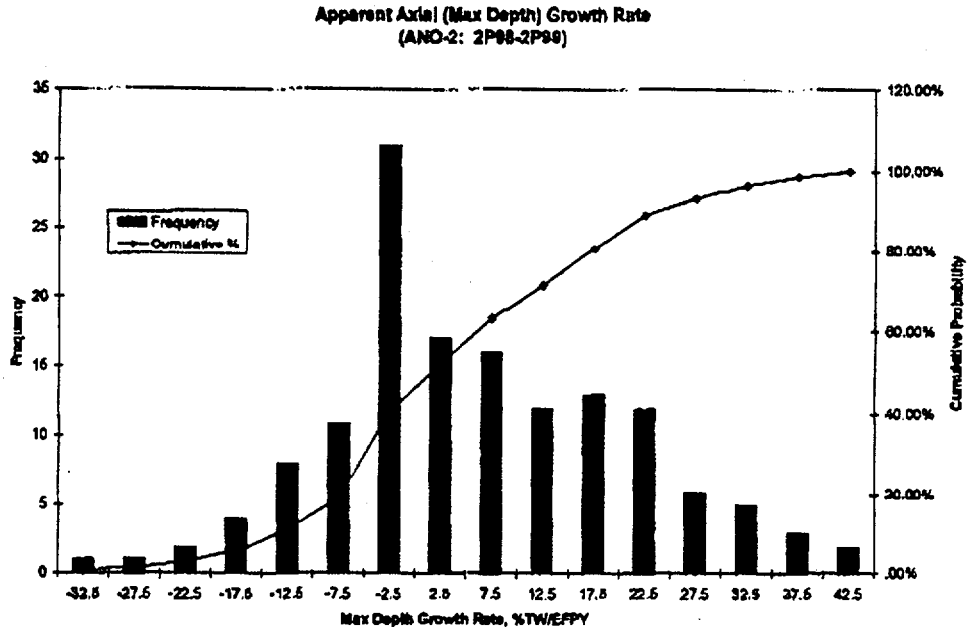

Pulled tube data was evaluated to determine the amount of uncertainty associated with sizing by EC. Once this was applied it was evident that the actual growth was being masked by the uncertainties. A statistical optimization process was performed to determine the true growth. This was then used to develop the growth rate curves used in the model.

In an attempt to graphically display the variance in the distributions the following figures were developed:

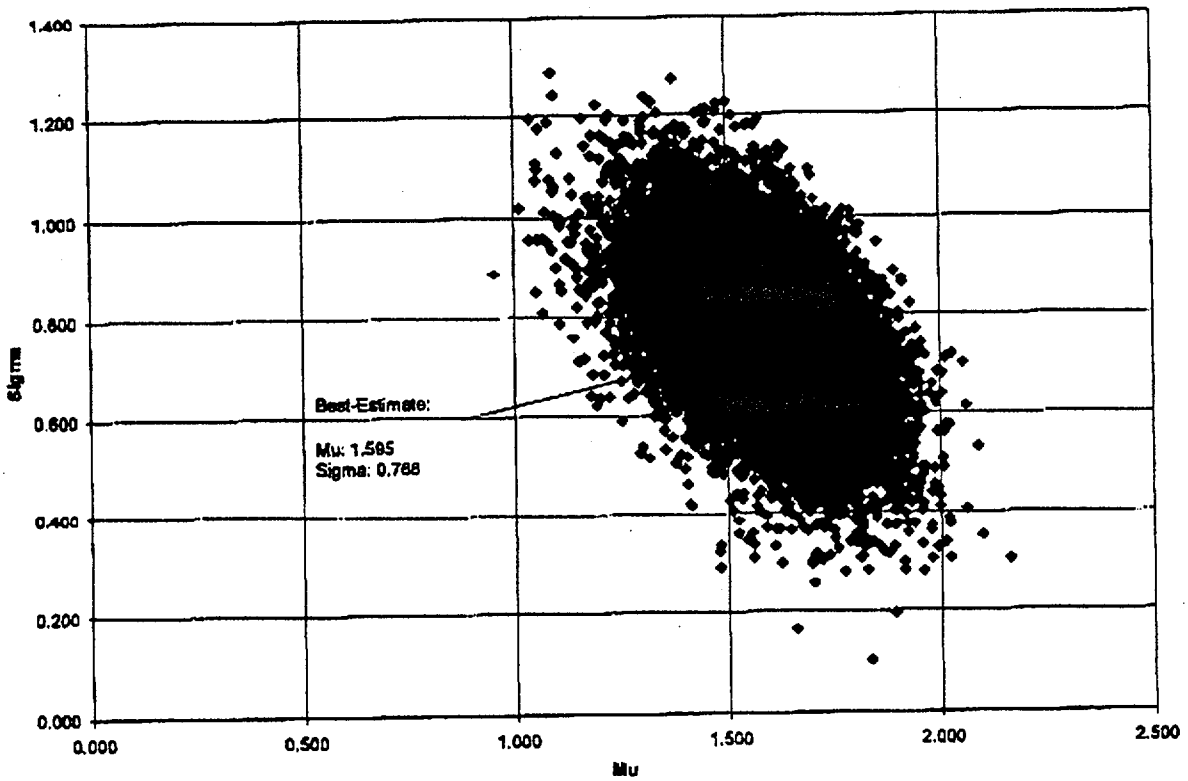

This scatter plot represents the variables associated with each distribution curve. The arrow points to the best estimate value.

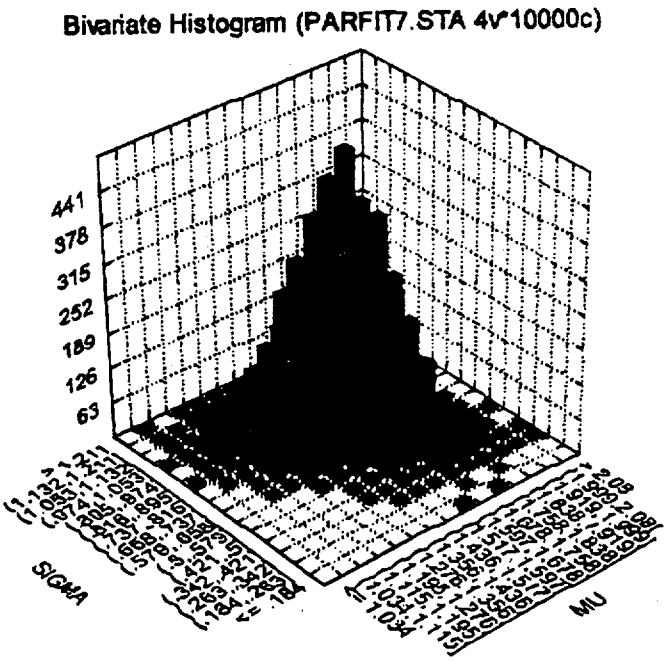

This three-dimensional histogram is another way to graphically display the various distributions. Once again the data is plotted using the two variables that describe the individual curves (sigma and mu).

Finally, listed below are three bounding curves that are based on 10000 converged iterations. This represents the following estimates in an effort to bound the distributions:

- Least Limiting
- Best estimate
- Most Limiting

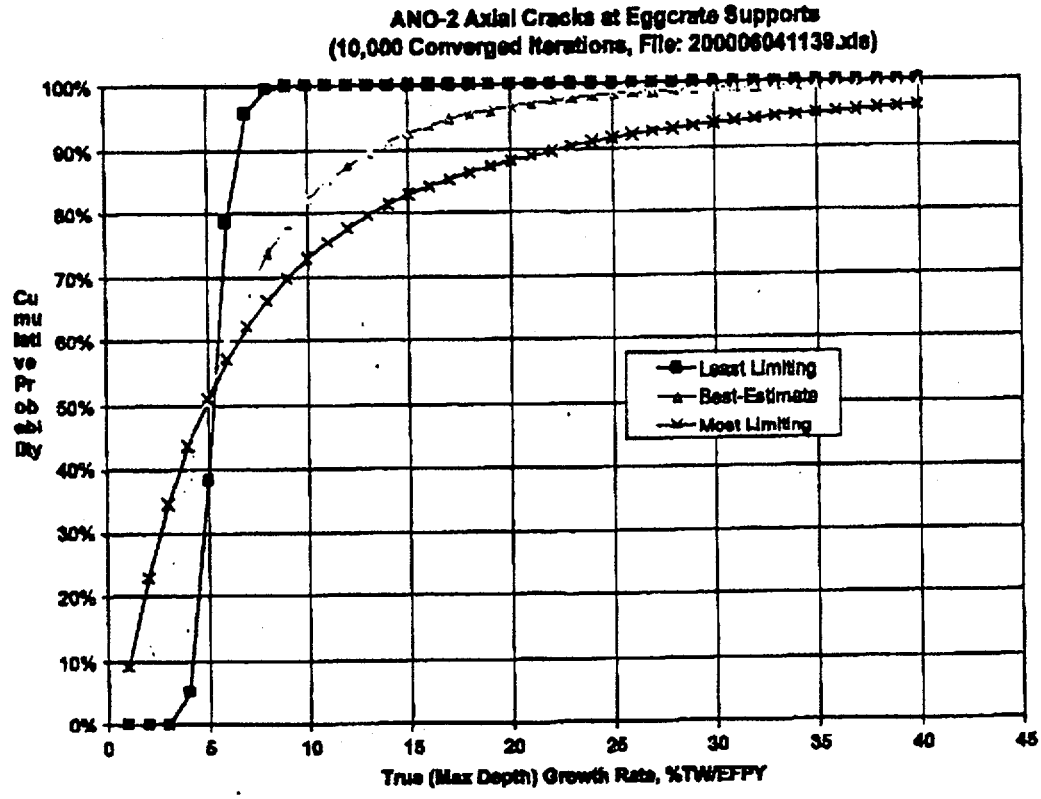

Previous to this process, the bobbin phase angle was used to estimate the change in growth. The values used for growth were based on a mean of ~ 7 %TW /EFPY with a maximum value of 40 %TW/EFPY. This data is consistent with other CE plants. This is listed in the graph below:

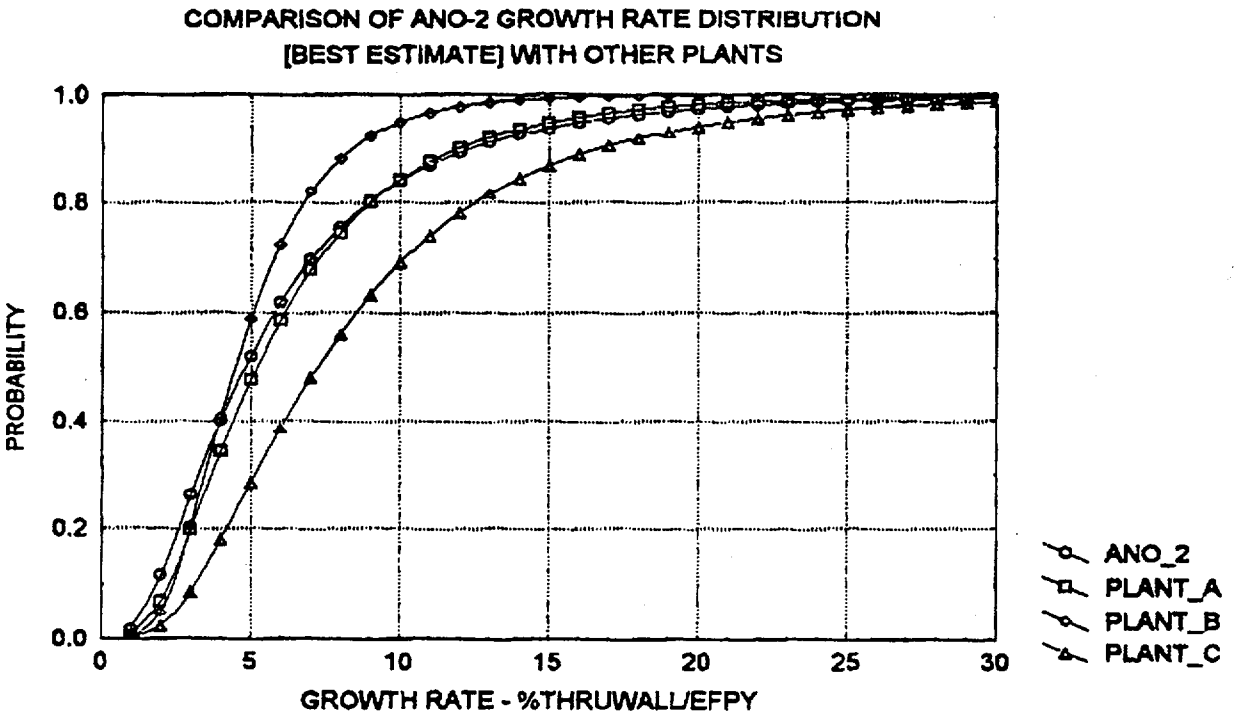
COMPARISON OF ANO-2 GROWTH RATE DISTRIBUTION
[BEST ESTIMATE] WITH OTHER PLANTS
PROBABILITY
1.0
0.8
0.6
0.4
0.2
0.0
0
5
10
15
20
25
30
GROWTH RATE - %THRUWALL/EFPY
ANO_2
PLANT_A
PLANT_B
PLANT_C

Description of the Bi-Variant Probability of Detection Curves Used in the ANO2 Operational Assessment June 5, 2000

Following the 2P99 mid-cycle outage, a probabilistic operational assessment was performed to provide input into a risk evaluation. Historically, a probability of detection (POD) curve was used based on peak depth. This had provided the necessary information based on detection of flaws with bobbin. An extensive test program was performed using pulled tubes and ANO2 specific data. Five teams of analysts were used and five separate curves were developed. This was presented to the Staff following 2R13. During the 2P99 outage however, different calibration standards were used. These standards produced signals with higher amplitudes than the previous standards. A study performed during 2P99 on approximately 30 flaws confirmed the new standards gave significantly larger amplitude signals for the same indication.

Figure 1

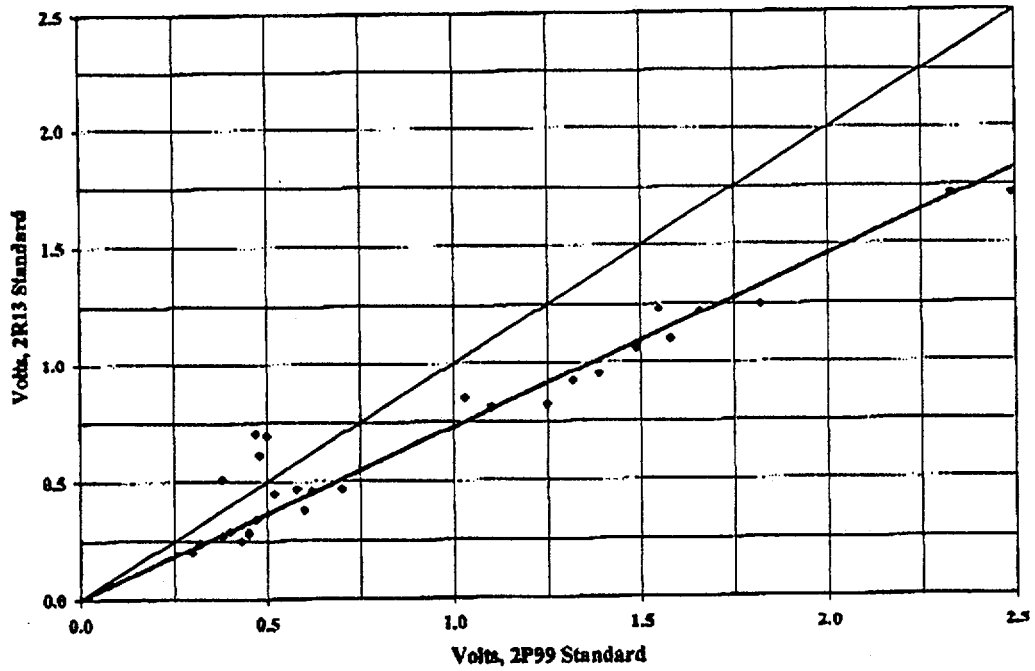

This resulted in a significant increase in the number of indications identified in 2P99. This is demonstrated in Figure 2:

Figure 2

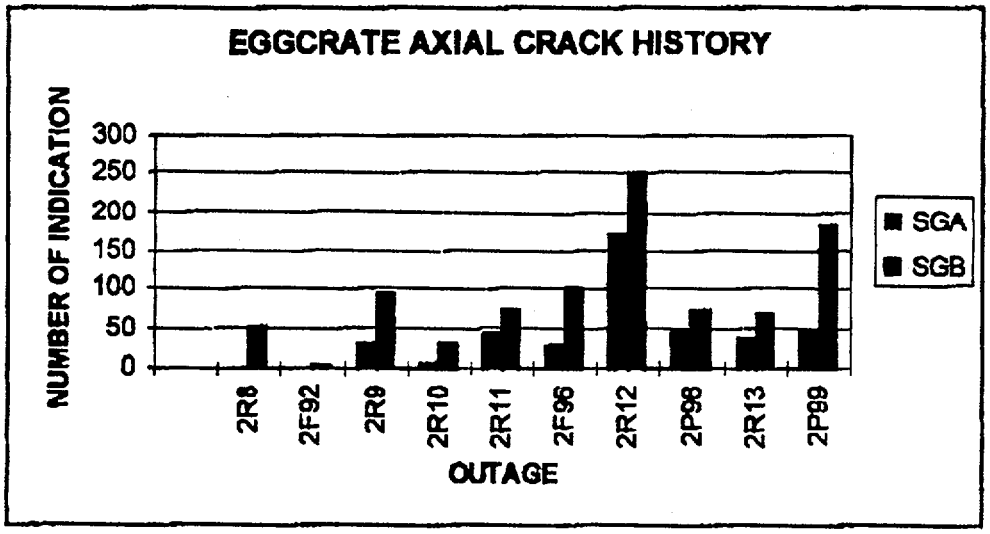

This inspection transient can be explained by a change in equipment and training. Special emphasis was placed on the identification of low amplitude flaws and their corresponding signal response. There were no other adverse changes made during the most recent operating periods. Therefore, a new POD function was developed to take into account this improvement to the process. Since the improvement was due to a change in voltage, a bi-variant curve was developed using both peak depth and voltage. The data from the five teams of analysts from the SSPD was used with the following equation:

$$POD=1.0/(1.0+EXP(A+B*DEPTH+C*VOLTS))$$

TEAM	A	B	C
1	4.254	-0.0473	-6.475
2	3.943	-0.0635	-4.407
3	4.044	-0.0565	-3.976
4	4.264	-0.0566	-6.351
5	4.388	-0.0546	-8.069

Using this bi-variant function creates a method by which both parameters are considered when determining the probability of detection. Attached are graphics for each analyst teams that were developed from the SSPD. Each is a family of POD verses peak depth curves for signal voltages from 0.1 to 1.0 volts.

Attachment 1

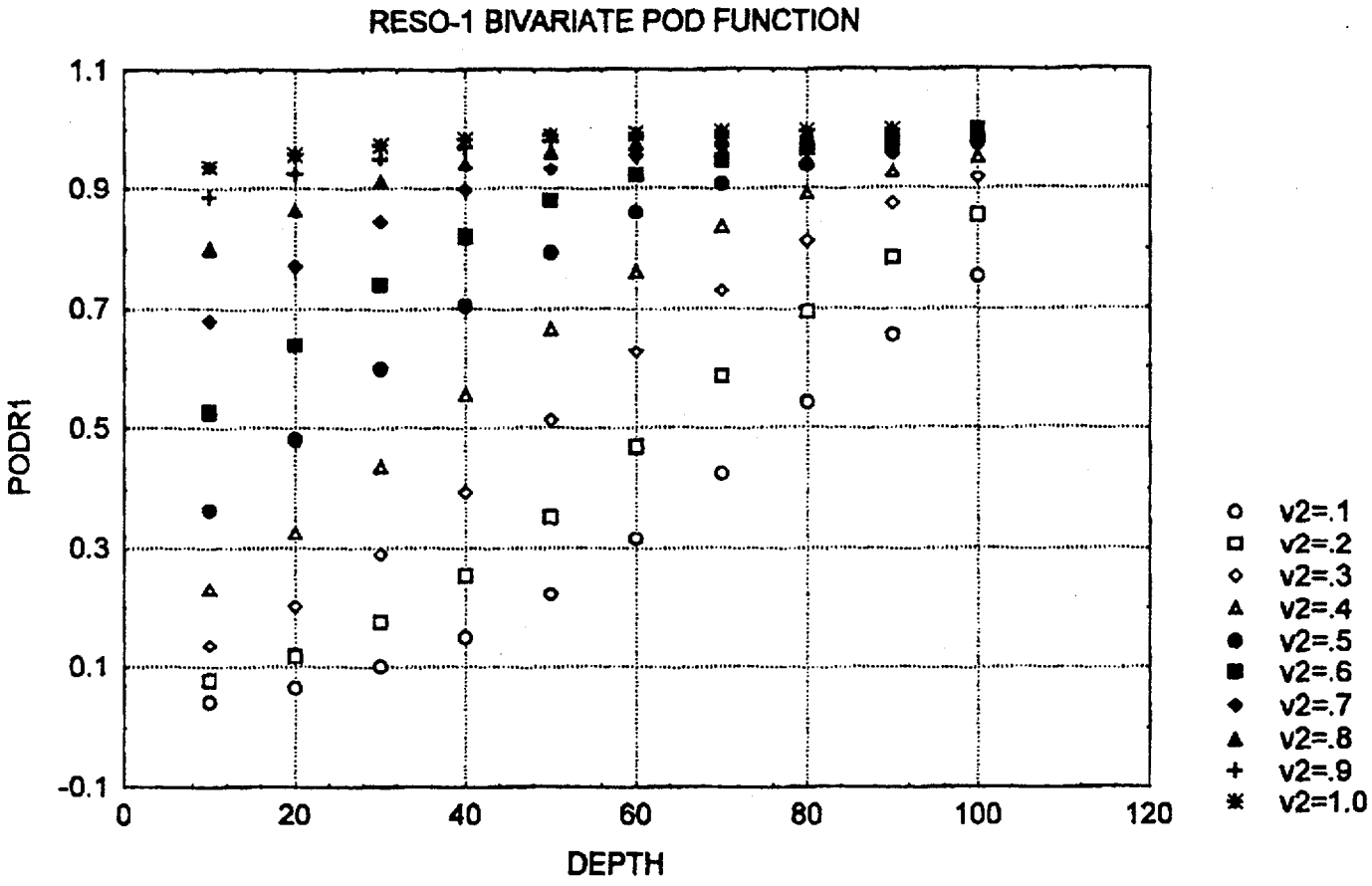

Team 1 Results

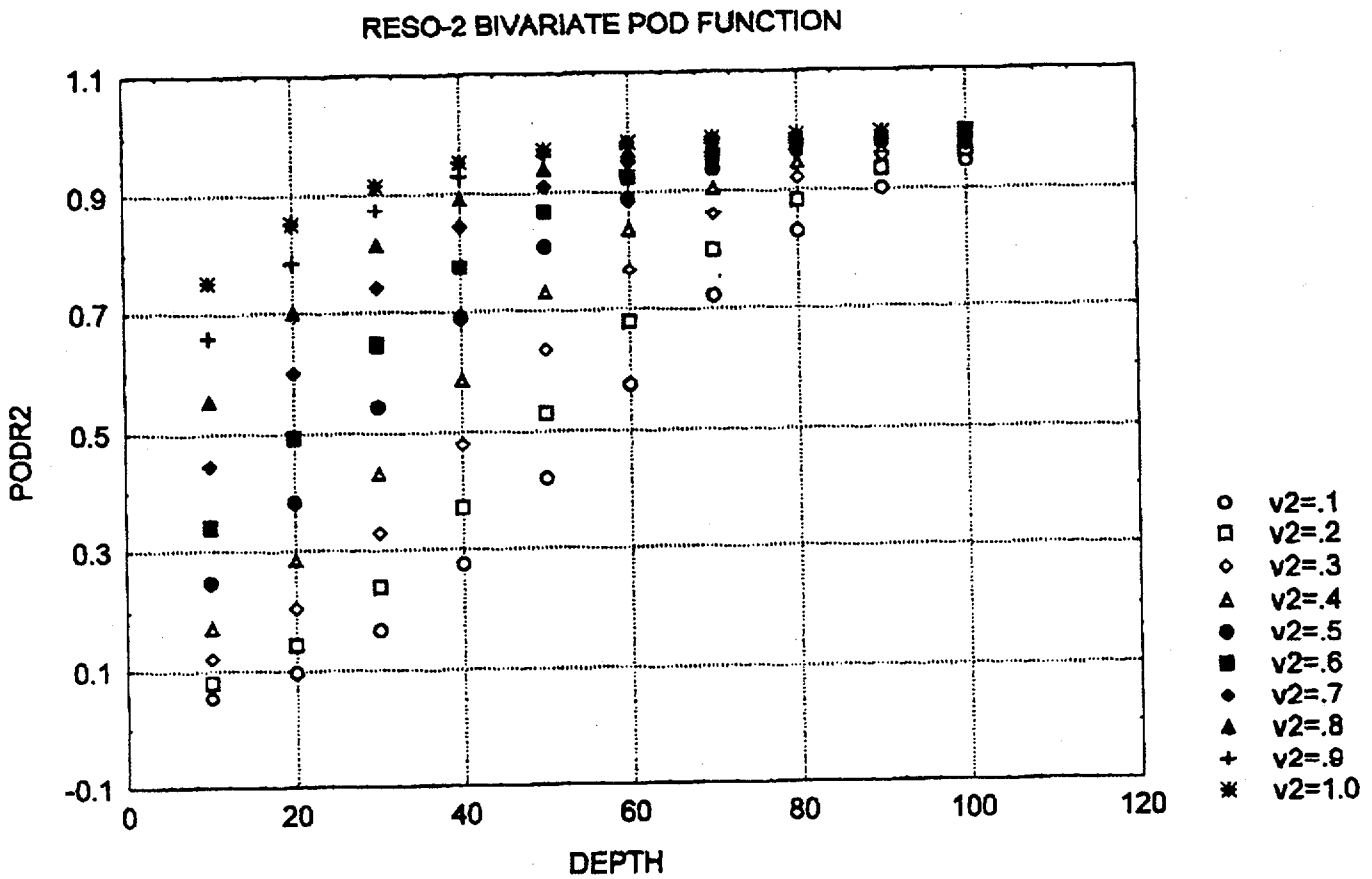

Team 2 Results

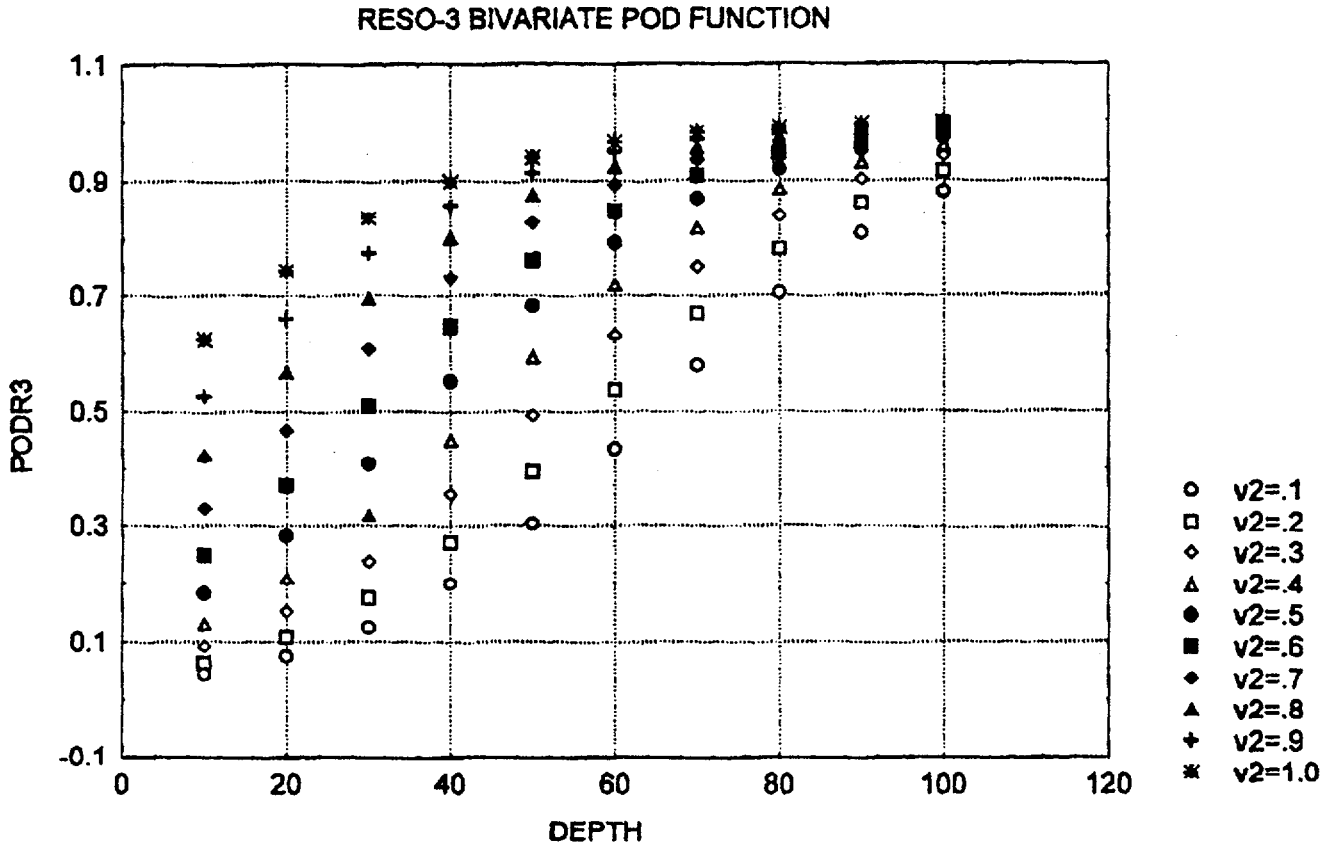

Team 3 Results

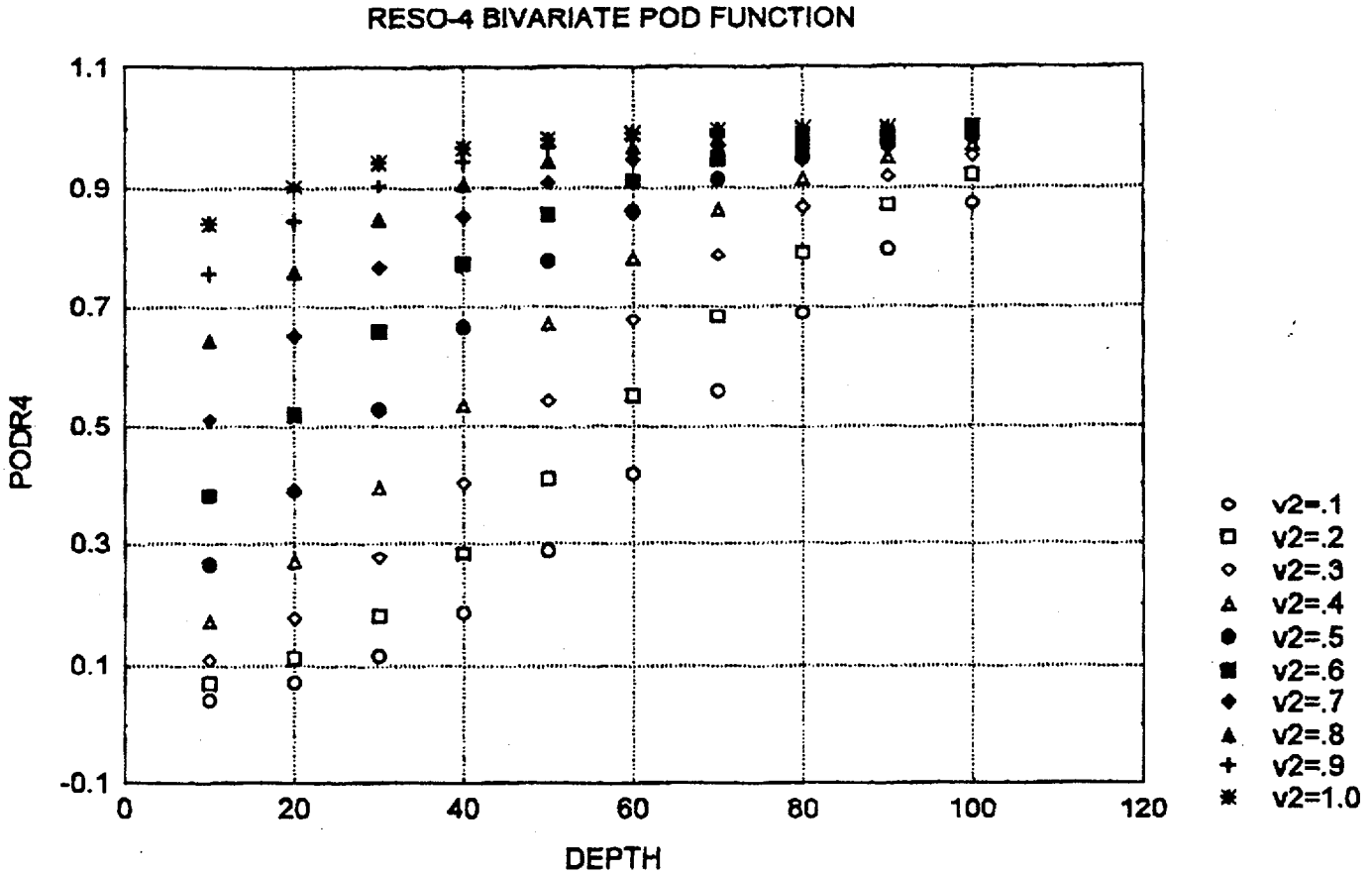

Team 4 Results

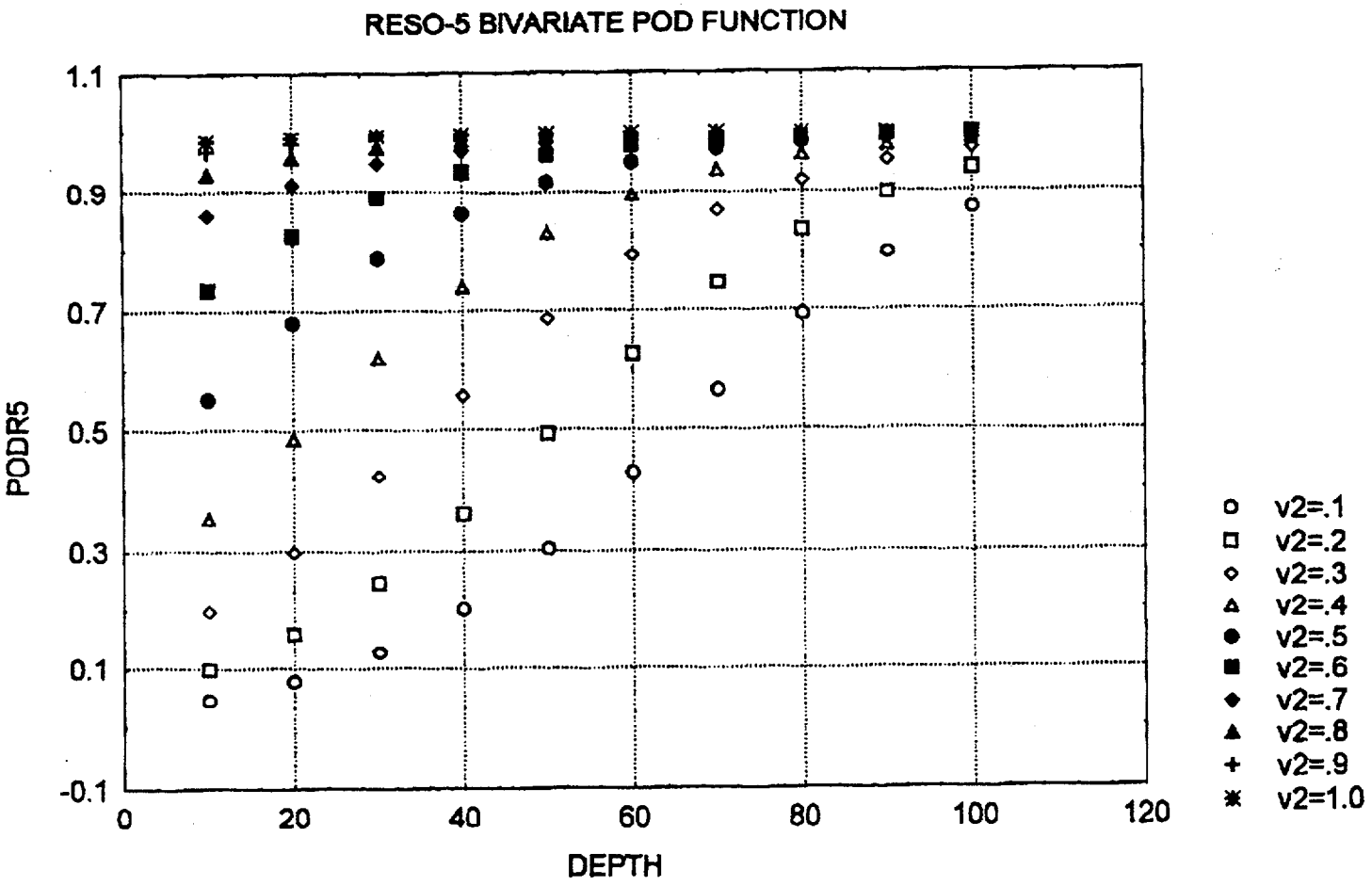

Team 5 Results

1448 S. R. 333
Russellville, AR 72802

FAX: 501-858-4885

ARKANSAS NUCLEAR ONE
ENTERGY OPERATIONS

Fax

To: Tom Alexion **From:** John Dosa

Fax: **Pages:** 9

Phone: **Date:** 6/3/00

Re: **CC:**

☐ Urgent ☐ For Review ☐ Please Comment ☐ Please Reply ☐ Please Recycle

• **Comments:**
POD and Voltage added

Additional Mp Data for ANO2

The attached table of data is being provided at your request. The following is an explanation of the data:

1. Uses the 185 indications identified in 2P99 by individual flaws.

2. The bobbin volts are based on the mix channel response.

3. The Mp data is the median value.

4. The POD is the average of the 5 curves using both maximum depth and bobbin voltage as inputs.

5. Maximum depth is based on the RPC profile data

6. Length is based on the RPC raw data measurement.

The following are descriptions of the titles:

ROW	Tube Row
COL	Tube Column
TSP	Tube Support Plate
POS	Tube Position
AVG DEP	Average Depth
MAX DEP	Maximum Depth
Bobbin Volts	Bobbin Volts
LENGTH	Length
MP50	Mp (median value)
PODAV	Average POD Value

Median Mp Values with Corresponding Voltage and POD for ANO2

	ROW	COL	TSP	POS	AVG DEP	MAX DEP	Bobbin Volts	LENGTH	MP50	PODAV
1	102	110	02H	0.06	82.66	99	0.68	1.55	4.51	0.99300
2	48	96	01H	-0.12	53.30	67	0.41	0.96	4.41	0.85945
3	23	55	02H	0.29	63.74	79	0.3	1.39	4.30	0.86605
4	28	36	02H	0.35	62.52	90	0.34	0.49	3.82	0.93567
5	72	72	02H	0.27	80.95	92	0.99	1.34	3.65	0.99767
6	36	36	02H	0.33	62.88	73	0.42	1.03	3.55	0.89927
7	1	51	04H	0.49	71.94	86	0.6	0.95	3.37	0.97883
8	23	143	02H	-0.21	42.15	64	0.37	0.8	3.36	0.80776
9	37	95	01H	-0.55	56.73	72	0.51	0.99	3.36	0.93118
10	10	16	02H	0.38	55.83	74	0.49	0.94	3.35	0.93155
11	47	93	01H	-0.6	57.64	70	0.29	0.76	3.13	0.78587
12	28	44	01H	-0.01	51.47	93	0.69	1.58	3.10	0.99074
13	13	31	02H	-0.05	56.73	90	0.6	0.85	3.08	0.98294
14	36	116	01H	0.62	63.02	75	0.7	0.39	3.07	0.97646
15	12	106	01H	0.61	54.73	65	0.39	0.78	3.03	0.83150
16	17	49	06H	0.58	74.39	87	0.44	0.77	2.95	0.95502
17	32	108	01H	0.19	64.82	83	1.49	0.49	2.94	0.99957
18	47	91	01H	0.49	67.57	79	1.1	0.91	2.92	0.99707
19	33	109	01H	-0.41	61.34	68	0.32	0.81	2.92	0.79940
20	9	115	01H	0.49	70.92	96	0.43	0.78	2.91	0.97040
21	1	51	03H	0.58	56.91	69	0.63	0.62	2.88	0.95469
22	65	119	01H	-0.57	45.86	68	0.3	0.53	2.87	0.78140
23	16	118	01H	0.49	54.41	69	0.35	0.81	2.86	0.83184
24	102	98	02H	0.24	79.61	94	0.23	0.6	2.83	0.90719
25	106	90	02H	-0.24	62.79	92	0.41	0.61	2.81	0.95953
26	12	62	01H	0.3	51.19	69	0.37	0.44	2.81	0.84633
27	47	93	01H	-0.31	52.57	65	0.29	0.97	2.81	0.74218
28	4	156	02H	0.72	59.06	70	0.41	0.5	2.75	0.87798

Median Mp Values with Corresponding Voltage and POD for ANO2

	ROW	COL	TSP	POS	AVG DEP	MAX DEP	Bobbin Volts	LENGTH	MP50	PODAV
29	52	82	01H	0.52	42.18	64	0.31	0.67	2.75	0.75253
30	60	108	01H	0.13	52.86	62	0.41	1.14	2.75	0.82343
31	23	143	01H	-0.33	34.03	47	0.38	0.27	2.73	0.63873
32	60	44	02H	0.43	54.26	72	0.25	0.9	2.69	0.77126
33	16	140	03H	0.46	66.39	76	0.89	0.72	2.69	0.99092
34	12	106	01H	-0.39	51.75	63	0.47	0.85	2.67	0.87078
35	52	36	01H	0.58	54.22	73	0.32	0.75	2.67	0.83922
36	4	150	01H	-0.48	28.90	56	0.26	0.75	2.63	0.60000
37	36	116	01H	0.62	54.60	67	0.7	0.78	2.63	0.96380
38	53	83	01H	0.1	78.23	98	0.71	0.64	2.59	0.99363
39	27	127	02H	0.51	22.58	34	0.36	0.82	2.59	0.44032
40	33	71	01H	-0.53	64.38	91	0.34	0.42	2.58	0.93884
41	58	106	01H	-0.52	64.01	91	0.41	0.55	2.52	0.95737
42	38	110	01H	0.57	51.90	70	0.36	0.54	2.47	0.84639
43	4	20	01H	-0.11	59.06	69	1.55	0.71	2.45	0.99926
44	65	97	02H	-0.5	55.51	69	0.55	0.58	2.38	0.93375
45	14	112	04H	0.56	47.13	67	0.22	0.59	2.37	0.68584
46	7	61	02H	0.62	59.73	96	0.37	0.46	2.36	0.95947
47	77	113	01H	0.39	60.17	79	0.71	0.56	2.36	0.98195
48	3	57	01H	-0.71	40.06	68	0.14	0.59	2.34	0.59673
49	13	55	01H	0.12	51.43	68	0.87	0.59	2.34	0.98447
50	8	148	01H	0.6	54.82	72	0.49	0.65	2.31	0.92425
51	4	28	01H	-0.46	51.26	64	0.67	0.72	2.30	0.95118
52	26	40	02H	0.63	75.14	92	0.19	0.64	2.30	0.87526
53	16	140	02H	0.68	52.12	61	0.62	0.23	2.29	0.92814
54	6	116	01H	-0.21	42.64	56	0.4	0.55	2.28	0.76174
55	42	38	01H	0.52	51.38	72	0.41	0.39	2.28	0.88913
56	32	108	01H	-0.18	65.06	81	1.66	0.55	2.27	0.99977
57	33	71	01H	0.46	70.58	82	0.34	0.69	2.25	0.90435

Median Mp Values with Corresponding Voltage and POD for ANO2

	ROW	COL	TSP	POS	AVG DEP	MAX DEP	Bobbin Volts	LENGTH	MP50	PODAV
58	32	46	02H	0.7	68.32	82	0.82	0.62	2.21	0.99096
59	24	24	01H	0.53	38.77	75	0.18	0.26	2.21	0.72352
60	31	49	01H	0.75	40.81	69	0.22	0.77	2.20	0.70858
61	8	134	01H	0.48	90.09	100	2.49	0.56	2.16	1.00000
62	68	44	03H	0.54	56.22	85	0.19	0.98	2.16	0.82881
63	33	117	05H	0.64	46.95	58	0.25	0.42	2.15	0.61279
64	68	112	02H	-0.03	58.36	69	0.55	0.69	2.11	0.93375
65	40	116	01H	0.62	53.50	66	0.83	0.59	2.08	0.97857
66	60	108	01H	0.63	57.33	67	0.41	1.08	2.07	0.85945
67	86	118	01H	0.39	38.84	61	0.41	0.52	2.07	0.81131
68	34	130	02H	0.47	23.67	44	0.44	0.48	2.06	0.67392
69	38	110	01H	0.69	44.81	73	0.36	0.89	2.05	0.86632
70	20	52	01H	0.75	62.59	79	0.53	0.51	2.05	0.95652
71	48	52	01H	0.66	72.17	84	0.49	0.51	2.03	0.95916
72	77	125	02H	0.36	62.31	89	0.3	0.82	1.99	0.91709
73	89	73	02H	0.55	52.38	74	0.24	0.67	1.99	0.78035
74	18	126	01H	0.62	40.18	52	0.48	0.56	1.99	0.79634
75	53	109	01H	-0.65	45.74	60	0.56	0.57	1.98	0.90064
76	1	137	01H	-0.36	33.71	61	0.44	0.59	1.95	0.83797
77	31	125	01H	-0.47	35.89	57	0.41	0.59	1.93	0.78059
78	27	127	04H	0.62	33.29	50	0.36	0.62	1.93	0.65128
79	32	108	01H	-0.61	57.71	98	1.66	0.68	1.92	0.99991
80	95	45	02H	0.64	63.85	86	0.43	0.43	1.92	0.95017
81	115	65	02H	0.4	54.06	66	0.55	0.41	1.91	0.92284
82	58	106	01H	0.35	43.07	64	0.41	0.55	1.90	0.83864
83	62	36	03H	0.35	17.96	61	0.34	0.59	1.89	0.75255
84	9	115	01H	-0.66	68.15	88	0.43	0.49	1.89	0.95506
85	55	95	01H	0.69	35.66	60	0.29	0.75	1.88	0.68716
86	34	52	06H	0.89	41.01	55	0.62	0.43	1.87	0.90292

Median Mp Values with Corresponding Voltage and POD for ANO2

	ROW	COL	TSP	POS	AVG DEP	MAX DEP	Bobbin Volts	LENGTH	MP50	PODAV
87	10	150	01H	0.66	55.20	69	0.66	0.46	1.86	0.96070
88	52	82	01H	0.05	31.62	57	0.31	0.34	1.86	0.66957
89	10	150	03H	0.37	78.14	97	1.32	0.59	1.86	0.99961
90	48	52	01H	0.72	59.18	72	0.49	0.66	1.85	0.92232
91	75	85	03H	0.56	57.52	69	0.49	0.67	1.83	0.91198
92	84	112	02H	-0.72	58.54	71	0.44	0.37	1.83	0.89899
93	28	36	02H	-0.19	53.76	75	0.34	0.44	1.81	0.86633
94	84	76	01H	0.63	72.09	91	0.48	0.49	1.81	0.97026
95	12	56	02H	0.69	56.10	89	0.5	0.54	1.81	0.97015
96	61	115	02H	0.55	33.79	45	0.33	0.62	1.79	0.54771
97	67	111	01H	-0.48	56.96	73	0.52	0.59	1.78	0.93768
98	11	155	02H	0.76	60.39	79	0.58	0.4	1.77	0.96800
99	29	123	04H	0.52	69.31	77	0.39	0.84	1.77	0.90433
100	9	127	01H	0.75	67.60	84	0.37	0.39	1.74	0.92534
101	65	125	02H	-0.71	63.46	72	0.52	0.46	1.73	0.93441
102	63	115	01H	0.05	66.35	78	0.44	0.64	1.72	0.92868
103	83	109	01H	-0.33	47.22	63	0.64	0.45	1.72	0.94087
104	83	109	01H	0.65	45.98	65	0.64	0.3	1.71	0.94671
105	77	83	02H	-0.33	68.27	85	0.22	0.38	1.70	0.85132
106	117	89	01H	-0.48	52.58	63	0.59	0.42	1.70	0.92354
107	123	99	01H	-0.34	31.70	53	0.27	0.59	1.70	0.57379
108	16	116	05H	0.43	32.45	51	0.33	0.65	1.68	0.62003
109	16	140	03H	-0.39	57.05	69	0.89	0.71	1.65	0.98660
110	12	148	02H	0.18	54.98	78	0.43	0.53	1.63	0.92509
111	102	98	01H	0.4	48.91	77	0.26	0.35	1.63	0.82334
112	20	132	02H	-0.07	44.10	51	0.24	0.46	1.63	0.50564
113	4	156	02H	-0.44	65.18	82	0.41	0.83	1.62	0.93240
114	6	138	01H	0.61	43.40	53	0.55	0.28	1.62	0.85488
115	45	89	01H	0.64	56.67	65	0.33	0.39	1.62	0.78153

Median Mp Values with Corresponding Voltage and POD for ANO2

	ROW	COL	TSP	POS	AVG DEP	MAX DEP	Bobbin Volts	LENGTH	MP50	PODAV
116	121	113	01H	-0.65	45.24	73	0.75	0.25	1.62	0.97932
117	46	126	01H	0.6	49.03	63	0.25	0.44	1.61	0.66885
118	67	57	01H	0.79	75.65	85	0.66	0.43	1.61	0.98339
119	36	116	01H	0.17	61.93	81	0.7	0.72	1.60	0.98301
120	2	34	02H	0.1	60.78	86	0.2	0.94	1.59	0.84374
121	89	51	01H	0.05	50.59	62	0.59	0.38	1.59	0.91958
122	7	119	01H	-0.13	52.23	73	0.48	0.29	1.58	0.92443
123	5	3	01H	0.61	43.34	52	0.43	0.87	1.57	0.75103
124	49	19	04H	0.8	55.72	69	0.54	0.34	1.56	0.92874
125	104	116	01H	0.34	59.29	80	0.2	0.29	1.53	0.79689
126	45	69	02H	-0.56	50.45	61	0.45	0.44	1.52	0.84135
127	9	127	01H	-0.48	24.13	33	0.37	0.36	1.51	0.44057
128	39	111	01H	0.61	48.30	75	0.51	0.29	1.51	0.94097
129	12	30	01H	0.73	44.94	52	0.53	0.44	1.50	0.83459
130	32	100	01H	0.16	73.49	97	1.82	0.52	1.50	0.99995
131	136	88	01H	0.36	37.79	70	0.33	0.44	1.49	0.82416
132	6	140	02H	-0.52	42.86	57	0.22	0.36	1.48	0.55948
133	8	128	01H	0.7	41.54	65	0.55	0.52	1.48	0.91886
134	106	90	02H	0.54	67.85	92	0.41	0.71	1.48	0.95846
135	42	38	01H	0.04	80.03	92	0.41	0.7	1.48	0.95953
136	11	13	03H	0.13	65.54	82	0.24	0.54	1.47	0.84505
137	119	65	04H	0.56	56.07	73	0.24	0.57	1.47	0.77101
138	104	116	01H	-0.58	68.75	83	0.2	0.23	1.47	0.82154
139	26	144	01H	-0.3	46.27	58	0.37	0.31	1.46	0.75230
140	47	145	02H	0.6	61.02	88	0.39	0.41	1.46	0.94488
141	3	141	01H	0.33	42.42	57	0.3	0.45	1.45	0.65741
142	75	91	02H	0.11	63.89	85	0.3	0.56	1.45	0.89925
143	10	150	01H	0.41	75.57	86	0.66	0.38	1.45	0.98384
144	5	153	07H	0.37	89.07	97	0.62	0.59	1.45	0.98944

Median Mp Values with Corresponding Voltage and POD for ANO2

	ROW	COL	TSP	POS	AVG DEP	MAX DEP	Bobbin Volts	LENGTH	MP50	PODAV
145	92	102	02H	0.62	68.08	81	0.24	0.35	1.45	0.83792
146	74	66	01H	0.79	39.47	69	0.68	0.65	1.44	0.96425
147	86	104	01H	-0.49	35.29	54	0.37	0.42	1.43	0.70983
148	32	24	01H	0.59	58.84	69	0.31	0.28	1.42	0.79499
149	9	125	01H	0.35	50.99	61	0.27	0.46	1.41	0.67516
150	32	148	03H	0.53	68.59	79	0.36	0.56	1.41	0.89963
151	40	116	01H	0.53	57.66	84	0.83	0.46	1.41	0.99228
152	21	109	01H	0.55	66.42	78	0.32	0.52	1.40	0.87236
153	38	144	03H	-0.59	72.77	85	0.3	0.36	1.40	0.89925
154	6	138	01H	0.73	28.68	42	0.55	0.4	1.38	0.76038
155	40	56	03H	0.68	61.88	74	0.59	0.39	1.37	0.95782
156	75	89	02H	0.75	77.66	92	0.77	0.49	1.36	0.99339
157	75	45	02H	-0.38	52.71	61	0.31	0.4	1.36	0.72110
158	24	136	03H	0.21	60.43	83	0.29	0.31	1.35	0.88355
159	6	136	01H	-0.39	48.81	64	0.37	0.38	1.34	0.80776
160	42	142	01H	0.54	49.59	61	0.33	0.41	1.34	0.74236
161	44	72	01H	0.07	53.64	95	0.29	0.45	1.33	0.93518
162	84	112	02H	0.51	59.16	98	0.44	0.79	1.33	0.97472
163	49	77	01H	0.78	85.14	98	0.52	0.39	1.33	0.98288
164	63	123	02H	0.4	81.83	93	0.31	0.59	1.33	0.93542
165	11	143	01H	0.69	79.25	87	0.33	0.33	1.32	0.91940
166	23	143	01H	0.81	30.46	53	0.38	0.25	1.30	0.70409
167	13	57	01H	0.71	40.11	58	0.75	0.39	1.30	0.95367
168	11	143	01H	-0.15	50.78	69	0.33	0.39	1.27	0.81619
169	42	78	01H	-0.72	56.03	68	0.36	0.72	1.26	0.83180
170	35	33	03H	0.48	80.71	99	0.24	0.18	1.26	0.93097
171	67	119	01H	-0.1	79.31	93	0.26	0.31	1.25	0.91644
172	7	119	01H	0.14	48.16	67	0.48	0.29	1.24	0.89819
173	10	148	01H	0.8	46.19	56	0.35	0.33	1.24	0.71003

Median Mp Values with Corresponding Voltage and POD for ANO2

	ROW	COL	TSP	POS	AVG DEP	MAX DEP	Bobbin Volts	LENGTH	MP50	PODAV
174	7	113	01H	0.6	65.75	92	0.87	0.33	1.23	0.99591
175	38	114	02H	-0.11	47.70	63	0.32	0.42	1.22	0.75257
176	120	114	03H	0.81	57.03	67	0.56	0.28	1.22	0.93002
177	92	100	02H	0.63	48.80	67	0.46	0.68	1.20	0.88828
178	11	135	03H	-0.28	33.88	47	0.22	0.33	1.18	0.42365
179	53	109	01H	-0.02	24.88	47	0.56	0.15	1.18	0.81748
180	66	28	02H	-0.56	50.50	66	0.27	0.36	1.18	0.73144
181	84	116	02H	0.65	33.46	57	0.36	0.82	1.15	0.72637
182	104	100	02H	0.36	66.75	82	0.29	0.85	1.13	0.87500
183	4	150	01H	0.68	45.95	66	0.26	0.43	1.11	0.72053
184	5	21	03H	0.15	56.10	72	0.32	0.43	1.11	0.83181
185	57	83	01H	0.46	35.93	53	0.27	0.49	1.11	0.57379

JUN-03-00 14:54 From:ANO GSB 1

1448 S. R. 333
Russellville, AR 72802

FAX: 501-858-4685

ARKANSAS NUCLEAR ONE
ENTERGY OPERATIONS

Fax

To: Tom Alexion	From: John Dosa
Fax:	Pages: 9
Phone:	Date: 5/31/00
Re:	CC:

☐ Urgent ☐ For Review ☐ Please Comment ☐ Please Reply ☐ Please Recycle

● Comments:

Revised Mps

Mp Values Based on Best Estimate Calculations
For ANO2

The attached sheets (CASES 1-3) are a listing of the Mp calculations based on the best estimate conditions for the ANO2 steam generators. The analysis is based on the following inputs to the model:

1. Probabilistic growth rate as determined from the ANO2 data randomly assigned to the value.

2. Conservative depth measurements based on profiling the 2P99 data set per the Westinghouse methodology.

3. Using a POD based on a site specific performance demonstration using pulled tube data and an improved POD beginning in 2P99. The improved POD reflects the use of a new calibration standard, which results in improved flaw detection.

4. Using the following operational runtimes:

	Actual	Temperature Corrected
2R13 to 2P99	0.69	0.72
2P99 to 2P00 (June 15)	0.54	0.56
2P99 to 2R14 (Sept. 15)	0.80	0.83

Case 1 is the beginning of cycle for conditions for cycle 14

Case 2 is based on operating from 2P99 to the proposed tri-cycle 2P00 (June 15th)

Case 3 is based on operating from 2P99 to the proposed refueling outage 2R14 (June 15th)

Both the tabulated data as well as a graphic is attached for each case.

5. The following are outputs from the operational assessment:

	2R13	2P99	2P00	2R14
# Of intersections with detected flaws	69	154	56	
# of undetected flaws	72	82		
# of initiated flaws	112	87	42	

The number of initiated flaws is based on 156 per EFPY.

The above numbers are based on intersections. This is because the bobbin coil is used for detection and can typically identify only one flaw per intersection. The total number of flaws in 2P99 was 185 in 154 intersections. The 185 were determined from RPC analysis of each intersection.

The tables are categorized by the Mp and CDF values in ascending order. The following is an index of the titles:

Mp Tearing Modulus

CDF Cumulative Distribution Function

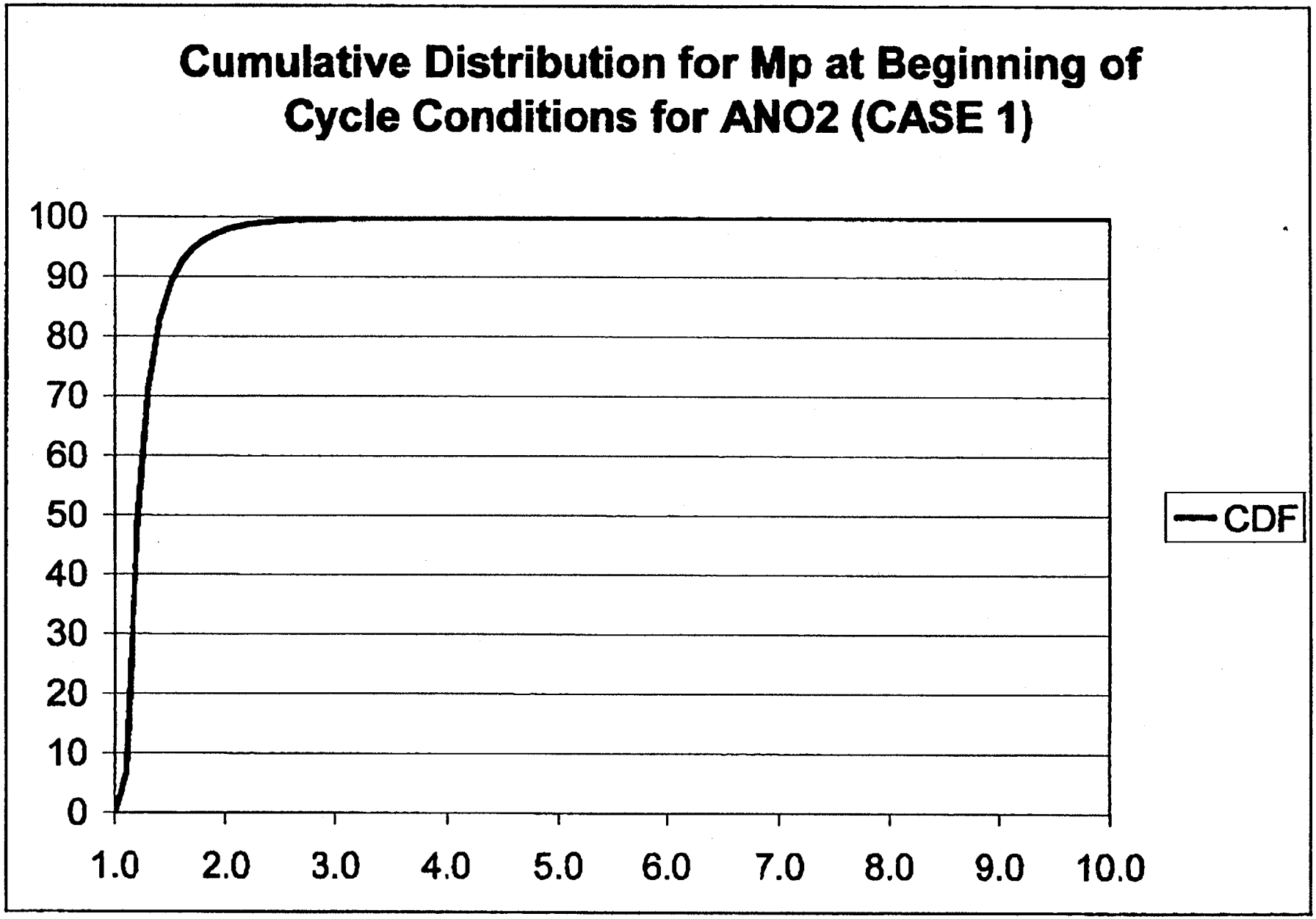
Cumulative Distribution for Mp at Beginning of Cycle Conditions for ANO2 (CASE 1)
100
90
80
70
60
50
40
30
20
10
0
1.0
2.0
3.0
4.0
5.0
6.0
7.0
8.0
9.0
10.0
CDF

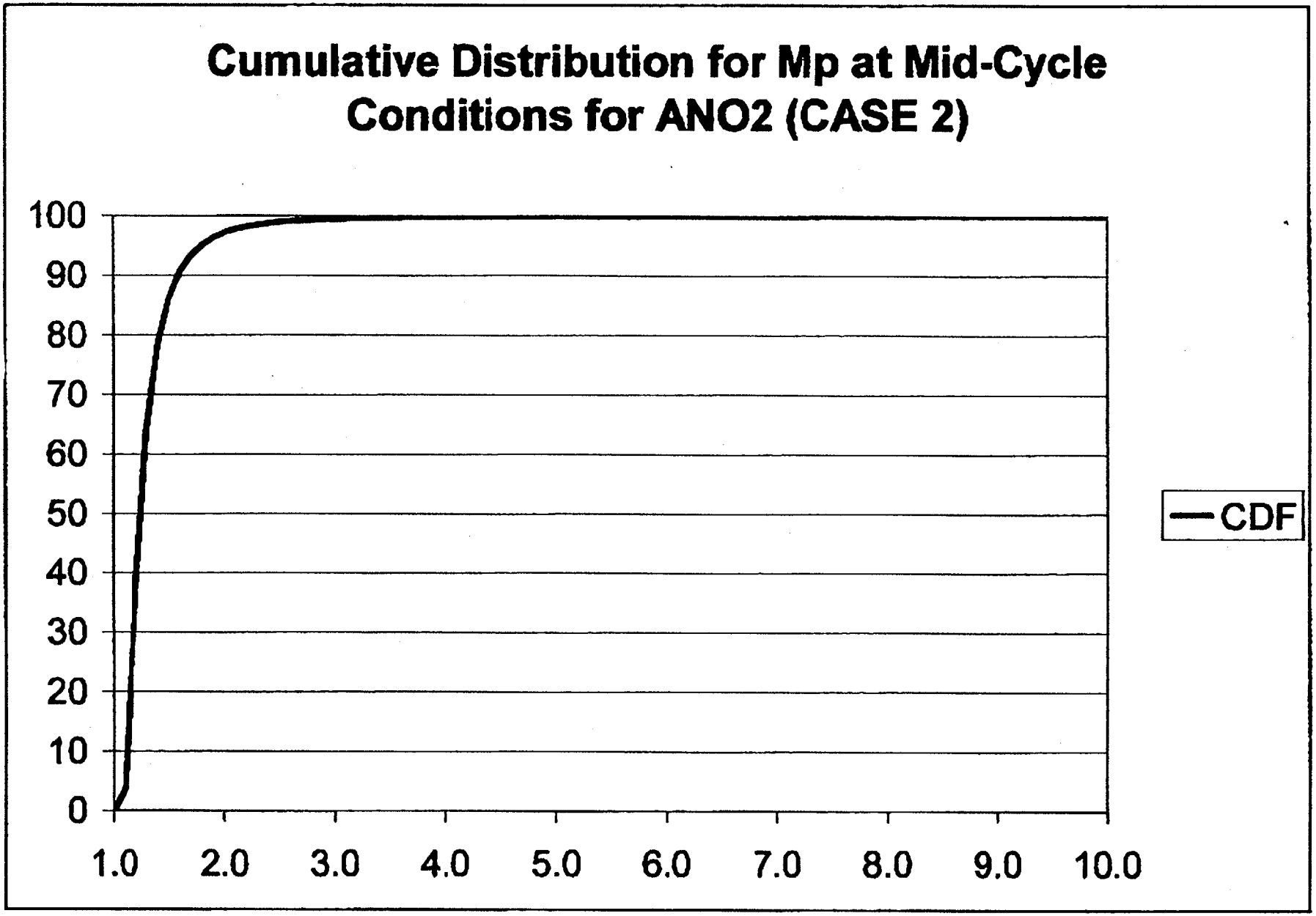
Cumulative Distribution for Mp at Mid-Cycle Conditions for ANO2 (CASE 2)
100
90
80
70
60
50
40
30
20
10
0
1.0
2.0
3.0
4.0
5.0
6.0
7.0
8.0
9.0
10.0
CDF

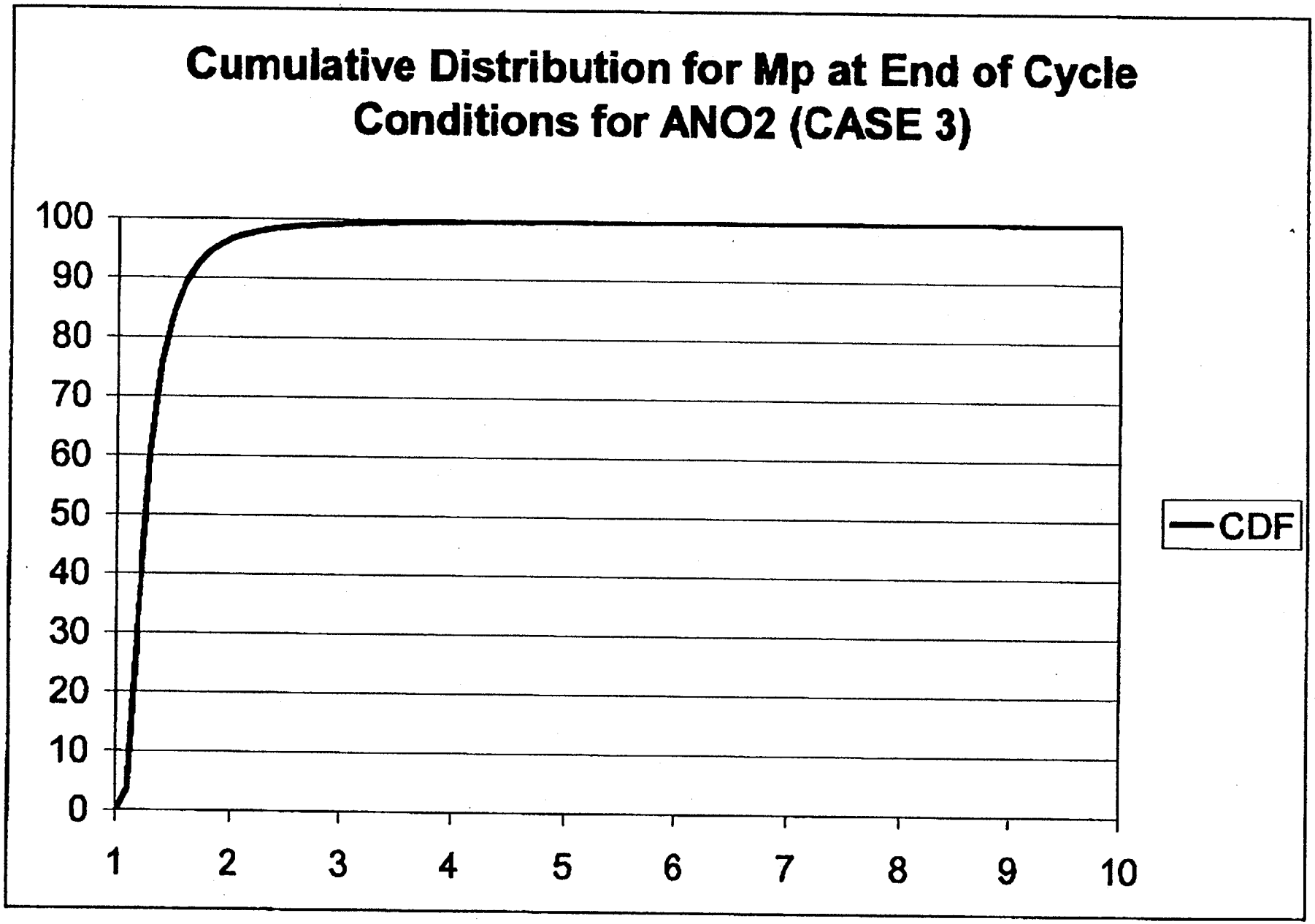
Cumulative Distribution for Mp at End of Cycle Conditions for ANO2 (CASE 3)
100
90
80
70
60
50
40
30
20
10
0
1
2
3
4
5
6
7
8
9
10
CDF

Mp and CDF Values for
the Beginning of Cycle Conditions for ANO2
(CASE 1)

Mp	CDF	Mp	CDF	Mp	CDF
1.0	0.00000	5.1	0.99968	9.2	0.99991
1.1	0.06777	5.2	0.99970	9.3	0.99991
1.2	0.47099	5.3	0.99973	9.4	0.99991
1.3	0.71055	5.4	0.99973	9.5	0.99991
1.4	0.82756	5.5	0.99973	9.6	0.99991
1.5	0.89105	5.6	0.99974	9.7	0.99991
1.6	0.92681	5.7	0.99975	9.8	0.99991
1.7	0.94922	5.8	0.99976	9.9	0.99991
1.8	0.96363	5.9	0.99976	10.0	0.99991
1.9	0.97313	6.0	0.99976		
2.0	0.97940	6.1	0.99977		
2.1	0.98441	6.2	0.99980		
2.2	0.98805	6.3	0.99980		
2.3	0.99067	6.4	0.99982		
2.4	0.99240	6.5	0.99983		
2.5	0.99382	6.6	0.99983		
2.6	0.99489	6.7	0.99983		
2.7	0.99566	6.8	0.99983		
2.8	0.99634	6.9	0.99984		
2.9	0.99690	7.0	0.99985		
3.0	0.99727	7.1	0.99985		
3.1	0.99759	7.2	0.99985		
3.2	0.99791	7.3	0.99985		
3.3	0.99815	7.4	0.99985		
3.4	0.99835	7.5	0.99986		
3.5	0.99851	7.6	0.99986		
3.6	0.99866	7.7	0.99987		
3.7	0.99881	7.8	0.99988		
3.8	0.99889	7.9	0.99988		
3.9	0.99902	8.0	0.99988		
4.0	0.99914	8.1	0.99988		
4.1	0.99920	8.2	0.99988		
4.2	0.99932	8.3	0.99988		
4.3	0.99935	8.4	0.99988		
4.4	0.99942	8.5	0.99988		
4.5	0.99948	8.6	0.99988		
4.6	0.99953	8.7	0.99988		
4.7	0.99954	8.8	0.99988		
4.8	0.99959	8.9	0.99988		
4.9	0.99961	9.0	0.99988		
5.0	0.99964	9.1	0.99991		

Mp and CDF Values for
Mid-Cycle Conditions for ANO2 (CASE 2)

Mp	CDF	Mp	CDF	Mp	CDF
1.0	0.00000	5.1	0.99911	9.2	0.99975
1.1	0.03814	5.2	0.99918	9.3	0.99975
1.2	0.37439	5.3	0.99922	9.4	0.99976
1.3	0.64071	5.4	0.99923	9.5	0.99977
1.4	0.78234	5.5	0.99926	9.6	0.99978
1.5	0.86098	5.6	0.99929	9.7	0.99978
1.6	0.90716	5.7	0.99932	9.8	0.99979
1.7	0.93485	5.8	0.99936	9.9	0.99980
1.8	0.95272	5.9	0.99938	10.0	0.99981
1.9	0.96468	6.0	0.99940		
2.0	0.97263	6.1	0.99942		
2.1	0.97850	6.2	0.99944		
2.2	0.98273	6.3	0.99945		
2.3	0.98593	6.4	0.99946		
2.4	0.98840	6.5	0.99947		
2.5	0.99016	6.6	0.99949		
2.6	0.99182	6.7	0.99951		
2.7	0.99308	6.8	0.99952		
2.8	0.99392	6.9	0.99954		
2.9	0.99469	7.0	0.99955		
3.0	0.99512	7.1	0.99957		
3.1	0.99577	7.2	0.99959		
3.2	0.99621	7.3	0.99959		
3.3	0.99646	7.4	0.99961		
3.4	0.99682	7.5	0.99961		
3.5	0.99716	7.6	0.99962		
3.6	0.99749	7.7	0.99962		
3.7	0.99767	7.8	0.99963		
3.8	0.99779	7.9	0.99964		
3.9	0.99792	8.0	0.99966		
4.0	0.99808	8.1	0.99967		
4.1	0.99820	8.2	0.99967		
4.2	0.99833	8.3	0.99967		
4.3	0.99844	8.4	0.99969		
4.4	0.99859	8.5	0.99969		
4.5	0.99864	8.6	0.99971		
4.6	0.99877	8.7	0.99971		
4.7	0.99882	8.8	0.99973		
4.8	0.99892	8.9	0.99973		
4.9	0.99899	9.0	0.99973		
5.0	0.99905	9.1	0.99974		

Mp and CDF Values for
End of Cycle Conditions for ANO2 (CASE 3)

Mp	CDF	Mp	CDF	Mp	CDF
1.0	0.00000	5.1	0.99843	9.2	0.99934
1.1	0.03554	5.2	0.99850	9.3	0.99935
1.2	0.33866	5.3	0.99857	9.4	0.99936
1.3	0.60814	5.4	0.99864	9.5	0.99937
1.4	0.75898	5.5	0.99870	9.6	0.99938
1.5	0.84297	5.6	0.99873	9.7	0.99938
1.6	0.89274	5.7	0.99875	9.8	0.99940
1.7	0.92393	5.8	0.99881	9.9	0.99940
1.8	0.94408	5.9	0.99884	10.0	0.99941
1.9	0.95741	6.0	0.99887		
2.0	0.96648	6.1	0.99888		
2.1	0.97288	6.2	0.99892		
2.2	0.97781	6.3	0.99892		
2.3	0.98165	6.4	0.99898		
2.4	0.98469	6.5	0.99899		
2.5	0.98684	6.6	0.99901		
2.6	0.98851	6.7	0.99903		
2.7	0.99004	6.8	0.99904		
2.8	0.99140	6.9	0.99906		
2.9	0.99233	7.0	0.99908		
3.0	0.99320	7.1	0.99911		
3.1	0.99387	7.2	0.99913		
3.2	0.99454	7.3	0.99916		
3.3	0.99495	7.4	0.99916		
3.4	0.99549	7.5	0.99916		
3.5	0.99579	7.6	0.99917		
3.6	0.99615	7.7	0.99918		
3.7	0.99640	7.8	0.99919		
3.8	0.99669	7.9	0.99920		
3.9	0.99695	8.0	0.99921		
4.0	0.99711	8.1	0.99922		
4.1	0.99731	8.2	0.99924		
4.2	0.99743	8.3	0.99926		
4.3	0.99760	8.4	0.99928		
4.4	0.99776	8.5	0.99929		
4.5	0.99786	8.6	0.99930		
4.6	0.99794	8.7	0.99930		
4.7	0.99805	8.8	0.99930		
4.8	0.99819	8.9	0.99932		
4.9	0.99831	9.0	0.99933		
5.0	0.99837	9.1	0.99934		