GPU NUCLEAR

GPU Nuclear, Inc.
Route 441 South
Post Office Box 480
Middletown, PA 17057-0480
Tel 717-944-7621
E910-00-006
717-948-8720

May 17, 2000

U.S. Nuclear Regulatory Commission
Attn: Document Control Desk
Washington, DC 20555

Subject: Saxton Nuclear Experimental Corporation
Operating License No. DPR-4
Docket No. 50-146
Biennial 10 CFR 50.59 Report and Updated Safety Analysis Report

Gentlemen,

Attached is the biennial update of the Saxton Nuclear Experimental Corporation (SNEC) Facility 'Updated Safety Analysis Report' as required by 10 CFR 50.71(e). Included is the 'Biennial 10 CFR 50.59 Report' as required by 10 CFR 50.59(b)(2). This report provides a description of changes, tests, and experiments meeting the requirements of 10 CFR 50.59 made during the previous two calendar years and a description of the changes made to the SNEC Facility USAR during the previous two calendar years.

Sincerely,

G. A. Kuehn
Vice President SNEC

JJB/caw

Attachment 1 – Biennial 10 CFR 50.59 Report
Attachment 2 – SNEC Facility Updated Safety Analysis Report (Rev. 3)

cc: Alexander Adams
Thomas Dragoun

IE47

Attachment 1

SAXTON NUCLEAR EXPERIMENTAL CORPORATION FACILITY
UPDATED SAFETY ANALYSIS REPORT
BIENNIAL UPDATE

INTRODUCTION

Attached is the biennial update of the Saxton Nuclear Experimental Corporation [SNEC] Facility 'Updated Safety Analysis Report' as required by 10 CFR 50.71(e). Included is the 'Biennial 10 CFR 50.59 Report' as required by10 CFR 50.59(b)(2). This report provides a description of changes, tests, and experiments meeting the requirements of 10 CFR 50.59 made during the previous two calendar years and a description of the changes made to the SNEC Facility USAR during the previous two calendar years.

SNEC FACILITY DECOMMISSIONING ACTIVITIES – FEB 1998 – FEB 2000

The SNEC Facility was maintained in a safe and stable condition during the period between February 1998 and February 2000. Activities included rad waste processing and shipment, routine surveillances and inspections, and conduct of decommissioning activities that are further discussed below.

The NRC approved the start of full-scale decommissioning in April 1998 and operations began in May 1998. Up to that time; selected loose materials, spare components, asbestos insulation and electrical components had been removed with the NRC's permission. Following approval in April 1998, the main focus of decommissioning efforts was on making all necessary preparations for the removal of the nuclear steam supply system components, namely the reactor pressure vessel, the steam generator, the pressurizer and the main coolant pump.

The SNEC Large Component Removal Project (LCRP) was completed on November 22, 1998. This involved the preparation, removal, packaging, shipment and disposal of the SNEC Facility Pressurizer, Steam Generator, and Reactor Pressure Vessel.

Following removal and shipment of the SNEC Facility large components, decommissioning activities focused on the removal and shipment of the remaining permanent mechanical and electrical equipment, systems and components. This work was completed by May 1999. All permanent mechanical and electrical systems and components have been removed and shipped off-site for processing/dsiposal in accordance with applicable regulations. The only remaining systems are the floor drains in the Containment Vessel and small piping-system remnant sections where they penetrate walls, floors and ceilings and site storm drains. The contaminated piping remnants will be either removed or remediated in situ. Site storm drains have been radiologically characterized and will be included in the Final Status Survey.

Since May 1999, the focus has been on Containment Vessel concrete remediation work. As of the date of this update, over 75% of the concrete surfaces in the Containment Vessel have been surface-scabbled to remove a thin layer of concrete and the associated surface layer of contamination. In addition to surface scabbling, more aggressive techniques are being employed in areas of cracks, penetrations and other surface imperfections. Diamond wire sawing and core boring have been and are continuing to be employed to remove larger and deeper areas of affected concrete.

From June 1999 on, the SNEC Facility has been conducting site characterization activities in support of License Termination preparations.

SNEC FACILITY 'UPDATED SAFETY ANALYSIS REPORT' CHANGES

This update to the SNEC Facility USAR (Revision-3) includes minor revisions to the descriptions of the Containment Vessel Ventilation System smoke detector locations and minor revisions to the description of the Containment Vessel Personnel Access Hatch door arrangement. This revision also reflects deletion of the Reactor Pressure Vessel, the Pressurizer, the Steam Generator and all mechanical and electrical systems and components that have been removed from the Containment Vessel and shipped off-site. Several other minor changes were made that include updating tables and figures to reflect existing conditions, deletion of tables and figures that addressed removed equipment, updating the decommissioning person-rem exposure estimate, updating references and correction of typographical errors. Each of the changes made to the SNEC Facility USAR during the previous two years was evaluated and determined to not involve an unreviewed safety question.

PROCEDURE CHANGES

The typical categories of procedures and station work instructions that were changed in 1998 and 1999 were, radiological controls, surveillances, administrative, emergency response, characterization, Large Component Removal, mechanical and electrical system decommissioning, and concrete remediation. All procedure changes at the SNEC Facility are made in accordance with the SNEC Facility Safety Review Program. This program provides a 10 CFR 50.59 screening process to determine if the change requires a written safety evaluation and that the change precludes the occurrence of an Unreviewed Safety Question or Technical Specification change. During 1998 and 1999 there were 48 SNEC Facility procedure and station work instruction changes that required written safety evaluations. All procedure and station work instruction changes made were determined to not constitute an Unreviewed Safety Question and no Technical Specification changes were required.

TESTS AND EXPERIMENTS

No tests or experiments not described in the SNEC Facility SAR were performed at the SNEC Facility during 1998 and 1999.

FACILITY MODIFICATION

Activities included in this section were performed without prior approval of the NRC in accordance with the provisions of 10 CFR 50.59. The facility modifications are reflected in Revision-3 to the SNEC Facility Updated Safety Analysis Report. The modifications listed below were evaluated and determined to not constitute an Unreviewed Safety Question. A summary of the modifications and the associated safety evaluations, is listed below:

Containment Vessel Concrete Removal

During the conduct of SNEC decommissioning activities Containment Vessel concrete surfaces that have become contaminated during plant operations are being scabbled to remove the contaminated surface concrete. In addition, volumetrically contaminated structural concrete is being removed. Controls are in place, which require structural engineering evaluation of structural concrete prior to removal operations. Over 75% of the contaminated concrete surface of the Containment Vessel has been scabbled and several areas of volumetrically contaminated concrete have either been remediated or have been identified as requiring remediation.

Applicable Safety Evaluations SE-SWI-98-003, SE-SWI-98-003.2, SE-SWI-98-003.3, SE-SWI-98-003.4 determined that the controlling documents contain sufficient controls and precautions such that the activity will not adversely impact Safe Decommissioning Operations. The permitted activities are adequately bound by the Accident Analyses described in the SNEC SAR and there is no increase in either the probability of occurrence of or consequences of any analyzed accident scenario. Sufficient procedural controls and precautions are included such that there is no increased probability of occurrence of a malfunction of SNEC Facility equipment 'Important to Safety' [as defined in the SNEC Facility Quality Classification List] nor would the probability of an increase in the consequences of "Important to Safety" equipment failure result. The credible accident scenarios that can be attributed to this activity are adequately bound by the SAR Accident Analyses and no new, credible accident scenarios are introduced by these activities. No new failure modes for SNEC Facility equipment "Important to Safety" are introduced as a result of this work scope.

Characterization of Reactor Pressure Vessel

Characterization of Reactor Pressure Vessel Internals was performed in order to support development of shipping and disposal methodologies. This activity involved obtaining internal radiation and surface contamination measurements through an access port into the Reactor Pressure Vessel.

Safety Evaluation SE-SWI-98-035 determined that the controlling documents contain sufficient controls and precautions such that the activity will not adversely impact Safe Decommissioning Operations. The permitted activities are adequately bound by the Accident Analyses described in the SNEC SAR and there is no increase in either the probability of occurrence of or consequences of any analyzed accident scenario. Sufficient procedural controls and precautions are included such that there is no increased probability of occurrence of a malfunction of SNEC Facility equipment 'Important to Safety' [as defined in the SNEC Facility Quality Classification List] nor would the probability of an increase in the consequences of "Important to Safety" equipment failure result. The credible accident scenarios that can be attributed to this activity are adequately bound by the SAR Accident Analyses and no new, credible accident scenarios are introduced by these activities. No new failure modes for SNEC Facility equipment "Important to Safety" are introduced as a result of this work scope.

Control Rod Drive Mechanism Characterization and Removal

This activity involved characterization and removal of the Reactor Pressure Vessel, Control Rod Drive mechanisms and sealing the openings in the Reactor Pressure Vessel in preparation for removal and disposition.

Applicable Safety Evaluations SE-SWI-98-036 and SE-SWI-98-048 determined that the controlling documents contain sufficient controls and precautions such that the activity will not adversely impact Safe Decommissioning Operations. The permitted activities are adequately bound by the Accident Analyses described in the SNEC SAR and there is no increase in either the probability of occurrence of or consequences of any analyzed accident scenario. Sufficient procedural controls and precautions are included such that there is no increased probability of occurrence of a malfunction of SNEC Facility equipment 'Important to Safety' [as defined in the SNEC Facility Quality Classification List] nor would the probability of an increase in the consequences of "Important to Safety" equipment failure result. The credible accident scenarios that can be attributed to this activity are adequately bound by the SAR Accident Analyses and no new, credible accident scenarios are introduced by these activities. No new failure modes for SNEC Facility equipment "Important to Safety" are introduced as a result of this work scope.

Containment Vessel Shield Block Removal

This activity removed the 7 reactor cavity/storage well shield blocks and shipped them off-site for processing and disposal. A temporary cover was installed over the opening where the shield blocks were formerly located.

Safety Evaluation SE-SWI-98-037 determined that the controlling documents contain sufficient controls and precautions such that the activity will not adversely impact Safe Decommissioning Operations. The permitted activities are adequately bound by the Accident Analyses described in the SNEC SAR and there is no increase in either the probability of occurrence of or consequences of any analyzed accident scenario. Sufficient procedural controls and precautions are included such that there is no increased probability of occurrence of a malfunction of SNEC Facility equipment 'Important to Safety' [as defined in the SNEC Facility Quality Classification List] nor would the probability of an increase in the consequences of "Important to Safety" equipment failure result. The credible accident scenarios that can be attributed to this activity are adequately bound by the SAR Accident Analyses and no new, credible accident scenarios are introduced by these activities. No new failure modes for SNEC Facility equipment "Important to Safety" are introduced as a result of this work scope.

Containment Vessel Mechanical Removal – Auxiliary Compartment

This activity removed all permanent plant mechanical systems and components from the Containment Vessel auxiliary compartment for shipment and disposal.

Safety Evaluation SE-SWI-98-002.1 determined that the controlling documents contain sufficient controls and precautions such that the activity will not adversely impact Safe Decommissioning Operations. The permitted activities are adequately bound by the Accident Analyses described in the SNEC SAR and there is no increase in either the probability of occurrence of or consequences of any analyzed accident scenario. Sufficient procedural controls and precautions are included such that there is no increased probability of occurrence of a malfunction of SNEC Facility equipment 'Important to Safety' [as defined in the SNEC Facility Quality Classification List] nor would the probability of an increase in the consequences of "Important to Safety" equipment failure result. The credible accident scenarios that can be attributed to this activity are adequately bound by the SAR Accident Analyses and no new, credible accident scenarios are introduced by these activities. No new failure modes for SNEC Facility equipment "Important to Safety" are introduced as a result of this work scope.

Containment Vessel Mechanical Removal – Primary Compartment

This activity removed all permanent plant mechanical systems and components from the Containment Vessel primary compartment for shipment and disposal.

Safety Evaluation SE-SWI-98-002.2 determined that the controlling documents contain sufficient controls and precautions such that the activity will not adversely impact Safe Decommissioning Operations. The permitted activities are adequately bound by the Accident Analyses described in the SNEC SAR and there is no increase in either the probability of occurrence of or consequences of any analyzed accident scenario. Sufficient procedural controls and precautions are included such that there is no increased probability of occurrence of a malfunction of SNEC Facility equipment 'Important to Safety' [as defined in the SNEC Facility Quality Classification List] nor would the probability of an increase in the consequences of "Important to Safety" equipment failure result. The credible accident scenarios that can be attributed to this activity are adequately bound by the SAR Accident Analyses and no new, credible accident scenarios are

introduced by these activities. No new failure modes for SNEC Facility equipment "Important to Safety" are introduced as a result of this work scope.

Containment Vessel Mechanical Removal – Reactor Cavity

This activity removed all permanent plant mechanical systems and components from the Containment Vessel reactor cavity for shipment and disposal.

Safety Evaluation SE-SWI-98-002.3 determined that the controlling documents contain sufficient controls and precautions such that the activity will not adversely impact Safe Decommissioning Operations. The permitted activities are adequately bound by the Accident Analyses described in the SNEC SAR and there is no increase in either the probability of occurrence of or consequences of any analyzed accident scenario. Sufficient procedural controls and precautions are included such that there is no increased probability of occurrence of a malfunction of SNEC Facility equipment 'Important to Safety' [as defined in the SNEC Facility Quality Classification List] nor would the probability of an increase in the consequences of "Important to Safety" equipment failure result. The credible accident scenarios that can be attributed to this activity are adequately bound by the SAR Accident Analyses and no new, credible accident scenarios are introduced by these activities. No new failure modes for SNEC Facility equipment "Important to Safety" are introduced as a result of this work scope.

Containment Vessel Dome Openings

This activity cut a 10-foot diameter and a 15-foot diameter removable opening in the Containment Vessel dome to permit crane access during the large component removal operation. The 15-foot diameter opening also contains a small rigging hatch in its approximate center. Openings were externally reinforced to preserve the structural integrity of the dome and were properly sealed to preserve containment integrity following use.

Applicable Safety Evaluations SE-SWI-98-046 and SE-SWI-98-046 Revision-1 determined that the controlling documents contain sufficient controls and precautions such that the activity will not adversely impact Safe Decommissioning Operations. The permitted activities are adequately bound by the Accident Analyses described in the SNEC SAR and there is no increase in either the probability of occurrence of or consequences of any analyzed accident scenario. Sufficient procedural controls and precautions are included such that there is no increased probability of occurrence of a malfunction of SNEC Facility equipment 'Important to Safety' [as defined in the SNEC Facility Quality Classification List] nor would the probability of an increase in the consequences of "Important to Safety" equipment failure result. The credible accident scenarios that can be attributed to this activity are adequately bound by the SAR Accident Analyses and no new, credible accident scenarios are introduced by these activities. No new failure modes for SNEC Facility equipment "Important to Safety" are introduced as a result of this work scope.

Large Component Removal - Rigging

This activity controlled the rigging and removal of the Reactor Pressure Vessel, the Steam Generator, and the Pressurizer in support of the Large Component Removal Project.

Applicable Safety Evaluations SE-SWI-98-047, SE-SWI-98-052, and SE-SWI-98-055 determined that the controlling documents contain sufficient controls and precautions such that the activity will not adversely impact Safe Decommissioning Operations. The permitted activities are adequately bound by the Accident Analyses described in the SNEC SAR and there is no increase in either the probability of occurrence of or consequences of any analyzed accident scenario. Sufficient procedural controls and precautions are included such that there is no increased

probability of occurrence of a malfunction of SNEC Facility equipment 'Important to Safety' [as defined in the SNEC Facility Quality Classification List] nor would the probability of an increase in the consequences of "Important to Safety" equipment failure result. The credible accident scenarios that can be attributed to this activity are adequately bound by the SAR Accident Analyses and no new, credible accident scenarios are introduced by these activities. No new failure modes for SNEC Facility equipment "Important to Safety" are introduced as a result of this work scope.

Large Component Removal – Closure Welding

This activity controlled the installation of welded closures to seal openings in the Reactor Pressure Vessel, the Steam Generator, and the Pressurizer in support of the Large Component Removal Project.

Applicable Safety Evaluations SE-SWI-98-049, SE-TCN-SWI-98-049, SE-SWI-98-053, and SE-SWI-98-056 determined that the controlling documents contain sufficient controls and precautions such that the activity will not adversely impact Safe Decommissioning Operations. The permitted activities are adequately bound by the Accident Analyses described in the SNEC SAR and there is no increase in either the probability of occurrence of or consequences of any analyzed accident scenario. Sufficient procedural controls and precautions are included such that there is no increased probability of occurrence of a malfunction of SNEC Facility equipment 'Important to Safety' [as defined in the SNEC Facility Quality Classification List] nor would the probability of an increase in the consequences of "Important to Safety" equipment failure result. The credible accident scenarios that can be attributed to this activity are adequately bound by the SAR Accident Analyses and no new, credible accident scenarios are introduced by these activities. No new failure modes for SNEC Facility equipment "Important to Safety" are introduced as a result of this work scope.

Reactor Pressure Vessel and Shipping Canister Grouting and Coating

This activity controlled the placement of stabilizing grout inside of the Reactor Pressure Vessel and inside of the loaded Reactor Pressure Vessel shipping canister. Also included in this activity was the application of a paint coating to the external surfaces of the Reactor Pressure Vessel prior to its removal from the Containment Vessel.

Applicable Safety Evaluations SE-SWI-98-051 and SE-SWI-98-051 Revision-1 determined that the controlling documents contain sufficient controls and precautions such that the activity will not adversely impact Safe Decommissioning Operations. The permitted activities are adequately bound by the Accident Analyses described in the SNEC SAR and there is no increase in either the probability of occurrence of or consequences of any analyzed accident scenario. Sufficient procedural controls and precautions are included such that there is no increased probability of occurrence of a malfunction of SNEC Facility equipment 'Important to Safety' [as defined in the SNEC Facility Quality Classification List] nor would the probability of an increase in the consequences of "Important to Safety" equipment failure result. The credible accident scenarios that can be attributed to this activity are adequately bound by the SAR Accident Analyses and no new, credible accident scenarios are introduced by these activities. No new failure modes for SNEC Facility equipment "Important to Safety" are introduced as a result of this work scope.

Steam Generator and Pressurizer Grouting and Coating

This activity controlled the placement of stabilizing grout inside of the Steam Generator and the Pressurizer. Also included in this activity was the application of a paint coating to the external surfaces of these components prior to removal from the Containment Vessel.

Applicable Safety Evaluations SE-SWI-98-054 and SE-SWI-98-057 determined that the controlling documents contain sufficient controls and precautions such that the activity will not adversely impact Safe Decommissioning Operations. The permitted activities are adequately bound by the Accident Analyses described in the SNEC SAR and there is no increase in either the probability of occurrence of or consequences of any analyzed accident scenario. Sufficient procedural controls and precautions are included such that there is no increased probability of occurrence of a malfunction of SNEC Facility equipment 'Important to Safety' [as defined in the SNEC Facility Quality Classification List] nor would the probability of an increase in the consequences of "Important to Safety" equipment failure result. The credible accident scenarios that can be attributed to this activity are adequately bound by the SAR Accident Analyses and no new, credible accident scenarios are introduced by these activities. No new failure modes for SNEC Facility equipment "Important to Safety" are introduced as a result of this work scope.

Demineralizer Vessel Grouting and Removal

This activity controlled the placement of stabilizing grout in and removal of the three SNEC demineralizer vessels located in the Containment Vessel storage well.

Applicable Safety Evaluations SE-SWI-98-002.7 and SE-SWI-98-002.04 determined that the controlling documents contain sufficient controls and precautions such that the activity will not adversely impact Safe Decommissioning Operations. The permitted activities are adequately bound by the Accident Analyses described in the SNEC SAR and there is no increase in either the probability of occurrence of or consequences of any analyzed accident scenario. Sufficient procedural controls and precautions are included such that there is no increased probability of occurrence of a malfunction of SNEC Facility equipment 'Important to Safety' [as defined in the SNEC Facility Quality Classification List] nor would the probability of an increase in the consequences of "Important to Safety" equipment failure result. The credible accident scenarios that can be attributed to this activity are adequately bound by the SAR Accident Analyses and no new, credible accident scenarios are introduced by these activities. No new failure modes for SNEC Facility equipment "Important to Safety" are introduced as a result of this work scope.

Containment Vessel Structural Removal

This activity removed the structural steel from the Containment Vessel auxiliary compartment and operating floor, the reactor cavity, and the primary compartment.

Applicable Safety Evaluations SE-SWI-98-041, SE-SWI-98-043, and SE-SWI-98-042 determined that the controlling documents contain sufficient controls and precautions such that the activity will not adversely impact Safe Decommissioning Operations. The permitted activities are adequately bound by the Accident Analyses described in the SNEC SAR and there is no increase in either the probability of occurrence of or consequences of any analyzed accident scenario. Sufficient procedural controls and precautions are included such that there is no increased probability of occurrence of a malfunction of SNEC Facility equipment 'Important to Safety' [as defined in the SNEC Facility Quality Classification List] nor would the probability of an increase in the consequences of "Important to Safety" equipment failure result. The credible accident scenarios that can be attributed to this activity are adequately bound by the SAR Accident Analyses and no new, credible accident scenarios are introduced by these activities. No new failure modes for SNEC Facility equipment "Important to Safety" are introduced as a result of this work scope.

Large Component Tie-Down for Transport

This activity controlled the tie-down of the Reactor Pressure Vessel, the Steam Generator, and the Pressurizer for truck transport to the rail siding and tie-down for rail transport to the disposal site.

Applicable Safety Evaluations SE-SWI-98-058 and SE-SWI-98-059 determined that the controlling documents contain sufficient controls and precautions such that the activity will not adversely impact Safe Decommissioning Operations. The permitted activities are adequately bound by the Accident Analyses described in the SNEC SAR and there is no increase in either the probability of occurrence of or consequences of any analyzed accident scenario. Sufficient procedural controls and precautions are included such that there is no increased probability of occurrence of a malfunction of SNEC Facility equipment 'Important to Safety' [as defined in the SNEC Facility Quality Classification List] nor would the probability of an increase in the consequences of "Important to Safety" equipment failure result. The credible accident scenarios that can be attributed to this activity are adequately bound by the SAR Accident Analyses and no new, credible accident scenarios are introduced by these activities. No new failure modes for SNEC Facility equipment "Important to Safety" are introduced as a result of this work scope.

Fuel Rack Removal

This activity controlled the removal of the fuel rack from the Containment Vessel.

Safety Evaluation SE-SWI-98-002.5 determined that the controlling documents contain sufficient controls and precautions such that the activity will not adversely impact Safe Decommissioning Operations. The permitted activities are adequately bound by the Accident Analyses described in the SNEC SAR and there is no increase in either the probability of occurrence of or consequences of any analyzed accident scenario. Sufficient procedural controls and precautions are included such that there is no increased probability of occurrence of a malfunction of SNEC Facility equipment 'Important to Safety' [as defined in the SNEC Facility Quality Classification List] nor would the probability of an increase in the consequences of "Important to Safety" equipment failure result. The credible accident scenarios that can be attributed to this activity are adequately bound by the SAR Accident Analyses and no new, credible accident scenarios are introduced by these activities. No new failure modes for SNEC Facility equipment "Important to Safety" are introduced as a result of this work scope.

Reactor Cavity Stairwell Installation

This activity install a temporary scaffolding-style stairwell to provide access to the reactor cavity through the opening that formerly contained the shield plugs

Safety Evaluation SE-SWI-98-031 determined that the controlling documents contain sufficient controls and precautions such that the activity will not adversely impact Safe Decommissioning Operations. The permitted activities are adequately bound by the Accident Analyses described in the SNEC SAR and there is no increase in either the probability of occurrence of or consequences of any analyzed accident scenario. Sufficient procedural controls and precautions are included such that there is no increased probability of occurrence of a malfunction of SNEC Facility equipment 'Important to Safety' [as defined in the SNEC Facility Quality Classification List] nor would the probability of an increase in the consequences of "Important to Safety" equipment failure result. The credible accident scenarios that can be attributed to this activity are adequately bound by the SAR Accident Analyses and no new, credible accident scenarios are introduced by these activities. No new failure modes for SNEC Facility equipment "Important to Safety" are introduced as a result of this work scope.

Removal of Miscellaneous Equipment from the Containment Vessel

This activity controlled removal of the Teleflex shields and the original Containment Vessel air handling equipment.

Safety Evaluation SE-SWI-98-030 determined that the controlling documents contain sufficient controls and precautions such that the activity will not adversely impact Safe Decommissioning Operations. The permitted activities are adequately bound by the Accident Analyses described in the SNEC SAR and there is no increase in either the probability of occurrence of or consequences of any analyzed accident scenario. Sufficient procedural controls and precautions are included such that there is no increased probability of occurrence of a malfunction of SNEC Facility equipment 'Important to Safety' [as defined in the SNEC Facility Quality Classification List] nor would the probability of an increase in the consequences of "Important to Safety" equipment failure result. The credible accident scenarios that can be attributed to this activity are adequately bound by the SAR Accident Analyses and no new, credible accident scenarios are introduced by these activities. No new failure modes for SNEC Facility equipment "Important to Safety" are introduced as a result of this work scope.

Containment Vessel Breather Removal

This activity controlled removal of the Containment Vessel breather filter and resealing of the breather penetration, following start-up of the Containment Vessel Ventilation System.

Safety Evaluation SE-SWI-98-006 determined that the controlling documents contain sufficient controls and precautions such that the activity will not adversely impact Safe Decommissioning Operations. The permitted activities are adequately bound by the Accident Analyses described in the SNEC SAR and there is no increase in either the probability of occurrence of or consequences of any analyzed accident scenario. Sufficient procedural controls and precautions are included such that there is no increased probability of occurrence of a malfunction of SNEC Facility equipment 'Important to Safety' [as defined in the SNEC Facility Quality Classification List] nor would the probability of an increase in the consequences of "Important to Safety" equipment failure result. The credible accident scenarios that can be attributed to this activity are adequately bound by the SAR Accident Analyses and no new, credible accident scenarios are introduced by these activities. No new failure modes for SNEC Facility equipment "Important to Safety" are introduced as a result of this work scope.

DETAILED DESCRIPTION OF SNEC USAR REVISION-3

Due to the extensive nature of this revision, all pages from USAR Revision-2 are replaced by USAR Revison-3

Change bars appearing at the bottom of pages reflect insertion of revised numbering consistent with this revision. Other change bars that appear without explanation below are the result of spacing for readability.

1. Page 1-1, Section 1.1, 2nd paragraph – This section was revised to reflect that only portions of the septic system foundations presently remain.

2. Page 1-2, Section 1.2, 1st paragraph – Correction of a typographical error. Revision-2 text not modified.

3. Page 1-3, Section 1.2, 2nd paragraph – Deleted the phrase "...on February 11, 2000 or upon expiration of the SNEC corporate charter, whichever occurs first." And replaced with the phrase "...upon License Termination in accordance with 10 CFR 50.51(b)."

4. Page 1-3, Figure 1.1-1 – The figure was slightly cropped for clarity.

5. Page 1-4, Table 1.1-1 – This table was completely updated to reflect decommissioning activities that have occurred since the last revision. Additionally, the material that was formerly contained in Table 1.2-1 has been incorporated into this table.

6. Page 1-7, Table 1.2-1 – This table has been deleted and its contents included in Table 1.1-1.

7. Page 1-8, Section 1.3 – The section title has been revised from "SAFSTOR/PRE-DECOMMISSIONING" to "SAFSTOR/PRE-DECOMMISSIONING/DECOMMISSIONING" in order to reflect activities that are associated with decommissioning.

8. Page 1-8, Section 1.3.1, 1st paragraph – Correction of a typographical error. Revision-2 text not modified.

9. Page 1-8, Section 1.3.1, 3rd paragraph – Revised to include parenthetical insertion of acronyms for the named facilities.

10. Page 1-8, Section 1.3.1, 4th paragraph – Correction of a typographical error. Revision-2 text not modified.

11. Page 1-9, Section 1.3.1, 5th, 6th, 7th, 8th, and 9th paragraphs – additional narrative material inserted to describe decommissioning activities that have occurred since the last revision of this document.

12. Page 1-10, Section 1.3.2 - Correction of a typographical error. Revision-2 text not modified.

13. Page 1-11, Section 1.3.2, 1.B, 4th paragraph – Revised to reflect that the concrete shield slabs have been removed.

14. Page 1-11, Section 1.3.2, 1.B, 5th paragraph – Revised to reflect that liquid systems have been removed with the exception of small remnant sections that pass through walls.

15. Page 1-11, Section 1.3.2, 1.B, 6th paragraph – Revised to change "houses" to "housed" to reflect that the named components have been removed.

16. Page 1-11, Section 1.3.2, 1.B, 7th paragraph – Revised to change "houses" and "are" to "housed" and "were", to reflect that the named components have been removed.

17. Page 1-12, Section 1.3.2, 1.B, 8th paragraph – Revised to change "houses" and "are" to "housed" and "were", to reflect that the named components have been removed.

18. Page 1-12, Section 1.3.2, 1.B, last paragraph – Revised to change "houses" to "housed" to reflect that named components have been removed.

19. Page 1-12, Section 1.3.2, 2.A – Under "Function" all text has been deleted and the statement "This system has been removed" has been inserted.

20. Page 1-12, Section 1.3.2, 2.B – Under "General Description" all text has been deleted and the statement "This system has been removed" has been inserted.

21. Page 1-12, Section 1.3.2, 2.C – Under "Reactor Vessel" all text has been deleted and the statement "This component has been removed" has been inserted.

22. Page 1-12, Section 1.3.2, 2.D – Under "Steam Generator" all text has been deleted and the statement "This component has been removed" has been inserted.

23. Page 1-12, Section 1.3.2, 2.E – Under "Main Coolant Pump" all text has been deleted and the statement "This component has been removed" has been inserted.

24. Page 1-12, Section 1.3.2, 2.F – Under "Coolant Piping and Fittings" all text has been deleted and the statement "These components have been removed" has been inserted.

25. Page 1-12, Section 1.3.2, 3.A – Under "Function" all text has been deleted and the statement "This system has been removed" has been inserted.

26. Page 1-13, Section 1.3.2, 3.B – Under "Description" all text has been deleted and the statement "This system has been removed" has been inserted.

27. Page 1-13, Section 1.3.2, 3.C.1 – Under "Pressurizer" all text has been deleted and the statement "This component has been removed" has been inserted.

28. Page 1-13, Section 1.3.2, 3.C.2 – Under "Discharge Tank" all text has been deleted and the statement "This component has been removed" has been inserted.

29. Page 1-13, Section 1.3.2, 3.C.3 – Under "Discharge Tank Drain Pumps" all text has been deleted and the statement "These components have been removed" has been inserted.

30. Page 1-13, Section 1.3.2, 4.A – Under "Function" all text has been deleted and the statement "This system has been removed" has been inserted.

31. Page 1-13, Section 1.3.2, 4.B – Under "Description" all text has been deleted and the statement "This system has been removed" has been inserted.

32. Page 1-13, Section 1.3.2, 4.C.1 – Under "Regenerative Heat Exchanger" all text has been deleted and the statement "This component has been removed" has been inserted.

33. Page 1-13, Section 1.3.2, 4.C.2 – Under "Non-Regenerative Heat Exchanger" all text has been deleted and the statement "This component has been removed" has been inserted.

34. Page 1-13, Section 1.3.2, 4.C.3 – Under "Demineralizers" all text has been deleted and the statement "These components have been removed" has been inserted.

35. Page 1-14, Section 1.3.2, 4.C.4 – Under "Filter" all text has been deleted and the statement "This component has been removed" has been inserted.

36. Page 1-14, Section 1.3.2, 5.A – Under "Function" all text has been deleted and the statement "This system has been removed" has been inserted.

37. Page 1-14, Section 1.3.2, 5.B – Under "Description" all text has been deleted and the statement "This system has been removed" has been inserted.

38. Page 1-14, Section 1.3.2, 5.C.1 – Under "Component Cooling Heat Exchangers" all text has been deleted and the statement "These components have been removed" has been inserted.

39. Page 1-14, Section 1.3.2, 5.C.2 – Under "Component Cooling Pumps" all text has been deleted and the statement "These components have been removed" has been inserted.

40. Page 1-14, Section 1.3.2, 6.A – Under "Function" all text has been deleted and the statement "This system has been removed" has been inserted.

41. Page 1-14, Section 1.3.2, 6.B. – Under "Description" all text has been deleted and the statement "This system has been removed" has been inserted.

42. Page 1-14, Section 1.3.2, 6.B.2 – Under "Main Coolant Sample" all text has been deleted and the statement "This system has been removed" has been inserted.

43. Page 1-14, Section 1.3.2, 6.B.3 – Under "Pressurizer Sample" all text has been deleted and the statement "This system has been removed" has been inserted.

44. Page 1-15, Section 1.3.2, 6.B.4 – Under "Purification Demineralizer and Boric Acid Demineralizer Inlet Sample" all text has been deleted and the statement "This system has been removed" has been inserted.

45. Page 1-15, Section 1.3.2, 6.B.5 – Under "Purification Demineralizer and Boric Acid Demineralizer Outlet Sample" all text has been deleted and the statement "This system has been removed" has been inserted.

46. Page 1-15, Section 1.3.2, 6.B.6 – Under "Storage Well Demineralizer Samples" all text has been deleted and the statement "This system has been removed" has been inserted.

47. Page 1-15, Section 1.3.2, 6.B.7 – Under "Reactor Vessel Shell Leak" all text has been deleted and the statement "This system has been removed" has been inserted.

48. Page 1-15, Section 1.3.2, 6.B.8 – Under "Reactor Vessel Gasket Leak" all text has been deleted and the statement "This system has been removed" has been inserted.

49. Page 1-15, Section 1.3.2, 6.B.9 – Under "Gasketed Closure Leak-offs" all text has been deleted and the statement "This system has been removed" has been inserted.

50. Page 1-15, Section 1.3.2, 6.B.10 – Under "Valve Stem Leakoffs" all text has been deleted and the statement "This system has been removed" has been inserted.

51. Page 1-15, Section 1.3.2, 6.B.11 – Under "Reactor Vessel Seal Weld Leak" all text has been deleted and the statement "This system has been removed" has been inserted.

52. Page 1-15, Section 1.3.2, 6.C.1 – Under "Sample Coolers" all text has been removed and the statement "These components have been removed" has been inserted.

53. Page 1-15, Section 1.3.2, 7.A – Under "Function" all text has been deleted and the statement "This system has been removed" has been inserted.

54. Page 1-16, Section 1.3.2, 7.B – Under "Description" all text has been deleted and the statement "This system has been removed" has been inserted.

55. Page 1-16, Section 1.3.2, 7.C.1 – Under "Shutdown Cooling Heat Exchanger" all text has been deleted and the statement "These components have been removed" has been inserted.

56. Page 1-16, Section 1.3.2, 8.A – Under "Function" all text has been deleted and the statement "This system has been removed" has been inserted.

57. Page 1-16, Section 1.3.2, 8.B – Under "Description" all text has been deleted and the statement "This system has been removed" has been inserted.

58. Page 1-16, Section 1.3.2, 8.C – Under "Components" all text has been deleted and the statement "These components have been removed" has been inserted.

59. Page 1-16, Section 1.3.2, 9.A – Under "Function" all text has been deleted and the statement "This system has been removed" has been inserted.

60. Page 1-16, Section 1.3.2, 9.B – Under "Description" all text has been deleted and the statement "This system has been removed" has been inserted.

61. Page 1-16, Section 1.3.2, 9.C.1 – Under "Storage Well Heat Exchanger" all text has been deleted and the statement "This component has been removed" has been inserted.

62. Page 1-17, Section 1.3.2, 9.C.2 – Under "Demineralizer" all text has been deleted and the statement "This component has been removed" has been inserted.

63. Page 1-17, Section 1.3.2, 9.C.3 – Under "Prefilter" all text has been deleted and the statement "This component has been removed" has been inserted.

64. Page 1-17, Section 1.3.2, 9.C.4 – Under "Post-filter" all text has been deleted and the statement "This component has been removed" has been inserted.

65. Page 1-17, Section 1.3.2, 9.C.5 – Under "Storage Well Pumps" all text has been deleted and the statement "These components have been removed" has been inserted.

66. Page 1-17, Section 1.3.2, 10.B – Under "Description" the text has been revised to reflect that the only portions of the system that remain are piping remnants embedded in the floors, walls, and ceilings.

67. Page 1-19, Section 1.3.2, 12.D, 4th paragraph – The words "houses" and "is" have been replaced by "housed" and "was" to reflect that named components have been removed. Also revised to reflect that the steel shot shield has been removed.

68. Page 1-21, Section 1.3.2, 13.D.1 – Paragraph was revised to reflect that the personnel access air lock assembly has only one door.

69. Page 1-22, Section 1.3.2, 13.D.4 – This is a new section that was added to describe the Containment Vessel dome cutouts that were installed during the Large Component Removal Project.

70. Page 1-22, Section 1.3.2, 14.A – The first paragraph was revised to reflect removal of the slab shields and the last paragraph was revised to reflect that epoxy paint covers the protective lining.

71. Page 1-23, Section 1.3.2, 14.C.1 – Under "Function" all text has been deleted and the statement "This system has been removed" has been inserted.

72. Page 1-23, Section 1.3.2, 14.C.2 – Under "Description" all text has been deleted and the statement "This system has been removed" has been inserted.

73. Page 1-23, Section 1.3.2, 15.A – The first paragraph has been revised to include the 10′ by 15′ cutout in the CV liner and to include the 8-ton rating that has been imposed on the 10-ton hoist. The second paragraph has been revised to reflect that the MHB is now part of the exclusion area.

74. Page 1-23, Section 1.3.2, 15.B – the words "system design" have been hyphenated in the heading.

75. Page 1-24, Section 1.3.2, 15.B.3.d – the description of the CV suction duct smoke detectors has been clarified.

76. Page 1-25, Section 1.3.2, 15.B.4 – Under "Design" the phrase "planned opening" has been changed to "opening" in the 1st, 2nd, and 3rd paragraphs.

77. Page 1-27, Section 1.3.2, 16 – Tables 1.3-1 "Reactor Vessel Characteristics", 1.3-2 "Steam Generator Characteristics", 1.3-3 "Pressurizer Characteristics", 1.3-4 "Discharge Tank Characteristics" and 1.3-5 "Characteristics of Original Containment Vessel Ventilating equipment" have had all text deleted and the statement "DELETE – This component (equipment) has been removed" has been inserted under each table heading.

78. Page 1-28, Section 1.3.2, 17 – The word "DELETED" has been inserted after the titles for figures 1-5, 1-6, and 1-7.

79. Page 1-29, Section 1.4, 1st paragraph – The following sentence was added to the end of the paragraph – "Subsequent characterization has taken place from 1996 to present and will continue through remediation and during final status survey activities associated with License Termination."

80. Page 1-29, Section 1.4, 4th paragraph – In the last sentence the phrase "...on all sediment and sludge samples" was revised to read "...on selected sediment and sludge samples" since this testing was not performed on all of the sediment and sludge samples that have been taken post Characterization Plan.

81. Figure 1-1, SNEC Facility Site Layout – has been updated.

82. Figure 1-3, Containment Vessel Sectional View – has been updated.

83. Figure 1-4, Containment Vessel Sectional View – has been updated.

84. Figure 1-5, Reactor Vessel Cross Section – has been DELETED

85. Figure 1-6, Steam Generator – has been DELETED

86. Figure 1-7, Pressurizer – has been DELETED

87. Page 1-30, Section 1.4, last paragraph – Added reference to the SNEC Facility License Termination Plan.

88. Page 1-31, Section 1.6, revised 2nd paragraph to reflect asbestos abatement program.

89. Page 2-1, Section 2.1.1 – revised paragraph to reflect remaining plant systems.

90. Page 2-1, Section 2.1.2 – Revised to reflect equipment has been removed.

91. Page 2-1, Section 2.1.3 – Revised paragraph to reflect current conditions with respect to radionuclide inventory.

92. Page 2-2, Tables 2.1-1 "Reactor Vessel/Internals Curie Determination" and 2.1-2 "System Components with Significant Radionuclide Inventory" contents deleted and following statement added under each "DELETED – This equipment has been removed"

93. Page 2-4, Section 2.2.2 – updated the "Task/Person-Rem" chart to reflect actual experience and to include latest estimates from the License Termination Plan.

94. Page 2-5, Section 2.2.2 – inserted asterisks in 'CEDE' and 'CDE' headings on the chart.

95. Page 6-1, Section 6.0, item 1 – Corrected typographical error – No revision-2 text was modified.

96. Page 6-1, Section 6.0, item 8 – Provide latest reference to the SNEC Facility Decommissioning Environmental Report.

Attachment 2

UPDATED SAFETY ANALYSIS REPORT
FOR
DECOMMISSIONING THE SNEC FACILITY

REVISION-3

FEBRUARY, 2000

TABLE OF CONTENTS

1.0 INTRODUCTION

This report analyzes the safety of the Saxton Nuclear Experimental Corporation (SNEC) Facility during decommissioning. All decommissioning activities will be carried out under the existing Part 50 license DPR-4. GPU Nuclear will be responsible for all decommissioning activities including those performed by contractors.

1.1 SITE AND ENVIRONMENT

The site is located about 100 miles east of Pittsburgh and 90 miles west of Harrisburg in the Allegheny Mountains, three-fourths of a mile north of the Borough of Saxton in Liberty Township, Bedford County, Pennsylvania. The site is on the north side of Pennsylvania Route 913, 17-miles south of U.S. Route 22, and about 15-miles north of the Breezwood Interchange of the Pennsylvania Turnpike.

The only remaining structures of the original facility are, the Containment Vessel (CV), the concrete shield wall located around the north-west and north-east quadrants of the CV, tunnel sections that are immediately adjacent to the outer circumference of the CV, portions of the septic system foundations and underground discharge piping. Concrete barrier walls have been installed to isolate the open ends of the tunnel that were connected to the Control & Auxiliary Buildings, the Radioactive Waste Disposal Facility, and the Steam Plant.

The area surrounding the site is generally rural, forested and mountainous terrain. The population density of the area is low with small concentrations in the valleys and along main highways. The site lies about three-fourths of a mile north of the Borough of Saxton in Liberty Township, Bedford County, Pennsylvania. The population and population trends for the Borough of Saxton, Bedford County and the adjacent counties of Blair and Huntingdon are shown below:

Year	Saxton Borough	Bedford County	Blair County	Huntingdon County
1970	858	42,353	135,356	39,108
1980	814	46,784	136,621	42,253
1990	838	47,919	130,542	44,168
1994(est)	837	48,984	131,819	44,529

The combined population of these three surrounding counties has decreased between 1980 and 1990. At the time the SNEC Facility was constructed, the estimated population of the Borough of Saxton was 975, as recorded during the 1960 census. Thirty years later the population as recorded during the 1990 census was 838, a decline of 14%.

The nearest population center (as defined by 10 CFR 100) of 25,000 or more is the city of Altoona that lies about 20 miles north – northwest of the SNEC Facility site. The 1990 population of Altoona was 51,881. The closest incorporated towns other than the Borough of Saxton are Coalmont Borough about 2.5-miles to the east, Dudley Borough about 3.4-miles to the east and Broad Top City about 5.3-miles also to the east.

Current uses of adjoining properties include undeveloped wooded and residential areas. A cemetery is present along the eastern property boundary, and undeveloped wooded and residential areas are along the northern, southern, and western property boundaries.

The Raystown Branch of the Juniata River in the vicinity of the site is widely used for recreation by local residents primarily for boating and fishing. The vast majority of recreational activities along the river are centered approximately 3 to 4 miles downstream of the site on Raystown Lake. Raystown Lake was formed by damming the Raystown Branch of the Juniata River. The dam was built by the US Army Corps of Engineers from 1968 to 1973 for flood control, recreation, and water quality purposes. At normal pool level the lake is 27-miles long and has an area of 8,300 acres. The lake provides one of the better recreational areas in this part of Pennsylvania. The lake has been intensively developed by the Federal Government for recreational activities including boating, fishing, camping, hunting, and picnicking. Annually, over 475,000 visitors make use of the many recreational activities offered.

The SNEC Environmental Report, dated Feb. 2000, Reference 8, provides further information regarding the geology, hydrology, meteorology and other environmental features associated with the SNEC Facility site.

1.2 NUCLEAR OPERATING HISTORY

The SNEC Facility was built from 1960 to 1962 on the east side of and adjacent to the Saxton Steam Generating Station (SSGS) of the Pennsylvania Electric Company. This facility was located on the east bank of the Raystown Branch of the Juniata River as shown on Figure 1.1-1. It operated from 1962 to 1972 primarily as a research and training reactor.

Table 1.1-1 provides a chronology of major operational events at the SNEC Facility since the start of construction in 1960 until the present.

The SNEC reactor facility is maintained under a 10 CFR50 License and associated Technical Specifications. The license was amended in 1972 to permit possession or radioactive material but not operation of the SNEC Facility reactor. The license expires upon License Termination in accordance with 10 CFR 50.51(b).

Figure 1.1-1
Area Topographical Map of the town of Saxton and surrounding area

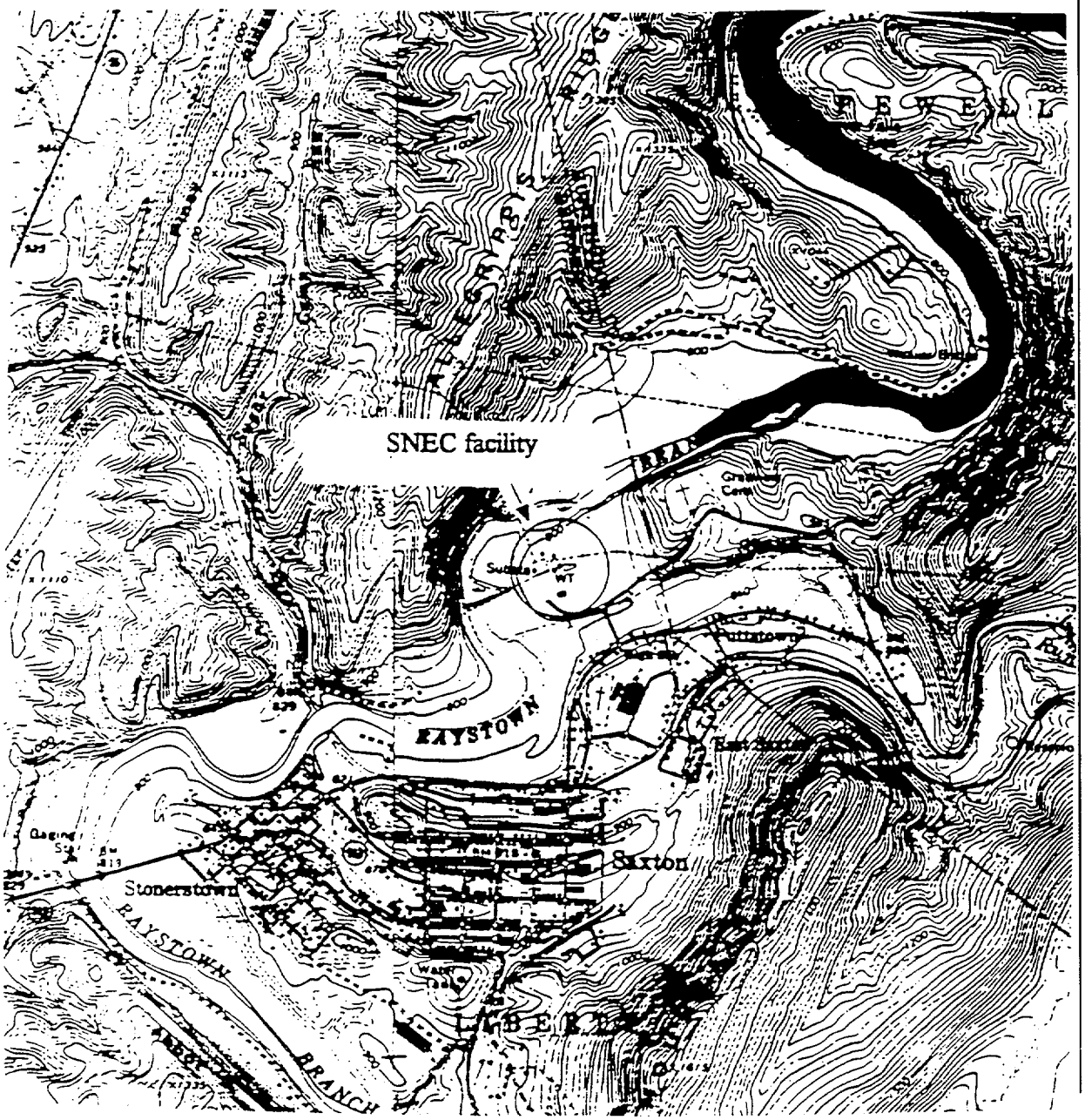

TABLE 1.1-1

Facility Operational and Decommissioning History

Event	Date
Construction authorization	February11, 1960
Initial Criticality	April 13, 1962
First Electricity Generated	November 16, 1962
Unplanned Gas Release (<0.002 Curies)	August 1963
Liquid Spill Outside Safety Injection Pump-house (~1 gal, ~10 uCi)	November 26, 1968
Storage-well Leaks (possibly resulting in Extensive Contamination of Internal of Containment Vessel Structures	1968 – 1973
Unplanned Gas Releases	
7.32 Curies	May 14, 1970
0.034 Curies	August 26, 1970
80.2 Curies	November 29, 1971
19.7 Curies	December 15, 1971
Experiments With Mixed-Oxide Fuel, Fuel Cladding Intentionally "Failed" (Last Fuel Cycle)	December 1969 – May 1972

TABLE 1.1-1

Facility Operational and Decommissioning History
(Continued)

Event	Date
Final Shutdown	May 1, 1972
Nuclear Fuel and Other Removable "Special Nuclear Materials" Shipped Off Site	July 1972 – November 1972
By-Product Material Removed From Site (With exception of material in exclusion area)	November 1972 – Early 1974
Facility Placed in a "SAFSTOR" Condition	February 1975
Groundwater Removed From Radwaste Disposal Facility (RWDF) & Yard Pipe Tunnel (115 uCi of Cs-137)	Late 1986 - January 1987
Decontamination of Control & Auxiliary (C&A) Building, RWDF, Refueling Water Storage Tank (RWST), and Yard Pipe Tunnel	1987 -1988
Final Release Survey of C&A Building, RWDF, RWST, and Yard Pipe Tunnel	October 1988 – June 1989
EG&G/DOE In-Situ Soil Survey	July 1988
Pennsylvania State University Soil Characterization	December 1988 – January 1989
EG&G/DOE Aerial Survey	July 1989
Comprehensive Radiological Survey of Containment Vessel (scoping survey)	1991
Demolition of C&A Building, RWDF, RWST Foundation Pad and Yard Pipe Tunnel	May 1992 – October 1992
Soil Remediation Project	Jun/Nov 1994

TABLE 1.1-1

Facility Operational and Decommissioning History
(Continued)

Event	Date
Site Characterization of Containment Vessel And Remaining Facilities	1995 – Present
Construction of Decommissioning Support Facility (DSF)	August – November 1996
Asbestos Abatement Program	August 1996 – March 1997
Removal of Non-System Related Loose Materials And Electrical Components in Containment Vessel	July 1997 – September 1997
Installation of Containment Vessel Ventilation System	March 1997 – May 1998
Large Component Removal Project (LCRP)	March 1997 – November 1998
NRC Approval of License Amendment No-15 Start of Decommissioning	April 1998
Complete Mechanical and Electrical Systems And Component Removal	May 1998 – May 1999
Containment Vessel Concrete Remediation	May 1999 – Present
Characterization to Support License Termination And MARSSIM	June 1999 – Present
Remediation & Survey of Remaining Site Facilities And the Containment Vessel	Late 1999 – Present

TABLE 1.2-1

SAFSTOR/Pre-decommissioning History

DELETED – Material is contained in Table 1.1-1

1.3 SAFSTOR / PRE-DECOMMISSIONING / DECOMMISSIONING

1.3.1 HISTORICAL SITE INFORMATION

The facility was placed in a condition equivalent to a status later defined by the NRC as SAFSTOR after it was shutdown in 1972. Since then, it has been maintained in a monitored condition. All fuel was removed from the CV in 1972 and shipped to the Atomic Energy Commission (AEC) facility at Savannah River, S.C., which remained owner of the fuel. As a result, neither SNEC nor GPU Nuclear has any responsibility relative to the spent fuel from the SNEC Facility. In addition, the control rod blades and the majority of the super-heated steam test loop were shipped off-site and disposed of at Savannah River, S.C. Following fuel removal, equipment, tanks and piping located outside the CV were removed. The buildings and structures that supported reactor operations were partially decontaminated in 1972 through 1974.

After the formation of the GPU Nuclear Corporation in 1980, SNEC formed an agreement with GPU Nuclear to use GPU Nuclear and its resources to maintain, repair, modify or dismantle SNEC facilities as might be required. Both SNEC and GPU Nuclear are subsidiaries of the same parent company, General Public Utilities Corporation (GPU). While SNEC remains the owner of the facility, a license amendment issued in 1996 designated GPU Nuclear as a co-license holder. It has direct responsibility for management-related activities and compliance with the license and technical specifications. GPU Nuclear will carry out the SNEC Facility decommissioning on behalf of the site owner, SNEC.

Decontamination/removal of reactor support structures/buildings was performed in 1987, 1988 and 1989, in preparation for demolition of these structures. This included the decontamination of the Control and Auxiliary Building (C&A), the Radioactive Waste Disposal Facility (RWDF), Yard Pipe Tunnel, and the Filled Drum Storage Bunker (FDSB), and removal of the Refueling Water Storage Tank (RWST). Upon acceptance of the final release survey by the Nuclear Regulatory Commission (NRC), these structures were demolished in 1992.

In November 1994, the Saxton Soil Remediation Project was completed. This was a comprehensive project involving monitoring, sampling, excavation, packaging and shipment of contaminated site soil. This program successfully reduced radioactive contamination levels outside the exclusion area below the NRC current and presently proposed levels required to meet site cleanup criteria for unrestricted use.

From 1996 through 1997, site preparations were made to support full scale decommissioning efforts. Support Systems such as temporary power, compressed air, HEPA filtered exhaust ventilation and lighting were installed. The Decommissioning Support Facility (DSF) was erected south of the CV and was physically connected to the CV.

The NRC approved the start of full scale decommissioning in April 1998 and operations began in May 1998. Up to that time, selected loose material, spare components, asbestos insulation and electrical components had been removed with the NRC's permission. Following approval in April 1998, the main focus of decommissioning efforts was on making all necessary preparations for the removal of the nuclear steam supply system components, namely the reactor pressure vessel, the single steam generator, the pressurizer and the main coolant pump.

The SNEC Large Component Removal Project (LCRP) was completed November 22, 1998. This involved the preparation, removal, packaging, shipment and disposal of the SNEC Facility pressurizer, steam generator, and reactor pressure vessel. All three vessels were shipped as low specific activity (LSA) packages "or equivalent" under 49 CFR 173. The radiological aspects of the shipment met the "normal conditions of transport" as defined by 49 CFR 173. The shipment of these components removed over 85% of the estimated site radioactive material inventory.

Following removal and shipment of the SNEC Facility large components, decommissioning activities focused on the removal and shipment of the remaining permanent mechanical and electrical equipment, systems, and components. This work was completed by May of 1999. All permanent mechanical and electrical systems and components have been removed and shipped off site for processing/disposal in accordance with all applicable regulations. The only systems are the floor drains in the CV and small piping system sections where they penetrate walls, floors and ceilings and the site storm drains. The piping remnants will be either remediated or removed for disposal. Site storm drains have been radiologically characterized and will be included in the Final Status Survey.

Since May 1999, the focus has been on CV concrete remediation work. As of the date of this update, approximately 75% of the concrete surfaces in the CV have had their surfaces scabbled to remove a thin layer of concrete and the associated surface layer of contamination. In addition to surface scabbling, more aggressive techniques are being employed in areas of cracks, penetrations, and degraded concrete conditions.

1.3.2 SAXTON NUCLEAR EXPERIMENTAL CORPORATION FACILITY DESCRIPTION

1. GENERAL FEATURES

A. Saxton Nuclear Experimental Corporation Facility Site Layout

The Saxton Nuclear Experimental Corporation (SNEC) Facility Site is shown on Fig. 1-1. The site is located about 100-miles east of Pittsburgh and 90-miles west of Harrisburg in the Allegheny Mountains three-fourths of a mile north of the Borough of Saxton in Liberty Township, Bedford County, in Pennsylvania. The site is on the north side of Pennsylvania Route 913.

The SNEC Facility was built on the east side of the Saxton Steam Generating Station (previously demolished) owned by the Pennsylvania Electric Company (Penelec), (one of the three SNEC owners). The SNEC Facility site is entirely contained within the Penelec site that comprises approximately 150 acres along the Juniata River. See Fig. 1-2.

The SNEC Facility site consists of the 1.148 acre tract deeded to SNEC from Penelec on which is located all of the structures, systems and components described below. In addition, on Penelec property immediately adjacent to the SNEC site are temporary facilities to support the decommissioning of the site. These include work crew, restroom, tool and office trailers, material staging and lay-down areas and vehicle parking areas etc.

The major permanent structures, systems and components are described in the following sections.

B. Containment Vessel Arrangement

The Containment Vessel (CV) encloses that part of the nuclear facility that contains the reactor vessel, main coolant and certain other radioactive auxiliary systems. The CV was designed to prevent the escape of vapor and fission products to the atmosphere in the unlikely event of a break in the high-pressure equipment. It is the only remaining prominent, original plant structure on the site.

The vessel is a self-supporting, vertical, cylindrical steel vessel with a hemispherical head at the top and an elliptical head at the bottom. It is 50 feet in diameter and has an overall height of 109

feet, 6 inches. The bottom of the vessel is located 50 feet, 4 inches below grade with the bottom head embedded in concrete.

The CV is divided into five general areas. These are the general operating area, the reactor compartment, the primary compartment, the auxiliary compartment and the control rod compartment. These areas are formed with concrete walls that provide shielding between the various compartments. All areas except the general operating area are located in the below grade portion of the vessel. The general arrangement of the compartments and the equipment within them is shown on Figures 1-3 and 1-4.

The major portion of the operating floor is located at an elevation of 812 feet, one foot above the grade elevation of 811 feet. Normal access to the containment vessel is made at this elevation. The portion of the operating floor that covers the primary compartment is located at an elevation of 818 feet. Access to the reactor compartment and associated storage well is provided by a temporary stairway installation through the 812′ elevation floor opening, which was created when the concrete shield slabs were removed. The equipment access opening is also located at elevation 812 feet. This opening was disabled following final plant shutdown.

The emergency exit hatch has been removed and sealed. The access hatch barrel has been removed. A new inner door assembly has been installed at this location which now serves as an emergency exit area.

All permanent plant equipment described is shutdown and disabled with the exception of the 20-ton rotary bridge crane. All permanent electrical systems have been deenergized and removed. All liquid systems have been drained and removed with the exception of small remnant sections that pass through walls. All of the described systems and components are scheduled to be removed and disposed of as part of the facility decommissioning. All of the described structures are scheduled to be removed and disposed of as part of the facility decommissioning except for the portions that are greater than three feet below grade and are permitted to be released under the applicable radiological release criteria.

The reactor compartment housed the reactor vessel, spent fuel rack, and demineralizer vessels. All new and spent reactor fuel was removed from the facility following plant shutdown in 1972.

The primary compartment housed the steam generator, main coolant pump and pressurizer. The regenerative and non-regenerative heat exchangers were also located in this compartment.

The auxiliary compartment, which is divided into three levels, housed various auxiliary system equipment such as heat exchangers, pumps and tanks. The shutdown cooling heat exchanger and pumps, discharge tank and pumps, and sump pumps were located in the bottom section of the auxiliary compartment.

The control rod compartment is a small room located below the reactor vessel that housed the control rod drive mechanisms and air-handling unit.

2. MAIN COOLANT SYSTEM

A. Function

This system has been removed.

B. General Description

This system has been removed.

C. Reactor Vessel

This component has been removed.

D. Steam Generator

This component has been removed.

E. Main Coolant Pump

This component has been removed.

F. Coolant Piping and Fittings

These components have been removed.

3. PRESSURE CONTROL AND RELIEF SYSTEM

A. Function

This system has been removed.

B. Description

This system has been removed.

C. Components

1. Pressurizer

This component has been removed.

2. Discharge Tank

This component has been removed.

3. Discharge Tank Drain Pumps

These components have been removed.

4. PURIFICATION SYSTEM

A. Function

This system has been removed.

B. Description

This system has been removed.

C. Components

1. Regenerative Heat Exchanger

This component has been removed.

2. Non-Regenerative Heat Exchanger

This component has been removed.

3. Demineralizers

These components have been removed.

4. Filter

This component has been removed.

5. COMPONENT COOLING SYSTEM

A. Function

This system has been removed.

B. Description

This system has been removed.

C. Components

1. Component Cooling Heat Exchangers

These components have been removed.

2. Component Cooling Pumps

These components have been removed.

6. SAMPLING AND LEAK DETECTION SYSTEM

A. Function

This system has been removed.

B. Description

1. General

This system has been removed.

2. Main Coolant Sample

This system has been removed.

3. Pressurizer Vessel Sample

   This system has been removed.

4. Purification Demineralizer and Boric Acid Demineralizer Inlet Sample

   This system has been removed.

5. Purification Demineralizer and Boric Acid Demineralizer Outlet Sample

   This system has been removed.

6. Storage Well Demineralizer Samples

   This system has been removed.

7. Reactor Vessel Shell Leak

   This system has been removed.

8. Reactor Vessel Gasket Leak

   This system has been removed.

9. Gasketed Closure Leak-offs

   This system has been removed.

10. Valve Stem Leak-offs

    This system has been removed.

11. Reactor Vessel Seal Weld Leak

    This system has been removed.

C. Components

1. Sample Coolers

   These components have been removed.

7. SHUTDOWN COOLING SYSTEM

A. Function

This system has been removed.

B. Description

This system has been removed.

C. Components

1. Shutdown Cooling Heat Exchanger

These components have been removed.

2. Shutdown Cooling Pumps

These components have been removed.

8. SAFETY INJECTION SYSTEM

A. Function

This system has been removed.

B. Description

This system has been removed.

C. Components

These components have been removed.

9. STORAGE WELL SYSTEM

A. Function

This system has been removed.

B. Description

This system has been removed.

C. Components

1. Storage Well Heat Exchanger

This component has been removed.

2. Demineralizer

This component has been removed.

3. Pre-filter

This component has been removed.

4. Post-Filter

This component has been removed.

5. Storage Well Pumps

These components have been removed.

10. VENTS AND DRAINS SYSTEM

A. Function

The vents and drains system is deactivated, disabled and drained and it performs no function. It is not needed for any safety-related purpose. The system is scheduled to be removed and disposed of as part of the plant decommissioning.

B. Description

The only remaining portions of this system are the floor drains and small drain piping segments that are embedded in floors, walls and ceilings. All remaining components are located within the Containment Vessel.

12. SHIELDING

A. Function

The radiation shielding no longer performs its original function of permitting CV entry shortly after reactor shutdown and to provide sufficient shielding to allow routine maintenance and refueling operations. The shielding does assist in keeping doses to the work force as low as reasonably achievable (ALARA). The shielding which is above three feet below grade will be removed as part of the decommissioning process. Shielding below this level which can meet the applicable release criteria will remain.

B. General

The radiation shielding was designed to provide biological protection wherever a potential health hazard from radiation existed. The shielding is divided arbitrarily into two categories according to function. These are (1) primary shield, and (2) secondary shield. Figures 1-3 and 1-4 show the general shielding layout.

C. Primary Shield

This consists of a reinforced ordinary concrete ($\rho = 2.3$) structure, immediately adjacent to the exterior of the neutron shield which served to attenuate radiation from the reactor to the same level as the radiation emanating from the main coolant system. The bottom portion of the shield is an integral part of the main structural concrete support for the reactor vessel.

The radial shield consists of a 5-foot thick concrete wall separating the reactor area from the primary equipment area, and a 1.5-foot thick concrete annular wall extending from the main structural concrete to the operating deck above the reactor.

D. Secondary Shield

The secondary shield consists of reinforced ordinary concrete ($\rho = 2.3$) and utilizes the earth surrounding the containment vessel below grade elevation. The vertical portion of the shield, inside the containment vessel, consists of an ordinary concrete wall, separating the primary from the auxiliary compartment. This wall is 3.5 feet thick from the operating deck to elevation 800'-0", below which it tapers to 2.5 feet. In addition, a 1.5-foot thick annular concrete wall surrounds the entire plant below grade within the containment vessel.

Supplementary secondary shielding is provided external to the containment vessel. The reactor compartment is surrounded by a 3-foot thick concrete wall extending from 5 feet below grade to a point 3 feet above grade. The pipe tunnels outside the reactor and primary compartments are shielded by 3-foot and 2-foot thick slabs respectively.

The operating floor over the primary compartment consists of a 3.5-foot thick concrete shield.

The control rod room, which housed the control rod drive mechanisms, was shielded by an iron-shot filled tank. This shield has been removed.

13. CONTAINMENT VESSEL

A. General

The containment vessel is a vertical cylindrical steel vessel with a hemispherical head at the top and an elliptical head at the bottom. It is 50 feet in diameter and has an overall height of 109 feet, 6 inches. The bottom of the vessel is located 50 feet, 4 inches below grade with the bottom head embedded in concrete.

The portion of the containment vessel wall that is below grade is provided with an inner wall of reinforced concrete that is 1.5 feet thick. The primary purpose of this wall is to reinforce the below grade cylindrical portion of the containment vessel shell against external pressure due to ground water and back-fill and to contribute to the support of the concrete operating floor. One-half inch thick premolded, expansion material is provided between the steel shell and the inner concrete wall to a depth 6 feet below grade to provide for differential expansion between the steel shell and the inner concrete wall.

The general arrangement of the containment vessel is shown on figures 1-3 and 1-4.

B. Function

1. Containment Isolation

The containment vessel is no longer needed to perform its original function of containment isolation. Containment

isolation is no longer required to protect against possible overpressure as all fuel has been removed from the facility and all liquid systems are drained and vented. All original energy sources have been removed.

2. Containment Integrity

Containment integrity is maintained to serve as a barrier to prevent the inadvertent release of airborne and loose surface radioactive materials and to prevent unauthorized intrusions. The CV is equipped with intrusion alarms to prevent and detect unauthorized entry. The requirement to maintain containment integrity is limited to those features of the Containment Vessel liner required to serve as contamination and intrusion barriers.

C. Design Features and Fabrication

The design and fabrication of the vessel was in accordance with the ASME Code and the latest applicable code cases. Steel plate and all other pressure parts of the vessel conform to ASTM Specifications A-201 Grade B Firebox Quality and in addition are heat-treated to ASTM A-300 Specifications for plates and A-350 Specifications for forgings as covered in Code Case 1272N. All welding, stress relief, radiographing, and other inspection and test procedures used, conformed to the requirements of Section VIII of the ASME Boiler and Pressure Vessel Code as modified by Code Case 1272N. Shell welds were fully radiographed, double welded butt joints. All welds, such as those around nozzles and opening frames were examined for cracks by magnetic particle or fluid penetrant methods of inspection. All doors, nozzles, and opening frames were pre-assembled into shell plates and stress relieved as complete assemblies before they were butt-welded into the shell. Openings were designed and reinforced so that all parts are at least as strong as the shell itself. A refined coal tar enamel (Bitumastic) is applied to the outside surface of the below grade portion of the vessel that is not embedded in concrete.

The pertinent characteristics of the containment vessel are listed in Table 1.3-6.

The vessel will withstand an 80 mph wind load (20 psf) applied to the vertical projection of the above grade portion of the vessel and

a snow load of 25 psf applied to all portions of the hemispherical head with a slope within the range of 0 to 50%.

D. Components

1. Personnel Access Air Locks

Two personnel access air-lock assemblies are mounted in the vessel shell, slightly above grade level. One assembly is for normal personnel access to and from the vessel and presently contains a single door. The second provided an emergency exit from the vessel. The emergency exit air lock, which contains both an inner and an outer door, was disabled following final plant shutdown. Both hatch barrel assemblies will be removed during decommissioning. Each door assembly consists of pressure-tight latched door(s) mounted in a cylindrical section. Each door was designed to withstand the design pressure or vacuum within the vessel without leakage, and opens toward the inside of the vessel so that the vessels design pressure will help to form a seal. The door for normal access is 2 feet, 6 inches by 6 feet, 8 inches and the doors for emergency escape are 2 feet, 6 inches in diameter.

2. Equipment Access Opening

One flanged and bolted access opening for the removal of reactor plant components is mounted in the vessel shell slightly above grade level. The opening was designed to withstand the design pressure or vacuum within the vessel and will utilize any internal vessel pressure to help effect a leak-proof seal. The opening is 6 feet in diameter.

3. Piping and Ventilating Penetrations

All piping and ventilating penetrations are below grade except for those penetrations for ventilating air. The penetrations for lines which operated at a temperature below 250 degrees F consist of a section of the carbon steel or stainless steel pipe system welded to the vessel plate and stress relieved in the fabrication shop. The penetrations for 3 inch safety injection lines and lines that operated at a temperature greater than 250 degrees F utilize thermal

sleeves that are sealed to the pipe system by means of an expansion joint or a solid metal end connection.

4. Dome Access Openings

During the Large Component Removal Project two circular openings were cut into the Containment Vessel Dome. The first opening is approximately 10-feet in diameter and is located over the primary compartment and was utilized during pressurizer and steam generator removal operations. The second opening is approximately 15-feet in diameter and is located over the reactor compartment and was utilized during reactor pressure vessel removal operations. A four-foot by four-foot, square rigging hatch is located in the approximate center of the 15-foot diameter opening. The rigging hatch is secured by a locked and gasketed door. Both circular openings are independently supported from externally mounted stiffeners and the gaps between the Containment Vessel and the openings are sealed with a weather-resistant caulking material.

14. MISCELLANEOUS STRUCTURES, SYSTEMS AND COMPONENTS

A. Reactor Compartment and Storage Well

A rectangular opening approximately 27 feet, 6 inches by 13 feet can be provided in the operating floor above the reactor compartment and associated storage well. This space formerly contained seven pre-cast 20-ton concrete shield slabs. These slabs have been removed and shipped off site for disposal. The east-end of the compartment forms the former spent fuel storage area.

The concrete surfaces of the reactor compartment and storage well are lined with a Series-300, four-coat, catalized phenolic protective lining made by the Carboline Corporation. An outer coating of epoxy paint covers the protective lining. Removal of this material is in progress.

B. Equipment, Tools and Structures

1. Rotary Bridge Crane

A 20-ton rotary bridge crane with a single, two-speed hoist, having a 60-foot lift, is mounted on the containment vessel

shell. The hoisting speeds are 5 and 15 feet per minute. The low speed permitted safe handling of the reactor vessel head and core components. The higher speed was for raising or lowering tools and equipment into shielded compartments and is the normal operating speed. The traverse speed of the trolley is 25 feet per minute. The bridge will rotate up to 370 degrees at a traverse speed at the rail, of 25 feet per minute.

C. Make-up and River Water Cooling

1. Function

This system has been removed.

2. Description

This system has been removed.

15. DECOMMISSIONING SUPPORT STRUCTURES, SYSTEMS & COMPONENTS

A. Decommissioning Support Facility

This pre-engineered facility was constructed to support decommissioning operations at the site. It consists of a steel "Butler" type building approximately 40 feet by 60 feet, on a slab construction which is located against the Containment Vessel (CV) on the south side. The building consists of three structures; the main Decommissioning Support Building (DSB), the Material Handling Bay (MHB) and the Personnel Access Facility (PAF). Various doors are provided and an approximate 10-foot wide by 15-foot high opening was cut out of the Containment Vessel liner coincident with the Material Handling Bay, to facilitate removal of components to be packaged and prepared for shipment. A 10-ton hoist (rated at 8 tons) is installed between the CV and MHB to aid in the removal of these components.

The Material Handling Bay (MHB) serves as an Exclusion Area boundary and is equipped with intrusion alarms to prevent and detect unauthorized entry.

B. Containment Vessel Decommissioning Ventilation System - Design

Since the original, permanent plant ventilation systems have been removed, a temporary ventilation system has been installed.

1. Function

   a. Provide for worker comfort by minimizing CV temperature extremes.

   b. Minimize potential for confined space restrictions by providing sufficient air volume changes.

   c. Reduce CV interior Radon concentrations.

   d. Provide sufficient face velocity at the CV/DSB opening to meet the Containment Integrity requirements as given in Section 13.B.2.

   e. Provide for filtration and quantification of radioactive airborne effluent releases.

2. General Description

   The system consists of ductwork installed inside the CV to provide suction from above and below the operating floor (818′ elevation). Outside the CV, a high efficiency particulate air (HEPA) filter and housing, a 6500-CFM nominal flow fan unit, an effluent radiation monitor, and associated duct-work, controls, instrumentation and alarms are installed. Refer to Figure 1-8.

3. Components

   a. 6500 – CFM nominal flow fan, 230V/480V/3ph/60Hz, 10 BHP motor.

   b. 6500 – CFM pre-filter/HEPA filter housing with six, 24″ x 24″ pre-filters and six, 24″ x 24″ Nuclear Grade HEPA filters rated for >99.97% removal efficiency.

   c. Effluent radiation monitor, Eberline Model AMS-3 provided with isokinetic sampling of the air stream.

d. Two smoke detectors are installed in the CV suction duct.

e. HEPA filter differential pressure instrumentation

f. Alarms and indication for:

(1) Low HEPA Filter Differential Pressure

(2) Smoke/Fire

(3) Radiation Monitor Alarm

(4) Low Shed Temperature

(5) Radiation Monitor Failure

(Note: Alarms 2, 3 and 5 provide for automatic trip of the ventilation fan)

4. Design

The ventilation system consists of one exhaust fan drawing air from the upper and lower portion of the CV. The exhaust fan is a centrifugal unit that is provided with pre-filters and HEPA filters for the removal of airborne particulates in the exhaust air. There are no radioactive gases remaining at the facility. To provide indication and monitoring of radioactive releases, a radiation monitor, with isokinetic sampling, is installed downstream of the HEPA filter unit. The filtration unit was designed and constructed in accordance with ANSI N509 and tested per ANSI N510. The exhaust fan and filtration units are located outside the CV on the north side and are ducted to the CV using the existing 17-inch CV ventilation penetration. The duct penetration is thoroughly sealed to prevent exfiltration of airborne radioactive materials. The make-up air for the exhaust comes from the Decommissioning Support Building through the roll-up doors or gravity type (counter-balanced) wall louvers. The approximate face velocity at the opening between the DSB and the CV is 45 feet per minute. This flow arrangement provides for ventilation of the DSB and CV from low to high contamination areas and provides sufficient face velocity at the DSB/CV opening to meet the containment integrity goals

(i.e. prevent the inadvertent release of radioactive contamination or airborne radioactivity).

The flow path of the air is from the DSB wall louvers (or roll-up doors), through the DSB, through the CV/DSB opening and across the CV operating floor. From the operating floor, the air will sweep across the CV storage well opening to be exhausted through exhaust registers attached to a plenum, which runs from elevation 832' to 811'-6". A duct connection is provided inside the CV on the inlet plenum to allow connection of a flexible duct hose for local ventilation needs. The plenum then connects to the existing 17-inch penetration. Outside the CV, the 17-inch penetration is provided with an isolation damper and is connected to the filtration unit. Air flows from the filtration unit to the fan and is exhausted via a short stack. The stack height and arrangement was selected based on industrial safety considerations and to prevent the intrusion of debris. The stack height is not relevant to radioactive release criteria for this situation.

The system capacity was sized to provide sufficient face velocity at the CV/DSB opening to ensure airflow into the CV and to provide adequate turnover of the CV air volume per industry standards. The face velocity of approximately 45 feet per minute and CV air volume change rate of approximately three per hour, meet these goals.

The alarms provide indication locally and at the GPU Energy Dispatch Facility, which is manned 24 hours per day. Administrative controls are provided to ensure proper notification and actions are taken in the event of an alarm.

5. Surveillances

The following surveillances/tests are required when the system is operational:

a. Annual verification of HEPA filter efficiency in accordance with ANSI N510.

b. Semi-annual calibration of the radiation monitor in accordance with established procedures.

c. Annual calibration of HEPA filter differential pressure instrumentation with established procedures.

d. Quarterly functional checks of all alarms in accordance with procedures.

e. Weekly functional check of the effluent radiation monitor in accordance with procedures.

16. TABLES

TABLE 1.3-1

REACTOR VESSEL CHARACTERISTICS

DELETED – This component has been removed.

TABLE 1.3-2

STEAM GENERATOR CHARACTERISTICS

DELETED – This component has been removed.

TABLE 1.3-3

PRESSURIZER CHARACTERISTICS

DELETED – This component has been removed.

TABLE 1.3-4

DISCHARGE TANK CHARACTERISTICS

DELETED – This component has been removed.

TABLE 1.3-5

CHARACTERISTICS OF ORIGINAL CONTAINMENT VESSEL VENTILATING EQUIPMENT

DELETED – This equipment has been removed.

TABLE 1.3-6

CHARACTERISTICS OF CONTAINMENT VESSEL

Vessel Diameter - feet	50
Tangent Length – feet	72
Original Internal Design Pressure – psig	30
Original Internal Design Temperature – degrees F	250
Maximum Wheel Load from Rotary Crane – pounds	50,000
Number of Crane Wheels – quantity	4
Uniform External Pressure due to Vacuum Within the Vessel – psig	0.5
Gross Volume – cubic feet	190,200
Net Volume (approximate) – cubic feet	141,500

17. LIST OF FIGURES

Figure 1-1
SNEC FACILITY SITE LAYOUT

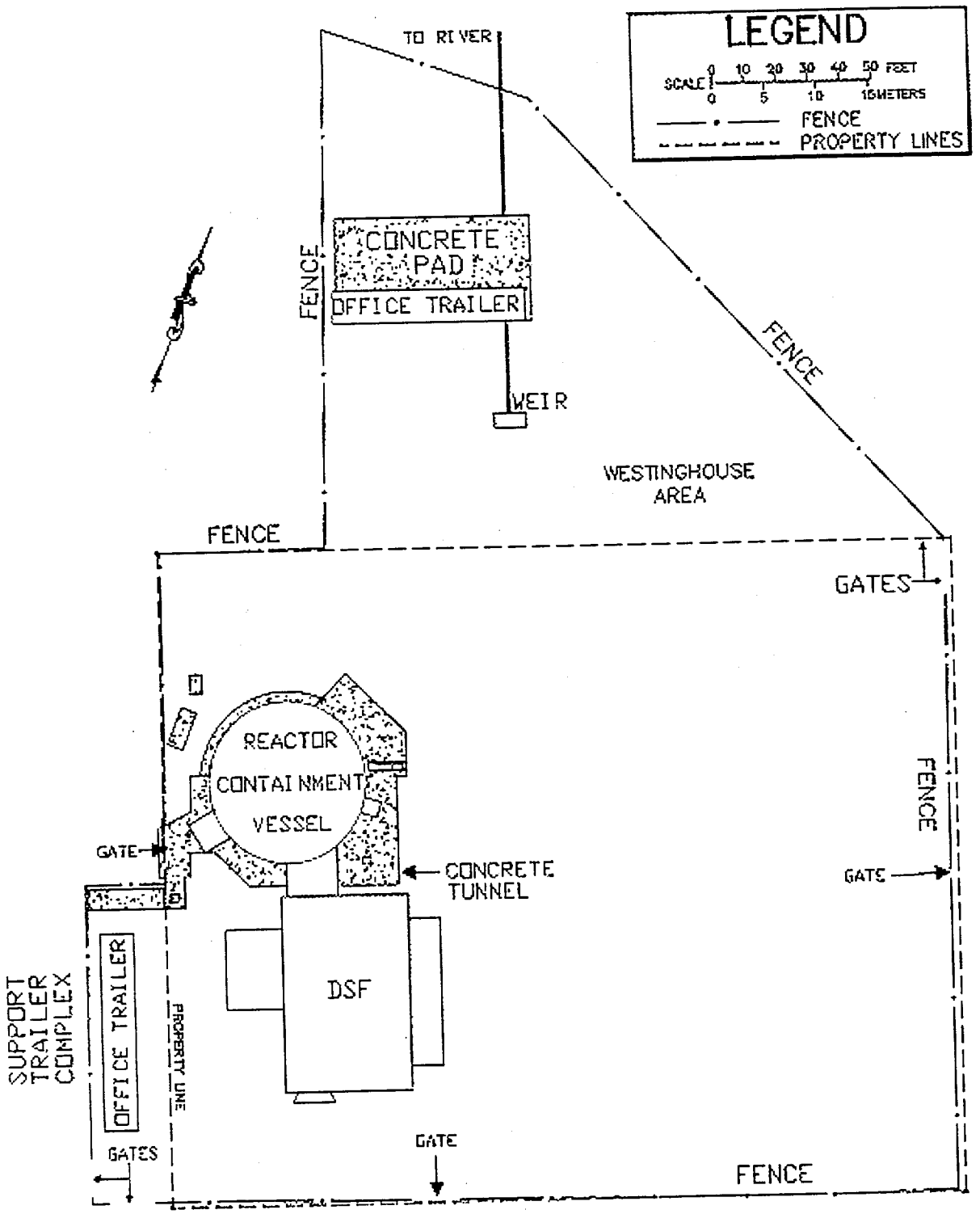

Figure 1–2

PROPERTY MAP – SAXTON SITE

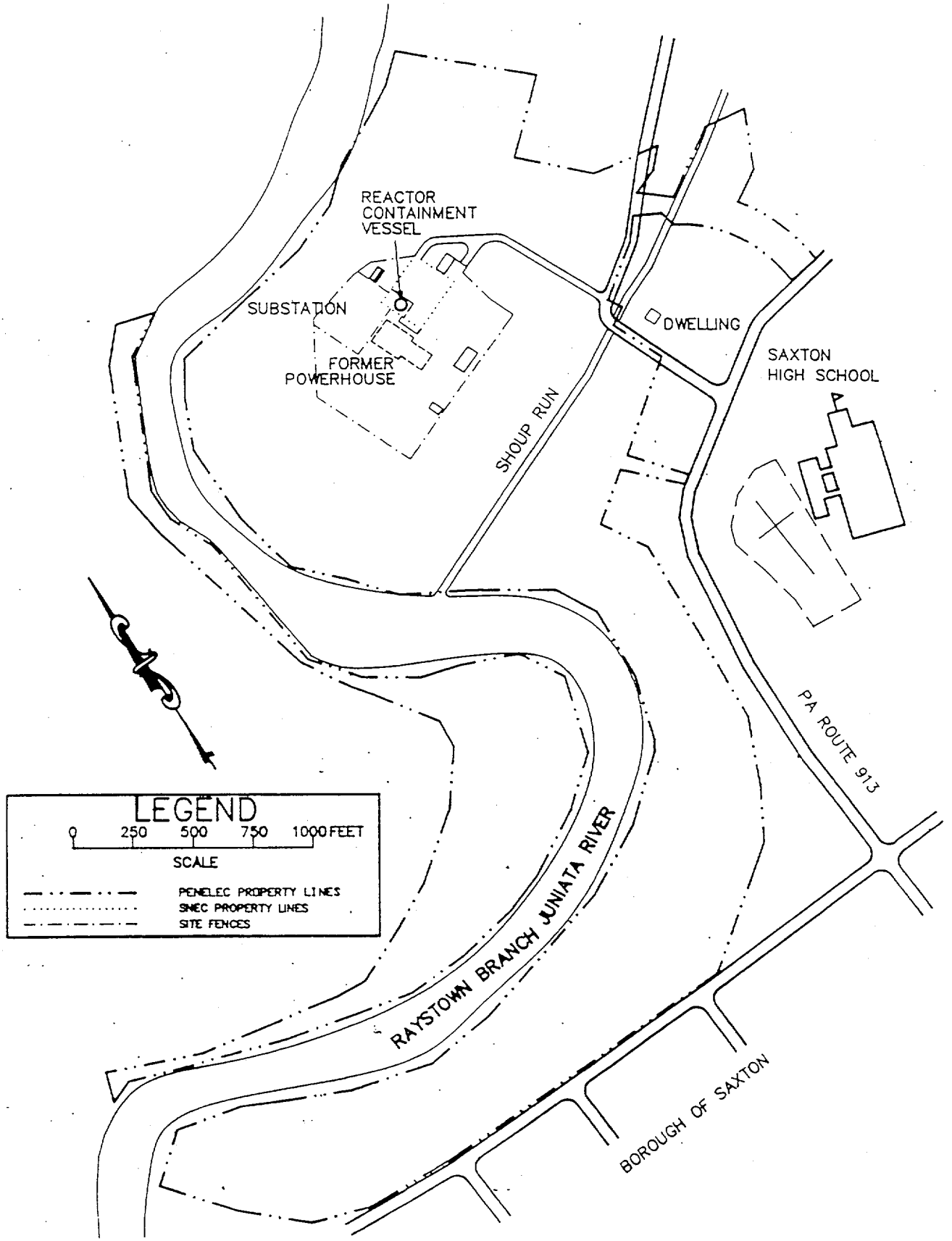

Figure 1-3

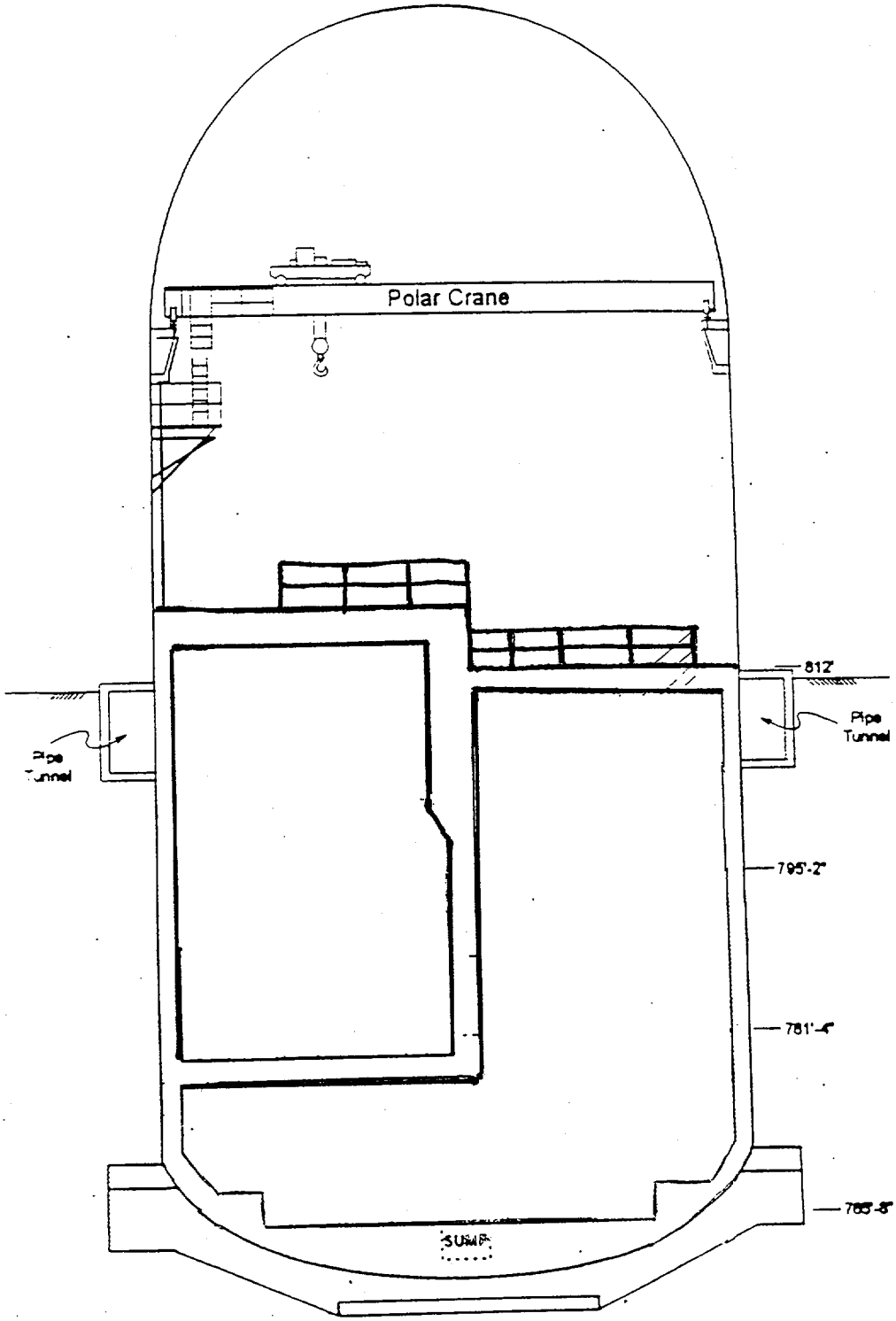

Containment Vessel, Sectional View
(Looking North)

No Scale

Figure 1-4

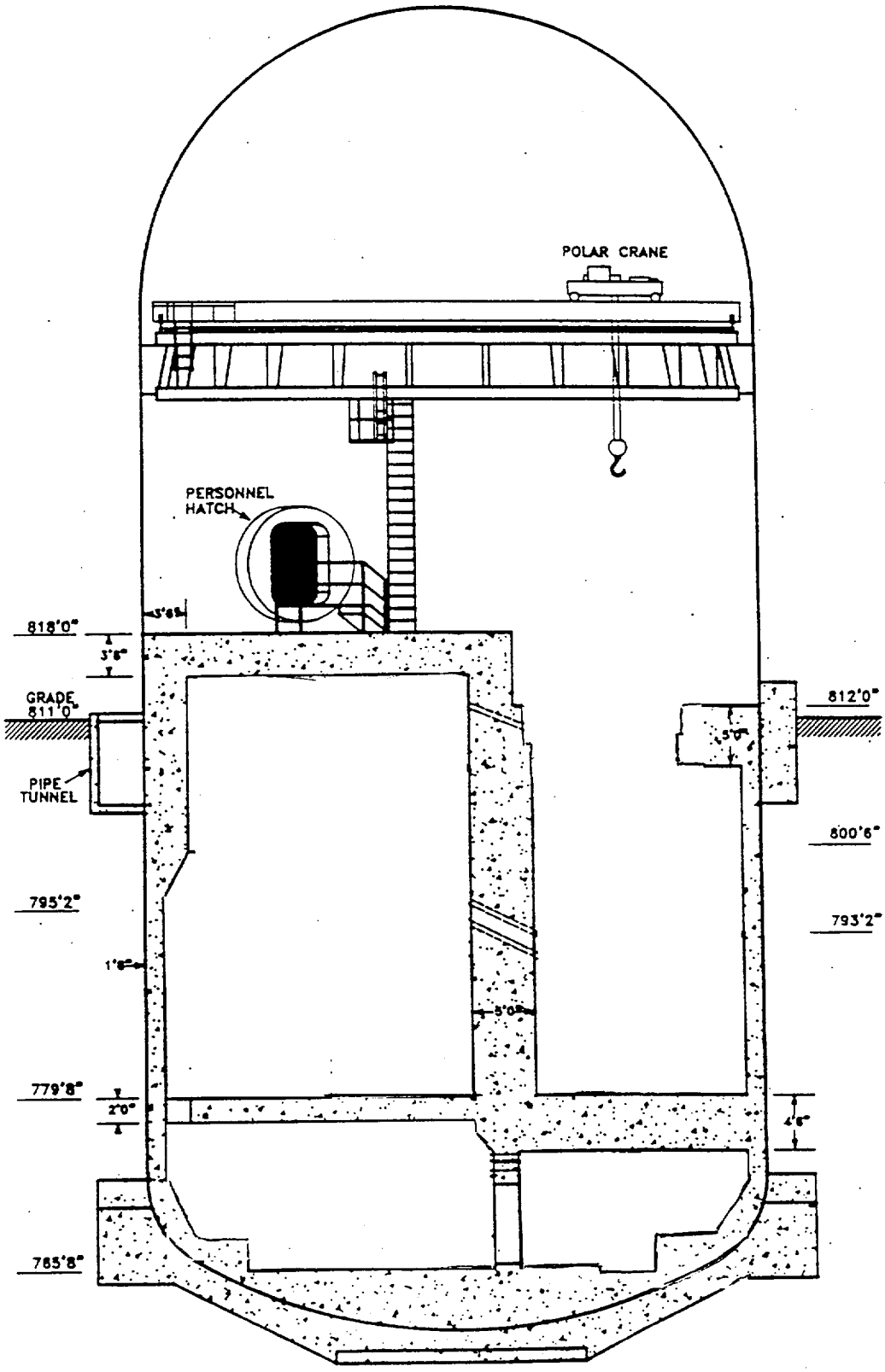

Containment Vessel, Sectional View
(looking West)

Figure 1-5

Reactor Vessel Cross Section

DELETED

Figure 1-6

Steam Generator

DELETED

Figure 1-7

Pressurizer

DELETED

SNEC FACILITY VENTILATION SYSTEM

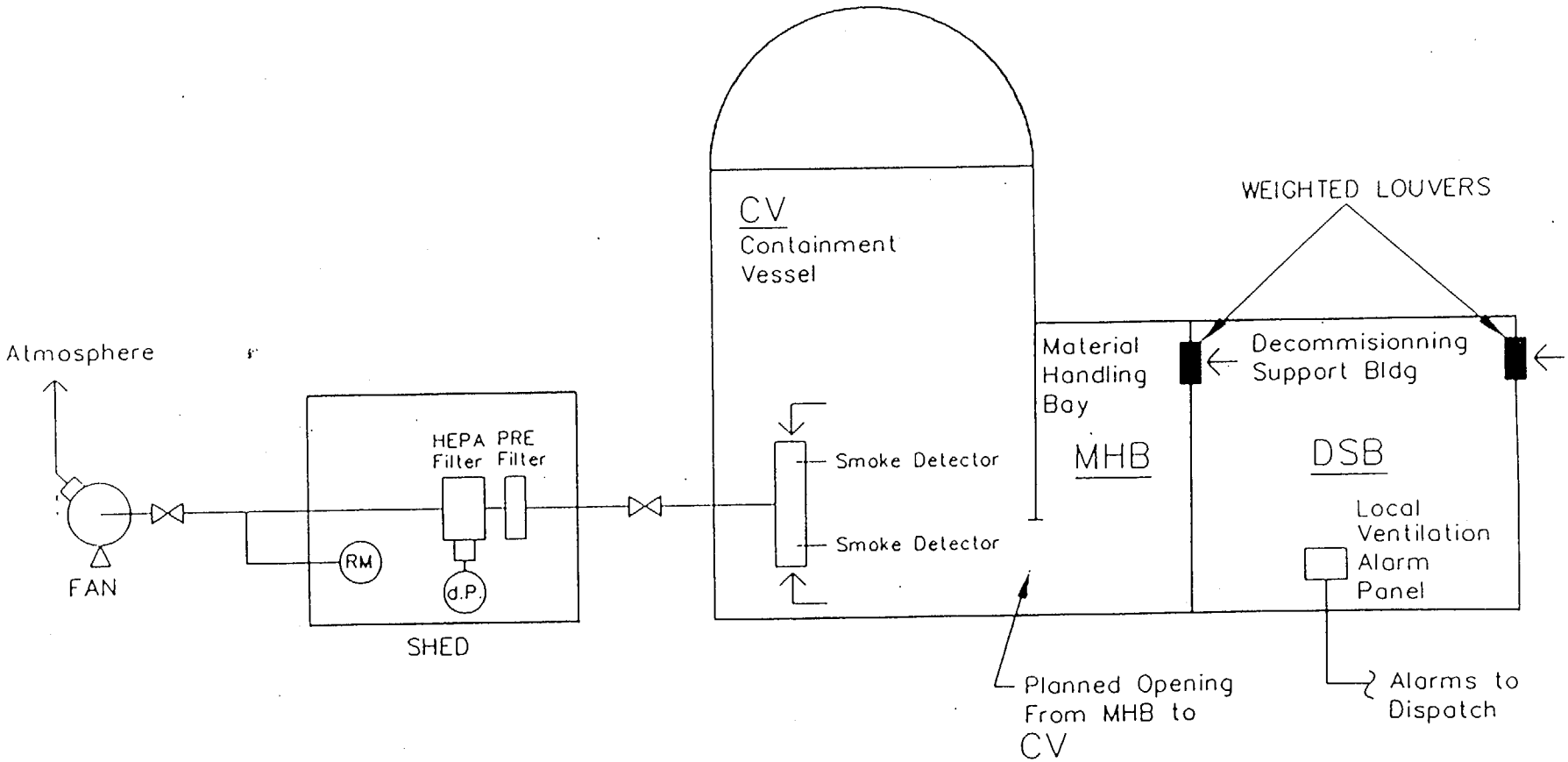

(dP) DIFFERENTIAL PRESSURE – USED FOR LOW FLOW ALARM
SYSTEM FLOW – NOMINAL 6500 CFM
HEPA – 99.97% EFFICIENT – TESTING IN ODCM
(RM) RAD MONITOR – SURVEILLANCE/SETPOINT IN ODCM

Figure 1-8

Cad File: S1A-SKC-1009

1.4 CURRENT RADIOLOGICAL CONDITIONS

Site specific radiological and environmental data was obtained in 1995 as part of the Saxton Site Characterization Plan (Reference 1) in order to support the development of the SNEC Facility Decommissioning Plan. The scope of this characterization plan extended over areas of the facility that may have become internally or externally contaminated or activated during the facility's operating history. Subsequent characterization has taken place from 1996 to present and will continue through remediation and during final status survey activities associated with License Termination. Results of the characterization have been used to determine the current radiological status of the facility.

The data obtained will be used to determine effective and appropriate decontamination and dismantling techniques and activity sequencing to support decommissioning. This data was also used for planning radioactive material disposal, assessing potential hazards during decommissioning an decontamination work, determining ALARA controls, and accurately scheduling and estimating the cost of the overall program.

Radiological samples and information acquired during characterization included locations, areas, and activity levels of structural surfaces, depth and activity levels of containment penetration into porous or cracked surfaces, location, volume, and activity levels of contaminated soil, location, surface areas, volumes, and activity levels in piping systems and contaminated equipment, calculation and confirmation of activity levels induced by activation in reactor areas and associated components, waste classification of contaminated materials, and general area and hot spot radiation levels.

Environmental characterization carried out under the characterization plans has determined the radiological characteristics of potentially contaminated soil on the site. In addition, the characterization determined the location and type of asbestos that was used as thermal insulation. A Total Metals Analysis was performed to determine the presence and concentration ratio of lead, chromium, and cadmium metal paint constituents in painted surfaces. A complete Toxicity Characteristics Leaching Procedure (TCLP) and an inorganic analysis was performed on selected sediment and sludge samples.

These survey and sampling program results are presented in detail, in the SNEC Site Characterization Report (Reference 3) and in the SNEC Facility License Termination Plan (reference 12).

1.5 RADIOLOGICAL CONTROLS

The Radiological Controls Program at the SNEC facility will be implemented to control radiation hazards to avoid accidental radiation dose, maintain doses within the regulatory requirements, and also maintain doses to the workers and the general population as low as reasonably achievable (ALARA). The philosophies, policies, and objectives are based on, and implement, the regulations of the NRC, as contained in Title 10 of the Code of Federal Regulations (10 CFR) Parts 19, 20, 50 and 71, and the appropriate Regulatory Guides. In addition, the Radiological Controls Program will support the decommissioning effort by providing radiological data and the documentation of the site release surveys.

All decommissioning work will be accomplished in accordance with the SNEC Radiation Protection Plan (Reference 2).

The SNEC facility will be dismantled under the oversight of GPU Nuclear. GPU Nuclear continues to operate with, and support, the ALARA concept. The SNEC facility ALARA procedure incorporates the ALARA policies and concepts developed by GPU Nuclear in meeting ALARA obligations at its other nuclear facilities. SNEC facility decommissioning management and supervisory personnel will continue to enforce high standards with respect to controlling personnel dose and dose rate, as well as other radiological monitoring requirements.

1.6 HAZARDOUS MATERIALS

The generation, storage, transportation and disposal of hazardous waste are regulated by the Pennsylvania Department of Environmental Protection (PADEP) under Pennsylvania's Solid Waste Management Act (35 P.S. 6018.101 et seq.). Decommissioning of the facility may be expected to generate very small amounts of hazardous waste. Decontamination and dismantlement activities primarily utilize non-hazardous chemicals or mechanical processes. Potential sources of hazardous waste include lead-based paint that was used to cover much of the painted surfaces of the facility. Other minor sources of hazardous waste may be generated during decommissioning, however it is expected that the amount of waste generated will be less than the limit for a "small quantity generator" under the Pennsylvania hazardous waste regulations. All generated hazardous waste will be managed in accordance with the PADEP hazardous waste

management regulations. Should any hazardous waste also contain radioactive material, then the "mixed waste" will be managed and disposed of in accordance with the appropriate NRC and U.S. Environmental Protection Agency regulations and agreements.

Since the SNEC facility was built in the early 1960's, it was presumed that a majority of insulation materials used during the construction contain some percentage of asbestos. The results of sample analyses taken from various locations during a comprehensive asbestos sampling program confirmed this assumption. Almost all bulk insulation samples contain either Chrysotile or Amosite asbestos. A comprehensive asbestos abatement program, managed in accordance with appropriate State and Federal regulations, was completed during 1997.

It was also presumed that all painted surfaces would contain some quantity of lead. During the asbestos sampling period, paint samples were also collected for lead analysis. Most of the paint samples taken were radioactive and could not be sent to a typical commercial lead analysis laboratory. The one sample that could be analyzed had a lead content of about 1.7%. This sample was collected from paint covering the containment vessel, external steel shell. Two composite samples of paint from miscellaneous locations on internal surfaces of the containment vessel were collected and the analytical results confirmed the presence of lead.

If hazardous chemicals are used and become part of the liquid effluent from the SNEC facility, the effluent is regulated by PADEP National Pollutant Discharge Elimination System (NPEDS) regulations. Should the use of hazardous materials impact atmospheric releases from the SNEC facility, the applicable PADEP air quality program requirements will be implemented. Inadvertent spills, discharges and releases of hazardous materials to the environment will be cleaned up and spill residues will be managed in accordance with the PADEP pollution prevention requirements.

The SNEC Facility Decommissioning Environmental Report (Reference 8), contains additional discussion regarding hazardous materials management and disposal. The SNEC Facility Environmental Report discusses hazardous materials compliance related to USEPA, NRC, OSHA, PA Department of Labor and Industry (PADOLI) and PADEP regulations.

1.7 RADWASTE DISPOSAL

Specific measures used to classify waste are addressed in GPU Nuclear radwaste procedures that have been developed to ensure compliance with 10 CFR 20, 10 CFR 61 and 49 CFR Parts 170-178. The waste classification and the volume of each waste class expected to be generated during decommissioning was identified during site characterization and the results documented in the PSDAR. Additional waste classification and volume information may result from additional remediation activities conducted during the license termination phase of the SNEC decommissioning.

The waste stream(s) resulting from the SNEC facility decommissioning is similar to that resulting from nuclear power plant operations and maintenance. There are no regulatory transportation issues specifically related to the decommissioning of the SNEC facility that are not provided for in existing procedures.

Existing GPU Nuclear procedures used for waste handling, processing and characterization will be used as required, with approval controls, throughout decommissioning. In addition, isotopic analyses, waste characterization computer codes and activation analyses are some of the methods which have been and will continue to be used to characterize the waste streams resulting from the SNEC facility's decommissioning. The procedures follow 10 CFR 20, 10 CFR 61, disposal site criteria, and other Federal and State regulations.

Radwaste shipping and handling will continue to be performed in accordance with the GPU Nuclear Operational Quality Assurance Plan (reference 10), applicable NRC and DOT regulations and plant procedures. Radioactive waste and material will be shipped either by truck including open and closed transport, trailer mounted shipping cask or by a combination of truck and rail. Shipments will be planned in a practical and efficient manner. Facility procedures will be used with appropriate quality oversight to ensure the shipments are in compliance with company procedures, regulations and the receiving site license. Packages, packaging and labeling for radioactive materials and waste will meet all applicable regulations and requirements.

2.0 RADIOLOGICAL SAFETY ANALYSIS

2.1 RADIONUCLIDE INVENTORY

2.1.1 PLANT SYSTEMS

All SNEC Facility plant systems have been removed with the exception of remnants of the Containment Vessel drain system piping that is embedded within floors, walls and ceilings and the concrete shielding elements.

2.1.2 REACTOR PRESSURE VESSEL AND INTERNALS

This equipment has been removed.

2.1.3 RADIATION DOSE RATE AND CONTAMINATION LEVELS

Approximately 99% of the SNEC Facility radionuclide inventory was contained within the steel structures of the reactor vessel and its internals, the steam generator, the pressurizer and the other plant systems, structures and components. The remaining radionuclides are within/on the concrete structural surfaces. Data collected from each of the areas of the facility was examined and the results presented in the SNEC Site Characterization Report (Reference 3). The remaining radionuclide inventory is presented in the SNEC Facility License Termination Plan (reference 12).

TABLE 2.1-1

REACTOR VESSEL/INTERNALS CURIE DETERMINATION

DELETED – This equipment has been removed.

TABLE 2.1-2

SYSTEM COMPONENTS WITH SIGNIFICANT RADIONUCLIDE INVENTORY

DELETED – This equipment has been removed.

2.2 RADIATION EXPOSURES DURING DECOMMISSIONING OPERATIONS

2.2.1 OFF-SITE AND UNRESTRICTED AREA EXPOSURE

GPU Nuclear continues to conduct a comprehensive radiological environmental monitoring program (REMP) at the SNEC facility to monitor radiation and radioactive materials in the environment. The information obtained from the REMP is available to determine the effects of the SNEC facility, if any, on the environment and the public. The results of the REMP to date indicate that the operation and maintenance of the facility has not had a significant radiological impact on the environment and the public.

Off-site radiological events related to decommissioning activities are limited to those associated with the shipment of radioactive materials. Radioactive shipments will be made in accordance with the applicable regulatory requirements. The facility's Radioactive Waste Management Program will ensure compliance with these requirements. Radioactive waste handling and shipping activities are subject to the GPU Nuclear Operational Quality Assurance Plan (OQAP) (reference 10) and applicable implementing procedures to assure they are conducted in a safe and controlled manner. Compliance with these requirements ensures that both the probability of occurrence and the consequences of an off-site event do not significantly affect the health and safety of project workers, the public or the environment.

Because there is no irradiated fuel stored at the site, there are no radioactive noble gases or radioiodines available for release from the facility. This precludes the possibility of accidental off-site radiological releases that could approach the protective action guidelines (PAG's) for the skin and thyroid. As a result, the PAG for total effective dose equivalent (TEDE) is the limiting criteria for decommissioning activities at the facility.

GPU Nuclear has analyzed the decommissioning activities described in the SNEC facility PSDAR (Reference 4) to ensure that they will not create the potential for accidental releases that could cause doses at the site boundary to be more than a small fraction of the EPA PAG's. Performing decommissioning activities in a manner that keeps off-site doses from even the most unlikely events at a small fraction of the EPA PAG's provides for the protection of the health and safety of the public without the need for protective actions.

Section 3.0 of this USAR for the SNEC facility analyzes a number of potential events, which could be postulated to occur during decommissioning activities and result in the release of radioactive materials.

The decommissioning activities evaluated include events with the potential for liquid and/or airborne radioactive releases.

The analyses of these events use very conservative approaches in treating the source terms, as well as in the methods of calculation. To the extent applicable, these analyses are consistent with approaches used in the NRC's examination of postulated accidents during the decommissioning of the Reference PWR (Reference 5).

The accident analyses demonstrate that no adverse public health and safety or environmental impacts are expected from accidents that might occur during decommissioning operations. The highest calculated dose to an individual located at the site boundary is 1.5 millirem to the whole body during postulated materials handling accident. The results of other on-site accidents are below this value. As a result, it is concluded that there are no significant radiological consequences to the general public from postulated credible accidents during the planned decommissioning operations at the SNEC facility.

2.2.2 WORKER EXPOSURE

Worker exposure has been considered from both the standpoint of exposure resulting from performance of decommissioning activities and that which could result from exposure during one of the postulated accident scenarios.

Estimated occupational exposure for decommissioning activities:

TASK	PERSON-REM
Asbestos Remediation (Actual)	2.97
System Dismantlement (Actual)	12.83
Large Component Removal (Actual)	7.38
Structure D&D	2.75
Waste Management	1.75
Miscellaneous Support Activities	2.75
Scaffolds and Shielding	5.75
Characterization	.75
TOTAL	**36.93**

The estimated maximum occupational Committed Effective Dose Equivalent (CEDE) and Committed Dose Equivalent (CDE) to the bone surface for each accident scenario is summarized below.

ACCIDENT TYPE	*CEDE	*CDE
Dropped Demineralizer Vessel	0.4	7.2
Fire in Combustible Waste	0.08	1.2
Oxyacetylene Explosion	0.04	0.7
Pipe Segmentation	0.02	0.3
Vacuum Filter Rupture	0.004	0.07
Low Pressure Gas Explosion	0.004	0.07

*All doses are in Rem

The calculation results are based on the conservative assumptions and dose conversion factors from the following references:

Saxton Nuclear Experimental Corporation Decommissioning Plan

NUREG/CR-0130, "Technology, Safety, and Costs of Decommissioning a Reference Pressurized Water Reactor Power Station", Volumes 1 and 2

Federal Guidance Report No. 11, US EPA 1988

The calculations are documented in GPU Nuclear Calculation RAF 6612-96-014.

During all decommissioning phases, the SNEC Facility Site Respiratory Protection Program is in effect. The SNEC Facility Site Respiratory Protection Program is encompassed in the GPU Nuclear Respiratory Protection Program, which is comprised of procedures based upon the technical guidance of numerous source documents. These sources are:

- 29 CFR 1919.134 (OSHA standard)
- 30 CFR 11 (NIOSH)
- ANSI Z88.2, 1992 Standards
- 10 CFR 20 Sections 1701 –1704, Appendix A and B

- NRC Regulatory Guide 8.15 – "Acceptable Programs for Respiratory Protection

- NUREG-0041 – "Manual of Respiratory Protection Against Airborne Radioactive Materials"

2.2.3 RADIATION EXPOSURE FROM RADWASTE TRANSPORTATAION

NUREG-0586, in Table 7.3-4, estimates that the dose attributable to radwaste transportation is negligible for a test reactor in a 30-year SAFSTOR condition. The estimate in NUREG-0586 is based on an assumed 4930 cubic meters of waste. The SNEC Facility PSDAR estimates that 580 cubic meters of radwaste could be generated by the described decommissioning activities. Processed waste could increase the volume by 10%. The 580 cubic meter estimate is considerably lower than the NUREG-0586, 4930 cubic meter estimate because a considerable volume of radwaste has been previously removed from the SNEC facility and disposed of at a licensed low level waste burial facility.

3.0 ACCIDENT ANALYSIS

The EPA has established protective action guidelines (PAG's) (Reference 7) that specify the potential off-site dose levels at which actions should be taken to protect the health and safety of the public. The EPA PAG's are limiting values based on the sum of the effective dose equivalent resulting from exposure to external sources and the committed effective dose equivalent incurred from the significant inhalation pathways during the early phase of an event. The EPA PAG limits are:

EPA PAGs (millirem)	
Total Whole Body (TEDE)	1000
Thyroid Committed Dose Equivalent (CEDE)	5000
Skin (CDE)	50,000

The calculated whole body doses presented in each accident analysis are TEDE values using the inhalation dose conversion values provided by EPA 400. To determine the inhalation dose, the activity is assumed to be released over a two-hour period to determine a release rate (uCi/sec). The release rate is then multiplied by the atmospheric dispersion coefficient described on page 3-70 of the PSDAR to determine the concentration at the site boundary. The EPA 400 dose conversion factors (mrem/hr/uCi/m3) are then used to calculate the off-site dose at the site boundary for the two-hour release. In actuality, the off-site dose delivered is independent of the duration of the release since the total activity released is a function of the accident rather than its duration. Releasing the activity over a one hour period would reduce the exposure time by one half but would double the dose rate. The total dose would be the same for any release duration.

Since there is no irradiated fuel stored at the SNEC site, there are no radioactive noble gases or radioiodines available for release from the site. This precludes accidental off-site radiological releases that could approach the PAGs for the skin and thyroid. As a result, the PAG for TEDE is the limiting criterion for decommissioning activities at the SNEC facility.

The bases for the nuclide mixtures in the accident analysis source terms are samples collected and published in the SNEC Characterization Report, Reference 3.

GPU Nuclear has analyzed the decommissioning activities described in the PSDAR to ensure that they will not create the potential for accidental releases that could cause doses at the site boundary to be more than a small fraction of the EPA PAGs. The following sub-sections identify the potential accidents analyzed. Performing decommissioning activities in a manner that keeps off-site doses from even the most unlikely events at a small fraction of the EPA PAGs provides for the protection of the health and safety of the public without the need for protective actions.

3.1 MATERIAL HANDLING ACCIDENT - DROPPED RESIN VESSEL

This accident scenario assumes that the steel demineralizer vessel containing the residual spent resin is dropped during removal from the containment building. This was considered to be the worst case material handling accident, since analysis of a drop of the steam generator and the pressurizer using similar assumptions resulted in less off-site dose. Dropping of the reactor pressure vessel was not analyzed since it would be highly unlikely to rupture during a materials handling accident due to the nature of its construction. The residual activity in the resin vessel has been determined to be 17 curies. The nuclide mixture is primarily composed of Co-60 (5.4%), Ni-63 (29.9%), Sr-90 (1.8%), Cs-137 (9.5%), Pu-238 (1.1%), Pu-239 (3.1%), Pu-241 (43.8%), and Am-241 (3.5%). When the vessel is dropped, it is assumed to split open, releasing 1.7X10-6 of the activity in the vessel to the atmosphere. The release fraction of 1.7X10-6 is considered to be conservative based on the following:

- NUREG/CR 0130 describes a release fraction of 1.7X10-6 for a fire or explosion in ion exchange resins. Dropping the resin vessel would provide far less motive force for releasing activity than a fire or explosion.

- Prior to shipment, the resin vessel will be filled with grout. As a result, the residual activity in the vessel will less likely to be released.

No credit is taken for filtration by the HEPA ventilation since it is hypothetically possible that such an event could occur outside the containment building. A total of 28.9 μCi is released from this accident over an assumed two-hour period.

An atmospheric dispersion factor (X/Q) of 4.14X10-3 sec/m3 is used to calculate the airborne activity concentration at the site boundary (200 meters) in accordance with Reference 6. This conservative value is calculated for a 1 m/s wind speed and a G stability category in accordance

with Reference 6. Off-site doses are calculated using the parameters and methodology of Reference 7. The whole body dose to an individual standing at the site boundary for the duration of the release is calculated to be less than 1.5 mrem. This is a small fraction of the EPA PAG of 1000 mrem for the whole body. Therefore, the container drop accident poses no serious risk to the general public and has no significant environmental impact.

The demineralizer vessel contains more loose activity than the reactor pressure vessel (17 curies versus 11.8 curies). The radionuclide distribution assumed for the demineralizer vessel drop is also richer in transuranics (the major dose contributor) than the distribution in the reactor pressure vessel. All other assumptions used in the materials handling accident would be the same. As a result, the greater activity available for release from the demineralizer vessel clearly shows that dropping this vessel provides the most bounding dose estimate for postulated materials handling accident scenarios.

3.2 FIRE - COMBUSTIBLE WASTE STORED IN THE YARD

This accident scenario assumes that a Sea-Land van of combustible waste materials is completely consumed by a fire while stored in the yard area of the SNEC facility. This was considered to be the worst case fire, since the waste is stored outside the containment building and releases would not be contained by building confines or HEPA ventilation systems. The activity in the van is assumed to be 1.79 curies. This amount of activity in the van is 99.8% of the Type A LSA limit for this type of container, which is the maximum shipping class to which such containers can be loaded. The use of Type A or Type B shipping containers would prevent the release of significant quantities of activity during a fire. They are also far less likely to be involved in a fire. The nuclide mixture is primarily composed of Co-60 (43.7%), Ni-63 (0.8%), Sr-90 (0.1%), Cs-137 (54.9%), Pu-238 (0.02%), Pu-239 (0.05%), Pu-241 (0.2%), and Am-241 (0.08%). At the LSA limit for a van, this type of contamination produces the highest off-site doses of all loose surface contamination characterized in other areas of the building. The maximum fractional airborne release measured during burning of contaminated wastes under similar conditions was 1.5X10-4, in accordance with Reference 5. No credit is taken for filtration by the HEPA ventilation since it is assumed that the fire occurs in the yard area. A total of 269 μCi is released from this accident over an assumed two-hour period.

Using the same meteorological assumptions and dose calculation methodologies as the analysis in Section 3.1, the whole body dose to an

individual standing at the site boundary for the duration of the release is calculated to be less than 0.3 mrem. This is a small fraction of the EPA PAG of 1000 mrem for the whole body. The fire accident poses no serious risk to the general public and has no significant environmental impact.

3.3 VACUUM FILTER BAG RUPTURE

Sharp objects, such as metal shards, could rupture a filter-bag during surface decontamination operations involving the use of a vacuum cleaner. To maximize the calculation of the atmospheric release, the bag rupture is assumed to occur at the time just prior to the bag change (i.e., when the filter bag is full). It is assumed that the vacuum is used to vacuum 2600 m2 of floor area prior to the bag being changed out, per Reference 5. It is assumed that the average loose surface contamination level on the floor being vacuumed is $3x10^6$ dpm/100 cm2. This is the highest loose surface contamination level identified in the containment building, on the floor of the spent fuel pool, elevation 765'-8". Loose surface contamination levels in the majority of the containment building are orders of magnitude less than in this area, so it is believed that this assumption provides a highly conservative estimate of the airborne activity generated during this scenario. During the vacuuming process, it is assumed that 50% of the loose surface activity on the area being vacuumed is removed by the vacuum and collected in the bag per Reference 5. As a result, a total of 0.176 Ci of activity is assumed to be present in the bag when the rupture occurs. The nuclide mixture is primarily composed of Co-60 (43.7%), Ni-63 (0.8%), Sr-90 (0.1%), Cs-137 (54.9%), Pu-238 (0.02%), Pu-239 (0.05%), Pu-241 (0.2%), and Am-241 (0.08%). When the filter bag is ruptured, all of the collected activity in the bag (0.176 Ci) is assumed to become airborne in the building because of the mechanical and aerodynamic forces of the vacuum cleaner airflow. Since decontamination activities at the SNEC facility will only be performed while the building ventilation system is operable, it is assumed that the airborne activity will be collected by the building ventilation system and discharged to the environment through HEPA filters (99.95% efficient per Reference 5). No credit is taken for plateout of particulates on building surfaces or ductwork. A total of 87.8 μCi is assumed to be discharged to the environment.

Using the same meteorological assumptions and dose calculation methodologies as the analysis in Section 3.1, the whole body dose to an individual standing at the site boundary for the duration of the release is calculated to be less than 0.09 mrem. This is a small fraction of the EPA PAG of 1000 mrem for the whole body. The vacuum filter-bag rupture accident poses no serious risk to the general public and has no significant

environmental impact.

3.4 SEGMENTATION OF COMPONENTS OR STRUCTURES WITHOUT OR DURING LOSS OF LOCAL ENGINEERING CONTROLS

Segmentation of components or structures can be accomplished by disassembly , cutting, or other destructive methods. Disassembly of components or structures does not result in destruction of material. The potential for radioactive material release is limited to dislodging contamination. Disassembly events are therefore considered bounded by the material-handling event discussed in Section 3.1.

The dismantlement of RCS piping is considered to provide the bounding analysis for generation of airborne activity, since it is anticipated that the reactor vessel will not require segmentation for removal. While activated components like the reactor vessel contain the greatest activity levels, the transuranic content of surface contamination in RCS components at the SNEC facility is the dominant factor in producing off-site doses. As a result, surface contamination of piping in the Safety Injection Piping was used to represent the maximum activity available for release during segmentation of RCS components. This piping was chosen since it had the highest transuranic content of all piping samples collected during the SNEC facility radiological characterization.

The guidance provided in Reference 5 was used to determine the amount of activity that could be generated during a segmentation cut. To determine the total activity generated from a segmentation cut, the following equation was used:

Total Activity Generated = (Surface Contamination Level)(Kerf Width)(Pi X Length of Pipe ID)

To determine the maximum generated activity the following values were used:

- Surface contamination samples from the safety injection piping showed an activity of 208 μCi per gram. It was assumed that this activity was imbedded in the first 1/16" layer of the piping. The density of stainless steel is assumed to be 8 g/cc (Reference 5). The mass of a 1 cm2 area of piping, 0.159 cm thick is 1.27 g. As a result, the activity per unit area in the pipe is assumed to be 208 μCi/g X 1.27 g/cm2, or 264 μCi/cm2.

- The kerf width used was 0.95 cm. This is conservative since it

is the largest kerf width of possible cutting methods that may be employed (Reference 5).

- The diameter of the pipe assumed to be cut is 78.7 cm (31.7 inches) per Reference 5. This assumption represents the longest segmentation cut that would be performed before the release is detected and segmentation secured to terminate the generation of airborne activity. The assumptions are highly conservative, in that continuous air monitors located in the area would alert personnel to the release long before the full length of pipe was cut and the largest pipe at the SNEC facility is 14 inches in diameter.

Using the above equation, the maximum release to the containment atmosphere is 0.062 Ci. No credit is taken for local engineering controls since they are assumed to have failed or not be present. The nuclide mixture is primarily composed of Co-60 (17.3%), Ni-63 (44.0%), Fe-55 (2.5%), Cs-137 (0.4%), Pu-238 (1.1%), Pu-239 (2.4%), Pu-241 (27.6%), and Am-241 (3.7%). Since cutting activities at the SNEC facility will only be performed while the building ventilation system is operable, it is assumed that the airborne activity will be collected by the building ventilation system and discharged to the environment through HEPA filters (99.95% efficient per Reference 5). No credit is taken for plateout of particulates on building surfaces or ductwork. A total of 30.9 μCi is assumed to be discharged to the environment.

Using the same meteorological assumptions and dose calculation methodologies as the analysis in Section 3.1, the whole body dose to an individual standing at the site boundary for the duration of the release is calculated to be less than 1.5 mrem. This is a small fraction of the EPA PAG of 1000 mrem for the whole body. The segmentation accident poses no serious risk to the general public and has no significant environmental impact.

3.5 OXYACETYLENE EXPLOSION

It is anticipated that segmentation of the reactor pressure vessel will not be required. However oxyacetylene torches may be used to segment RCS piping systems and other piping systems within the containment building. For the purposes of this accident evaluation, it is assumed that reactor coolant system pipe cutting will be performed using oxyacetylene torches. It is assumed that the acetylene is stored in an area that does not contain radioactivity, so there is no radioactive release potential from a postulated storage accident.

Violent explosions can occur when acetylene and oxygen are incorrectly mixed. The degree of explosive violence depends on how closely the gas mixture approximates the ratio for complete combustion. Oxyacetylene explosions can occur from such causes as flow reversal, nozzle obstructions, or flashbacks. This accident is postulated to occur during cutting of the RCS piping. It is conservatively assumed that all the RCS piping has the same radiological characteristics as the safety injection piping. This piping was chosen since it had the highest transuranic content of all piping samples collected during the SNEC facility radiological characterization. In addition, it is anticipated that such piping would be one of the more highly activated piping sections due to its proximity to the reactor. It is assumed that cutting of this piping system would be performed within a portable ventilated enclosure. It is assumed that all the filters contained within the portable enclosure are damaged and release all of their contents to the containment building atmosphere. It is further assumed that there are ten filters and the accident occurs when the filters are fully loaded.

The mass of material that can be deposited on enclosure HEPA filters without causing serious operational problems, such as excessive pressure drop, varies considerably with the filter construction and particle size of the deposited material. In this accident, it is assumed that 2.3 kg of material is deposited per filter (Reference 5), and all of this material is released into the containment building during the explosion. To maximize the results, it is also assumed that about the same amount of material on the walls and floor of the enclosure is also released due to the explosion. As a result, a total of 46 kg of material with a specific activity of 0.038 μCi/g goes airborne in the containment building during the explosion.

Using the assumptions above, the maximum release to the containment atmosphere is 0.0018 Ci. The nuclide mixture is primarily composed of Co-60 (17.5%), N-63 (44.6%), Fe-55 (2.5%), Cs-137 (0.4%), Pu-238 (1.1%), Pu-239 (2.4%), Pu-241 (27.4%), and Am-241 (3.7%). Since cutting activities at the SNEC facility will only be performed while the building ventilation system is operable, it is assumed that the airborne activity will be collected by the building ventilation system and discharged to the environment through HEPA filters (99.95% efficient per Reference 5). No credit is taken for plate-out of particulates on building surfaces or ductwork. A total of 0.88 μCi is assumed to be discharged to the environment.

Using the same meteorological assumptions and dose calculation methodologies as the analysis in Section 3.1, the whole body dose to an

individual standing at the site boundary for the duration of the release is calculated to be less than 0.05 mrem. This is a small fraction of the EPA PAG of 1000 mrem for the whole body. The oxyacetylene explosion accident poses no serious risk to the general public and has no significant environmental impact.

3.6 EXPLOSION OF LIQUID PROPANE GAS (LPG) LEAKED FROM A FRONT END LOADER

A LPG powered front-end loader for loading concrete rubble and moving equipment is assumed to be used to support dismantling operations. An accidental leak of LPG is postulated to occur during the loading of concrete rubble in the containment building. During this accident, it is assumed that the pre-filters and filters in both exhaust filter banks are ruptured simultaneously (two banks with 50 filters per bank per Reference 5). It is further assumed that the filters are fully loaded with contaminated concrete material.

The mass of material that can be deposited on HEPA filters without causing serious operational problems, such as excessive pressure drop, varies considerably with the filter construction and particle size of the deposited material. In this accident, it is assumed that 2.3 kg of material is deposited per filter (Reference 5), and all of this material is released to the environment during the explosion. To maximize the results, it is also assumed that about the same amount of material on the ductwork is also released due to the explosion (Reference 5). As a result, a total of 460 kg of material with a specific activity of 0.014 μCi/g goes airborne to the environment during the explosion.

Using the assumptions above, the maximum release to the environment is 6500 μCi. The nuclide mixture is primarily composed of Co-60 (0.82%), N-63 (0.01%) and Cs-137 (99.2%), along with small fractions of Sr-90, Pu-238, Pu-239, Pu-241, and Am-241.

Using the same meteorological assumptions and dose calculation methodologies as the analysis in Section 3.1, the whole body dose to an individual standing at the site boundary for the duration of the release is calculated to be less than 0.4 mrem. This is a small fraction of the EPA PAG of 1000 mrem for the whole body. The explosion of LPG accident poses no serious risk to the general public and has no significant environmental impact.

3.7 LIQUID WASTE STORAGE VESSEL FAILURE

For a bounding estimate of the contents of a radioactive liquid waste storage tank, it is assumed that the floors and walls of the spent fuel pool (Area 6) were completely decontaminated using 500 gallons of water. The surface areas and mean smearable activity for these areas were take from the SNEC Site Characterization Report, Section 4.1.5 and Table 4-44 respectively. A smear efficiency of 10% was also assumed so the activity available for removal by decontamination was 10 times the smearable activity found. The total calculated activity is 103,685µCi.

Assuming this activity is contained in 500 gallons of water, the resulting nuclide concentrations using the Area 6 distribution are primarily composed of Co-60 (43.6%), N-63 (0.8%) and Cs-137 (54.9%), along with small fractions of Sr-90, Pu-238, Pu-239, Pu-241, and Am-241.

The tank is assumed to develop a leak and all of the liquid is released. It is assumed that a release fraction of 5E-5 of the activity in the tank goes airborne. This is a highly conservative assumption, as DOE-HDBK-3010-94 lists this as the bounding release fraction for a tank pressurized up to 50 psig. A tank used to store this type of liquid would be at atmospheric pressure so the release fraction should be substantially less than this value.

An atmospheric dispersion factor (X/Q) of 4.14X10-3 sec/m3 is used to calculate the airborne activity concentration at the site boundary (200 meters). This conservative value is calculated for a 1 m/s wind speed and a G stability category. Off-site doses are calculated using the parameters and methodology of EPA 400. The whole body dose to an individual standing at the site boundary for the duration of the release is calculated to be less than 5X10-3 mrem. This is a small fraction of the EPA PAG of 1000 mrem for the whole body. The liquid waste storage vessel failure accident poses no serious risk to the general public and has no significant environmental impact.

No liquid pathway evaluation was made, since the low volumes of liquid radwaste and their distance from the river would preclude direct entry into the river. Any entry into the river would be through the groundwater system. Any dose from this pathway would be insignificant since virtually all of the activity in the water would be bound up in the soil, and the release rate to the river via groundwater would be very slow.

3.8 IN SITU DECONTAMINATION OF SYSTEMS

Large-scale chemical decontamination of systems is not anticipated as part of the SNEC facility decommissioning. However, limited application may be used on systems or tanks to reduce radiation dose rates prior to dismantlement or general area decontamination. This type of decontamination employs the use of liquid decontamination agents that do not readily become airborne. Even during a spray release, droplets tend to readily plateout on building surfaces and equipment. Those droplets that remain airborne are readily captured by ventilation filtration systems prior to release to the environment. In addition, they are not instantaneous releases as would be the case with the dropped HEPA vacuum or explosion events. The nature of this type of event allows for mitigation of the release upon detection by airborne radioactivity monitors, whereas the explosion events previously analyzed do not permit mitigating actions until after the release has already occurred. As a result, radiological releases from accidents involving in situ decontamination of systems are considered bounded by the dropped vacuum and explosion events analyzed in Sections 3.3, 3.5 and 3.6.

3.9 LOSS OF SUPPORT SYSTEMS

Electric power, cooling water, and compressed air systems provide support to decommissioning activities. Loss of these systems could potentially affect many other systems and plant areas simultaneously. Each of these events is evaluated below.

A. Loss of Off-site Power

Offsite power is used to energize tools, cranes, lighting and air filtering equipment used during decommissioning operations. A loss of power to tools and lighting being used for decommissioning will result in an interruption of work activities, but does not result in the release of radioactivity. A loss of power to plant ventilation and filtering systems could result in the disruption of airflow paths and effective utilization of HEPA filters. In the event of loss of offsite power, work activities with the potential for airborne contamination will be suspended.

A loss of offsite power could result in loss of power to material handling equipment. Occupational Safety and Health Administration (OSHA) regulations require that crane hoisting units be equipped with a holding brake. A holding brake is a brake that

automatically prevents motion when the power is off. Although loss of power is not expected to result in crane or hoist failure, this event would be bounded by the material handling event analysis provided in Section 3.1.

B. Loss of Cooling Water

Cooling water may be supplied to air compressors and the decommissioning cutting equipment and tools. Cutting operations that use cooling water will stop. This does not adversely affect contamination control. Compressed air will be lost if alternate cooling water is not established in a short period of time. The consequences of a loss of compressed air are analyzed in Section 3.8.C.

A loss of cooling water being used for decommissioning will result in an interruption of work activities, but does not result in the release of radioactivity. Therefore, public health and safety are not adversely affected by a loss of cooling water event.

C. Loss of Compressed Air

Compressed air will be supplied by air compressors to power pneumatic tools. Upon a loss of compressed air, decommissioning pneumatic tools shut down. This terminates potential releases from activities using these tools.

A loss of compressed air being used for decommissioning will result in an interruption of work activities, but does not result in the release of radioactivity. Therefore, public health and safety are not adversely affected by a loss of compressed air event.

3.10 EXTERNAL EVENTS

A review of external events was done to evaluate the effects of natural and manmade events on the radiological consequences of decommissioning activities. The hazards associated with these events are assumed to be consistent with those that could have occurred with the SNEC facility in operation, which were evaluated in the previous SNEC Facility SAR. Such events are of extremely low probability. A discussion for each of the analyzed events follows.

A. Earthquake

Per the previous SNEC Facility SAR dated April 1972; there has been only one minor earthquake in the area in the past 200 years. In the unlikely event that a seismic event would occur during decommissioning, it could initiate a materials handling accident and/or loss of off-site power. These events have been analyzed in Section 3.1 and Section 3.8.A and found to pose no serious risk to the general public and no significant environmental impact.

B. Flooding

As discussed in the previous SNEC Facility SAR, the highest flood level on record is 809.5 feet, whereas the site grade level is 811 feet. A flooding event at the SNEC facility would typically be preceded by a sufficient warning period to prepare the site for the event by securing decommissioning activities. Most of the potentially removable radioactivity at the SNEC facility is located in the containment building, below the potential flood height. However, the potential release pathway is above the worst case flood elevation. Most of the balance of contamination would be packaged for shipment. Containers that hold high radioactivity materials are designed for greater levels of structural integrity, providing additional protection. In the unlikely event that a lower radioactivity container is exposed to flood waters and radioactive material is dispersed, the flooding dilution effect results in a radiological consequence significantly less than an airborne release of a similar amount of radioactive material.

Flooding could initiate a loss of off-site power event. The analysis in Section 3.8.A concludes that public health and safety are not adversely affected from a loss of off-site power event.

C. Tornadoes and Extreme Winds

The annual strike probability of a tornado that could cause a significant release of radioactivity from a container or component is very low. In addition, most components and containers that would be vulnerable to a tornado will be packaged awaiting shipment. The integrity of these containers would limit the probability and consequences of a significant release of radioactive materials. Further consideration of the interaction between a tornado and decommissioning is not warranted.

An extreme wind event at the SNEC facility would be preceded by a sufficient warning period to prepare the site for the event by securing decommissioning activities. Most of the potentially airborne radioactivity at the SNEC facility is located in the containment building, which protects the components from the effects of extreme winds, as discussed in the previous SNEC Facility SAR. Components and containers that would be outside the containment building and vulnerable to extreme winds will be packaged awaiting shipment.

Containers that hold high radioactivity materials are designed for greater levels of structural integrity, providing additional protection. In the unlikely event that a lower radioactivity container is unprotected and exposed to extreme winds and radioactive material is dispersed, the combination of low radioactivity content and significant dispersion by wind would result in an offsite dose that is bounded by the limiting release of the material handling event analyzed in Section 3.1.

D. Lightning

The lightning strike annual probability for a decommissioning activity is very low. Although the effects of lightning are localized, a lightning strike could initiate a loss of off-site power event or a fire. The analyses in Sections 3.2 and 3.8.A conclude that public health and safety are not adversely affected by these events. Further consideration of the interaction between decommissioning and a lightning event is not warranted.

E. Toxic Chemical Event

Toxic chemicals are a personnel safety concern. Volatile toxic chemicals are not anticipated to be stored or used at the SNEC facility in the quantities required to initiate an airborne safety concern. However, in unlikely event of a toxic chemical event affecting plant personnel, decommissioning activities would be suspended and personnel evacuated as necessary. A toxic chemical event has the potential to initiate a radiological event. The most severe radiological event that could be initiated would be if a personnel injury resulted in an event involving a loaded crane or hoist. A toxic chemical event is therefore considered as an initiating event for a material handling event, which is analyzed in

Section 3.1.

F. Intruder Event

The cause of this type of event could be an individual from the general public breaching the security fence and entering a radiologically controlled area. The consequences due to radiation exposure of a member of the public from an unauthorized entrance to a radiologically controlled area are not expected to be significant because of the low levels of radiation and contamination throughout the plant. Areas with dose rates of 100 mR/hr at 30 cm will be controlled in accordance with Technical Specification requirements. Radiation exposures are therefore expected to be low and should not pose a significant risk.

A less likely accident scenario was also assumed to involve sabotage by a plant employee or a member of the public, resulting in a fire in a radiologically controlled area. The consequence of an accident involving sabotage such as a fire was analyzed in Section 3.2. The analysis in Section 3.2 concludes that public health and safety are not adversely affected from a fire event.

G. Forest or Brush Fire

The SNEC facility site is located in a relatively wooded section in the Allegheny Mountains, three fourths of a mile north of the Borough of Saxton in Liberty Township, Bedford County, Pennsylvania. The area surrounding the containment building and areas where radioactive materials are stored is maintained and kept free of any significant quantities of combustible vegetation. The local Fire Company in the Borough of Saxton is close by and could respond quickly to fires outside the plant area that could pose a threat of spreading to the plant site. In addition, a forest fire event at the SNEC facility would typically be preceded by a sufficient warning period to prepare the site for the event. A forest fire could initiate a loss of off-site power event, which was analyzed in Section 3.8.A and concluded that public health and safety were not adversely affected from a loss of off-site power event.

3.11 OFFSITE RADIOLOGICAL EVENTS

Off-site radiological events related to decommissioning activities are limited to those associated with the shipment of radioactive materials. Radioactive shipments will be made in accordance with applicable

regulatory requirements. The radioactive waste management program and the Quality Assurance Plan assure compliance with these requirements. Compliance with these requirements ensures that both the probability of occurrence and the consequences of an off-site event do not significantly affect the public health and safety.

3.12 CONTAINMENT VESSEL BREACH

During decommissioning operations it is possible that the containment vessel steel liner could be accidentally breached. The principal concerns with any liner breach would be the possibility of radiological contaminants migrating to the surrounding environment (air and ground water and the ability to contain any in-leakage of ground water into containment). Precautions will be included in procedures to minimize the chance that the liner integrity could be challenged. For these reasons, containment vessel liner penetration is a low probability event, which also carries a minimal consequence.

3.13 SUMMARY

The accident analyses demonstrate that no significant adverse public health and safety or environmental impacts are expected from accidents that might occur during the SNEC facility's decommissioning operations. The highest calculated dose to an individual located at the site boundary is less than 1.5 mrem to the whole body during a postulated materials handling accident. This highly conservative, unrealistic scenario is further described in Section 3.1. The results of other on-site accidents are below this value. The limiting accident case represents less than 0.15% of the EPA lower whole body dose limit. As a result, it is concluded that there are no significant radiological consequences to the general public from postulated credible accidents during the planned decommissioning operations at the SNEC facility.

4.0 INDUSTRIAL SAFETY

4.1 GENERAL

There is a potential for workers to experience injuries and fatalities as a result of accidents occurring during decommissioning activities. Accidents could result from falling objects, fires, operation of equipment, use of tools, lighting equipment, excavations and other activities.

The occupational health and safety of workers will be protected by implementing measures in accordance with 29 CFR 1910, General Industry Safety and Health Standards Application to Construction, and with 29 CFR Part 1926, Occupational Safety and Health (OSHA) Standards for the Construction Industry.

4.2 OCCUPATIONAL HEALTH AND ENVIRONMENTAL CONTROL

Facilities and equipment will be provided to protect the occupational health of workers during the decommissioning of the SNEC facility. Such facilities and equipment include first aid kits within work areas, nearby medical facilities, transportation for injured workers, environmental controls in work areas (i.e. adequate ventilation, dust control, illumination, noise control, potable water and sanitary facilities), radiation protection and asbestos protection.

4.3 PERSONAL PROTECTION

Personal protection devices provided to workers will include hardhats, hearing protection devices, eye and face protection devices, hand protection and respiratory protection devices.

4.4 FIRE PROTECTION AND PREVENTION

The Fire Protection Program is contained within the Emergency Response Procedure for the SNEC facility 6575-ADM-4500.06. The procedure addresses the increased number of temporary support buildings and work activities necessary to decommission the facility, identifies the required notifications and response to smoke or fire.

Controls on transient combustibles within the CV will limit the combustible material available to fuel a fire. If the CV fire loading

conditions change radically, the effect on the risk will be reevaluated

The Decommissioning Support Building will be provided with a fire detection system and conditions within will be maintained to control transient combustible materials. An increased fire potential may exist should there be the need to expose combustible materials for the period required to repackage them; however, available portable fire extinguishment equipment will suffice.

Portable fire extinguishers charged with dry chemicals or CO2 are provided at strategic locations for general use and at the site of burning, cutting, grinding and welding (hot work) activities. To reduce the probability of fires during decommissioning activities, fire prevention measures will be in effect to store flammable materials in containers meeting OSHA requirements and combustible materials and flammable liquids will not be permitted in areas where hot work or spark producing activities are performed. Hot work permits will be required to control spark producing activities and the use of ignition sources. Work area safety inspections and fire watches will be required.

4.5 LIFTING AND HANDLING EQUIPMENT

Lifting and handling equipment including monorail, forklift, and jib or gantry cranes employed for truck loading will comply with the provisions of 29 CFR 1926, Subpart N, Cranes, Derricks, Hoists, Elevators and Conveyors. The equipment will comply with manufacturer specifications and limitations; the rated load capacities, operating speeds, hazard warnings or instructions will be adhered to.

4.6 EXCAVATIONS

Any excavations will comply with the provisions of 29 CFR 1926, Subpart P, Excavations, Trenching and Shoring. Personnel protection devices will be provided to workers as appropriate and excavations will be inspected daily when in use.

5.0 CONDUCT OF DECOMMISSIONING

5.1 ORGANIZATION

GPU Nuclear has the responsibility for safely performing decommissioning activities. Lines of authority, responsibility and communication are procedurally defined and established. The relationships shall be identified and updated, as appropriate, in organizational charts, departmental functional responsibility and relationship descriptions, job descriptions for key personnel positions or equivalent forms of documentation. The SNEC organization is depicted on Figures 2.3-1 and 2.3-2 of the SNEC Facility PSDAR.

A. The President GPU Nuclear is responsible for and provides full-time dedicated staff for the purpose of conducting all decommissioning associated activities safely and effectively.

B. The Vice President Engineering Division assures that all division and corporate activities are performed in accordance with corporate policies, applicable laws, regulations, licenses and Technical Specifications.

C. The Program Director SNEC Facility is responsible for administration of all SNEC facility functions, for direction of all decommissioning activities, and for assuring that the requirements of License No. DPR-4 and the Technical Specifications are implemented.

D. The SNEC Facility Site Supervisor provides on-site management and continuing oversight of production activities.

E. The Radiation Safety Officer (RSO) is responsible for the conduct and oversight of all SNEC radiation safety activities through implementation of the Radiation Protection Plan. All radiological controls personnel have "stop-work" authority in matters relating to or impacting radiation safety.

F. The Group Radiological Controls Supervisor (GRCS) directly supervises radiation safety activities.

G. Other GPU Nuclear Vice Presidents (Financial and Planning Services and Engineering) provide SNEC facility management

with technical support and project management capabilities.

5.2 TRAINING

Training shall be provided for the indoctrination and training of personnel performing activities associated with the decommissioning of the SNEC facility as necessary to assure that suitable proficiency is achieved and maintained. The program shall take into account the need for special controls, processes, equipment, tools, and skills to perform the task assigned.

Training programs shall be established for those personnel performing activities that affect quality, such that they are knowledgeable in the quality assurance program and proficient in implementing these requirements. These training programs shall assure the following

A. Personnel responsible for performing these activities are instructed as to the purpose, scope, and implementation of applicable procedures.

B. Personnel performing such activities are trained and qualified, as appropriate, in the principles and techniques of the activity being conducted.

C. The scope, objective, and method of implementing the training are documented.

D. Methods are provided for documenting training sessions. They describe content, attendance, date of attendance, and the results of the training session, as appropriate.

5.3 PROCEDURES

Written procedures are established, implemented and maintained to provide for the control and performance of those decommissioning activities which affect quality, health and safety of the public and project personnel, or regulatory requirements.

The following typical procedures shall be provided as appropriate:

- calibration procedures

- Radiation protection procedures
- Special process procedures
- Maintenance procedures
- Dismantlement procedures
- Audit procedures
- Administrative procedures
- Emergency procedures
- Rigging, lifting and handling procedures
- Inspection procedures

Procedures required by the above and substantive changes thereto, shall be reviewed and approved as described in the Technical Specifications.

5.4 RECORDS

Decommissioning records will be maintained in accordance with the SNEC Facility Decommissioning Quality Assurance Plan (Reference 9) and the SNEC Facility Technical Specifications.

5.5 DECOMMISSIONING QUALITY ASSURANCE PLAN

The SNEC Facility Decommissioning Quality Assurance Plan is issued under the authority of the GPU Nuclear President and is the highest GPU Nuclear document that provides generic and specific requirements and methods to control activities. The "QA Program" includes the Plan and the approved documents, which are used to implement the Plan. The Plan is implemented through such approved documents.

The SNEC Facility Decommissioning Quality Assurance Plan has been established to control the activities performed by GPU Nuclear and its contractors, within the scope of the Plan. This control is exerted primarily through the provision of, and compliance with, implementing documents and assurance that such documents are adequate and consistently used.

Adherence to the requirements of the QA Plan is mandatory for all GPU Nuclear organizations and for all external organizations providing items,

parts or materials, or conducting activities that are within the scope of this Plan.

5.6 EMERGENCY PLAN

Facility emergencies are identified and actions to be taken by GPU Nuclear or its contractor personnel, and/or outside assistance agencies are delineated in the emergency response procedure and emergency plan.

6.0 REFERENCES

1. SNEC Site Characterization Plan, Procedure No. 6575-PLN-4520.06

2. SNEC Radiation Protection Plan, Procedure No. 6575-PLN-4542.01

3. SNEC Site Characterization Report 5570-96-036, dated May 1996

4. SNEC Facility Post-Shutdown Decommissioning Activities Report (issued as the SNEC Facility Decommissioning Plan C301-96-2006, dated February 16, 1996)

5. NUREG/CR-0130, "Technology, Safety, and Costs of Decommissioning a Reference Pressurized Water Reactor Power Station", Volumes 1 and 2

6. Regulatory Guide 1.145, "Atmospheric Dispersion Models for Potential Accident Consequence Assessments at Nuclear Power Plants", US NRC, 1983

7. EPA 400-R-92-001, "Manual of Protective Actions Guides and Protective Actions for Nuclear Incidents", US EPA, 1991

8. SNEC Facility Decommissioning Environmental Report, 1920-00-20025, dated February 2, 2000

9. SNEC Facility Decommissioning Quality Assurance Plan, Procedure No. 1000-PLN-3000.05

10. GPU Nuclear Operational Quality Assurance Plan, Procedure No. 1000-PLN-7000.01

11. SNEC Facility Safety Analysis Report, dated April 1972

12. SNEC Facility License Termination Plan, dated February 2000