Attachment 3

to NG-00-0920

Revision 15 of DAEC UFSAR

10 COPIES

ENCLOSED

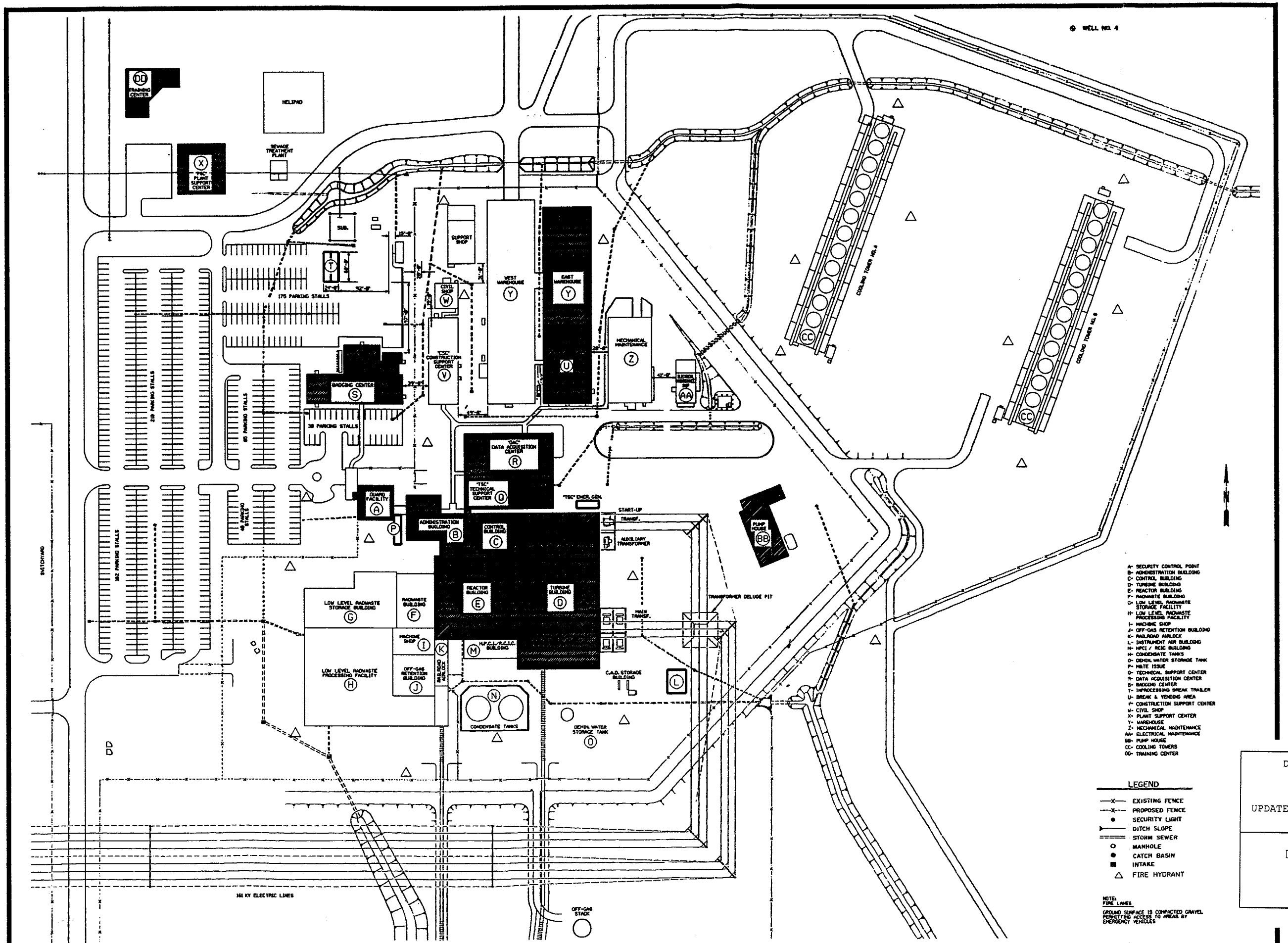

MASTER FACILITIES PLAN
DUANE ARNOLD ENERGY CENTER

DUANE ARNOLD ENERGY CENTER

IES UTILITIES, INC.

UPDATED FINAL SAFETY ANALYSIS REPORT

DAEC Facilities Plan

Figure 1.2-2

Revision 15 - 5/00

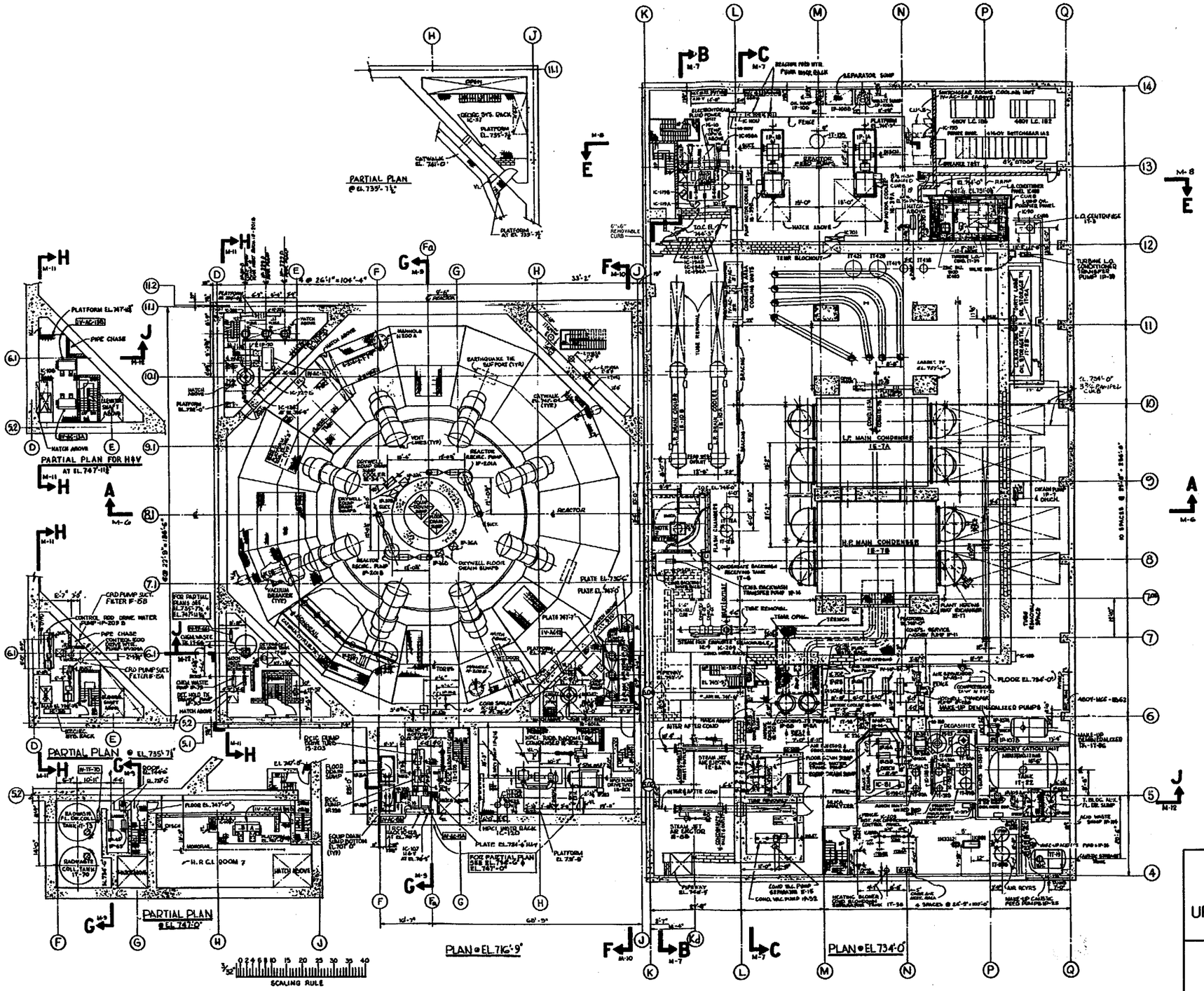

NOTE

1. BASIC LOCATIONS TO BE AS SHOWN ± 2'-0"
2. HEPA FILTER REMOVED FROM HOUSING OUTBOARD FOR CONDENSATE BACKWASH RECEIVING TANK 1T-6 PER ECP-1571

DUANE ARNOLD ENERGY CENTER
IES UTILITIES
UPDATED FINAL SAFETY ANALYSIS REPORT

EQUIPMENT LOCATION PLANS AT ELEVATION 716'-9" AND 734'-0"

FIGURE 1.2-3

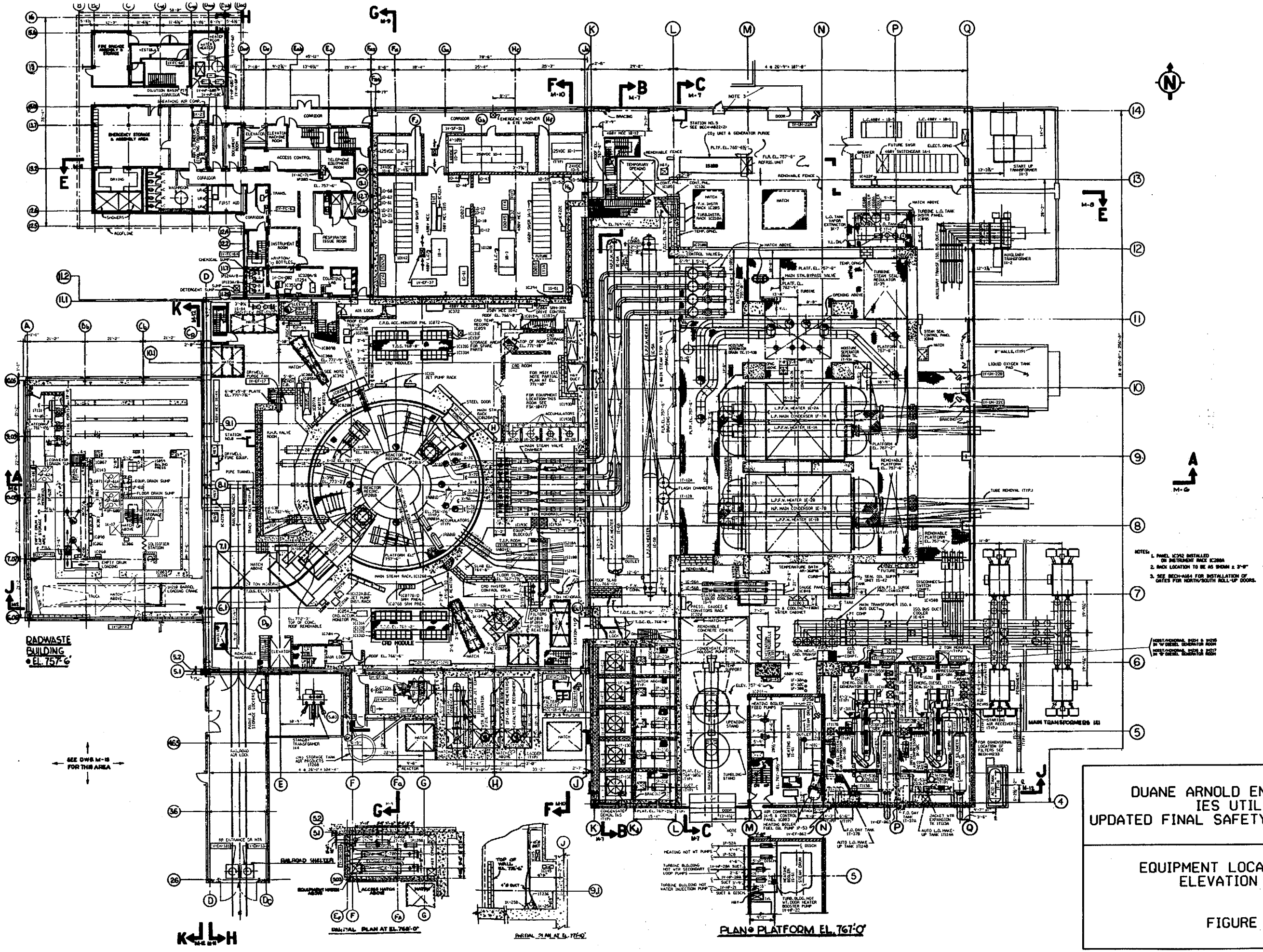

DUANE ARNOLD ENERGY CENTER
IES UTILITIES
UPDATED FINAL SAFETY ANALYSIS REPORT

EQUIPMENT LOCATION PLAN AT ELEVATION 757'-6"

FIGURE 1.2-4

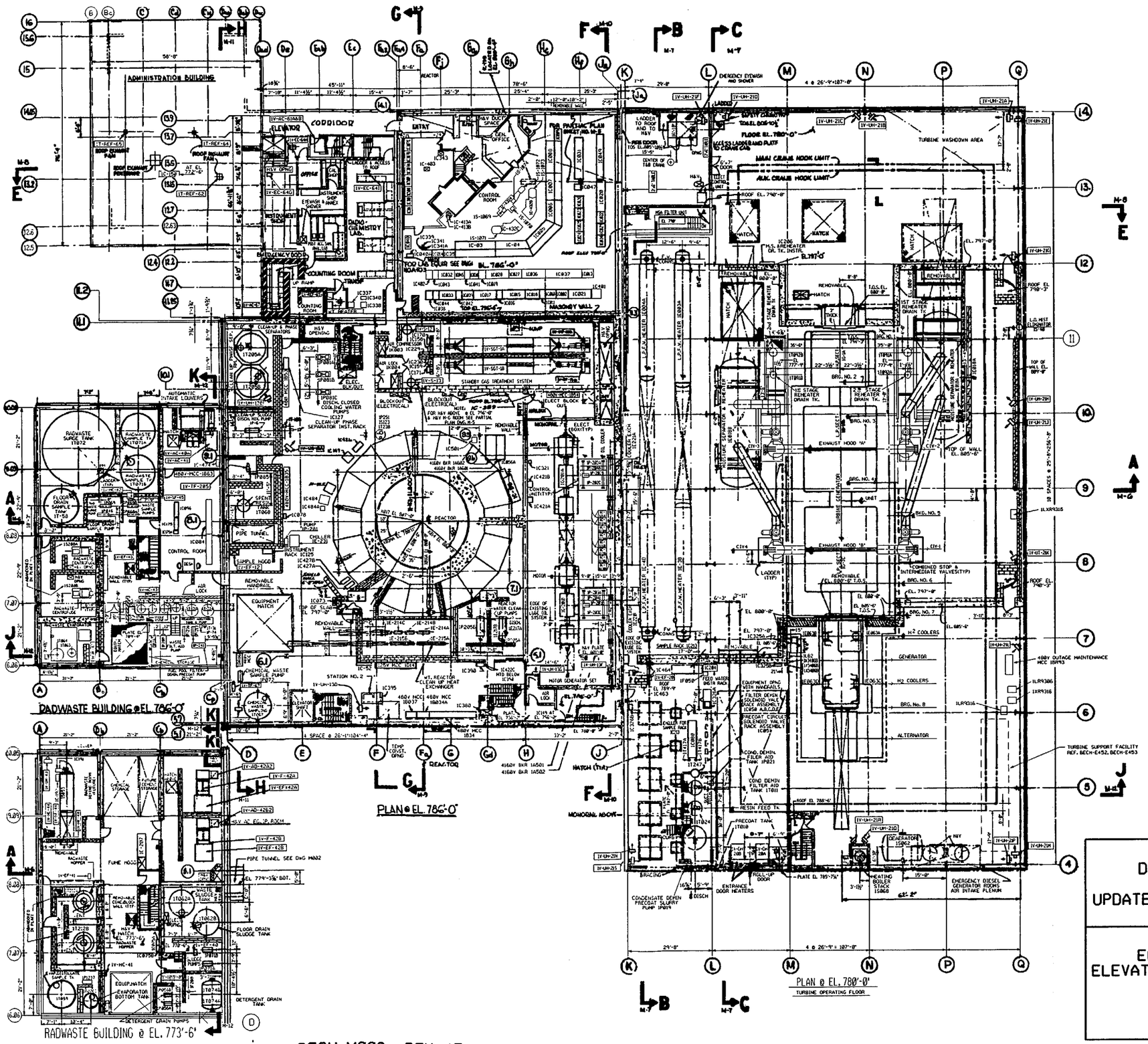

NOTE:
RACK LOCATIONS TO BE AS SHOWN ± 3'-0"

DUANE ARNOLD ENERGY CENTER
IES UTILITIES
UPDATED FINAL SAFETY ANALYSIS REPORT

EQUIPMENT LOCATION PLANS AT ELEVATIONS 780'-0", 785'-0" AND 773'-6"

FIGURE 1.2-5

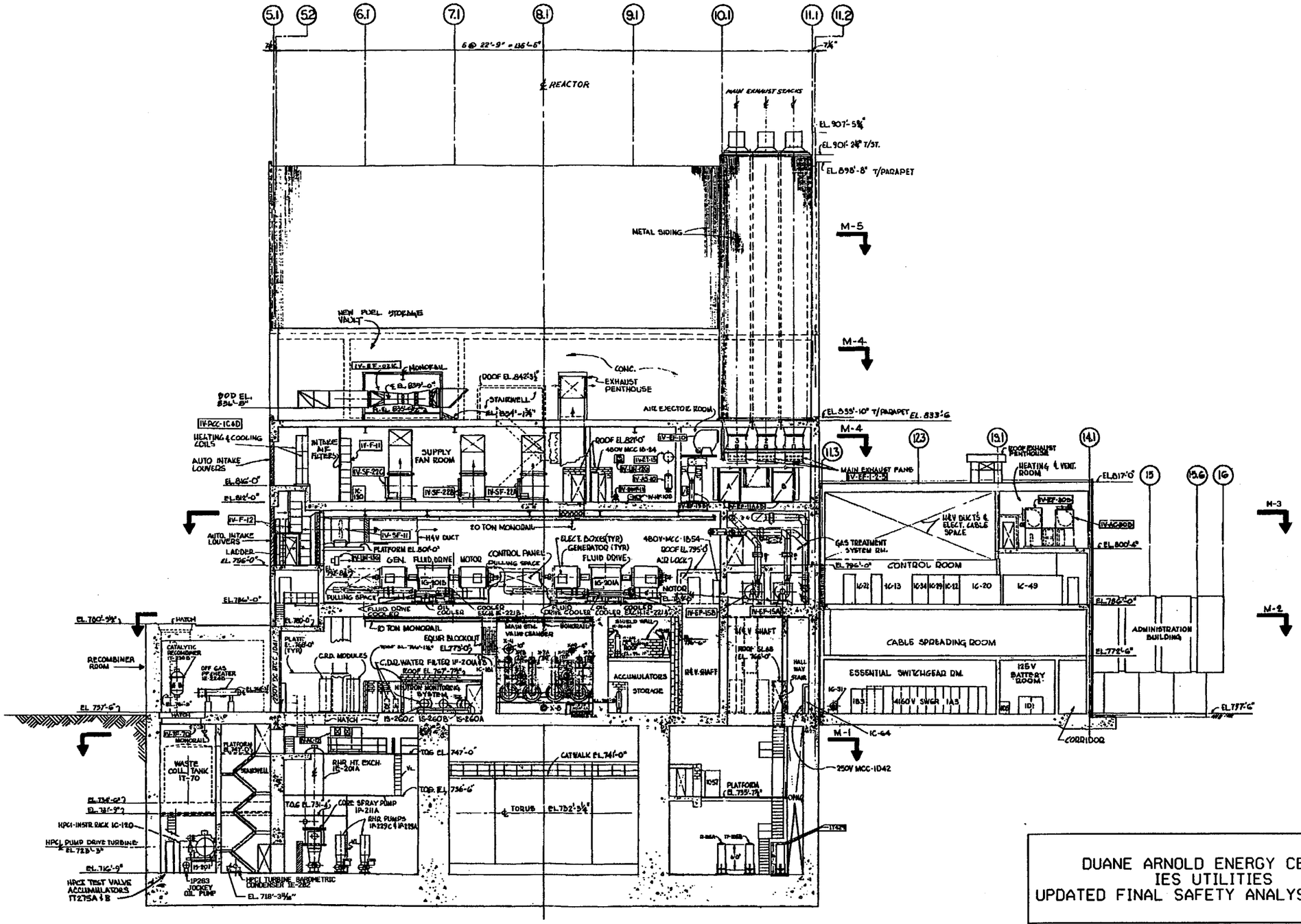

SECTION F-F

DUANE ARNOLD ENERGY CENTER
IES UTILITIES
UPDATED FINAL SAFETY ANALYSIS REPORT

EQUIPMENT LOCATION, SECTION F-F

FIGURE 1.2-12

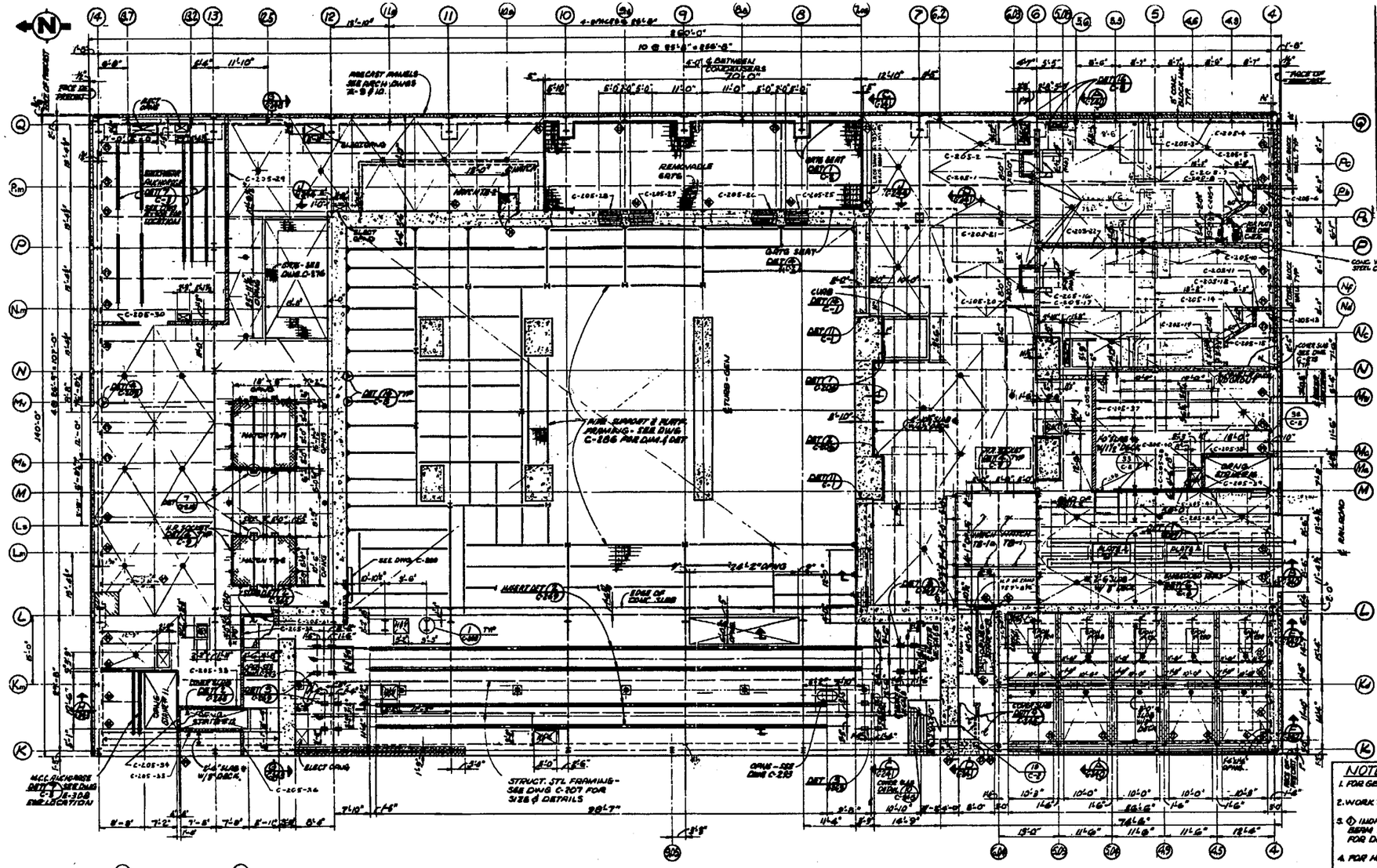

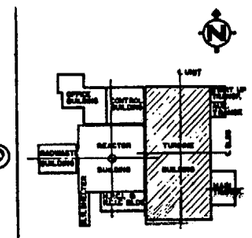

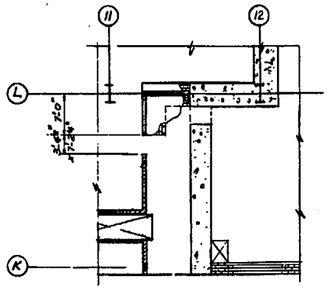

PARTIAL PLAN EL. 757'-6"
6" = 1'-0"

PLAN AT EL. 757'-6"
5" CONC. SLAB W/ 1½" DECK TYP U.N.

* NOTE 1
FLOOR SLAB THICKNESS INDICATED DOES NOT INCLUDE METAL FLOOR DECK DEPTH

LAST BLOCK WALL C NO. USED C-205-41

NOTES CONTINUED
* THE LABELING OF THE MASONRY WALLS ARE IN ACCORDANCE WITH THE NRC BULLETIN 80-11 CONCERNING SAFETY RELATED WALLS EXAMPLE: C-205-1

NOTES:
1. FOR GEN. NOTES & REF. DWGS SEE DWG C-200
2. WORK THIS DWG WITH DWG C-207
3. ⊕ INDICATES EMBEDDED STL. INSERT & FOR BEAM COUNT. FOR LOCATION SEE DWG C-207, FOR DETAILS SEE DWG C-5
4. FOR HATCH DETAILS SEE DWGS C-18 & 14
5. FLOOR PENETRATIONS SHOWN ARE ONLY THOSE THAT REQUIRE ROOF STRAINING. FOR OTHER PENETRATIONS NOT SHOWN SEE DWG C-298.
6. FOR CONC. BLOCK WALL LOCATION & DIMENSION SEE ARCH. DWG A-4
7. FOR FLOOR DRAIN LOCATION SEE DWGS M-509, 506 & 510

DUANE ARNOLD ENERGY CENTER
IES UTILITIES
UPDATED FINAL SAFETY ANALYSIS REPORT

TURBINE BUILDING GROUND FLOOR PLAN AT ELEVATION 757' 6" - SHEET 1

FIGURE 3.5-1

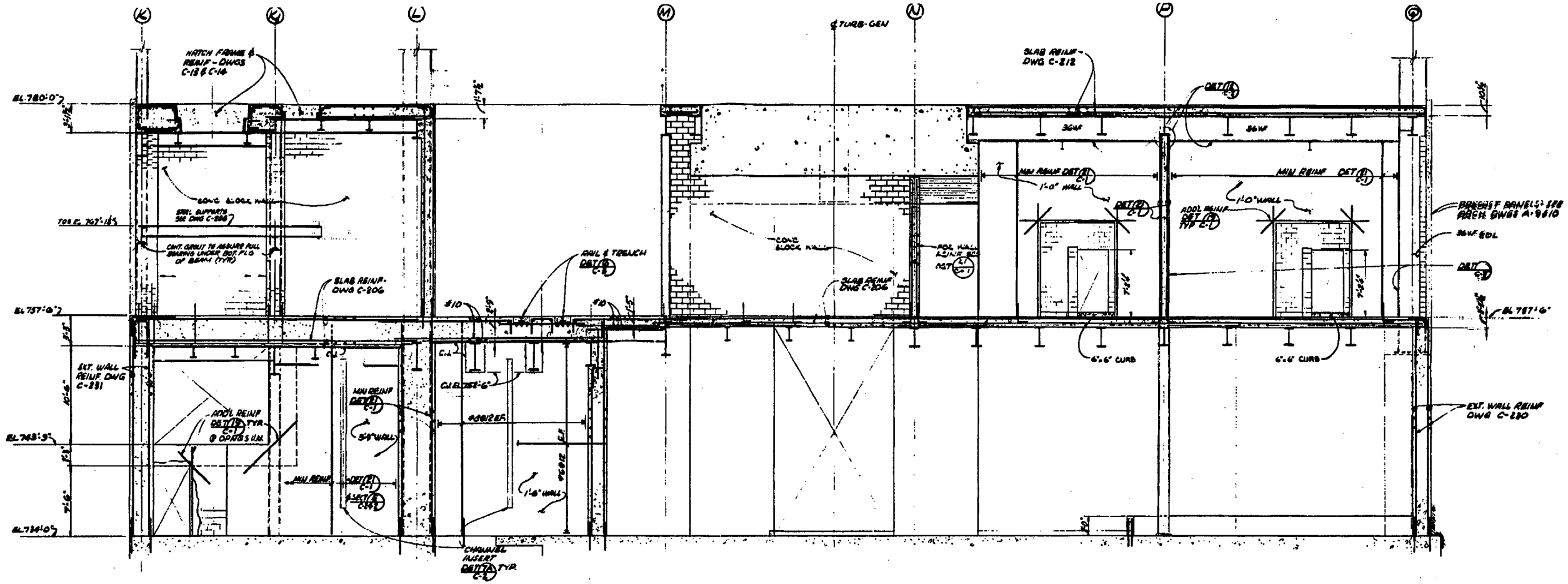

SECTION (A) C-240
1/4" = 1'-0"
FOR LOCATION SEE DWGS C-200, 205 & 211

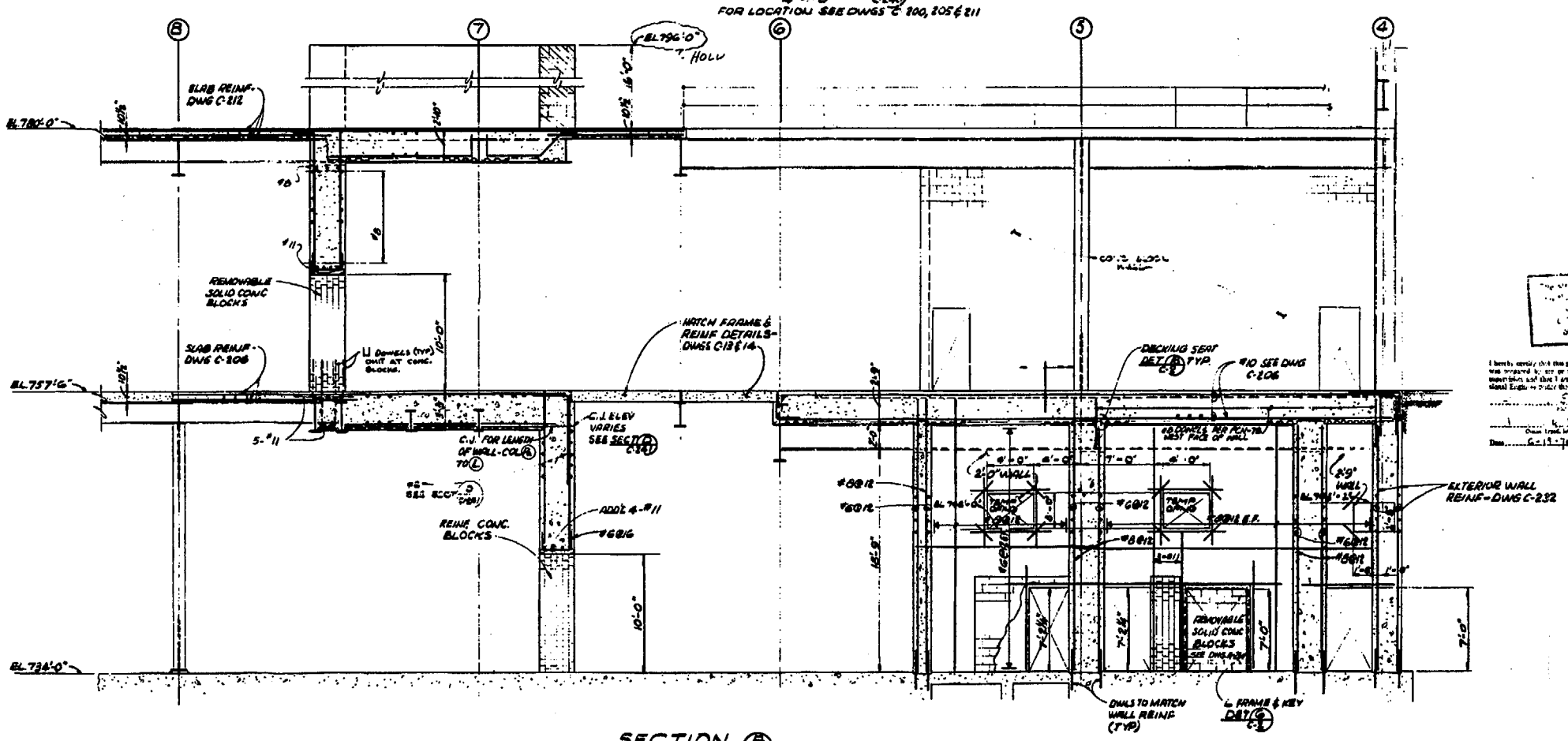

SECTION (B) C-240
1/4" = 1'-0"
FOR LOCATION SEE DWGS C-200, 205, & 211

NOTES:

1. FOR GEN. NOTES & REF DWGS SEE DWG C-200
2. FOR GEN. CONCRETE NOTES & TYPICAL DETAILS SEE DWG C-1
3. FOR MINIMUM WALL & SLAB REINF. SEE DET (A) C-1
4. REINFORCING FOR INTERIOR WALLS & SLABS SHALL BE MINIMUM REINF IN ACCORDANCE WITH DET (A) C-1 UNLESS NOTED OTHERWISE.
5. FOR TYP WALL REINF DETAILS SEE DET (A) C-1
6. FOR WALL DOWELS & LAPPED SPLICES FOR VERTICAL REINF SEE DET (7) C-1 (OMIT 72d STAGGERED SPLICE)
7. FOR DETAIL & LOCATION OF BEAM INSERTS SEE DWGS C-5, C-206, & C-211
8. FOR WALL PENETRATIONS NOT SHOWN SEE DWG C-295
9. CONC FOR INTERIOR WALLS SHALL DEVELOP 3,000 PSI COMPRESSIVE STRENGTH IN 28 DAYS. CLASS B-1 FOR WALLS < 12" CLASS B-2 FOR WALLS ≥ 12"
10. EOL TEMPORARY SPG WALLS SEE DET (9) C-1 & (10) C-1

I hereby certify that this plan, specification or report was prepared by me or under my direct supervision and that I am a duly Registered Professional Engineer under the laws of the State of Iowa.

Date 6-15-78 Reg. No. 6914

DUANE ARNOLD ENERGY CENTER
IES UTILITIES
UPDATED FINAL SAFETY ANALYSIS REPORT

STRUCTURAL DETAILS DIESEL-GENERATOR AREA SECTION

FIGURE 3.5-2

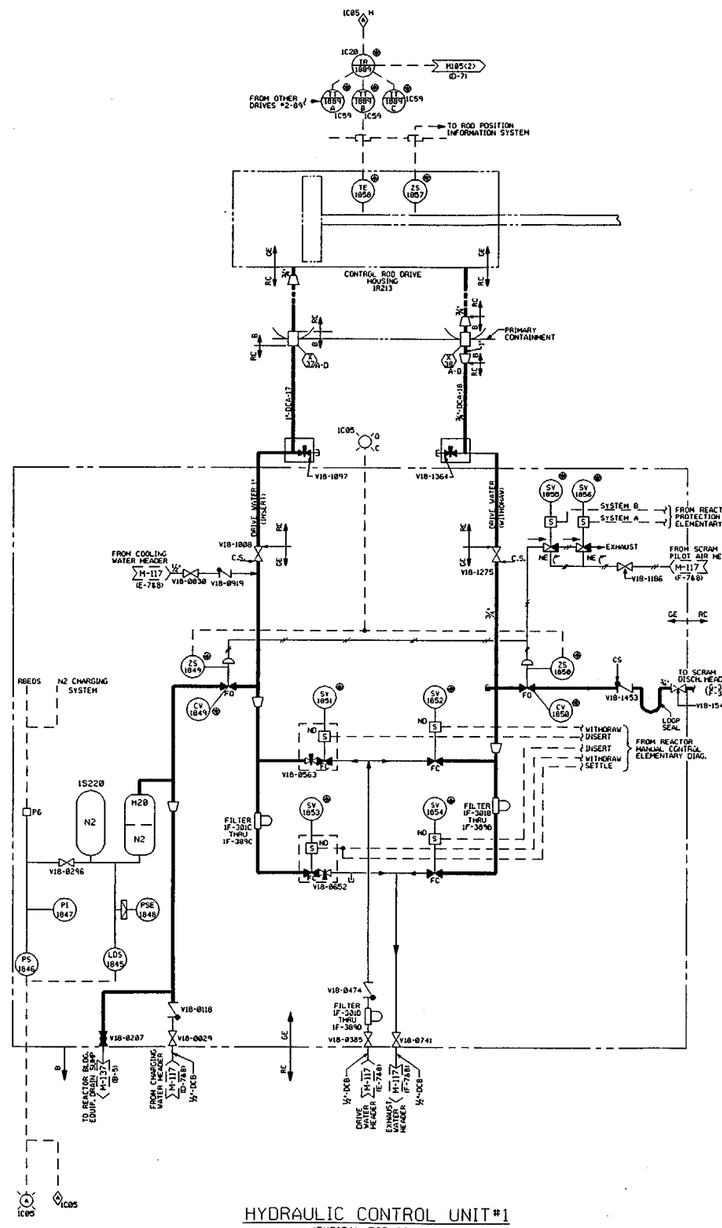

HYDRAULIC CONTROL UNIT*1
(TYPICAL FOR 89 UNITS)
LT-221
(SEE NOTE 2)

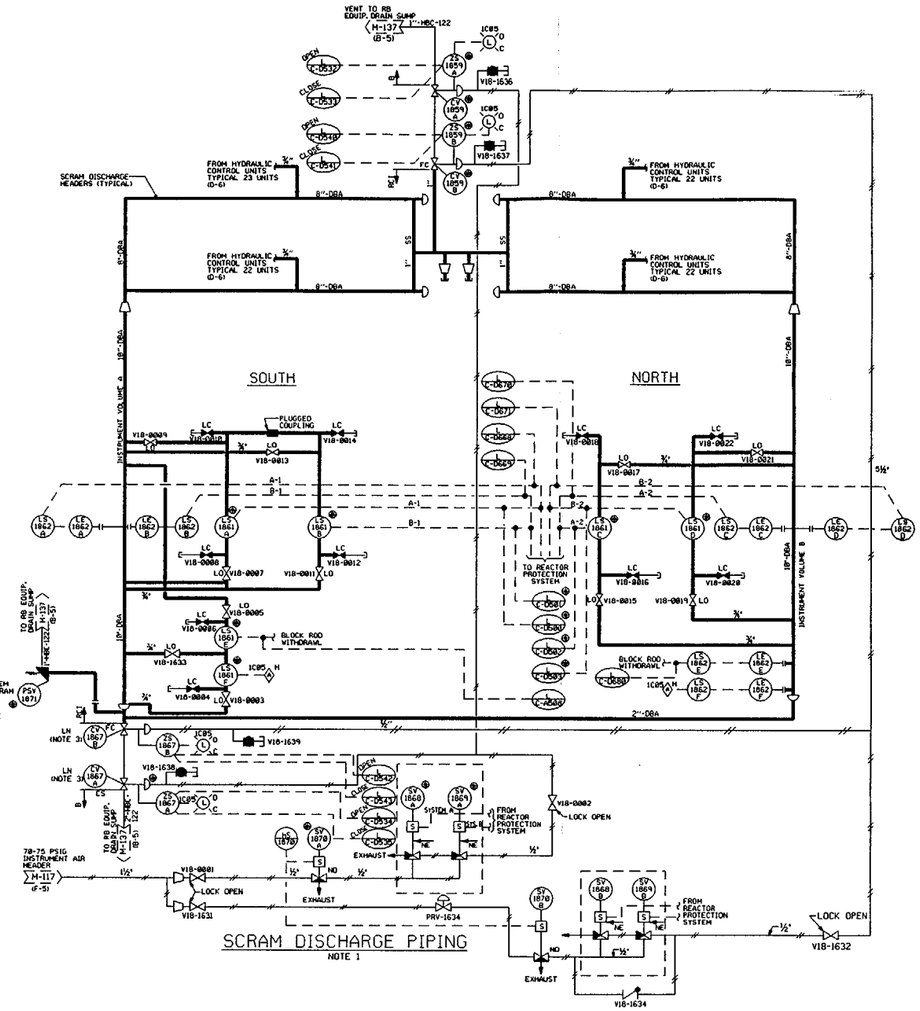

SCRAM DISCHARGE PIPING
NOTE 1

NOTES:

1. FOR RADIATION SHIELDING REQUIREMENTS REFER TO VENDOR DRAWING M115-011
2. HCU VALVES AND INSTRUMENTATION, ARE LISTED IN THE CHAMPS DATABASE BY THE LOCATION (XX-XX). EXAMPLES: CV1849(02-03), V18-0207(42-27)
3. SIDE MOUNTED HANDWHEEL IS LOCKED IN NEUTRAL FOR CV1867A & CV1867B.

DUANE ARNOLD ENERGY CENTER
IES UTILITIES
UPDATED FINAL SAFETY ANALYSIS REPORT

P & ID
CONTROL ROD DRIVE HYDRAULIC SYSTEM

FIGURE 3.9-5 SH. 2

REVISION 15 - 5/00

BECH-M118 REV. 23

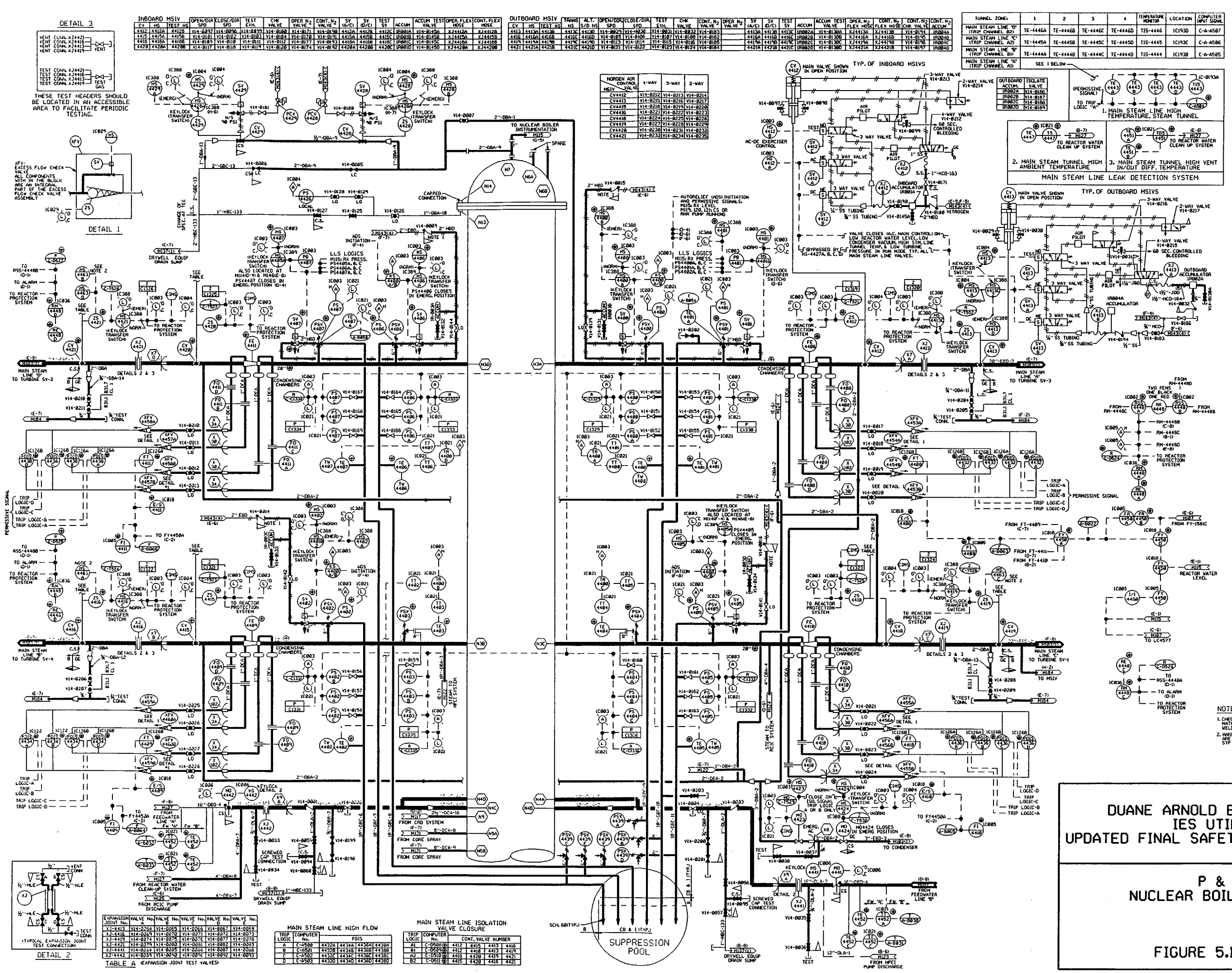

INBOARD MSIV CV	HS	TEST HS	OPEN/DIR SPD	CLOSE/DIR SPD	TEST EXHL	CHK VALVE	OPER N_2 VALVE	CONT. N_2 VALVE	SV (A/C)	SV (D/C)	TEST SV	ACCUM	ACCUM TEST SV	OPER. FLEX HOSE	CONT. N_2 FLEX HOSE
4412	4412A	4412B	V14-0257	V14-0096	V14-0890	V14-0100	V14-0171	V14-0150	4412A	4412B	4412C	1R001A	V14-0145A	X14412A	X14412B
4415	4415A	4415B	V14-0181	V14-0102	V14-0103	V14-0104	V14-0178	V14-0191	4415A	4415B	4415C	1R001B	V14-0145B	X14415A	X14415B
4416	4416A	4416B	V14-0189	V14-0118	V14-0119	V14-0112	V14-0177	V14-0193	4416A	4416B	4416C	1R001C	V14-0145C	X14416A	X14416B
4421	4421A	4421B	V14-0117	V14-0116	V14-0115	V14-0120	V14-0174	V14-0132	4420A	4420B	4420C	1R001D	V14-0145D	X14420A	X14420B

OUTBOARD MSIV CV	HS	TEST HS	OPEN/DIR SPD	CLOSE/DIR SPD	TEST EXHL	CHK VALVE	CONT. N_2 VALVE	OPER N_2 VALVE	SV (A/C)	SV (D/C)	TEST SV	ACCUM	ACCUM TEST SV	OPER. N_2 FLEX HOSE	CONT. N_2 FLEX HOSE	CONT. N_2 CHK VALVE	CONT. N_2 ACCUM
4413	4413A	4413B				V14-0032	V14-0183										
4416	4416A	4416B	4416C	4416D	V14-0029	V14-0028	V14-0182		4416A	4416B	4416C	1R002B	V14-0130A	X14416A	X14416B	V14-0196	1R002B
4419	4419A	4419B	4419C	4419D	V14-0185	V14-0186	V14-0184		4419A	4419B	4419C	1R002C	V14-0130C	X14419A	X14419B	V14-0196	1R002C
4421	4421A	4421B	4421C	4421D	V14-0121	V14-0122	V14-0124		4421A	4421B	4421C	1R002D	V14-0130D	X14421A	X14421B	V14-0197	1R002D

NORGEN AIR CONTROL MSIV VALVE	4-WAY	3-WAY	2-WAY
CV4412	V14-0212	V14-0213	V14-0214
CV4413	V14-0215	V14-0216	V14-0217
CV4415	V14-0218	V14-0219	V14-0220
CV4416	V14-0221	V14-0222	V14-0223
CV4418	V14-0224	V14-0225	V14-0226
CV4419	V14-0227	V14-0228	V14-0229
CV4420	V14-0230	V14-0231	V14-0232
CV4421	V14-0233	V14-0234	V14-0235

TUNNEL ZONE	1	2	3	4	TEMPERATURE MONITOR	LOCATION	COMPUTER INPUT SIGNAL
MAIN STEAM LINE 'D' (TRIP CHANNEL A2)	TE-4446A	TE-4446B	TE-4446C	TE-4446D	TIS-4446	LC1930	C-A-A587
MAIN STEAM LINE 'C' (TRIP CHANNEL A2)	TE-4445A	TE-4445B	TE-4445C	TE-4445D	TIS-4445	LC1930	C-A-A586
MAIN STEAM LINE 'B' (TRIP CHANNEL B1)	TE-4444A	TE-4444B	TE-4444C	TE-4444D	TIS-4444	LC1930	C-A-A585
MAIN STEAM LINE 'A' (TRIP CHANNEL B1)	SEE 1 BELOW						

OUTBOARD ACCUM.	ISOLATE VALVE
1R002A	V14-0186
1R002B	V14-0187
1R002C	V14-0188
1R002D	V14-0189

EXPANSION JOINT No.	VALVE No. A	VALVE No. B	VALVE No. C	VALVE No. D	VALVE No. E
XJ-4413	V14-0064	V14-0065	V14-0066	V14-0067	V14-0068
XJ-4416	V14-0069	V14-0070	V14-0071	V14-0072	V14-0073
XJ-4419	V14-0074	V14-0075	V14-0076	V14-0077	V14-0078
XJ-4421	V14-0079	V14-0080	V14-0081	V14-0082	V14-0083
XJ-4441	V14-0084	V14-0085	V14-0086	V14-0087	V14-0088
XJ-4442	V14-0089	V14-0090	V14-0091	V14-0092	V14-0093

TABLE A (EXPANSION JOINT TEST VALVES)

MAIN STEAM LINE HIGH FLOW

TRIP LOGIC	COMPUTER No.	POIS			
A	C-A500	4432A	4434A	4436A	4438A
B	C-A501	4432B	4434B	4436B	4438B
C	C-A502	4432C	4434C	4436C	4438C
D	C-A503	4432D	4434D	4436D	4438D

MAIN STEAM LINE ISOLATION VALVE CLOSURE

TRIP LOGIC	COMPUTER No.	CONT. VALVE NUMBER			
A1	C-D508	4412	4415	4413	4416
B1	C-D509	4412	4418	4413	4419
A2	C-D510	4416	4420	4419	4421
B2	C-D511	4415	4420	4416	4421

NOTES:

1. CHECK VALVE CONTAINS SOFT SEAT MATERIAL. REMOVE SOFT SEAT BEFORE WELDING OR APPLYING HIGH HEAT.
2. HANDSWITCHES HS4463A,B,C,D ARE ONLY USED TO RUN STP 41A009

DUANE ARNOLD ENERGY CENTER
IES UTILITIES
UPDATED FINAL SAFETY ANALYSIS REPORT

P & ID
NUCLEAR BOILER SYSTEM

FIGURE 5.1-1 SH. 1

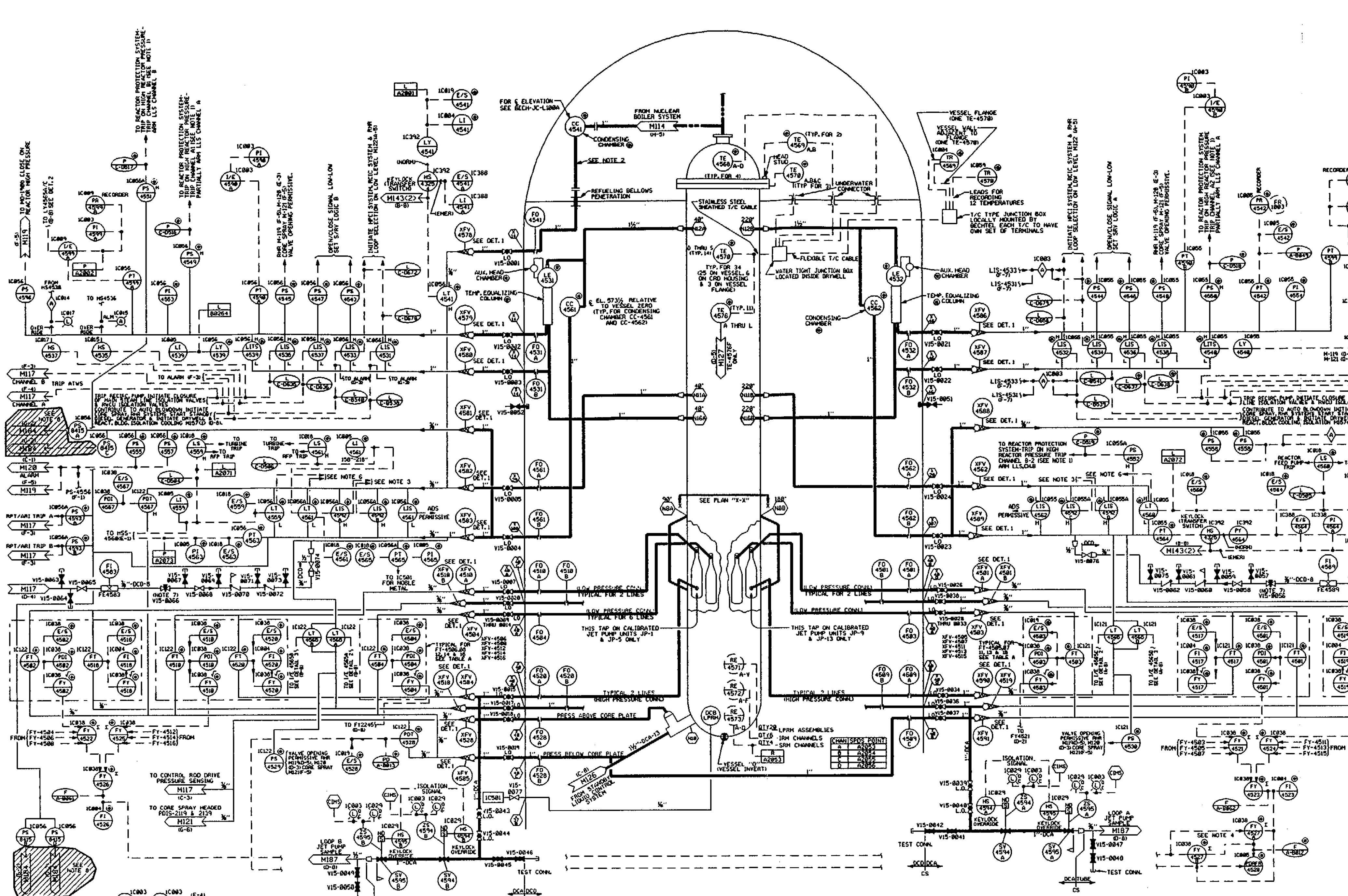

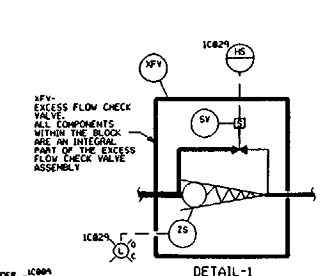

DETAIL-1

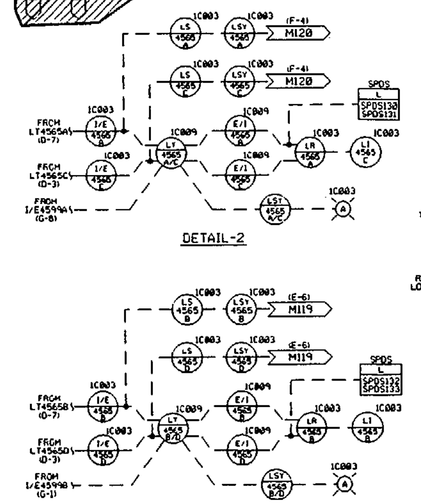

DETAIL-2

DETAIL-3

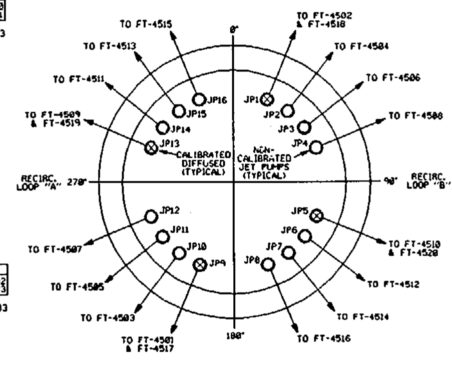

PLAN "X-X"

JET PUMP & TRANSMITTER MATCHING

NOTES:

1. REACTOR PROTECTION SYSTEM SHOWS ON G.E. DOCUMENT 729E611 WHICH IS THE SYSTEM I.E.D. & APED DWGS. 729E616CA SH. 2. ZERO REFERENCES OF LEVEL SETTINGS ARE AT TOP OF ACTIVE FUEL.
2. AN EXPANSION LEG SHALL BE PROVIDED IN INSTRUMENT SENSING LINE BETWEEN CC-4541 AND THE WATER TIGHT PENETRATION SEAL THROUGH BOTTOM OF REACTOR WELL. THE EXPANSION LEG & PIPING INSTALLATION SHALL BE DESIGNED TO ALLOW FOR MAXIMUM CHANGE OF VESSEL LENGTH WITH TEMPERATURE TO AVOID OVER-STRESSING THE PIPING, THE SEAL OR DAMAGE TO THE INSULATION AROUND THE VESSEL.
3. SCRAM AND INITIATE PRIMARY CONTAINMENT ISOLATION EXCEPT RWCU & MAIN STEAM LINE ISOLATION VALVES ON LOW LEVEL TRIP HPCI TURBINE ON HIGH LEVEL.
4. SUMMER FY-4527A & FY-4527B INPUTS AND OUTPUTS SHALL BE INTERLOCKED WITH RECIRC. PUMP MOTOR AND DISCHARGE VALVES SUCH THAT THE INPUTS ARE RUNNING AND THEIR DISCHARGE VALVES ARE OPEN OR BOTH LOOPS ARE SHUTDOWN. THE SIGNALS ARE TO BE SUBTRACTED WHEN ONE JET PUMP LOOP IS IN OPERATION.
5. ALTERNATE SHUTDOWN CAPABILITY SYSTEM ONLY.
6. NOTE THAT THE GEMAC LEVEL TRANSMITTERS HI AND LO TAPS ARE REVERSED WHEN COMPARED WITH THE OTHER LEVEL SWITCHES ON THIS INSTRUMENT RACK.
7. THE METERING VALVE INSTALLED (V15-0056, V15-0066) IS A DOUBLE PATTERN TYPE WITH ONE HANDLE LOCKED IN PLACE BY SET SCREW AND CAPPED TO PREVENT INADVERTENT OPERATION. DO NOT ADJUST THE HANDLE UNDER THE CAP WITHOUT ENGINEERING'S CONCURRENCE. DO NOT ADJUST FLOW ABOVE 0.072 GPM AS THAT WOULD EXCEED THE ANALYZED RANGE. SETTING MAXIMUM FLOW ON METERING VALVES WITH CRD DIFFERENTIAL PRESSURE AT 300-400 PSID AS READ ON PI1025A, AND WITH INLET SIDE OF VALVE (PENETRATING PANEL) FULL CLOSED, OPEN OUTLET SIDE OF VALVE FULL OPEN. SLOWLY OPEN INLET SIDE UNTIL 0.057-0.063 GPM IS REACHED AND STABLE. LOCK INLET SIDE IN POSITION WITH SET SCREW. SEAL INLET SIDE IN POSITION WITH SMALL AMOUNT OF FLUORESCENT RTV. VERIFY OUTLET SIDE CAN BE THROTTLED TO GIVE DESIRED FLOW RATE. INSTALL PROTECTIVE CAP USING ¼" BOLTS, NUTS AND WASHERS.
8. PS8415A-D ARE INSTALLED BUT DECOMMISSIONED/ABANDONED IN PLACE (VALVED OUT OF SERVICE). (01-080)

ELEVATION CORRELATION CHART

REFERENCE	(COLD VESSEL) INCHES ABOVE VESSEL ZERO	TRIPS DESCRIPTION	INSTRUMENT(S) PROVIDING TRIP	REACTOR VESSEL LEVELS (REF. 25)	INDICATED LEVEL TRIP SETTINGS (NOTE 1) SAFEGUARDS LIR 684	FEEDWATER LRS C34-R600
NOZZLE N3 A,B,C,D	620.5					
NOZZLE N12 A,B	572					
FEEDWATER SYSTEM & REACTOR PROTECTION SYSTEM	562.5				218	218
	555.5	TRIP REACTOR FEED PUMPS CLOSE MAIN TURBINE STOP VALVES TRIP RCIC & HPCI TURBINES	ALARM UNIT LS-4559, 60 & 61 LIS-4592A,B,C & D LS-4540 (NOTE 5)	8	211	211
	539.5	HIGH LEVEL ALARM	LRS-4559 & 4560	7		195
	530.5	NORMAL WATER LEVEL	FEEDWATER LEVEL CONTROL SYSTEM	5.6 / 4		186
		LOW LEVEL ALARM	LRS-4559 & 4560		+170 IN. DEC.	
	514.5	SCRAM & CLOSE PRIMARY SYS. ISOLATION VALVES EXCEPT MAIN STEAM LINE & RWCU	LIS-4592A,B,C & D	3	170	
		AUTO DEPRESSURIZATION PERMISSIVE	LIS-4562, 4561		+170 IN. DEC.	
FEEDWATER SYSTEM & REACTOR PROTECTION SYSTEM	502.5				158	158
	493					
NOZZLE N11 A,B	464	INITIATE RCIC, HPCI & SELECT RHR LOOP FOR INJECTION TRIP RECIRC PUMPS, INITIATE ARI & ISOLATE RWCU	LIS-4531,32,33,34 LIS-4535, 4537 LIS-4536, 4538	2	119.5 DEC.	
	408	INITIATE RHR & CORE SPRAY SYSTEMS CONTRIBUTE TO AUTO DEPRESSURIZATION SYSTEM START STANDBY DIESEL	LS-4540 (NOTE 5) LIS-4531,32,33,34	1	64 DEC.	
	362.6	CLOSE MAIN STEAM LINE ISOLATION VALVES	LIS-4535,36,37,38		8	
REACTOR PROTECTION SYSTEM	348					
NOZZLE N16 A,B	344.5					
TOP OF ACTIVE FUEL & INSTRUMENT ZERO	305.5	CONTAINMENT SPRAY PERMISSIVE	LS-4565A LS-4565B LS-4565C LS-4565D	0		
LOWER JET PUMP TAP	127					
NOZZLE N8 A,B	118.5					

TABLE-A

ADDITIONAL INSTRUMENTATION-REF. PLAN-XX

FT ⊕	PENETRATION	RACK NO.	E/S ⊕	PDI ⊕	FY ⊕	MS	ZS	SV	XFV	FO ⊕	FY Σ
4505	X-40B	1C121	4505								4521
4506	X-40A	1C122	4506								4522
4507	X-40B	1C121	4507								4521
4508	X-40A	1C122	4508								4522
4511	X-40D	1C121	4511								4524
4512	X-40C	1C122	4512								4525
4513	X-40D	1C121	4513								4524
4514	X-40C	1C122	4514								4525
4515	X-40D	1C121	4515								4524
4516	X-40C	1C122	4516								4525

PRIMARY PROTECTION	COMPUTER POINT
MANUAL SCRAM TRIP SYSTEM "A"	C-0536
MANUAL SCRAM TRIP SYSTEM "B"	C-0537
REACTOR SCRAM TRIP SYSTEM "A"	C-0538
REACTOR SCRAM TRIP SYSTEM "B"	C-0539

T.I.P. RADIATION MONITOR

INSTRUMENT TAG NO.	LOCATION
RM-4574	1C013
RR-4574	1C013
RE-4574A	S.E. CORNER OF R.B. ADJAC. TO CONTAINM.
RE-4574B	
RE-4574C	

DUANE ARNOLD ENERGY CENTER
IES UTILITIES
UPDATED FINAL SAFETY ANALYSIS REPORT

P & ID
REACTOR VESSEL INSTRUMENTATION

FIGURE 5.1-1 SH. 2

REVISION 15 - 5/00

BECH-M115 REV. 52

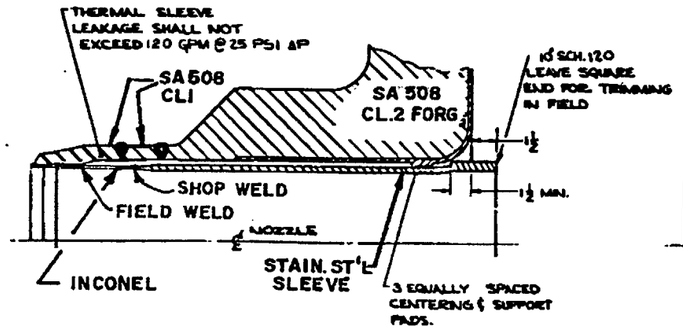

FEEDWATER NOZZLE

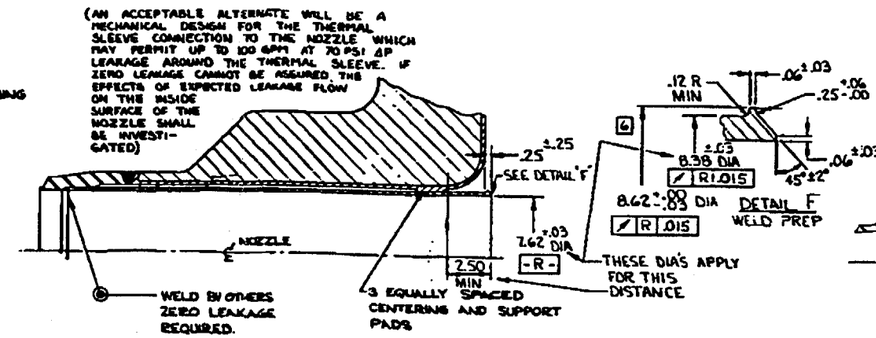

CORE SPRAY NOZZLE

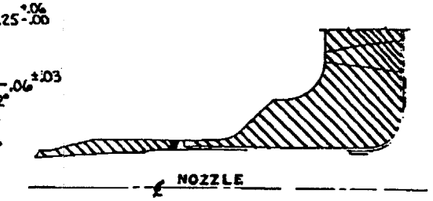

Figure modified to reflect removal of thermal sleeve.

CONTROL ROD DRIVE HYDRAULIC SYSTEM RETURN NOZZLE

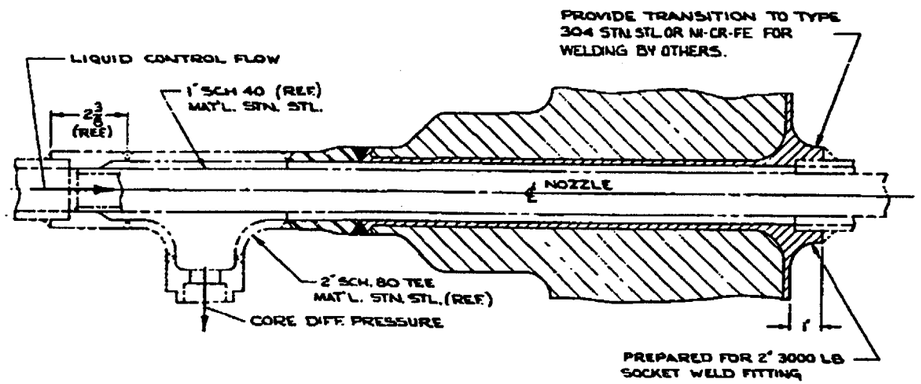

CORE DIFFERENTIAL PRESSURE & LIQUID CONTROL NOZZLE

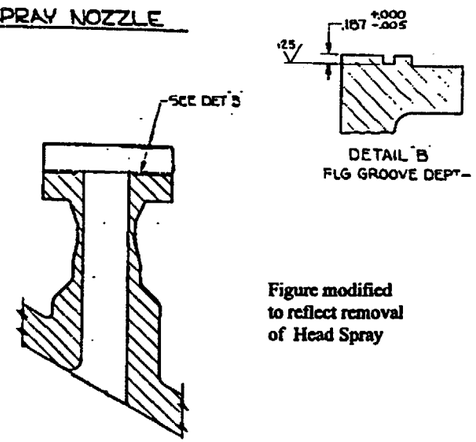

Figure modified to reflect removal of Head Spray

INSTR. NOZZLE ON HEAD

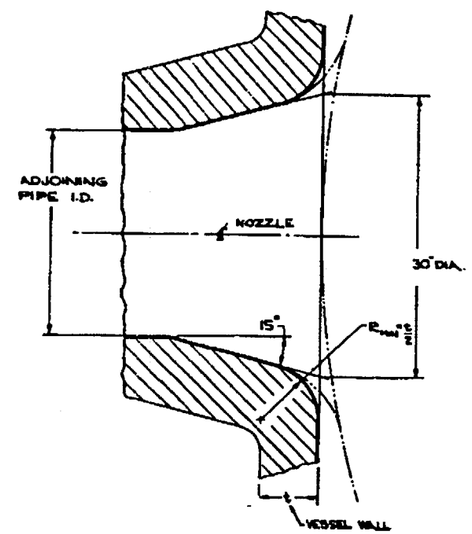

RECIRCULATION OUTLET NOZZLE

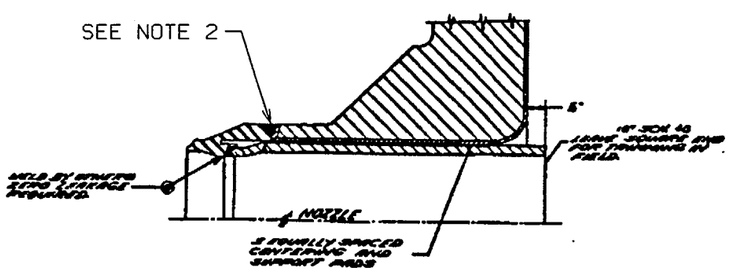

RECIRCULATION INLET NOZZLE

NOTES:

1. THIS DRAWING PROVIDES FUNCTIONAL REQUIREMENTS & IS NOT INDICATIVE OF DETAIL DESIGN OF NOZZLES OR THERMAL SLEEVES. THE SUPPLIER SHALL PROVIDE DETAIL DESIGN TO CARRY IMPOSED LOADS & ACCOMMODATE THERMAL TRANSIENTS.
2. NOZZLES N2B AND N2D (SAFE-END TO NOZZLE) WELDS WERE REPAIRED SEE REFERENCE 18 OF SECTION 5.4.

DUANE ARNOLD ENERGY CENTER
IES UTILITIES
UPDATED FINAL SAFETY ANALYSIS REPORT

REACTOR VESSEL NOZZLES AND PENETRATIONS

FIGURE 5.3-4 SH. 1

REVISION 15 - 5/00

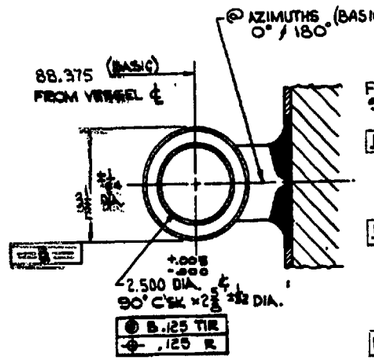

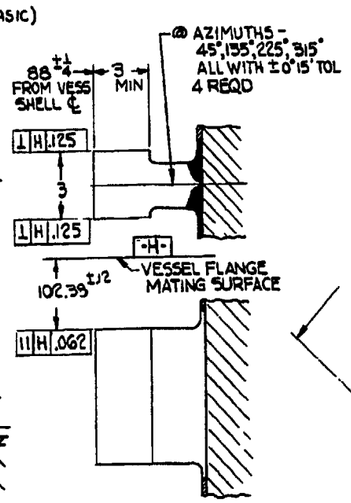

STEAM DRYER SUP BRKT

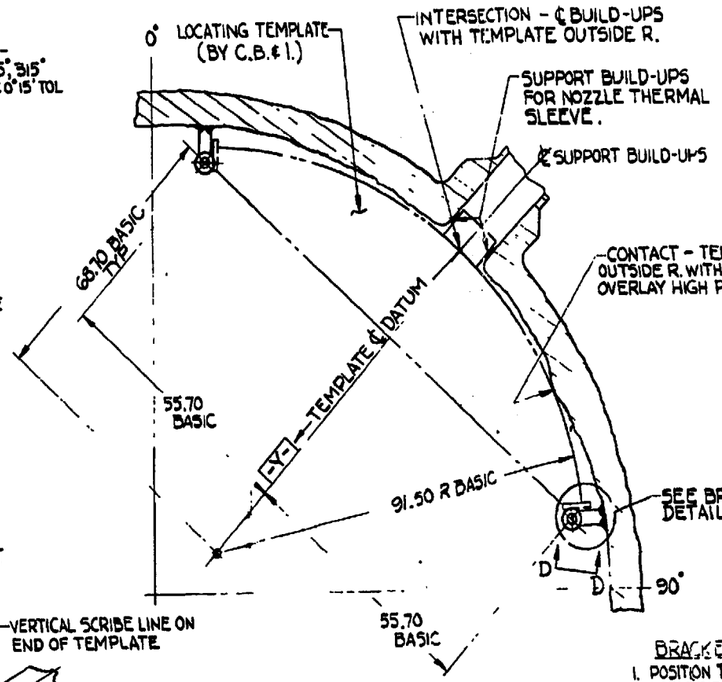

FEEDWATER SPARGER BRACKET LOCATION
(TYP 4 PLACES ON N4 FEEDWATER NOZZLES)

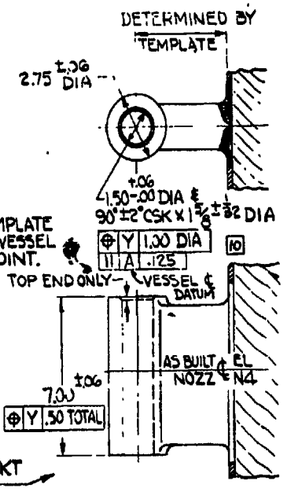

BRACKET DETAIL
TYP 2 PLACES

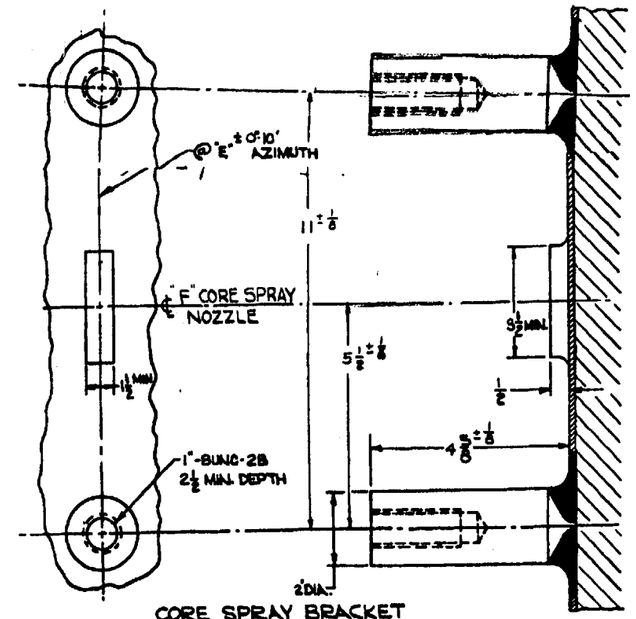

CORE SPRAY BRACKET

QUAN	E	F
2	30°, 150°	5A
2	210°, 330°	5B

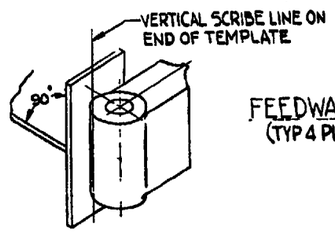

VIEW D-D

BRACKET LOCATION PROCEDURE

1. POSITION TEMPLATE ON ℄ OF SUPPORT BUILD-UPS
2. LOCATE TEMPLATE PARALLEL TO VESSEL FLANGE MATING SURFACE WITHIN .25 TOTAL & IN CONTACT WITH VESSEL I.D. AT HIGH POINT OF OVERLAY.
3. ROTATE TEMPLATE UNTIL SCRIBE LINES ON EACH END OF TEMPLATE ARE EQUIDISTANT FROM VESSEL OVERLAY. (MAINTAIN STEP 2 REQUIREMENTS.)
4. LOCATE BRACKETS ON AS BUILT ℄ EL OF APPROPRIATE N4 NOZZLE, ALIGNING HOLE IN BRACKET WITH SCRIBE LINE ON END OF TEMPLATE.

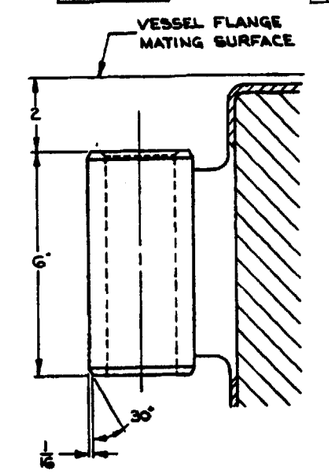

GUIDE ROD BRACKET

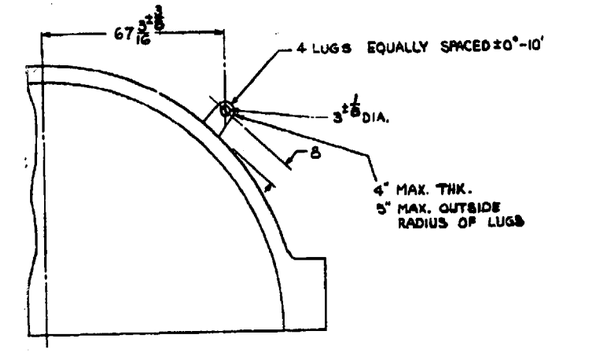

TOP HEAD LIFTING LUGS

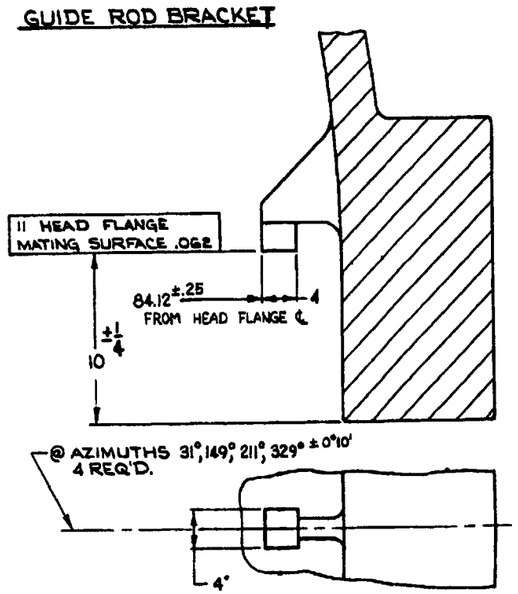

DRYER HOLD DOWN BRACKET

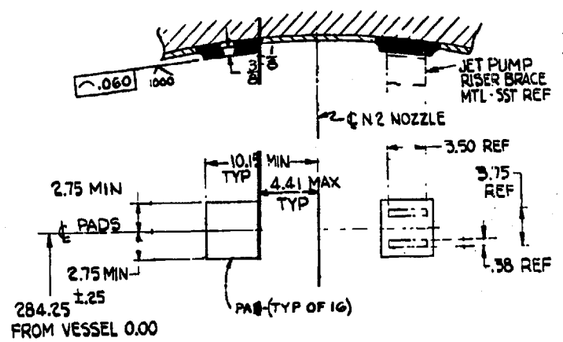

JET PUMP RISER SUPPORT PAD

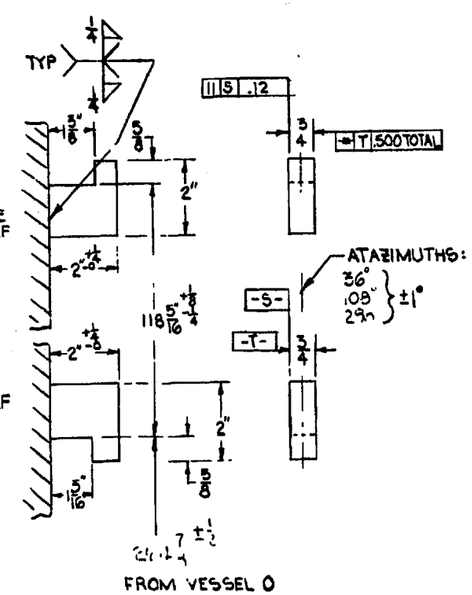

SURVEILLANCE SPECIMEN BRACKETS

DUANE ARNOLD ENERGY CENTER
IES UTILITIES
UPDATED FINAL SAFETY ANALYSIS REPORT

REACTOR VESSEL BRACKET ARRANGEMENT

FIGURE 5.3-6

THERMOCOUPLE SERVICE	RECIRC PUMP 1P201A	RECIRC PUMP 1P201B
THRUST BEARING UPPER FACE	TE4600A	TE4600M
THRUST BEARING LOWER FACE	TE4600B	TE4600N
UPPER GUIDE BEARING	TE4600C	TE4600P
MOTOR WINDING 'A'	TE4600D	TE4600Q
MOTOR WINDING 'B'	TE4600E	TE4600R
MOTOR WINDING 'C'	TE4600F	TE4600S
LOWER GUIDE BEARING	TE4600G	TE4600T
UPPER SEAL CAVITY	TE4600H	TE4600U
LOWER SEAL CAVITY	TE4600J	TE4600V
MOTOR BEARING OIL COOLING WATER	TE4600K	TE4600X
SEAL CAVITY COOLING WATER	TE4600L	TE4600Z

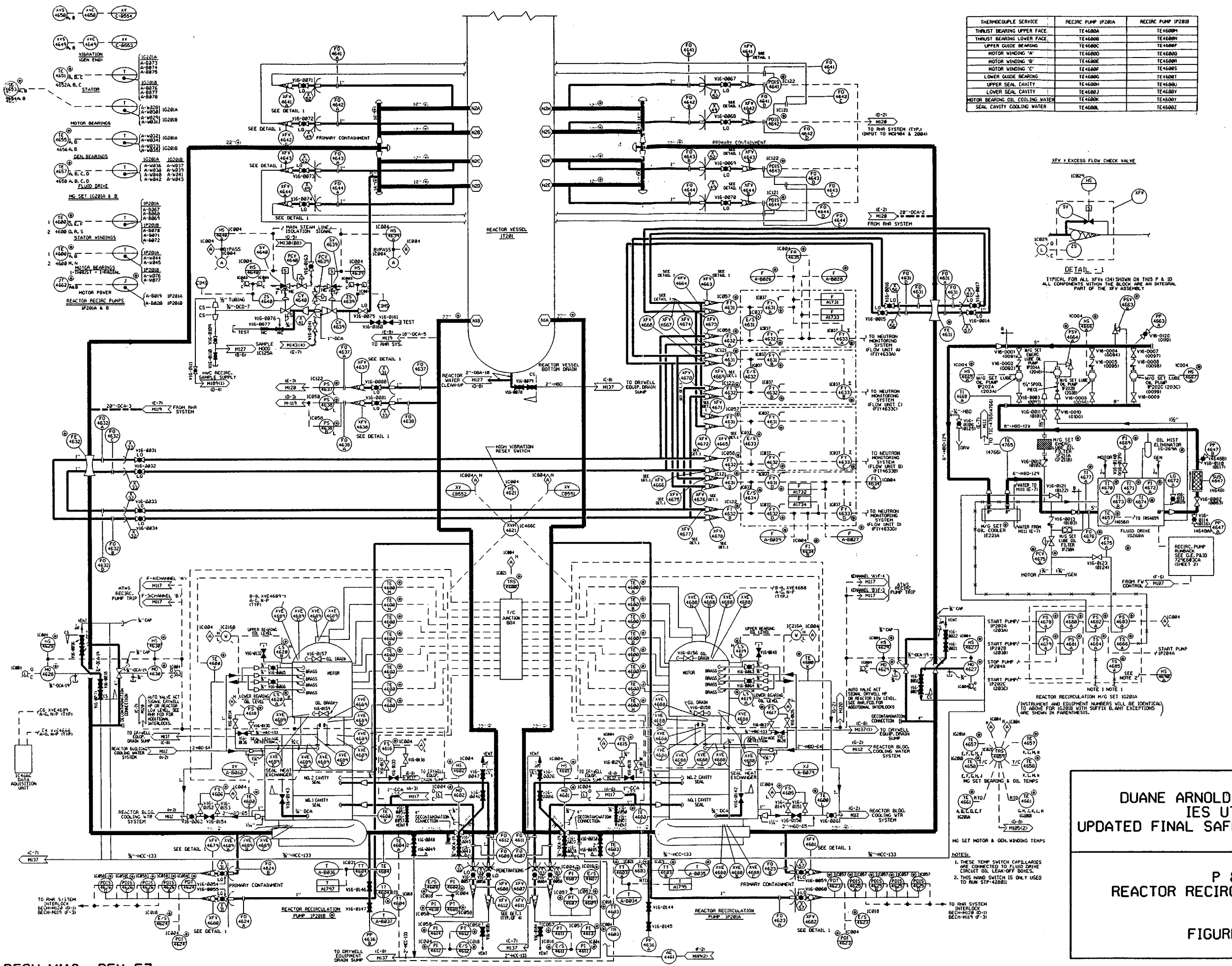

DUANE ARNOLD ENERGY CENTER
IES UTILITIES
UPDATED FINAL SAFETY ANALYSIS REPORT

P & ID
REACTOR RECIRCULATION SYSTEM

FIGURE 5.4-4

BECH-M116 REV. 57

REVISION 15 - 5/00

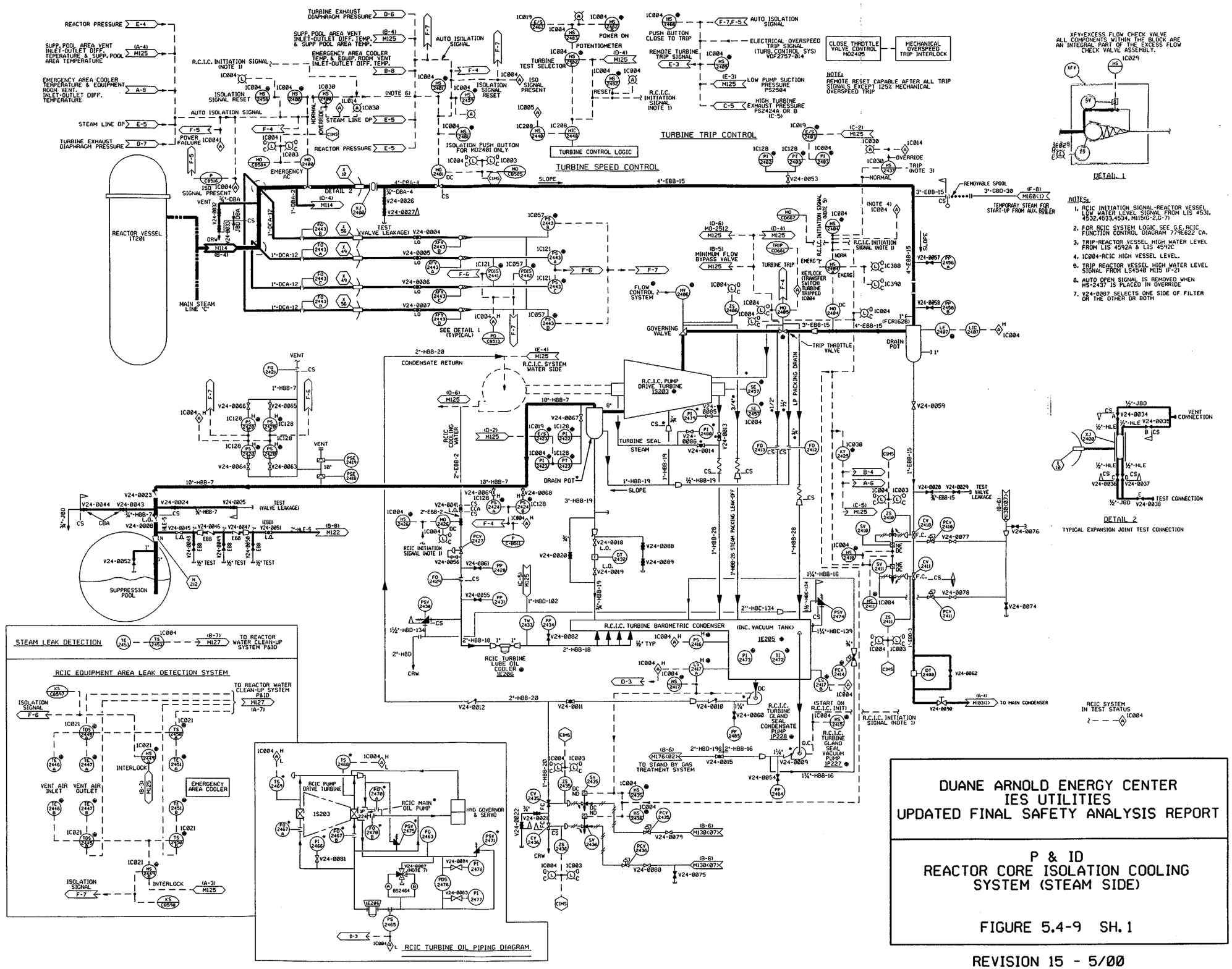

DUANE ARNOLD ENERGY CENTER
IES UTILITIES
UPDATED FINAL SAFETY ANALYSIS REPORT

P & ID
REACTOR CORE ISOLATION COOLING SYSTEM (STEAM SIDE)

FIGURE 5.4-9 SH. 1

BECH-M124 REV. 45

REVISION 15 - 5/00

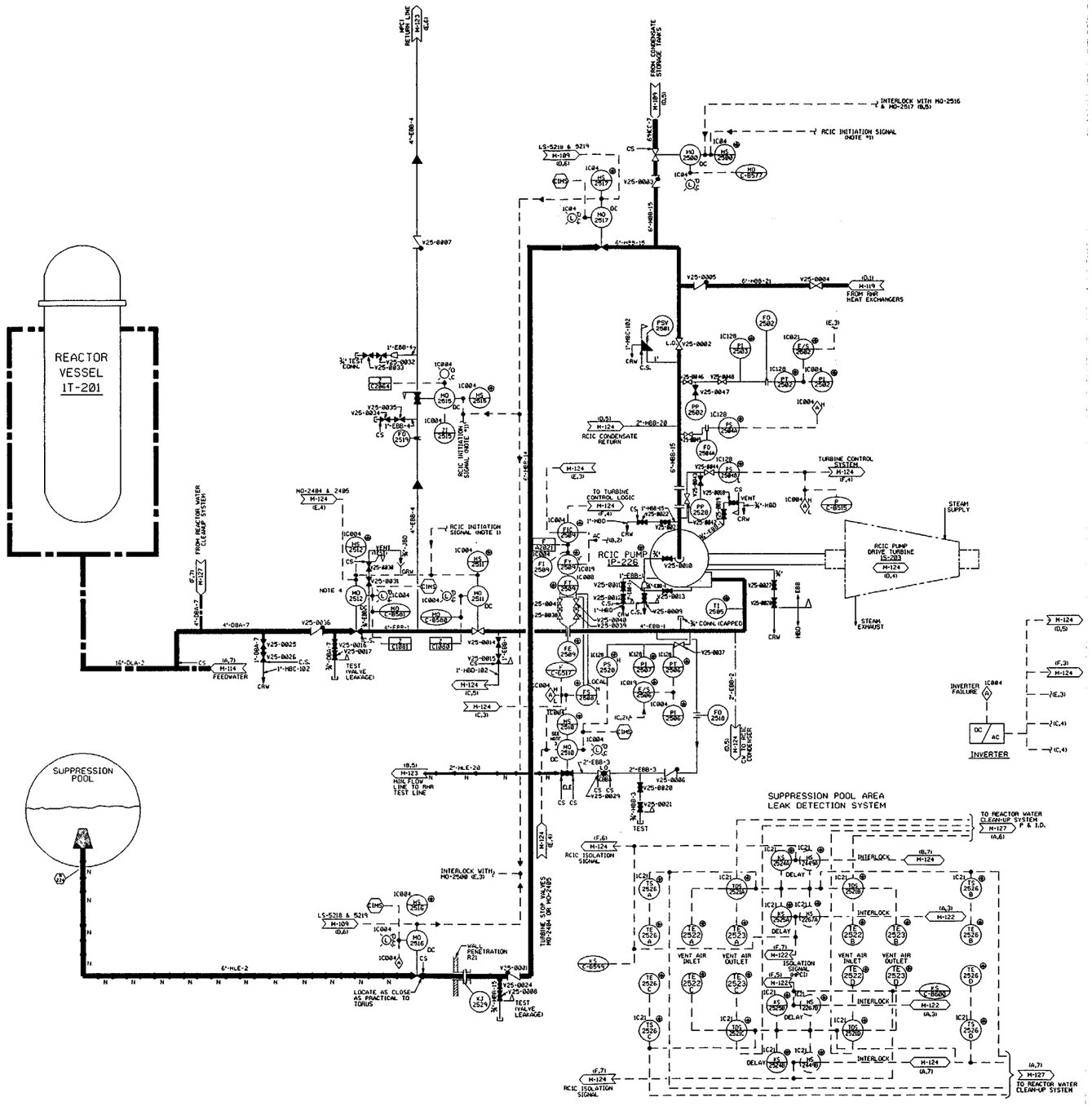

NOTES:

1. RCIC INITIATION SIGNAL - REACTOR VESSEL LOW WATER LEVEL SIGNAL FROM LIS 4531, 4532, 4533, 4534, M-155 (G,2 G,7).
2. FOR RCIC SYSTEM LOGIC, SEE G.E. RCIC FUNCTIONAL CONTROL DIAGRAM 729E622CA.
3. THIS VALVE WILL NOT AUTOMATICALLY OPEN (CLOSE) UNLESS IT HAS BEEN CLOSED (OPEN) FOR A NOMINAL TWO SECONDS. THIS IS TO PREVENT CHALLENGING THE ELECTRICAL AND MECHANICAL INTERLOCKS ASSOCIATED WITH THE MOTOR CONTACTORS.
4. MO-2512 HAS A 1/16" DIAMETER HOLE DRILLED ON THE INBOARD DISC FACE TO PREVENT POTENTIAL PRESSURE LOCKING.

DUANE ARNOLD ENERGY CENTER
IES UTILITIES
UPDATED FINAL SAFETY ANALYSIS REPORT

P & ID
REACTOR CORE ISOLATION COOLING SYSTEM (WATER SIDE)

FIGURE 5.4-9 SH. 2

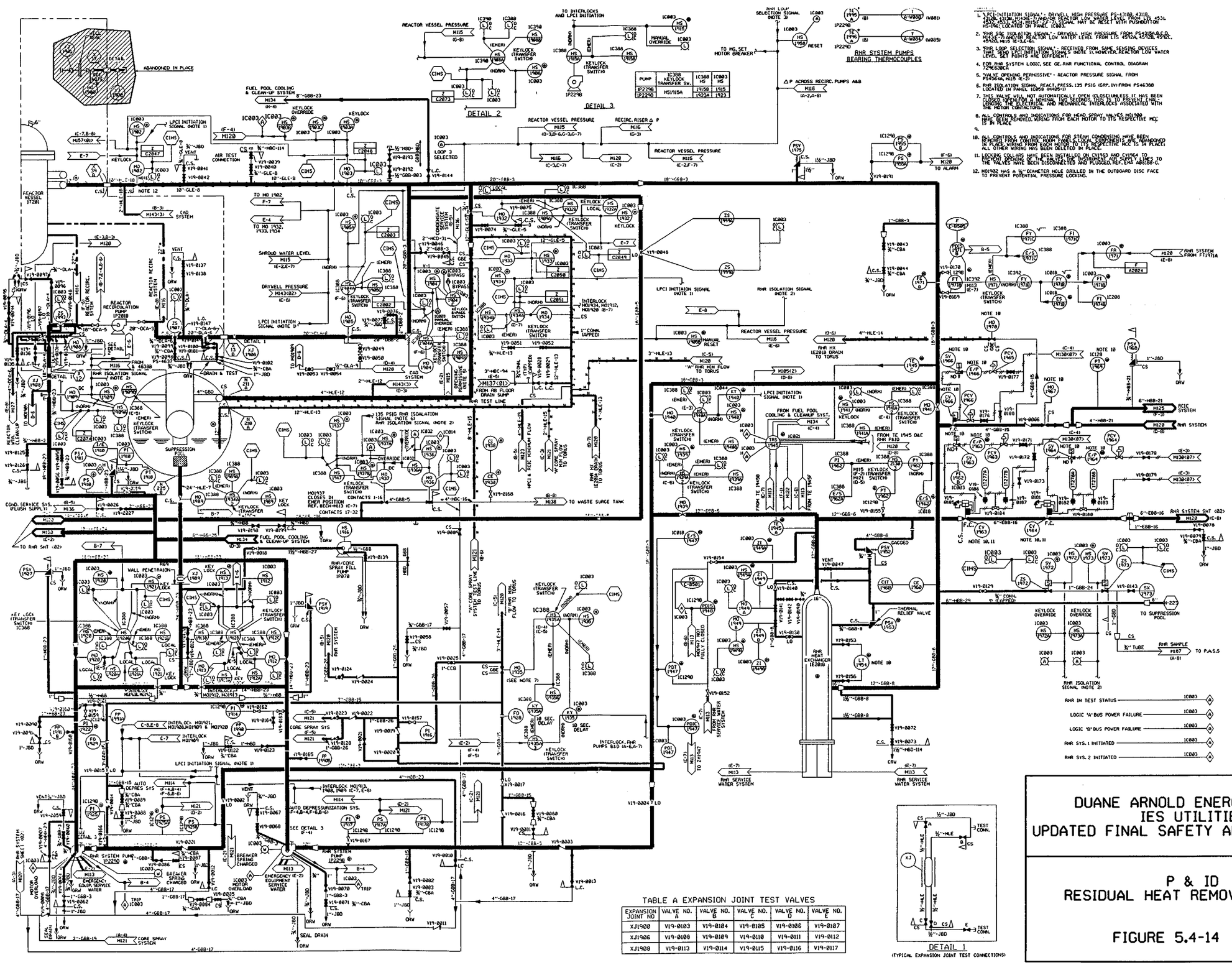

1. LPCI INITIATION SIGNAL: • DRYWELL HIGH PRESSURE PS-4128A,4211B, 4212A,4213A,4214A,4215A,4216A,4217A,4218A,4219A,4220A,4221A,4222A,4223A,4224A,4225A,4226A,4227A,4228A,4229A,4230A,4231A,4232A,4233A,4234A,4235A,4236A,4237A,4238A,4239A,4240A,4241A,4242A,4243A,4244A,4245A,4246A,4247A,4248A,4249A,4250A,4251A,4252A,4253A,4254A,4255A,4256A,4257A,4258A,4259A,4260A,4261A,4262A,4263A,4264A,4265A,4266A,4267A,4268A,4269A,4270A,4271A,4272A,4273A,4274A,4275A,4276A,4277A,4278A,4279A,4280A,4281A,4282A,4283A,4284A,4285A,4286A,4287A,4288A,4289A,4290A,4291A,4292A,4293A,4294A,4295A,4296A,4297A,4298A,4299A,4300A,4301A,4302A,4303A,4304A,4305A,4306A,4307A,4308A,4309A,4310A,4311A,4312A,4313A,4314A,4315A,4316A,4317A,4318A,4319A,4320A,4321A,4322A,4323A,4324A,4325A,4326A,4327A,4328A,4329A,4330A,4331A,4332A,4333A,4334A,4335A,4336A,4337A,4338A,4339A,4340A,4341A,4342A,4343A,4344A,4345A,4346A,4347A,4348A,4349A,4350A,4351A,4352A,4353A,4354A,4355A,4356A,4357A,4358A,4359A,4360A,4361A,4362A,4363A,4364A,4365A,4366A,4367A,4368A,4369A,4370A,4371A,4372A,4373A,4374A,4375A,4376A,4377A,4378A,4379A,4380A,4381A,4382A,4383A,4384A,4385A,4386A,4387A,4388A,4389A,4390A,4391A,4392A,4393A,4394A,4395A,4396A,4397A,4398A,4399A,4400A,4401A,4402A,4403A,4404A,4405A,4406A,4407A,4408A,4409A,4410A,4411A,4412A,4413A,4414A,4415A,4416A,4417A,4418A,4419A,4420A,4421A,4422A,4423A,4424A,4425A,4426A,4427A,4428A,4429A,4430A,4431A,4432A,4433A,4434A,4435A,4436A,4437A,4438A,4439A,4440A,4441A,4442A,4443A,4444A,4445A,4446A,4447A,4448A,4449A,4450A,4451A,4452A,4453A,4454A,4455A,4456A,4457A,4458A,4459A,4460A,4461A,4462A,4463A,4464A,4465A,4466A,4467A,4468A,4469A,4470A,4471A,4472A,4473A,4474A,4475A,4476A,4477A,4478A,4479A,4480A,4481A,4482A,4483A,4484A,4485A,4486A,4487A,4488A,4489A,4490A,4491A,4492A,4493A,4494A,4495A,4496A,4497A,4498A,4499A,4500A,4501A,4502A,4503A,4504A,4505A,4506A,4507A,4508A,4509A,4510A,4511A,4512A,4513A,4514A,4515A,4516A,4517A,4518A,4519A,4520A,4521A,4522A,4523A,4524A,4525A,4526A,4527A,4528A,4529A,4530A,4531A,4532A,4533A,4534A,4535A,4536A,4537A,4538A,4539A,4540A,4541A,4542A,4543A,4544A,4545A,4546A,4547A,4548A,4549A,4550A,4551A,4552A,4553A,4554A,4555A,4556A,4557A,4558A,4559A,4560A,4561A,4562A,4563A,4564A,4565A,4566A,4567A,4568A,4569A,4570A,4571A,4572A,4573A,4574A,4575A,4576A,4577A,4578A,4579A,4580A,4581A,4582A,4583A,4584A,4585A,4586A,4587A,4588A,4589A,4590A,4591A,4592A,4593A,4594A,4595A,4596A,4597A,4598A,4599A,4600A,4601A,4602A,4603A,4604A,4605A,4606A,4607A,4608A,4609A,4610A,4611A,4612A,4613A,4614A,4615A,4616A,4617A,4618A,4619A,4620A,4621A,4622A,4623A,4624A,4625A,4626A,4627A,4628A,4629A,4630A,4631A,4632A,4633A,4634A,4635A,4636A,4637A,4638A,4639A,4640A,4641A,4642A,4643A,4644A,4645A,4646A,4647A,4648A,4649A,4650A,4651A,4652A,4653A,4654A,4655A,4656A,4657A,4658A,4659A,4660A,4661A,4662A,4663A,4664A,4665A,4666A,4667A,4668A,4669A,4670A,4671A,4672A,4673A,4674A,4675A,4676A,4677A,4678A,4679A,4680A,4681A,4682A,4683A,4684A,4685A,4686A,4687A,4688A,4689A,4690A,4691A,4692A,4693A,4694A,4695A,4696A,4697A,4698A,4699A,4700A,4701A,4702A,4703A,4704A,4705A,4706A,4707A,4708A,4709A,4710A,4711A,4712A,4713A,4714A,4715A,4716A,4717A,4718A,4719A,4720A,4721A,4722A,4723A,4724A,4725A,4726A,4727A,4728A,4729A,4730A,4731A,4732A,4733A,4734A,4735A,4736A,4737A,4738A,4739A,4740A,4741A,4742A,4743A,4744A,4745A,4746A,4747A,4748A,4749A,4750A,4751A,4752A,4753A,4754A,4755A,4756A,4757A,4758A,4759A,4760A,4761A,4762A,4763A,4764A,4765A,4766A,4767A,4768A,4769A,4770A,4771A,4772A,4773A,4774A,4775A,4776A,4777A,4778A,4779A,4780A,4781A,4782A,4783A,4784A,4785A,4786A,4787A,4788A,4789A,4790A,4791A,4792A,4793A,4794A,4795A,4796A,4797A,4798A,4799A,4800A,4801A,4802A,4803A,4804A,4805A,4806A,4807A,4808A,4809A,4810A,4811A,4812A,4813A,4814A,4815A,4816A,4817A,4818A,4819A,4820A,4821A,4822A,4823A,4824A,4825A,4826A,4827A,4828A,4829A,4830A,4831A,4832A,4833A,4834A,4835A,4836A,4837A,4838A,4839A,4840A,4841A,4842A,4843A,4844A,4845A,4846A,4847A,4848A,4849A,4850A,4851A,4852A,4853A,4854A,4855A,4856A,4857A,4858A,4859A,4860A,4861A,4862A,4863A,4864A,4865A,4866A,4867A,4868A,4869A,4870A,4871A,4872A,4873A,4874A,4875A,4876A,4877A,4878A,4879A,4880A,4881A,4882A,4883A,4884A,4885A,4886A,4887A,4888A,4889A,4890A,4891A,4892A,4893A,4894A,4895A,4896A,4897A,4898A,4899A,4900A,4901A,4902A,4903A,4904A,4905A,4906A,4907A,4908A,4909A,4910A,4911A,4912A,4913A,4914A,4915A,4916A,4917A,4918A,4919A,4920A,4921A,4922A,4923A,4924A,4925A,4926A,4927A,4928A,4929A,4930A,4931A,4932A,4933A,4934A,4935A,4936A,4937A,4938A,4939A,4940A,4941A,4942A,4943A,4944A,4945A,4946A,4947A,4948A,4949A,4950A,4951A,4952A,4953A,4954A,4955A,4956A,4957A,4958A,4959A,4960A,4961A,4962A,4963A,4964A,4965A,4966A,4967A,4968A,4969A,4970A,4971A,4972A,4973A,4974A,4975A,4976A,4977A,4978A,4979A,4980A,4981A,4982A,4983A,4984A,4985A,4986A,4987A,4988A,4989A,4990A,4991A,4992A,4993A,4994A,4995A,4996A,4997A,4998A,4999A,5000A,5001A,5002A,5003A,5004A,5005A,5006A,5007A,5008A,5009A,5010A,5011A,5012A,5013A,5014A,5015A,5016A,5017A,5018A,5019A,5020A,5021A,5022A,5023A,5024A,5025A,5026A,5027A,5028A,5029A,5030A,5031A,5032A,5033A,5034A,5035A,5036A,5037A,5038A,5039A,5040A,5041A,5042A,5043A,5044A,5045A,5046A,5047A,5048A,5049A,5050A,5051A,5052A,5053A,5054A,5055A,5056A,5057A,5058A,5059A,5060A,5061A,5062A,5063A,5064A,5065A,5066A,5067A,5068A,5069A,5070A,5071A,5072A,5073A,5074A,5075A,5076A,5077A,5078A,5079A,5080A,5081A,5082A,5083A,5084A,5085A,5086A,5087A,5088A,5089A,5090A,5091A,5092A,5093A,5094A,5095A,5096A,5097A,5098A,5099A,5100A,5101A,5102A,5103A,5104A,5105A,5106A,5107A,5108A,5109A,5110A,5111A,5112A,5113A,5114A,5115A,5116A,5117A,5118A,5119A,5120A,5121A,5122A,5123A,5124A,5125A,5126A,5127A,5128A,5129A,5130A,5131A,5132A,5133A,5134A,5135A,5136A,5137A,5138A,5139A,5140A,5141A,5142A,5143A,5144A,5145A,5146A,5147A,5148A,5149A,5150A,5151A,5152A,5153A,5154A,5155A,5156A,5157A,5158A,5159A,5160A,5161A,5162A,5163A,5164A,5165A,5166A,5167A,5168A,5169A,5170A,5171A,5172A,5173A,5174A,5175A,5176A,5177A,5178A,5179A,5180A,5181A,5182A,5183A,5184A,5185A,5186A,5187A,5188A,5189A,5190A,5191A,5192A,5193A,5194A,5195A,5196A,5197A,5198A,5199A,5200A,5201A,5202A,5203A,5204A,5205A,5206A,5207A,5208A,5209A,5210A,5211A,5212A,5213A,5214A,5215A,5216A,5217A,5218A,5219A,5220A,5221A,5222A,5223A,5224A,5225A,5226A,5227A,5228A,5229A,5230A,5231A,5232A,5233A,5234A,5235A,5236A,5237A,5238A,5239A,5240A,5241A,5242A,5243A,5244A,5245A,5246A,5247A,5248A,5249A,5250A,5251A,5252A,5253A,5254A,5255A,5256A,5257A,5258A,5259A,5260A,5261A,5262A,5263A,5264A,5265A,5266A,5267A,5268A,5269A,5270A,5271A,5272A,5273A,5274A,5275A,5276A,5277A,5278A,5279A,5280A,5281A,5282A,5283A,5284A,5285A,5286A,5287A,5288A,5289A,5290A,5291A,5292A,5293A,5294A,5295A,5296A,5297A,5298A,5299A,5300A,5301A,5302A,5303A,5304A,5305A,5306A,5307A,5308A,5309A,5310A,5311A,5312A,5313A,5314A,5315A,5316A,5317A,5318A,5319A,5320A,5321A,5322A,5323A,5324A,5325A,5326A,5327A,5328A,5329A,5330A,5331A,5332A,5333A,5334A,5335A,5336A,5337A,5338A,5339A,5340A,5341A,5342A,5343A,5344A,5345A,5346A,5347A,5348A,5349A,5350A,5351A,5352A,5353A,5354A,5355A,5356A,5357A,5358A,5359A,5360A,5361A,5362A,5363A,5364A,5365A,5366A,5367A,5368A,5369A,5370A,5371A,5372A,5373A,5374A,5375A,5376A,5377A,5378A,5379A,5380A,5381A,5382A,5383A,5384A,5385A,5386A,5387A,5388A,5389A,5390A,5391A,5392A,5393A,5394A,5395A,5396A,5397A,5398A,5399A,5400A,5401A,5402A,5403A,5404A,5405A,5406A,5407A,5408A,5409A,5410A,5411A,5412A,5413A,5414A,5415A,5416A,5417A,5418A,5419A,5420A,5421A,5422A,5423A,5424A,5425A,5426A,5427A,5428A,5429A,5430A,5431A,5432A,5433A,5434A,5435A,5436A,5437A,5438A,5439A,5440A,5441A,5442A,5443A,5444A,5445A,5446A,5447A,5448A,5449A,5450A,5451A,5452A,5453A,5454A,5455A,5456A,5457A,5458A,5459A,5460A,5461A,5462A,5463A,5464A,5465A,5466A,5467A,5468A,5469A,5470A,5471A,5472A,5473A,5474A,5475A,5476A,5477A,5478A,5479A,5480A,5481A,5482A,5483A,5484A,5485A,5486A,5487A,5488A,5489A,5490A,5491A,5492A,5493A,5494A,5495A,5496A,5497A,5498A,5499A,5500A,5501A,5502A,5503A,5504A,5505A,5506A,5507A,5508A,5509A,5510A,5511A,5512A,5513A,5514A,5515A,5516A,5517A,5518A,5519A,5520A,5521A,5522A,5523A,5524A,5525A,5526A,5527A,5528A,5529A,5530A,5531A,5532A,5533A,5534A,5535A,5536A,5537A,5538A,5539A,5540A,5541A,5542A,5543A,5544A,5545A,5546A,5547A,5548A,5549A,5550A,5551A,5552A,5553A,5554A,5555A,5556A,5557A,5558A,5559A,5560A,5561A,5562A,5563A,5564A,5565A,5566A,5567A,5568A,5569A,5570A,5571A,5572A,5573A,5574A,5575A,5576A,5577A,5578A,5579A,5580A,5581A,5582A,5583A,5584A,5585A,5586A,5587A,5588A,5589A,5590A,5591A,5592A,5593A,5594A,5595A,5596A,5597A,5598A,5599A,5600A,5601A,5602A,5603A,5604A,5605A,5606A,5607A,5608A,5609A,5610A,5611A,5612A,5613A,5614A,5615A,5616A,5617A,5618A,5619A,5620A,5621A,5622A,5623A,5624A,5625A,5626A,5627A,5628A,5629A,5630A,5631A,5632A,5633A,5634A,5635A,5636A,5637A,5638A,5639A,5640A,5641A,5642A,5643A,5644A,5645A,5646A,5647A,5648A,5649A,5650A,5651A,5652A,5653A,5654A,5655A,5656A,5657A,5658A,5659A,5660A,5661A,5662A,5663A,5664A,5665A,5666A,5667A,5668A,5669A,5670A,5671A,5672A,5673A,5674A,5675A,5676A,5677A,5678A,5679A,5680A,5681A,5682A,5683A,5684A,5685A,5686A,5687A,5688A,5689A,5690A,5691A,5692A,5693A,5694A,5695A,5696A,5697A,5698A,5699A,5700A,5701A,5702A,5703A,5704A,5705A,5706A,5707A,5708A,5709A,5710A,5711A,5712A,5713A,5714A,5715A,5716A,5717A,5718A,5719A,5720A,5721A,5722A,5723A,5724A,5725A,5726A,5727A,5728A,5729A,5730A,5731A,5732A,5733A,5734A,5735A,5736A,5737A,5738A,5739A,5740A,5741A,5742A,5743A,5744A,5745A,5746A,5747A,5748A,5749A,5750A,5751A,5752A,5753A,5754A,5755A,5756A,5757A,5758A,5759A,5760A,5761A,5762A,5763A,5764A,5765A,5766A,5767A,5768A,5769A,5770A,5771A,5772A,5773A,5774A,5775A,5776A,5777A,5778A,5779A,5780A,5781A,5782A,5783A,5784A,5785A,5786A,5787A,5788A,5789A,5790A,5791A,5792A,5793A,5794A,5795A,5796A,5797A,5798A,5799A,5800A,5801A,5802A,5803A,5804A,5805A,5806A,5807A,5808A,5809A,5810A,5811A,5812A,5813A,5814A,5815A,5816A,5817A,5818A,5819A,5820A,5821A,5822A,5823A,5824A,5825A,5826A,5827A,5828A,5829A,5830A,5831A,5832A,5833A,5834A,5835A,5836A,5837A,5838A,5839A,5840A,5841A,5842A,5843A,5844A,5845A,5846A,5847A,5848A,5849A,5850A,5851A,5852A,5853A,5854A,5855A,5856A,5857A,5858A,5859A,5860A,5861A,5862A,5863A,5864A,5865A,5866A,5867A,5868A,5869A,5870A,5871A,5872A,5873A,5874A,5875A,5876A,5877A,5878A,5879A,5880A,5881A,5882A,5883A,5884A,5885A,5886A,5887A,5888A,5889A,5890A,5891A,5892A,5893A,5894A,5895A,5896A,5897A,5898A,5899A,5900A,5901A,5902A,5903A,5904A,5905A,5906A,5907A,5908A,5909A,5910A,5911A,5912A,5913A,5914A,5915A,5916A,5917A,5918A,5919A,5920A,5921A,5922A,5923A,5924A,5925A,5926A,5927A,5928A,5929A,5930A,5931A,5932A,5933A,5934A,5935A,5936A,5937A,5938A,5939A,5940A,5941A,5942A,5943A,5944A,5945A,5946A,5947A,5948A,5949A,5950A,5951A,5952A,5953A,5954A,5955A,5956A,5957A,5958A,5959A,5960A,5961A,5962A,5963A,5964A,5965A,5966A,5967A,5968A,5969A,5970A,5971A,5972A,5973A,5974A,5975A,5976A,5977A,5978A,5979A,5980A,5981A,5982A,5983A,5984A,5985A,5986A,5987A,5988A,5989A,5990A,5991A,5992A,5993A,5994A,5995A,5996A,5997A,5998A,5999A,6000A,6001A,6002A,6003A,6004A,6005A,6006A,6007A,6008A,6009A,6010A,6011A,6012A,6013A,6014A,6015A,6016A,6017A,6018A,6019A,6020A,6021A,6022A,6023A,6024A,6025A,6026A,6027A,6028A,6029A,6030A,6031A,6032A,6033A,6034A,6035A,6036A,6037A,6038A,6039A,6040A,6041A,6042A,6043A,6044A,6045A,6046A,6047A,6048A,6049A,6050A,6051A,6052A,6053A,6054A,6055A,6056A,6057A,6058A,6059A,6060A,6061A,6062A,6063A,6064A,6065A,6066A,6067A,6068A,6069A,6070A,6071A,6072A,6073A,6074A,6075A,6076A,6077A,6078A,6079A,6080A,6081A,6082A,6083A,6084A,6085A,6086A,6087A,6088A,6089A,6090A,6091A,6092A,6093A,6094A,6095A,6096A,6097A,6098A,6099A,6100A,6101A,6102A,6103A,6104A,6105A,6106A,6107A,6108A,6109A,6110A,6111A,6112A,6113A,6114A,6115A,6116A,6117A,6118A,6119A,6120A,6121A,6122A,6123A,6124A,6125A,6126A,6127A,6128A,6129A,6130A,6131A,6132A,6133A,6134A,6135A,6136A,6137A,6138A,6139A,6140A,6141A,6142A,6143A,6144A,6145A,6146A,6147A,6148A,6149A,6150A,6151A,6152A,6153A,6154A,6155A,6156A,6157A,6158A,6159A,6160A,6161A,6162A,6163A,6164A,6165A,6166A,6167A,6168A,6169A,6170A,6171A,6172A,6173A,6174A,6175A,6176A,6177A,6178A,6179A,6180A,6181A,6182A,6183A,6184A,6185A,6186A,6187A,6188A,6189A,6190A,6191A,6192A,6193A,6194A,6195A,6196A,6197A,6198A,6199A,6200A,6201A,6202A,6203A,6204A,6205A,6206A,6207A,6208A,6209A,6210A,6211A,6212A,6213A,6214A,6215A,6216A,6217A,6218A,6219A,6220A,6221A,6222A,6223A,6224A,6225A,6226A,6227A,6228A,6229A,6230A,6231A,6232A,6233A,6234A,6235A,6236A,6237A,6238A,6239A,6240A,6241A,6242A,6243A,6244A,6245A,6246A,6247A,6248A,6249A,6250A,6251A,6252A,6253A,6254A,6255A,6256A,6257A,6258A,6259A,6260A,6261A,6262A,6263A,6264A,6265A,6266A,6267A,6268A,6269A,6270A,6271A,6272A,6273A,6274A,6275A,6276A,6277A,6278A,6279A,6280A,6281A,6282A,6283A,6284A,6285A,6286A,6287A,6288A,6289A,6290A,6291A,6292A,6293A,6294A,6295A,6296A,6297A,6298A,6299A,6300A,6301A,6302A,6303A,6304A,6305A,6306A,6307A,6308A,6309A,6310A,6311A,6312A,6313A,6314A,6315A,6316A,6317A,6318A,6319A,6320A,6321A,6322A,6323A,6324A,6325A,6326A,6327A,6328A,6329A,6330A,6331A,6332A,6333A,6334A,6335A,6336A,6337A,6338A,6339A,6340A,6341A,6342A,6343A,6344A,6345A,6346A,6347A,6348A,6349A,6350A,6351A,6352A,6353A,6354A,6355A,6356A,6357A,6358A,6359A,6360A,6361A,6362A,6363A,6364A,6365A,6366A,6367A,6368A,6369A,6370A,6371A,6372A,6373A,6374A,6375A,6376A,6377A,6378A,6379A,6380A,6381A,6382A,6383A,6384A,6385A,6386A,6387A,6388A,6389A,6390A,6391A,6392A,6393A,6394A,6395A,6396A,6397A,6398A,6399A,6400A,6401A,6402A,6403A,6404A,6405A,6406A,6407A,6408A,6409A,6410A,6411A,6412A,6413A,6414A,6415A,6416A,6417A,6418A,6419A,6420A,6421A,6422A,6423A,6424A,6425A,6426A,6427A,6428A,6429A,6430A,6431A,6432A,6433A,6434A,6435A,6436A,6437A,6438A,6439A,6440A,6441A,6442A,6443A,6444A,6445A,6446A,6447A,6448A,6449A,6450A,6451A,6452A,6453A,6454A,6455A,6456A,6457A,6458A,6459A,6460A,6461A,6462A,6463A,6464A,6465A,6466A,6467A,6468A,6469A,6470A,6471A,6472A,6473A,6474A,6475A,6476A,6477A,6478A,6479A,6480A,6481A,6482A,6483A,6484A,6485A,6486A,6487A,6488A,6489A,6490A,6491A,6492A,6493A,6494A,6495A,6496A,6497A,6498A,6499A,6500A,6501A,6502A,6503A,6504A,6505A,6506A,6507A,6508A,6509A,6510A,6511A,6512A,6513A,6514A,6515A,6516A,6517A,6518A,6519A,6520A,6521A,6522A,6523A,6524A,6525A,6526A,6527A,6528A,6529A,6530A,6531A,6532A,6533A,6534A,6535A,6536A,6537A,6538A,6539A,6540A,6541A,6542A,6543A,6544A,6545A,6546A,6547A,6548A,6549A,6550A,6551A,6552A,6553A,6554A,6555A,6556A,6557A,6558A,6559A,6560A,6561A,6562A,6563A,6564A,6565A,6566A,6567A,6568A,6569A,6570A,6571A,6572A,6573A,6574A,6575A,6576A,6577A,6578A,6579A,6580A,6581A,6582A,6583A,6584A,6585A,6586A,6587A,6588A,6589A,6590A,6591A,6592A,6593A,6594A,6595A,6596A,6597A,6598A,6599A,6600A,6601A,6602A,6603A,6604A,6605A,6606A,6607A,6608A,6609A,6610A,6611A,6612A,6613A,6614A,6615A,6616A,6617A,6618A,6619A,6620A,6621A,6622A,6623A,6624A,6625A,6626A,6627A,6628A,6629A,6630A,6631A,6632A,6633A,6634A,6635A,6636A,6637A,6638A,6639A,6640A,6641A,6642A,6643A,6644A,6645A,6646A,6647A,6648A,6649A,6650A,6651A,6652A,6653A,6654A,6655A,6656A,6657A,6658A,6659A,6660A,6661A,6662A,6663A,6664A,6665A,6666A,6667A,6668A,6669A,6670A,6671A,6672A,6673A,6674A,6675A,6676A,6677A,6678A,6679A,6680A,6681A,6682A,6683A,6684A,6685A,6686A,6687A,6688A,6689A,6690A,6691A,6692A,6693A,6694A,6695A,6696A,6697A,6698A,6699A,6700A,6701A,6702A,6703A,6704A,6705A,6706A,6707A,6708A,6709A,6710A,6711A,6712A,6713A,6714A,6715A,6716A,6717A,6718A,6719A,6720A,6721A,6722A,6723A,6724A,6725A,6726A,6727A,6728A,6729A,6730A,6731A,6732A,6733A,6734A,6735A,6736A,6737A,6738A,6739A,6740A,6741A,6742A,6743A,6744A,6745A,6746A,6747A,6748A,6749A,6750A,6751A,6752A,6753A,6754A,6755A,6756A,6757A,6758A,6759A,6760A,6761A,6762A,6763A,6764A,6765A,6766A,6767A,6768A,6769A,6770A,6771A,6772A,6773A,6774A,6775A,6776A,6777A,6778A,6779A,6780A,6781A,6782A,6783A,6784A,6785A,6786A,6787A,6788A,6789A,6790A,6791A,6792A,6793A,6794A,6795A,6796A,6797A,6798A,6799A,6800A,6801A,6802A,6803A,6804A,6805A,6806A,6807A,6808A,6809A,6810A,6811A,6812A,6813A,6814A,6815A,6816A,6817A,6818A,6819A,6820A,6821A,6822A,6823A,6824A,6825A,6826A,6827A,6828A,6829A,6830A,6831A,6832A,6833A,6834A,6835A,6836A,6837A,6838A,6839A,6840A,6841A,6842A,6843A,6844A,6845A,6846A,6847A,6848A,6849A,6850A,6851A,6852A,6853A,6854A,6855A,6856A,6857A,6858A,6859A,6860A,6861A,6862A,6863A,6864A,6865A,6866A,6867A,6868A,6869A,6870A,6871A,6872A,6873A,6874A,6875A,6876A,6877A,6878A,6879A,6880A,6881A,6882A,6883A,6884A,6885A,6886A,6887A,6888A,6889A,6890A,6891A,6892A,6893A,6894A,6895A,6896A,6897A,6898A,6899A,6900A,6901A,6902A,6903A,6904A,6905A,6906A,6907A,6908A,6909A,6910A,6911A,6912A,6913A,6914A,6915A,6916A,6917A,6918A,6919A,6920A,6921A,6922A,6923A,6924A,6925A,6926A,6927A,6928A,6929A,6930A,6931A,6932A,6933A,6934A,6935A,6936A,6937A,6938A,6939A,6940A,6941A,6942A,6943A,6944A,6945A,6946A,6947A,6948A,6949A,6950A,6951A,6952A,6953A,6954A,6955A,6956A,6957A,6958A,6959A,6960A,6961A,6962A,6963A,6964A,6965A,6966A,6967A,6968A,6969A,6970A,6971A,6972A,6973A,6974A,6975A,6976A,6977A,6978A,6979A,6980A,6981A,6982A,6983A,6984A,6985A,6986A,6987A,6988A,6989A,6990A,6991A,6992A,6993A,6994A,6995A,6996A,6997A,6998A,6999A,7000A,7001A,7002A,7003A,7004A,7005A,7006A,7007A,7008A,7009A,7010A,7011A,7012A,7013A,7014A,7015A,7016A,7017A,7018A,7019A,7020A,7021A,7022A,7023A,7024A,7025A,7026A,7027A,7028A,7029A,7030A,7031A,7032A,7033A,7034A,7035A,7036A,7037A,7038A,7039A,7040A,7041A,7042A,7043A,7044A,7045A,7046A,7047A,7048A,7049A,7050A,7051A,7052A,7053A,7054A,7055A,7056A,7057A,7058A,7059A,7060A,7061A,7062A,7063A,7064A,7065A,7066A,7067A,7068A,7069A,7070A,7071A,7072A,7073A,7074A,7075A,7076A,7077A,7078A,7079A,7080A,7081A,7082A,7083A,7084A,7085A,7086A,7087A,7088A,7089A,7090A,7091A,7092A,7093A,7094A,7095A,7096A,7097A,7098A,7099A,7100A,7101A,7102A,7103A,7104A,7105A,7106A,7107A,7108A,7109A,7110A,7111A,7112A,7113A,7114A,7115A,7116A,7117A,7118A,7119A,7120A,7121A,7122A,7123A,7124A,7125A,7126A,7127A,7128A,7129A,7130A,7131A,7132A,7133A,7134A,7135A,7136A,7137A,7138A,7139A,7140A,7141A,7142A,7143A,7144A,7145A,7146A,7147A,7148A,7149A,7150A,7151A,7152A,7153A,7154A,7155A,7156A,7157A,7158A,7159A,7160A,7161A,7162A,7163A,7164A,7165A,7166A,7167A,7168A,7169A,7170A,7171A,7172A,7173A,7174A,7175A,7176A,7177A,7178A,7179A,7180A,7181A,7182A,7183A,7184A,7185A,7186A,7187A,7188A,7189A,7190A,7191A,7192A,7193A,7194A,7195A,7196A,7197A,7198A,7199A,7200A,7201A,7202A,7203A,7204A,7205A,7206A,7207A,7208A,7209A,7210A,7211A,7212A,7213A,7214A,7215A,7216A,7217A,7218A,7219A,7220A,7221A,7222A,7223A,7224A,7225A,7226A,7227A,7228A,7229A,7230A,7231A,7232A,7233A,7234A,7235A,7236A,7237A,7238A,7239A,7240A,7241A,7242A,7243A,7244A,7245A,7246A,7247A,7248A,7249A,7250A,7251A,7252A,7253A,7254A,7255A,7256A,7257A,7258A,7259A,7260A,7261A,7262A,7263A,7264A,7265A,7266A,7267A,7268A,7269A,7270A,7271A,7272A,7273A,7274A,7275A,7276A,7277A,7278A,7279A,7280A,7281A,7282A,7283A,7284A,7285A,7286A,7287A,7288A,7289A,7290A,7291A,7292A,7293A,7294A,7295A,7296A,7297A,7298A,7299A,7300A,7301A,7302A,7303A,7304A,7305A,7306A,7307A,7308A,7309A,7310A,7311A,7312A,7313A,7314A,7315A,7316A,7317A,7318A,7319A,7320A,7321A,7322A,7323A,7324A,7325A,7326A,7327A,7328A,7329A,7330A,7331A,7332A,7333A,7334A,7335A,7336A,7337A,7338A,7339A,7340A,7341A,7342A,7343A,7344A,7345A,7346A,7347A,7348A,7349A,7350A,7351A,7352A,7353A,7354A,7355A,7356A,7357A,7358A,7359A,7360A,7361A,7362A,7363A,7364A,7365A,7366A,7367A,7368A,7369A,7370A,7371A,7372A,7373A,7374A,7375A,7376A,7377A,7378A,7379A,7380A,7381A,7382A,7383A,7384A,7385A,7386A,7387A,7388A,7389A,7390A,7391A,7392A,7393A,7394A,7395A,7396A,7397A,7398A,7399A,7400A,7401A,7402A,7403A,7404A,7405A,7406A,7407A,7408A,7409A,7410A,7411A,7412A,7413A,7414A,7415A,7416A,7417A,7418A,7419A,7420A,7421A,7422A,7423A,7424A,7425A,7426A,7427A,7428A,7429A,7430A,7431A,7432A,7433A,7434A,7435A,7436A,7437A,7438A,7439A,7440A,7441A,7442A,7443A,7444A,7445A,7446A,7447A,7448A,7449A,7450A,7451A,7452A,7453A,7454A,7455A,7456A,7457A,7458A,7459A,7460A,7461A,7462A,7463A,7464A,7465A,7466A,7467A,7468A,7469A,7470A,7471A,7472A,7473A,7474A,7475A,7476A,7477A,7478A,7479A,7480A,7481A,7482A,7483A,7484A,7485A,7486A,7487A,7488A,7489A,7490A,7491A,7492A,7493A,7494A,7495A,7496A,7497A,7498A,7499A,7500A,7501A,7502A,7503A,7504A,7505A,7506A,7507A,7508A,7509A,7510A,7511A,7512A,7513A,7514A,7515A,7516A,7517A,7518A,7519A,7520A,7521A,7522A,7523A,7524A,7525A,7526A,7527A,7528A,7529A,7530A,7531A,7532A,7533A,7534A,7535A,7536A,7537A,7538A,7539A,7540A,7541A,7542A,7543A,7544A,7545A,7546A,7547A,7548A,7549A,7550A,7551A,7552A,7553A,7554A,7555A,7556A,7557A,7558A,7559A,7560A,7561A,7562A,7563A,7564A,7565A,7566A,7567A,7568A,7569A,7570A,7571A,7572A,7573A,7574A,7575A,7576A,7577A,7578A,7579A,7580A,7581A,7582A,7583A,7584A,7585A,7586A,7587A,7588A,7589A,7590A,7591A,7592A,7593A,7594A,7595A,7596A,7597A,7598A,7599A,7600A,7601A,7602A,7603A,7604A,7605A,7606A,7607A,7608A,7609A,7610A,7611A,7612A,7613A,7614A,7615A,7616A,7617A,7618A,7619A,7620A,7621A,7622A,7623A,7624A,7625A,7626A,7627A,7628A,7629A,7630A,7631A,7632A,7633A,7634A,7635A,7636A,7637A,7638A,7639A,7640A,7641A,7642A,7643A,7644A,7645A,7646A,7647A,7648A,7649A,7650A,7651A,7652A,7653A,7654A,7655A,7656A,7657A,7658A,7659A,7660A,7661A,7662A,7663A,7664A,7665A,7666A,7667A,7668A,7669A,7670A,7671A,7672A,7673A,7674A,7675A,7676A,7677A,7678A,7679A,7680A,7681A,7682A,7683A,7684A,7685A,7686A,7687A,7688A,7689A,7690A,7691A,7692A,7693A,7694A,7695A,7696A,7697A,7698A,7699A,7700A,7701A,7702A,7703A,7704A,7705A,7706A,7707A,7708A,7709A,7710A,7711A,7712A,7713A,7714A,7715A,7716A,7717A,7718A,7719A,7720A,7721A,7722A,7723A,7724A,7725A,7726A,7727A,7728A,7729A,7730A,7731A,7732A,7733A,7734A,7735A,7736A,7737A,7738A,7739A,7740A,7741A,7742A,7743A,7744A,7745A,7746A,7747A,7748A,7749A,7750A,7751A,7752A,7753A,7754A,7755A,7756A,7757A,7758A,7759A,7760A,7761A,7762A,7763A,7764A,7765A,7766A,7767A,7768A,7769A,7770A,7771A,7772A,7773A,7774A,7775A,7776A,7777A,7778A,7779A,7780A,7781A,7782A,7783A,7784A,7785A,7786A,7787A,7788A,7789A,7790A,7791A,7792A,7793A,7794A,7795A,7796A,7797A,7798A,7799A,7800A,7801A,7802A,7803A,7804A,7805A,7806A,7807A,7808A,7809A,7810A,7811A,7812A,7813A,7814A,7815A,7816A,7817A,7818A,7819A,7820A,7821A,7822A,7823A,7824A,7825A,7826A,7827A,7828A,7829A,7830A,7831A,7832A,7833A,7834A,7835A,7836A,7837A,7838A,7839A,7840A,7841A,7842A,7843A,7844A,7845A,7846A,7847A,7848A,7849A,7850A,7851A,7852A,7853A,7854A,7855A,7856A,7857A,7858A,7859A,7860A,7861A,7862A,7863A,7864A,7865A,7866A,7867A,7868A,7869A,7870A,7871A,7872A,7873A,7874A,7875A,7876A,7877A,7878A,7879A,7880A,7881A,7882A,7883A,7884A,7885A,7886A,7887A,7888A,7889A,7890A,7891A,7892A,7893A,7894A,7895A,7896A,7897A,7898A,7899A,7900A,7901A,7902A,7903A,7904A,7905A,7906A,7907A,7908A,7909A,7910A,7911A,7912A,7913A,7914A,7915A,7916A,7917A,7918A,7919A,7920A,7921A,7922A,7923A,7924A,7925A,7926A,7927A,7928A,7929A,7930A,7931A,7932A,7933A,7934A,7935A,7936A,7937A,7938A,7939A,7940A,7941A,7942A,7943A,7944A,7945A,7946A,7947A,7948A,7949A,7950A,7951A,7952A,7953A,7954A,7955A,7956A,7957A,7958A,7959A,7960A,7961A,7962A,7963A,7964A,7965A,7966A,7967A,7968A,7969A,7970A,7971A,7972A,7973A,7974A,7975A,7976A,7977A,7978A,7979A,7980A,7981A,7982A,7983A,7984A,7985A,7986A,7987A,7988A,7989A,7990A,7991A,7992A,7993A,7994A,7995A,7996A,7997A,7998A,7999A,8000A,8001A,8002A,8003A,8004A,8005A,8006A,8007A,8008A,8009A,8010A,8011A,8012A,

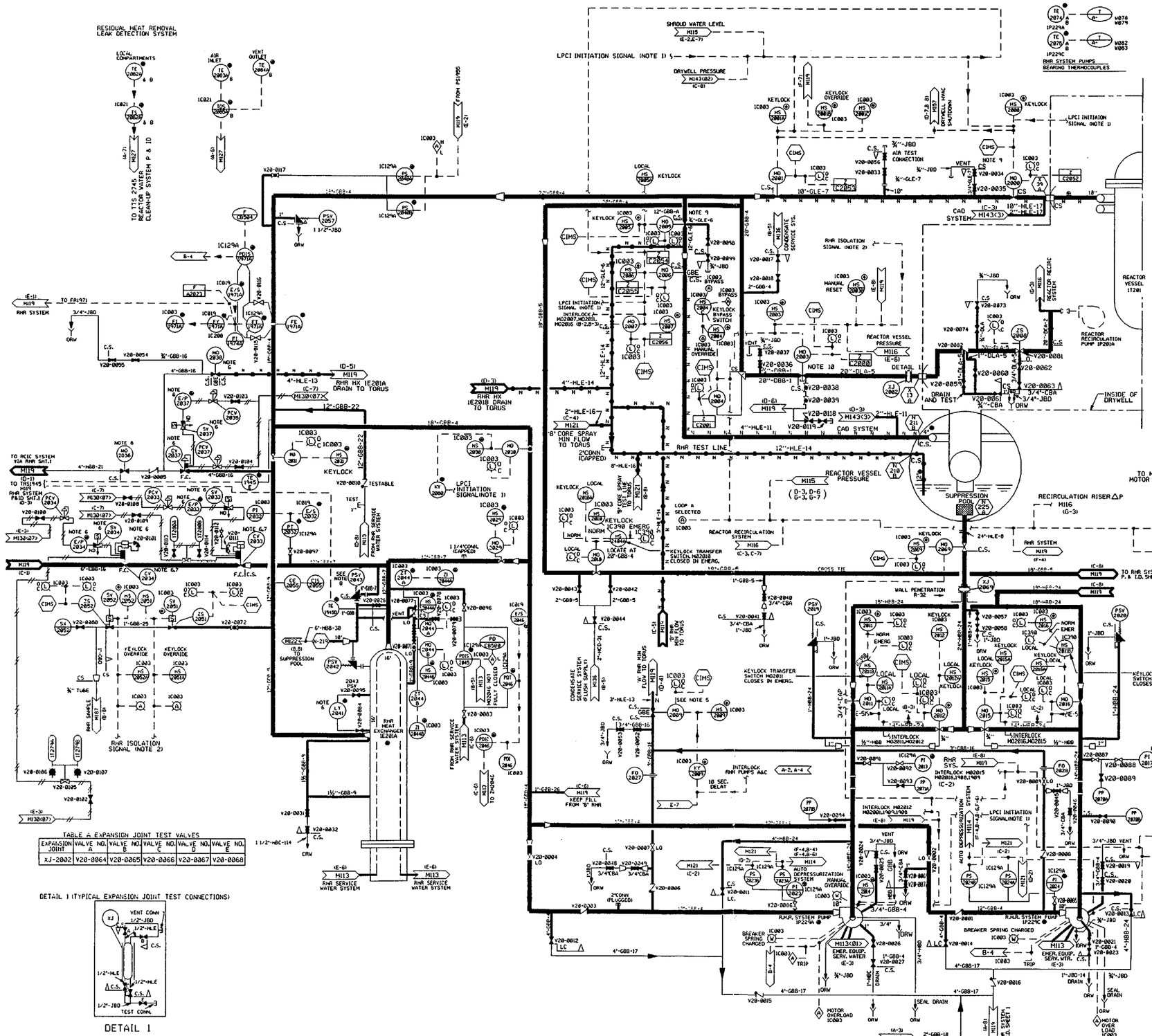

BECH-M120 REV. 57

NOTES:

1. LPCI-INITIATION SIGNAL DRYWELL HIGH PRESSURE FROM PS 4310A,4310B,4312A,4312B,M143(E-7) AND /OR REACTOR LOW WATER LEVEL FROM LIS4531,4532,4533,4534,M115(F-2,F-7). SIGNAL MAY BE RESET WITH PUSHBUTTON HS2061 LOCATED ON PANEL 1C003
2. RHR SDC ISOLATION SIGNAL-DRYWELL HIGH PRESSURE FROM PS4315A,B,C,D,M143(E-7)AND /OR REACTOR LOW WATER LEVEL FROM LIS 4592A, 4592B, 4592C, 4592D, M115(E-3,E-6)
3. RHR SELECTION SIGNAL-RECEIVED FROM SAME SENSING DEVICES THAT SEND LPCI INITIATION SIGNALSNOTE 1).HOWEVER REACTOR LOW WATER LEVEL SET POINTS ARE DIFFERENT.
4. FOR RHR SYSTEM LOGIC,SEE G.E R.H.R. FUNCTIONAL CONTROL DIAGRAM 729E630CA
5. THIS VALVE WILL NOT AUTOMATICALLY OPEN(CLOSE) UNLESS IT HAS BEEN CLOSED(OPEN) FOR A NOMINAL TWO SECONDS. THIS IS TO PREVENT CHALLENGING THE ELECTRICAL AND MECHANICAL INTERLOCKS ASSOCIATED WITH THE MOTOR CONTACTORS.
6. ALL CONTROLS AND INDICATIONS FOR STEAM CONDENSING HAVE BEEN REMOVED FROM CONTROL ROOM PANELS. LOCAL COMPONENTS ARE ABANDONED IN PLACE. WIRING FROM EACH MOTOR TO ITS RESPECTIVE MCC IS IN PLACE. ALL OTHER WIRING HAS BEEN DELETED IN PLACE.
7. LOCKING COLLARS HAVE BEEN INSTALLED ON CV2033 AND CV2034 TO PREVENT OPENING OF VALVES. THE INSTRUMENT AIR SUPPLY LINES TO THE VALVES HAVE BEEN DISCONNECTED AND PLUGGED, REF. EMA A08108-G.
8. PSV2043 IS GAGGED AND ABANDONED IN PLACE.
9. MO-2000 AND MO-2005 HAVE A 1/8" DIAMETER HOLE DRILLED IN THE OUTBOARD DISC FACE TO PREVENT POTENTIAL PRESSURE LOCKING.
10. MO-2003 HAS A 1/8" DIAMETER HOLE DRILLED ON THE INBOARD DISC FACE TO PREVENT POTENTIAL PRESSURE LOCKING.

DUANE ARNOLD ENERGY CENTER
IES UTILITIES
UPDATED FINAL SAFETY ANALYSIS REPORT

P & ID
RESIDUAL HEAT REMOVAL SYSTEM

FIGURE 5.4-14 SH. 2

REVISION 15 - 5/00

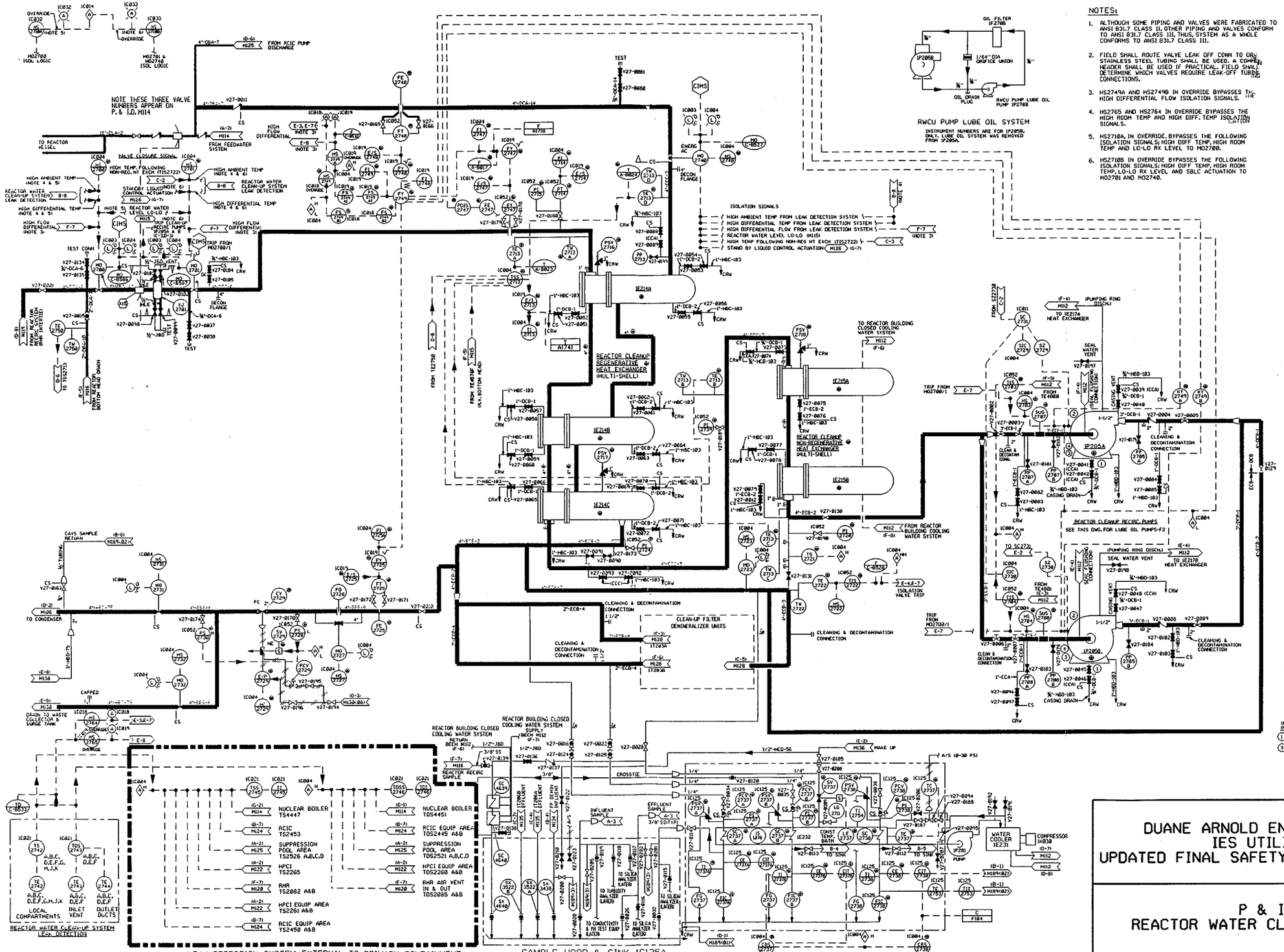

NOTES:

1. ALTHOUGH SOME PIPING AND VALVES WERE FABRICATED TO ANSI B31.7 CLASS II, OTHER PIPING AND VALVES CONFORM TO ANSI B31.7 CLASS III, THUS, SYSTEM AS A WHOLE CONFORMS TO ANSI B31.7 CLASS III.
2. FIELD SHALL ROUTE VALVE LEAK OFF CONN TO ORIG STAINLESS STEEL TUBING SHALL BE USED. A COMMON HEADER SHALL BE USED IF PRACTICAL. FIELD SHALL DETERMINE WHICH VALVES REQUIRE LEAK-OFF TUBING CONNECTIONS.
3. HS2749A AND HS2749B IN OVERRIDE BYPASSES THE HIGH DIFFERENTIAL FLOW ISOLATION SIGNALS.
4. HS2765 AND HS2764 IN OVERRIDE BYPASSES THE HIGH ROOM TEMP AND HIGH DIFF. TEMP ISOLATION SIGNALS.
5. HS2710A, IN OVERRIDE, BYPASSES THE FOLLOWING ISOLATION SIGNALS; HIGH DIFF TEMP, HIGH ROOM TEMP AND LO-LO RX LEVEL TO MO2700.
6. HS2710B IN OVERRIDE BYPASSES THE FOLLOWING ISOLATION SIGNALS; HIGH DIFF TEMP, HIGH ROOM TEMP, LO-LO RX LEVEL AND SBLC ACTUATION TO MO2701 AND MO2740.

1P205A & B COOLING WATER CONNECTIONS (REF. BECH-M112, F-8)
①, ② STUFFING BOX JACKET
③, ④ BEARING COOLING CARTRIDGE

DUANE ARNOLD ENERGY CENTER
IES UTILITIES
UPDATED FINAL SAFETY ANALYSIS REPORT

P & ID
REACTOR WATER CLEANUP SYSTEM

FIGURE 5.4-16 SH. 1

BECH-M127 REV. 62

REVISION 15 - 5/00

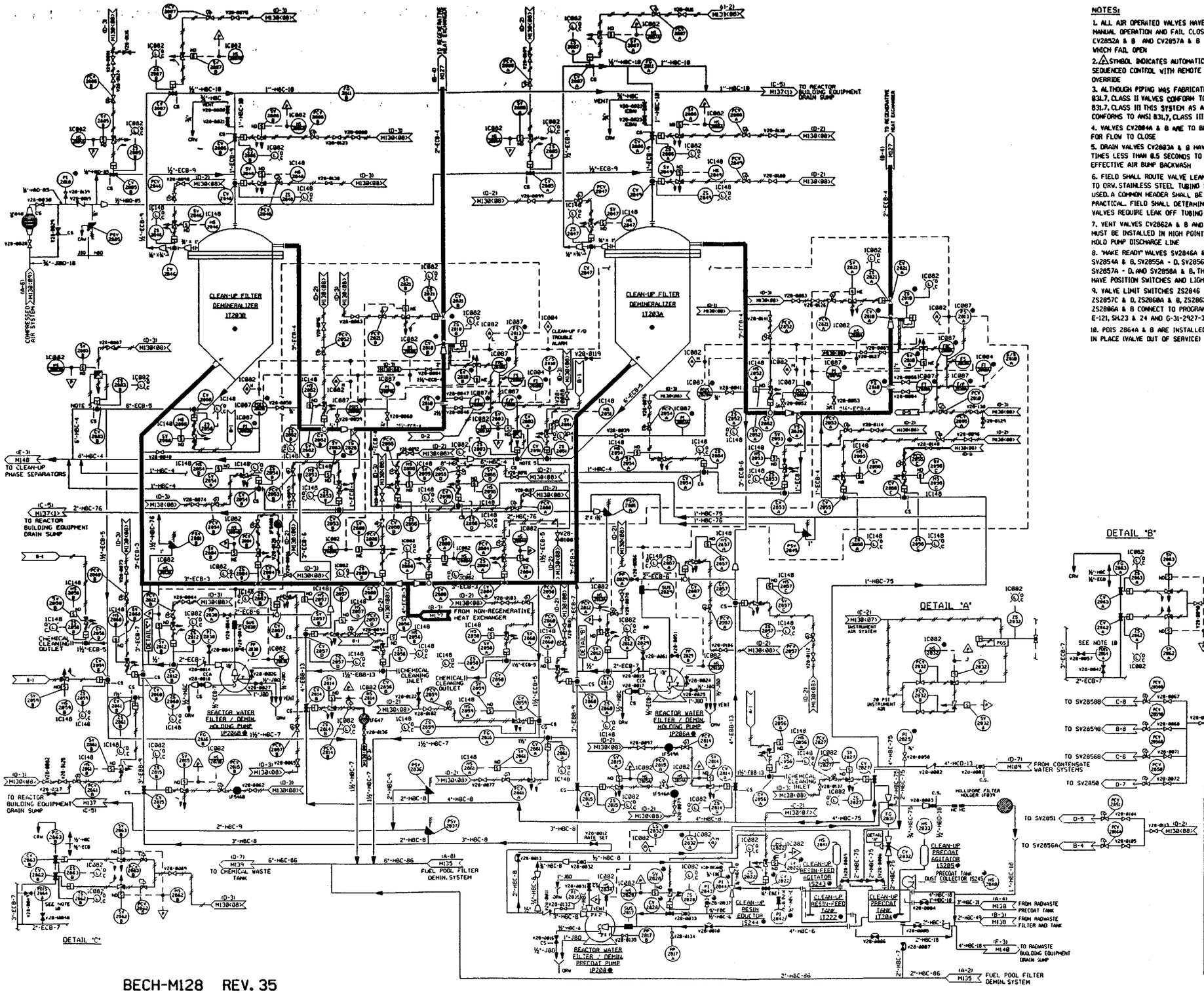

BECH-M128 REV. 35

NOTES:

1. ALL AIR OPERATED VALVES HAVE MEANS OF MANUAL OPERATION AND FAIL CLOSED, EXCEPT CV2852A & B AND CV2857A & B WHICH FAIL OPEN
2. △ SYMBOL INDICATES AUTOMATICALLY SEQUENCED CONTROL WITH REMOTE MANUAL OVERRIDE
3. ALTHOUGH PIPING WAS FABRICATED TO ANSI B31.7, CLASS II VALVES CONFORM TO ANSI B31.7, CLASS III THIS SYSTEM AS A WHOLE CONFORMS TO ANSI B31.7, CLASS III
4. VALVES CV2864A & B ARE TO BE INSTALLED FOR FLOW TO CLOSE
5. DRAIN VALVES CV2863A & B HAVE OPENING TIMES LESS THAN 0.5 SECONDS TO PROVIDE AN EFFECTIVE AIR BUMP BACKWASH
6. FIELD SHALL ROUTE VALVE LEAK OFF CONN. TO DRN. STAINLESS STEEL TUBING SHALL BE USED. A COMMON HEADER SHALL BE USED IF PRACTICAL. FIELD SHALL DETERMINE WHICH VALVES REQUIRE LEAK OFF TUBING CONNECTIONS
7. VENT VALVES CV2862A & B AND CV2863A & B MUST BE INSTALLED IN HIGH POINT OF HOLD PUMP DISCHARGE LINE
8. "MAKE READY" VALVES SV2846A & B THRU SV2854A & B, SV2855A - D, SV2856A & B, SV2857A - D, AND SV2858A & B, THRU 2863A & B HAVE POSITION SWITCHES AND LIGHTS
9. VALVE LIMIT SWITCHES ZS2846 THRU ZS2851, ZS2857C & D, ZS2858A & B, ZS2862A & B, AND ZS2863A & B CONNECT TO PROGRAMMERS, REF: E-121, SH.23 & 24 AND G-31-2927-33 (1, 2, & 3)
10. POIS 2864A & B ARE INSTALLED BUT DELETED IN PLACE (VALVE OUT OF SERVICE)

DUANE ARNOLD ENERGY CENTER
IES UTILITIES
UPDATED FINAL SAFETY ANALYSIS REPORT

P & ID
REACTOR WATER FILTER DEMINERALIZER

FIGURE 5.4-16 SH. 2

REVISION 15 - 5/00

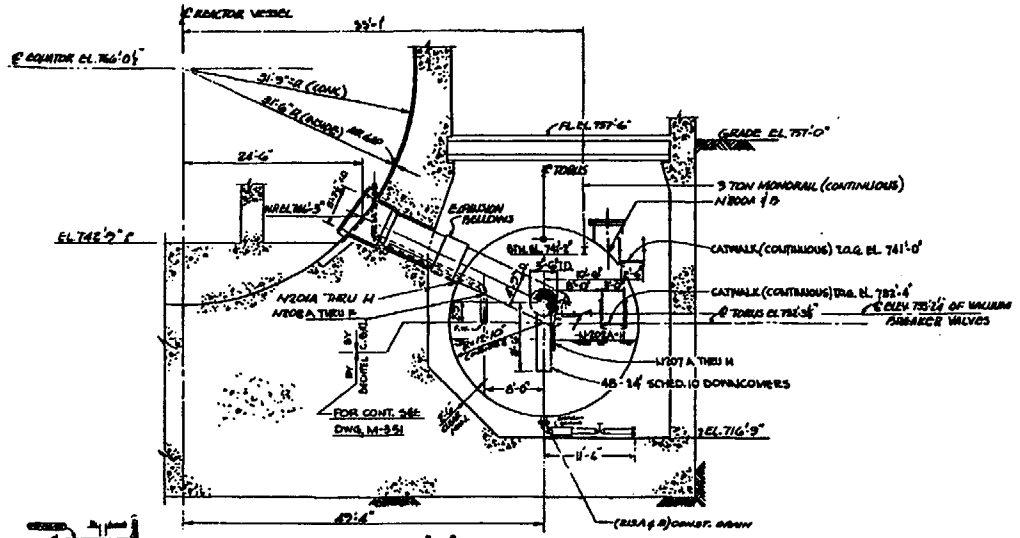

SECTION A-A

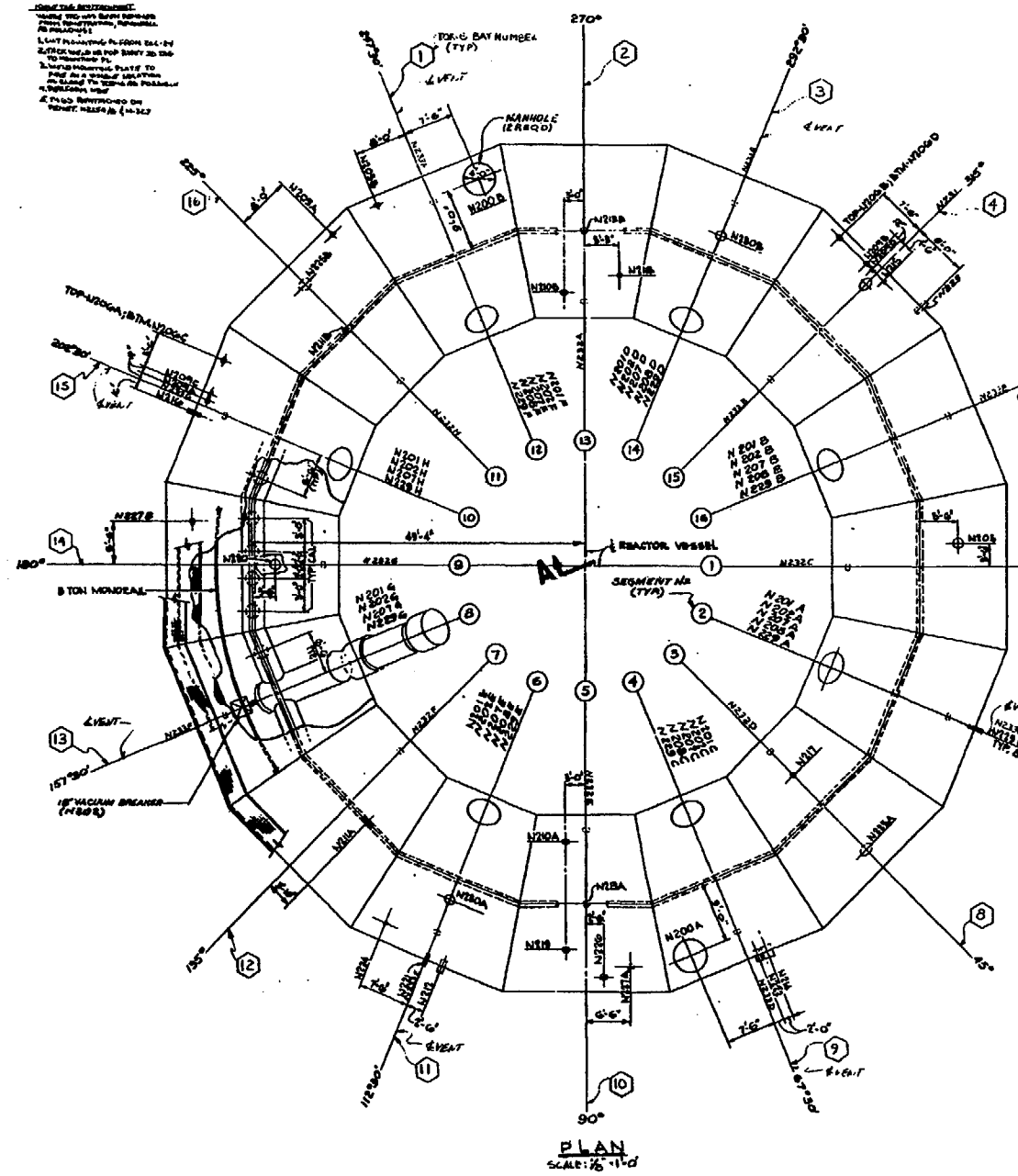

PLAN

PENET. NO.	NO REQD	NOM DIA.	DIA. FT. INSIDE SLEEVE	TYPE	DESIGN WELD STRESS	SCHED	SEGMENT	CONTROL	FORCES LBS. F_x	F_y	F_z	MOMENTS FT. LBS. M_x	M_y	M_z	LINE SIZE	SERVICE	REMARKS	WELD END PREP
N200	2	48"I.D.		—	—	—	8 ea.	B-B								ACCESS HATCH		
N201	8	8"I.D.		—	—	—	1,2,3,4,5,6,7,8	—							8"	VENT LINE	SEE DWG. M-351	
N202	8	18"	1.50	—	—	80	1,2,3,4,5,6,7,8	—							18"	VACUUM BREAKER		
N203	2	1"		8	—	80	1	C-C							1"	OXYGEN ANALYZER	A. SAMPLE INLET B. SAMPLE RETURN	SEE NOTE 6
N204	1	18"	1.930	8	—	80	1								18"	TORUS MAIN OUTLET		SEE DETAIL
N206	4	1"		5	—	80	2	B-B							1"	LIQUID LEVEL INDICATOR		SEE NOTE 6
N207	8	1"		6	—	80	2								1"	VENT LINE DRAIN		SEE NOTE 6
N208	6	10"	10.07	—	—	80	1,2,3,4,5,6,7,8								10"	RCIC TURBINE EXHAUST, HPCI TURBINE EXHAUST, MAIN STM. HEADER		SEE DETAIL
N209	4	1"		6	—	80	2	B-B							1"	A-AIRE/B-AIR; C-D-WATER		SEE NOTE 6
N210	2	12"		5	—		8	C-C	800	500	800	2000	2200	2000	12"	RHR RECIRC		SEE DETAIL
N211	2	4"	3.81	5	—	120	7		300	700	300	1500	1000	1500	4"	RHR SPRAY	AS SHOWN OTHERWISE SAME AS TYPE B	SEE DETAIL
N212	1	8"	7.71	5	.438	—	6		500	800	500	2000	2100	2000	8"	RCIC EXHAUST	DO	SEE DETAIL
N213	2	6"		6	—	80	3	B-B							6"	DRYWELL DRAIN; PUMP LEVEL (B)		
N214	1	20"	19.25	5	.218	—	4	D-D	1000	1000	1000	3500	6,000	3500	20"	HPCI TURBINE EXHAUST	AS SHOWN OTHERWISE SAME AS TYPE B	SEE DETAIL
N215	1	1"		5	—	80	15	B-B							1"	ATMOSPHERIC PRESSURE INSTRUMENTATION		SEE NOTE 6
N216	1	4"		6	—	80	10								—	SPARE		SEE DETAIL
N217	1	2"		6	—	80	3	D-D							—	PSV-2108		SEE NOTE 6
N218	1	8"		6	—	80	18								—	PRESSURE TO CORE SPRAY PUMP SUCTION LINE FROM RHR. H.P.C.I. SUCTION, D.W.R. RELIEF.		SEE NOTE 6
N219	1	10"		6	—	80	5								6"	D.W.R. SPRAY		SEE DETAIL
N220	1	18"		8	—	80	9								18"	PURGE IN-OUT	AS SHOWN OTHERWISE SAME AS TYPE B	SEE DETAIL
N221	1	2"		6	—	80	6	C-C							2"	SPARE		SEE NOTE 6
N222	1	8"		8	—	80	4	D-D							2"	CONDENSATE FROM HPCI TURB. DRAIN POT.		SEE NOTE 6
N223	1	8"	7.71	5	—	100	15	B-B							8"	RHR RELIEF, H.P.C.I. RELIEF.		SEE DETAIL
N224	1	6"		8	—		6	C-C							6"	RCIC SUCTION	SEE NOTE 3	
N225	2	24"		8	—		11	D-D							24"	RHR SUCTION	SEE NOTE 7	
N226	1	14"		8	—		5		SEE INDIVIDUAL PENETRATION ANALYSIS FOR FORCES & MOMENTS.						14"	HPCI SUCTION	SEE NOTE 3	
N227	2	12"		8	—		8	C-C							12"	CORE SPRAY	SEE NOTE 7	
N228	8	1"		5	—	80	1,2,3,4,5,6,7,8	B-B							1"	[illegible]	VENTS, DRAINS, & P.G.I.	SEE NOTE 6
N230	2	18"	FLOE	7	—	80	14								—	VACUUM BREAKER, ELECTRICAL CABLES		SEE DETAIL
N231	1	20"		8	—	80	15								20"	VACUUM BREAKER		SEE DETAIL
N232	8	1"		*	*	*	1,2,3,4,5,6,7,8								—	SPTMS THERMOWELLS	* FOR INSTALLATION DETAILS SEE DWG. 7884-C3-230	*
N233	8	1"		*	*	*	1,2,3,4,5,6,7,8								—	SPTMS THERMOWELLS	* FOR INSTALLATION DETAILS SEE DWG. 7884-C3-230	*

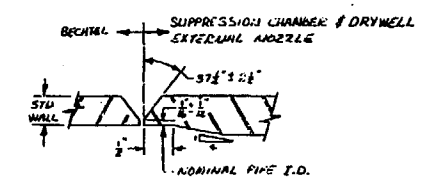

EXTERNAL NOZZLE WELD END PREP DETAIL.

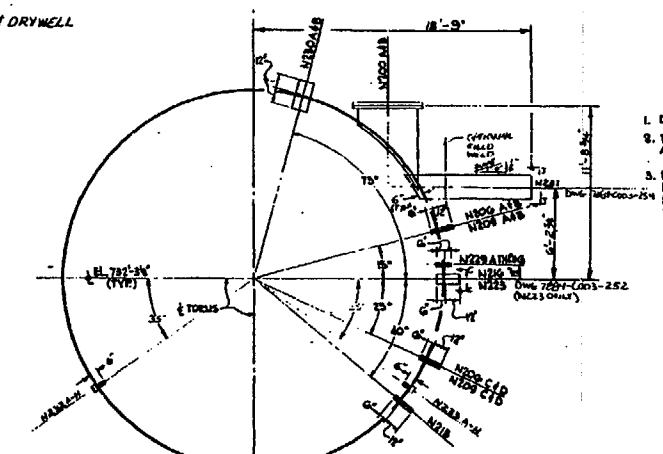

SECTION B-B

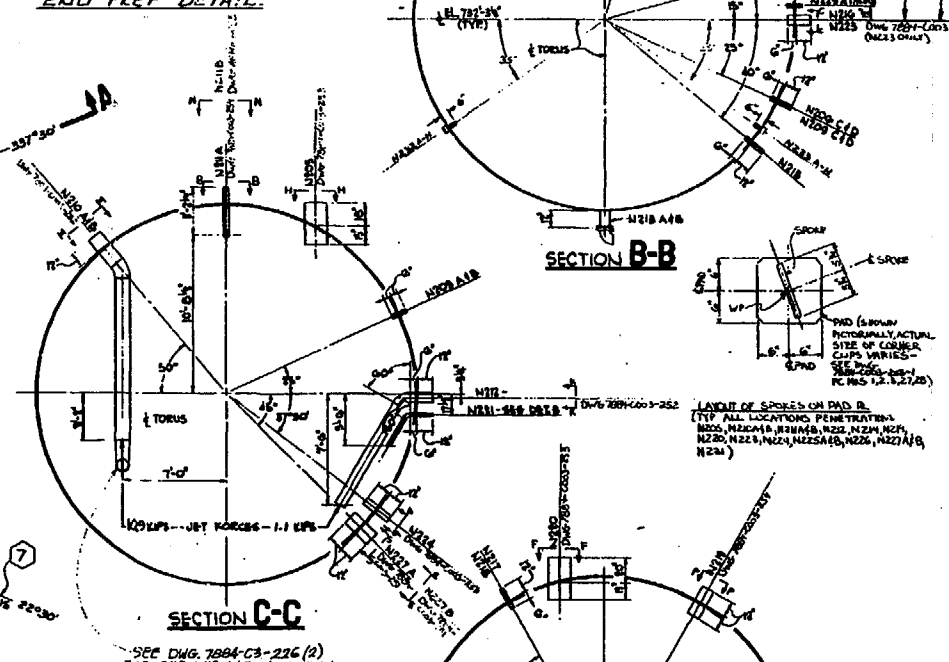

SECTION C-C

SEE DWG. 7884-C3-226 (2) FOR RHR LINE ELBOW ADDITIONS

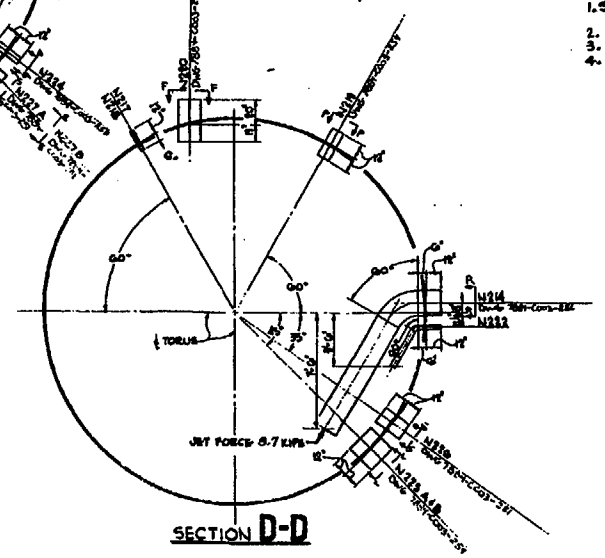

SECTION D-D

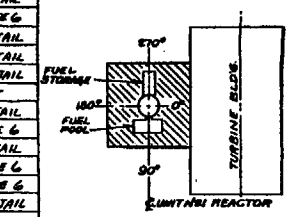

KEY PLAN

GENERAL NOTE

THIS DWG. TO BE USED FOR REFERENCE ONLY. C.B. & I. DRAWINGS MUST BE USED FOR ALL DIMENSIONS.

NOTES

1. DELETED NOTE ONE
2. TOP OF GRATING EL. ON PLATFORMS FOR MANHOLE ACCESS TO BE SET BY C.B.&I.
3. PENETRATIONS N224 AND N228 SHALL HAVE REMOVABLE STRAINERS ATTACHED WITHIN THE TORUS. EACH STRAINER SHALL BE MADE OF STAINLESS STL. & SHALL BE SUPPLIED ON THE FOLLOWING DESIGN BASIS:
   A. MATERIALS SHALL CONFORM TO SPEC. 7884-G-8 DESIGN CONDITIONS.
   B. EACH NOZZLE STRAINER SHALL PASS THE RESPECTIVE FLOW RATE SHOWN BELOW, WITH A MAX ENTRANCE HEAD LOSS ACROSS THE SCREEN & INTO THE INDIVIDUAL NOZZLE OF ONE FOOT OF WATER WHEN STRAINER IS 50 PER CENT CLOGGED.

PENET. NO	NO OF STRAINERS	PIPE SIZE	FLOW (gpm)
N224	1	6"	400
N228	1	14"	2000

   C. STRAINERS MAY BE OF CONICAL OR CYLINDRICAL SHAPE & SIZED TO SCREEN OUT ALL PARTICLES GREATER THAN ¼" DIA.
   D. BOTTOM OF EACH STRAINER SHALL BE AT LEAST ONE FOOT INTO THE TORUS.
4. SEE NOZZLE LOAD SKETCH ON DWG. SK-M-52
5. CHANGED DRAWING NO. FROM L-148 TO SK-M-53
6. NOZZLES 2" AND UNDER TO BE CUT SQUARE FOR SOCKET WELD (BRANCH SUBRS).
7. SUCTION STRAINERS AT PENETRATIONS N225A/B AND N227A/B DESIGNED AND FABRICATED IN ACCORDANCE WITH SPEC. BECH-HRS-H47L

REFERENCE DWG.'s

1. SK-M-80 CONTAINMENT VESSEL REINFTD.-DRYWELL PLANS & SECTIONS.
2. M-41 CONT. VESSEL REINFTD.-DRYWELL PENETRATIONS.
3. M-42 CONT. VESSEL REINFTD.-PENETRATION DETAILS.
4. M-551 MODIF. TO ELECTROMATIC RELIEF VALVE DISCHARGE LINES IN TORUS.

DUANE ARNOLD ENERGY CENTER
IES UTILITIES
UPDATED FINAL SAFETY ANALYSIS REPORT

SUPPRESSION POOL PENETRATION

FIGURE 6.2-3

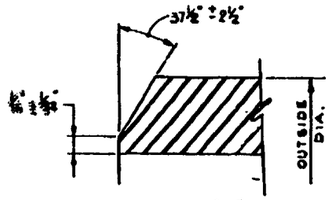

DET. "A"
WELD END PREP.

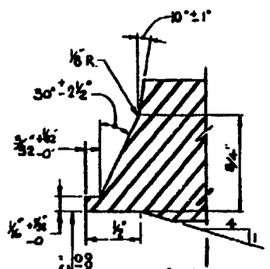

DET. "B"
WELD END PREP.

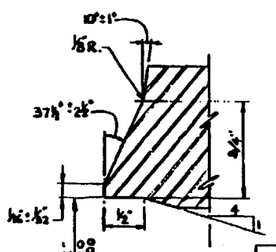

DET. "E"
WELD END PREP.

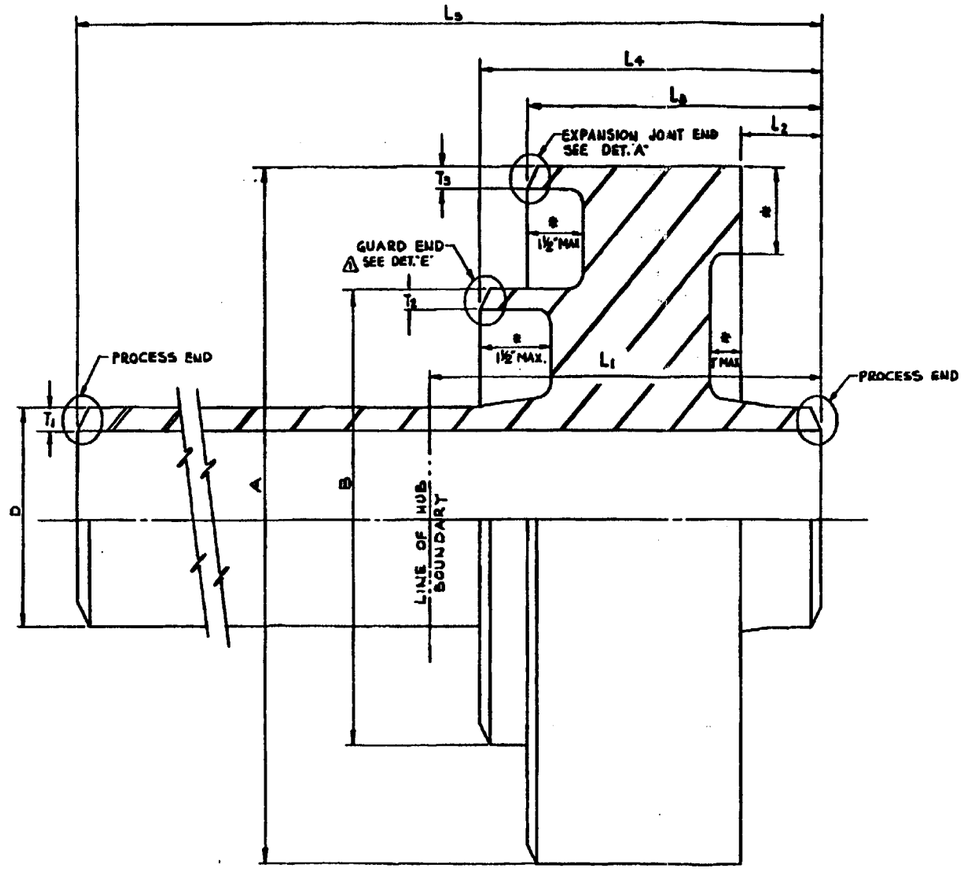

FLUED HEAD - CLASS I

SUBJECT TO INSERVICE INSPECTION ASME CODE SECT. XI

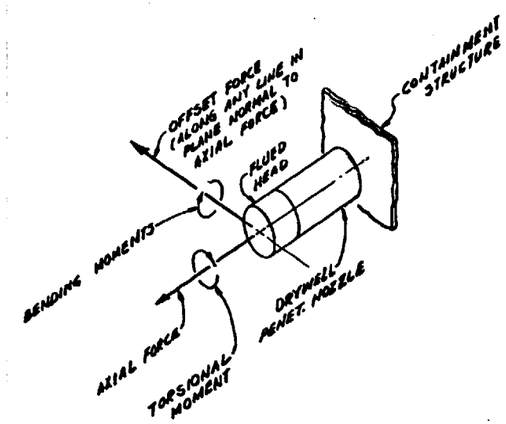

NOTE:
1. DIMENSIONS MARKED THUS * TO BE DETERMINED BY MANUFACTURER.
2. MANUFACTURER SHALL SHOW WEIGHT OF FINISHED ITEMS ON HIS SHOP DRAWINGS.

PENET. NO.	SERVICE	QTY	FLUED HEAD: NOM. SIZE SLVE × GUARD × PIPE	MATERIAL	CODE ASME SECT. II	O.D. "A"	O.D. "B"	O.D. "D"	L_1	L_2	L_3	L_4	L_5	NOM. WALL THK. T_1	T_2	T_3	PROCESS PIPE: DESIGN PRESS PSIG	HYDRO TEST	DESIGN TEMP °F	AXIAL FORCE LBS.	BENDING MOMENT FT. LBS.	OFFSET FORCE LBS	TORSIONAL MOMENT FT. LBS	PIPE CLASS	PROC. END: WELD DET.	"C" DIM.	GUARD END: WELD DET.	"C" DIM.	CHARPY IMPACT TEMP. °F
X-9A&B	FEEDWATER	2	36"×26"×16"	SA-105-GR.II	CLASS I	36"	26"	16"	16"	5"	14"	15½"	13'-1"	.844	1.000	.375	1295	NOT BY FLUED HEAD MANUFACTURER	573	313,000	1,023,000	313,000	1,023,000	DLA-2	B	14.962	E	14.209	-20°
X-10	STEAM TO RCIC TURBINE	1	18"×12"×4"			18"	12.75	4.5	13"	4"	10"	11½"	14'-5"	.337	.406		1240			24,000	31,000	24,000	31,000	DBA-4	A	–		11.998	0°
X-11	STEAM TO HPCI TURBINE	1	28"×20"×10"			28"	20"	10.75	13"		10"	11½"	15'-5"	.594	.812		1240			134,000	323,000	134,000	323,000	DLA-3	B	9.669		18.336	0°
X-12	RHR & SHUT DOWN SUPPLY (SUCT)	1	36"×28"×18"			36"	28"	18"	16"		13"	14½"	13'-8"	.938	1.000		1265			388,000	1,441,000	388,000	1,441,000	DLA-4		16.317		26.209	0°
X-13A	RHR & SHUT DOWN RETURN (DISCH.)	1	36"×28"×20"			36"	28"	20"	16"	1½"	13"	14½"	14'-1	1.031	1.000		1438			545,000	1,935,000	545,000	1,935,000	DLA-6		18.155		26.209	0°
X-13B		1	36"×28"×20"							1½"					1.000					545,000	1,935,000	545,000	1,935,000	DLA-5		18.155		26.209	0°
X-15	R.W. CLEAN-UP SUPPLY	1	20"×12"×4"	SA-182-F316		20"	12.75	4.5	13"	4"	10"	11½"	16'-2"	.337	.406		1261			22,000	36,000	22,000	36,000	DCA-6	A	–		11.998	—
X-16A&B	CORE SPRAY PUMP DISCH.	2	26"×18"×8"	SA-105-GR.II		26"	18"	8.625	13"		10"	11½"	15'-3½"	.500	.750		1240			85,000	174,000	85,000	174,000	A-DLA-7 B-DLA-8	B	7.709		16.646	0°
X-17	RPV HEAD SPRAY	1	20"×12"×4"			20"	12.75	4.5	13"		10"	11½"	13'-10"	.337	.406		1240			22,000	31,000	22,000	31,000	DBA-5	A	–		11.998	0°

DUANE ARNOLD ENERGY CENTER
IES UTILITIES
UPDATED FINAL SAFETY ANALYSIS REPORT

TYPICAL TRIPLE FLUED HEAD FITTING

FIGURE 6.2-8

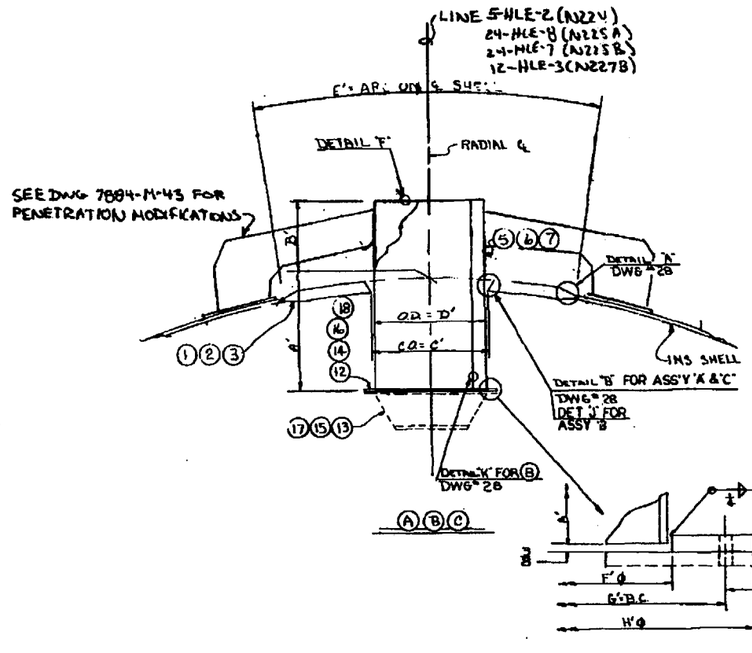

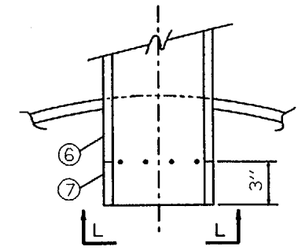

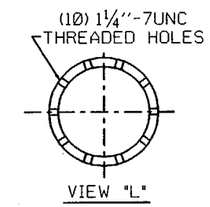

PC.	MARK	PC.	DESCRIPTION				
1	230-A		PENETRATION N224				
	230-5	1	6" DIA. PIPE, SCH 80	E	G	*	
	230-1	1	PL. 24" DIA. x 1¼" ROLL (CW/224-3) SEE C.S. #C-12			* *	
	230-12	1	PL. 11" O.D. x 1" x 6¾" I.D. (C5/PL. 60 x 20'-0) SEE C.S. #C-18			* *	
1	230-13		STRAINER			* * *	
4	230-18		⅝" DIA. STUDS W/2 NUTS EA.	D	H	** SA 516 GR 70	
2	230-B		PENETRATION N225A&B				
	230-6	2	PL. 71 15/32" x 1¼" ROLL (CW/224-4) SEE C.S. #C-12	E	D	* *	
	230-2	2	PL. 42" DIA. x 1¼" ROLL (CW/224-3) SEE C.S. #C-12			* *	
	230-14	2	FLANGES (SEE NOTE 4)				
2	230-15		STRAINERS (SEE NOTE 3)				
40	230-18		1¼" HEX HD. STUDS W/NUTS				
1	230-C		PENETRATION N227B				
	230-7	1	12" DIA. PIPE, SCH 80	E	D	*	
	230-3	1	PL. 25" DIA. x 1¼" ROLL (CW/224-4) SEE C.S. #C-12			* *	
	230-16	1	FLANGE (SEE NOTE 4)				
1	230-17		STRAINER (SEE NOTE 3)				
20	230-18		1¼" HEX HD. STUDS W/NUTS				

* SA 333 GR 1 (MS 537B)
** SA 516 GR 70 TO SA 300 (MS 504B)
*** SA 240 TYPE 304 S.S.

NOTES:
1. WORK THIS DWG. WITH DWG. # 28
2. P.W.H.T. ASS'Y OF NECK TO INSERT R. - CODE REQ'T.
3. FOR STRAINERS AT PENETRATIONS N225A/B AND N227B SEE DWG. M471-001 AND M471-002.
4. SEE DWG. M471-003 FOR THE STRAINER FLANGES AT PENETRATIONS N225A/B AND N227B.

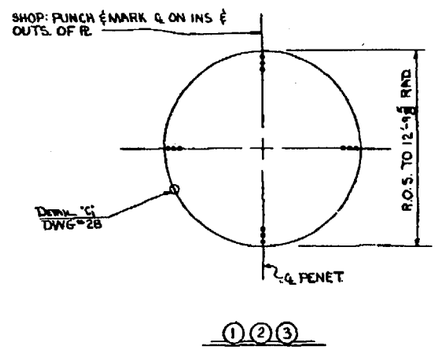

ASS'Y	A'	B'	C'	D'	E'	F'	G'	H'
A	1'-0 3/8"	11 5/8"	6 7/8"	6 3/8"	2'-0	6 3/4"	9	11
B	10"	11 5/8"	24 1/4"	24	3'-7	SEE NOTE 3 & 4		
C	9⅞"	11 5/8"	13	12 3/4"	2'-1	SEE NOTE 3 & 4		

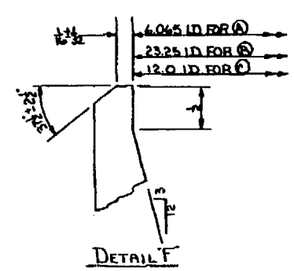

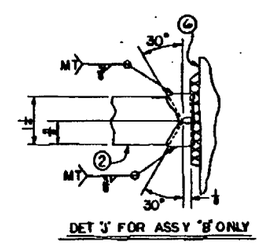

IOWA ELECTRIC LIGHT AND POWER COMPANY
DUANE ARNOLD ENERGY CENTER - UNIT 1
FALLS IOWA

DUANE ARNOLD ENERGY CENTER
IES UTILITIES
UPDATED FINAL SAFETY ANALYSIS REPORT

SUPPRESSION CHAMBER RADIALPENETRATION WITH STRAINERS

FIGURE 6.2-41

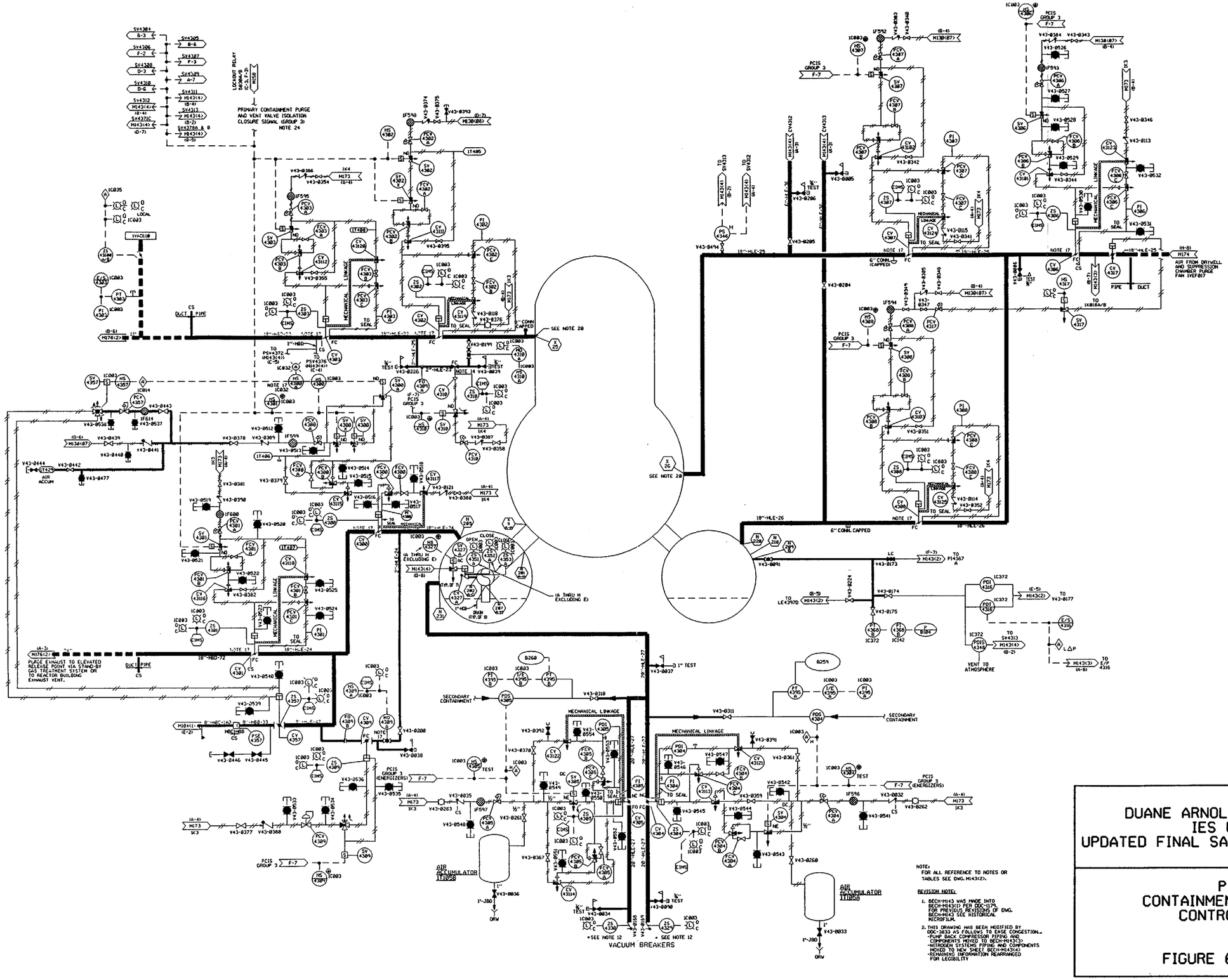

NOTE:
FOR ALL REFERENCE TO NOTES OR TABLES SEE DWG. M143<2>.

REVISION NOTE:

1. BECH-M143 WAS MADE INTO BECH-M143<1> PER DCC-1179. FOR PREVIOUS REVISIONS OF DWG. BECH-M143 SEE HISTORICAL MICROFILM.
2. THIS DRAWING HAS BEEN MODIFIED BY DCC-3033 AS FOLLOWS TO EASE CONGESTION.
   - PUMP BACK COMPRESSOR PIPING AND COMPONENTS MOVED TO BECH-M143<3>
   - NITROGEN SYSTEMS PIPING AND COMPONENTS MOVED TO NEW SHEET BECH-M143<4>
   - REMAINING INFORMATION REARRANGED FOR LEGIBILITY

DUANE ARNOLD ENERGY CENTER
IES UTILITIES
UPDATED FINAL SAFETY ANALYSIS REPORT

P & ID
CONTAINMENT ATMOSPHERE
CONTROL SYSTEM

FIGURE 6.2-44 SH. 1

BECH-M143<1> REV. 38

REVISION 15 - 5/00

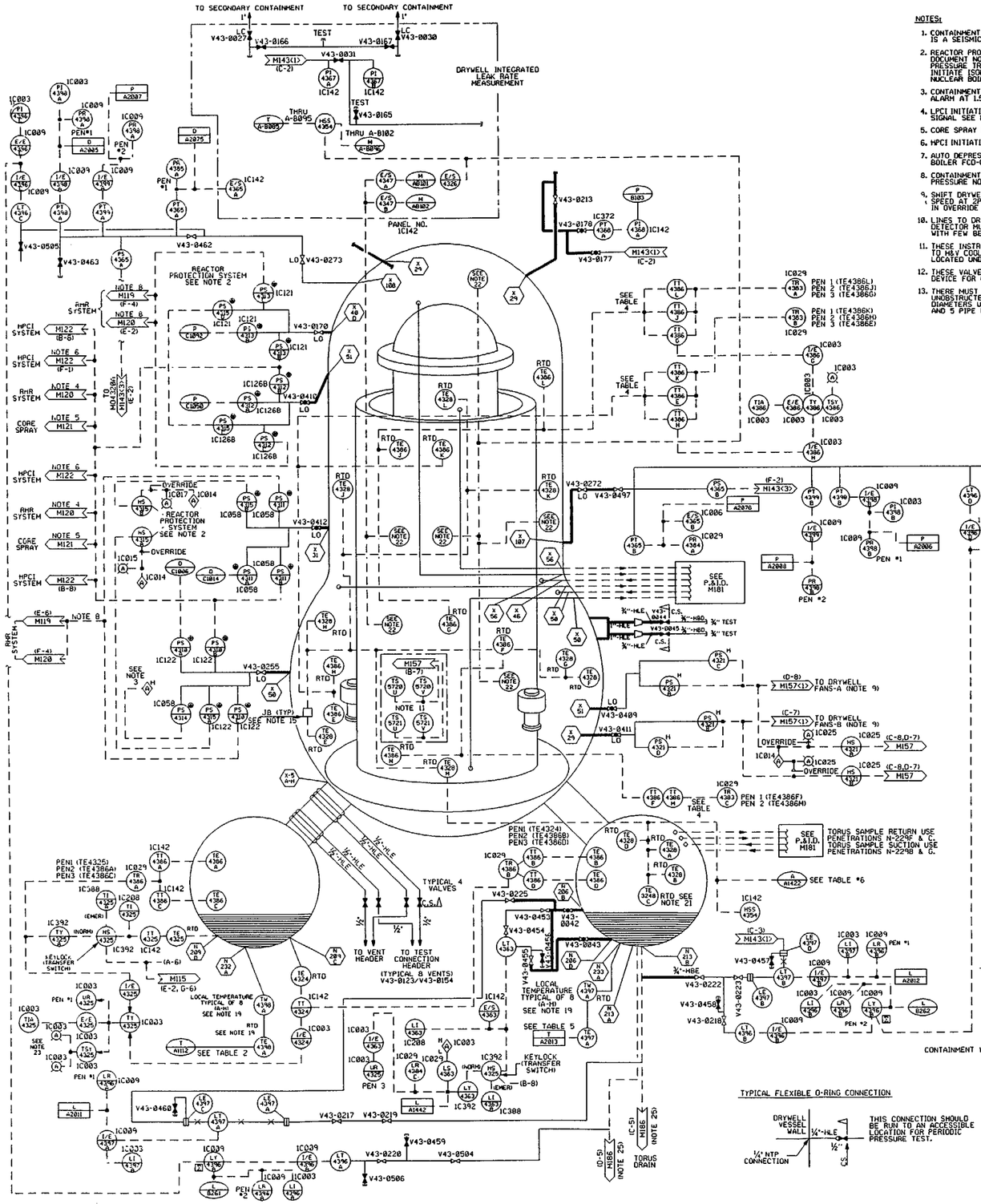

NOTES:

1. CONTAINMENT ATMOSPHERIC DILUTION SYSTEM IS A SEISMIC 1 DESIGN.
2. REACTOR PROTECTION SYSTEM IED-GE DOCUMENT NO.791E611 CONTAINMENT HIGH PRESSURE TRIP-THESE SWITCHES ALSO INITIATE ISOLATION FUNCTIONS ON THE NUCLEAR BOILED FCD-GE DOCUMENT 761E557.
3. CONTAINMENT HIGH PRESSURE APPROACH ALARM AT 1.5 PSIG.
4. LPCI INITIATION SIGNAL & RHR SELECTION SIGNAL SEE M120 NOTES 1&3.
5. CORE SPRAY INITIATION SEE M120 NOTE 1.
6. HPCI INITIATION SEE M122 NOTE 1.
7. AUTO DEPRESSURIZATION SYSTEM ON NUCLEAR BOILER FCD-GE DOCUMENT NO.761E557.
8. CONTAINMENT SPRAY PERMISSIVE DRYWELL PRESSURE NOT LOW.
9. SHIFT DRYWELL VENTILATION FANS TO LOW SPEED AT 2PSIG. UNLESS HS-4321A/B IS/ARE IN OVERRIDE.
10. LINES TO DRYWELL ATMOSPHERE RADIOACTIVITY DETECTOR MUST BE AS SHORT AS POSSIBLE. WITH FEW BENDS AND STAINLESS STEEL.
11. THESE INSTRUMENTS CONTROL COOLING WATER TO M&V COOLERS. THE INSTRUMENTS ARE LOCATED UNDER THE REACTOR VESSEL.
12. THESE VALVES ARE EQUIPPED WITH A MANUAL DEVICE FOR OPENING.
13. THERE MUST BE, AS A MINIMUM, A STRAIGHT UNOBSTRUCTED RUN OF AT LEAST 15 PIPE DIAMETERS UPSTREAM OF THE FLOW ELEMENT AND 5 PIPE DIAMETERS DOWN STREAM.
14. THIS SECTION OF LINE MUST INCLUDE A STRAIGHT RUN OF PIPE SUFFICIENT FOR THE ACCURATE OPERATION OF A FLOW-METER i.e. AT LEAST 25 DIAMETERS LONG.
15. A JUNCTION BOX WITH 15 FT OF COILED CABLING IS PROVIDED FOR EACH TEMPERATURE AND MOISTURE ELEMENT LOCATED IN THE CONTAINMENT.
16. ALL INSTRUMENT LINES ARE STAINLESS STEEL.
17. VALVES CV4300, CV4301, CV4302, CV4303, CV4306, CV4307 AND CV4308 PRESENTLY LIMITED TO 30° TRAVEL FROM THE CLOSED POSITION.
18. CHECK VALVE V43-0172 INTERNALS HAVE BEEN REMOVED.
19. THERE ARE 8 THERMOWELLS AND 8 ASSOCIATED RTD'S PER DIVISION FOR LOCATIONS SEE DRAWING M43 AND C3271.
20. DEBRIS SCREEN REQUIRED ON DRYWELL SIDE OF PENETRATION X-25 AND X-26.
21. RTD'S IN TORUS NOT UNDERWATER.
22. ILRT DEW CELL CLASSIFIED AS TEST EQUIPMENT.
23. LIGHT INDICATES NOT ALL INPUTS BEING AVERAGED.
24. HS-4356A/B OVERRIDE ALL GROUP 3 ISOLATION SIGNALS. THEY ARE LOCATED ON IC015/17 AND ALARM ON IC014 USE AS DIRECTED BY EOPS. SEE APED-A71-003.
25. TORUS DRAIN AND SUCTION LINES SHOWN ON BECH-M186.

TABLE 1

COMPUTER POINT FOR PRIMARY CONTAINMENT PRESSURE SWITCHES

SWITCH	POINT
4310A	C-0506
4310B	C-0507
4310C	C-0512
4311A	C-0514
4311B	C-0521
4311C	C-0546
4312A	C-0550
4312B	C-0576
4312C	C-0591
4313A	C-0592
4313B	C-0593
4313C	C-0594
4315A	C-0512
4315B	C-0513
4315C	C-0514
4315D	C-0515

TABLE 2

TORUS WATER TEMPERATURE

TE4398B	A1113
TE4398C	A1435
TE4398D	A1436
TE4398E	A1443
TE4398F	A1444
TE4398G	A1445
TE4398H	A1446

TABLE 3

ELECTRICAL PENETRATION TEST CONNECTIONS

PENETRATION	PI	V43-	COMMON HEADER
104A	43104A	0482	A
104B	43104B	0483	A
100F	43100F	0484	A
100E	43100E	0485	A
103	43103	0486	A
100G	43100G	0487	A
100C	43100C	0489	B
100B	43100B	0490	B
104D	43104D	0491	B
104C	43104C	0492	B
101A	43101A	0474	C
105B	43105B	0475	C
106A	43106A	0476	C
101C	43101C	0478	D
105D	43105D	0480	D
106C	43106C	0479	D
N2308	43109	0493	NONE

TABLE 4

SPDS I.D. POINTS FOR DRYWELL TEMPERATURE RTD'S

RTD	POINT
TT4386E	A2057
TT4386F	A2058
TT4386G	A2059
TT4386H	A2060
TT4386J	A2061
TT4386K	A2062
TT4386L	A2063
TT4386M	A2064

TABLE 5

SPDS I.D. POINTS FOR TORUS WATER TEMPERATURE

RTD	POINT
TE4397A	A2013
TE4397B	A2014
TE4397C	A2015
TE4397D	A2016
TE4397E	A2017
TE4397F	A2018
TE4397G	A2019
TE4397H	A2020

TABLE 6

TORUS/DRYWELL AIR TEMPERATURE

TE4328B	A1423	DECK 2
TE4328C	A1424	DECK 3
TE4328D	A1425	DECK 4
TE4328E	A1426	DECK 5
TE4328F	A1427	DECK 6
TE4328G	A1428	DECK 7
TE4328H	A1429	DECK 8
TE4328J	A1430	DECK 9
TE4328K	A1431	DECK 10
TE4328L	A1432	DECK 11
TE4328M	A1433	DECK 12

TABLE 7

COMMON HEADER ISOLATION VALVES

HEADER	V43-
A	0488
B	0473
C	0472
D	0481

TYPICAL ELECTRICAL PENETRATION TEST CONNECTION

(PRESSURE GAUGE AND VALVE SUPPLIED WITH PENETRATION ASSEMBLY) SEE TABLE 3

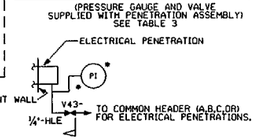

TYPICAL FLEXIBLE O-RING CONNECTION

COMMON HEADER (TYPICAL) SEE TABLE 7

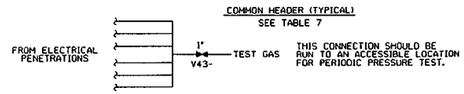

DUANE ARNOLD ENERGY CENTER
IES UTILITIES
UPDATED FINAL SAFETY ANALYSIS REPORT

P & ID
CONTAINMENT ATMOSPHERE CONTROL SYSTEM

FIGURE 6.2-44 SH. 2

BECH-M143<2> REV. 21

REVISION 15 - 5/00

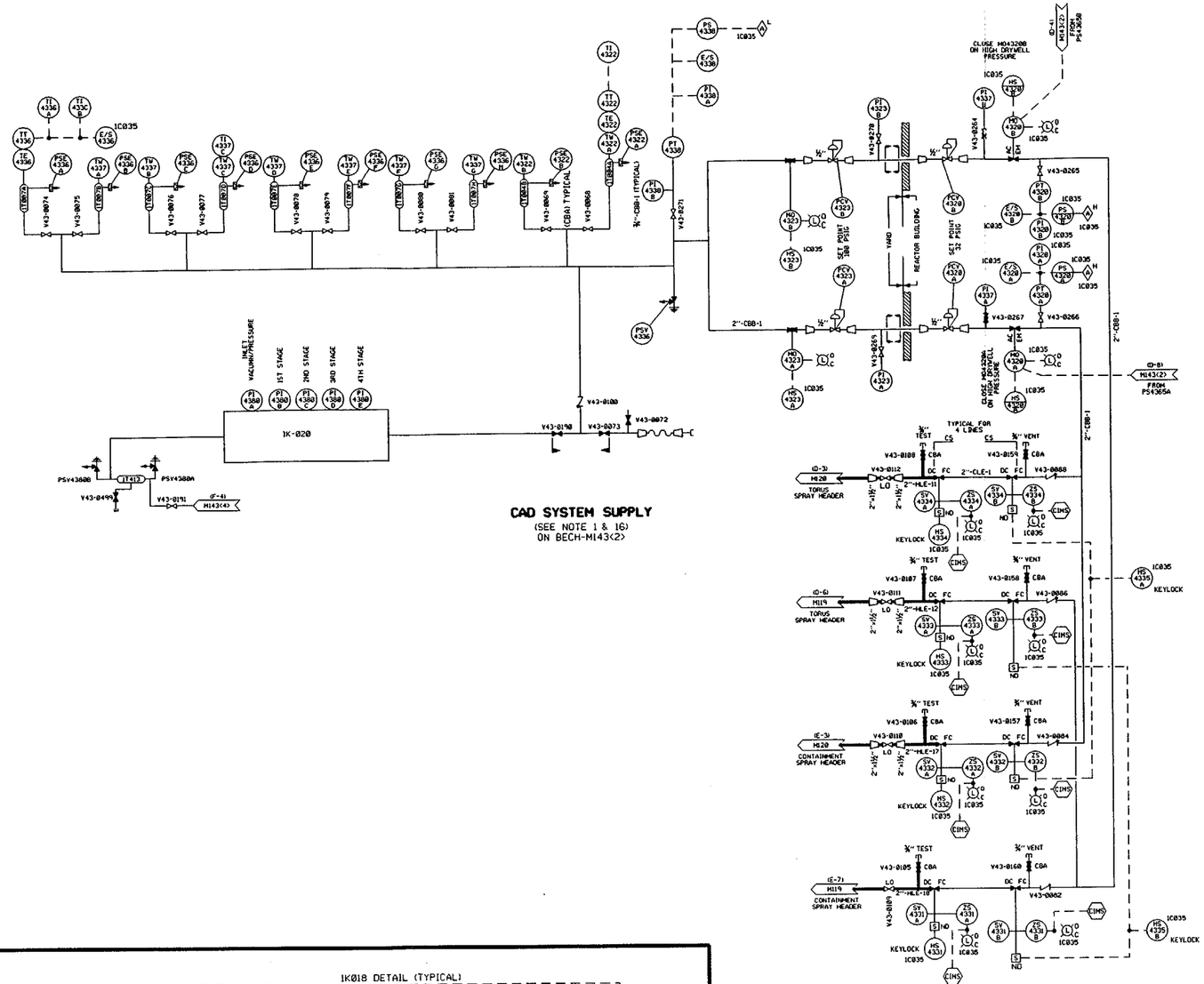

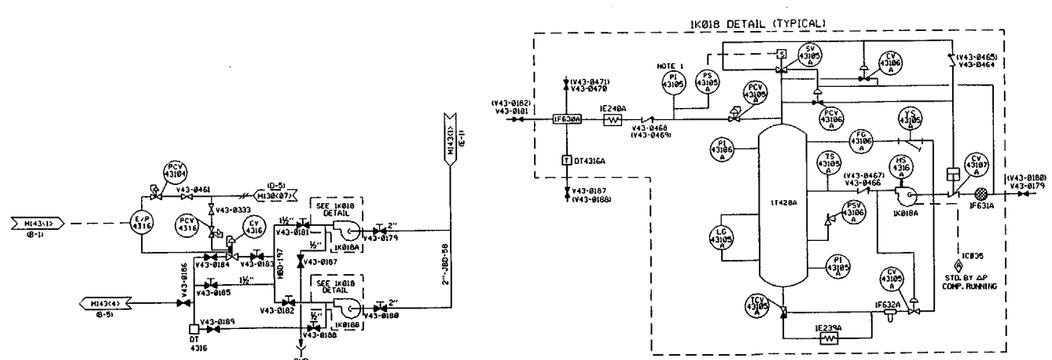

NOTE 1: P143105 IS ON THE A COMPRESSOR ONLY.

FOR 1K018B ALL A'S BECOME B'S AND VALVE NUMBERS ARE SHOWN IN PARENTHESIS.

NOTE:
ANY REPAIRS OR REPLACEMENT ACTIVITIES MAY BE PERFORMED USING DESIGN GUIDE M111 FOR THE PORTIONS OF CAD PIPING WHICH IS CURRENTLY CONSTRUCTED TO ASME SECTION III.

DUANE ARNOLD ENERGY CENTER
IES UTILITIES
UPDATED FINAL SAFETY ANALYSIS REPORT

P & ID
CONTAINMENT ATMOSPHERE
CONTROL SYSTEM

FIGURE 6.2-44 SH. 3

PARTS LIST

Item No.	Part Number	Qty	Description	ASME OR AISI Material	Material and Non-Destructive Exam. CM	N	UT	MP	PT	R	V	Notes
1.	LC-240-797	1	Pallet Seat Assembly									8
1.1	LC-240-779	1	Seat (Mach)	(LC-240-778)					X			7,8,9
-	LC-240-778	1	Seat (Weld Assem)					X		X		8,6
1.1.1	LD-240-734	1	Seat Flange (Mach)	(LB-240-748)								9
-	LB-240-748	1	Flange	A350-LF1	X	X	X					9,6
1.1.2	LC-240-762	1	Seat Ring (Mach/Weld)	(LC-240-749)								3,8
-	LC-240-749	1	Seat Ring (Form)	(LC-240-774-3)								4,9
-	LC-240-774-3	1	Seat Ring	A516 GR. 70								8
1.1.3	LA-240-750	2	Hinge Ear	(LC-240-774-5)								8
-	LC-240-774-5	2	Hinge Ear	A516 GR. 70	X	X	X					8
1.1.4	LA-240-733-1	A/R	Weld Rod	SFA5.1/E7018	X	X						9
1.1.5	LA-240-709	A/R	Weld Rod	SFA5.9/ER309	X							9
1.1.6												
1.2	LC-240-751	1	Pallet Assem.									7,8,9
1.2.1	LC-240-2573	1	Pallet	ASME SA-705 TYPE 630	X	X	X					10
-												
-												
1.2.2	LB-240-2575	1	Hinge Arm LH	ASME SA-705 TYPE 630	X	X						10
-												
1.2.3	LB-240-2574	1	Hinge Arm RH	ASME SA-705 TYPE 630	X	X						10
-												
1.2.4	LA-240-2407	4	Stud 3/8	ASME SA-564 GR 630							X	10
-		A/R	3/8 Dia. Rounds									
1.2.5	LA-240-2582	4	Hex Nut 3/8	ASME SA194 GR8M							X	10
1.2.6	LA-240-2578-1	1	Stud 1/4	ASME SA193 GR8M							X	10
1.2.7	LA-240-2578-2	16	Stud 1/4	ASME SA193 GR8M							X	10
-		A/R	1/4" Dia. Rounds									
1.2.8	LA-240-2448	4	WASHER, 3/8	ASTM A-276							X	10
1.3	SP-388-A	A/R	Silicone Sealant	Dow #781								1
1.4	LB-240-2431	1	Seal	EPDM 50 DURO								10
1.5	LC-240-783	1	Seal Retainer (Mach)	(LC-240-804)								8
-	LB-240-804	1	Seal Retainer (Rolled)	304 S.S.								2,9
1.6	LB-240-775	1	Magnet Plate	410 S.S.								8
1.7	LA-240-2581	16	Hex Nut 1/4-28	ASME SA194 GR8M							X	10
1.8	SP-1000-AF	1	Hex Cap Screw 1/4-28	303 S.S.							X	2,9
1.9	LA-240-2447	16	Washer 1/4	ASTM A-276								10
1.10	SP-322-F	2	Lock Washer	18-8 S.S.								
1.11	LA-240-2579	2	Hinge Bushing	OIL-IMPREGNATED							X	10
-		A/R	1" Dia. Rounds	Bronze								
1.12	LA-240-2576	1	Hinge Shaft	ASME SA564 GR 630							X	10
-		A/R	9/16 Dia.									
1.13	SP-331-JC	4	Set Screw	18-8 S.S.								
1.14	LA-240-32	2	Retainer CLIP, 3/16"	Ph15-7 Mo S.S.								10
1.15	LA-240-620	2	Adjuster Stud	303 S.S.								8
1.16	LA-240-741	2	Adjuster Stud	303 S.S.								8
1.17	LA-240-780-1	1	O-Ring	Ethylene Propylene								1,2,9
1.18												
1.19												
1.20	SP-1027-AA	A/R	Retaining Compound	Loctite RC60								10
2.	LC-240-851	1	Housing (weld)	-					X		X	3,7,8
2.1	LD-240-763	1	Flange (Mach)	(LB-240-764)								9
-	LB-240-764	1	Flange	A350 LF1	X	X	X					9,6
2.2	LB-240-766	1	Body (Weld/Mach)	(LC-240-774-1)								8,9,4
-	LC-240-774-1	1	Body	A516 GR.70	X	X	X					9
2.3	LC-240-769	1	Reducer 18 X 30	(LC-240-770)								8
-	LC-240-770	1	Reducer, Ellipsoidal	(LC-240-774-6)								3,9
-	LC-240-774-6	1	Reducer	A516 GR. 70	X	X	X					8
2.4	LB-240-782	1	18" Weld Neck Flange	A350 GR. LF1	X	X	X					2,8,6
2.5	LA-240-731	1	3/4 N.P.T. Drain Conn	(LA-240-805)								8
2.6	LA-240-543	3	Lift Ears (Form)	(LC-240-774-4)								9
-	LC-240-774-4	3	Lift Ears	A516 GR. 70	X	X	X					8
2.7	LA-240-578	1	1" Sch. 80 Soc. Weld	(LA-240-805)								8
2.8	LA-240-829	1	Switch Housing	(LA-240-805)								8
-	LA-240-805	A/R	2-1/4 Dia X 12-1/2 Lg.	A350 GR.LF1	X	X	X					9,6
2.9												
-												
-												
2.10	LA-240-791	2	Mounting Foot	(LC-240-774-7)								8
-	LC-240-774-7	2	Mounting Foot	A516 GR. 70	X	X	X					8
2.11	LA-240-733-1	A/R	Weld Rod	SFA 5.1 GR.E7018	X	X						9
3.	LC-240-932	1	Hinge Post (mach)	(LC-240-931)								8,7,9
3.1	LC-240-931	1	Hinge Post (weld)	(LC-240-930)								8
3.11	LC-240-930	1	Hinge Post (form)	SA285 GR.C	X	X						9
4.	LC-240-915	1	Actuator Arm Assem.	—								7,8,9
4.1	LC-240-917	1	Actuator Arm (Mach.)	(LC-240-916)								8
4.11	LC-240-916	1	Actuator Arm (Blank)	SA285 GR.C	X							9
4.2	LA-240-189	1	Pivot Nub	304 S.S.								8
4.3	LA-240-190	1	Roller Nub	304 S.S.								8
5.	LA-240-650	2	Bearing	Bronze								1,9
6.	LA-240-19	1	Shaft 1/2	303 S.S.								8
7.	LA-240-645	2	Roller	303 S.S.								8
8.	LA-240-841-1	2	Retainer Ring 1/2	Ph15-7 Mo S.S.								1,9
9.	LA-240-651	2	Bearing	Bronze								8
10.	LA-240-20	1	Shaft	303 S.S.								8
-												
11.	LA-240-541-2	2	Retainer Ring 5/8	Ph15-7 Mo S.S.								1,9
12.	241-117	1	Lockwasher	18-8 S.S.								6
13.	LA-240-787	1	Magnet	Alnico Gr. V								9
14.	LA-240-518	1	Magnet Spacer	2013-T3 Alum								3,8
15.	LA-240-738	1	Magnet Spacer	(SP-1020-B)								2,9
16.	LA-240-585	3	Shim 1/32	304 S.S.								9
17.	LA-240-623	3	Shim 1/64	304 S.S.								9
18.	LA-240-537-1	1	Socket Hd. Screw 7/16	18-8 S.S.							X	2,9
19.	SP-330-A	4	Hex. Hd. Screw	18-8 S.S.								
20.	SP-332-D	4	Plain Washer	18-8 S.S.								
21.	LA-240-813	A/R	Lubricant	Humble, UniRex N-2								1,9
22.	SP-203-CX	1	Pipe 1" X 3" Lg.	Sch 80 Pipe								
23.	SP-341-F	1	Pipe Cap	M.I.								
24.												
25.	LA-240-851	1	Pipe Plug	304 S.S.								
26.	LA-240-745	A/R	Rust Inhibitor	Manganesed Phos.								9
27.	LA-240-752	15	Plain Washer	302 S.S.								9
28.	LA-240-772-2	2	Hex Bolt 3/4	A-193 Gr. B7							X	2,9
29.	LA-240-772-1	17	Hex Bolt 3/4	A-193 Gr. B7							X	2,9
30.	LA-240-786	1	Nameplate	18-8 S.S.								9
31.	SP-32-E	6	Drive Screw	18-8 S.S.								
32.	LB-240-808	1	Cylinder	Parker-Hannifin								9
33.	LA-240-817	1	Piston Rod Head	303 S.S.								8
34.	SP-331-GD	1	Set Screw #10	18-8 S.S.								
35.	SP-328-X	4	Soc. Hd. Screw 3/8	18-8 S.S.								
36.	SP-323-C	4	Lock Washer 3/8	18-8 S.S.								
37.												
38.	LA-240-802	1	Air Control Valve	Hannifin SP-22								9

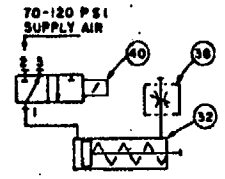

PNEUMATIC DIAGRAM

PARTS LIST NOTES:

1. Recommended Spare Parts.
2. Certificates of Compliance to Material Specification.
3. Weld Specification & Procedure: LA-240-187, LA-240-217, LA-240-274, LA-240-276
4. Cold Forming Procedure: LA-240-248
5. Hot Forming Procedure: LA-240-196, LA-240-197
6. Heat Treatment Procedure: LA-240-200
7. Paint Specification: LA-240-245
8. Quality Control (Q.C.) Check List and Process Sheets (in-plant operation)
9. Receiving Quality Control (R.Q.C.) Check List (Buy Out)
10. SEE M129-002 FOR DETAILS

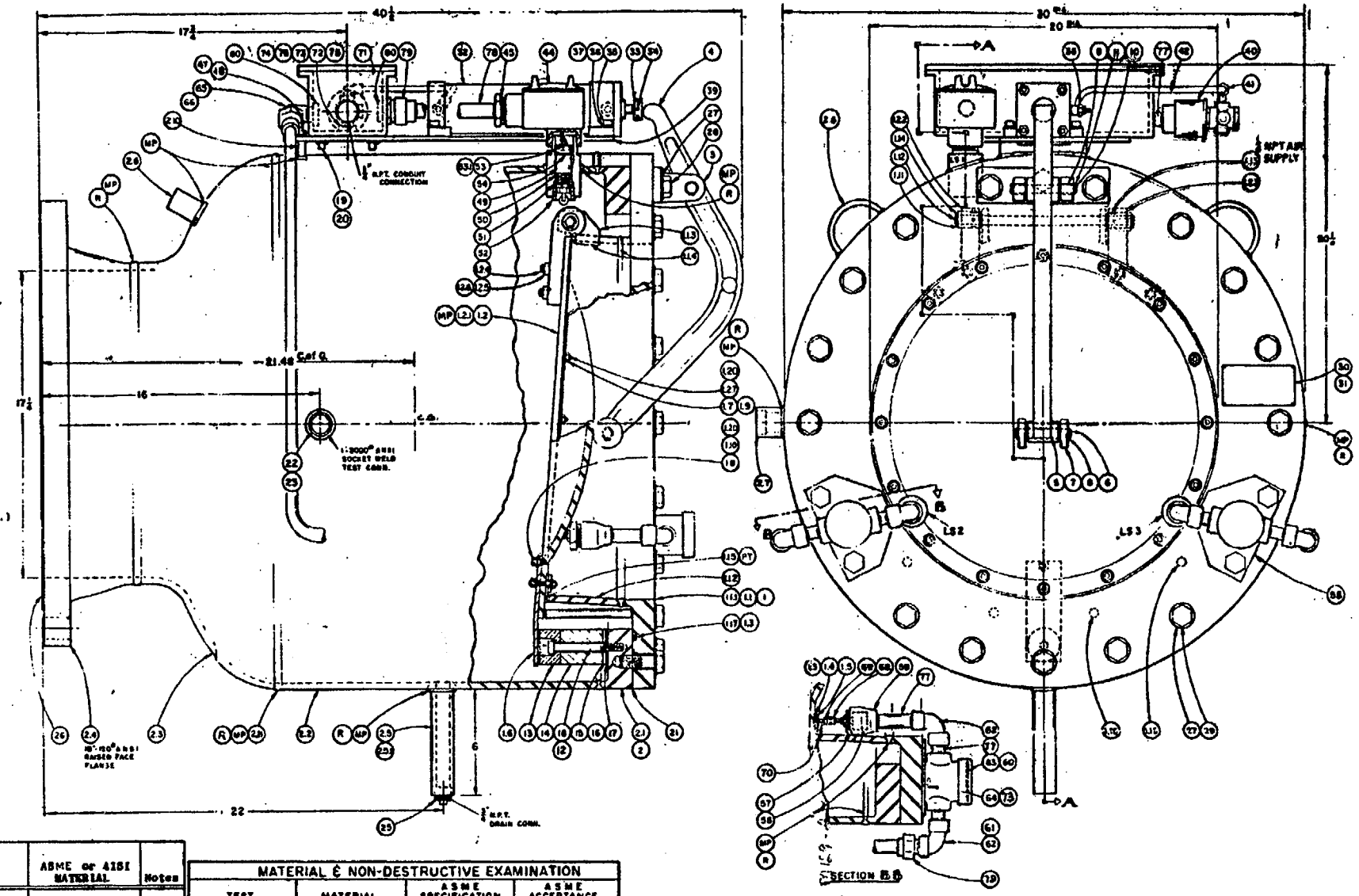

Item No.	Part Number	Qty	Description	ASME or AISI MATERIAL	Notes
39.	LB-240-807	1	Mounting Plate	SA285 Gr. C	9
40.	LA-240-742	1	Solenoid	Asco #8320A83E	8
41.	SP-82-K	2	Male Conn. 1/4Tx1/4N	Parker 4CBTX-S	
42.	LA-240-601	1	Tubing 1/4 (.035 Wall)	304 S.S.	9
43.					
44.	LA-240-824	1	Switch Box	Alum.	9
45.	LA-240-825	1	Reducer Bushing	Alum.	9
46.					
47.	SP-98-BJ	4	Screw Hex. Hd. 1/4-20	18-8 S.S.	
48.	SP-332-E	4	Plain Washer	18-8 S.S.	
49.	LB-240-816	1	Switch	Licon 63-T00085	1,9
50.	LA-240-814	1	O-Ring	Ethylene Propylene	1,2,9
51.	LA-240-34	1	O-Ring Retainer	303 S.S.	8
52.	LA-240-38	1	Retainer Screw	303 S.S.	8
53.	LA-240-822	1	Adjuster Screw	—	8
-	LA-240-823	1	Screw	303 S.S.	8
53.1	LA-240-91	1	Plug	Nylon	9
54.	241-153	1	Washer	302 S.S.	1,9
55.	LA-240-858	1	Plate R.H.	1100 Alum.(SB 209)	9
56.	LB-240-754	2	Switch	Licon 65-43X095	1,9
57.	LA-240-755	2	Switch Retainer	303 S.S.	8
58.	LA-240-859	1	Plate L.H.	1100 Alum.	9
59.	LA-240-757	2	Reducer	Alum	9
60.	LA-240-852	2	Conduit Box Seal	(SP-1020-B)	8
61.	LA-240-796	2	Conduit Nipple 2"	(LA-240-792)	9
62.	LA-240-795	4	Conduit Ts. El 90°	Alum	9
63.	LA-240-857	2	Conduit Box	Cast Alum	9
64.	SP-403-TJ	4	Screw 1/4-28 X 5/8	18-8 S.S.	
65.	LA-240-761	2	Union El 90°	Alum	9
66.	LA-240-792	2	Conduit	Alum	9
67.					
68.	LA-240-759	2	Sw. Adjuster	303 S.S.	8
69.	SP-330-V	6	Jam Nut	18-8 S.S.	
70.	LA-240-763-2	2	Stud	(LA-240-804)	8
71.	LC-240-830	1	Terminal Box Name 4	Cast Alum	9
72.	LA-240-864	1	Terminal Board	Kulka 22014-10A	9
73.		1			
74.	LA-240-855	13	Spade Terminal	T.E.B. A16-8F	9
75.	LA-240-913	1	Back Strip	Alum.	
76.	SP-375-KJ	2	Screw R.H.M.S. #8	18-8 S.S.	
77.	LA-240-856	5	Conduit Nipple 1 1/2	Alum.	9
78.	LA-240-919	2	Conduit Nipple 5"	(LA-240-792)	9
79.	LA-240-398	4	Male Union	Alum	9
80.	LA-240-793	4	Bushing	Phenolic	9
-	SP-1020-B	A/R	1/8 Ethylene Propylene EPDM	Nordel	9

MATERIAL & NON-DESTRUCTIVE EXAMINATION

TEST	MATERIAL	ASME SPECIFICATION	ASME ACCEPTANCE
CM CHEMICAL & MECHANICAL PROPERTY	AS INDICATED	SEC. II MATERIAL SPEC.	SEC. III NC 2120 MATERIAL SPEC.
	BOLTING		SEC. III NC 2581
N CHARPY V-NOTCH	SA 350 GR. LF1	A 370	SEC. III NC 2320
	SA 516 GR. 70	A 593	
UT ULTRASONIC	SA 350 GR. LF1	SEC III NB 2542	
	SA 516 GR. 70	SEC. III NB 2532.1	
MP MAGNETIC PARTICLE	MACH SURFACES	SEC. III IX 3500	SEC. III NB 2545.3
	WELDS	SEC. III NB 5112 IX 3500	SEC. III NB 5341, NB 5342
PT LIQUID PENETRANT	WELD OVERLAY	SEC. III NB 5112 IX 3600	SEC. III NB 5351, NB 5352
R RADIOGRAPHY	PRESS. CONTAINING WELDS	SEC. III NB 5112 IX 3300	SEC. III NB 5321, NB 5322
	PRESS. CONTAINING CASTINGS	SEC. III NB 2573.2	SEC. III NC 2573 (ASTM E-71-64)
V VISUAL	BOLTS, STUDS, NUTS	SEC. III NB 2581, NB 2582	SEC. III NB 2582

GENERAL NOTES-

1. Instruction Manual LA-240-265
2. Tagging & Shipping Inst.....LA-240-236
3. Seismic Analysis.....LA-240-204
4. Hydrostatic/Leak/Setting Test.....LA-240-253
5. Function/Operation Test.....LA-240-238
6. Seat Area..... 314 Sq. In.
7. Maximum Pressure..... 62 p.s.i.g. test
8. Ambient Temperature..... +30°F to 350°F
9. Setting..... .1 to .35 p.s.i. differential
10. Valve Net Weight..... 890, Gross 1100
11. Limit Switches.....Contacts S.P.D.T. Rating: 10 Amp (LS2&3); 5 Amp. (LS1) Temperature: 0°F to 350°F Voltage: 115 V.A.C. Immersion Req: MIL-E5272
12. Solenoid: 120 VAC, 60 Hz, 6 watt Coil: NEMA Class B, Enclosure: NEMA 4 COIL NR 27-502-10 KIT NR 208-504

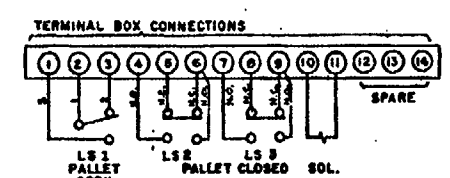

ELECTRICAL SCHEMATIC

(SWITCHES SHOWN IN SHELF POSITION)

DUANE ARNOLD ENERGY CENTER
IES UTILITIES
UPDATED FINAL SAFETY ANALYSIS REPORT

VACUUM BREAKER 18"-150 FLANGE
OUTLET 20" SEAT INLET

FIGURE 6.2-58

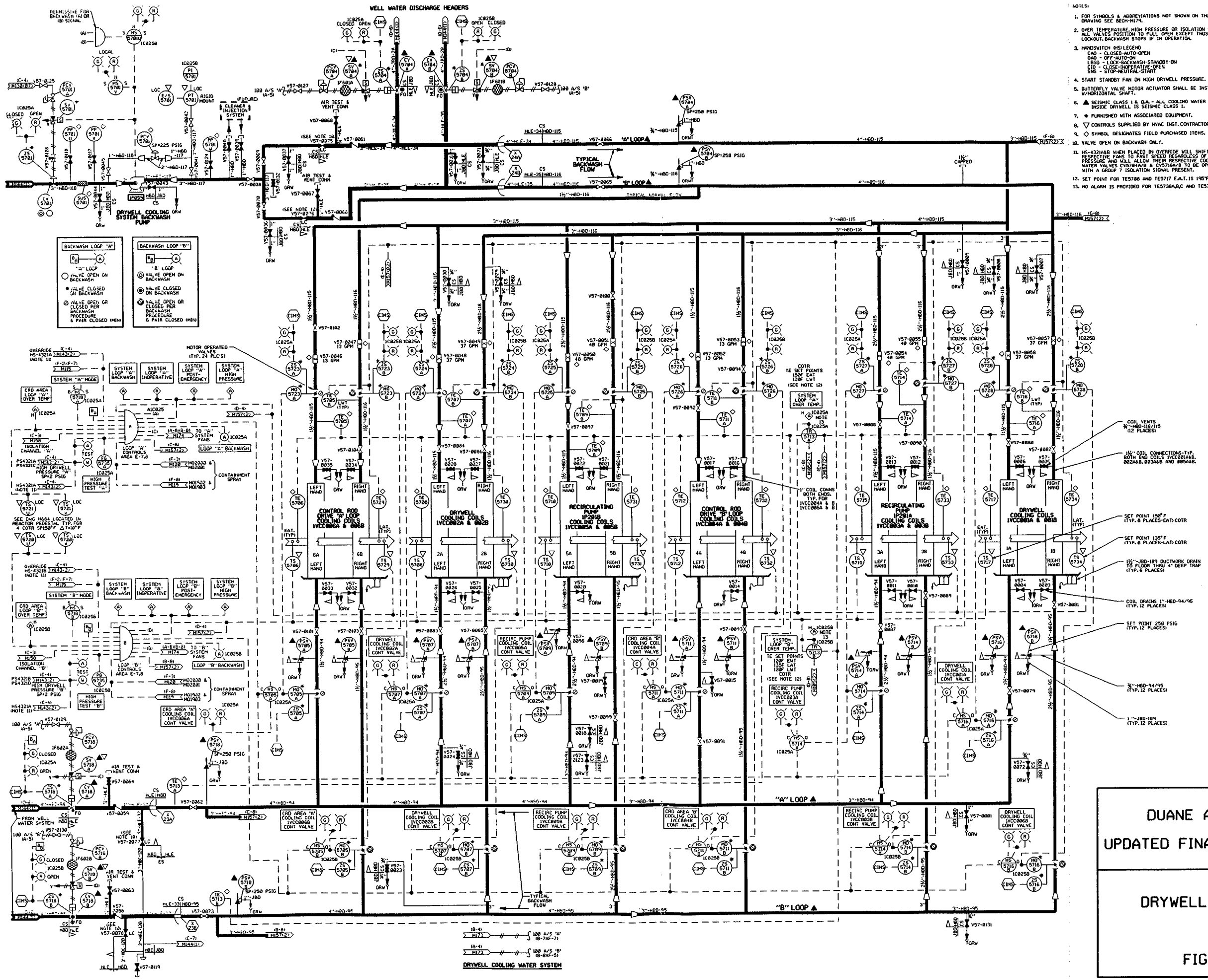

NOTES:

1. FOR SYMBOLS & ABBREVIATIONS NOT SHOWN ON THIS DRAWING SEE BECH-M17A.
2. OVER TEMPERATURE, HIGH PRESSURE OR ISOLATION SIGNAL, ALL VALVES POSITION TO FULL OPEN EXCEPT THOSE IN LOCKOUT. BACKWASH STOPS IF IN OPERATION.
3. HANDSWITCH HS1 LEGEND
   CAO - CLOSED-AUTO-OPEN
   OAO - OFF-AUTO-ON
   LBSO - LOCK-BACKWASH-STANDBY-ON
   CIO - CLOSE-INOPERATIVE-OPEN
   SNO - STOP-NEUTRAL-START
4. START STANDBY FAN ON HIGH DRYWELL PRESSURE.
5. BUTTERFLY VALVE MOTOR ACTUATOR SHALL BE INSTALLED W/HORIZONTAL SHAFT.
6. ▲ SEISMIC CLASS I & Q.A. - ALL COOLING WATER PIPING INSIDE DRYWELL IS SEISMIC CLASS I.
7. * FURNISHED WITH ASSOCIATED EQUIPMENT.
8. ▽ CONTROLS SUPPLIED BY HVAC INST. CONTRACTOR.
9. ◇ SYMBOL DESIGNATES FIELD PURCHASED ITEMS.
10. VALVE OPEN ON BACKWASH ONLY.
11. HS-4321A&B WHEN PLACED IN OVERRIDE WILL SHIFT THE RESPECTIVE FANS TO FAST SPEED REGARDLESS OF DRYWELL PRESSURE AND WILL ALLOW THEIR RESPECTIVE COOLING WATER VALVES CV5704A/B & CV5718A/B TO BE OPENED WITH A GROUP 7 ISOLATION SIGNAL PRESENT.
12. SET POINT FOR TE5708 AND TE5717 E.A.T.IS 195°F.
13. NO ALARM IS PROVIDED FOR TE5736A,B,C AND TE5739A,B,C.

DUANE ARNOLD ENERGY CENTER
IES UTILITIES
UPDATED FINAL SAFETY ANALYSIS REPORT

P & ID
DRYWELL COOLING WATER SYSTEM

FIGURE 6.2-60 SH.1

BECH-M157<1> REV. 18

REVISION 15 - 5/00

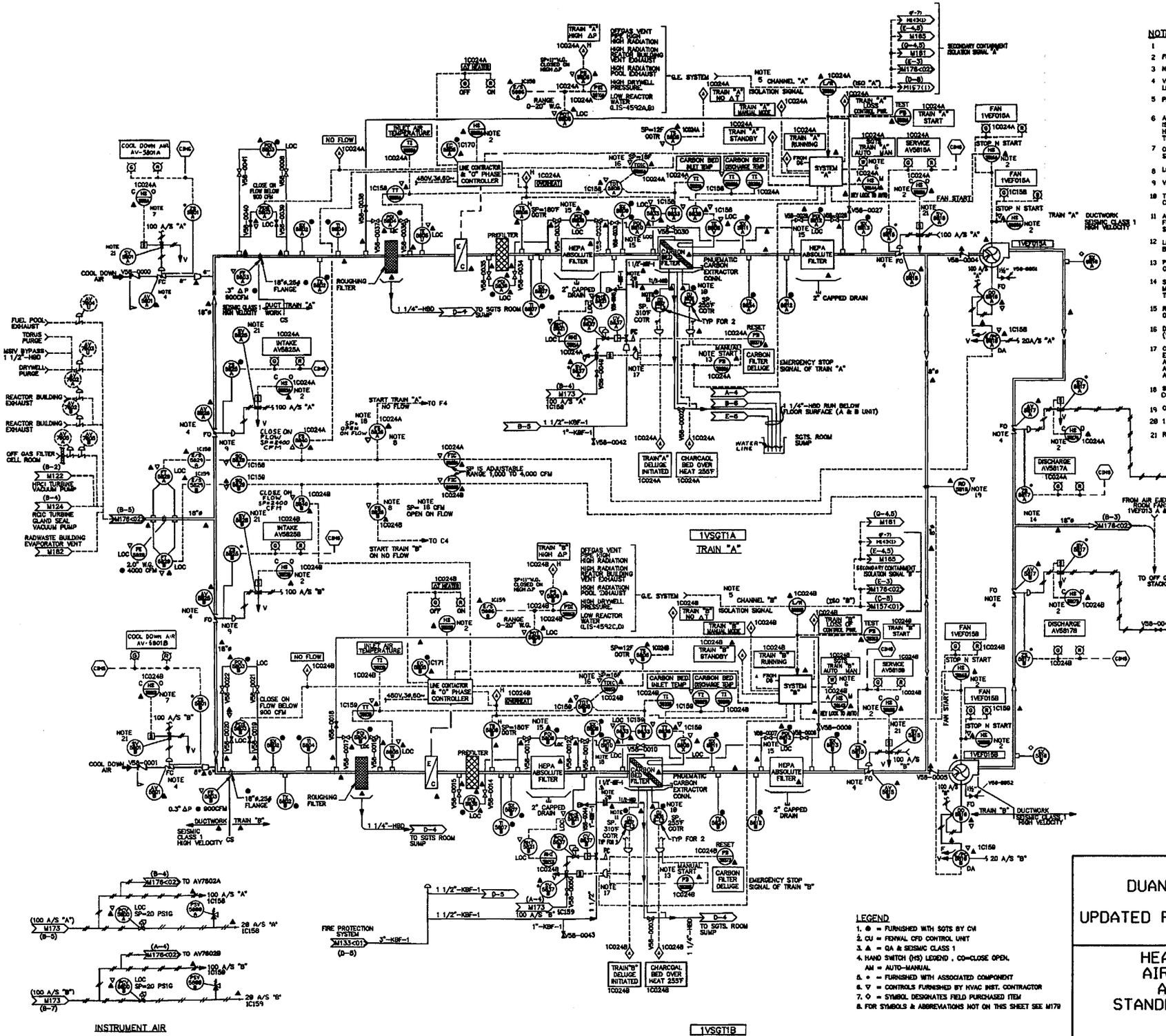

NOTES:

1
2 FUNCTIONAL ONLY ON MANUAL MODE OF HS5814
3 NO FLOW & ISOLATION SIGNAL STARTS TRAIN
4 VALVES POSITION AS NOTED; ON SIGNAL LOSS, CONTROL AIR LOSS OR POWER LOSS
5 PLANT MONITOR ISOLATION SIGNAL
6 AFTER VERIFICATION OF START SELECTED TRAIN IS PLACED IN STANDBY BY POSITIONING HAND SWITCH TO "MANUAL" & RETURNING IT TO "AUTOMATIC" POSITION
7 OPERATIONAL ONLY WHEN TRAIN IS IN STANDBY OR MANUAL MODE
8 LOSS OF FLOW OR POWER STARTS RESPECTIVE TRAIN
9 VALVE CLOSED ON STANDBY
10 TYPICAL FOR (2)TEMPERATURE ELEMENTS & SENSORS SP.2357 CHARCOAL BED OVER TEMPERATURE
11 AUTOMATIC START OF DELUGE WATER SYSTEM TYPICAL FOR (2)TEMPERATURE ELEMENTS & SENSORS SP.310T CHARCOAL BED EMER. OVER TEMPERATURE
12 LOCAL PANELS 1C158, 159, 170, & 171 SHALL BE SEISMIC CLASS 1
13 PUSH BUTTON SWITCH WITH SAFETY COVER FOR OPERATORS OPTION OF DELUGE SYSTEM
14 STACK FANS ADJUST AUTOMATICALLY TO RESULT IN MAINTAINING -0.25" TO -0.50"W.G. AT JUNCTION OF TRAIN "A" & "B" WITH EF015A & B NOT RUNNING
15 RUPTURE-PROOF DIFFERENTIAL ΔP INDICATOR 0-10"W.G. SCALE BARTON MODEL 200 OR EQUAL
16 DTC TO "0" PHASE CONTROLLER 3000 @ 50 MA SPAN (18KW-SCR ONLY)
17 ON FIRE DELUGE 1VEF015 A OR B STOPS
EC5805 DE-ENERGIZES.
AV5801 A OR B CLOSES
AV5815 A OR B CLOSES
AV5825 A OR B OPENS
18 SET POINT IS 3360 CFM TO ENSURE THAT SECONDARY CONTAINMENT IS MAINTAINED AT A VACUUM.
19 ORIFICE SIZED FOR 1000 CFM AT 16" W.G. ΔP
20 1 1/2" FLANGES WITH 1/4"ø ORIFICE PLATE
21 REPLACED UNDER DCR 1109

LEGEND
1. ● = FURNISHED WITH SGTS BY CVI
2. CU = FENWAL CFD CONTROL UNIT
3. ▲ = QA & SEISMIC CLASS 1
4. HAND SWITCH (HS) LEGEND . CO=CLOSE OPEN.
AM = AUTO-MANUAL
5. ◦ = FURNISHED WITH ASSOCIATED COMPONENT
6. ▽ = CONTROLS FURNISHED BY HVAC INST. CONTRACTOR
7. ◇ = SYMBOL DESIGNATES FIELD PURCHASED ITEM
8. FOR SYMBOLS & ABBREVIATIONS NOT ON THIS SHEET SEE M179

DUANE ARNOLD ENERGY CENTER
IES UTILITIES
UPDATED FINAL SAFETY ANALYSIS REPORT

HEATING, VENTILATION AND AIR CONDITIONING P & ID, AND AIR FLOW DIAGRAM STANDBY GAS TREATMENT SYSTEM

FIGURE 6.2-61

REVISION 15 - 5/00

BECH-M158 REV. 35

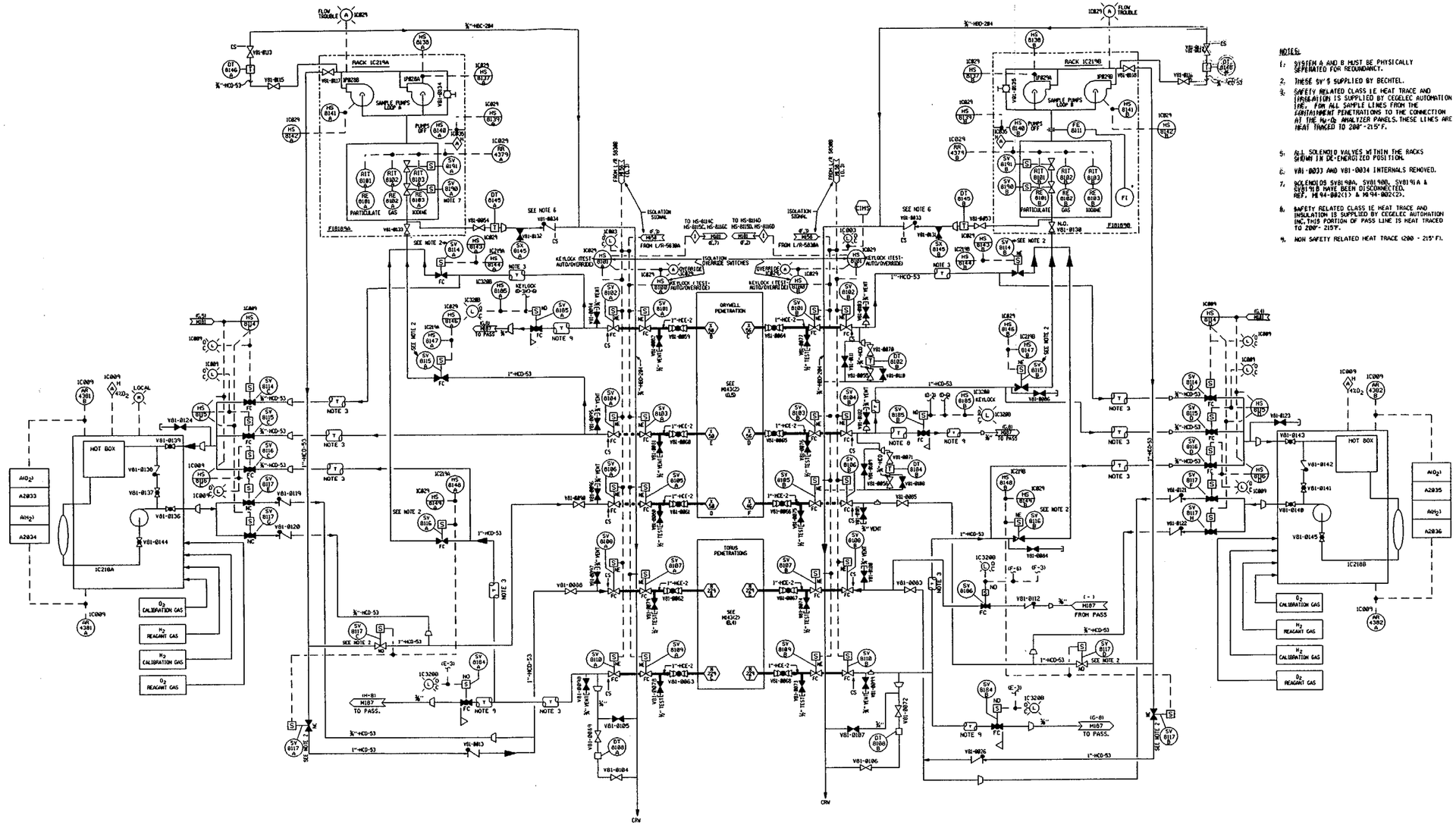

NOTES:

1. SYSTEM A AND B MUST BE PHYSICALLY SEPERATED FOR REDUNDANCY.
2. THESE SV'S SUPPLIED BY BECHTEL.
3. SAFETY RELATED CLASS 1E HEAT TRACE AND INSULATION IS SUPPLIED BY CEGELEC AUTOMATION INC. FOR ALL SAMPLE LINES FROM THE CONTAINMENT PENETRATIONS TO THE CONNECTION AT THE H_2-O_2 ANALYZER PANELS. THESE LINES ARE HEAT TRACED TO 200°-215°F.
5. ALL SOLENOID VALVES WITHIN THE RACKS SHOWN IN DE-ENERGIZED POSITION.
6. VB1-0033 AND VB1-0034 INTERNALS REMOVED.
7. SOLENOIDS SV8140A, SV8140B, SV8191A & SV8191B HAVE BEEN DISCONNECTED. REF. M94-0021(3) & M94-0021(2).
8. SAFETY RELATED CLASS 1E HEAT TRACE AND INSULATION IS SUPPLIED BY CEGELEC AUTOMATION INC. THIS PORTION OF PASS LINE IS HEAT TRACED TO 200°- 215°F.
9. NON SAFETY RELATED HEAT TRACE (200 - 215°F).

H_2-O_2 SAMPLE LINE HEAT TRACE

PENETRATION	HEAT TRACE	THERMOCOUPLE	PANEL	NOTE
DRYWELL X50B	1HTR3401	TE8151A	IC889A	3
DRYWELL X54E	1HTR3402	TE8151B		
TORUS N229C	1HTR3403	TE8151C		
DRYWELL X56C	2HTR4401	TE8150A	IC889B	
DRYWELL X56D	2HTR4402	TE8150B		
TORUS N229F	2HTR4403	TE8150C		
PASS	2HTR4404	TE8150D		8

DUANE ARNOLD ENERGY CENTER
IES UTILITIES
UPDATED FINAL SAFETY ANALYSIS REPORT

CONTAINMENT ATMOSPHERE MONITORING SYSTEM

FIGURE 6.2-65

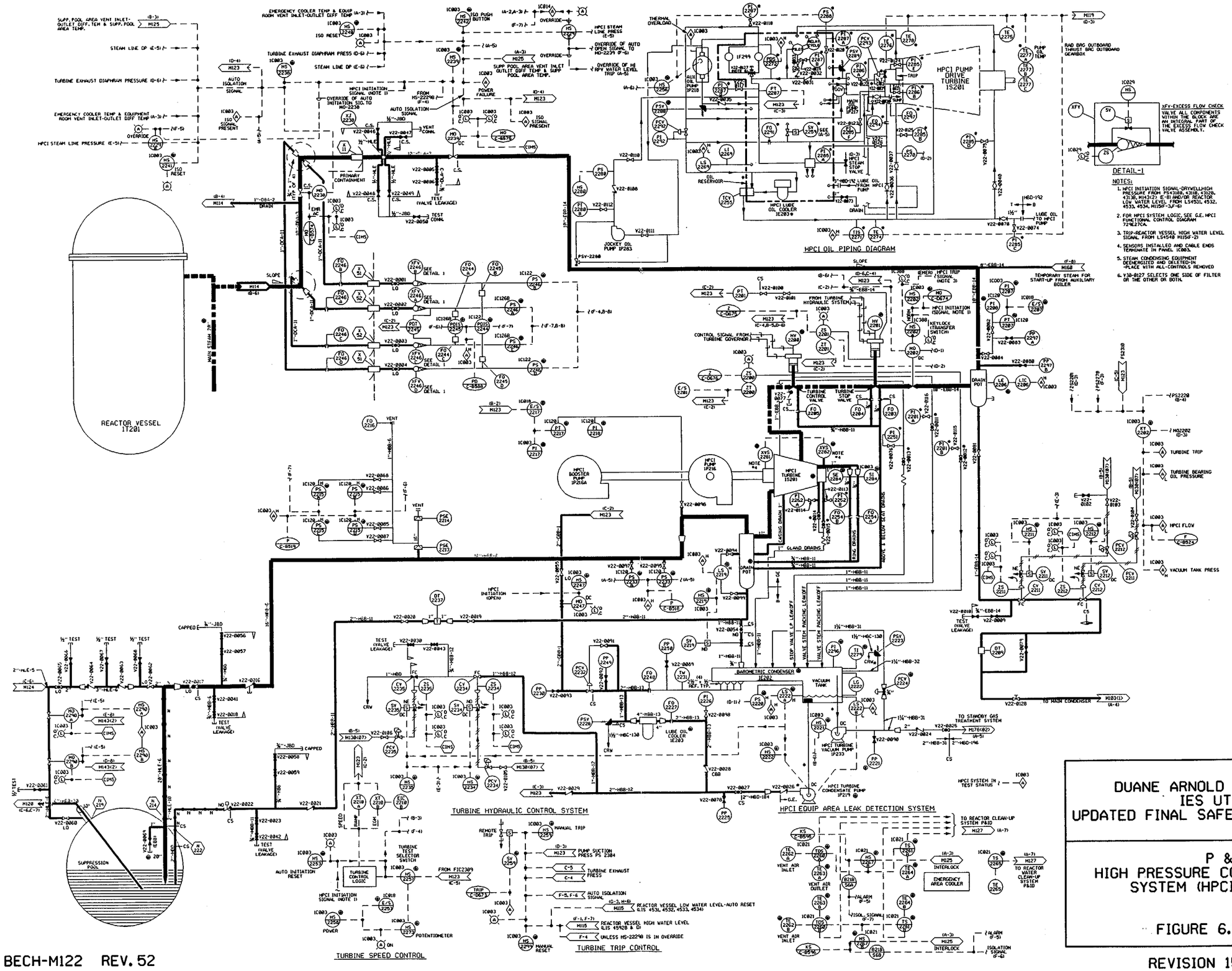

DUANE ARNOLD ENERGY CENTER
IES UTILITIES
UPDATED FINAL SAFETY ANALYSIS REPORT

P & ID
HIGH PRESSURE COOLANT INJECTION SYSTEM (HPCI) STEAM SIDE

FIGURE 6.3-7 SH. 1

BECH-M122 REV. 52

REVISION 15 - 5/00

NOTES:

1. HPCI INITIATION SIGNAL-DRYWELL HIGH PRESSURE FROM PS 4310B, 4310A, 4312B, 4313B, M143E-7) AND/OR REACTOR LOW WATER LEVEL FROM LIS 4531, 4532, 4533, 4534, M115(F-3, F-6).
2. FOR HPCI SYSTEM LOGIC, SEE G.E. FUNCTIONAL CONTROL DIAGRAM 729E627CA.
3. THIS VALVE WILL NOT AUTOMATICALLY OPEN (CLOSE) UNLESS IT HAS BEEN CLOSED (OPEN) FOR A NOMINAL TWO SECONDS. THIS IS TO PREVENT CHALLENGING THE ELETRICAL AND MECHANICAL INTERLOCKS ASSOCIATED WITH THE MOTOR CONTACTORS.
4. MO-2312 HAS A 1/8" DIAMETER HOLE DRILLED IN THE INBOARD DISC FACE TO PREVENT POTENTIAL PRESSURE LOCKING.

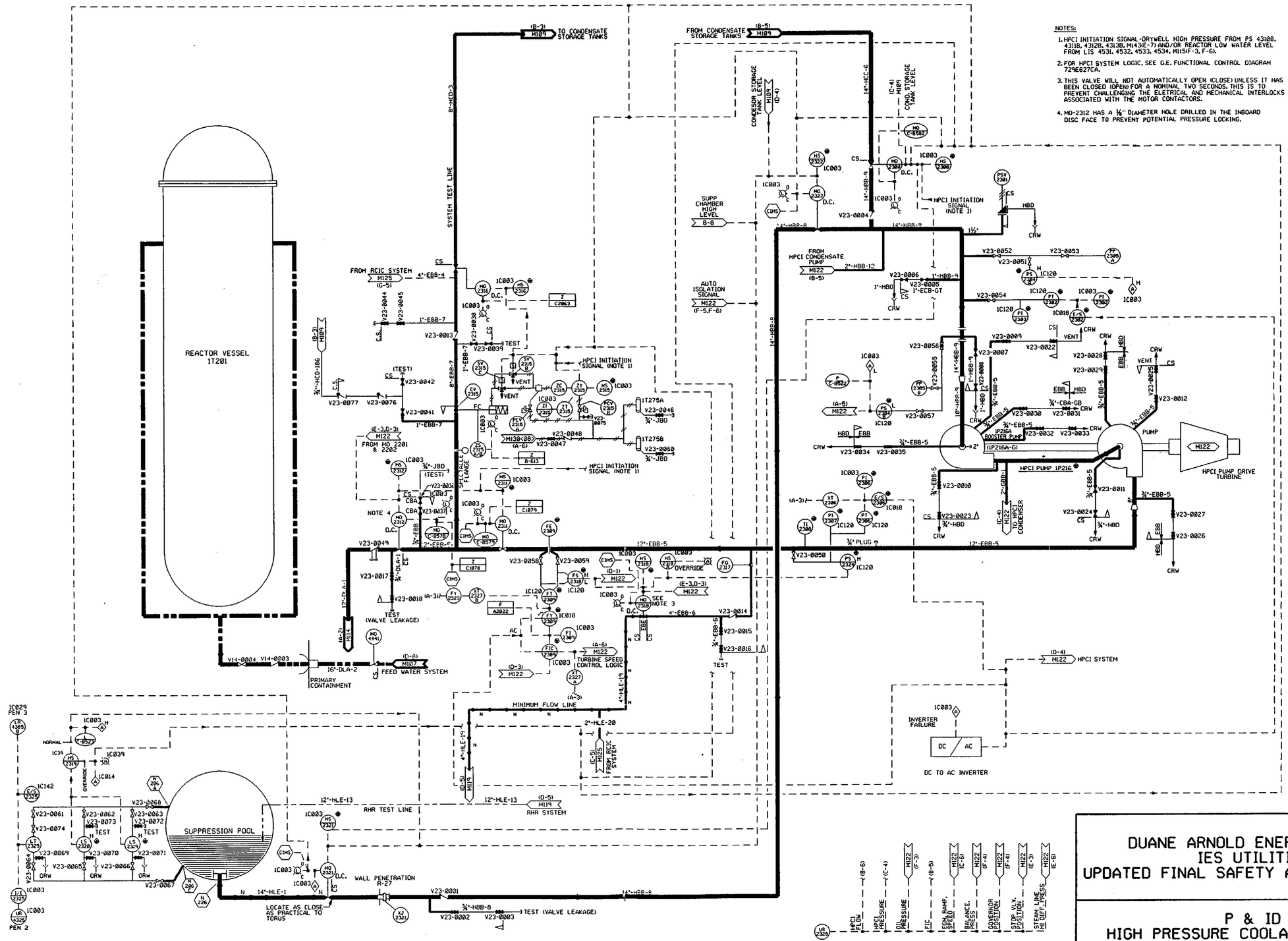

DUANE ARNOLD ENERGY CENTER
IES UTILITIES
UPDATED FINAL SAFETY ANALYSIS REPORT

P & ID
HIGH PRESSURE COOLANT INJECTION SYSTEM (HPCI) WATER SIDE

FIGURE 6.3-7 SH. 2

BECH-M123 REV. 37

REVISION 15 - 5/00

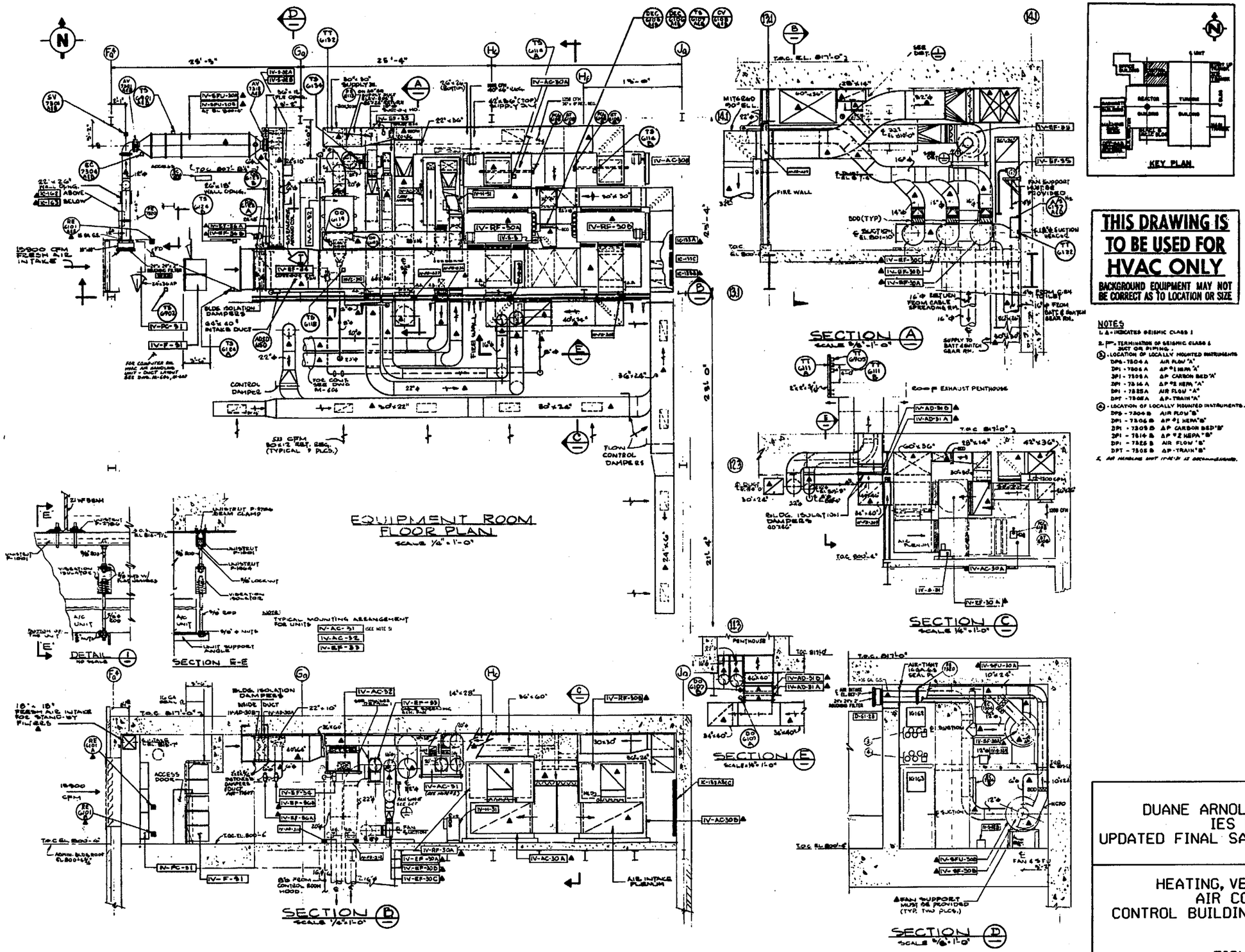

DUANE ARNOLD ENERGY CENTER
IES UTILITIES
UPDATED FINAL SAFETY ANALYSIS REPORT

HEATING, VENTILATION, AND AIR CONDITIONING
CONTROL BUILDING MECHANICAL ROOM

FIGURE 6.4-2

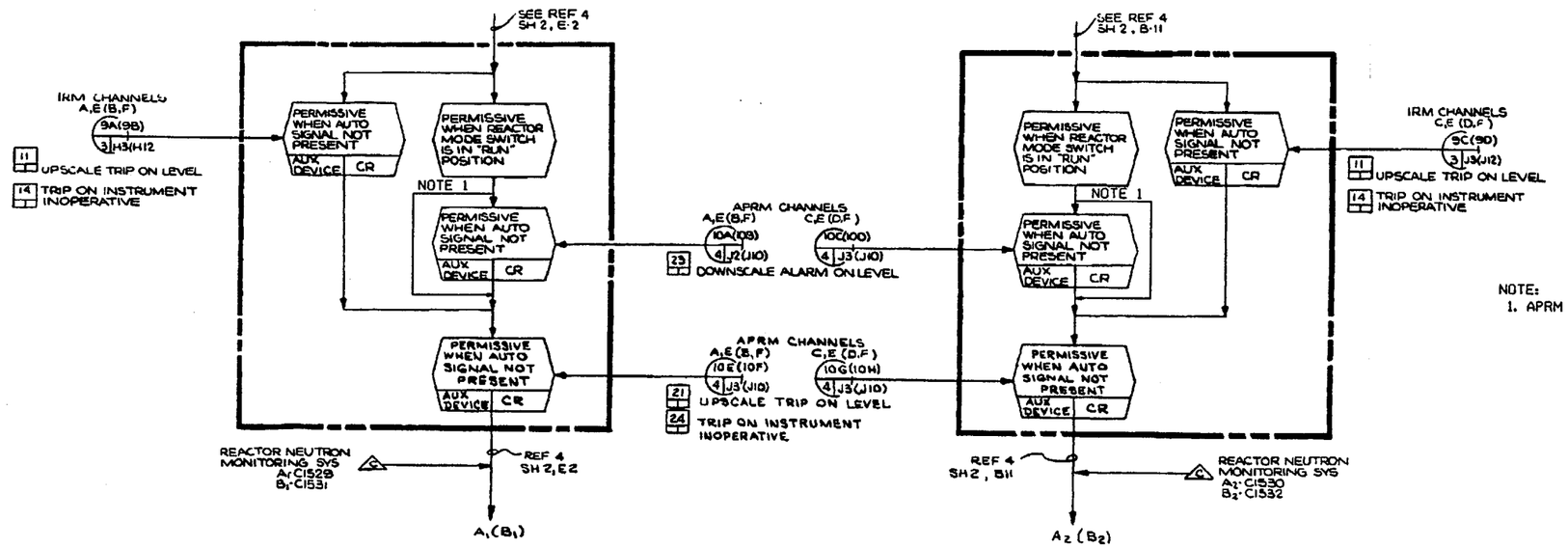

NOTE:
1. APRM DOWNSCALE TRIP JUMPERED.

DUANE ARNOLD ENERGY CENTER
IES UTILITIES
UPDATED FINAL SAFETY ANALYSIS REPORT

FUNCTIONAL CONTROL DIAGRAM FOR NEUTRON MONITORING LOGICS

FIGURE 7.2-5

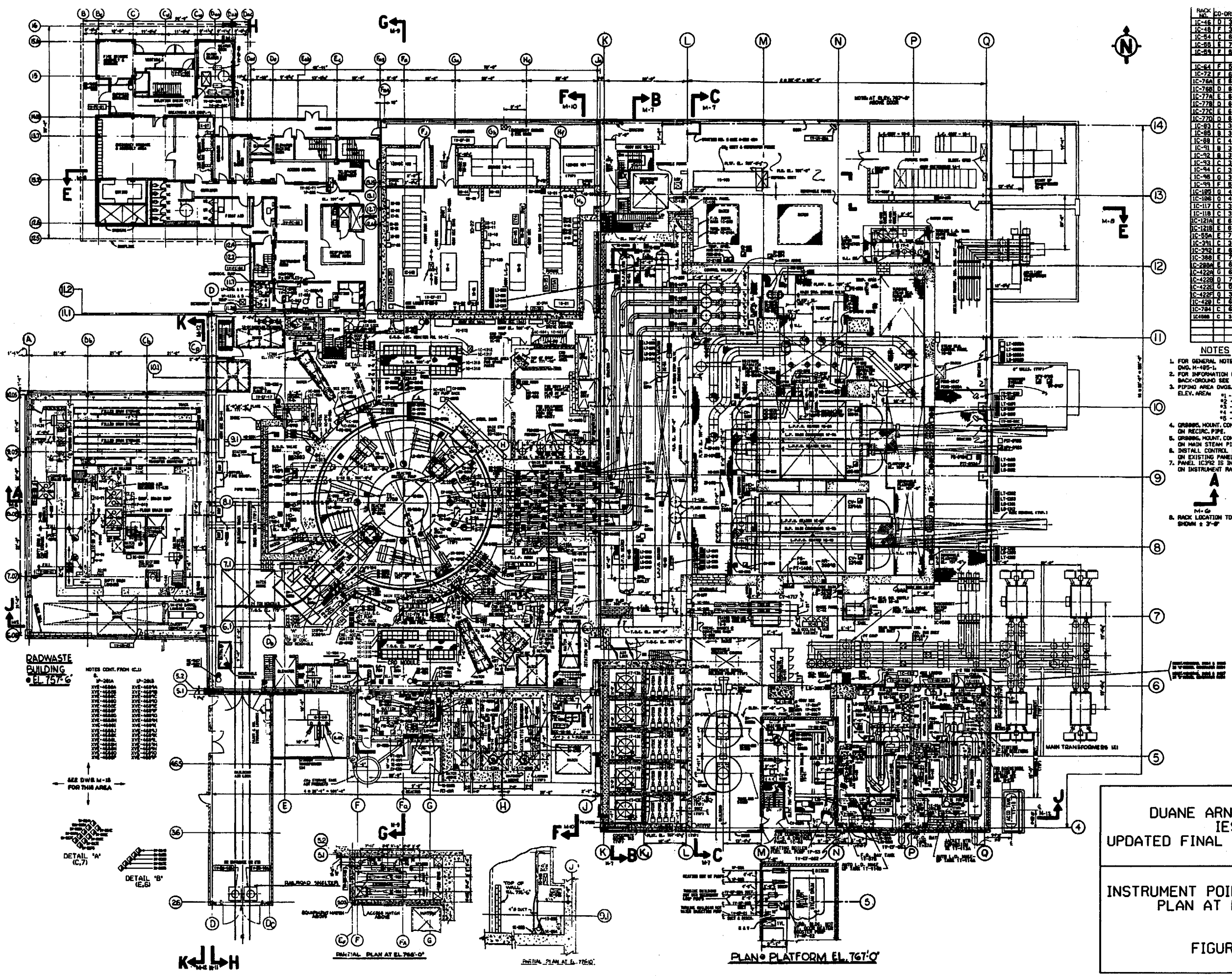

RACK NO.	CO-ORD.		RACK NO.	CO-ORD.	
1C-46	D	3	1C-122A	D	6
1C-48	F	3	1C-122B	D	6
1C-54	C	6	1C-122C	D	6
1C-55	E	7	1C-126A	E	5
1C-59	F	6	1C-126B	D	6
			1C-131A	C	6
1C-64	F	6	1C-131B	C	6
1C-72	F	6	1C-131C	C	6
1C-76A	E	6	1C-131D	C	6
1C-76B	D	6	1C-131E	F	6
1C-77A	E	6	1C-131F	F	6
1C-77B	D	6	1C-131G	F	6
1C-77C	E	6	1C-131H	E	6
1C-77D	D	6	1C-142	F	6
1C-83	C	3	1C-144	D	7
1C-85	B	3	1C-151	C	3
1C-89	C	4	1C-152	C	3
1C-91	B	3	1C-155	C	3
1C-92	B	3	1C-290	C	4
1C-93	C	3	1C-295	D	4
1C-94	C	3	1C-298	F	7
1C-98	D	3	1C-218A	D	4
1C-99	F	6	1C-218B	F	4
1C-105	D	4	1C-218A	D	6
1C-106	D	4	1C-218B	F	6
1C-117	C	3	1C-219A	D	6
1C-118	C	3	1C-219B	F	6
1C-121A	E	6	1C-188	D	4
1C-121B	E	6	1C-193A	D	5
1C-53A	E	7	1C-193B	E	5
1C-391	C	3	1C-193C	D	5
1C-392	E	6	1C-193D	E	5
1C-388	E	7	1C-189	C	6
1C-298A	E	6	1C-195	D	4
1C-422A	D	6	1C-145	E	5
1C-422B	D	7	1C-317	F	4
1C-422C	C	5	1C-372	D	11
1C-422F	D	3	1C-329A	F	7
1C-429	C	6	1C-329B	F	7
1C-794	C	6	1C-353	F	7
1C-298B	C	3	1C-394	F	5

NOTES

1. FOR GENERAL NOTES SEE DWG. M-495-1.
2. FOR INFORMATION ON "FADE OUT" BACKGROUND SEE DWG. M-2.
3. PIPING AREA DWGS. FOR THIS ELEV. AREA:
   #1 - M-283
   #2 - M-213
   #3 - M-233
   #4 - M-248
   #5 - M-268
4. ORIFICE, MOUNT, CONVENIENTLY ON RECIRC. PIPE.
5. ORIFICE, MOUNT, CONVENIENTLY ON MAIN STEAM PIPE.
6. INSTALL CONTROL PANEL 1C216A ON EXISTING PANEL 1C288
7. PANEL 1C392 IS INSTALLED ON INSTRUMENT RACK 1C-298A
8. RACK LOCATION TO BE AS SHOWN ± 3'-0"

DUANE ARNOLD ENERGY CENTER
IES UTILITIES
UPDATED FINAL SAFETY ANALYSIS REPORT

INSTRUMENT POINTS AND LINES DIAGRAMS
PLAN AT ELEVATION 757'-6"

FIGURE 7.3-2 SH. 1

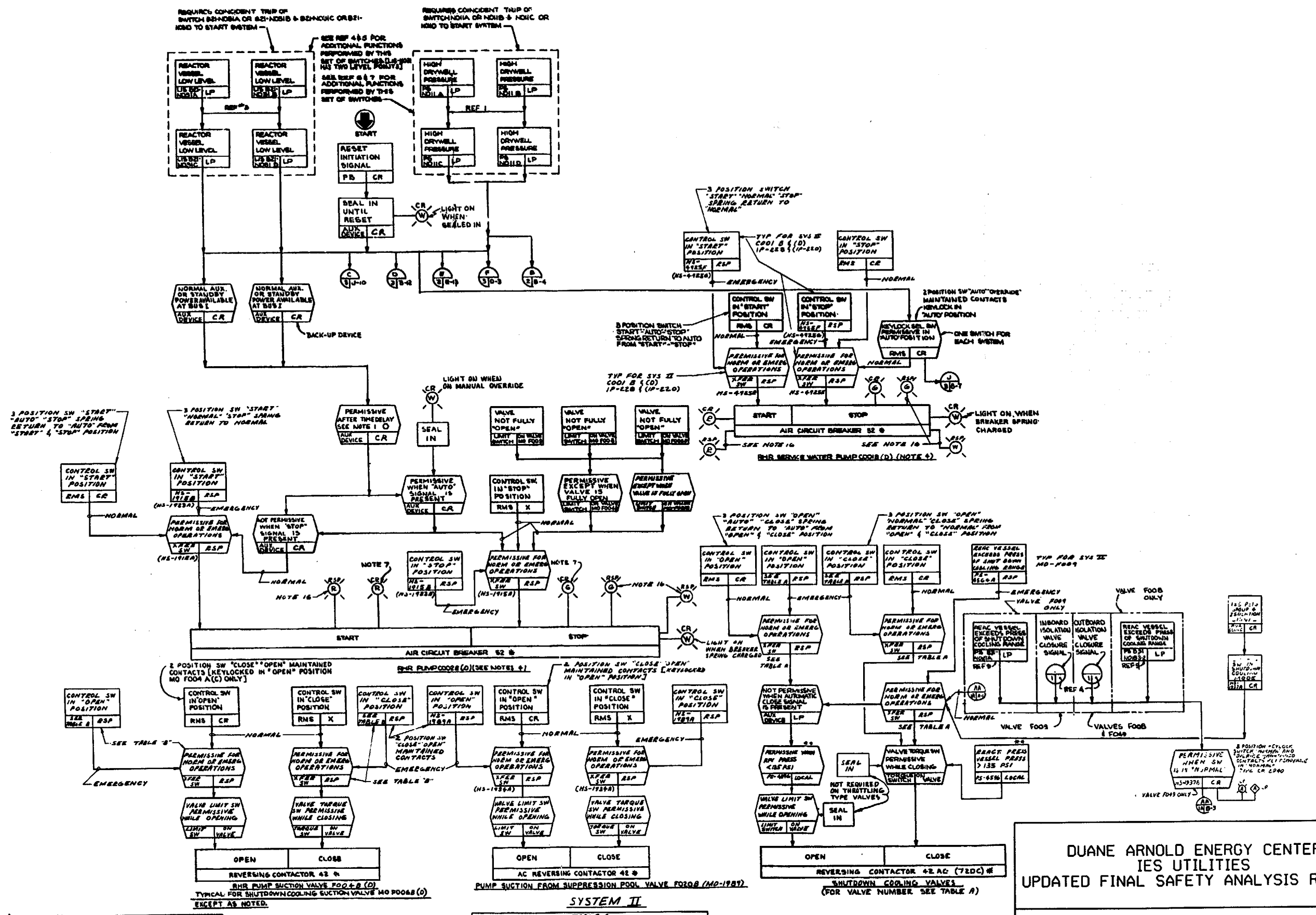

TABLE B			
APED	DREC	CONTROL SW	XFER SW
MO-F004B	MO-1913	HS-1912B	HS-1912B
MO-F004D	MO-1921	HS-1921B	HS-1920B
MO-F006B	MO-1912	HS-1912B	HS-1912B
MO-F009D	MO-1920	HS-1920C	HS-1920B

TABLE A					
TYPE	APED	DREC	RSP CONTROL SW	XFER SW
DC	MO-F008	MO-1909	HS-1909B	HS-1909A
AC	MO-F009	MO-1908	HS-1908B	HS-1908A
DC	MO-F049	MO-1937	SEE NOTE 15	HS-1937

DUANE ARNOLD ENERGY CENTER
IES UTILITIES
UPDATED FINAL SAFETY ANALYSIS REPORT

RESIDUAL HEAT REMOVAL SYSTEM

FIGURE 7.3-13 SH. 1A

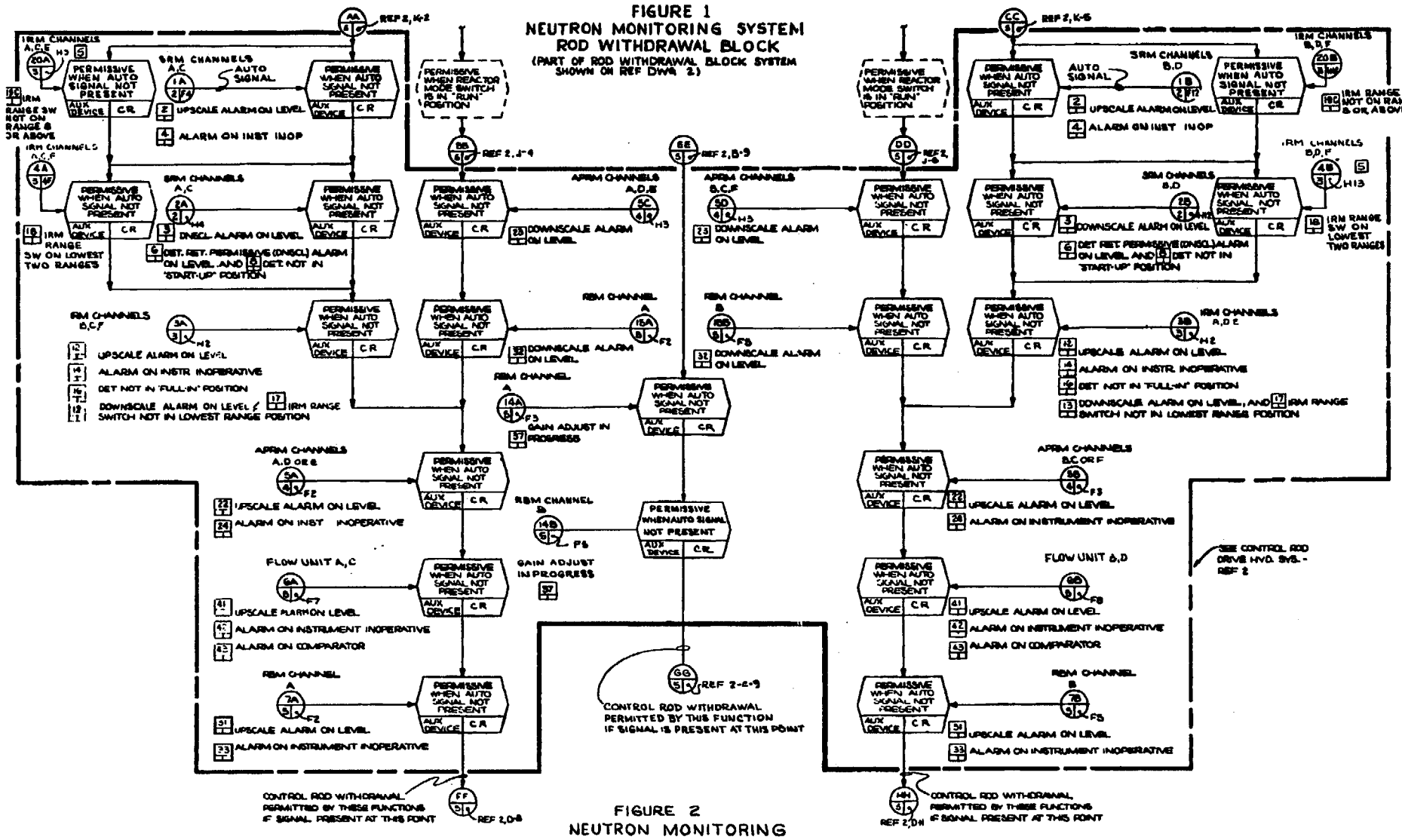

NOTES:

1. INPUTS TO COMPUTER ARE INDICATED CLOSE TO ALARM CONTACTS.
2. SEE SHEET 7.
3. SEE SHEET 7.
4. THE ENTIRE NEUTRON MONITORING SYSTEM IS A FULLY AUTOMATIC SYSTEM EXCEPT FOR MANUAL OPERATED SWITCHES.
5. ALL EQUIPMENT & INSTRUMENTS ARE PREFIXED BY C51 UNLESS OTHERWISE NOTED.
6. CHANNELS A,C,E ARE FOR TRIP SYSTEM A.
   CHANNELS B,D,F ARE FOR TRIP SYSTEM B.
7. APRM DOWNSCALE TRIP JUMPERED PER DWG-444741-444748.

LEGEND

IRM — INTERMEDIATE RANGE MONITOR
RBM — ROD BLOCK MONITOR
APRM — AVERAGE POWER RANGE MONITOR
SRM — SOURCE RANGE MONITOR
LPRM — LOCAL POWER RANGE MONITOR
TIP — TRAVERSING IN-CORE PROBE
MOC — MULTIPLE OUTPUT CONTROLLER

REFERENCE DOCUMENTS:

NOTE: SYSTEM SELECTION OPTIONS ARE INDICATED BY MULTIPLE MPL ITEM NUMBERS

	MPL ITEM NO
1. NEUTRON MONITORING SYSTEM FCD	C51-1010
2. CONTROL ROD DRIVE HYD SYS FCD	C18-C12-1020
3. NUCLEAR BOILER SYS FCD	B21-1020
4. REACTOR PROTECTION SYS FCD	C71-C72-1010
5. PROCESS COMPUTER SYSTEM INPUT/OUTPUT REQUIREMENTS DESIGN SPEC	C51-C52-1010
6. LOGIC SYMBOLS	208A4756
7. NEUTRON MONITORING SYS. ARRANGEMENT	C51-2010

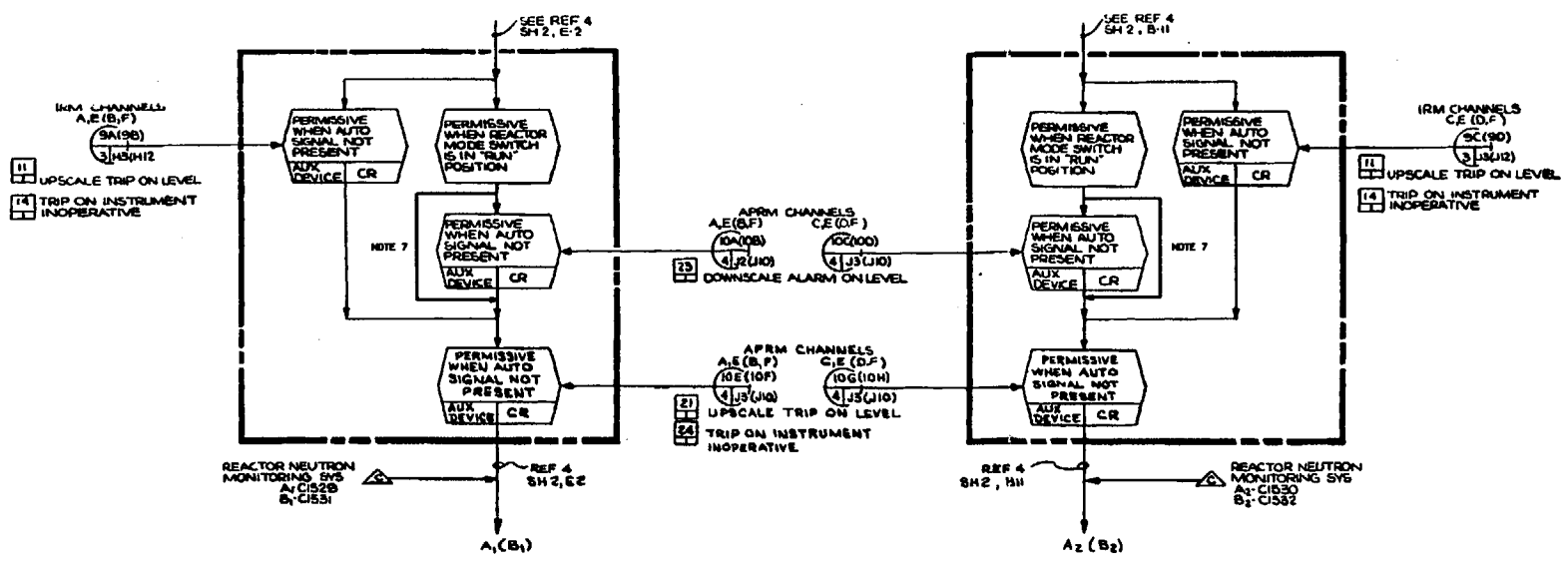

FIGURE 2
NEUTRON MONITORING SYSTEM TRIP
REACTOR PROTECTION SYSTEM TRIP SYSTEM A
(TYPICAL FOR TRIP SYSTEM B~)

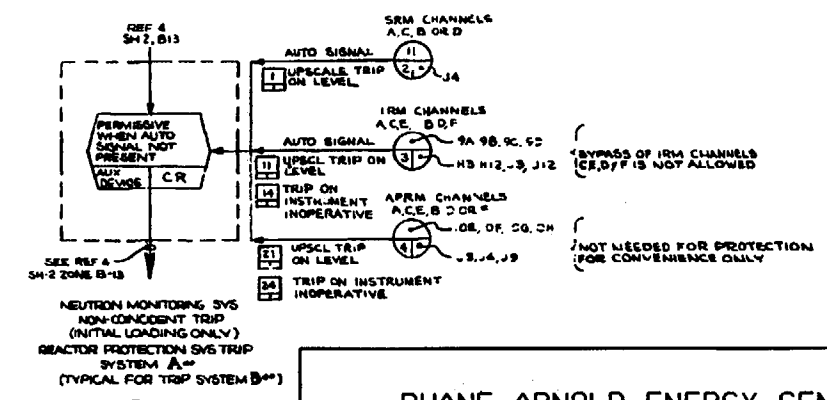

FIGURE 3

DUANE ARNOLD ENERGY CENTER
IES UTILITIES
UPDATED FINAL SAFETY ANALYSIS REPORT

NEUTRON MONITORING SYSTEM-FCD

FIGURE 7.6-5

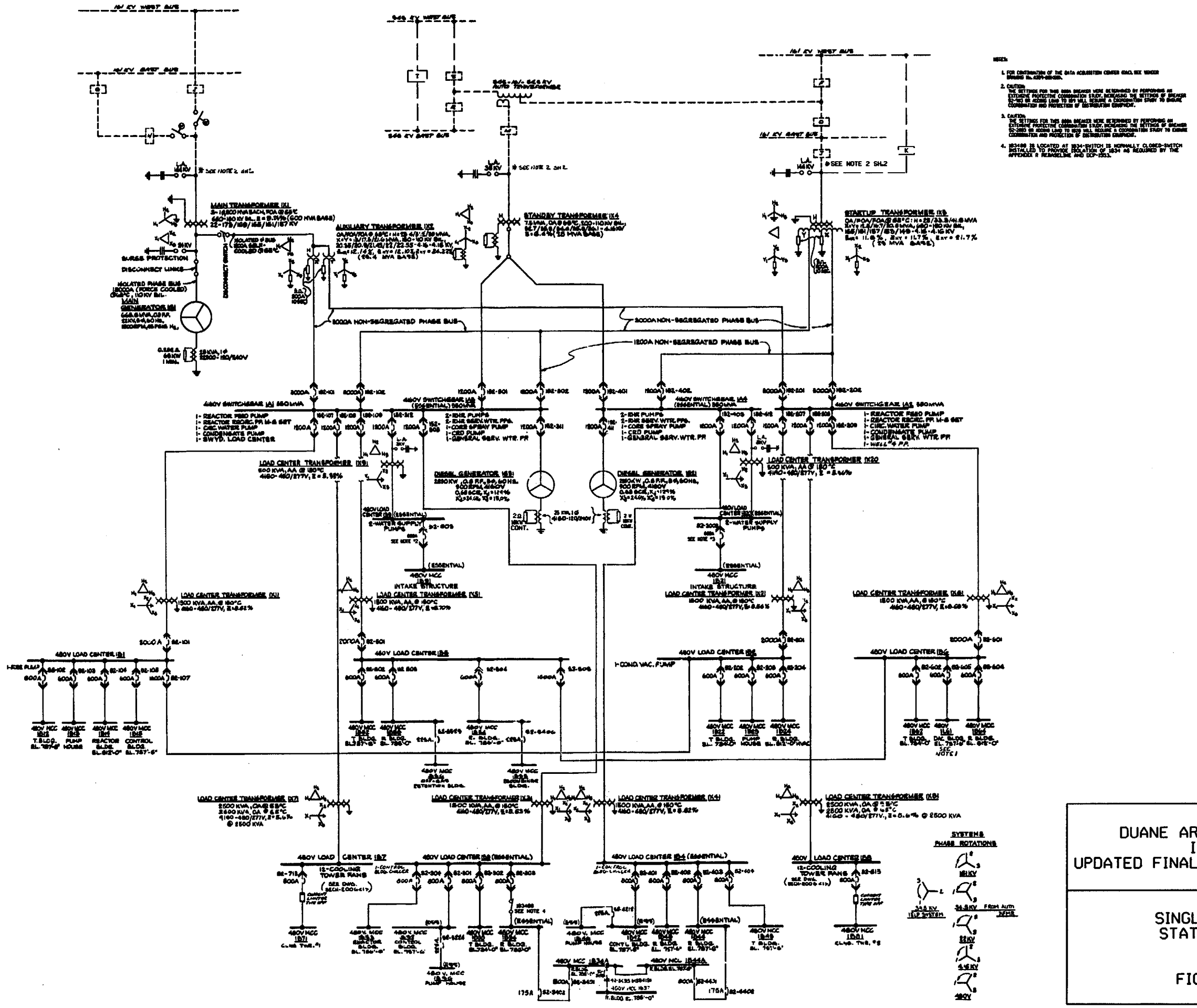

NOTES:

1. FOR CONFIRMATION OF THE DATA ACQUISITION CENTER (DAC), SEE VENDOR DRAWING No. 4287-000-001.
2. CAUTION:
   THE SETTINGS FOR THIS 480V BREAKER WERE DETERMINED BY PERFORMING AN EXTENSIVE PROTECTIVE COORDINATION STUDY. INCREASING THE SETTINGS OF BREAKER 52-1303 ON ADDING LOAD TO BUS 1A11 WILL REQUIRE A COORDINATION STUDY TO ENSURE COORDINATION AND PROTECTION OF DISTRIBUTION EQUIPMENT.
3. CAUTION:
   THE SETTINGS FOR THIS 480V BREAKER WERE DETERMINED BY PERFORMING AN EXTENSIVE PROTECTIVE COORDINATION STUDY. INCREASING THE SETTINGS OF BREAKER 52-2003 ON ADDING LOAD TO BUS 1A21 WILL REQUIRE A COORDINATION STUDY TO ENSURE COORDINATION AND PROTECTION OF DISTRIBUTION EQUIPMENT.
4. 1B3488 IS LOCATED AT 1B34-SWITCH IS NORMALLY CLOSED-SWITCH INSTALLED TO PROVIDE ISOLATION OF 1B34 AS REQUIRED BY THE APPENDIX R REBASELINE AND DCP-2833.

DUANE ARNOLD ENERGY CENTER
IES UTILITIES
UPDATED FINAL SAFETY ANALYSIS REPORT

SINGLE LINE DIAGRAM
STATION CONNECTIONS

FIGURE 8.3-1 SH. 1

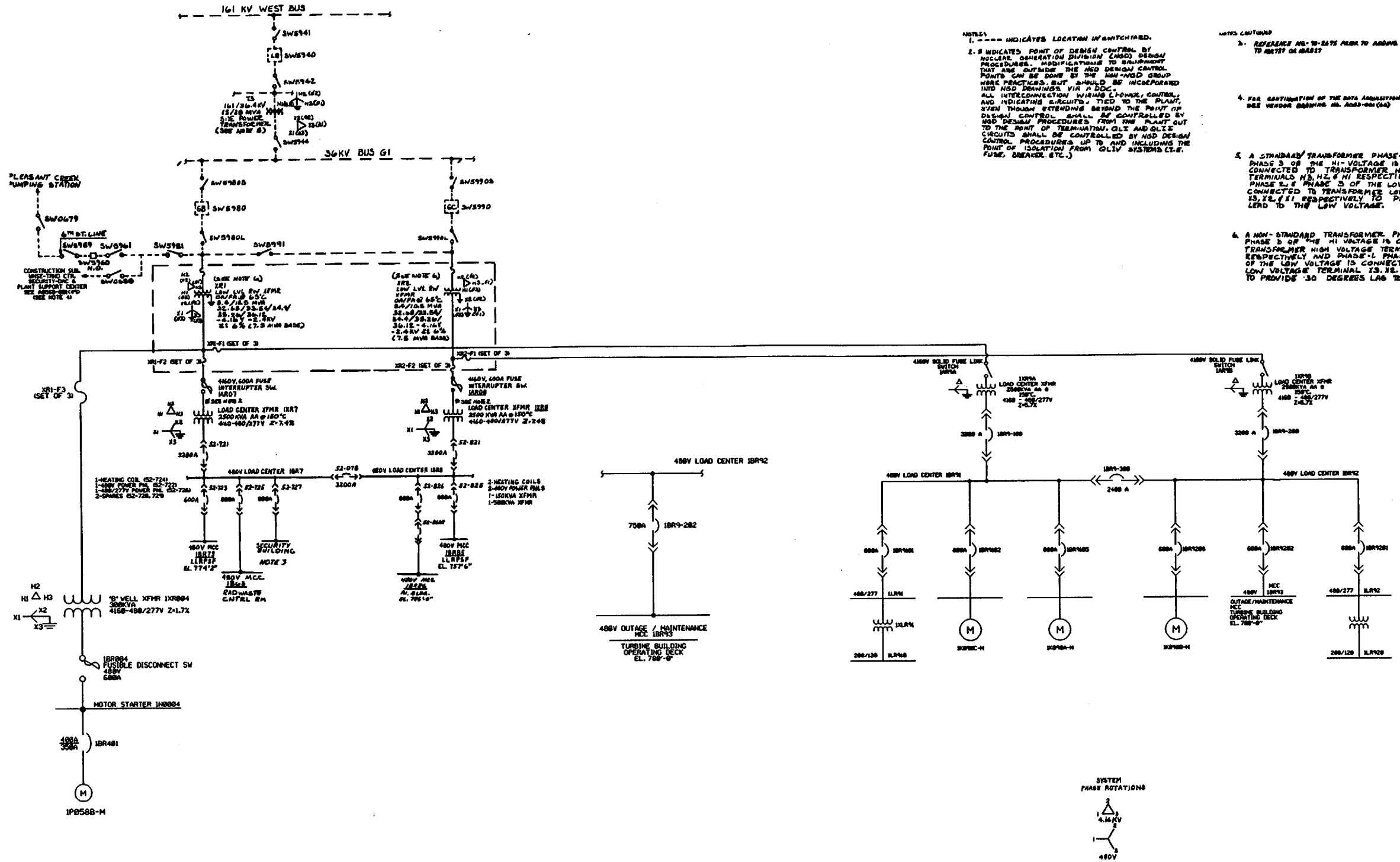

NOTES:
1. ---- INDICATES LOCATION IN SWITCHYARD.
2. S INDICATES POINT OF DESIGN CONTROL BY NUCLEAR GENERATION DIVISION (NGD) DESIGN PROCEDURES. MODIFICATIONS TO EQUIPMENT THAT ARE OUTSIDE THE NGD DESIGN CONTROL POINTS CAN BE DONE BY THE NAN-NGD GROUP WORK PRACTICES, BUT SHOULD BE INCORPORATED INTO NGD DRAWINGS VIA A DCR. ALL INTERCONNECTION WIRING (POWER, CONTROL, AND INDICATING CIRCUITS) TIED TO THE PLANT, EVEN THOUGH EXTENDING BEYOND THE POINT OF DESIGN CONTROL, SHALL BE CONTROLLED BY NGD DESIGN PROCEDURES FROM THE PLANT OUT TO THE POINT OF TERMINATION. OLY AND OLIX CIRCUITS SHALL BE CONTROLLED BY NGD DESIGN CONTROL PROCEDURES UP TO AND INCLUDING THE POINT OF ISOLATION FROM OLIV SYSTEMS (I.E. FUSE, BREAKER, ETC.)

NOTES CONTINUED
3. REFERENCE NG-78-2696 FOR TO AROUND LOADS TO 1BR797 OR 1BR817
4. FOR CONTINUATION OF THE DATA ACQUISITION CENTER (DAC), SEE VENDOR DRAWING NO. A060-001 (6A)
5. A STANDARD TRANSFORMER PHASE-1, PHASE-2, AND PHASE 3 OF THE HI-VOLTAGE IS CONNECTED TO CONNECTED TO TRANSFORMER HIGH VOLTAGE TERMINALS H3, H2, & H1 RESPECTIVELY & PHASE 1, PHASE 2, & PHASE 3 OF THE LOW VOLTAGE IS CONNECTED TO TRANSFORMER LOW VOLTAGE TERMINAL X3, X2, & X1 RESPECTIVELY TO PROVIDE 30 DEGREE LEAD TO THE LOW VOLTAGE.
6. A NON-STANDARD TRANSFORMER PHASE-1, PHASE-2, & PHASE 3 OF THE HI VOLTAGE IS CONNECTED TO TRANSFORMER HIGH VOLTAGE TERMINALS H3, H2, & H1 RESPECTIVELY AND PHASE-1, PHASE-2, AND PHASE-3 OF THE LOW VOLTAGE IS CONNECTED TO TRANSFORMER LOW VOLTAGE TERMINAL X3, X2, & X1 RESPECTIVELY TO PROVIDE 30 DEGREES LAG TO THE LOW VOLTAGE.

DUANE ARNOLD ENERGY CENTER
IES UTILITIES
UPDATED FINAL SAFETY ANALYSIS REPORT

SINGLE LINE DIAGRAM
STATION CONNECTIONS

FIGURE 8.3-1 SH. 2

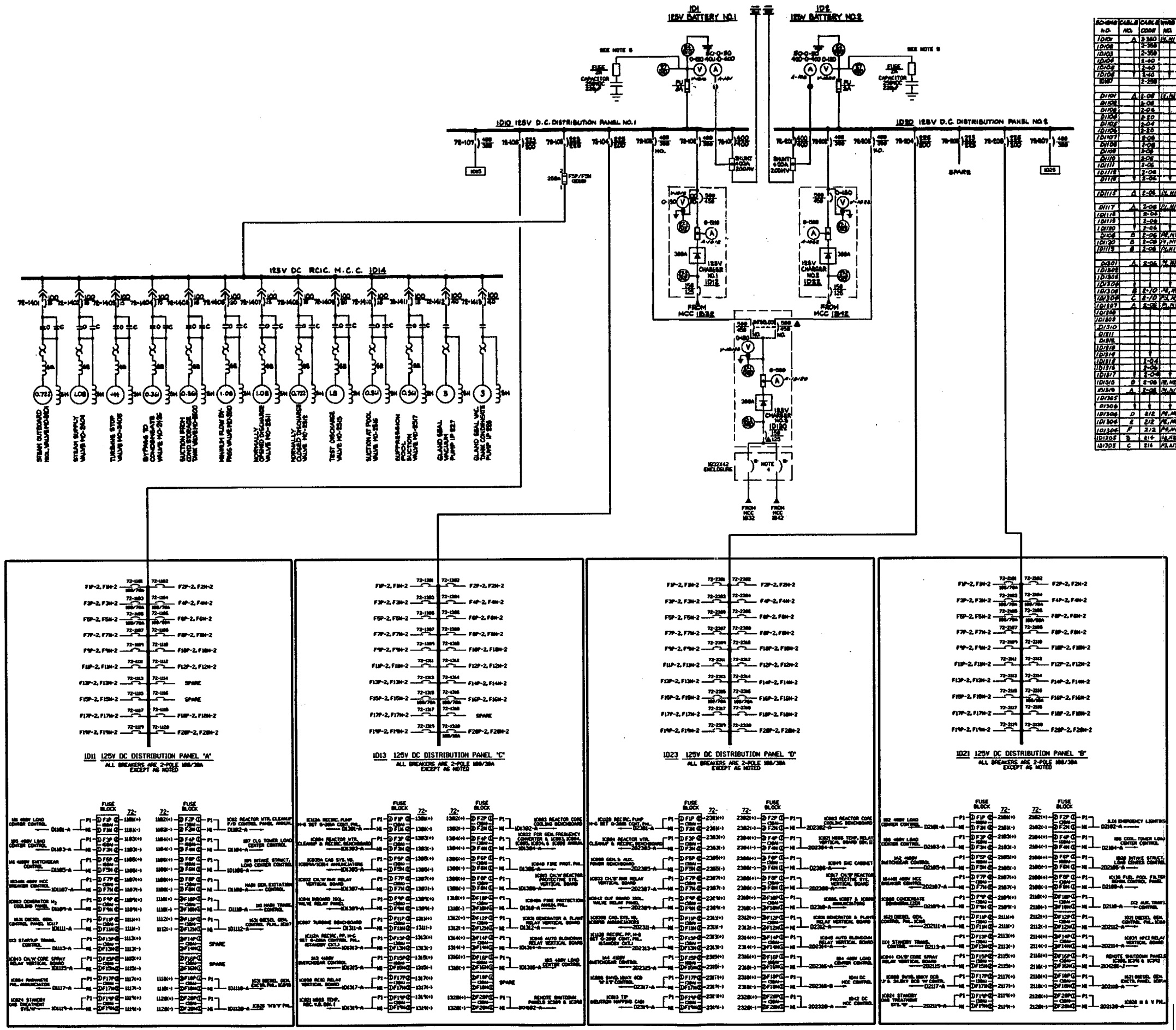

SCHEM NO.	CABLE NO.	CABLE CODE NO.	WIRE NO.	LOCATIONS FROM	TO
1D101	A	2-350	IR,NI	1D10	1DL
1D102		2-350			1D12
1D103		2-350			1D1A2
1D104		2-40			1D14
1D105		2-40			1D14
1D106		2-40			1D11
1D107		2-250			1D15
D1101	A	2-06	IR,NI	1D11	1B1
D1102		2-06			1C6A
D1103		2-06			1B2
D1104		2-20			1B3
D1105		2-04			1A1D1
D1106		2-20			1B11
D1107		2-06			1B1D1
D1108		2-06			1B1D1
D1109		2-06			1C3A
D1110		2-06			1-1B
D1111		2-06			1C17
D1112		2-06			1B1D2
D1113		2-06			1B4
D1114	A	2-06	IR,NI	1B11	1C4A
D1117	A	2-06	IR,NI	1B1	1C6A
1D1118		2-04			1C6A
1D1119		2-06			1C3A
1D1120		2-06			1C3A
D1121	B	2-06	PR,NR	1B1D2	1B1D2
1D1122	B	2-06	PI,NI	1C6A	1C6A
1D1123	B	2-06	PI,NI	1C3A	1C3B
D1301	A	2-06	PI,NI	1D13	1C11A
1D1302					1C6A
1D1303					1C6A
1D1304	B	2-10	PR,NR	1C6A	1C6A
1D1305	C	2-10	PR,NR	1A1A	1C6A
1D1307	A	2-06	PI,NI	1B1A	1C6A
1D1308					1C6A
1D1309					1C6A
1D1310					1C6A
D1311					1C6A
D1312					1C6A
1D1313					1C11B
1D1314					1C4A
1D1315		2-04			1A1A
1D1316		2-06			1A1A
1D1317		2-04			1C5A
1D1318	B	2-06	IR,NR	1A1B1A	1A3A
1D1319	A	2-06	PI,NI	1D13	1C3A
1D1365					1C1A
D1306					1C1B
1D1306	D	212	PR,NR	1C6A	1C6A
1D1306	E	212	PR,NR	1C6A	1C6A
1D1306	F	212	PR,NR	1C6A	1C6A
1D1302	B	214	PI,NI	1C6A	1C6A
1D1303	C	214	PI,NI	1C6A	1C6A

SCHEM NO.	CABLE NO.	CABLE CODE NO.	WIRE NO.	LOCATIONS FROM	TO
2D201	A	2-350	IR,NI	1D12	1DL
2D202		2-350			1D12
2D203		2-350			1D1A2
2D204		2-40			1D14
2D205					1D14
2D206		2-40			1D11
2D207		2-250			1D15
D2101	A	2-06	IR,NI	1D11	1B1
D2102		2-06			1A1D1
D2103		2-06			1B1
D2104		2-20			1B2
D2105		2-06			1A1B
2D1204		2-20			1B11
2D1207		2-06			1B1D2
D2108		2-06			1C1B
D2109					1C3A
D2110					1-1B
2D2111					1C11B
2D2112					1C3A
2D2113					1B4
2D2114					1C4A
D2115	A	2-06	PI,NI	1D21	1D2A
2D2116					1C3A
2D2117					1C3A
2D2118					1D2A
D2117	A	2-06	PI,NI	1D21	1D2A
2D2118		2-06			1C3A
2D2119		2-06			1C6A
2D2120		2-06			1C6A
D2121	B	2-10	PR,NR	1D1D2	1D1D2
D2122	B	2-06	PI,NI	1C6A	1C6A
2D2123	B	2-06	PI,NI	1C3A	1C3A
2D2124	B	2-06	PI,NI	1C3A	1C3B
D2301	A	2-06	PI,NI	1D23	1C11A
2D2302					1C6A
2D2303					1C6A
2D2304					1C6A
2D2305					1C6A
D2306					1C6A
2D2307					1C6A
2D2308					1C6A
2D2309					1C6A
D2310					1C6A
D2311					1C6A
D2312					1C11B
2D2313					1C11A
2D2314					1C4A
2D2315		2-04			1A1A
2D2316		2-06			1A1A
2D2317		2-04			1C6A
2D2318	B	2-386			1D1A1
D2319	A	2-06			1C1B
2D2320	A	2-386	PI,NI	1D1A2	1D1A2
2D2321	B	2-06	PR,NR	1A1A	1D1C
2DH1201	A	2-10	PI,NI	1D1A1	1C1A1
2DH1202	A	214	PI,NI	1D1C20	1C3B1
2DH2201	A	214	PI,NI	1D2C16	1C3B1
D2310	A	2-06	PI,NI	1C6A	1C6A
D2319	C	2-10	PI,NI	1D1C2	1C6A
2D2311	B	214	PR,NR	1C6B	1D1C2

NOTE

1. DEVICES AND CIRCUITS OF DIVISIONS I SHALL BE ISOLATED FROM THOSE OF DIVISION II, SHOWN IN THE ABOVE TABLE.
2. DISTRIBUTION PANELS 1D11 & 1D13 ARE LOCATED IN ESSENTIAL SWGR ROOM DIV.I, ELEVATION 707'-6". PANELS 1D21 & 1D23 ARE LOCATED IN DIV. II ESSENTIAL SWGR ROOM.
3. ▲ INDICATES CABLE IS TO BE T46659. SEE E-516 PARAGRAPH 3.3 E.
4. BREAKERS IN 1B32X42, MECHANICALLY INTERLOCKED TO PREVENT SIMULTANEOUS CLOSURE.
5. CAPICITOR AND FUSE ARE INSTALLED ON BOTH (+) AND (-) BUSES
6. FUSES ADDED TO 1D18, 1D11, 1D13, 1D21, AND 1D23 PER ECP-1554.
7. FOR FUSE TYPE AND SIZE SEE FUSE CONTROL DRAWING LIST BECH-E014 FOR PANELS 1D18, 1D11, 1D13, 1D21, AND 1D23.

DUANE ARNOLD ENERGY CENTER
IES UTILITIES
UPDATED FINAL SAFETY ANALYSIS REPORT

SINGLE LINE METER AND RELAY DIAGRAM
125 VDC

FIGURE 8.3-6

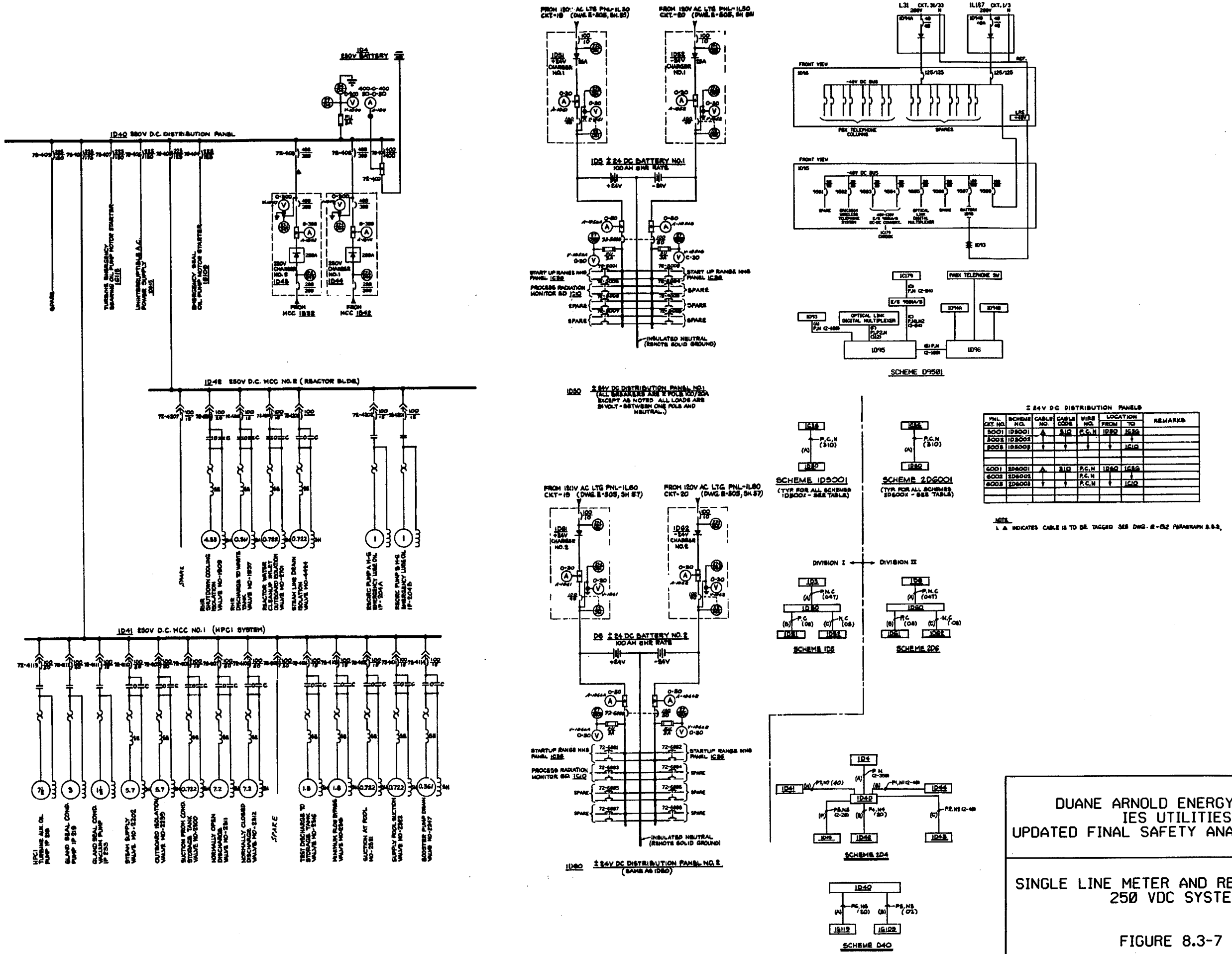

± 24V DC DISTRIBUTION PANELS							
PNL. CKT. NO.	SCHEME NO.	CABLE NO.	CABLE CODE	WIRE NO.	LOCATION FROM	LOCATION TO	REMARKS
5001	1D9001	▲		810	P.C.N	1D80	1C30	
5002	1D5002							
5003	1D5003					1C10		
6001	2D6001	▲		810	P.C.N	1D80	1C30	
6002	2D6002				P.C.N			
6003	2D6003				P.C.N		1C10	

NOTE
1. ▲ INDICATES CABLE IS TO BE TAGGED SEE DWG. E-012 PARAGRAPH 5.5.2.

DUANE ARNOLD ENERGY CENTER
IES UTILITIES
UPDATED FINAL SAFETY ANALYSIS REPORT

SINGLE LINE METER AND RELAY DIAGRAM
250 VDC SYSTEM

FIGURE 8.3-7

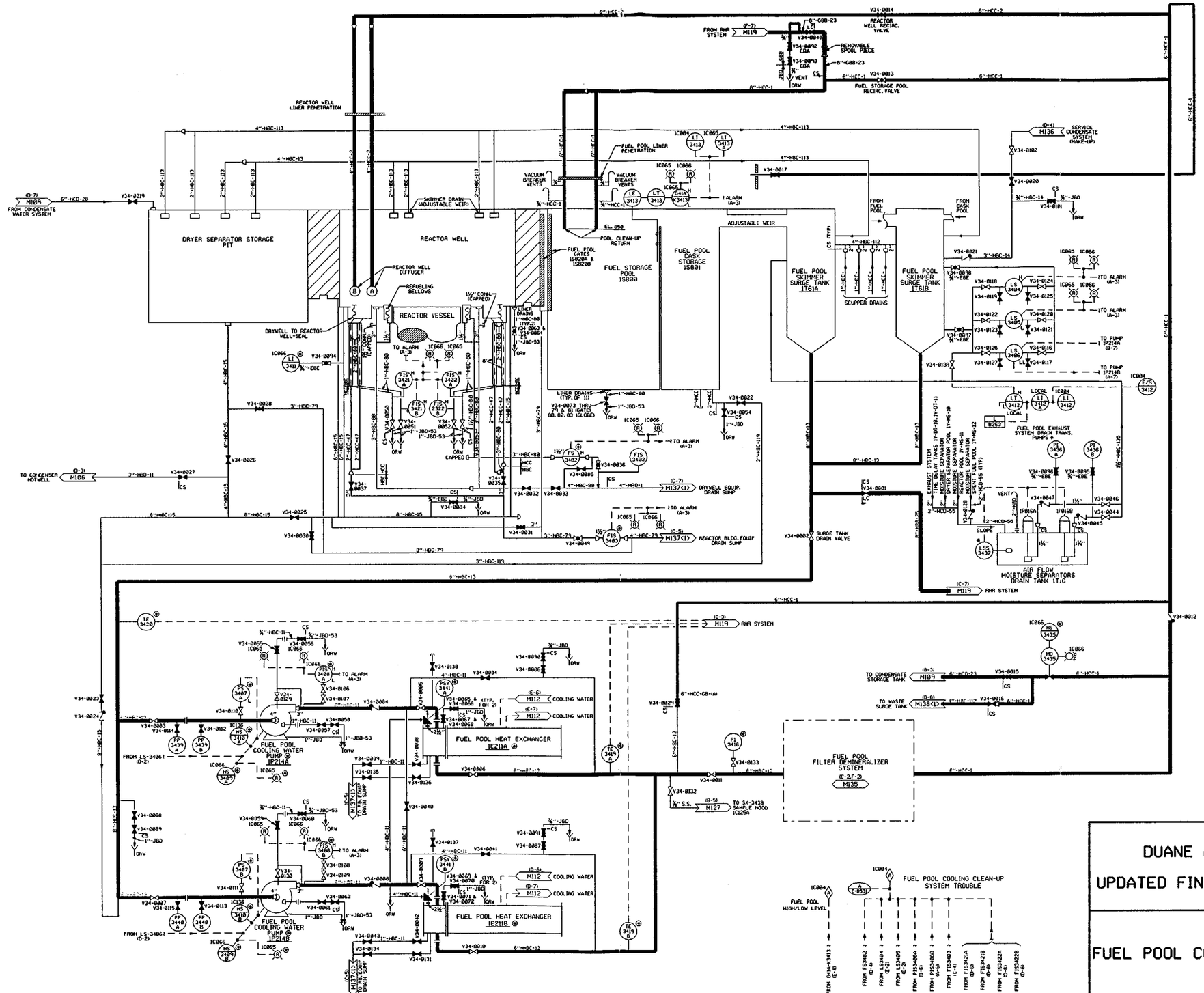

DUANE ARNOLD ENERGY CENTER
IES UTILITIES
UPDATED FINAL SAFETY ANALYSIS REPORT

P & ID
FUEL POOL COOLING AND CLEANUP SYSTEM

FIGURE 9.1-15

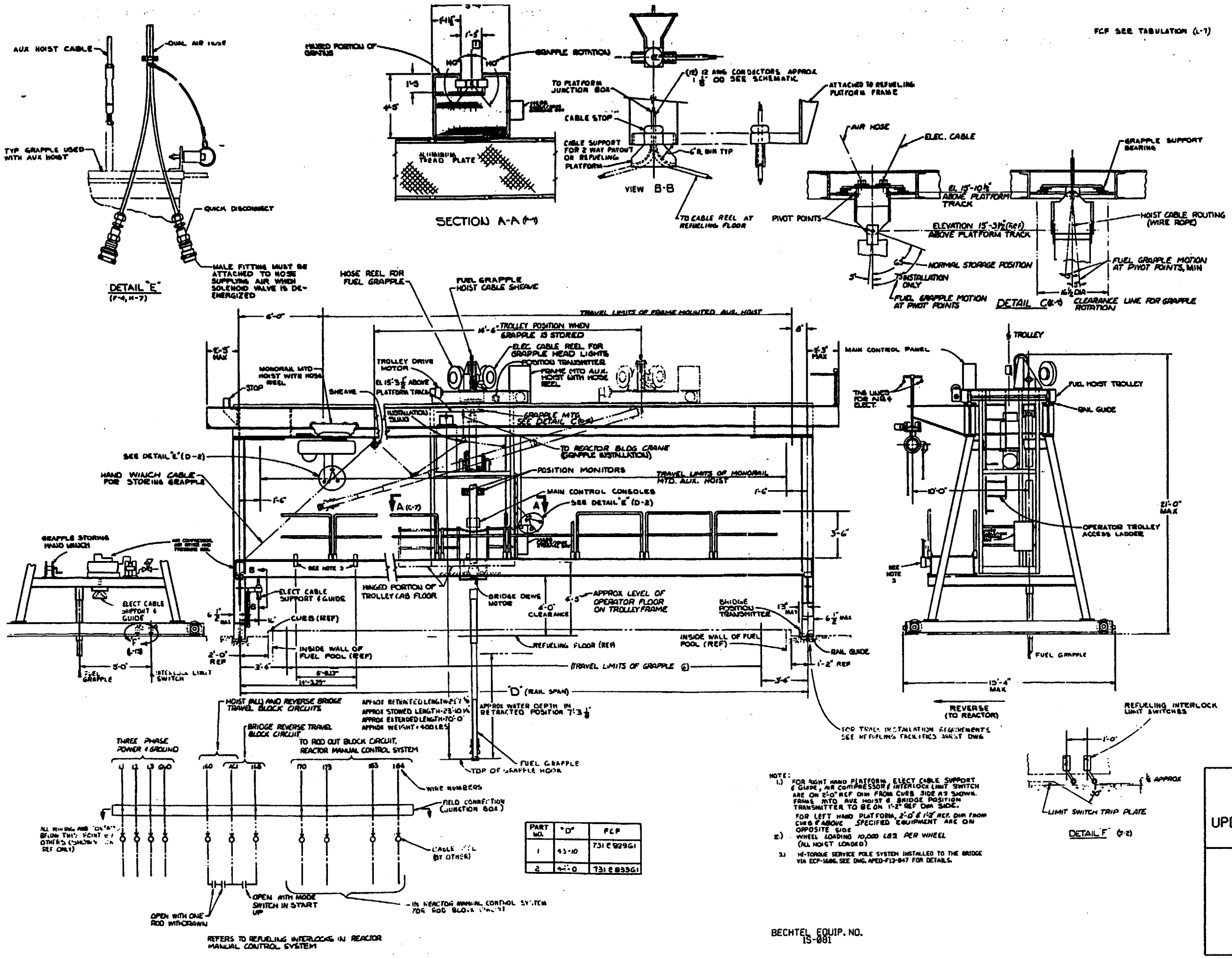

PART NO.	"D"	FCF
1	43'-10	731E929G1
2	44'-0	731E933G1

NOTE:
1.) FOR RIGHT HAND PLATFORM, ELECT CABLE SUPPORT & GUIDE, AIR COMPRESSOR & INTERLOCK LIMIT SWITCH ARE ON 2'-0" REF DIM FROM CURB SIDE AS SHOWN. FRAME MTD AUX HOIST & BRIDGE POSITION TRANSMITTER TO BE ON 1'-2" REF DIM SIDE.
FOR LEFT HAND PLATFORM, 2'-0" & 1'-2" REF. DIM FROM CURB & ABOVE SPECIFIED EQUIPMENT ARE ON OPPOSITE SIDE
2.) WHEEL LOADING 10,000 LBS PER WHEEL (ALL HOIST LOADED)
3.) HI-TORQUE SERVICE POLE SYSTEM INSTALLED TO THE BRIDGE VIA ECP-1686. SEE DWG. APED-F13-847 FOR DETAILS.

BECHTEL EQUIP. NO. 1S-081

DUANE ARNOLD ENERGY CENTER
IES UTILITIES
UPDATED FINAL SAFETY ANALYSIS REPORT

REFUELING PLATFORM

FIGURE 9.1-18

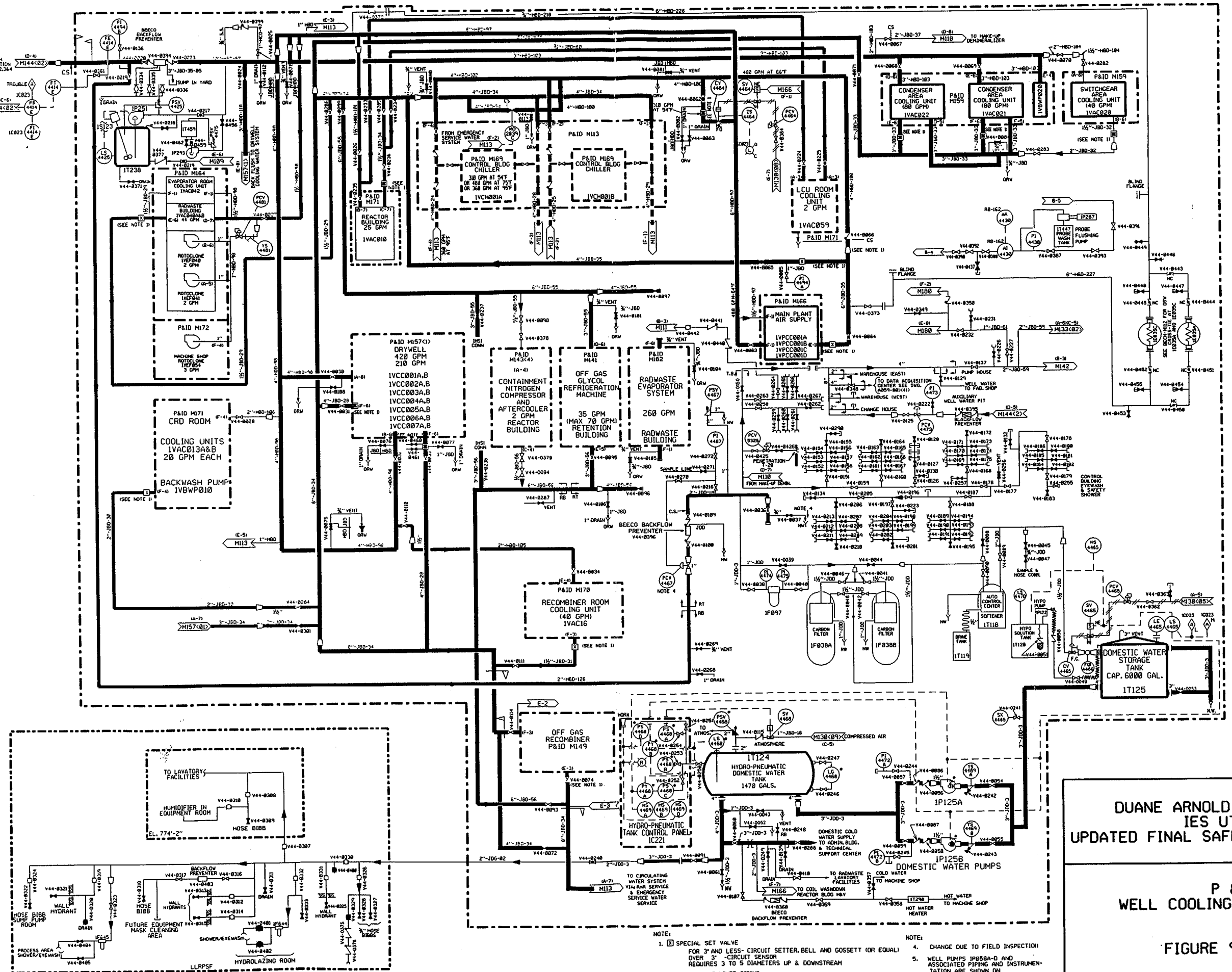

NOTE:

1. ⊠ SPECIAL SET VALVE
   FOR 3" AND LESS- CIRCUIT SETTER, BELL AND GOSSETT (OR EQUAL)
   OVER 3" -CIRCUIT SENSOR
   REQUIRES 3 TO 5 DIAMETERS UP & DOWNSTREAM
2. FLEXIBLE LINED PIPING
3. WHERE SEISMIC SYMBOL ⊢ APPEARS, PORTIONS OF LINES PASSING THROUGH ROOMS CONTAINING SAFEGUARD EQUIPMENT SHALL BE SEISMIC CLASS I

NOTE:

4. CHANGE DUE TO FIELD INSPECTION
5. WELL PUMPS 1P125A-D AND ASSOCIATED PIPING AND INSTRUMENTATION ARE SHOWN ON SHEET 2 OF M144.

DUANE ARNOLD ENERGY CENTER
IES UTILITIES
UPDATED FINAL SAFETY ANALYSIS REPORT

P & ID
WELL COOLING WATER SYSTEM

FIGURE 9.2-1 SH. 1

BECH-M144<1> REV. 44

REVISION 15 - 5/00

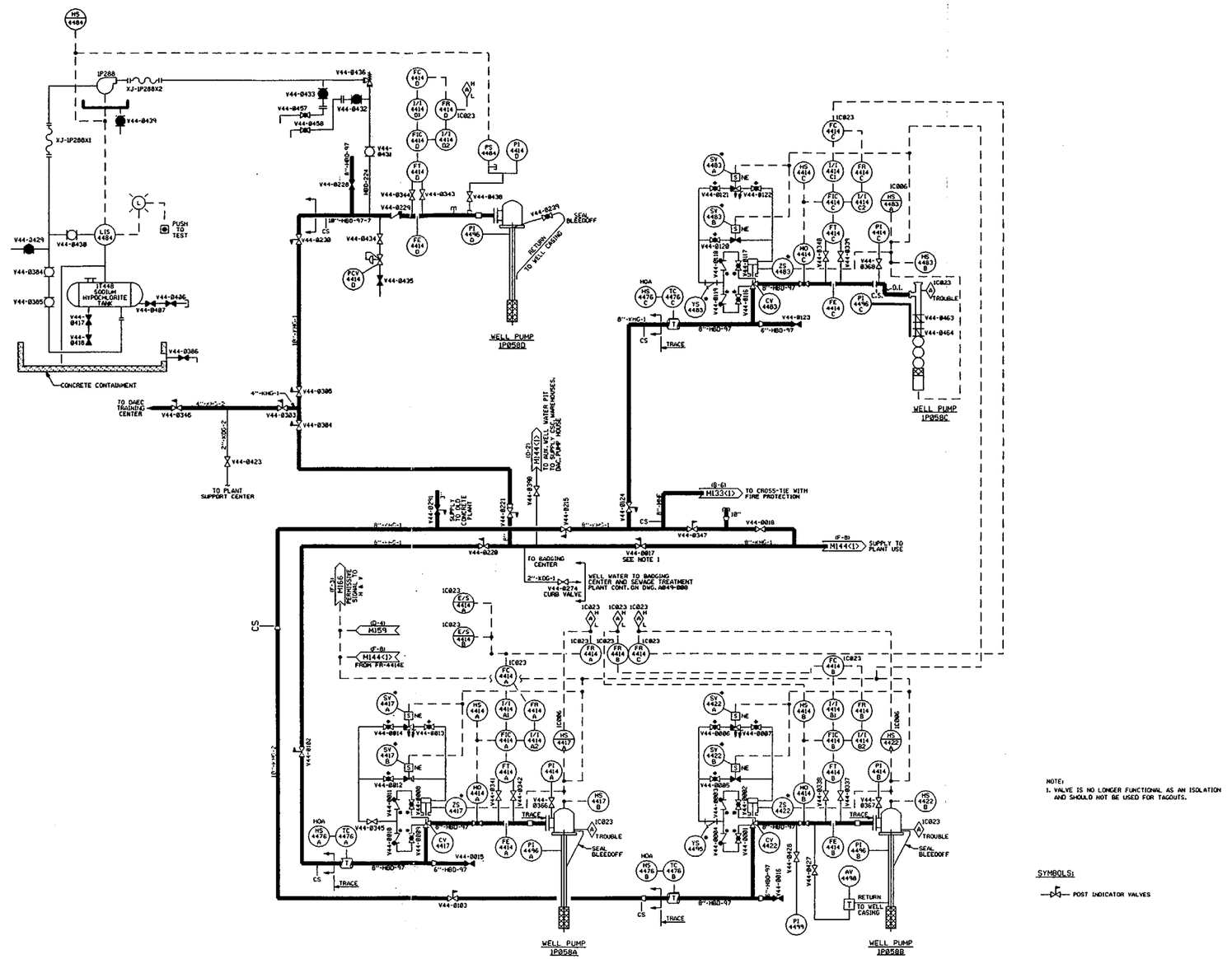

DUANE ARNOLD ENERGY CENTER
IES UTILITIES
UPDATED FINAL SAFETY ANALYSIS REPORT

P & ID
WELL WATER SYSTEM

FIGURE 9.2-1 SH. 2

BECH-M144<2> REV. 30

REVISION 15 - 5/00

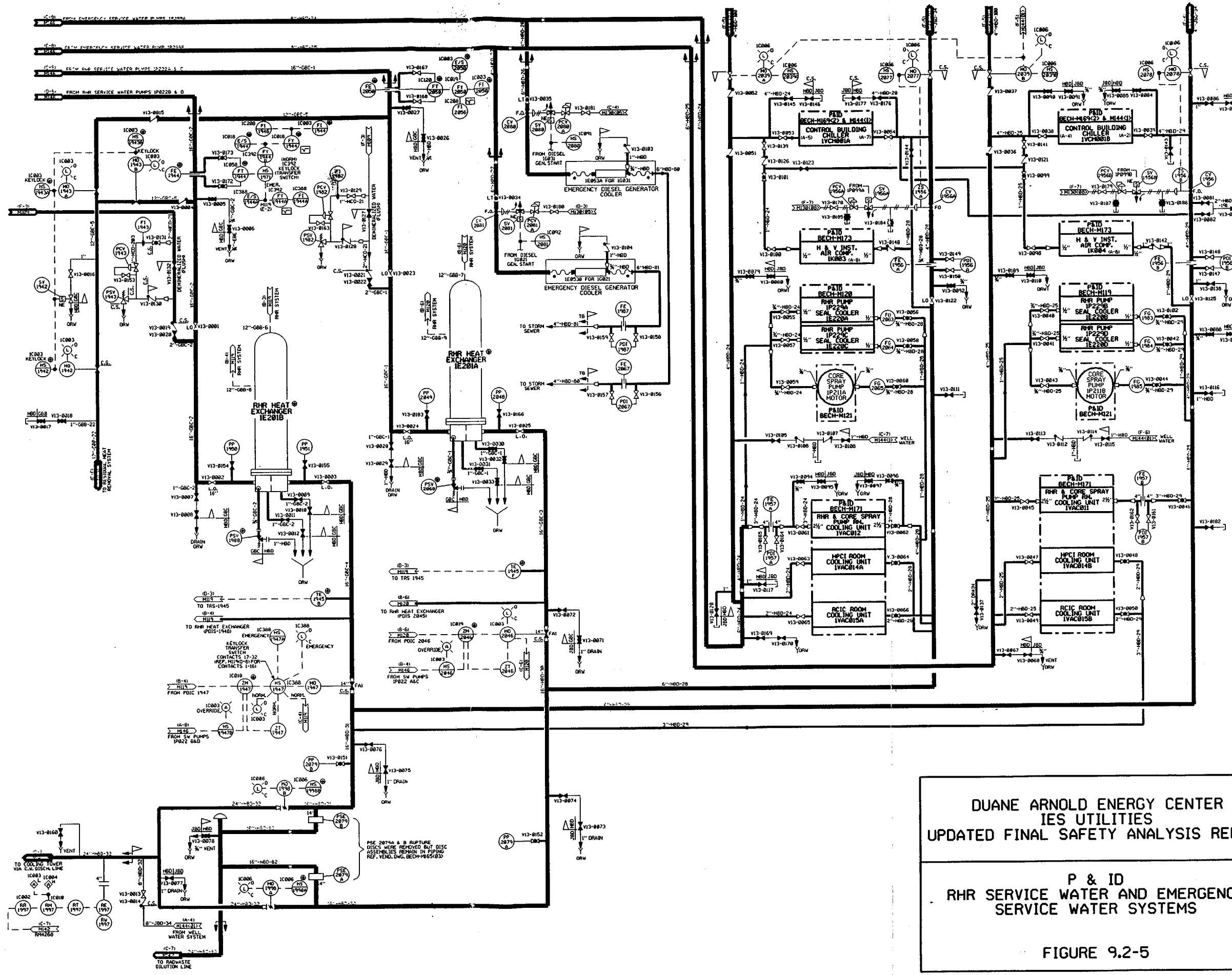

DUANE ARNOLD ENERGY CENTER
IES UTILITIES
UPDATED FINAL SAFETY ANALYSIS REPORT

P & ID
RHR SERVICE WATER AND EMERGENCY SERVICE WATER SYSTEMS

FIGURE 9.2-5

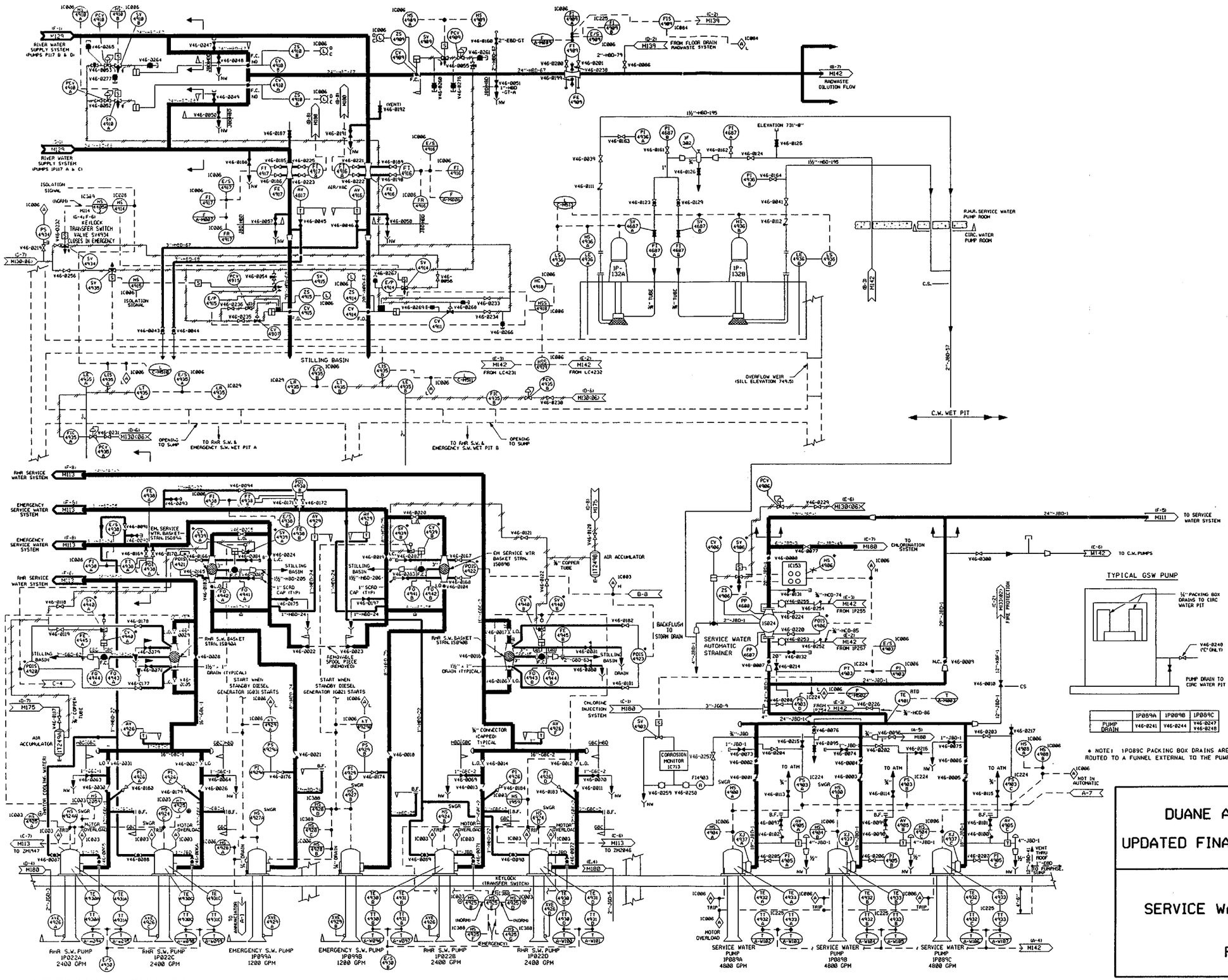

BECH-M146 REV. 63

DUANE ARNOLD ENERGY CENTER
IES UTILITIES
UPDATED FINAL SAFETY ANALYSIS REPORT

P & ID
SERVICE WATER SYSTEM PUMPHOUSE

FIGURE 9.2-6

REVISION 15 - 5/00

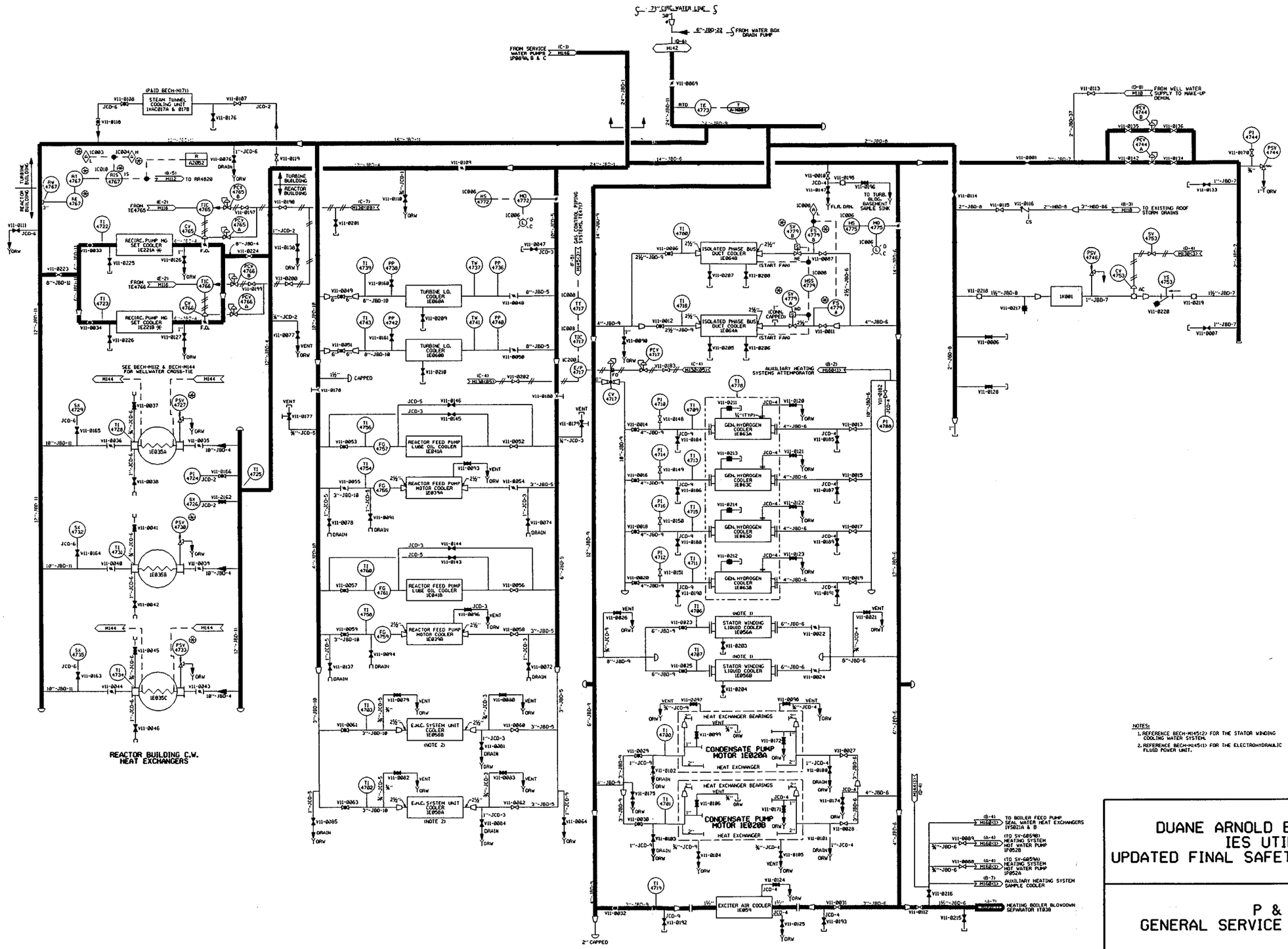

NOTES:

1. REFERENCE BECH-M145(2) FOR THE STATOR WINDING COOLING WATER SYSTEM.
2. REFERENCE BECH-M145(1) FOR THE ELECTROHYDRAULIC FLUID POWER UNIT.

DUANE ARNOLD ENERGY CENTER
IES UTILITIES
UPDATED FINAL SAFETY ANALYSIS REPORT

P & ID
GENERAL SERVICE WATER SYSTEMS

FIGURE 9.2-12

BECH-M111 REV. 60

REVISION 15 - 5/00

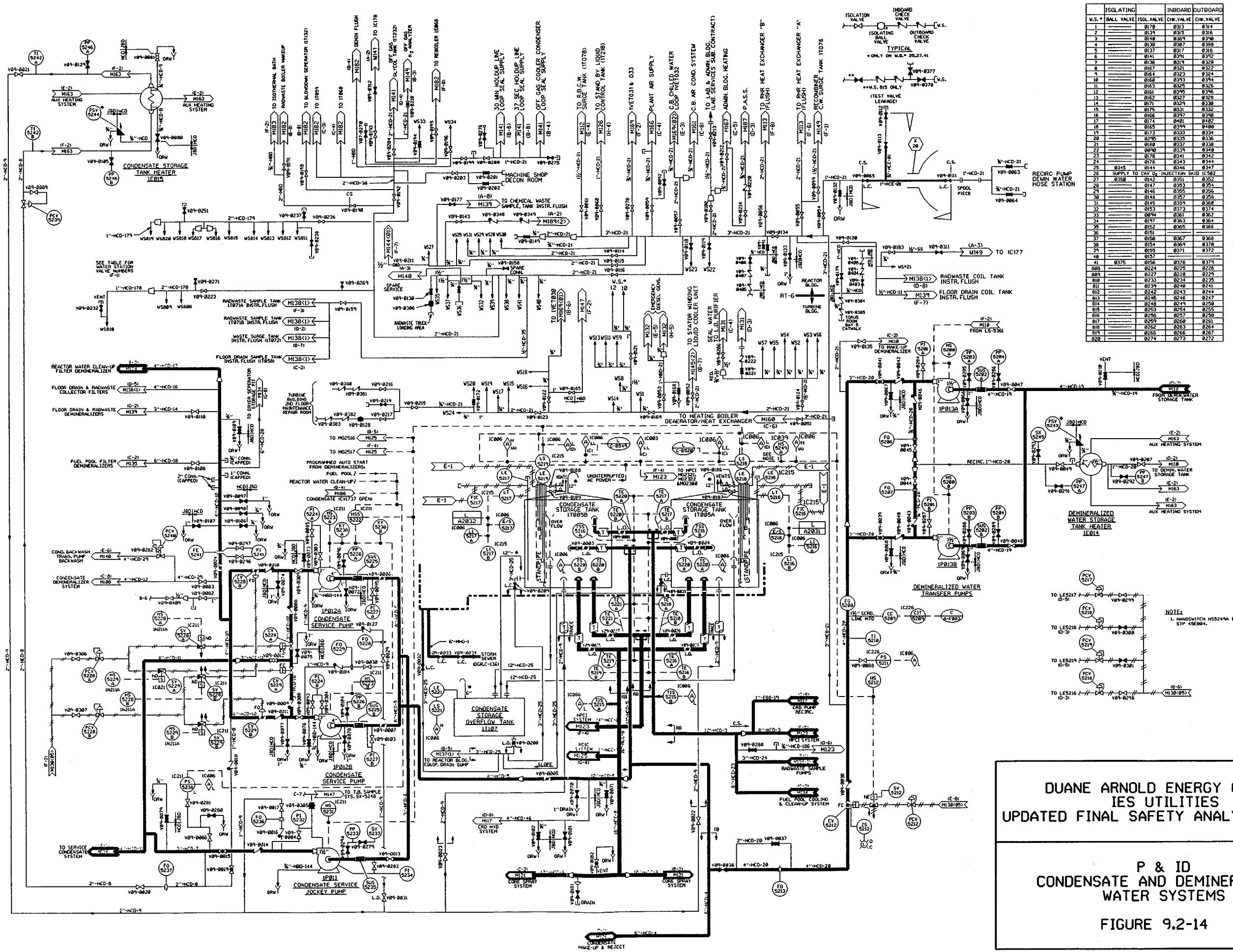

	ISOLATING		INBOARD	OUTBOARD
V.S. *	BALL VALVE	ISOL.VALVE	CHK.VALVE	CHK.VALVE
1		0178	0313	0314
2		0139	0315	0316
3		0149	0389	0390
4		0138	0387	0388
5		0137	0317	0318
6		0141	0391	0392
7		0136	0319	0320
8		0167	0321	0322
9		0164	0323	0324
10		0160	0393	0394
11		0163	0325	0326
12		0161	0395	0396
13		0162	0327	0328
14		0171	0329	0330
15		0175	0331	0332
16		0166	0397	0398
17		0174	0481	0482
18		0165	0399	0400
19		0173	0333	0334
20		0295	0335	0336
21		0169	0337	0338
22		0090	0339	0340
23		0178	0341	0342
24		0176	0343	0344
25	0345	0144	0346	0347
26	SUPPLY TO CAV O_2		INJECTION SKID	1C582
27	0358	0142	0351	0352
28		0147	0353	0354
29		0146	0355	0356
30		0149	0357	0358
31		0145	0359	0360
32		0153	0373	0374
33		0894	0361	0362
34		0197	0363	0364
35		0152	0365	0366
36		0151		
37		0150	0367	0368
38		0154	0369	0370
39		0155	0371	0372
40		0157		
41	0375	0156	0376	0379
808		0224	0225	0226
809		0227	0228	0229
810		0233	0234	0235
811		0239	0240	0241
812		0242	0243	0244
813		0245	0246	0247
814		0248	0249	0250
815		0253	0254	0255
816		0256	0257	0258
817		0259	0260	0261
818		0262	0263	0264
819		0265	0266	0267
820		0274	0273	0272

DUANE ARNOLD ENERGY CENTER
IES UTILITIES
UPDATED FINAL SAFETY ANALYSIS REPORT

P & ID
CONDENSATE AND DEMINERALIZED WATER SYSTEMS

FIGURE 9.2-14

NOTES:

1. TO COMMON TROUBLE ALARM AND TRIP ALARM ON 1C007. LOCAL LIGHTS INDICATE SPECIFIC TRIP CONDITION LIGHTS ON 1C007 INDICATE RUNNING STATUS.
2. UNDERGROUND PIPING CATHODICALLY PROTECTED. ISOLATING FLANGES INSTALLED AFTER ENTRY TO COMPRESSOR BLDG. & TURBINE BLDG.
3. DRAWING INDEX
   M130<1> HAS BEEN REDRAWN ON M130<3> AND <9>
   M130<2> HAS BEEN REDRAWN ON M130<5>,<6>,<7> AND <8>
   M130<3> HAS BEEN REDRAWN ON M130<4>
   M130<4> HAS BEEN REDRAWN ON M130<1>,<2> AND <3>
   M130<5> HAS BEEN REDRAWN ON M130<1>

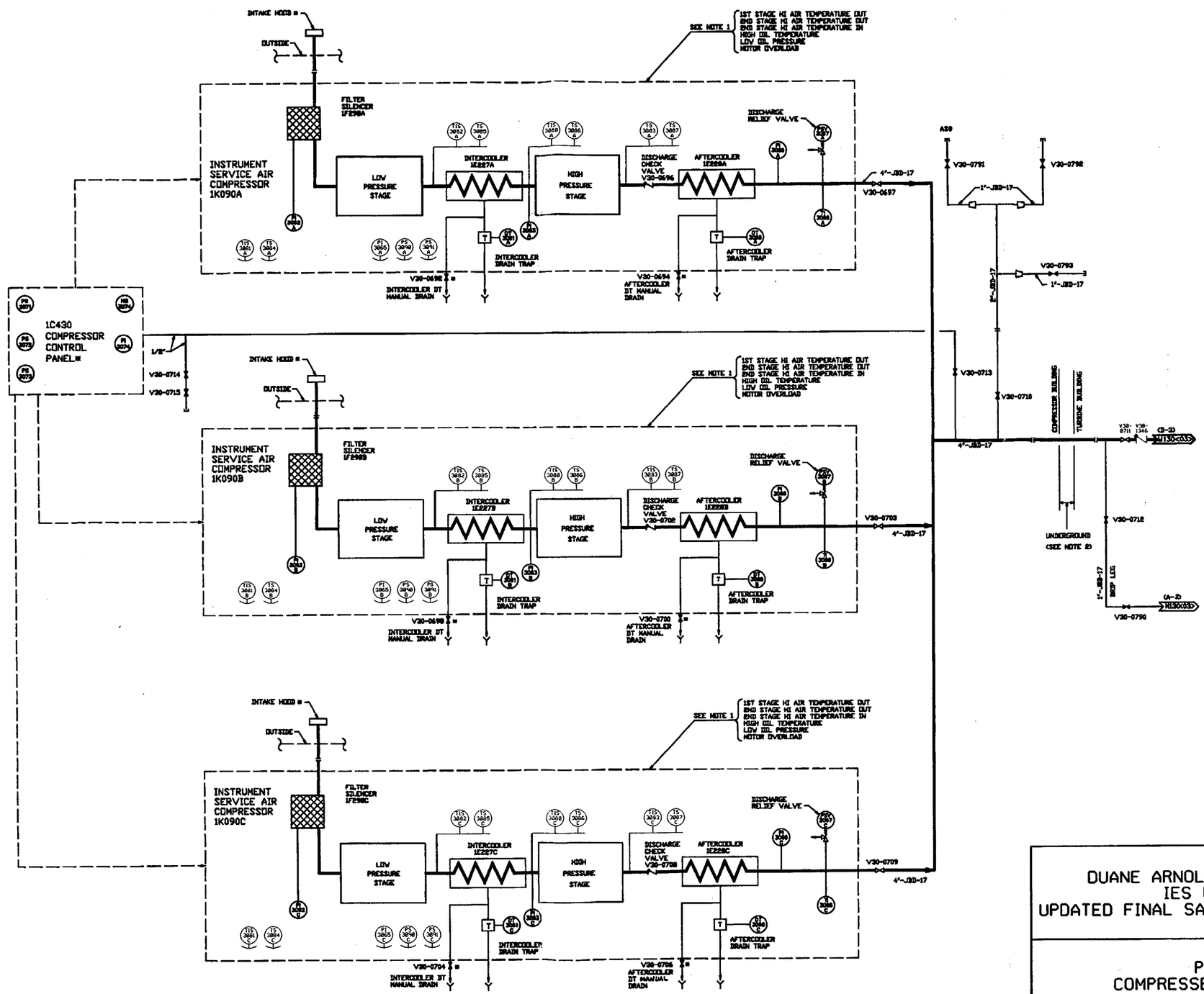

DUANE ARNOLD ENERGY CENTER
IES UTILITIES
UPDATED FINAL SAFETY ANALYSIS REPORT

P & ID
COMPRESSED AIR SYSTEM

FIGURE 9.3-1 SH. 2

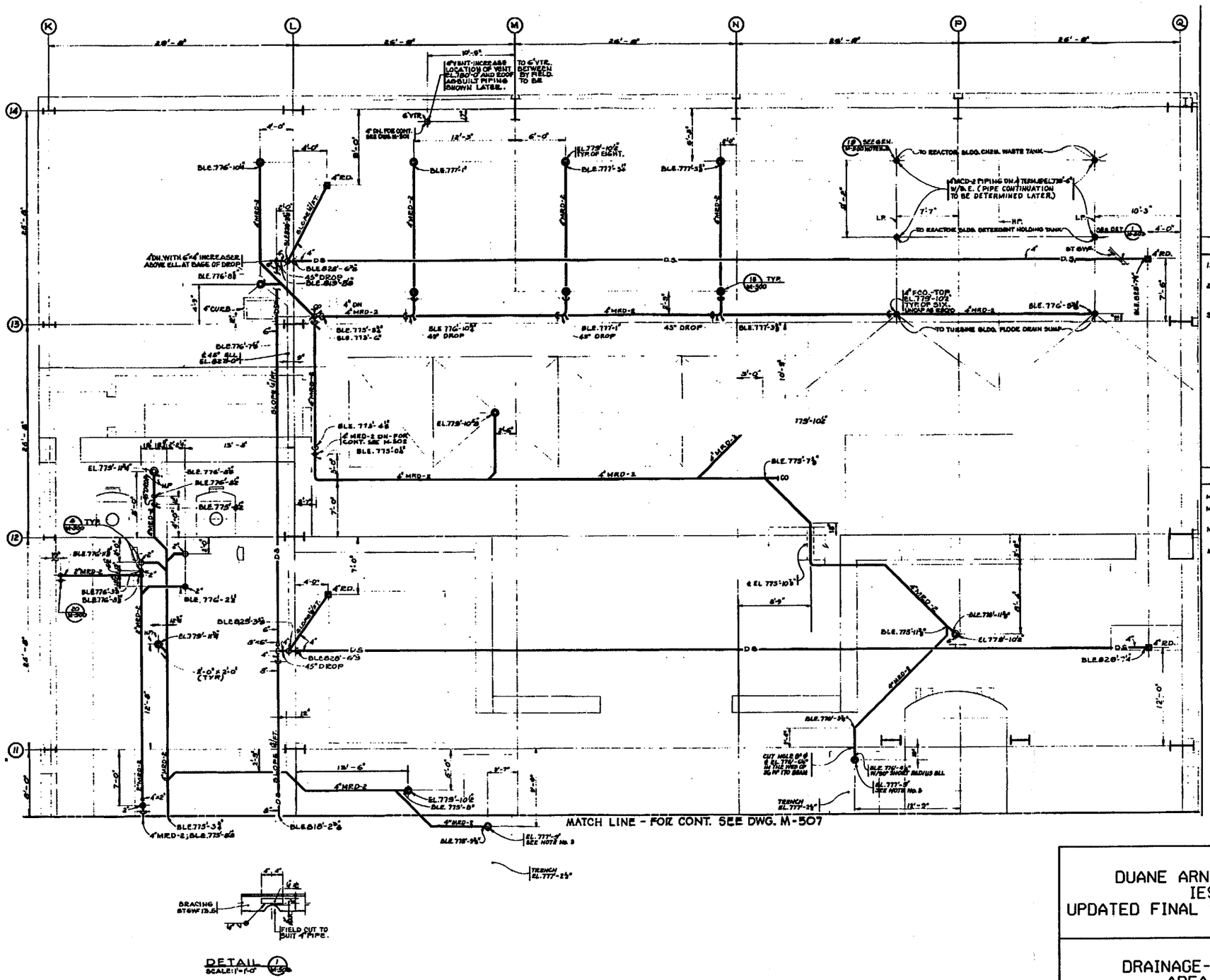

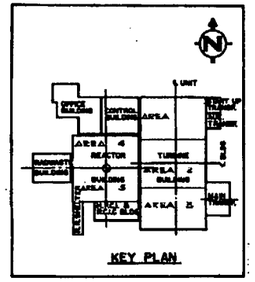

GENERAL NOTES

1. FOR TYPICAL DETAILS AND LEGEND SEE DWG. No. M-500
2. 6"-FCD'S IN WASHDOWN AREA: ALL STAINLESS STEEL TYPE 304. ZURN INDUSTRIES, INC. No. Z-1580-2-76.
3. PROVIDE HOLE 9"ø ON LINE ℄ OF TRENCH AND WELD FD. TO LINER ℄.

REFERENCE DRAWINGS.

M-500 DRAINAGE DETAILS AND LEGEND.
M-507 DRAINAGE TURBINE BLDG.-AREA No.2 PLAN AT EL. 780'-0"
M-502. DRAINAGE TURBINE BLDG.-AREA No.1 PLAN AT EL. 757'-6".
M-501 DRAINAGE-TURBINE BLDG.-AREA No.1 PLAN AT EL. 734'-0"

DUANE ARNOLD ENERGY CENTER
IES UTILITIES
UPDATED FINAL SAFETY ANALYSIS REPORT

DRAINAGE-TURBINE BUILDING-
AREA No. 1 AT 780'

FIGURE 9.3-5

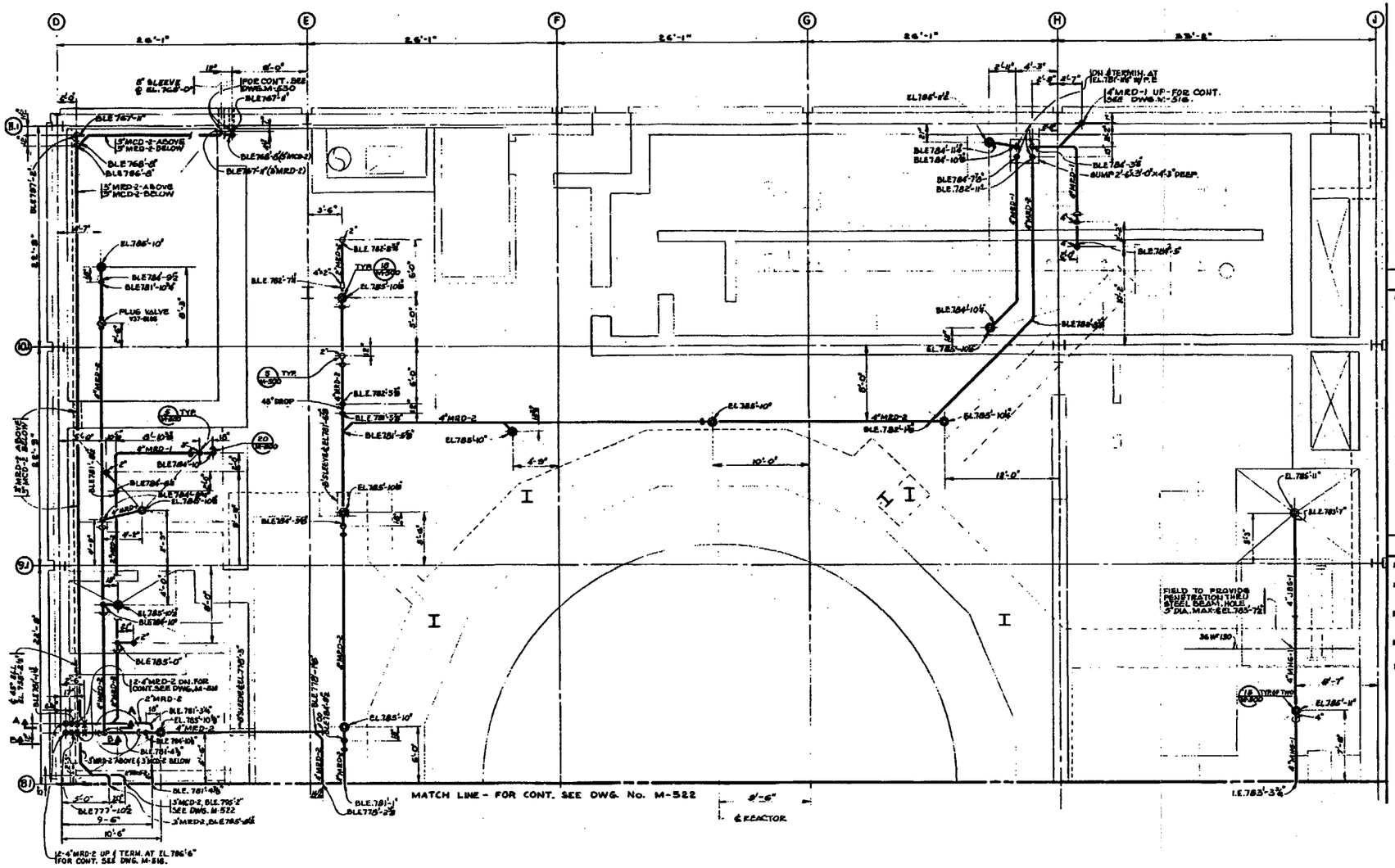

GENERAL NOTES

1. FOR TYPICAL DETAILS AND LEGEND SEE DWG. No. M-500

REFERENCE DRAWINGS

M-500	DRAINAGE DETAILS AND LEGEND
M-518	DRAINAGE-REACTOR BLDG. AREA # 4 PLAN AT EL. 818'-0".
M-522	DRAINAGE-REACTOR BLDG. AREA # 5 PLAN AT EL. 786'-0".
M-514	DRAINAGE-REACTOR BLDG. AREA #4 PLAN AT EL. 757'-6".
M-530	DRAINAGE ADMINISTRATION BLDG. PLAN AT EL. 757'-6".

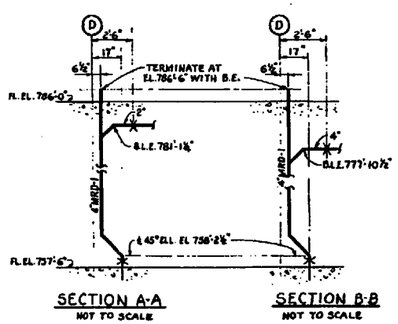

DUANE ARNOLD ENERGY CENTER
IES UTILITIES
UPDATED FINAL SAFETY ANALYSIS REPORT

DRAINAGE-REACTOR BUILDING-
AREA No. 4 AT 786'

FIGURE 9.3-14

REVISION 15 - 5/00

BECH-M515 REV. 3

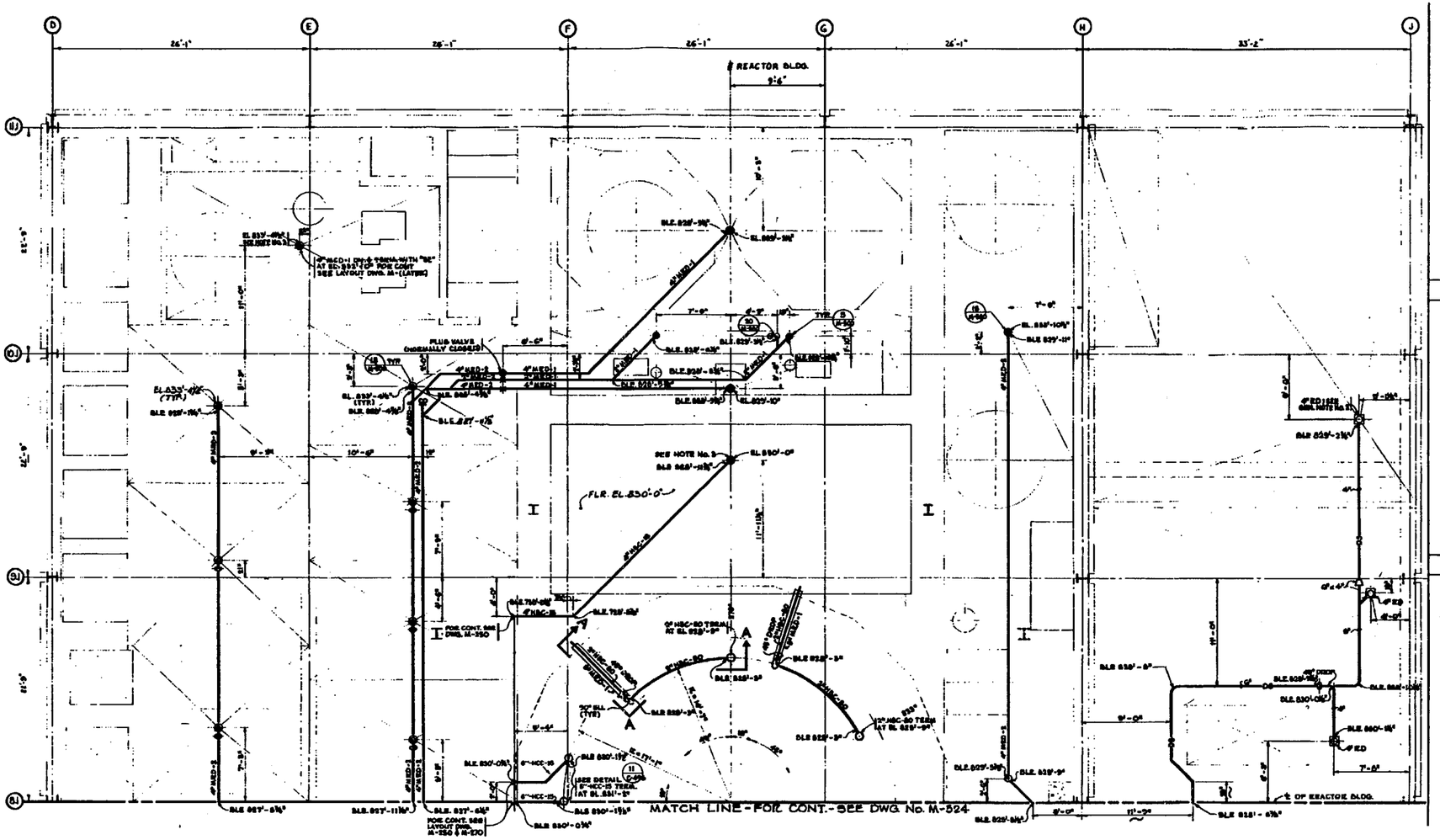

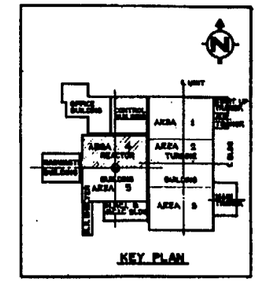

GENERAL NOTES

1. FOR TYPICAL DETAILS AND LEGEND SEE DWG. No. M-500
2. PROVIDE DECK CLAMP DEVICE IF NEEDED TO COMPLETE R.D. INSTALLATION.
3. FLOOR DRAIN SHALL BE STAINLESS STEEL (TYPE 306) W/CLOSURE PLUG AS MANUFACTURED BY:
   ZURN INDUSTRIES, INC. No. Z-540-76 OR JOSAM MANUFACTURING CO. No. 70210-QR-SS PURCHASE BY FIELD.

REFERENCE DRAWINGS

M-500 DRAINAGE DETAILS AND LEGEND

M-524 DRAINAGE - REACTOR BLDG. AREA 3 PLAN AT EL. 833'-6"

C-495 REACTOR BLDG. REACTOR WELL, SPENT FUEL & DRYER SEPARATOR POOL SECTIONS & DETAILS SH. 2.

M-250 AREA-4 PIPING PLAN BELOW EL. 833'-6"

M-270 AREA-3 PIPING PLAN BELOW EL. 833'-6"

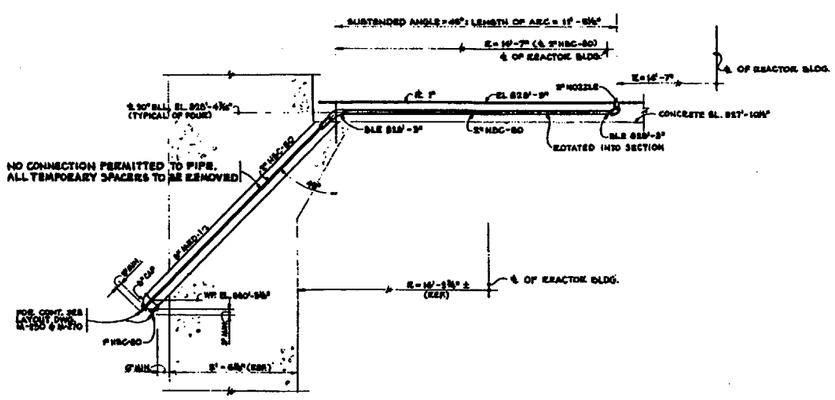

SECTION A-A-A

SCALE: 1/4" = 1'-0"

TYPICAL AT AZ. 45°, 135°, 270° & 333°

DUANE ARNOLD ENERGY CENTER
IES UTILITIES
UPDATED FINAL SAFETY ANALYSIS REPORT

DRAINAGE-REACTOR BUILDING-
AREA No. 4 AT 833'

FIGURE 9.3-16

REVISION 15 - 5/00

BECH-M517 REV. 4

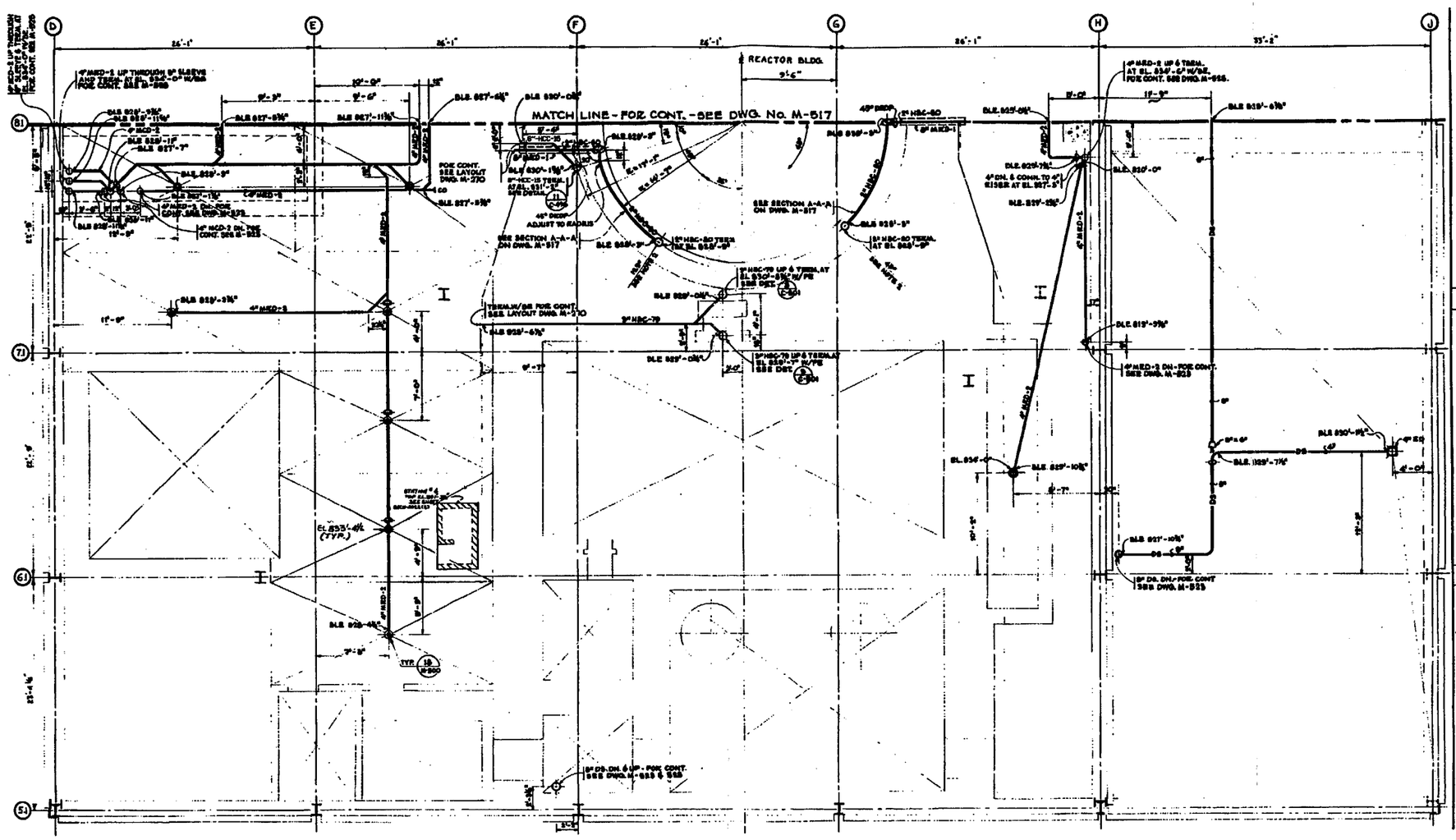

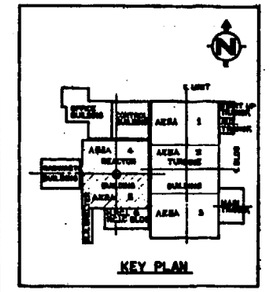

GENERAL NOTES

1. FOR TYPICAL DETAILS AND LEGEND SEE DWG. No. M-500
2. BURN NEW HOLES FOR 3" DRAIN LINES @ AT. 48" ϕ 189°, PLUG 3" HOLES @ AT. 30" ϕ 90° ON PLATE 19-B. (SEE DWG. W/DECHTEL LOG NO. 7884-C3-17-1)

REFERENCE DRAWINGS

M-500	DRAINAGE DETAILS AND LEGEND
M-523	DRAINAGE - REACTOR BLDG. AREA 5 PLAN AT EL. 812'-0"
M-525	DRAINAGE - REACTOR BLDG. AREA 5 PLAN AT EL. 855'-6"
M-517	DRAINAGE - REACTOR BLDG. AREA 4 PLAN AT EL. 833'-6"
C-481	NEW FUEL STORAGE VAULT DETAILS
C-501	DRYWELL PLUG SLOT DETAILS
C-446	REACTOR BLDG. REACTOR WELL, SPENT FUEL & DRYER SEPARATOR POOL SECTIONS & DETAILS SH. 2
M-270	AREA-5 PIPING PLAN BELOW EL. 833'-0"

DUANE ARNOLD ENERGY CENTER
IES UTILITIES
UPDATED FINAL SAFETY ANALYSIS REPORT

DRAINAGE-REACTOR BUILDING-
AREA No. 5 AT 833'-6"

FIGURE 9.3-22

BECH-M524 REV. 4

REVISION 15 - 5/00

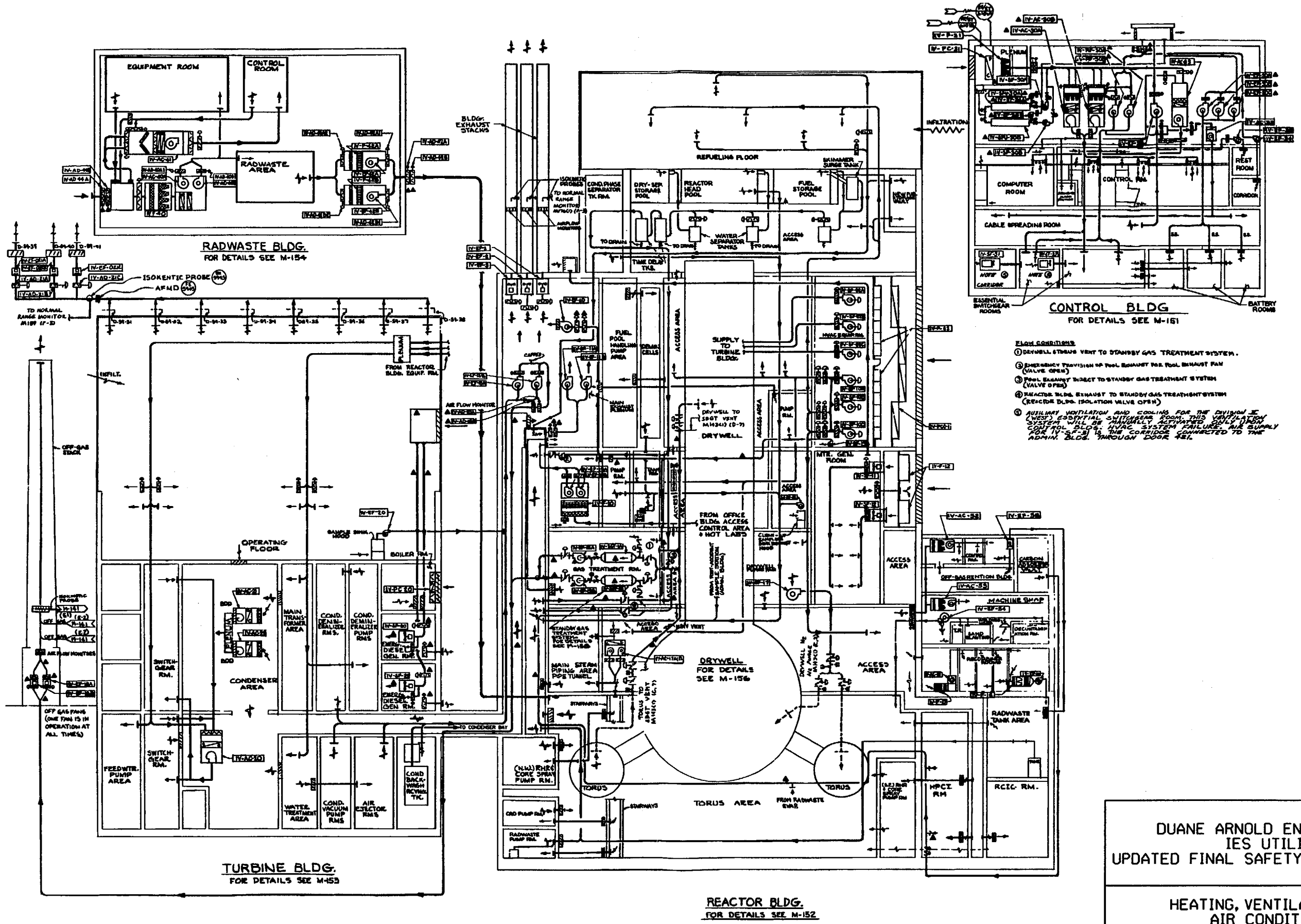

FLOW CONDITIONS

1. DRYWELL & TORUS VENT TO STANDBY GAS TREATMENT SYSTEM.
2. EMERGENCY PROVISION OF POOL EXHAUST FOR POOL EXHAUST FAN (VALVE OPEN)
3. POOL EXHAUST DIRECT TO STANDBY GAS TREATMENT SYSTEM (VALVE OPEN)
4. REACTOR BLDG. EXHAUST TO STANDBY GAS TREATMENT SYSTEM (REACTOR BLDG. ISOLATION VALVE OPEN)
5. AUXILIARY VENTILATION AND COOLING FOR THE DIVISION II (WEST) ESSENTIAL SWITCHGEAR ROOM. THIS VENTILATION SYSTEM WILL BE MANUALLY ACTIVATED ONLY UPON CONTROL BLDG. HVAC SYSTEM FAILURE. AIR SUPPLY FOR IV-SF-51 IS THE CORRIDOR CONNECTED TO THE ADMIN. BLDG. THROUGH DOOR 481.

NOTE:
1) FOR LOCATION OF FIRE DAMPERS SEE APPLICABLE P&ID.
2) FOR SYMBOLS & ABBREVIATIONS SEE M-179

DUANE ARNOLD ENERGY CENTER
IES UTILITIES
UPDATED FINAL SAFETY ANALYSIS REPORT

HEATING, VENTILATION, AND AIR CONDITIONING
PLANT AIR FLOW DIAGRAM

FIGURE 9.4-1

REVISION 15 - 5/00

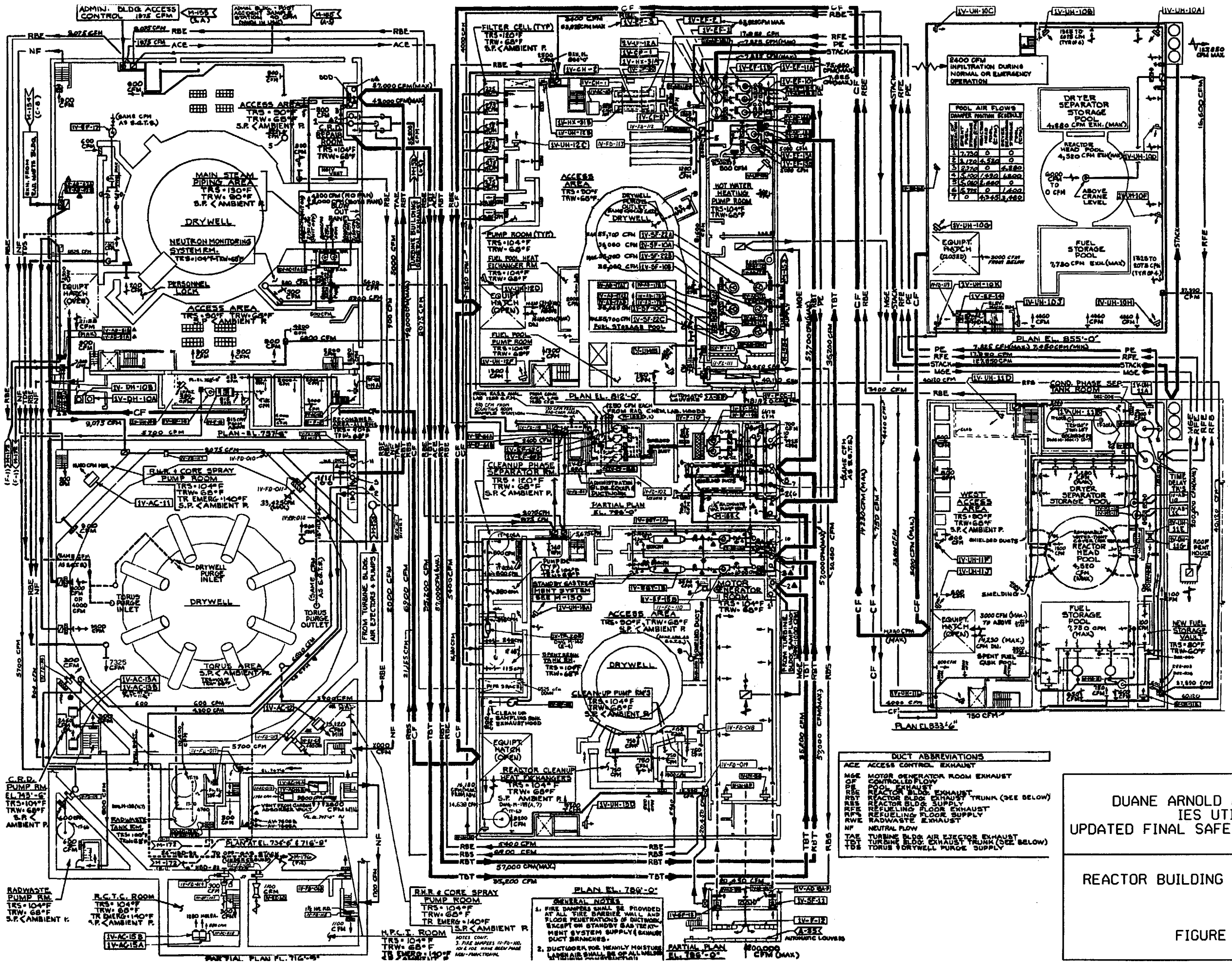

DUCT ABBREVIATIONS	
ACE	ACCESS CONTROL EXHAUST
MGE	MOTOR GENERATOR ROOM EXHAUST
CF	CONTROLLED FLOW
PE	POOL EXHAUST
RBE	REACTOR BLDG. EXHAUST
RBT	REACTOR BLDG. EXHAUST TRUNK (SEE BELOW)
RBS	REACTOR BLDG. SUPPLY
RFE	REFUELING FLOOR EXHAUST
RFS	REFUELING FLOOR SUPPLY
RWE	RADWASTE EXHAUST
NF	NEUTRAL FLOW
TAE	TURBINE BLDG. AIR EJECTOR EXHAUST
TBT	TURBINE BLDG. EXHAUST TRUNK (SEE BELOW)
TDS	TORUS & DRYWELL PURGE SUPPLY

DUANE ARNOLD ENERGY CENTER
IES UTILITIES
UPDATED FINAL SAFETY ANALYSIS REPORT

REACTOR BUILDING AIR FLOW DIAGRAM

FIGURE 9.4-3

BECH-M152 REV. 26

REVISION 15 - 5/00

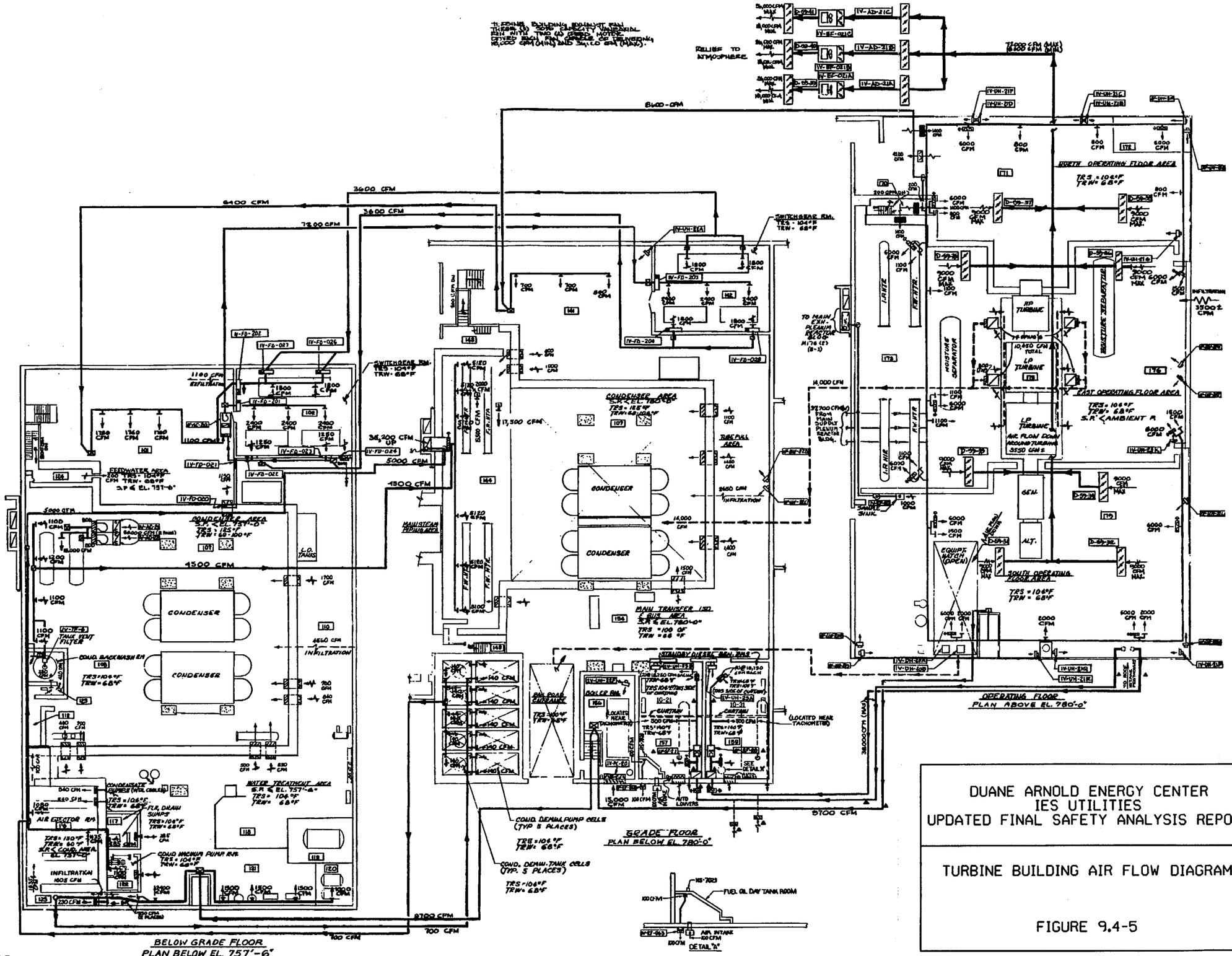

DUANE ARNOLD ENERGY CENTER
IES UTILITIES
UPDATED FINAL SAFETY ANALYSIS REPORT

TURBINE BUILDING AIR FLOW DIAGRAM

FIGURE 9.4-5

BECH-M153 REV. 20

REVISION 15 - 5/00

VENT VALVE SCHEDULE FOR UNIT HEATERS

UNIT HEATER No.	1VUH021A	1VUH021B	1VUH021C	1VUH021D	1VUH021E	1VUH021F	1VUH021G	1VUH021H	1VUH021J	1VUH021K	1VUH021L	1VUH021M	1VUH021N	1VUH021P	1VUH021Q	1VUH021R	1VUH022A	1VUH022B	1VUH022C	1VUH022F
SHUT-OFF VALVE No.	V63-0106	V63-0108	V63-0107	V63-0126	V63-0109	V63-0110	V63-0111	V63-0112	V63-0113	V63-0114	V63-0115	V63-0116	V63-0117	V63-0118	V63-0119	V63-0120	V63-0121	V63-0122	V63-0123	V63-0124	V63-0127
AIR VENT VALVE No.	AV6321A	AV6321B	AV6321C	AV6321D	AV6321E	AV6321F	AV6321G	AV6321H	AV6321J	AV6321K	AV6321L	AV6321M	AV6321N	AV6321P	AV6321Q	AV6321R	AV6322A	AV6322B	AV6322C	AV6322F

VENT VALVE SCHEDULE FOR DOOR HEATERS

DOOR HEATER No.	1VDH020A	1VDH020B
SHUT-OFF VALVE No.	V63-0138	V63-0128
AIR VENT VALVE No.	AV6320A	AV6320B

PUMP & CONTROL SCHEDULE

SYSTEM	HIL & REF. DWG.	PUMP D/WGH. & SUCTION SIZE	PP	TS	DET. POINT	DET. POINT	SUB PP NO	CV & SIZE	FI	PP	TC	DET. POINT	OUTLET PP	INLET PP	PSV
DEMIN. WT. STORAGE TANK HX.	E3314	1WHP043 (1 1/2")	E3336	++9		E33		E3333	E3334 (1 1/2")	PH3333	–	E3334 (1HB)	E3339	E3339	E3324
CONDENSATE STORAGE TANK HX.	E3315	1WHP044 (3")	E3334	++9		E33		E3335	E3339 (1 1/2")	PH3336	–	E3339 (1GB)	E3340	E3341	E3345
LUBE OIL COND. EQ. HX.	E3301	1WHP028 (1 1/2")	E3335		–			E3337	E3337 (1")	–	E3344	E3337	E3342	E3343	

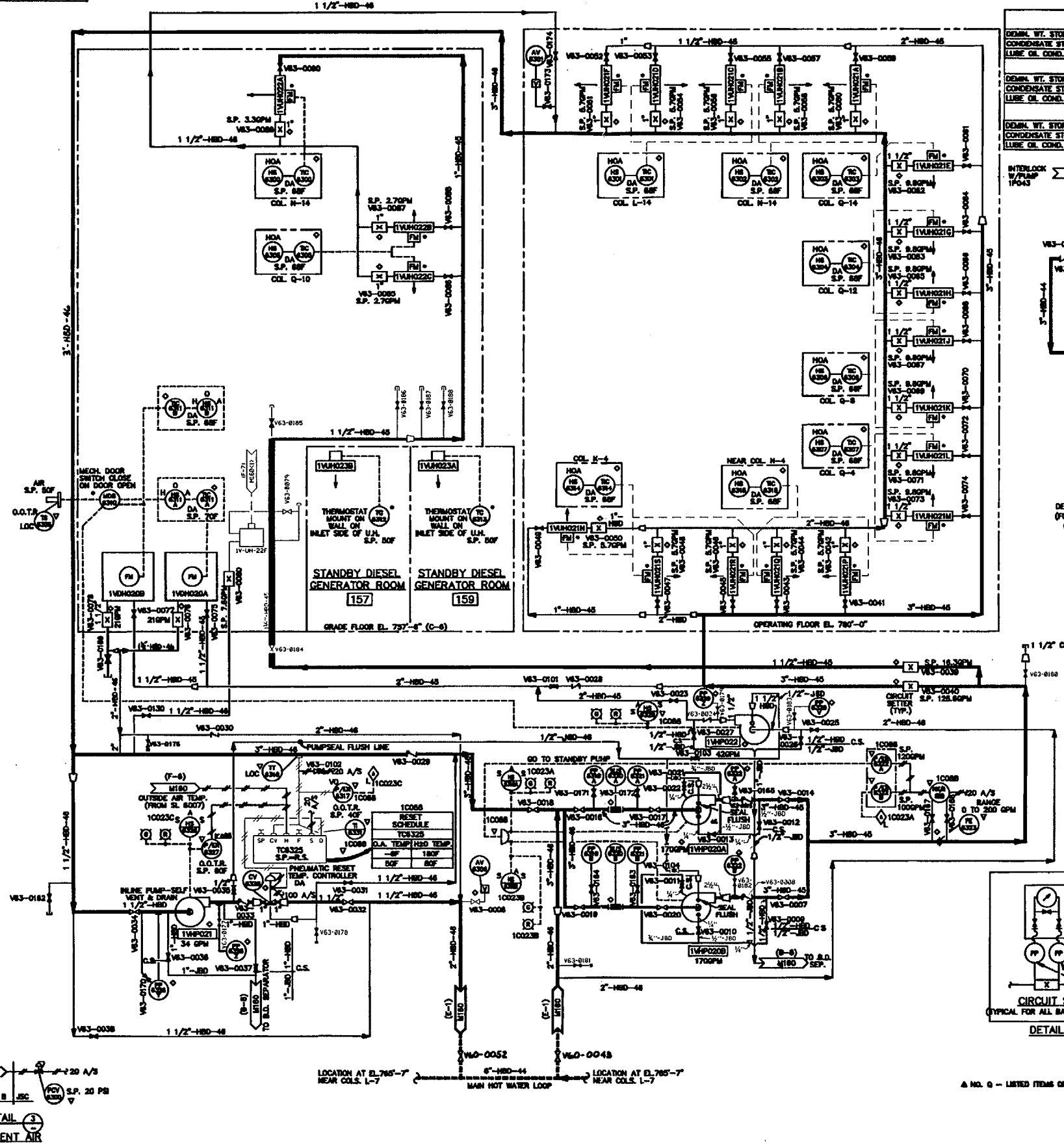

VALVE SCHEDULE

DEMIN. WT. STOR. TANK HX.	V63-0001	V63-0002	V63-0003	V63-0004	V63-0005	V63-0140	V63-0143	V63-0141	V63-0144	V63-0139
CONDENSATE STOR. TANK HX.	V63-0091	V63-0087	V63-0083	V63-0084	V63-0085	V63-0135	V63-0134	V63-0133	V63-0149	V63-0148
LUBE OIL COND. EQ. HX.	V63-0096	V63-0097	V63-0098	V63-0099*	V63-0100	V63-0127	V63-0138	V63-0161	V63-0160	V63-0129

*TRIPLE DUTY VALVE

DEMIN. WT. STOR. TANK HX.	V63-0137	V63-0136	V63-0142	V63-0139	–	PCV-6324	05	F-8
CONDENSATE STOR. TANK HX.	V63-0152	V63-0150	V63-0153	V63-0151	–	PCV-6334	05	F-8
LUBE OIL COND. EQ. HX.	V63-0154	V63-0158	–	V63-0132	V63-0159*	PCV-6337	06	E-6

*SEE FSK 1265

DEMIN. WT. STOR. TANK HX.	V63-0189	V63-0190
CONDENSATE STOR. TANK HX.	V63-0191	V63-0192
LUBE OIL COND. EQ. HX.		

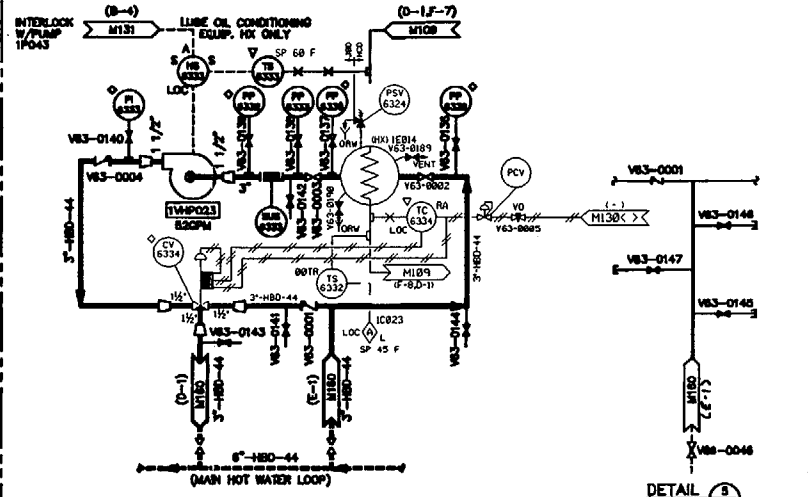

DETAIL 4

DEMINERALIZED WATER STORAGE TANK HEAT EXCHANGER LOOP (FOR LUBE OIL CONDITIONING EQUIP. HX LOOP – SEE TABLE) (FOR CONDENSATE STORAGE TANK HX LOOP – SEE TABLE)

DETAIL 5

FOR LUBE OIL CONDITIONING EQUIP. HX LOOP

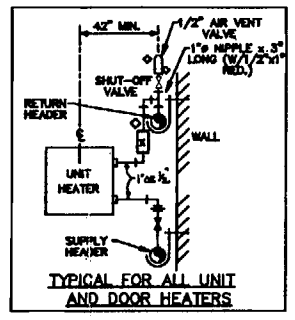

TYPICAL FOR ALL UNIT AND DOOR HEATERS

DETAIL 2

(FOR VENT VALVE Nos. – SEE VALVE SCHEDULE)

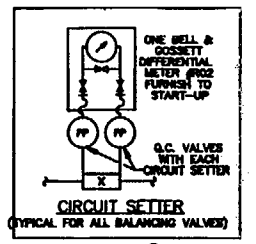

CIRCUIT SETTER (TYPICAL FOR ALL BALANCING VALVES)

DETAIL 1

NOTES:

1. FOR SYMBOLS & ABBREVIATIONS NOT ON THIS SHEET SEE M170.
2. –[X]– CIRCUIT SETTER, BELL & GOSSETT OR EQUAL.
4. HS & TIC SHALL BE MOUNTED 5'-6" ABOVE FLOOR.
5. ◇ –SYMBOL DESIGNATES FIELD PURCHASED ITEMS.
6. ℄ OF UNIT HEATERS SHALL BE APPROXIMATELY 11'-0" ABOVE FLOOR UNLESS OTHERWISE NOTED ON H & V PLANS. HEATER SHOULD BE CENTERED BETWEEN SUPPLY & RETURN PIPES.
7. HANDSWITCH (HS) LEGEND
   SAS = START/AUTO/STOP
   HOA = HEATING/OFF/AUTO
8. △ SEISMIC CLASS 1 & QA
9. ▽ CONTROLS SUPPLIED BY HVAC INST. SUBCONTRACTOR.
10. ◇ THESE UNIT HEATERS HAVE A LOCALLY INSTALLED EXTERNAL THERMAL OL UNIT, WITH HANDSWITCH POSITION [ON/TRIP/OFF]. REF. E3G5 SH.41.

△ NO. Q – LISTED ITEMS ON THIS DRAWING.

DUANE ARNOLD ENERGY CENTER
IES UTILITIES
UPDATED FINAL SAFETY ANALYSIS REPORT

P & ID
AUXILIARY HEATING SYSTEM
TURBINE BUILDING

FIGURE 9.4-6

THIS DRAWING IS TO BE USED FOR HVAC ONLY

BACKGROUND EQUIPMENT MAY NOT BE CORRECT AS TO LOCATION OR SIZE

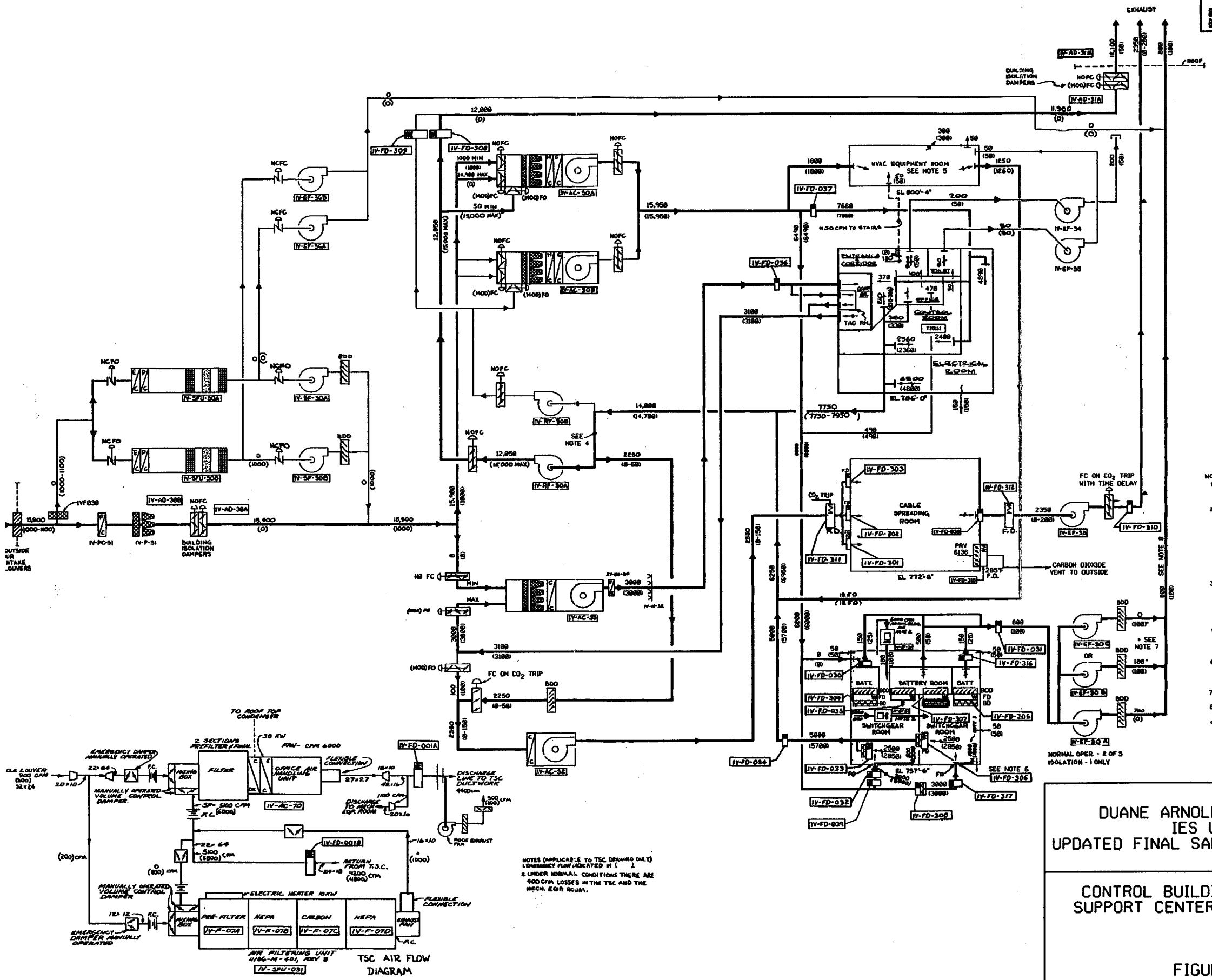

NOTES (APPLICABLE TO TSC DRAWING ONLY)
1. EMERGENCY FLOW INDICATED at ( ).
2. UNDER NORMAL CONDITIONS THERE ARE 400 CFM LOSSES IN THE TSC AND THE MECH. EQP. ROOM.

NOTES:
1. AIR VOLUME FIGURES
   2650 → NORMAL CONDITION
   (100) → ISOLATION CONDITION
2. AUXILIARY VENTILATION AND COOLING FOR THE DIVISION II (WEST) ESSENTIAL SWITCH GEAR ROOM. THIS SYSTEM WILL BE MANUALLY ACTIVATED UPON FAILURE OF THE CONTROL BUILDING HVAC SYSTEM. AIR SUPPLY FOR IV-EF-31 IS FROM THE CORRIDOR CONNECTED TO THE ADMIN. BUILDING (DOOR 421), IV-EF-31 SUPPLIES AIR TO SWITCHGEAR ROOM THROUGH OPEN DOOR 482. AIR IS EXHAUSTED FROM THE ROOM VIA IV-EF-37, THROUGH DOOR 485, AND INTO THE TURBINE BUILDING THROUGH DOOR 122.
3. *THE DIVISION OF THE AIR FLOW SUPPLY WITHIN THE EAST AND WEST SWITCHGEAR ROOMS IS ONLY APPROXIMATE.*
5. ADDITIONAL RETURN AIR IN-LEAKAGE IN THE THE HVAC EQUIP. ROOM THROUGH DUCTING, FAN SHROUDING, ETC. IS ASSUMED TO CONTRIBUTE UP TO 300 CFM TO THE TOTAL RETURN AIR QUANTITY FOR THE SYSTEM.
6. AN ADDITIONAL LOSS OF 50 CFM IS ASSUMED LOST TO THE TURBINE BUILDING FROM THE EAST ESS. SWITCHGEAR ROOM VIA PENETRATION SEALS, TRAY PENETRATIONS, WALL-CEILING JOINTS ETC.
7. THIS IS THE DESIGN MINIMUM FLOW RATE REQUIRED FOR H_2 GAS AND HEAT REMOVAL
8. IF IV-EF-30 B & C ARE BOTH RUNNING THE EXHAUST FLOW WILL BE 200 CFM.
9. EITHER IV-EF-30B OR IV-EF-30C MAY BE RUN IN ISOLATION IF DI BALANCED CONDITION

DUANE ARNOLD ENERGY CENTER
IES UTILITIES
UPDATED FINAL SAFETY ANALYSIS REPORT

CONTROL BUILDING AND TECHNICAL SUPPORT CENTER AIR FLOW DIAGRAM

FIGURE 9.4-7

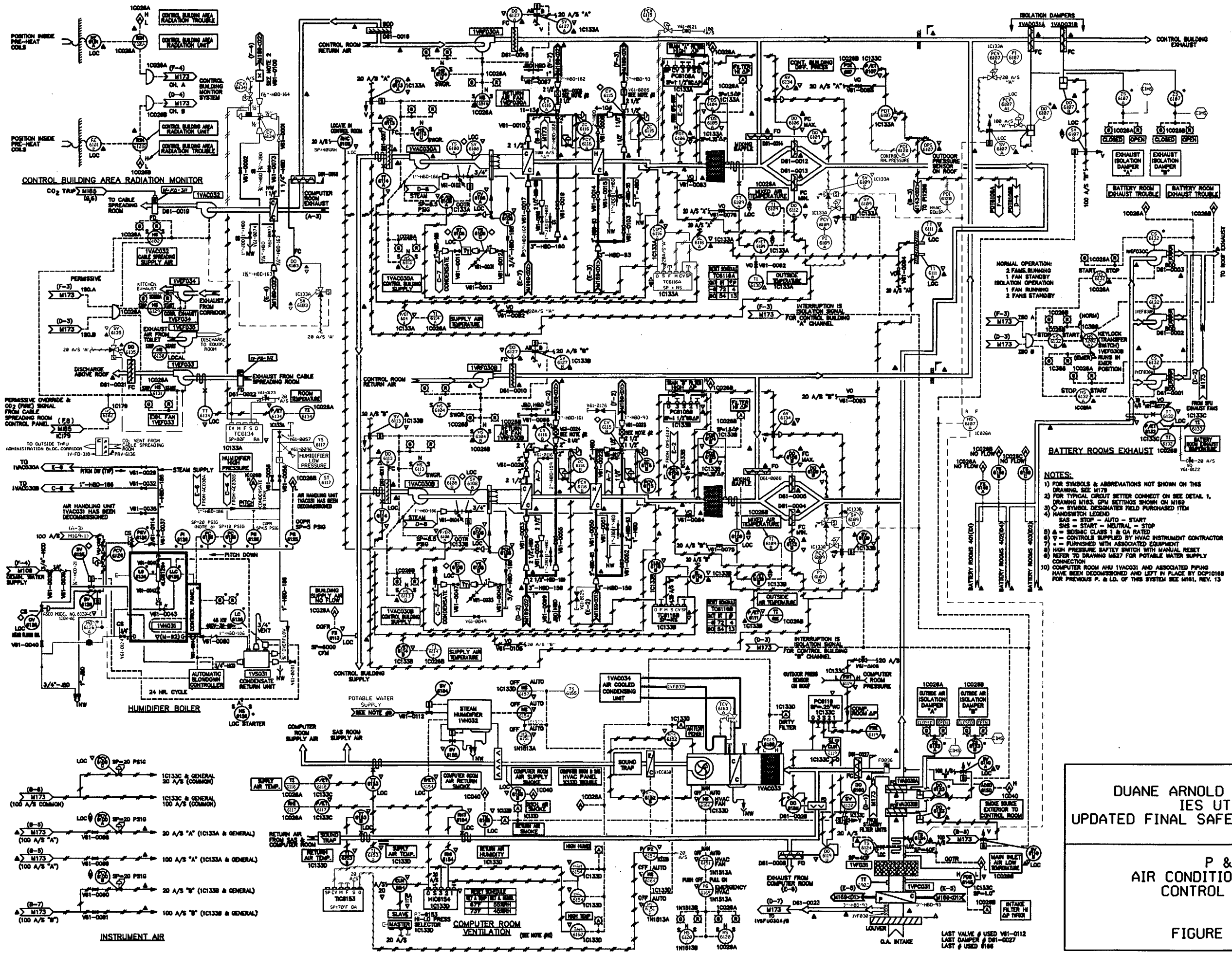

DUANE ARNOLD ENERGY CENTER
IES UTILITIES
UPDATED FINAL SAFETY ANALYSIS REPORT

P & ID
AIR CONDITIONING SYSTEM
CONTROL BUILDING

FIGURE 9.4-8

BECH-M161 REV. 44

REVISION 15 - 5/00

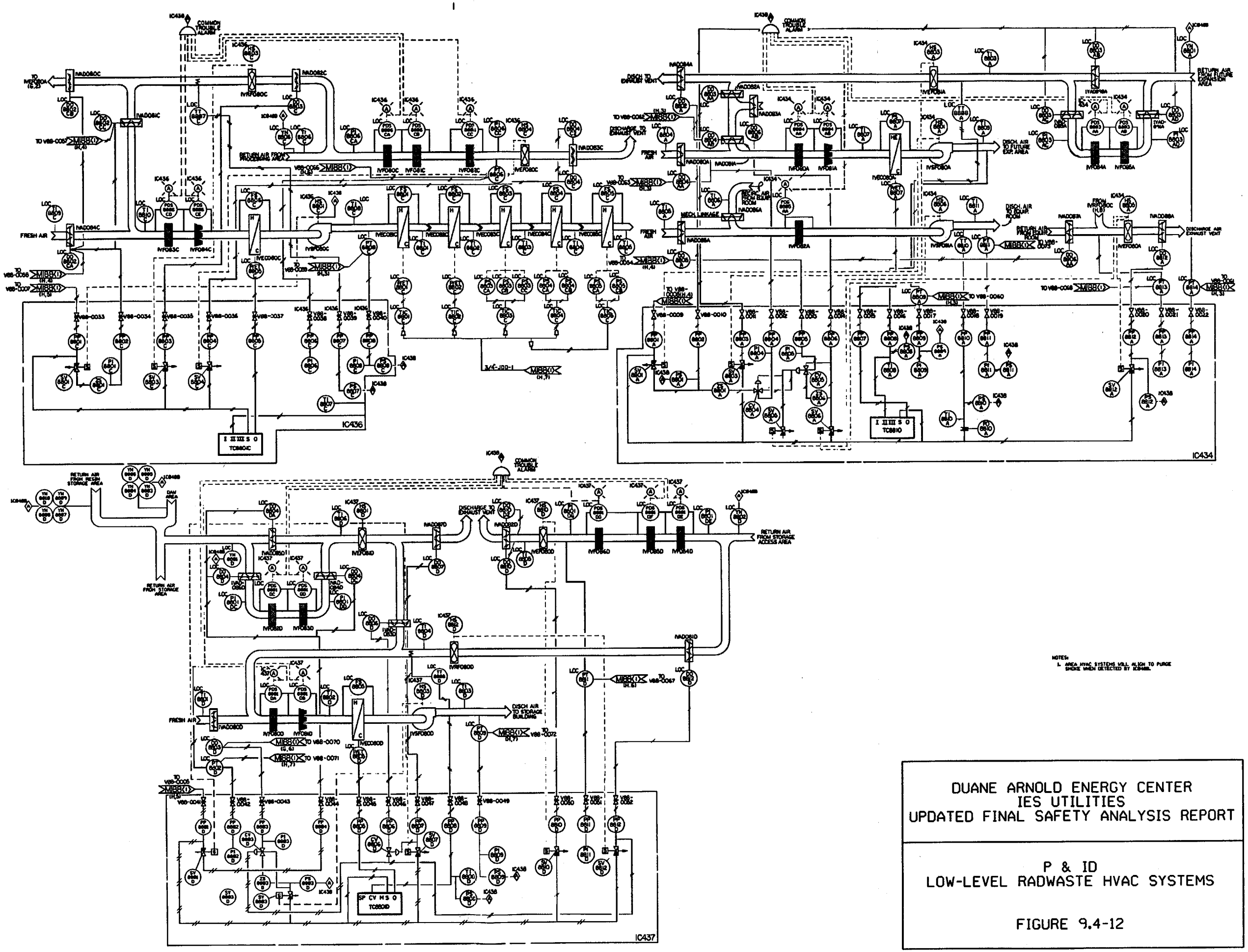

NOTES:
1. AREA HVAC SYSTEMS WILL ALIGN TO PURGE SMOKE WHEN DETECTED BY IC8488.

DUANE ARNOLD ENERGY CENTER
IES UTILITIES
UPDATED FINAL SAFETY ANALYSIS REPORT

P & ID
LOW-LEVEL RADWASTE HVAC SYSTEMS

FIGURE 9.4-12

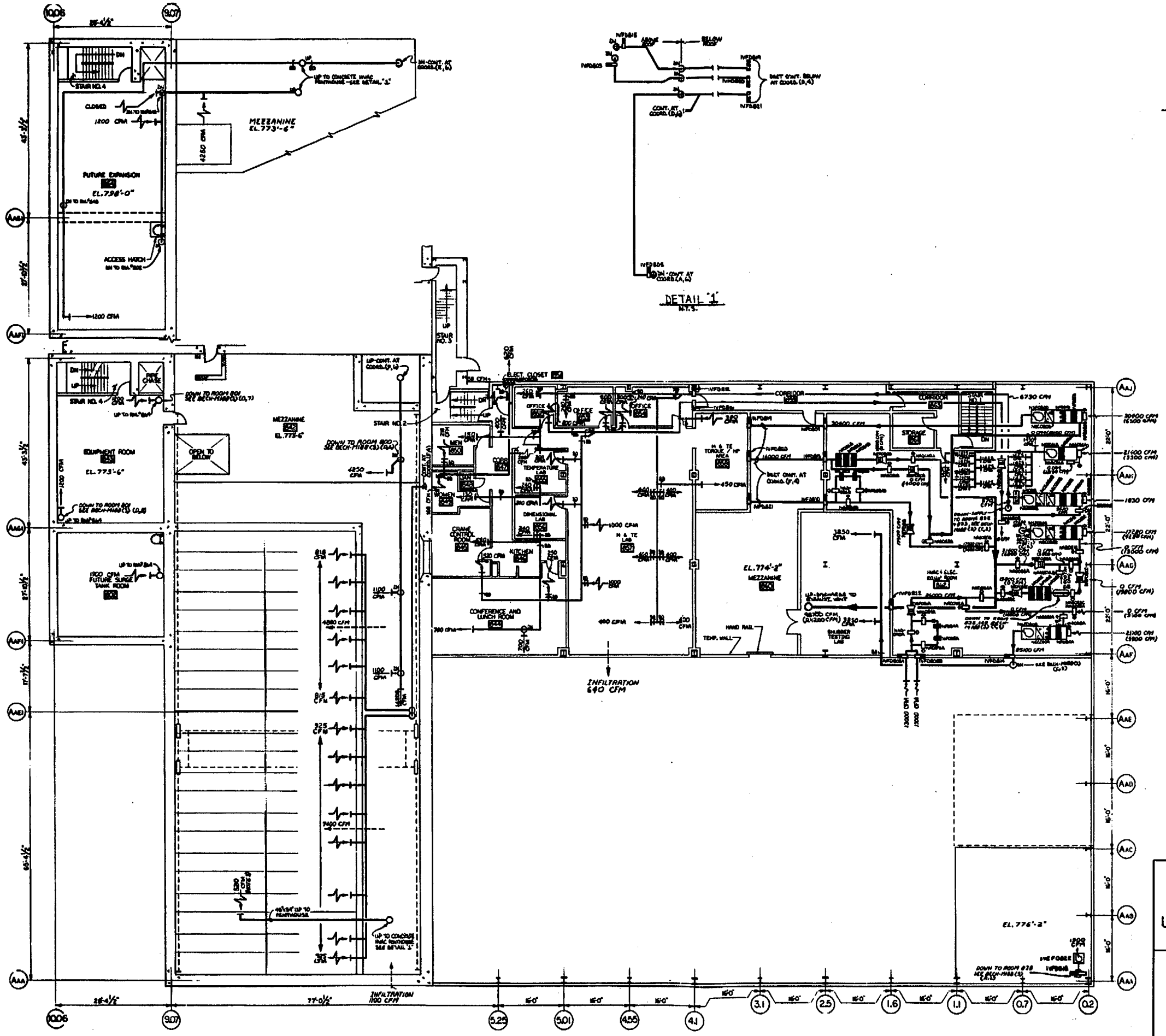

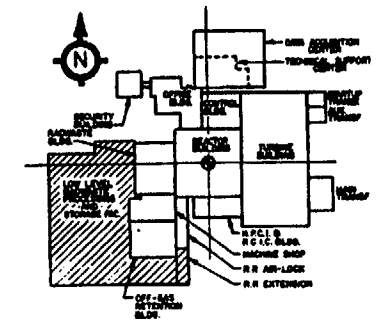

NOTE:
1. REFER TO BECH-M173 FOR SYMBOLS AND ABBREVIATIONS USED ON THIS DRAWING.
2. FLOWS AS SHOWN ARE BASED ON DETAIL DESIGN. ACTUAL TEST FLOW DATA WAS INACCURATE AND THUS NOT SHOWN. ACTUAL TEST FLOW DATA CAN BE FOUND IN DCP-1514.
3. VENT LOCATED ABOVE STORAGE VAULT.
4. SUP. FLOW VALUES IN PARENTHESES INDICATE FLOWS DURING WINTER OPERATION.
5. THIS DRAWING SHOULD BE USED FOR ITS INTENDED PURPOSE ONLY. OTHER DETAILS SHOWN ARE FOR INFORMATION ONLY. FOR ARCHITECTURAL DETAILS REFER TO BECH-A181.

DUANE ARNOLD ENERGY CENTER
IES UTILITIES
UPDATED FINAL SAFETY ANALYSIS REPORT

AIR FLOW DIAGRAM LLRPSF

FIGURE 9.4-14

BECH-M188<4> REV. 2

REVISION 15 - 5/00

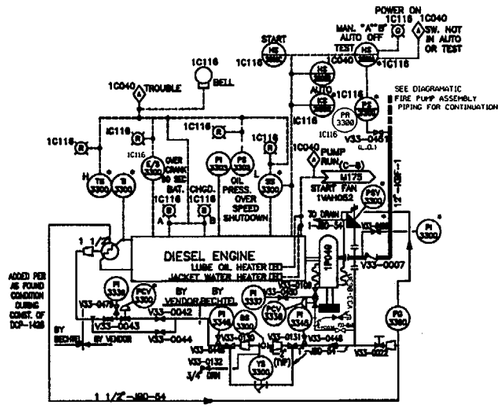

DIESEL FIRE PUMP DETAIL

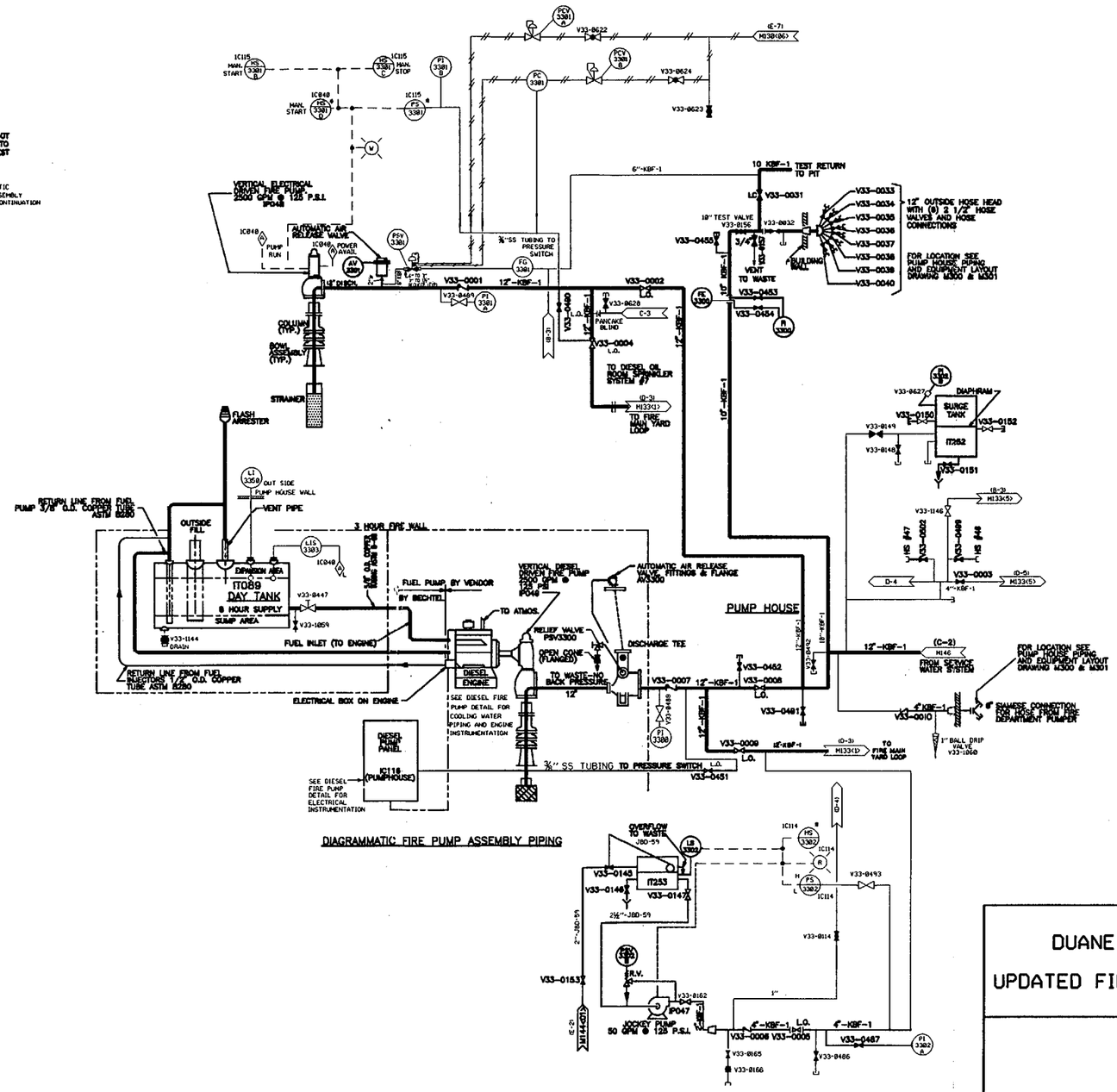

DIAGRAMMATIC FIRE PUMP ASSEMBLY PIPING

DUANE ARNOLD ENERGY CENTER
IES UTILITIES
UPDATED FINAL SAFETY ANALYSIS REPORT

P & ID
FIRE PROTECTION

FIGURE 9.5-1 SH. 2

REVISION 15 - 5/00

BECH-M133<2> REV. 21

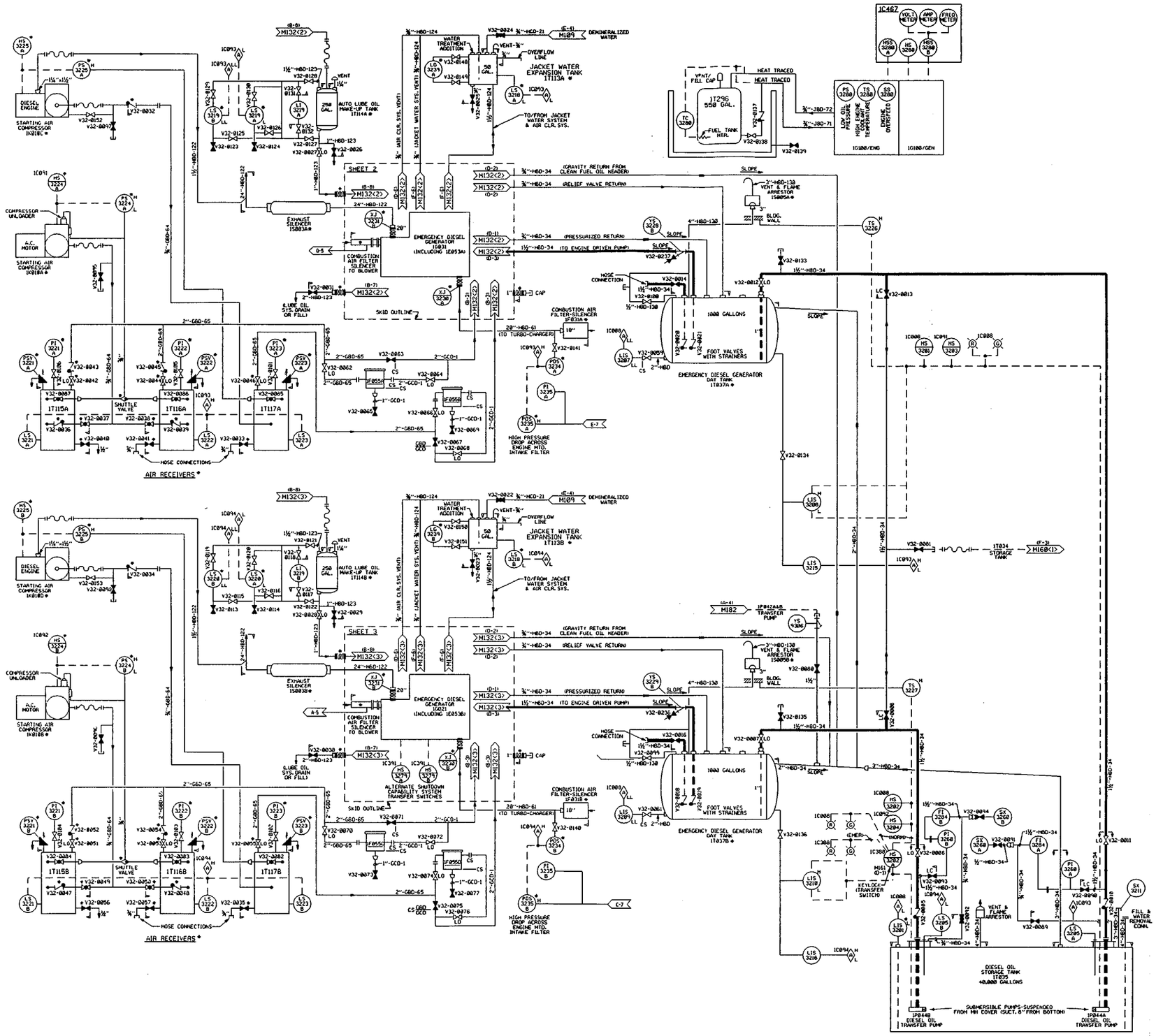

BECH-M132<1> REV. 8

DUANE ARNOLD ENERGY CENTER
IES UTILITIES
UPDATED FINAL SAFETY ANALYSIS REPORT

P & ID
DIESEL-GENERATOR SYSTEMS

FIGURE 9.5-2

REVISION 15 - 5/00

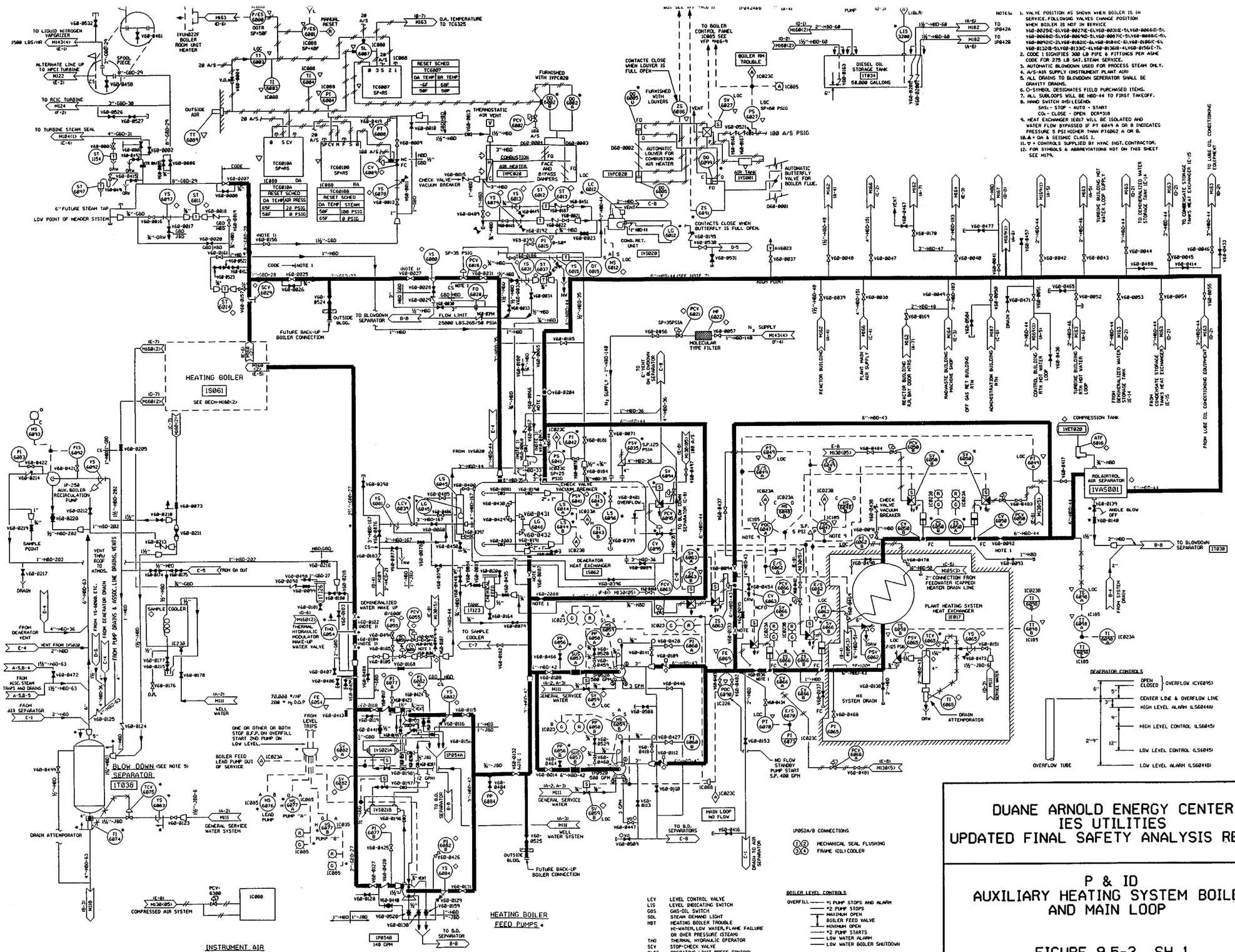

DUANE ARNOLD ENERGY CENTER
IES UTILITIES
UPDATED FINAL SAFETY ANALYSIS REPORT

P & ID
AUXILIARY HEATING SYSTEM BOILER AND MAIN LOOP

FIGURE 9.5-3 SH. 1

BECH-M160<1> REV. 26

REVISION 15 - 5/00

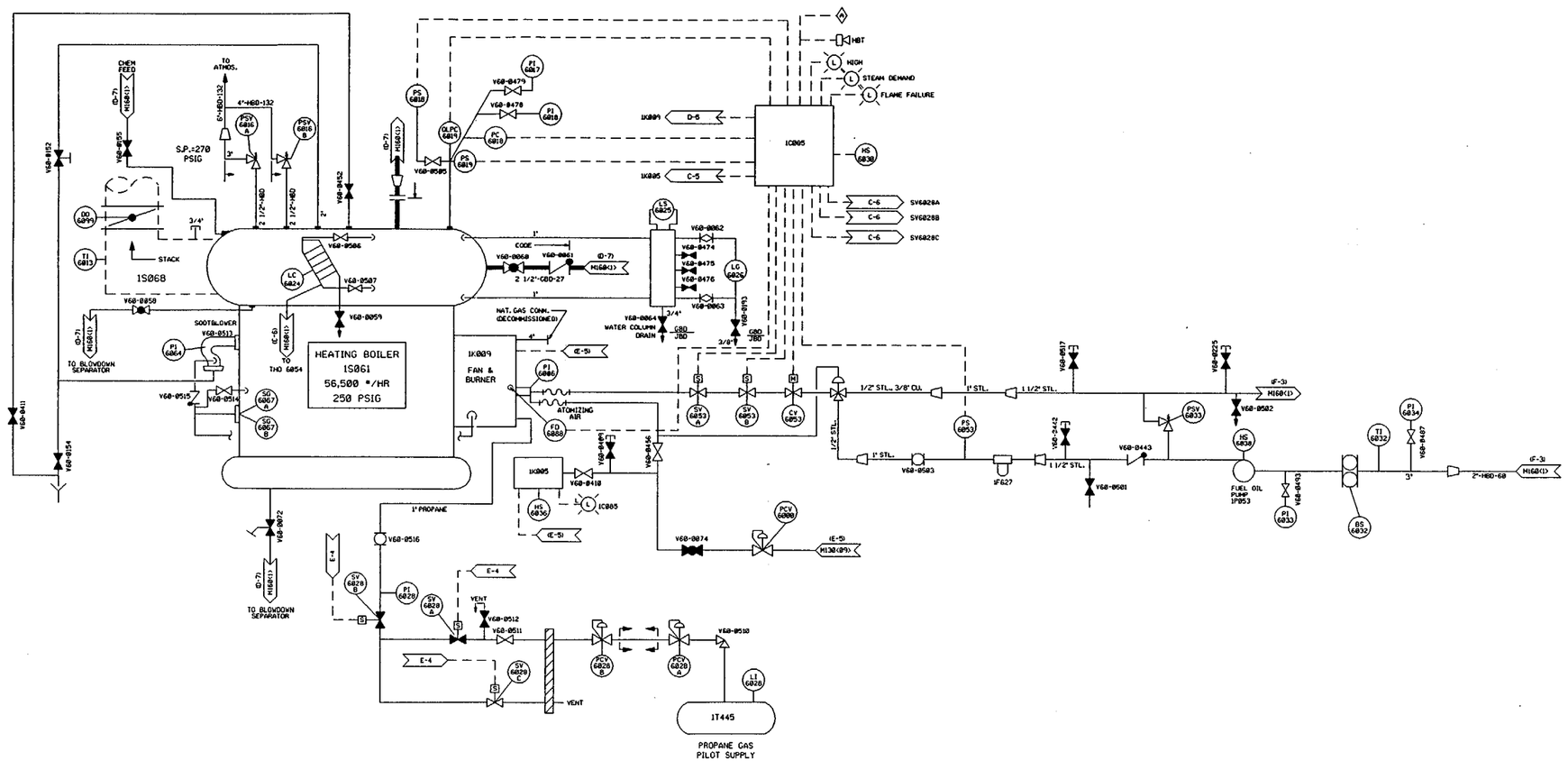

DUANE ARNOLD ENERGY CENTER
IES UTILITIES
UPDATED FINAL SAFETY ANALYSIS REPORT

P & ID
AUXILIARY BOILER SYSTEM

FIGURE 9.5-3 SH. 2

BECH-M160<2> REV. 6

REVISION 15 - 5/00

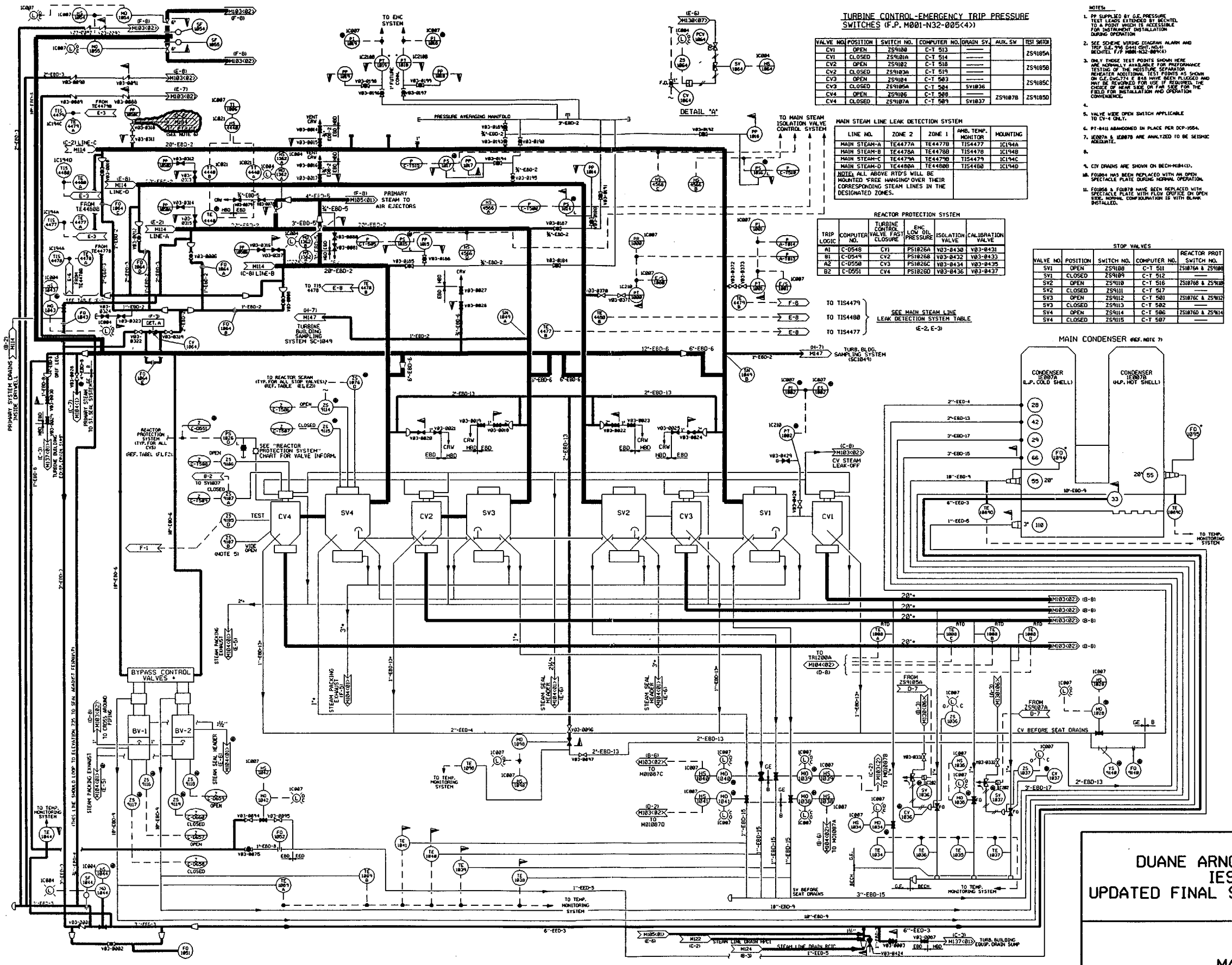

TURBINE CONTROL-EMERGENCY TRIP PRESSURE SWITCHES (F.P. M001-N32-005<4>)

VALVE NO.	POSITION	SWITCH NO.	COMPUTER NO.	DRAIN SV.	AUX. SW	TEST SWITCH
CV1	OPEN	ZS9180	C-T 513	——		ZS9185A
CV1	CLOSED	ZS9181A	C-T 514	——		
CV2	OPEN	ZS9182	C-T 518	——		ZS9185B
CV2	CLOSED	ZS9183A	C-T 519	——		
CV3	OPEN	ZS9184	C-T 503	——		ZS9185C
CV3	CLOSED	ZS9185A	C-T 504	SV1836		
CV4	OPEN	ZS9186	C-T 508	——	ZS9187B	ZS9185D
CV4	CLOSED	ZS9187A	C-T 509	SV1837		

MAIN STEAM LINE LEAK DETECTION SYSTEM

LINE NO.	ZONE 2	ZONE 1	AMB. TEMP. MONITOR	MOUNTING
MAIN STEAM-A	TE4477A	TE4477B	TIS4477	IC194A
MAIN STEAM-B	TE4478A	TE4478B	TIS4478	IC194B
MAIN STEAM-C	TE4479A	TE4479B	TIS4479	IC194C
MAIN STEAM-D	TE4480A	TE4480B	TIS4480	IC194D
NOTE: ALL ABOVE RTD'S WILL BE MOUNTED "FREE HANGING" OVER THEIR CORRESPONDING STEAM LINES IN THE DESIGNATED ZONES.				

REACTOR PROTECTION SYSTEM

TRIP LOGIC	COMPUTER NO.	TURBINE CONTROL VALVE FAST CLOSURE	EHC LOW OIL PRESSURE	ISOLATION VALVE	CALIBRATION VALVE
A1	C-0548	CV1	PS1026A	V03-8430	V03-8431
B1	C-0549	CV2	PS1026B	V03-8432	V03-8433
A2	C-0550	CV3	PS1026C	V03-8434	V03-8435
B2	C-0551	CV4	PS1026D	V03-8436	V03-8437

STOP VALVES

VALVE NO.	POSITION	SWITCH NO.	COMPUTER NO.	REACTOR PROT SWITCH NO.
SV1	OPEN	ZS9108	C-T 511	ZS1076A & ZS9108
SV1	CLOSED	ZS9109	C-T 512	——
SV2	OPEN	ZS9110	C-T 516	ZS1076B & ZS9110
SV2	CLOSED	ZS9111	C-T 517	——
SV3	OPEN	ZS9112	C-T 501	ZS1076C & ZS9112
SV3	CLOSED	ZS9113	C-T 502	——
SV4	OPEN	ZS9114	C-T 506	ZS1076D & ZS9114
SV4	CLOSED	ZS9115	C-T 507	——

NOTES:

1. PP SUPPLIED BY G.E. PRESSURE TEST LEADS EXTENDED BY BECHTEL TO A POINT WHICH IS ACCESSIBLE FOR INSTRUMENT INSTALLATION DURING OPERATION
2. SEE SCHEME VERSUS DIAGRAM ALARM AND TRIP (E.C. 7798 (SHEET 2)(F.P. M001-N32-005(4)) BECHTEL F/P M001-N32-005(4))
3. ONLY THOSE TEST POINTS SHOWN HERE ARE NORMALLY AVAILABLE FOR PREFORMANCE TESTING OF THE MOISTURE SEPARATOR REHEATER. ADDITIONAL TEST POINTS AS SHOWN ON C.E. DWG.774 E 848 HAVE BEEN PLUGGED AND MAY BE REWORKED FOR USE IF REQUIRED. THE CHOICE OF NEAR SIDE OR FAR SIDE FOR THE FIELD FOR INSTALLATION AND OPERATION CONVENIENCE.
4.
5. VALVE WIDE OPEN SWITCH APPLICABLE TO CV-4 ONLY.
6. PT-8411 ABANDONED IN PLACE PER DCP-1564.
7. 1E0097A & 1E0097B ARE ANALYZED TO BE SEISMIC ADEQUATE.
8.
9. CIV DRAINS ARE SHOWN ON BECH-M1B41(1).
10. FO1804 HAS BEEN REPLACED WITH AN OPEN SPECTACLE PLATE DURING NORMAL OPERATION.
11. FO0804 & FO1878 HAVE BEEN REPLACED WITH SPECTACLE PLATE WITH FLOW ORIFICE ON OPEN SIDE. NORMAL CONFIGURATION IS WITH BLANK INSTALLED.

DUANE ARNOLD ENERGY CENTER
IES UTILITIES
UPDATED FINAL SAFETY ANALYSIS REPORT

P & ID
MAIN STEAM

FIGURE 10.3-1 SH. 1

BECH-M103<1> REV. 25

REVISION 15 - 5/00

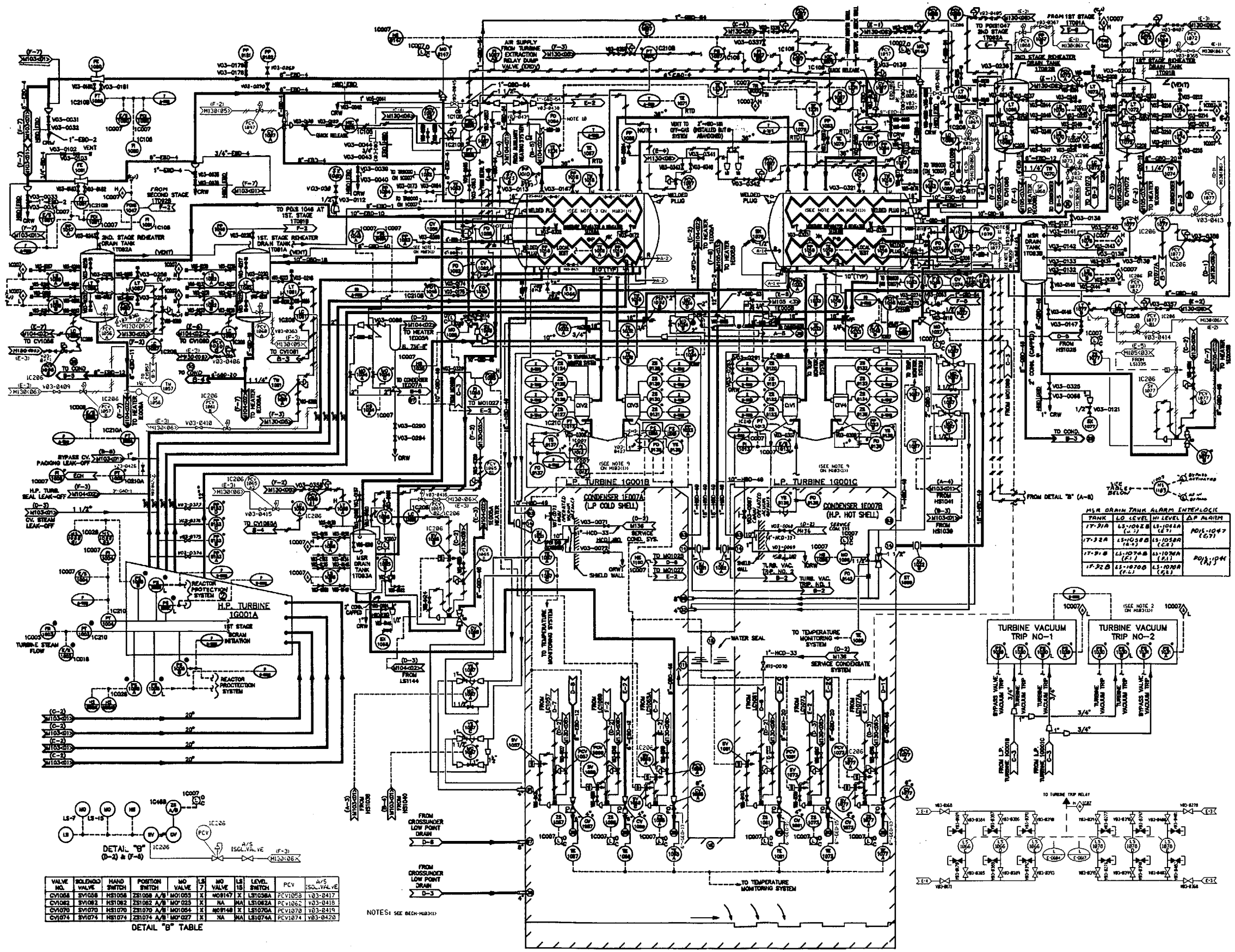

DUANE ARNOLD ENERGY CENTER
IES UTILITIES
UPDATED FINAL SAFETY ANALYSIS REPORT

P & ID
MAIN STEAM

FIGURE 10.3-1 SH. 2

BECH-M103<2> REV. 14

REVISION 15 - 5/00

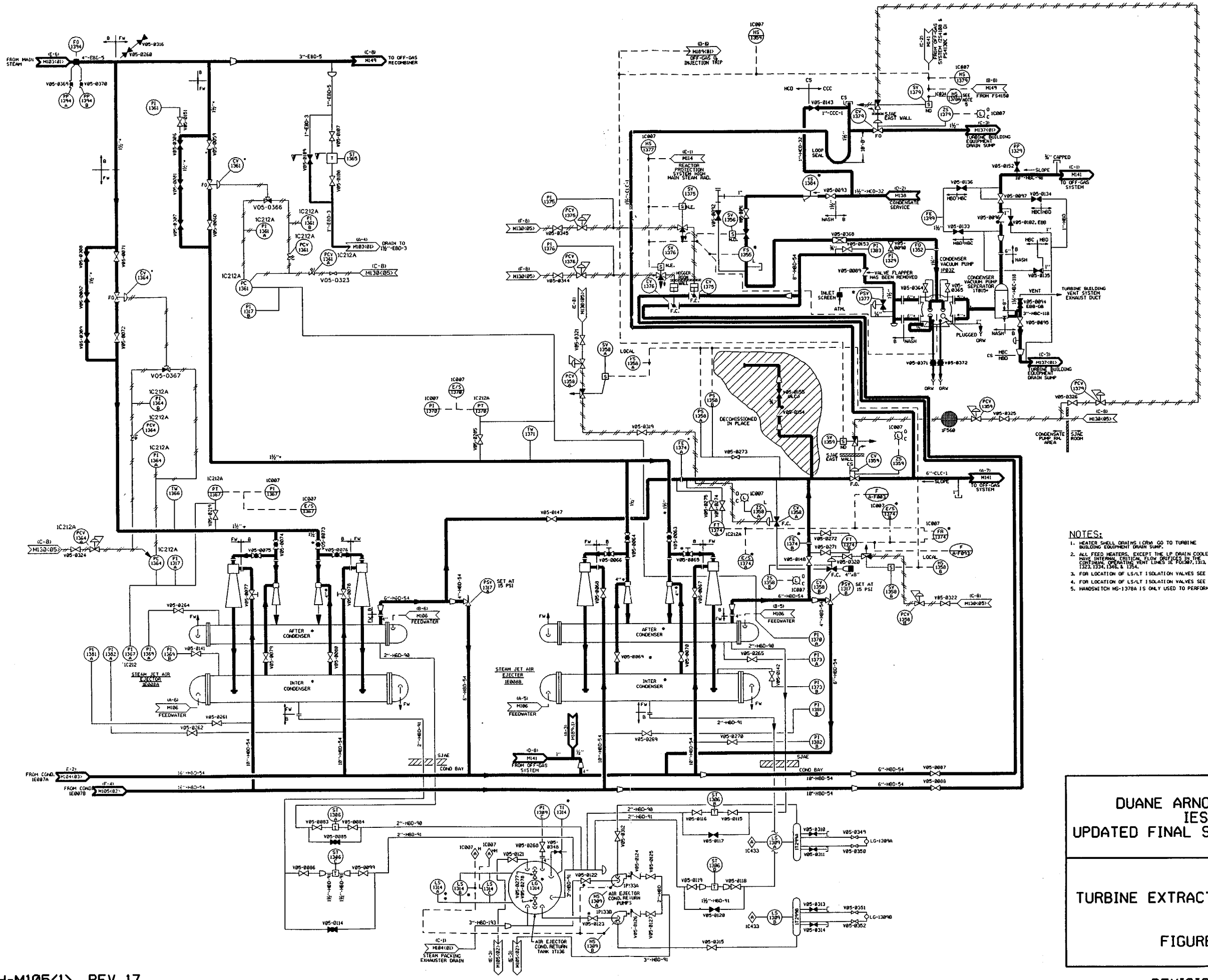

NOTES:

1. HEATER SHELL DRAINS (CRW) GO TO TURBINE BUILDING EQUIPMENT DRAIN SUMP.
2. ALL FEED HEATERS, EXCEPT THE LP DRAIN COOLER HAVE INTERNAL CRITICAL FLOW ORIFICES IN THE CONTINUAL OPERATING VENT LINES (E FO1307, 1312, 1323, 1334, 1345 & 1354.
3. FOR LOCATION OF LS/LT ISOLATION VALVES SEE FSK-05005.
4. FOR LOCATION OF LS/LT ISOLATION VALVES SEE FSK-05006.
5. HANDSWITCH HS-1378A IS ONLY USED TO PERFORM STP420B0B.

DUANE ARNOLD ENERGY CENTER
IES UTILITIES
UPDATED FINAL SAFETY ANALYSIS REPORT

P & ID
TURBINE EXTRACTION STEAM AND DRAINS

FIGURE 10.4-1 SH. 1

BECH-M105<1> REV. 17

REVISION 15 - 5/00

NOTES:
1) FOR LOCATION OF LS/LT ISOLATION VALVES SEE FSK-06508.
2) FOR LOCATION OF LS/LT ISOLATION VALVES SEE FSK-06508
3) HEATER SHELL DRAINS (CRW) GO TO TURBINE BLDG. EQUIP. DRAIN SUMP
4) ALL FEED HEATERS, EXCEPT THE LP DRAIN COOLER HAVE INTERNAL CRITICAL FLOW ORIFICES IN THE CONTINUAL OPERATING VENT LINES IE FO 1307,1313,1323,1334,1348 & 1354.
5) * DENOTES THAT ALL OF THE RECORDER POINTS ARE COMPUTER INPUTS.
6) FOR DETAILS ON BASKET TIP PROBES SEE BECH-M104<3>

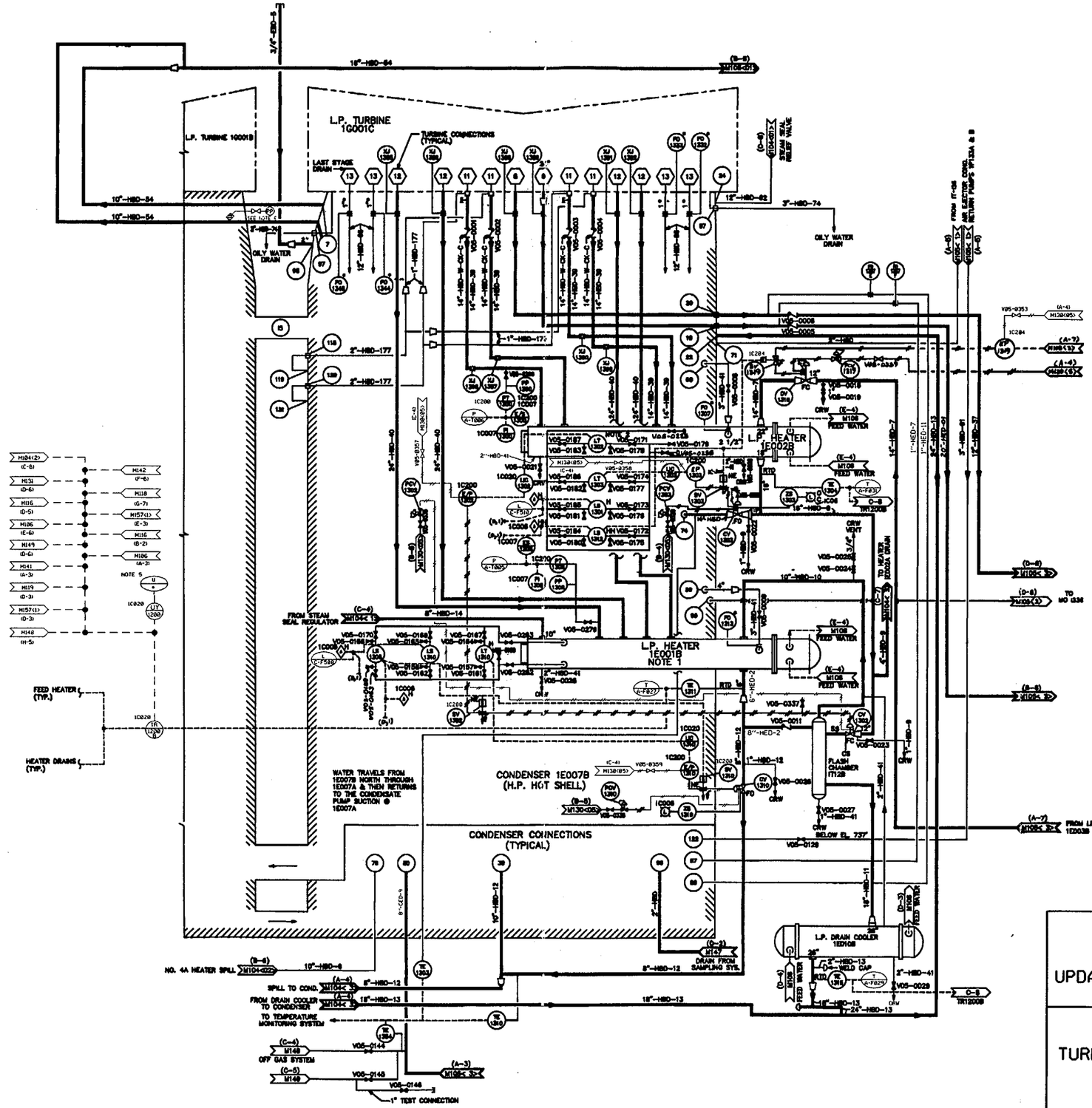

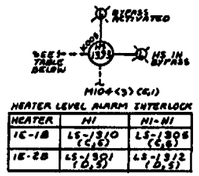

HEATER LEVEL ALARM INTERLOCK

HEATER	HI	HI-HI
1E-1B	LS-1310 (C,E)	LS-1306 (C,E)
1E-2B	LS-1301 (C,E)	LS-1312 (C,E)

DUANE ARNOLD ENERGY CENTER
IES UTILITIES
UPDATED FINAL SAFETY ANALYSIS REPORT

P & ID
TURBINE EXTRACTION STEAM AND DRAINS

FIGURE 10.4-1 SH. 2

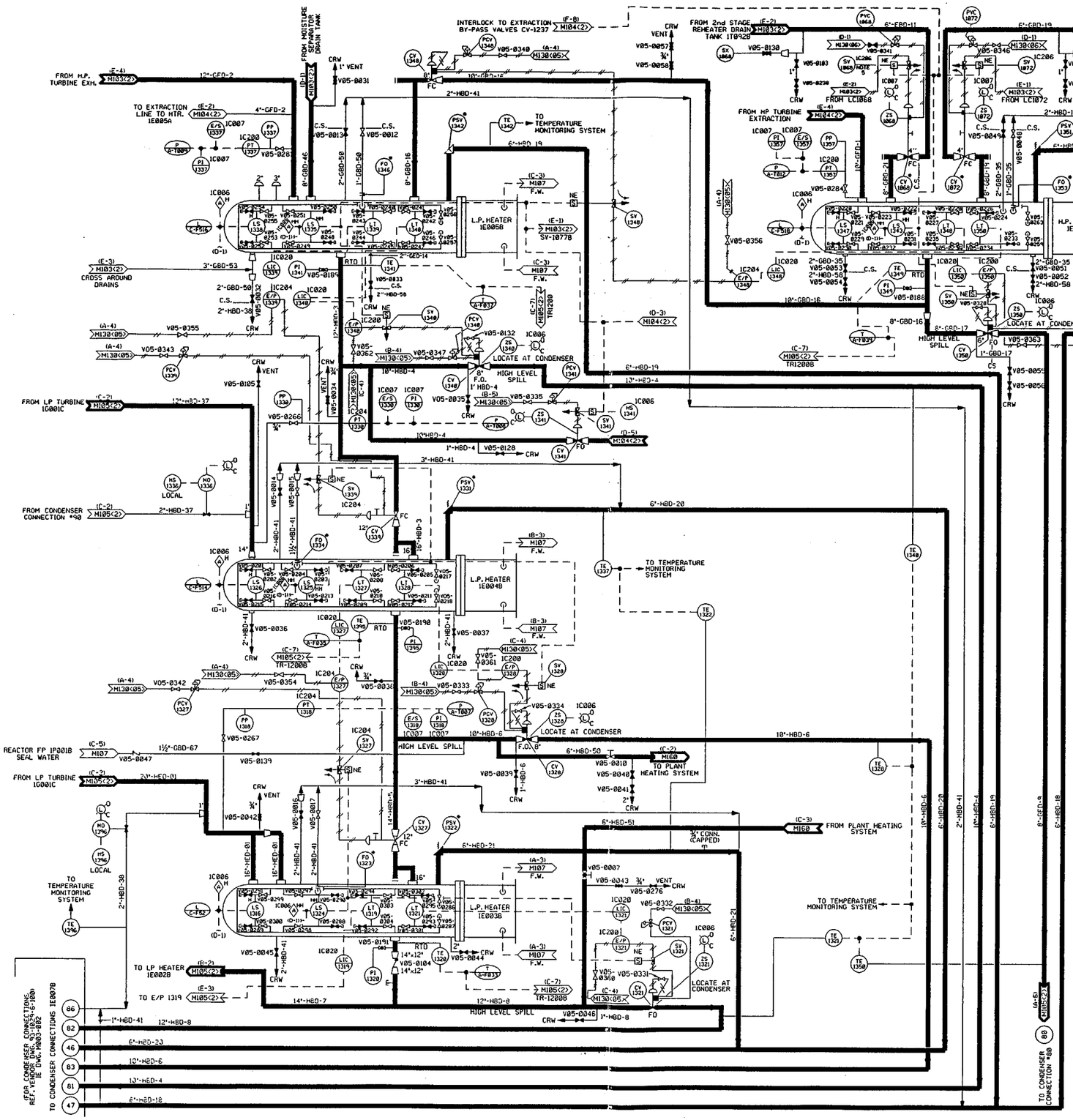

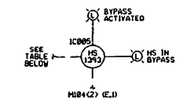

HEATER LEVEL ALARM INTERLOCK

HEATER	HI	HI-HI
1E-3B	LS-1316 (B,7)	LS-1324 (B,7)
1E-4B	LS-1326 (C,7)	LS-1325 (C,6)
1E-5B	LS-1338 (E,7)	LS-1335 (E,7)
1E-6B	LS-1347 (E,4)	LS-1343 (E,4)

NOTES:

1. HEATER SHELL DRAINS (CRW) GO TO TURBINE BUILDING EQUIPMENT DRAIN SUMP.
2. ALL FEED HEATERS, EXCEPT THE LP DRAIN COOLER HAVE INTERNAL CRITICAL FLOW ORIFICES IN THE CONTINUAL OPERATING VENT LINES IE FO 1307, 1313, 1323, 1334, 1346 & 1354.
3. FOR LOCATION OF LS/LT ISOLATION VALVES SEE FSK-05006.
4. FOR LOCATION OF LS/LT ISOLATION VALVES SEE FSK-05006.
5. LEADS FOR CV1068 HAVE BEEN LIFTED

DUANE ARNOLD ENERGY CENTER
IES UTILITIES
UPDATED FINAL SAFETY ANALYSIS REPORT

P & ID
TURBINE EXTRACTION STEAM AND DRAINS

FIGURE 10.4-1 SH. 3

NOTE:

1. ALL FEED WATER HEATERS, EXCEPT L.P. DRAIN COOLER, HAVE INTERNAL CRITICAL FLOW ORIFICES IN THE CONTINUAL OPERATING VENT LINES. I.E. - FDI103, 1114, 1123, 1132, 1143, & 1155.

2. LEADS TO SV1056 HAVE BEEN LIFTED

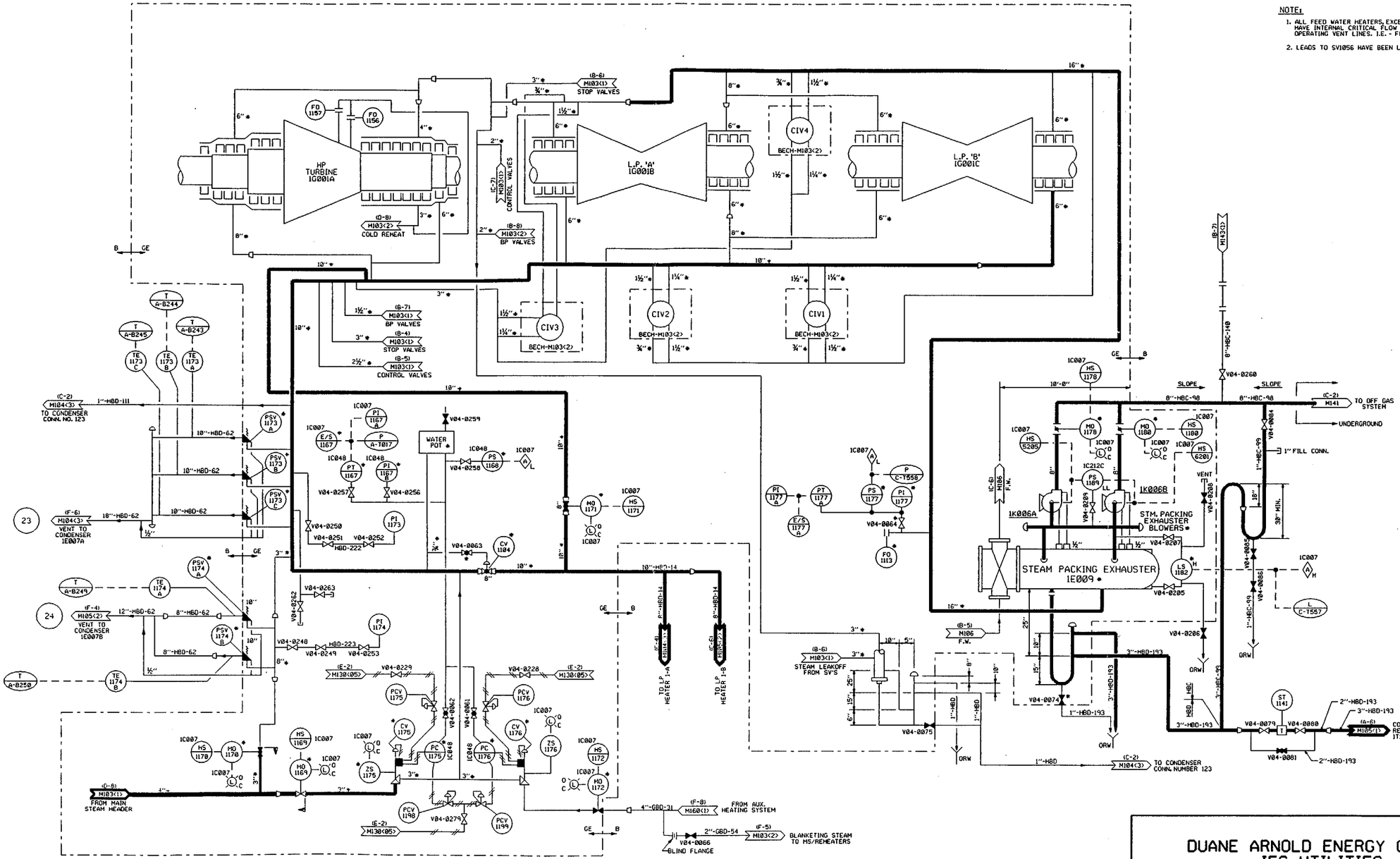

TURBINE STEAM SEAL REGULATOR 1S039

DUANE ARNOLD ENERGY CENTER
IES UTILITIES
UPDATED FINAL SAFETY ANALYSIS REPORT

P & ID
TURBINE EXTRACTION STEAM AND DRAINS

FIGURE 10.4-1 SH. 4

BECH-M104<1> REV. 13

REVISION 15 - 5/00

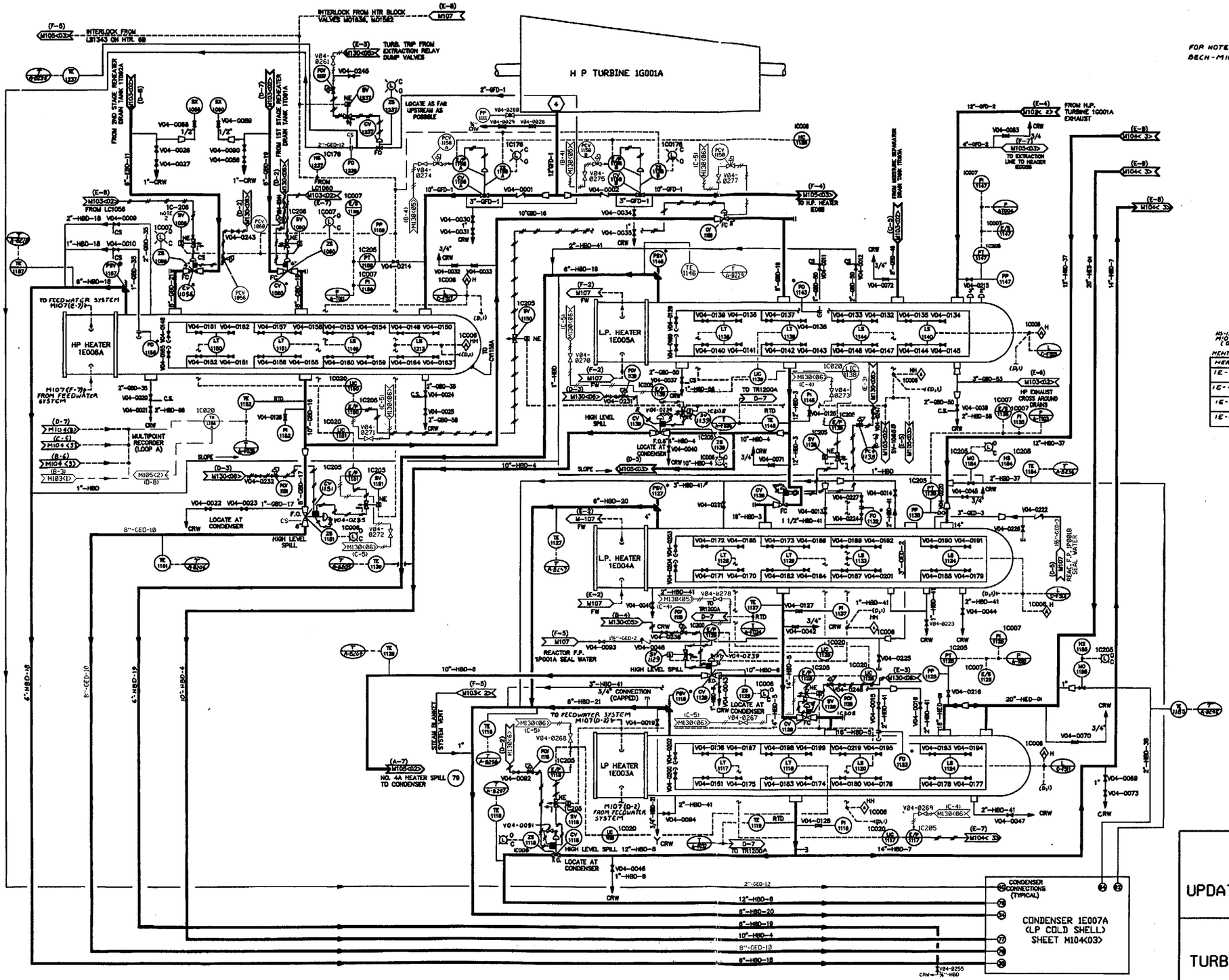

FOR NOTES SEE BECH-M104<1>

SEE TABLE

HEATER LEVEL ALARM INTERLOCK

HEATER	HI	HI-HI
1E-3A	LS-1124 (B,2)	LS-1130 (B,5)
1E-4A	LS-1128 (C,2)	LS-1133 (C,5)
1E-5A	LS-1184 (D,2)	LS-1144 (D,5)
1E-6A	LS-1189 (D,2)	LS-1213 (D,5)

DUANE ARNOLD ENERGY CENTER
IES UTILITIES
UPDATED FINAL SAFETY ANALYSIS REPORT

P & ID
TURBINE EXTRACTION STEAM AND DRAINS

FIGURE 10.4-1 SH. 5

BECH-M104<2> REV. 14

REVISION 15 - 5/00

HEATER LEVEL ALARM INTERLOCK

HEATER	HI	HI-HI
1E-1A	LS-1100 (C,D)	LS-1102 (C,D)
1E-2A	LS-1108 (C,D)	LS-1107 (C,D)

* BASKET TIP PROBES IN EXHAUST NECK LP TURBINE

LP TURBINE	QUADRANT	ROOT VALVE	PRESSURE POINT
1G001B	NE	V04-0281	PP1113
1G001B	NW	V04-0282	PP1114
1G001B	SE	V04-0283	PP1115
1G001B	SW	V04-0284	PP1116
1G001C	NE	V04-0285	PP1117
1G001C	NW	V04-0286	PP1118
1G001C	SE	V04-0287	PP1119
1G001C	SW	V04-0288	PP1120

* INSTRUMENT USED FOR TESTING ONLY. LOCATED UNDER LP A/B SKIRT.

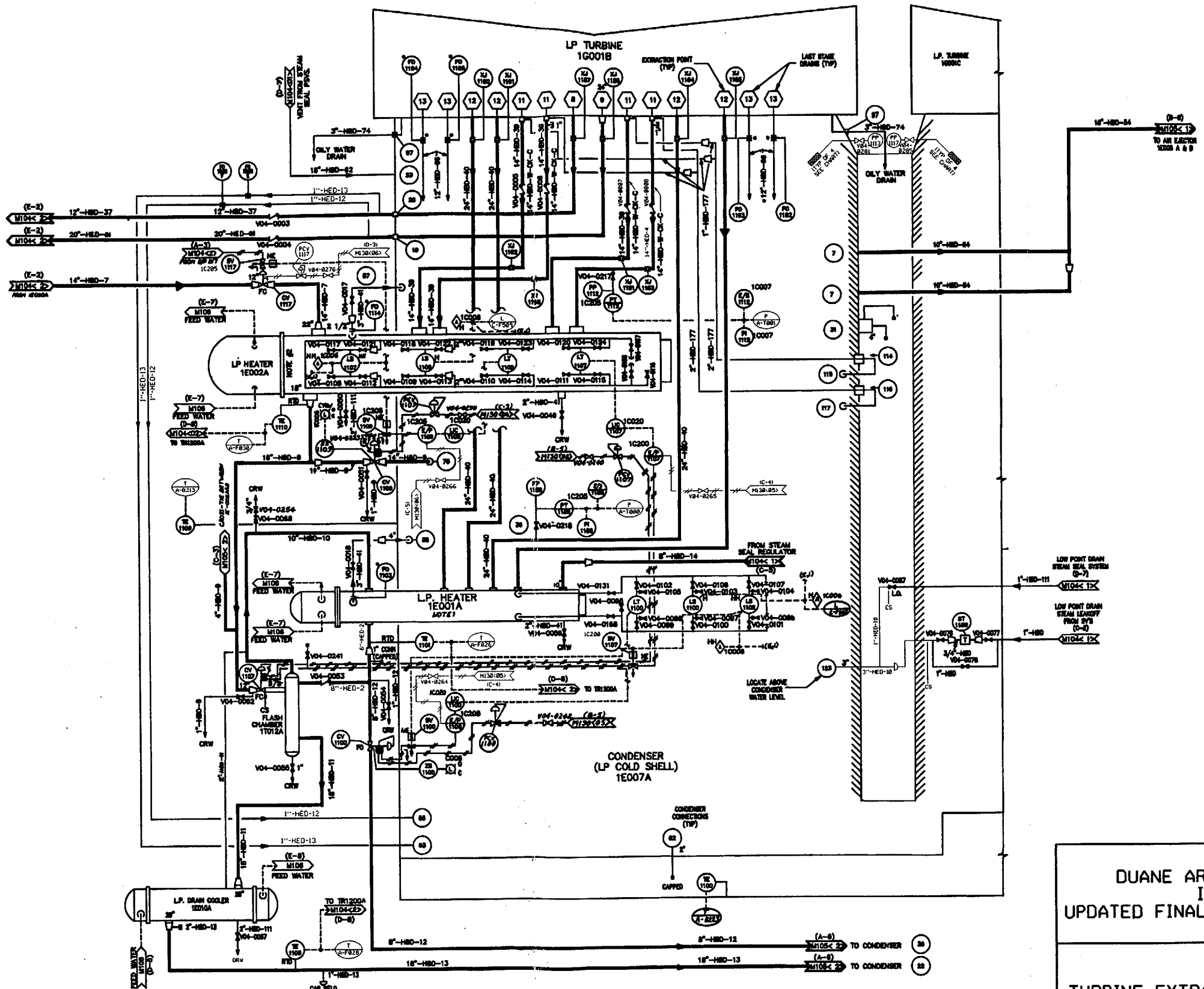

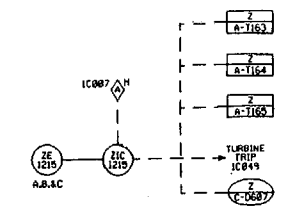

TURB. THRUST BEARING WEAR DETECTION

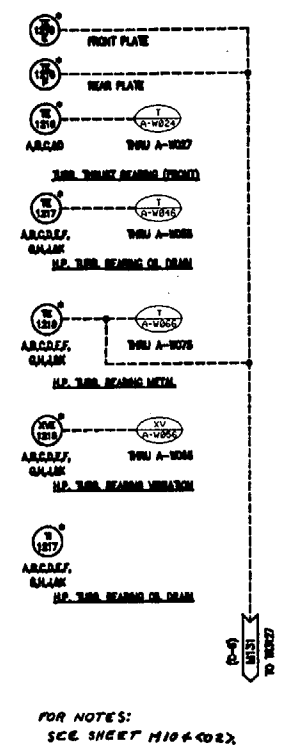

FOR NOTES: SEE SHEET M104<002>

DUANE ARNOLD ENERGY CENTER
IES UTILITIES
UPDATED FINAL SAFETY ANALYSIS REPORT

P & ID
TURBINE EXTRACTION STEAM AND DRAINS

FIGURE 10.4-1 SH. 6

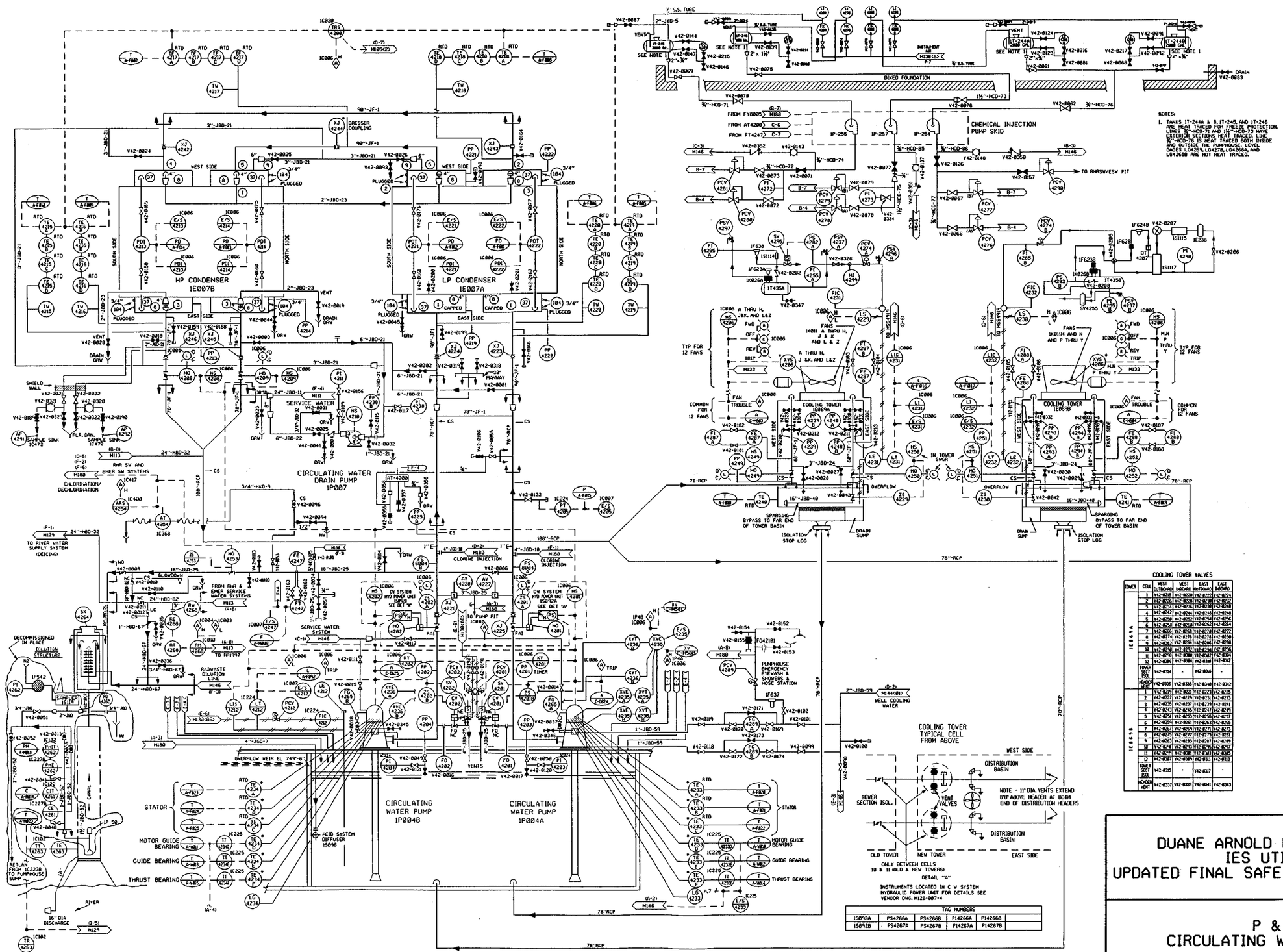

COOLING TOWER VALVES

TOWER	COLL	WEST OUTBOARD	WEST INBOARD	EAST OUTBOARD	EAST INBOARD
1E006A	1	V42-0228	V42-0228	V42-0222	V42-0224
	2	V42-0226	V42-0226	V42-0220	V42-0222
	3	V42-0234	V42-0236	V42-0230	V42-0232
	4	V42-0242	V42-0244	V42-0238	V42-0240
	5	V42-0250	V42-0252	V42-0246	V42-0248
	6	V42-0258	V42-0260	V42-0254	V42-0256
	7	V42-0266	V42-0268	V42-0262	V42-0264
	8	V42-0274	V42-0276	V42-0270	V42-0272
	9	V42-0282	V42-0284	V42-0278	V42-0280
	10	V42-0290	V42-0292	V42-0286	V42-0288
	11	V42-0298	V42-0300	V42-0294	V42-0296
	12	V42-0306	V42-0308	V42-0302	V42-0304
	TOWER SECT ISOL	V42-0314	-	V42-0316	-
	HEADER VENT	V42-0305	V42-0338	V42-0340	V42-0342
1E006B	1	V42-0219	V42-0223	V42-0221	V42-0225
	2	V42-0227	V42-0229	V42-0231	V42-0233
	3	V42-0235	V42-0237	V42-0239	V42-0241
	4	V42-0243	V42-0245	V42-0247	V42-0249
	5	V42-0251	V42-0253	V42-0255	V42-0257
	6	V42-0259	V42-0261	V42-0263	V42-0265
	7	V42-0267	V42-0269	V42-0271	V42-0273
	8	V42-0275	V42-0277	V42-0279	V42-0281
	9	V42-0283	V42-0285	V42-0287	V42-0289
	10	V42-0291	V42-0293	V42-0295	V42-0297
	11	V42-0299	V42-0301	V42-0303	V42-0305
	12	V42-0307	V42-0309	V42-0311	V42-0313
	TOWER SECT ISOL	V42-0315	-	V42-0317	-
	HEADER VENT	V42-0337	V42-0339	V42-0341	V42-0343

DUANE ARNOLD ENERGY CENTER
IES UTILITIES
UPDATED FINAL SAFETY ANALYSIS REPORT

P & ID
CIRCULATING WATER SYSTEM

FIGURE 10.4-2

BECH-M142 REV. 64

REVISION 15 - 5/00

REF	TANK 1T013E (A-D TYP.)
DET A	1713E (A-D TYP.)
DET A	1714E (A-D TYP.)
DET A	1716E (A-D TYP.)
DET B	1717E (A-D TYP.)
DET C	1718E (A-D TYP.)
DET B	1719E (A-D TYP.)
DET B	1721E (A-D TYP.)
DET A	1723E (A-D TYP.)
DET D	1724E (A-D TYP.)
HS	1915E (A-D TYP.)
SY	1610E (A-D TYP.)
SY	1724E (A-D TYP.)
POT	1727E (A-D TYP.)
POT	1727E (A-D TYP.)
POS	1727E (A-D TYP.)
PI	1728E (A-D TYP.)
PT	1728E (A-D TYP.)
PI	1762E (A-D TYP.)
FS	1730E (A-D TYP.)
PDIS	1731E (A-D TYP.)
FE	1732E (A-D TYP.)
FT	1732E (A-D TYP.)
FS	1732E (A-D TYP.)
FI	1732E (A-D TYP.)
FIC	1732E (A-D TYP.)
FS	1733E (A-D TYP.)
HS	1733E (A-D TYP.)
PP	1739E (A-D TYP.)
PP	1757E (A-D TYP.)
SUS	1789E (A-D TYP.)
FQI	1732E (A-D TYP.)
PCV	1732E (A-D TYP.)
PCV	1726E (A-D TYP.)
PCV	1727E (A-D TYP.)
FO	1722E (A-D TYP.)
PI	1757E (A-D TYP.)
PSIPS(4)	1765E (A-D TYP.)

REF \ TANK	1T013E	1T013D	1T013C	1T013B	1T013A
POT 1727(.)	V08-0152	V08-0177	V08-0224	V08-0154	V08-0158
POIS 1731(.)	V08-0196	V08-0187	V08-0214	V08-0155	V08-0163
PI 1762(.)	V08-0192	V08-0175	V08-0222	V08-0228	V08-0157
PI 1757(.)	V08-0193	V08-0178	V08-0220	V08-0206	V08-0159
PP 1739(.)	V08-0197	V08-0188	V08-0221	V08-0207	V08-0162
POIS 1731(.)	V08-0198	V08-0174	V08-0226	V08-0213	V08-0164
PDT 1727(.)	V08-0199	V08-0182	V08-0219	V08-0218	V08-0165
FT 1732(.)	V08-0231	V08-0184	V08-0215	V08-0211	V08-0167
	V08-0202	V08-0185	V08-0216	V08-0212	V08-0168
PS 1765(.)	V08-0203	V08-0186	V08-0223	V08-0156	V08-0164
POT 1727(.)	V08-0200	V08-0183	V08-0218	V08-0209	V08-0166
1ST COR. TO AIR 1559	V08-0188	V08-0181	V08-0217	V08-0208	V08-0237
AIR 1559 TO 2ND COR.	V08-0194	V08-0173	V08-0230	V08-0236	V08-0158
2ND COR. TO AIR 1559	V08-0195	V08-0239	V08-0231	V08-0238	V08-0161
AIR 1559 TO 3RD COR.	V08-0204	V08-0241	V08-0229	V08-0240	V08-0248
3RD COR. TO AIR 1559	V08-0205	V08-0247	V08-0246	V08-0245	V08-0244
AIR 1559 TO OVERFLOW	X	X	X	V08-0242	X
AIR 1559 TO SOLKA-FLOC	V08-0253	V08-0252	V08-0251	V08-0250	V08-0249

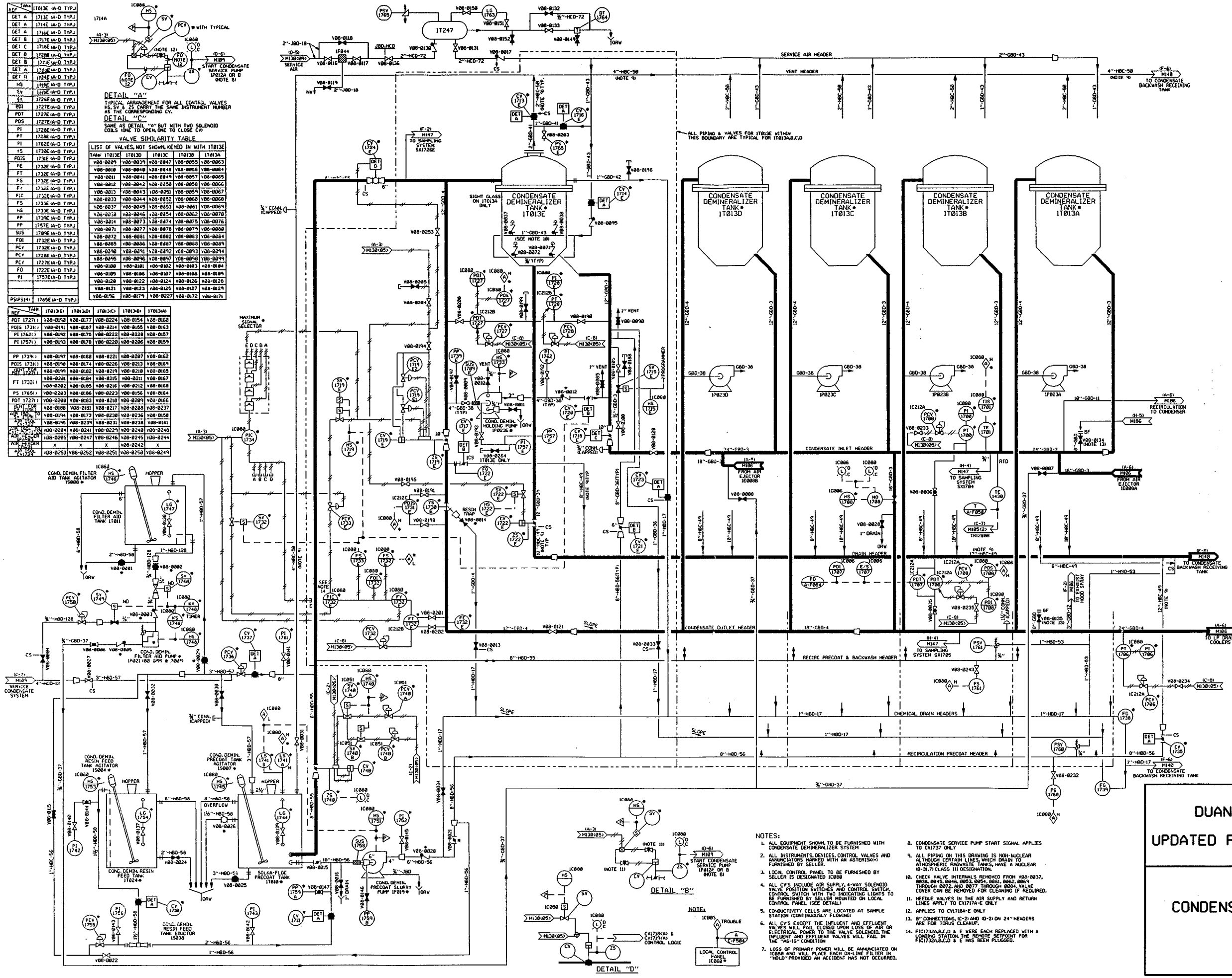

DUANE ARNOLD ENERGY CENTER
IES UTILITIES
UPDATED FINAL SAFETY ANALYSIS REPORT

P & ID
CONDENSATE DEMINERALIZER SYSTEM

FIGURE 10.4-3

BECH-M108 REV. 45

REVISION 15 - 5/00

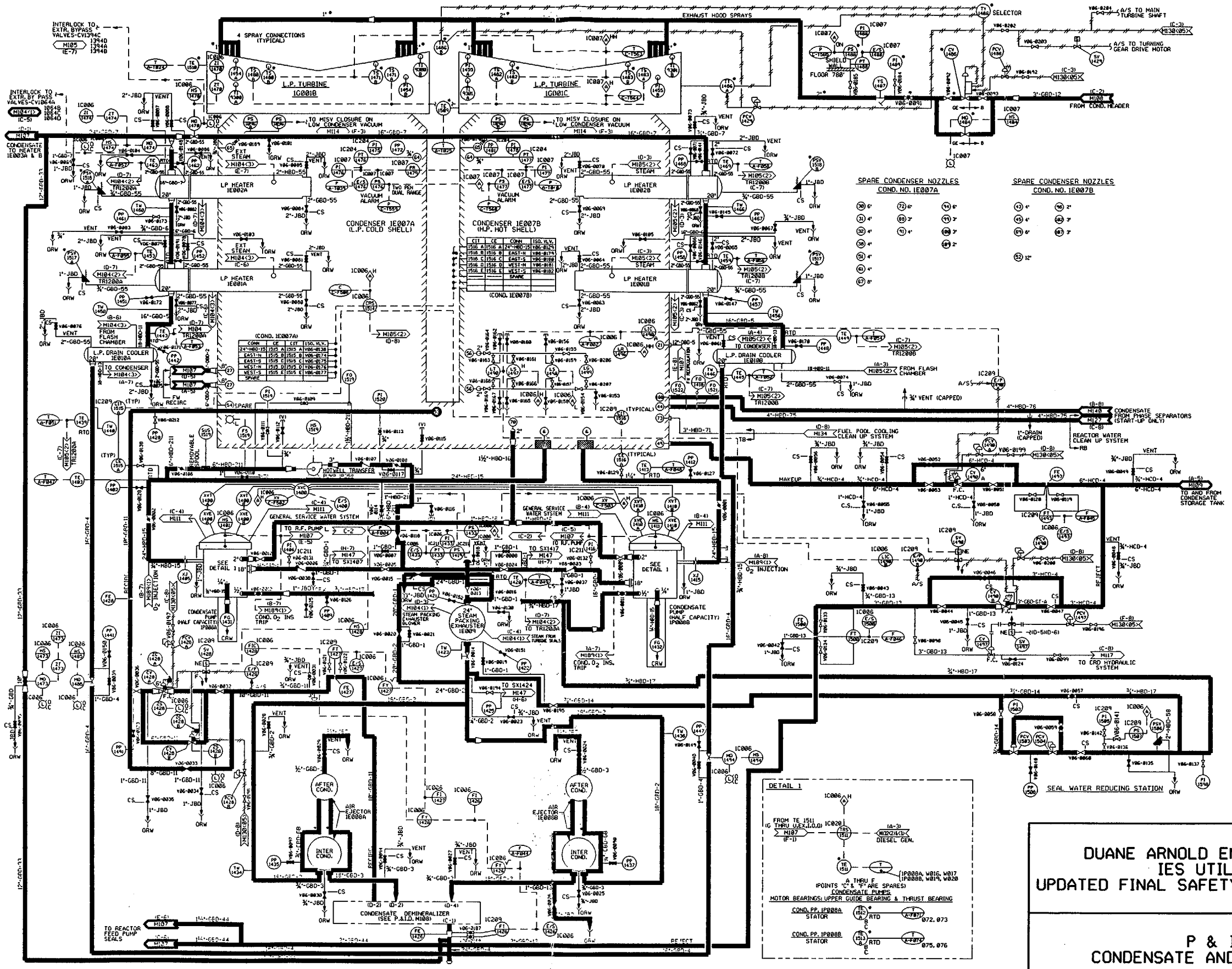

DUANE ARNOLD ENERGY CENTER
IES UTILITIES
UPDATED FINAL SAFETY ANALYSIS REPORT

P & ID
CONDENSATE AND FEEDWATER

FIGURE 10.4-4 SH. 1

BECH-M106 REV. 46

REVISION 15 - 5/00

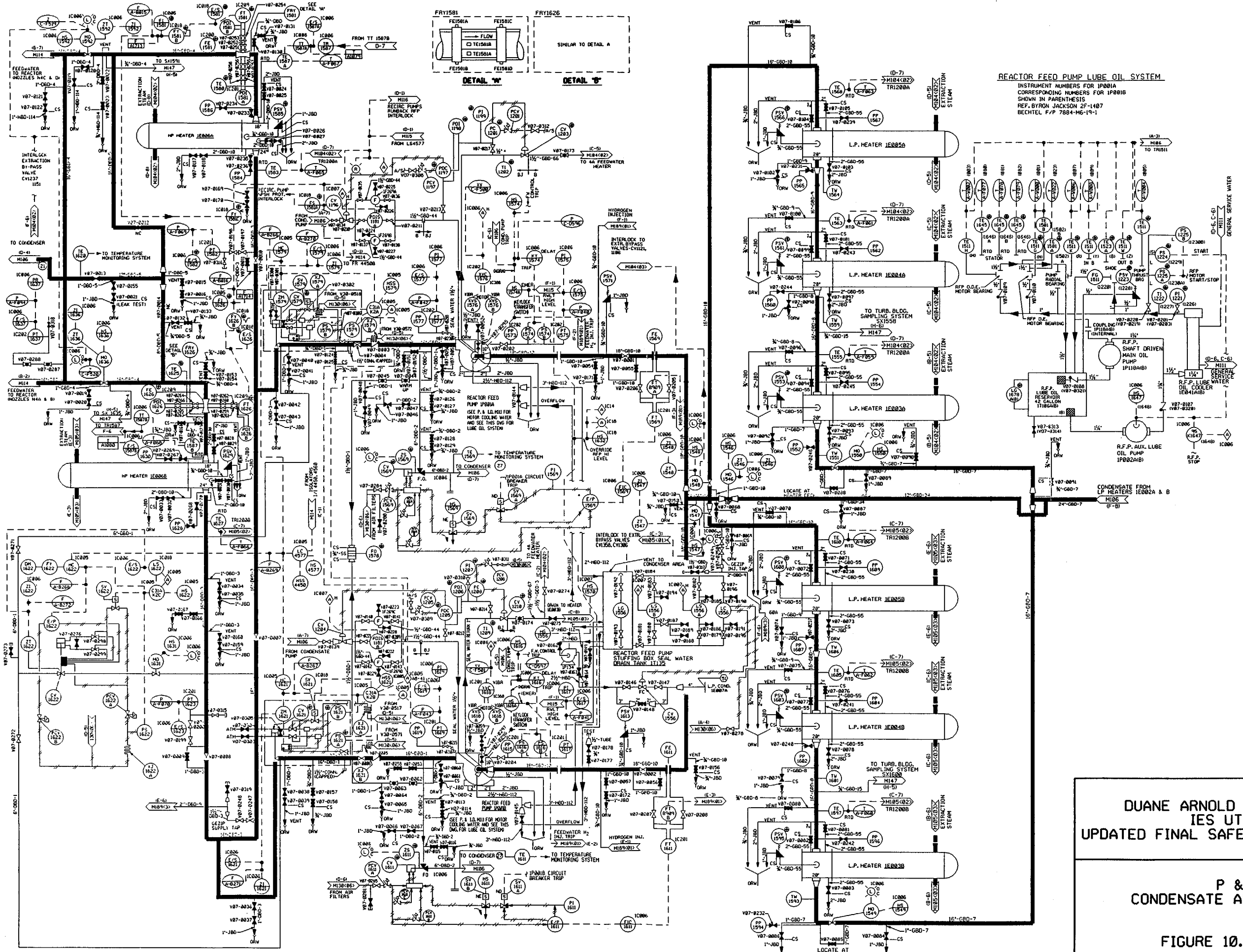

BECH-M107 REV. 71

DUANE ARNOLD ENERGY CENTER
IES UTILITIES
UPDATED FINAL SAFETY ANALYSIS REPORT

P & ID
CONDENSATE AND FEEDWATER

FIGURE 10.4-4 SH. 2

REVISION 15 - 5/00

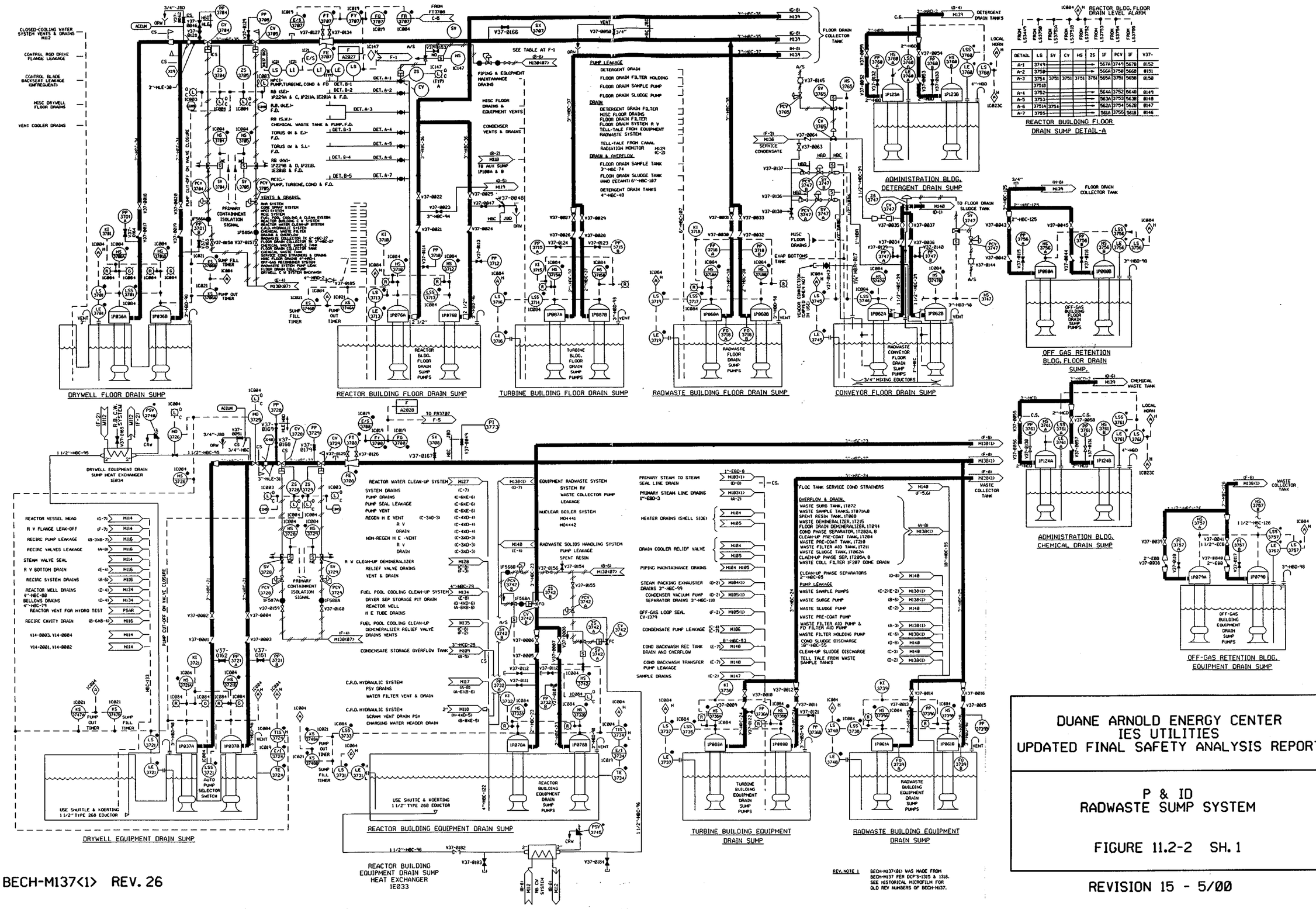

BECH-M137<1> REV. 26

DUANE ARNOLD ENERGY CENTER
IES UTILITIES
UPDATED FINAL SAFETY ANALYSIS REPORT

P & ID
RADWASTE SUMP SYSTEM

FIGURE 11.2-2 SH. 1

REVISION 15 - 5/00

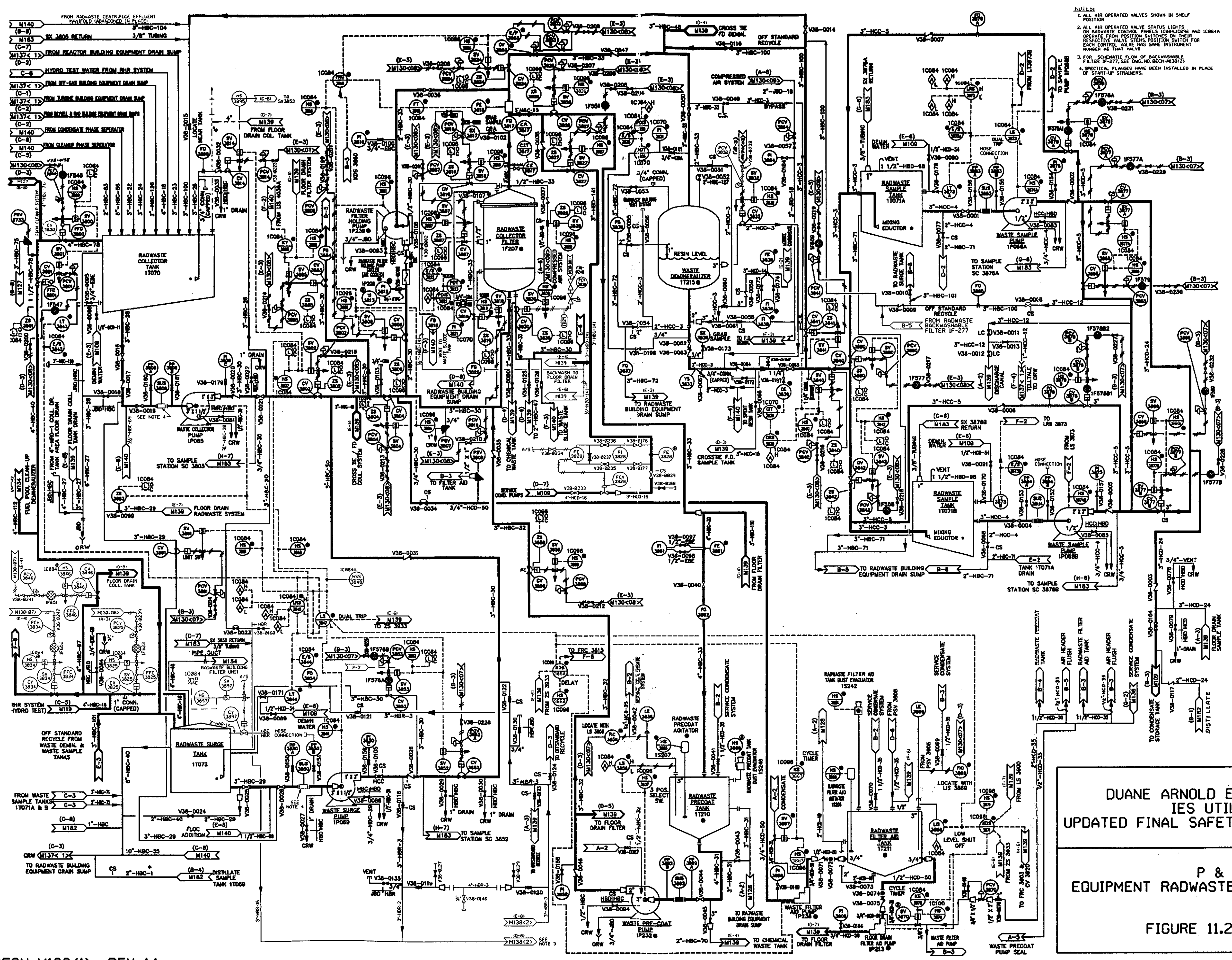

DUANE ARNOLD ENERGY CENTER
IES UTILITIES
UPDATED FINAL SAFETY ANALYSIS REPORT

P & ID
EQUIPMENT RADWASTE SYSTEM (CLOSED)

FIGURE 11.2-3 SH. 1

REVISION 15 - 5/00

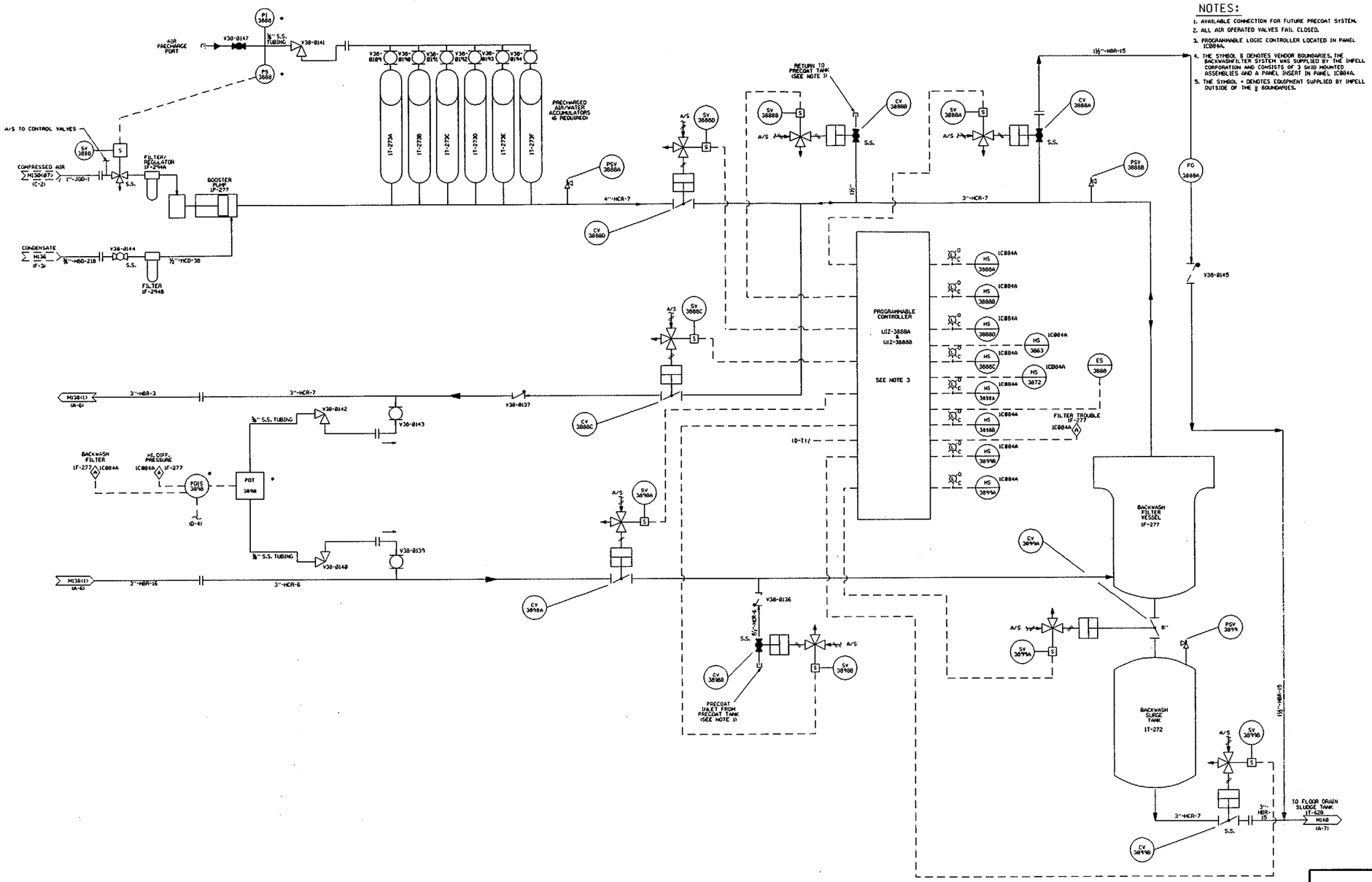

NOTES:

1. AVAILABLE CONNECTION FOR FUTURE PRECOAT SYSTEM.
2. ALL AIR OPERATED VALVES FAIL CLOSED.
3. PROGRAMMABLE LOGIC CONTROLLER LOCATED IN PANEL IC884A.
4. THE SYMBOL ‖ DENOTES VENDOR BOUNDARIES. THE BACKWASHFILTER SYSTEM WAS SUPPLIED BY THE IMPELL CORPORATION AND CONSISTS OF 3 SKID MOUNTED ASSEMBLIES AND A PANEL INSERT IN PANEL IC884A.
5. THE SYMBOL * DENOTES EQUIPMENT SUPPLIED BY IMPELL OUTSIDE OF THE ‖ BOUNDARIES.

DUANE ARNOLD ENERGY CENTER
IES UTILITIES
UPDATED FINAL SAFETY ANALYSIS REPORT

P & ID
EQUIPMENT RADWASTE SYSTEM (CLOSED)

FIGURE 11.2-3 SH. 2

BECH-M138<2> REV. 2

REVISION 15 - 5/00

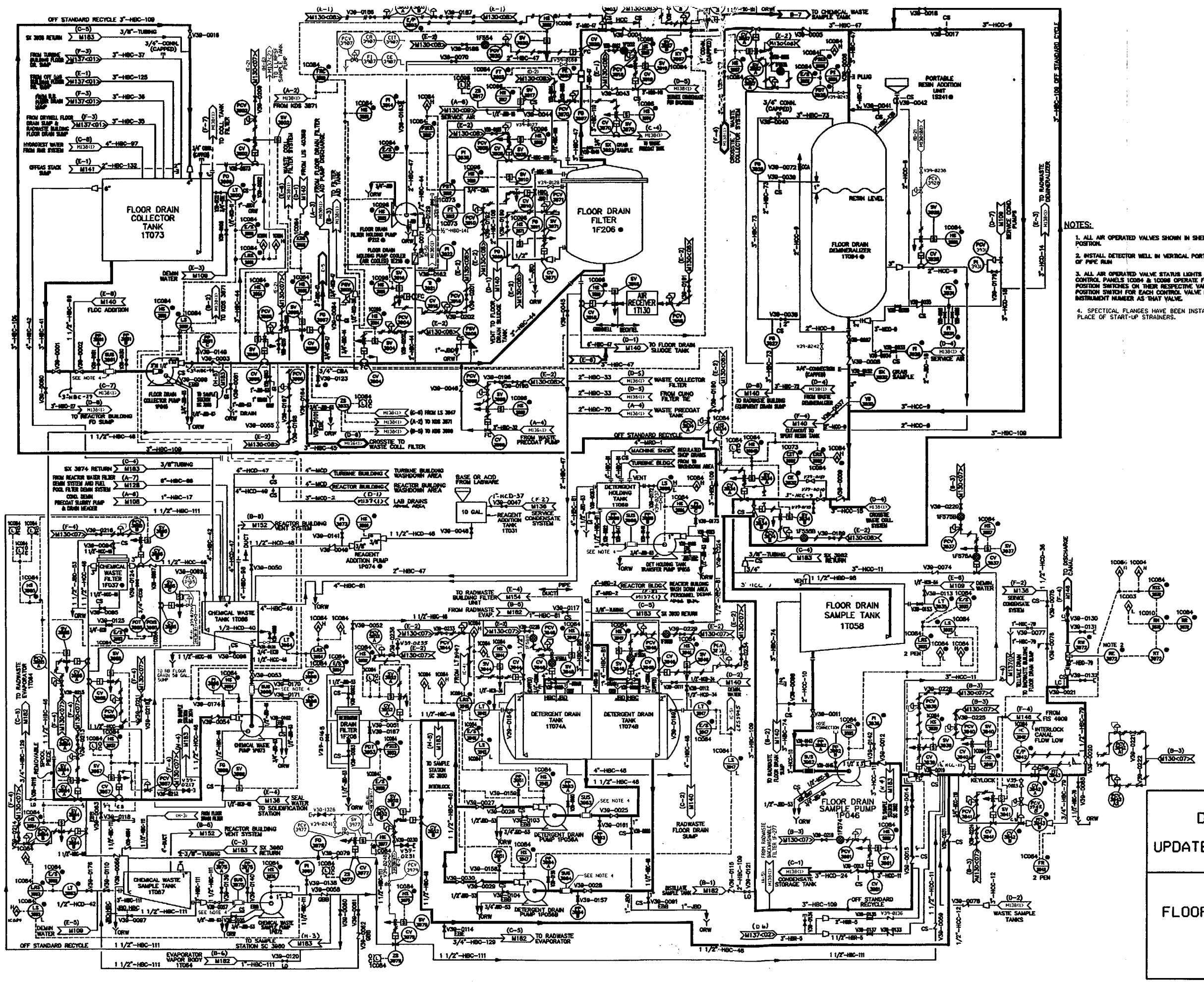

NOTES:

1. ALL AIR OPERATED VALVES SHOWN IN SHELF POSITION.
2. INSTALL DETECTOR WELL IN VERTICAL PORTION OF PIPE RUN
3. ALL AIR OPERATED VALVE STATUS LIGHTS ON RADWASTE CONTROL PANELS 1C084 & 1C086 OPERATE FROM POSITION SWITCHES ON THEIR RESPECTIVE VALVE STEMS. POSITION SWITCH FOR EACH CONTROL VALVE HAS SAME INSTRUMENT NUMBER AS THAT VALVE.
4. SPECTICAL FLANGES HAVE BEEN INSTALLED IN PLACE OF START-UP STRAINERS.

DUANE ARNOLD ENERGY CENTER
IES UTILITIES
UPDATED FINAL SAFETY ANALYSIS REPORT

P & ID
FLOOR DRAIN RADWASTE SYSTEM (OPEN)

FIGURE 11.2-4

BECH-M139 REV. 49

REVISION 15 - 5/00

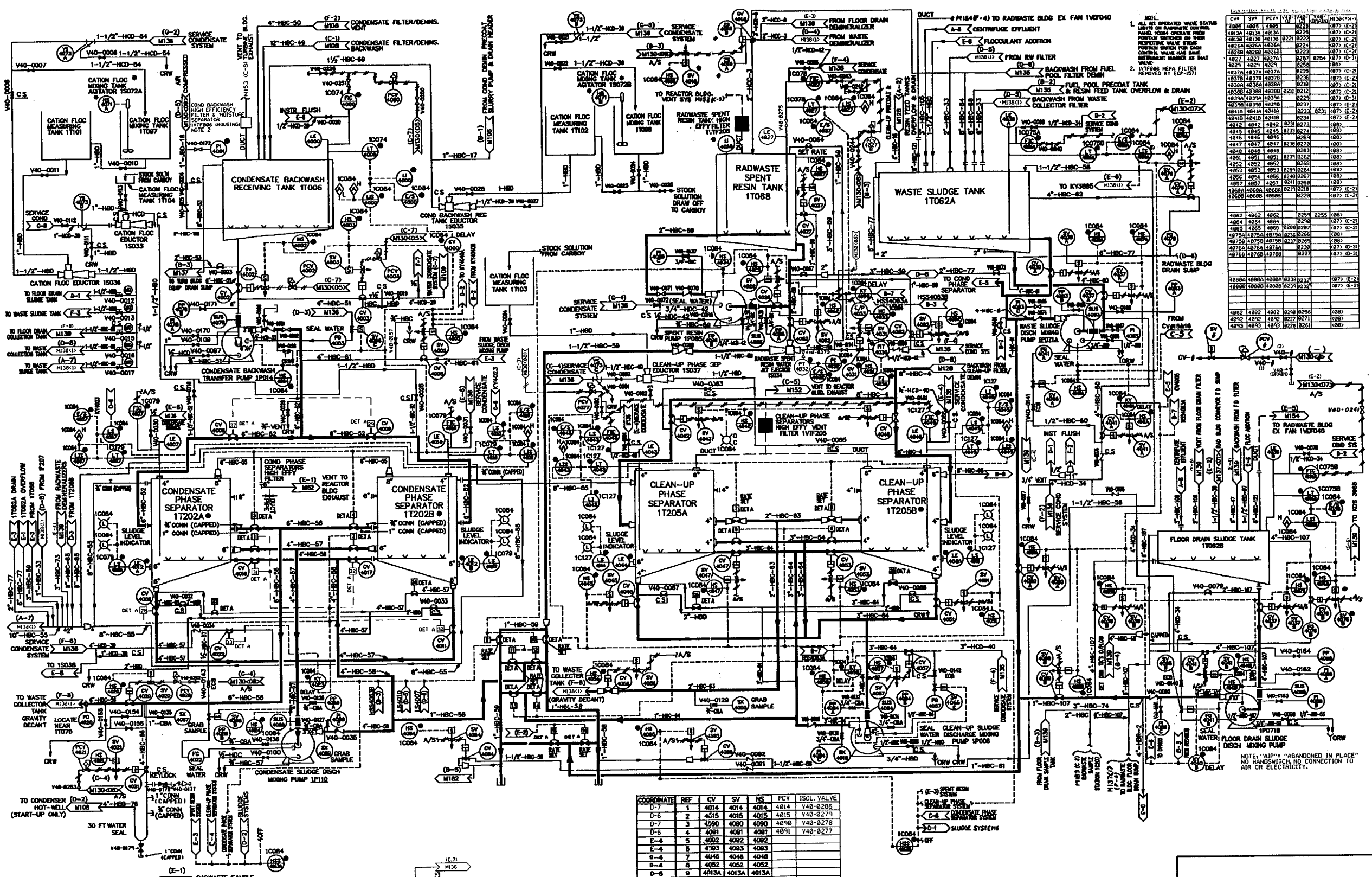

COORDINATE	REF	CV	SV	HS	PCV	ISOL. VALVE
D-7	1	4014	4014	4014	4014	V40-0286
D-6	2	4015	4015	4015	4015	V40-0279
D-7	3	4090	4090	4090	4090	V40-0278
D-6	4	4091	4091	4091	4091	V40-0277
E-4	5	4092	4092	4092		
E-4	6	4093	4093	4093		
D-4	7	4046	4046	4046		
D-4	8	4052	4052	4052		
D-5	9	4013A	4013A	4013A		
D-5	10	4013B	4013B	4013B		
D-5	11	4026A	4026A	4026A		
D-5	12	4026B	4026B	4026B		
C-5	13	4060A	4060A	4060A		
C-5	14	4060B	4060B	4060B		
C-5	15	4038A	4038A	4038A		
C-5	16	4038B	4038B	4038B		
B-5	17	4061A	4061A	AIP		
B-5	18	4061B	4061B	AIP		
B-5	19	4061C	4061C	AIP		
A-7	20	4079A	4079A	AIP		
A-7	21	4079B	4079B	AIP		
A-7	22	4079C	4079C	AIP		
C-7	23	4074A	4074A	4074A	4074A	V40-0285
C-6	24	4074B	4074B	4074B	4074B	V40-0282
D-4	25	4075A	4075A	4075A		
D-3	26	4075B	4075B	4075B		
D-7	27	4006	4006	4006	4006	V40-0287
C-8	28	4008	4008	4008	4008	V40-0284
D-6	29	4009	4009	4009	4009	V40-0280
C-6	30	4011	4011	4011	4011	V40-0283
C-7	31	4016	4016	4016	4016	V40-0288
C-6	32	4017	4017	4017	4017	V40-0281
C-7	33	4022	4022	4022	4022	V40-0276

DUANE ARNOLD ENERGY CENTER
IES UTILITIES
UPDATED FINAL SAFETY ANALYSIS REPORT

P & ID
RADWASTE SOLIDS HANDLING SYSTEM

FIGURE 11.2-5

BECH-M140 REV. 50

REVISION 15 - 5/00

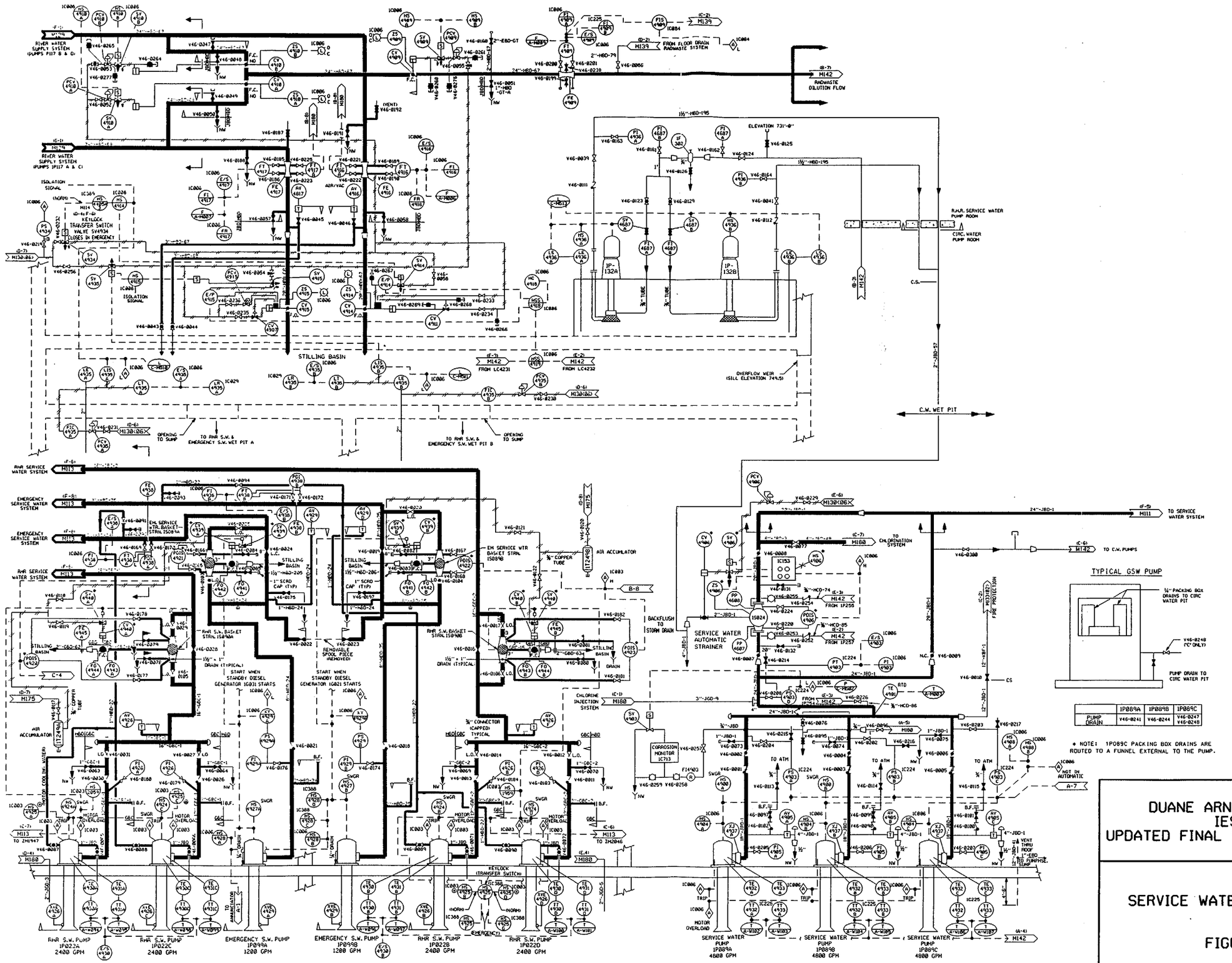

	1P089A	1P089B	1P089C
PUMP DRAIN	V46-0241	V46-0244	V46-0247 V46-0248

DUANE ARNOLD ENERGY CENTER
IES UTILITIES
UPDATED FINAL SAFETY ANALYSIS REPORT

P & ID
SERVICE WATER SYSTEM PUMPHOUSE

FIGURE 11.2-6

BECH-M146 REV. 63

REVISION 15 - 5/00

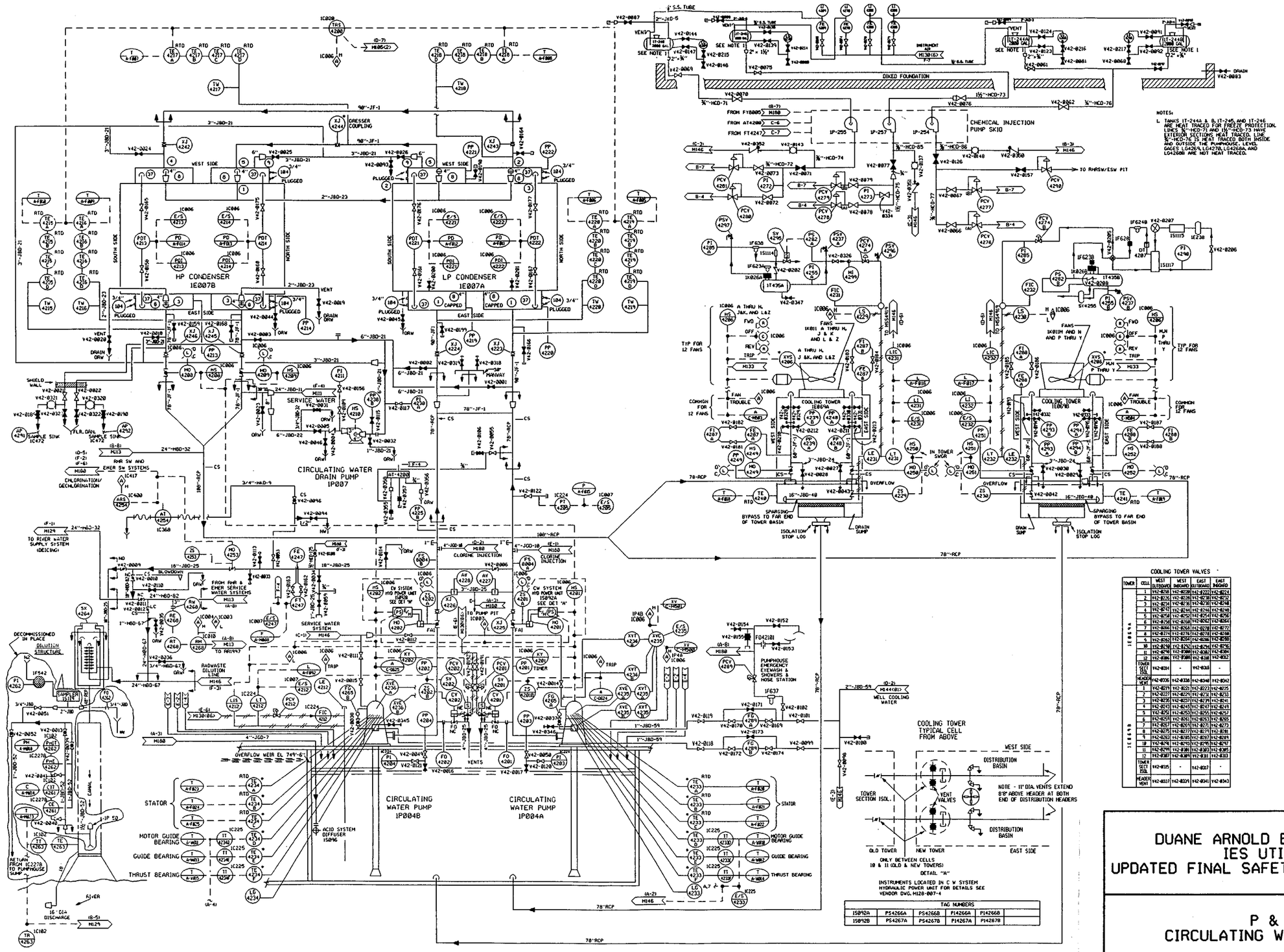

COOLING TOWER VALVES

TOWER	CELL	WEST OUTBOARD	WEST INBOARD	EAST OUTBOARD	EAST INBOARD
1E006A	1	V42-8218	V42-8220	V42-8222	V42-8224
	2	V42-8219	V42-8221	V42-8223	V42-8225
	3	V42-8234	V42-8236	V42-8238	V42-8240
	4	V42-8242	V42-8244	V42-8246	V42-8248
	5	V42-8258	V42-8260	V42-8254	V42-8256
	6	V42-8250	V42-8252	V42-8262	V42-8264
	7	V42-8266	V42-8268	V42-8270	V42-8272
	8	V42-8274	V42-8276	V42-8278	V42-8280
	9	V42-8282	V42-8284	V42-8286	V42-8288
	10	V42-8290	V42-8292	V42-8294	V42-8296
	11	V42-8298	V42-8300	V42-8302	V42-8304
	12	V42-8306	V42-8308	V42-8310	V42-8312
	TOWER SECT ISOL	V42-8314	-	V42-8316	-
	HEADER VENT	V42-8336	V42-8338	V42-8340	V42-8342
1E006B	1	V42-8219	V42-8221	V42-8223	V42-8225
	2	V42-8227	V42-8229	V42-8231	V42-8233
	3	V42-8235	V42-8237	V42-8239	V42-8241
	4	V42-8243	V42-8245	V42-8247	V42-8249
	5	V42-8251	V42-8253	V42-8255	V42-8257
	6	V42-8259	V42-8261	V42-8263	V42-8265
	7	V42-8267	V42-8269	V42-8271	V42-8273
	8	V42-8275	V42-8277	V42-8279	V42-8281
	9	V42-8283	V42-8285	V42-8287	V42-8289
	10	V42-8291	V42-8293	V42-8295	V42-8297
	11	V42-8299	V42-8301	V42-8303	V42-8305
	12	V42-8307	V42-8309	V42-8311	V42-8313
	TOWER SECT ISOL	V42-8315	-	V42-8317	-
	HEADER VENT	V42-8337	V42-8339	V42-8341	V42-8343

DUANE ARNOLD ENERGY CENTER
IES UTILITIES
UPDATED FINAL SAFETY ANALYSIS REPORT

P & ID
CIRCULATING WATER SYSTEM

FIGURE 11.2-7

BECH-M142 REV. 64

REVISION 15 - 5/00

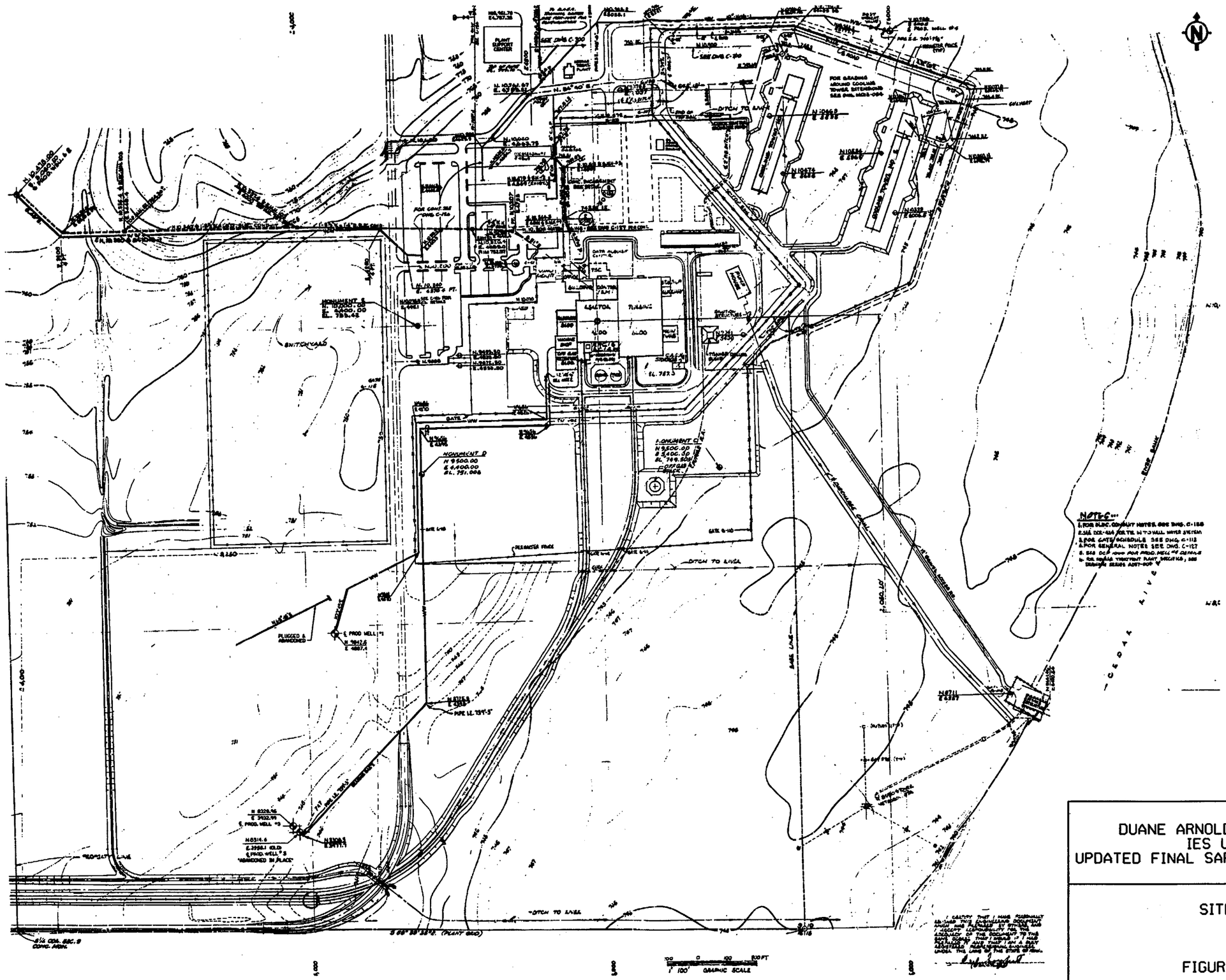

DUANE ARNOLD ENERGY CENTER
IES UTILITIES
UPDATED FINAL SAFETY ANALYSIS REPORT

SITE PLAN

FIGURE 11.2-8

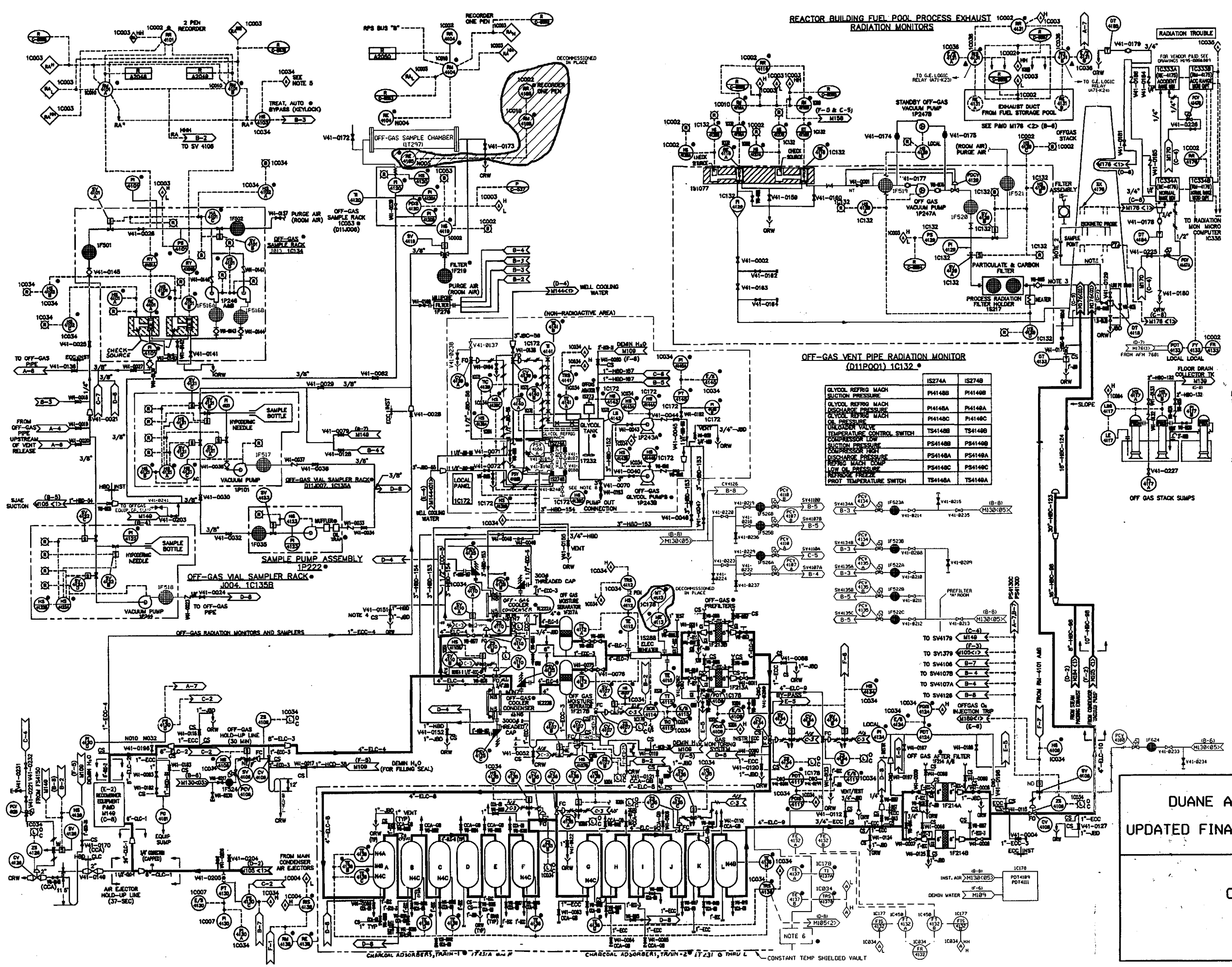

	IS274A	IS274B
GLYCOL REFRIG MACH SUCTION PRESSURE	PI4148B	PI4149B
GLYCOL REFRIG MACH DISCHARGE PRESSURE	PI4148A	PI4149A
GLYCOL REFRIG MACH OIL PRESSURE	PI4148C	PI4149C
UNLOADER VALVE TEMPERATURE CONTROL SWITCH	TS4148B	TS4149B
COMPRESSOR LOW SUCTION PRESSURE	PS4148B	PS4149B
COMPRESSOR HIGH DISCHARGE PRESSURE	PS4148A	PS4149A
REFRIG MACH COMP LOW OIL PRESSURE	PS4148C	PS4149C
REFRIGOR FREEZE PROT TEMPERATURE SWITCH	TS4148A	TS4149A

DUANE ARNOLD ENERGY CENTER
IES UTILITIES
UPDATED FINAL SAFETY ANALYSIS REPORT

P & ID
OFFGAS SYSTEM

FIGURE 11.3-2

BECH-M141 REV. 64

REVISION 15 - 5/00

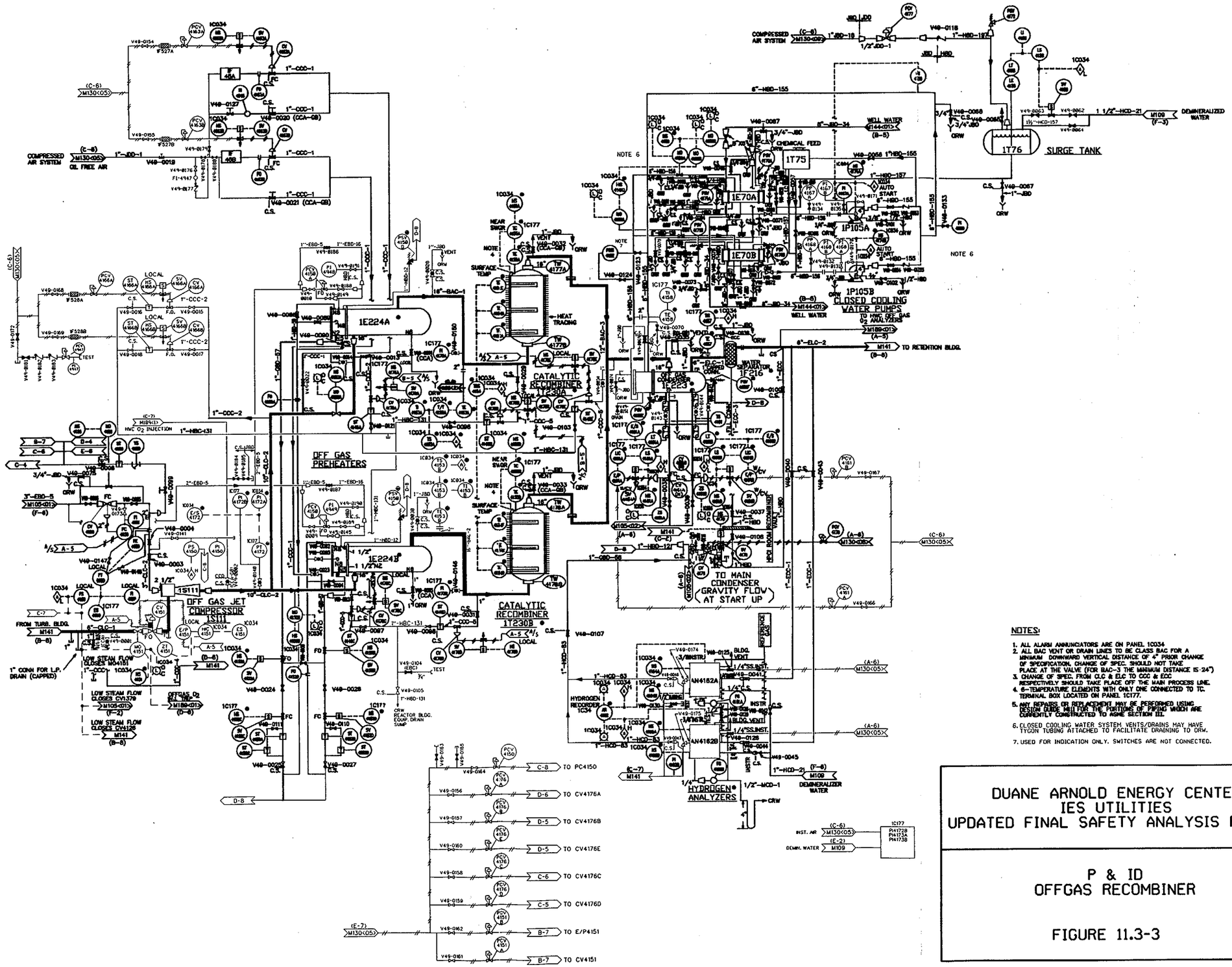

NOTES:

1. ALL ALARM ANNUNCIATORS ARE ON PANEL 1C034.
2. ALL BAC VENT OR DRAIN LINES TO BE CLASS BAC FOR A MINIMUM DOWNWARD VERTICAL DISTANCE OF 4" PRIOR CHANGE OF SPECIFICATION. CHANGE OF SPEC. SHOULD NOT TAKE PLACE AT THE VALVE (FOR BAC-3 THE MINIMUM DISTANCE IS 24")
3. CHANGE OF SPEC. FROM CLC & ELC TO CCC & ECC RESPECTIVELY SHOULD TAKE PLACE OFF THE MAIN PROCESS LINE.
4. 6-TEMPERATURE ELEMENTS WITH ONLY ONE CONNECTED TO TC. TERMINAL BOX LOCATED ON PANEL 1C177.
5. ANY REPAIRS OR REPLACEMENT MAY BE PERFORMED USING DESIGN GUIDE M41 FOR THE PORTIONS OF PIPING WHICH ARE CURRENTLY CONSTRUCTED TO ASME SECTION III.
6. CLOSED COOLING WATER SYSTEM VENTS/DRAINS MAY HAVE TYGON TUBING ATTACHED TO FACILITATE DRAINING TO ORW.
7. USED FOR INDICATION ONLY. SWITCHES ARE NOT CONNECTED.

DUANE ARNOLD ENERGY CENTER
IES UTILITIES
UPDATED FINAL SAFETY ANALYSIS REPORT

P & ID
OFFGAS RECOMBINER

FIGURE 11.3-3

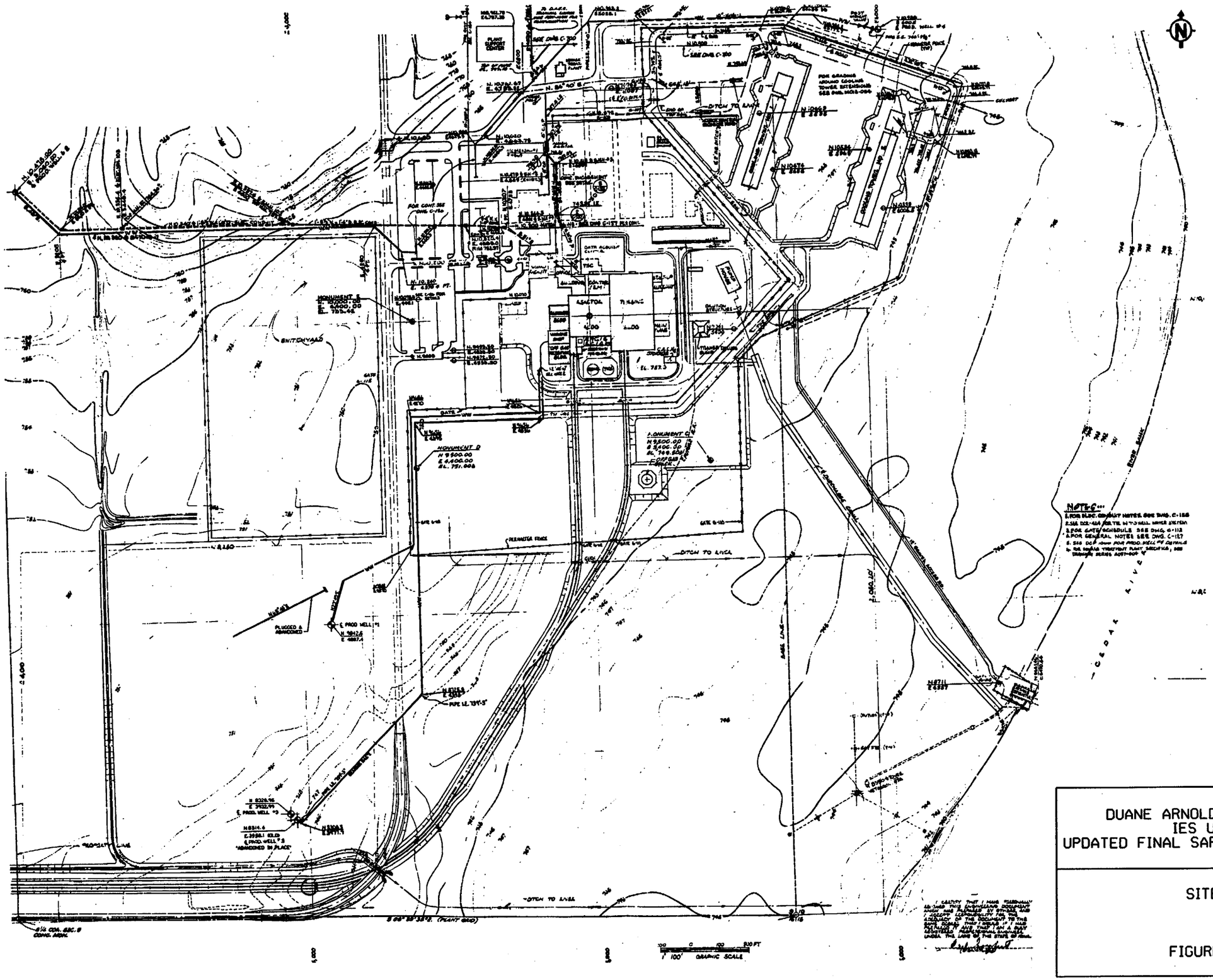

DUANE ARNOLD ENERGY CENTER
IES UTILITIES
UPDATED FINAL SAFETY ANALYSIS REPORT

SITE PLAN

FIGURE 11.3-6

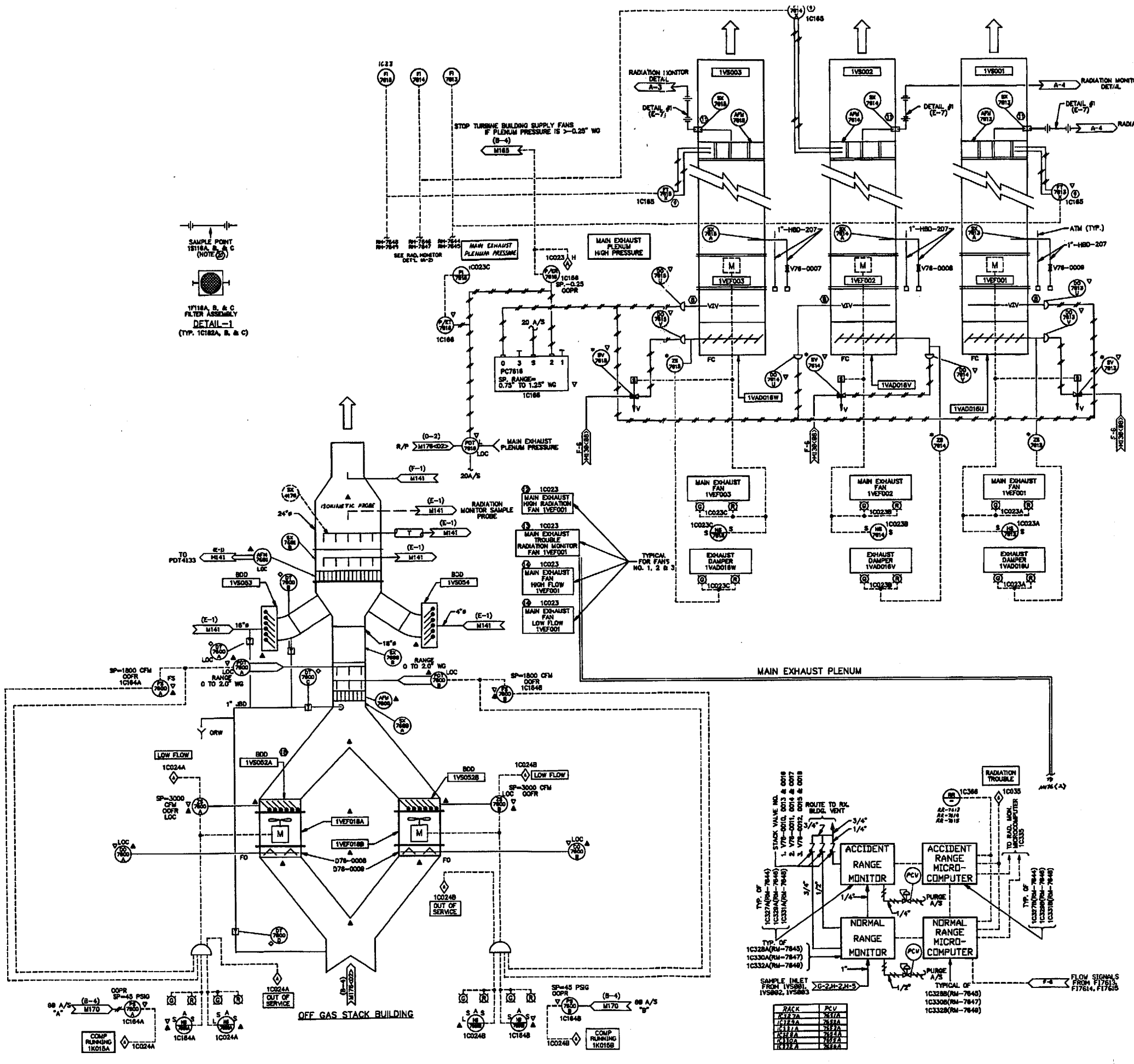

NOTES:

1.
2. TIME DELAY FOR LOV & HIGH FLOW ALARMS 30 SECONDS
3. MODE OF OPERATION No. 1
   BALANCE FUEL STORAGE POOL INTAKES (SEE DWG. M532)
   MODE OF OPERATION No. 2
   BALANCE FOR 7,300 CFM
   MODE OF OPERATION No. 3
   BALANCE FOR 7,300 CFM
   MODE OF OPERATION No. 4
   BALANCE FOR 4,625 CFM EACH
   MODE OF OPERATION No. 5 & 6
   BALANCE FOR 4,625 CFM EACH
   MODE OF OPERATION No. 7
   BALANCE REACTOR WELL POOL & DRYER SEPARATOR POOL EXHAUST SYSTEMS FOR EQUAL FLOW 9,250 CFM EACH. BALANCE REACTOR WELL POOL INTAKES (QUANTITY 8 FOR APPROXIMATELY 1,150 CFM EACH. CFM EACH).
4. STANDBY FAN TO START AUTOMATICALLY ON LOV FLOW
5.
6. HIGH VENTILATION POOL AREA EXHAUST DAMPER FULL OPEN. FLOOR LEVEL EXHAUST DAMPERS POSITIONED FOR DESIGN FLOW P.E.-PERIMETER EXHAUST, H.E.-HIGH BAY EXHAUST.
7. 30 SECOND TIME DELAY
8. VIV = VARIABLE INLET VANES
9. SEE REF. DWG. E423(1B)
10. 4 CHANNEL RECORDERS (PENS(3) RADIATION - 1 FLOW)
11. 3 CHANNEL RADIATION DETECTION SP.=TO MAX FLOW OF 67,000 CFM
12. 13 14 M176<1> (C-5 & D-6)
13. DUCT 8 ON M152
14. DUCT 2 ON M152
15. DAMPERS FUNC W/FANS 1VEF013A&B
16.
17. REPLACED UNDER DCR 1109

LEGEND

1) ⊐⊸□ =SCINTILLATOR DETECTOR
2) * -FURNISHED W/ASSOCIATED COMPONENT
3) ▲ -QA & SEISMIC CLASS 1
4) ▽ -CONTROLS SUPPLIED BY HVAC INST. CONT.
5) ◇ -SYMBOL DESIGNATES FIELD PURCHASED ITEMS

(20) (SEE DETAIL 1 THIS SHEET)
REMOVABLE SECTION SHALL BE PROVIDED NEAR THE SAMPLE PROBE FOR THE INSERTION OF A FILTER ASSEMBLY. THE FITTING ETC. SHALL PROVIDE SMOOTH TRANSITIONS WITHOUT DISCONTINUITIES OR REDUCING THE CROSS-SECTIONAL AREA OF THE FLOW STREAM.

(21) PRESSURE SENSING PORTS ARE INSTALLED AT THESE DAMPERS BY EMH-A3228MG.

DUANE ARNOLD ENERGY CENTER
IES UTILITIES
UPDATED FINAL SAFETY ANALYSIS REPORT

REACTOR BUILDING VENTILATION
RADIATION MONITORING

FIGURE 11.5-4 SH. 1

BECH-M176<1> REV. 13

REVISION 15 - 5/00

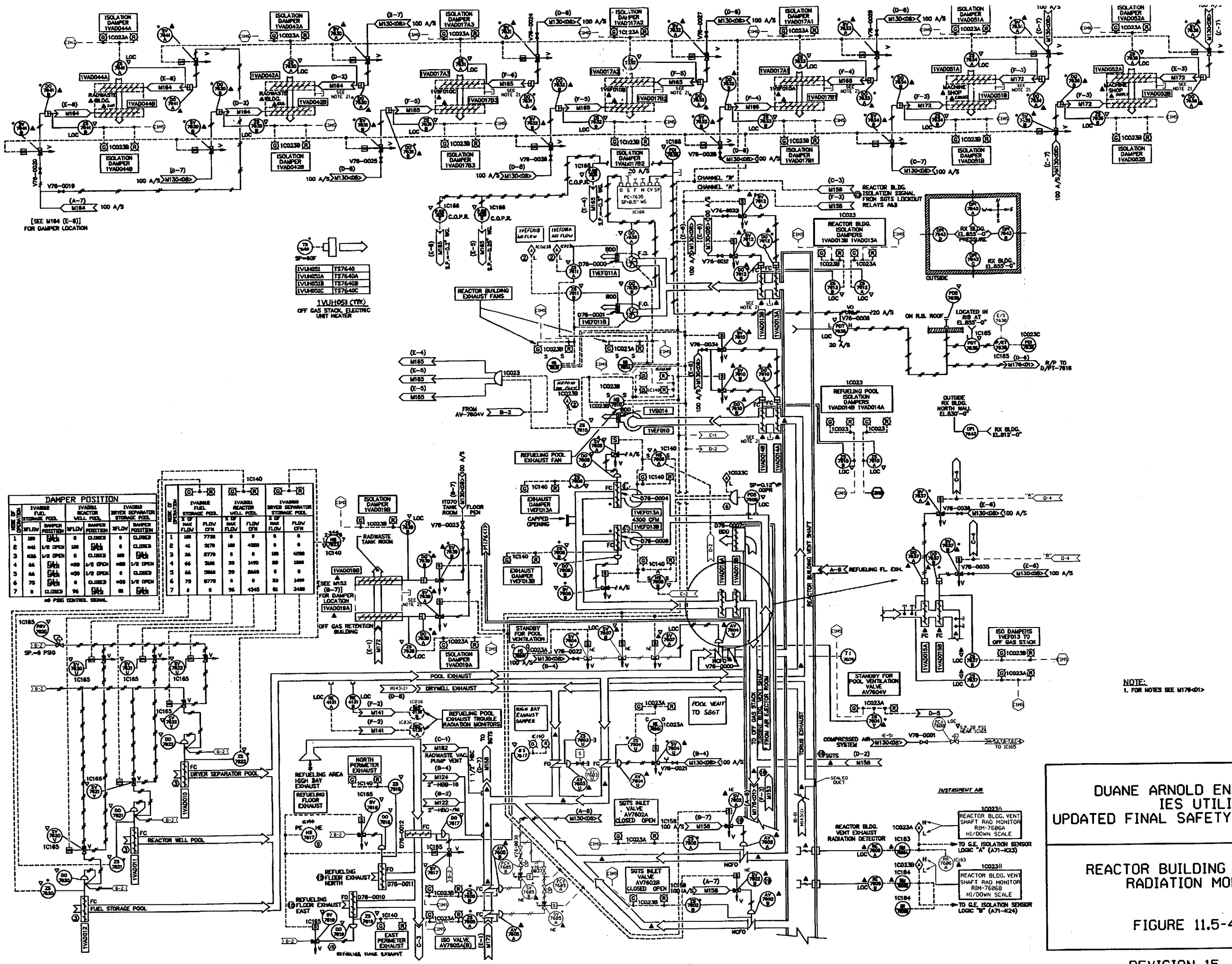

DUANE ARNOLD ENERGY CENTER
IES UTILITIES
UPDATED FINAL SAFETY ANALYSIS REPORT

REACTOR BUILDING VENTILATION RADIATION MONITORING

FIGURE 11.5-4 SH. 2

BECH-M176<2> REV. 16

REVISION 15 - 5/00

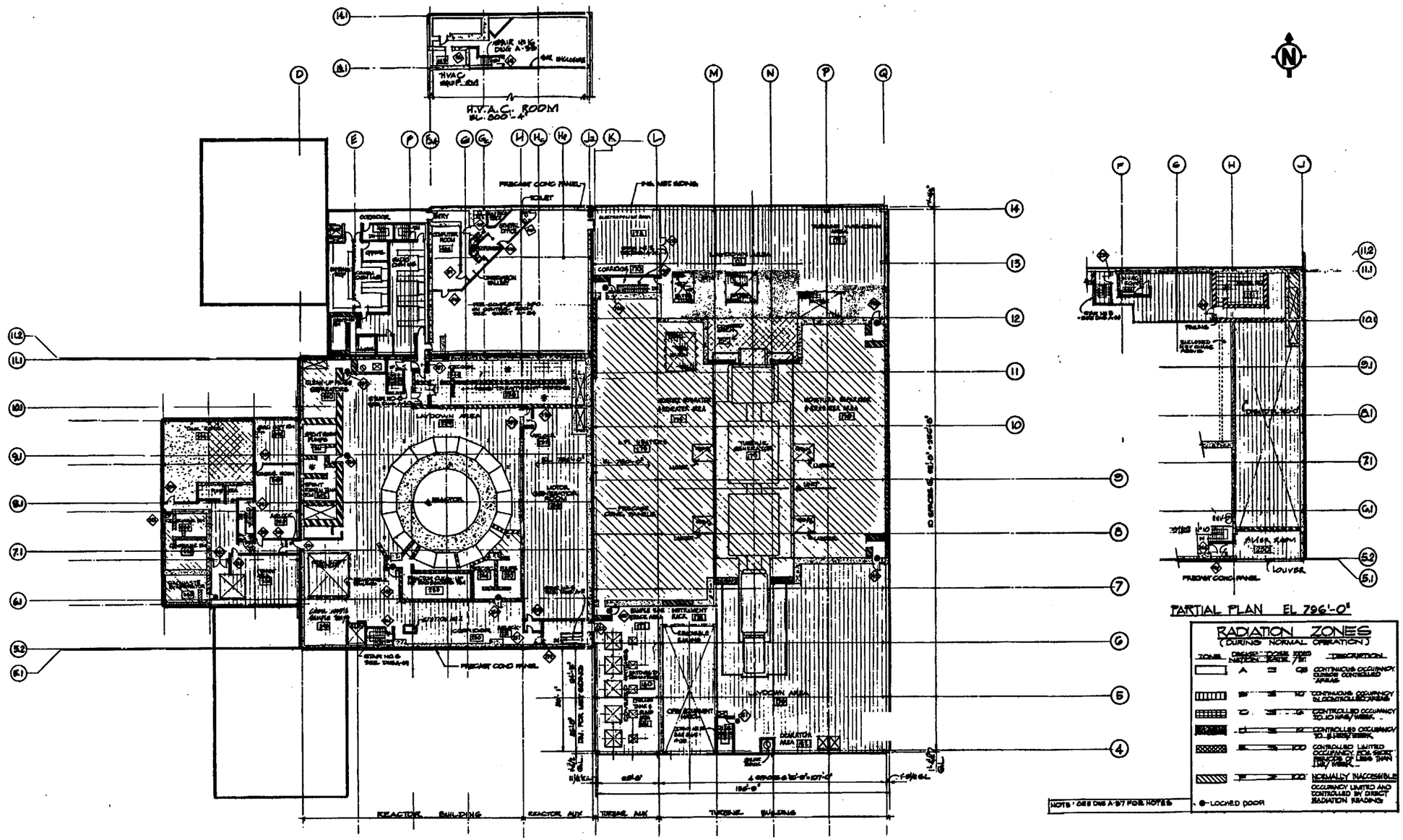

PLAN EL.S. 780'-0" & 786'-0"

DUANE ARNOLD ENERGY CENTER
IES UTILITIES
UPDATED FINAL SAFETY ANALYSIS REPORT

RADIATION ZONING FLOOR PLANS
ELEVATIONS 730'-0", 786'-0", & 796'-0"

FIGURE 12.3-3

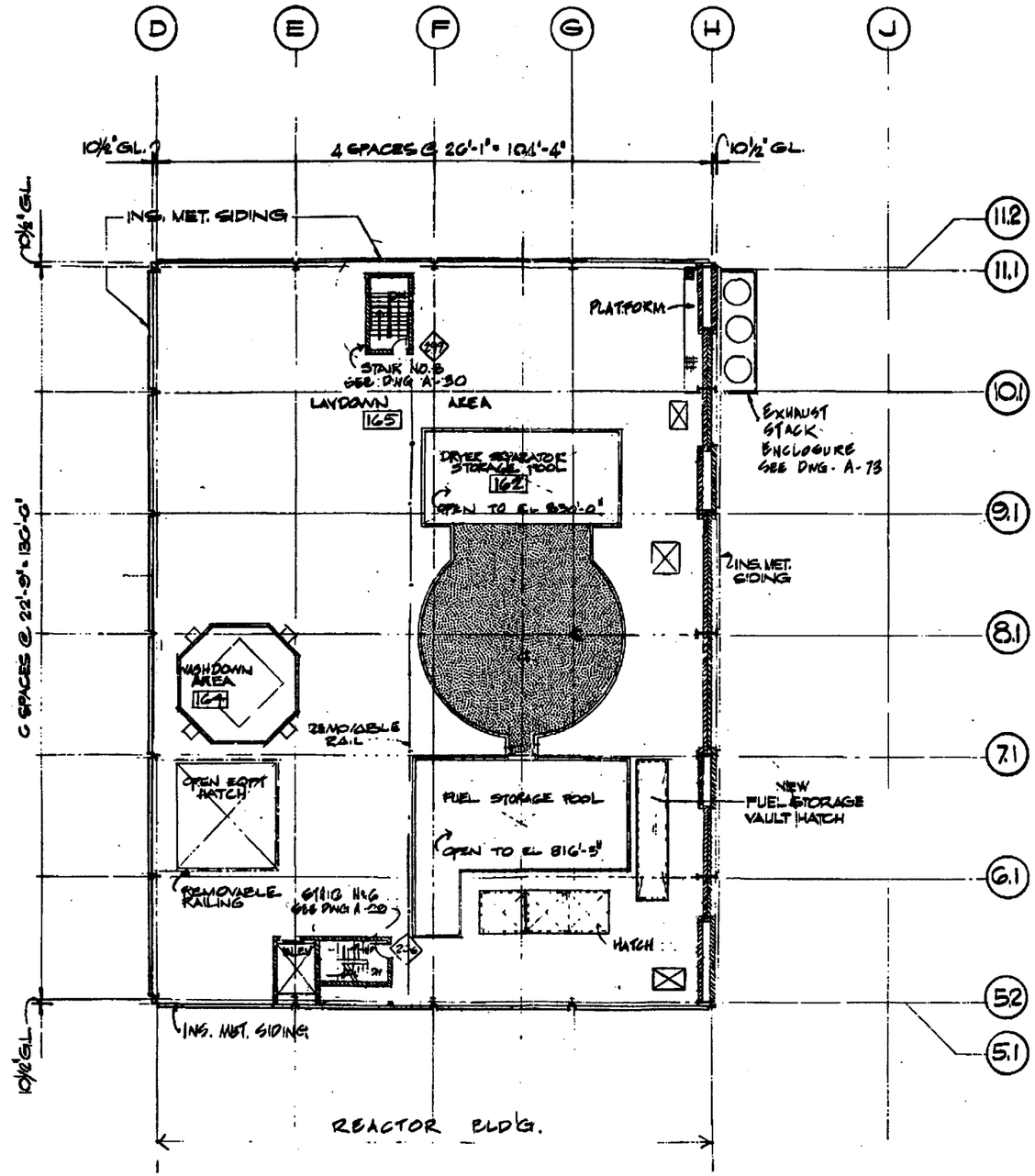

PLAN EL. 855'-0"

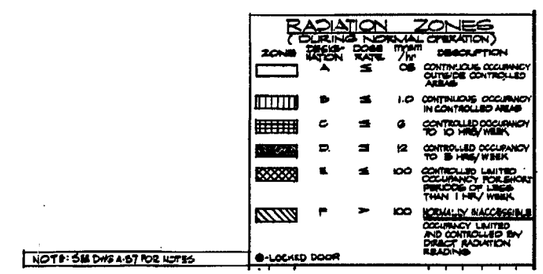

DUANE ARNOLD ENERGY CENTER
IES UTILITIES
UPDATED FINAL SAFETY ANALYSIS REPORT

RADIATION ZONES ELEVATION 855'

FIGURE 12.3-5

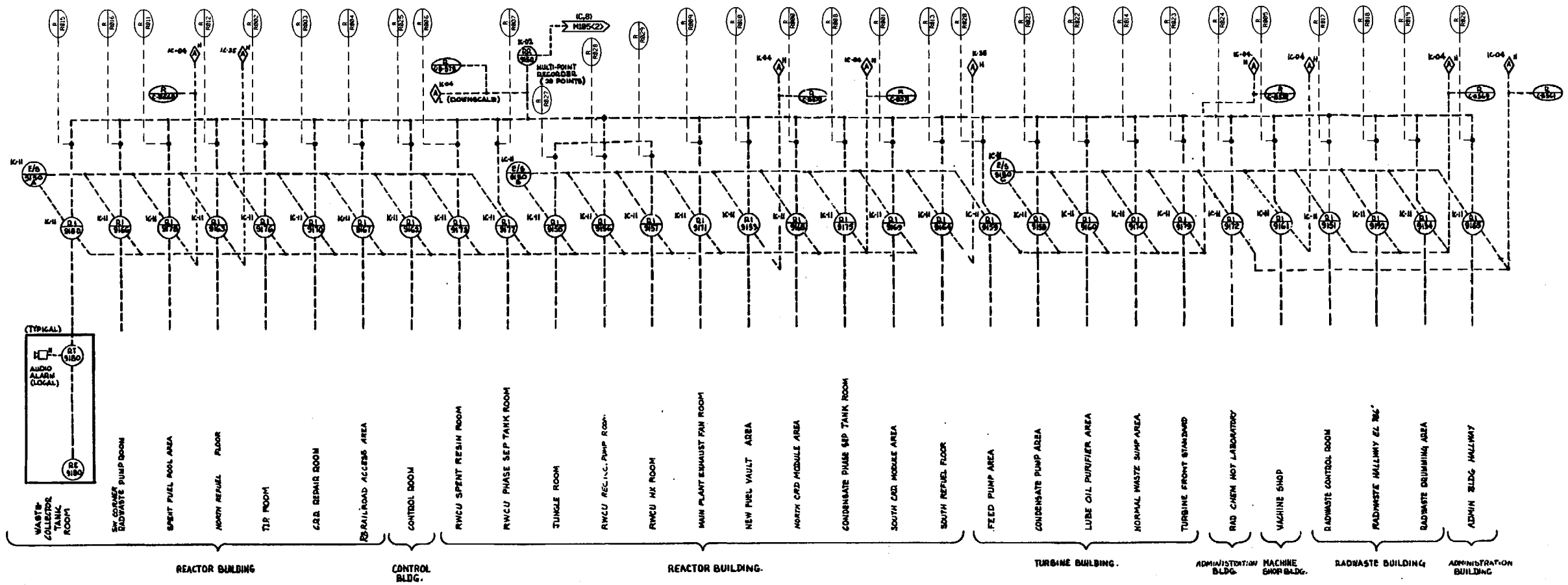

INSTRUMENT IDENTIFICATION NO.	SERVICE	COMPUTER POINT	LOCATION	AREA NO.	PRIM INST. LOCATION DWG NO M-	COORD'S
RE-9151	RADWASTE CONTROL ROOM	R017	RADWASTE BLDG	SW BLDG	405-8	F-5
RE-9152	RADWASTE HALLWAY ELEV. 786'	R018	RADWASTE BLDG	SAME	405-8	D-5
RE-9153	NEW FUEL VAULT AREA	R010	REACTOR BLDG.	5	405-5	D-6
RE-9154	RADWASTE DRUMMING AREA	R019	RADWASTE BLDG	RADBLDG	405-6	D-6
RE-9155	JUNGLE ROOM	R027	REACTOR BLDG.	4	409-4	F-7
RE-9156	RWCU RECIRC. PUMP ROOM	R028	REACTOR BLDG	5	405-3	D-6
RE-9157	RWCU HX ROOM	R029	REACTOR BLDG	5	405-3	D-7
RE-9158	CONDENSATE PUMP AREA	R021	TURBINE BLDG.	8	405-1	C-4
RE-9159	FEED PUMP AREA	R020	TURBINE BLDG.	1	405-1	F-3
RE-9160	LUBE OIL PURIFIER AREA	R022	TURBINE BLDG.	1	405-1	F-2
RE-9161	MACHINE SHOP	R035	MACHINE SHOP	-	405-11	F-5
RE-9162	CONTROL ROOM	R025	CONTROL BLDG	-	405-3	G-6
RE-9163	NORTH REFUEL FLOOR	R012	REACTOR BLDG	4	405-5	F-7
RE-9164	SOUTH REFUEL FLOOR	R013	REACTOR BLDG	3	405-3	C-7
RE-9165	ADMIN BUILDING HALLWAY	R026	ADMINIST. BLDG	-	405-2	H-8
RE-9166	SW CORNER RADWASTE PUMP ROOM	R016	REACTOR BLDG	3	405-1	C-7
RE-9167	A.B. RAILROAD ACCESS AREA	R034	REACTOR BLDG	3	405-2	C-7
RE-9168	NORTH C.R.D. MODULE AREA	R000	REACTOR BLDG	4	405-2	F-6
RE-9169	SOUTH C.R.D. MODULE AREA	R001	REACTOR BLDG	3	405-2	C-6
RE-9170	C.R.D. REPAIR ROOM	R003	REACTOR BLDG	4	405-2	E-5
RE-9171	MAIN PLANT EXHAUST FAN ROOM	R009	REACTOR BLDG	4	405-4	F-5
RE-9172	RAD CHEM HOT LAB	R024	ADMINIST. BLDG	-	405-3	G-6
RE-9173	RWCU SPENT RESIN ROOM	R006	REACTOR BLDG	4	405-3	E-7
RE-9174	NORMAL WASTE SUMP AREA	R014	TURBINE BLDG	3	405-1	B-2
RE-9175	CONDENSATE PHASE SEP TANK ROOM	R008	REACTOR BLDG	4	405-4	E-3
RE-9176	T.I.P. ROOM	R002	REACTOR BLDG	3	405-2	D-5
RE-9177	RWCU PHASE TANK ROOM	R007	REACTOR BLDG	4	405-3	F-7
RE-9178	SPENT FUEL POOL AREA	R011	REACTOR BLDG	3	405-5	D-6
RE-9179	TURBINE FRONT STANDARD	R023	TURBINE BLDG	1	405-3	F-3
RE-9180	WASTE COLLECTOR TANK ROOM	R015	REACTOR BLDG	5	405-1	C-6
RE-9184A	DRY WELL		REACTOR BLDG.	4	405-2	F-9.1
RE-9184B	DRY WELL		REACTOR BLDG.	5	405-2	G-7.1
RE-9185A	TORUS CHAMBER		REACTOR BLDG.	4	405-1	F 11.1
RE-9185B	TORUS CHAMBER		REACTOR BLDG.	5	405-1	J-7.1
RE-9186	TRUCK LOADING BAY ROOM 805		LOW LEVEL	LL	405-22	Aaal - 6.06
RE-9187	ACCESS AREA ROOM 800		LOW LEVEL	LL	405-22	Aa - 6.8
RE-9188	CRANE CONTROL ROOM 845		LOW LEVEL	LL	405-22	Aag - 5.9
RE-9141A	LLRPSF DEWATERING PIT		LO LVL RADWASTE	LL	829	A - 6.85
RE-9141B	LLRPSF DEWATERING PIT		LO LVL RADWASTE	LL	868	A - 5.85

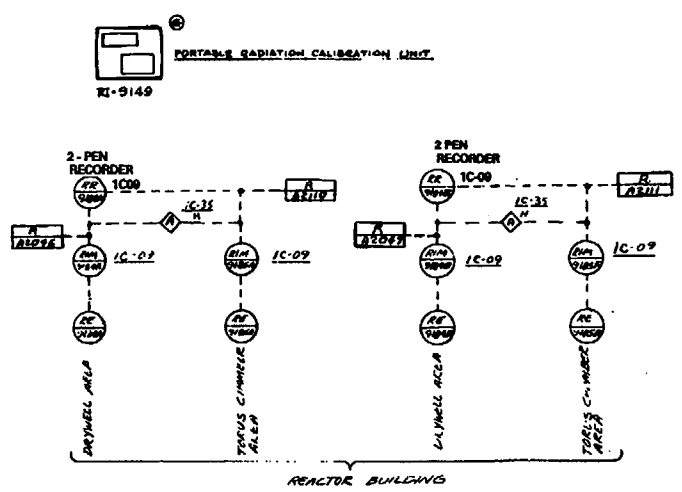

SENSITIVITY TABLE

RANGE	INSTRUMENT #RE-XXXX	GE APPD NO
0.01 - 10^2 MR/HR, 4 DECADES	9161, 9162, 9163, 9164, 9165	G 11
0.1 - 10^3 MR/HR, 4 DECADES	9151, 9152, 9153, 9154 9158, 9159, 9160 9166, 9167, 9168, 9169, 9170 9171, 9172, 9173, 9174, 9175	G 12
1.0 - 10^4 MR/HR 4 DECADES	9176, 9177, 9178, 9179, 9180	G 13
1.0 - 10^6 MR/HR 6 DECADES	9155, 9156, 9157	G 16
1 - 10^7 R/HR 6 DECADES	9184A, 9184B	D21
0.1-10^3 R/HR 4 DECADES	9141A, 9141B	—

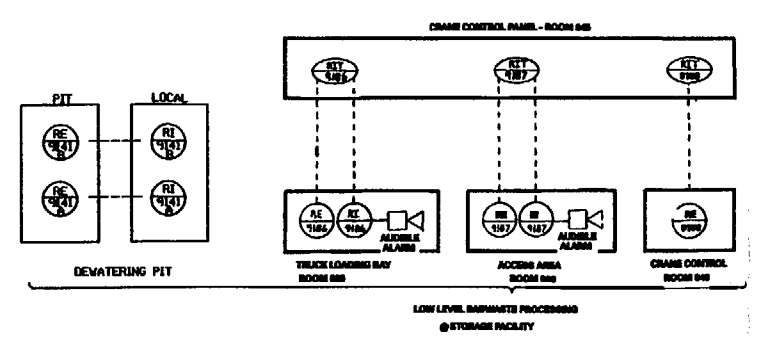

DUANE ARNOLD ENERGY CENTER
IES UTILITIES
UPDATED FINAL SAFETY ANALYSIS REPORT

AREA RADIATION MONITORING SYSTEM

FIGURE 12.3-7