BWR OWNERS' GROUP

W. Glenn Warren, Chairman
Tel: (205) 992-5940
Fax: (205) 992-0391
wgwarren@southernco.com

c/o Southern Nuclear • 40 Inverness Center Parkway • PO Box 1295 • Birmingham, AL 35242

BWROG-00068
June 7, 2000

Project No. 691

U.S. Nuclear Regulatory Commission
Document Control Desk
Washington DC 20555

Attn: Chief, Information Management Branch

Subject: "Alternate BWR Feedwater Nozzle Inspection Requirements," GE-NE-523-A71-0594-A, Revision 1, May 2000"

Reference: Letter from Stuart A. Richards to W. Glenn Warren, "Final Safety Evaluation of BWR Owners' Group Alternate Boiling Water Reactor (BWR) Feedwater Nozzle Inspection (TAC No. MA6787)."

Attached please find five (5) copies of the subject Licensing Topical Report (designation - A) as requested in the reference Safety Evaluation. Plants electing to implement these feedwater nozzle inspection techniques will do so via their internal processes. This concludes the BWROG activity on this Licensing Topical Report.

If you have any questions or require additional copies, please contact Kathy Sedney (GE), 408-925-5232.

Regards,

W. Glenn Warren, Chairman
BWR Owners' Group

cc: JM Kenny, BWROG Vice Chairman
JA Gray, NYPA
BWR Owners' Group ISI/IST Committee
KK Sedney, GE
TG Hurst, GE
A Marion, NEI
G Vine, EPRI

D044 1/5

GE Nuclear Energy

GE-NE-523-A71-0594-A
Revision 1
DRF 137-0010-7
Class II
May 2000

Alternate BWR Feedwater Nozzle Inspection Requirements

GE Nuclear Energy

GE-NE-523-A71-0594-A
Revision 1
DRF 137-0010-7
Class II
May 2000

Alternate BWR Feedwater Nozzle Inspection Requirements

UNITED STATES
NUCLEAR REGULATORY COMMISSION
WASHINGTON, D.C. 20555-0001

March 10, 2000

Mr. W. Glenn Warren, Chairman
BWR Owners Group
Southern Nuclear
40 Inverness Center Parkway
PO Box 1295
Birmingham, Al 35242

SUBJECT: FINAL SAFETY EVALUATION OF BWR OWNER's GROUP ALTERNATE BOILING WATER REACTOR (BWR) FEEDWATER NOZZLE INSPECTION (TAC NO. MA6787)

Dear Mr. Warren:

By letter dated September 24, 1999, the BWR Owners Group (BWROG) submitted for NRC staff review Topical Report GE-NE-523-A71-0594, Revision 1, "Alternate BWR Feedwater Nozzle Inspection Requirements," dated August 1999. This report proposed an alternative to the recommendations set forth in NUREG-0619, "BWR Feedwater Nozzle and Control Rod Return Drain Line Nozzle Cracking." As an alternative to the inspection program recommended in NUREG-0619, the topical report would: (1) accept the ultrasonic testing (UT) as the basis to eliminate supplemental liquid penetrant testing of the inside radius of the reactor pressure vessel (RPV) nozzles, (2) lengthen the time interval between routine UT of the inside radius of the RPV nozzles, and (3) reduce the inspection area of the inside radius of the RPV nozzles. The alternative implements existing ASME Code requirements for most licensees. Licensees relying on certain interference fit spargers to reduce thermal stresses will still perform more frequent UT inspections than required by Code. In its review of the topical report, the staff has focused on the quality and reliability of the ultrasonic examinations. The staff has determined that the improvements in examination techniques in recent years justify the proposed alternative, recognizing also that the Section XI, Appendix VIII performance demonstration rules will soon take effect. The staff has previously accepted UT as a basis for eliminating surface examinations.

On June 5, 1998, the staff issued a safety evaluation for GE-NE-523-A71-0594, Revision 0. The BWROG revised the original submittal to address recommendations in the staff's safety evaluation. The BWROG letter of September 24, 1999, responded to our recommendations by adopting the forthcoming schedule for implementation of the ASME Code, Section XI, in 10 CFR 50.55a. The staff has completed its review and determined that the proposed inspection program and schedule in GE-NE-523-A71-0594, Revision 1, is justified and provides an acceptable level of quality and safety. Therefore, GE-NE-523-A71-0594, Revision 1, is an acceptable alternative to the inspection guidelines in NUREG-0619.

In accordance with procedures established in NUREG-0390, it is requested that the BWROG issue accepted versions of this report, proprietary and non-proprietary, within three months of receipt of this letter. The accepted versions should incorporate this letter between the title page and the abstract. The accepted versions should include an -A (designated accepted) following the report identification symbol.

If you have any questions please call Robert M. Pulsifer at (301) 415-3016.

Sincerely,

Stuart A. Richards, Director
Project Directorate IV and Decommissioning
Division of Licensing Project Management
Office of Nuclear Reactor Regulation

Project No. 691

cc: See next page

cc:

Mr. James M. Kenny
BWR Owners' Group Vice Chairman
PP&L, Inc.
Mail Code GENA6-1
Allentown, PA 18101-1179

Mr. Thomas J. Rausch
RRG Chairman
Commonwealth Edison Company
Nuclear Fuel Services
1400 Opus Place, 4th Floor
Downers Grove, IL 60515-5701

Mr. Drew B. Fetters
PECO Energy
Nuclear Group Headquarters
MC 61A-3
965 Chesterbrook Blvd.
Wayne, PA 19087-5691

Mr. H. Lewis Sumner
Southern Nuclear Company
40 Inverness Parkway
PO Box 1295
Birmingham, GA 35201

Mr. Carl D. Terry
Vice President, Nuclear Engineering
Niagara Mohawk Power Corporation
Nine Mile Point - Station
OPS Bldg/2nd Floor
PO Box 63
Lycoming, NY 13093

Mr. George T. Jones
PP& L, Inc.
MC GENA6-1
Two North Ninth Street
Allentown, PA 18101

Mr. John Kelly
New York Power Authority
14th Floor Mail Stop 14K
Centroplex Building
123 Main Street
White Plains, NY 10601

Mr. Thomas G. Hurst
GE Nuclear Energy
M/C 182
175 Curtner Avenue
San Jose, CA 95125

Mr. Thomas A. Green
GE Nuclear Energy
M/C 182
175 Curtner Avenue
San Jose, CA 95125

BWR OWNERS' GROUP

W. Glenn Warren, Chairman
Tel: (205) 992-5940
Fax: (205) 992-0391
wgwarren@southernco.com

c/o Southern Nuclear • 40 Inverness Center Parkway • PO Box 1295 • Birmingham, AL 35242

BWROG-99073
September 24, 1999

Project No. 691

United States Nuclear Regulatory Commission
Washington, DC 20555-0001

Attention: RM Pulsifer

Subject: BWR Owners' Group Licensing Topical Report, "Alternate BWR Feedwater Nozzle Inspection Requirements," GE-NE-523-A71-0594, Revision 1, August 1999

Attached, for your review and approval, is Revision 1 to the BWROG Licensing Topical Report, (LTR) "Alternate BWR Feedwater Nozzle Inspection Requirements". This revision was made to add section 6.3 titled, "Implementation Schedule". This section was added in response to NRC comments made during a conference call on April 20, 1999.

For completeness, the LTR also contains BWROG letter (BWROG-99026, dated March 25, 1999) transmitting BWROG Responses to NRC Safety Evaluation of Proposed Alternatives to BWR Feedwater Nozzle Inspections, dated June 5, 1998.

This transmittal should close all issues related to the BWROG alternate requirements to NUREG - 0619 feedwater nozzle examinations. Following NRC approval of GE-NE-523-A71-0594, Revision 1, "Alternate BWR Feedwater Nozzle Inspection Requirements," the BWROG will issue an "Approved" version of the LTR, including the NRC SER.

While this transmittal has been endorsed by a substantial number of the members of the BWROG, it should not be interpreted as a commitment of any individual member to a specific course of action. Each member must formally endorse the BWROG position in order for that position to become the member's position.

If you have any questions, please contact the undersigned or Dennis Swann (SNC), 205-992-5788.

Regards,

W. G. Warren
BWR Owners' Group Chairman

cc: BWR Owners' Group Executive Oversight Committee
BWR Owners' Group Primary Representatives
BWR Owners' Group ISI/IST Committee
JM Kenny, BWROG Vice Chairman
DM Swann, SNC
TG Hurst, GE
KR Fletcher, GE
KK Sedney, GE

GE Nuclear Energy

GE-NE-523-A71-0594
Revision 1
DRF 137-0010-7
Class II
August 1999

Alternate BWR Feedwater Nozzle Inspection Requirements

FOREWARD

For completeness, this document contains:

- BWR Owners' Group letter (BWROG-99026, dated March 25, 1999) transmitting BWROG Responses to NRC Safety Evaluation of Proposed Alternative to BWR Feedwater Nozzle Inspections, dated June 5, 1998.

GE-NE-523-A71-0594-A

BWR OWNERS' GROUP

W. Glenn Warren, Chairman
Tel: (205) 992-5940
Fax: (205) 992-0391
wgwarren@southernco.com

c/o Southern Nuclear • 40 Inverness Center Parkway • PO Box 1295 • Birmingham, AL 35242

Project No. 691

BWROG-99026
March 25, 1999

United States Nuclear Regulatory Commission
Washington, DC 20555-0001

Attention: Michael J. Davis

Subject: BWR Owners' Group Responses to NRC Safety Evaluation of Proposed Alternative to BWR Feedwater Nozzle Inspections, dated June 5, 1998

Attached is the BWR Owners' Group response to the NRC document entitled, "Safety Evaluation of Proposed Alternative to BWR Feedwater Nozzle Inspections," dated June 5, 1998. This response provides clarifications to the conditions specified in Section 5.0 of the safety evaluation (SE). The NRC staff indicated that the SE did not reflect information contained in the April 1, 1998 BWROG response to the NRC Request for Additional Information (RAI) due to the timing of the submittal. The RAI response provides additional technical bases that were discussed in a public meeting on April 22, 1997, and supports the clarifications offered in the attachment to this letter.

The BWROG believes this transmittal will satisfactorily close all issues related to the BWROG alternate requirements to NUREG-0619 feedwater nozzle examinations.

While this transmittal has been endorsed by a substantial number of the members of the BWROG, it should not be interpreted as a commitment of any individual member to a specific course of action. Each member must formally endorse the BWROG position in order for that position to become the member's position.

If you have any questions, please contact the undersigned or Dennis Swann (SNC), 205-992-5788.

Regards,

Original Signed by

W. G. Warren
BWR Owners' Group Chairman

cc: BWR Owners' Group Executive Oversight Committee
BWR Owners' Group Primary Representatives
BWR Owners' Group ISI/IST Committee
JM Kenny, BWR Owners' Group Vice Chairman
DM Swann, SNC
DB Townsend, GE
KK Sedney, GE

GE-NE-523-A71-0594-A

BWROG Response to Conditions Stated in "Safety Evaluation of Proposed Alternative to BWR Feedwater Nozzle Inspections," dated June 5, 1998

This attachment contains responses and clarifications to the Nuclear Regulatory Commission (NRC) Safety Evaluation (SE) of the BWR Owners' Group (BWROG) Proposed Alternative to BWR Feedwater Nozzle Inspections. The SE was issued June 5, 1998. The BWROG believes that these clarifications should close all issues associated with feedwater nozzle inspections proposed as an alternative to those specified in NUREG-0619, as amended in 1981 by NRC Generic Letter (GL) 81-11.

As specified in the BWROG submittal dated October 30, 1995 (GE Report No. GE-NE-523-A71-0594) and in subsequent submittals and discussions with the NRC, it is a requirement of the BWROG alternate program that the ultrasonic (UT) techniques to be employed must be demonstrated to reliably detect and size the flaws of concern. The SE indicates that ASME Code, Section XI, Appendix VIII is a method acceptable to the staff for demonstrating the adequacy of the UT techniques to be used. The BWROG agrees that Appendix VIII is an acceptable means to demonstrate adequacy, and in fact, some vendors/utilities have used that guidance. However, it is not the only method of assuring UT adequacy. On three occasions, demonstrations have been conducted by different vendors on both clad and unclad nozzles with NRC witnesses present. In each case, the NRC accepted the use of the technique that was used. Additionally, the issues associated with the adequacy of UT methods and their demonstration were discussed at a public meeting with the NRC on April 22, 1997. The technical information exchanged at that meeting as well as response to RAI's were documented in a BWROG response to the NRC by letter dated April 1, 1998. That information provided UT qualification, evaluation and modeling criteria that are used throughout the nuclear industry. Based on this, the BWROG believes that the requirement to demonstrate the adequacy of the UT technique, as documented in GE-NE-523-A71-0594 and other subsequent transmittals, is sufficient. Further, given that the basic objective of Appendix VIII is to demonstrate that the inspection methods used can sufficiently detect the flaws of concern, the BWROG program satisfies the Appendix VIII objective.

Finally, it is worth noting that reference to ASME Code, Section XI, Appendix VIII has been made in the NRC SE and this response. In no case has a specific Edition or Addenda of the ASME Code been referenced. This is appropriate for at least two reasons. First, Appendix VIII does not appear in a version of the ASME Code, Section XI that has been endorsed by the NRC. This is one aspect of the proposed rulemaking now under consideration by the NRC. Second, the ASME Code, Section XI Subcommittee recently passed (August 1998) a major revision to Appendix VIII. This revision is intended to be responsive to comments generated as part of the rulemaking process. Thus, the reference to any version of Appendix VIII is inappropriate until the NRC and industry have determined, via the rulemaking process, which version is appropriate to use. However, as noted above, the BWROG requirement to qualify the UT technique to be used assures adequate examinations and meets the objectives and intent of Appendix VIII, regardless of the version considered.

Condition 1

The UT technique should have the ability to reliably detect axially oriented flaws from a depth equal to 0.25 inches for each of Zones 1 through 3 and axially and radially oriented flaws in the area of the nozzle-to-safe end welds located in Zone 5 (Figure 1). The nozzle-to-safe end butt weld in Zone 5 is required to be inspected according to paragraph IWB-2500-1 of ASME Code.

BWROG Response to Conditions Stated in "Safety Evaluation of Proposed Alternative to BWR Feedwater Nozzle Inspections," dated June 5, 1998

Response:

The BWROG agrees with the specified condition for Zones 1 through 3. This is consistent with the requirements contained in GE-NE-523-A71-0594. This position was affirmed in the April 1, 1998 response to the NRC Request for Additional Information (RAI), Question 2.

The BWROG program is limited to the feedwater nozzle inner radius and bore regions identified as Zones 1 through 3. This was clarified in a public meeting held on April 22, 1997, and in the April 1, 1998 RAI response, Question 2. The nozzle-to-safe-end weld, identified as Zone 5 in the early NUREG-0619 documentation and plant inspection programs, has been dropped from the scope of the BWROG alternate to NUREG-0619. As specified in the public meeting technical discussions and in the RAI response, these examinations will be conducted in accordance with the ASME Code, Section XI inservice inspection (ISI) programs in place at each licensee's facility. Any UT examination qualification performed for the code-required examination will be in accordance with the plant's existing procedures that are used in implementing the ISI program.

Condition 2

The PT may be eliminated from the FW nozzle examinations, provided that the UT techniques satisfy the requirements of the 1986 or later approved editions of ASME Code or the objectives of Appendix VIII. UT techniques that do not satisfy the 1986 or later approved editions of ASME Code or the objectives of Appendix VIII shall follow the PT frequency shown in Table 1.

As initially specified in GE-NE-523-A71-0594 and subsequent meetings and correspondence with the NRC, the BWROG alternative requires demonstration that the UT method to be used is capable of detecting and sizing flaws with depths of 0.25" or greater. While this simple definition may not explicitly fulfill the requirements of ASME Code, Section XI, Appendix VIII, it meets the desired objective of Appendix VIII by providing assurance that the examination method employed can size and detect the potential flaws of concern. This assurance eliminates the need for PT examinations, which were originally required in NUREG-0619 due to a lack of confidence in the UT techniques being used in the 1980 time-frame. Therefore, licensees that meet the criteria of the BWROG alternative can eliminate the PT examinations specified in NUREG-0619.

Specification of the edition of the ASME Code, Section XI to be met is not considered necessary. The demonstration required by GE-NE-523-A71-0594 will assure that an adequate UT technique is employed. Additionally, since the 1989 Edition of the ASME Code, Section XI is currently endorsed in 10CFR50.55a, all plants will soon be required to update their ISI programs to incorporate these requirements. At that time, each plant's ISI program (except where relief is granted) will be in compliance with the 1989 Edition of the ASME Code, Section XI, thereby eliminating any concerns the NRC has concerning UT methods employed. Until these updates occur, the demonstration required by the BWROG program fulfills the intent of these requirements.

Condition 3

The automated UT (gated peak threshold recording) multiplication factors shall be those shown for manual UT in Table 2, Method 1. Automated UT (gated peak threshold recording) techniques qualified according to the objectives of Appendix VIII may use multiplication factors in Table 2, Methods 2 or 3.

BWROG Response to Conditions Stated in "Safety Evaluation of Proposed Alternative to BWR Feedwater Nozzle Inspections," dated June 5, 1998

The latter part of this Condition allows the use of Methods 2 or 3 in Table 2 of the NRC SE for automated UT techniques using gated peak threshold recording when qualified according to the objectives of Appendix VIII. Since automated UT that uses gated peak threshold recording is Method 2 (as defined in Note 3 of Table 2 of the SE), it is assumed that the NRC intended to allow the use of Methods 3 or 4 of Table 2 (not Method 2 or 3) when Method 2 has been demonstrated.

As stated above in the response to Condition 2, the BWROG self-imposed requirement to demonstrate the ability to detect and size the flaws of concern meets the objective of ASME Code, Section XI, Appendix VIII requirements. Therefore, it is concluded that when automated UT examinations are conducted using gated peak threshold recording that has been demonstrated in accordance with the BWROG requirements, the examination frequency will be the same as that for Methods 3 or 4. This frequency is defined in Table 6-1 of GE-NE-523-A71-0594 and Table 2 of the NRC SE.

Condition 4

The automated UT (no threshold recording) multiplication factors in Table 2, Method 3 are adequate, provided that the UT techniques are qualified according to the objectives of Appendix VIII.

Response:

The BWROG agrees with this Condition. As stated above in the response to Condition 2, the BWROG self-imposed requirement to demonstrate the ability to detect and size the flaws of concern meets the objective of ASME Code, Section XI, Appendix VIII requirements. Therefore, it is concluded that the multiplication factors for Method 3 are acceptable when the conditions of GE-NE-523-A71-0594 are met.

Condition 5

The inspection of Zone 3 shall be at the same frequency as Zones 1 and 2, except that licensees using the triple sleeve with double piston ring design sparger may follow the proposed inspection frequency for Zone 3, but not less than one inspection every ASME Code interval.

The BWROG agrees with this Condition. No clarification is needed.

Condition 6

The fracture mechanics analysis shall be recalculated using the more recent fatigue curves in the ASME Code that address environmental effects.

BWROG Response to Conditions Stated in "Safety Evaluation of Proposed Alternative to BWR Feedwater Nozzle Inspections," dated June 5, 1998

Response:

The requirements specified in GE-NE-523-A71-0594 are based on the most recent fatigue crack growth curves contained in ASME Code, Section XI, Figure A-4300-2 for a water environment. These curves have not changed significantly since their implementation into the Code in the early 1980s, and are the same as those contained in the 1998 Edition of the ASME Code. Therefore, the BWROG requirements are based on the latest fatigue crack growth curves approved by the ASME and endorsed by the NRC. This was clarified in the April 1, 1998 response to the NRC RAI, Question 22.

It is worth noting that revised fatigue crack growth curves are currently under consideration within ASME Section XI working groups. Early work by the BWROG evaluated the potential impact of those curves on the fracture mechanics results included in GE-NE-523-A71-0594. It was determined that, using reasonable assumptions for rise time, the results using the proposed revised curves are very similar to the results shown in GE-NE-523-A71-0594. Based on this, the fracture mechanics results documented in GE-NE-523-A71-0594, as well as the UT intervals derived therein, would remain valid even if the revised curves currently under consideration by the ASME Code were used. Nevertheless, the BWROG believes that only those curves approved and published by the ASME Code are appropriate for use in plant-specific fracture mechanics analyses.

SE Section 4.2

The last sentence of the first paragraph on Page 5 of the NRC SE states: *In the absence of any length sizing demonstrations, fracture mechanics analyses would have to assume an infinite length for cracks.*

Response:

Since most plant-specific fracture mechanics analyses are done prior to any inspections, the flaw assumed in the analysis is postulated. In order for the evaluation to cover all possible flaw locations and orientations, the limiting cross section and an appropriate crack model are selected. This combination of assumptions produces bounding results, and was used to generate each of the plant-specific results shown in GE-NE-523-A71-0594.

As documented in GE Report NEDE-21821-A, "Boiling Water Reactor Feedwater Nozzle/Sparger Final Report," the limiting section is in the nozzle inner blend radius region. This was also confirmed in Section 5.4 of GE-NE-523-A71-0594. For this scenario, the length of

flaws is limited due to the nozzle corner curvature. This length limitation had an influencing factor in developing the nozzle fracture mechanics model.

If flaws are found during inspection, the actual location and measured depth and length should be included in any flaw-specific evaluation. The length of flaws located in the limiting section in the inner blend radius region is limited due to the nozzle corner curvature. For flaws that may be detected in the nozzle bore region, the evaluation should consider the actual flaw aspect ratio. For nozzle bore flaw evaluations where length sizing by UT has not been demonstrated or employed, an infinite flaw length should be used.

IMPORTANT NOTICE REGARDING CONTENTS OF THIS REPORT

Please Read Carefully

This report was prepared by General Electric Company solely for the use of the BWR Owners' Group (BWROG). The information contained in this report is believed by General Electric to be an accurate and true representation of the facts known, obtained or provided to General Electric at the time this report was prepared.

The only undertakings of the General Electric Company respecting information in this document are contained in the contract governing this work, and nothing contained in this document shall be construed as changing said contract. The use of this information except as defined by said contract, or for any purpose other than that for which it is intended, is not authorized; and with respect to any such unauthorized use, neither the General Electric Company nor any of the contributors to this document makes any representation or warranty (express or implied) as to the completeness, accuracy or usefulness of the information contained in this document or that such use of such information may not infringe privately owned rights; nor do they assume any responsibility for liability or damage of any kind which may result from such use of such information.

TABLE OF CONTENTS

Page No.

1.0 INTRODUCTION 1-1

2.0 BACKGROUND 2-1

3.0 PLANT-SPECIFIC CONSIDERATIONS 3-1
- 3.1 Thermal Sleeve Design 3-1
- 3.2 Nozzle Cladding 3-8
- 3.3 Sparger Design 3-8
- 3.4 Feedwater Controller 3-9
- 3.5 RWCU System Alignment 3-10

4.0 ULTRASONIC TESTING REQUIREMENTS 4-1
- 4.1 Introduction 4-1
- 4.2 UT Examination Zones and Techniques 4-1
- 4.3 UT Technique Qualification 4-4
- 4.4 Mockup Criteria 4-4
- 4.5 Modeling Used for Technique Qualification 4-5
- 4.6 Personnel Qualification 4-5
- 4.7 Documentation of Inspection Results 4-5

5.0 TECHNICAL EVALUATION 5-1
- 5.1 Introduction 5-1
- 5.2 Survey of Fracture Mechanics Data 5-1
- 5.3 Summary of Evaluation Results 5-6
- 5.4 Assessment of Other Crack Locations 5-6
- 5.5 Leakage Monitoring 5-10
- 5.6 Summary of Technical Assessment 5-10

6.0 CONCLUSIONS AND RECOMMENDATIONS 6-1
- 6.1 Conclusions 6-1
- 6.2 Recommendations 6-2
- 6.3 Implementation Schedule 6-3

7.0 REFERENCES 7-1

LIST OF FIGURES

Page No.

Figure 3-1. Typical Single Thermal Sleeve with Flow Baffle Plate Design 3-3
Figure 3-2. Typical Single Sleeve, Inconel Weld Design 3-4
Figure 3-3. Typical Tuning Fork/Interference Fit Double Thermal Sleeve Design 3-5
Figure 3-4. Typical Single Thermal Sleeve Tuning Fork Design 3-6
Figure 3-5. Typical Triple Thermal Sleeve Design 3-7

Figure 4-1. Feedwater Nozzle Inspection Zones (Clad Nozzle) 4-2
Figure 4-2. Nozzle Inspection Zones (Clad-Removed Nozzle) 4-3

Figure 5-1. Fracture Mechanics Results for Several BWRs 5-4
Figure 5-2. Comparison of Crack Growth Results for Different Nozzle Locations 5-9

LIST OF TABLES

Page No.

Table 5-1. Fracture Mechanics Analysis Summary 5-5

Table 6-1. Feedwater Nozzle/Sparger Inspection Recommendations 6-4

1.0 INTRODUCTION

In response to fatigue cracking experienced by many boiling water reactors (BWRs) in feedwater and control rod drive (CRD) return line nozzles during the 1970s, the Nuclear Regulatory Commission (NRC) issued NUREG-0619 [1] in 1980. That document described the cracking phenomena, identified fixes and provided inspection and plant hardware modification recommendations based on extensive testing and analysis performed by General Electric (GE) as well as inspection technology available at that time. The NRC amended NUREG-0619 with Generic Letter (GL) 81-11 [2] in 1981, allowing for plant-specific analysis in lieu of hardware modifications. Together, these documents specified NRC-endorsed actions to mitigate the initiation and propagation of feedwater nozzle cracking and provided inspection guidelines to identify the onset of any further cracking.

Many of the guidelines established by NUREG-0619 were based on the latest technology available at the time NUREG-0619 was published. Uncertainties associated with analysis and ultrasonic (UT) inspection methodology were accommodated by additional examination requirements to assure that the cracking phenomena had been eliminated. In particular, visual and liquid penetrant (PT) surface examinations were specified in addition to periodic UT examinations to address these uncertainties. The application of these required examinations is very costly to utilities in terms of manpower, personnel exposure, potential hardware repair or replacement and reactor unavailability. This is especially true of the PT examinations where vessel drain down and sparger removal is necessary.

Since 1980, significant field experience without the presence of additional fatigue cracking in feedwater and CRD return line nozzles has been accumulated. In addition, significant advances in UT inspection technology have been realized. Based on this, alternate criteria to those originally set forth in NUREG-0619 which reflect these advances are appropriate. New inspection recommendations are established in this report on the basis of fracture mechanics analyses, inspection data obtained from several BWRs, and advanced UT inspection techniques currently available. In addition, inspection guidelines are provided and the frequency for reviewing the adequacy of these inspections is proposed. The recommendations presented in this report are intended to be a substitute for those set forth in NUREG-0619, provided the guidelines established herein are followed.

2.0 BACKGROUND

In August 1974, during a scheduled refueling outage at a domestic BWR, visual inspection revealed many cracks on the feedwater sparger and supports. PT inspection was conducted on the feedwater nozzles due to their proximity to the cracked spargers. Twenty three linear indications, up to 0.3 inch deep were found on the nozzle inner surface. During the following years, several other BWR plants found similar indications. Sparger arm and flow nozzle cracking, sparger intergranular stress corrosion cracking (IGSCC), and nozzle blend radius and bore fatigue cracking was found to varying degrees at several BWR plants.

When the cracking phenomenon was identified as a generic problem to the BWR, a meeting was held with the NRC and Utilities in November 1975 to discuss the issue. The following points were made during that meeting: (1) leakage between the nozzle and thermal sleeve was identified as a cause of thermal cycling, (2) thermal stresses at the nozzle inner wall at a frequency of 1 Hz could cause crack initiation, (3) after a crack had initiated, it could be propagated by normal plant startup, shutdown, and scram transients, and (4) establishing a leak-tight seal between the feedwater nozzle safe ends and the thermal sleeves would improve the ability to eliminate crack formation. The NRC recommended a surveillance program generated by GE for the feedwater nozzles to gain further insight into the issue.

GE completed a fracture mechanics analysis to identify crack growth rates for several thermal sleeve designs using generic plant thermal cycle data. GE then issued Services Information Letter (SIL) No. 207 [3] in 1976 for use in developing surveillance frequencies. Following several utility and NRC review cycles, the final report was completed. SIL 207 incorporated revisions to original inspection recommendations as a result of nozzle bore cracks being found at one BWR which were much deeper than predicted by the analytical model.

Several GE, Utility, and NRC meetings were held from 1976 to 1979 to discuss results of the GE sparger test program initiated as a result of the cracking, as well as the status of sparger designs and surveillance recommendations. The result of these meetings was the generation of GE Report NEDO-21821-A [4] released in February 1980. This report superseded several earlier versions, and incorporated comments

from the NRC Safety Evaluation. The NRC Safety Evaluation and comments pertaining to NEDO-21821-A were included in NUREG-0619 dated November 1980.

NUREG-0619, which superseded NUREG-0312 [5], summarized NRC actions to resolve Generic Technical Activity A-10, "BWR Nozzle Cracking." The report summarized the technical issues associated with BWR nozzle cracking and described the associated NRC and GE evaluations. NUREG-0619 addressed these issues for both feedwater and CRD return line nozzle cracking.

The issue of CRD return line nozzle cracking is currently limited to only two domestic BWR plants; more recent BWRs eliminated these nozzles from the original reactor design, and all other operating plants removed these nozzles from use by capping the nozzles and rerouting the return lines elsewhere. Therefore, these nozzles will not be addressed in this report.

With regard to feedwater nozzle cracking, NUREG-0619 provided the following NRC staff conclusions:

(1) The BWR feedwater nozzle cracking phenomenon was sufficiently understood to permit quantitative evaluation of the proposed solutions.
(2) The proposed solutions, including clad removal, installation of a modified sparger design, changes to operating procedures, and feedwater system modifications, permitted an extension of the required inspection intervals beyond those specified in the NRC interim document NUREG-0312.
(3) The use of interference fit spargers and the attendant frequent PT inspections would no longer be permissible after June 30, 1983.
(4) A new addition to the in-service inspection program was leak determination that would verify the integrity of the thermal-sleeve-to-vessel seal or weld. Leak determination procedures had not yet been standardized by licensees.
(5) UT procedures required further development before ultrasonic testing could become the primary means of nozzle inspection.

As a result of GE and utility comments regarding NUREG-0619, the NRC revised several of their requirements in GL 81-11. These changes included deletion of leak testing requirements and relaxation of the requirement to replace existing feedwater

controllers with controllers meeting the requirements of NEDO-21821-A. GL 81-11 accepted continued use of the original feedwater controllers not meeting these requirements based upon plant-specific fracture mechanics analysis or application of the generic analysis provided in NEDO-21821-A. To be acceptable to the NRC, such analysis had to analytically demonstrate that stresses from conservative controller temperature and flow profiles, when added to those resulting from the other crack growth phenomena such as startup and shutdown cycles, did not result in the growth of an assumed crack to greater than the allowable value of one inch during the forty year life of the plant. Such an evaluation can be on a generic or plant specific basis provided that appropriate justification is provided.

It should be emphasized no new cracking has been identified in the last fifteen years. This is attributable to operational changes, enhanced by sparger design changes. Nevertheless, the enhanced inspection requirements of NUREG-0619 remain. This report describes the technical basis for alternative BWR feedwater nozzle inspection requirements considering current experience and UT capability.

Although the inspection frequencies recommended in NUREG-0619 are suitable for ensuring that feedwater nozzle cracks are identified prior to propagating to unsafe depths, the improvements in ultrasonic testing (UT) capability and the acceptable crack growth results seen in the majority of recent fracture mechanics analyses provide justification to revise the inspection frequency and allow an alternative method. In fact, it was the intent of the NRC to eliminate penetrant testing (PT) requirements when improved UT techniques were available. Two BWR plants have demonstrated and implemented the new UT capabilities (from different vendors) and it is therefore appropriate to revise the inspection requirements in light of the new UT capability. On the basis of the data and evaluation which follow, new inspection recommendations are provided which will ensure adequate margins to plant safety while providing a significant reduction in maintenance costs and personnel exposure.

In summary,

- The NRC intended that the feedwater nozzle PT examination be used until UT capabilities were shown to be adequate. This has now occurred, as manifested in the two demonstrations, and the PT examination should therefore be eliminated.

- Because leakage has been reduced and operational changes have been implemented, no new cracking has been identified in over 15 years, for both clad and unclad plants.

3.0 PLANT-SPECIFIC CONSIDERATIONS

The degree to which BWR feedwater nozzle fatigue cracking problems occurred at any particular plant was a function of plant operating procedures, as well as the ability of the installed hardware configuration to mitigate the frequency and magnitude of the thermal cycling phenomena. Several factors were shown to affect the rate of crack initiation and propagation, including feedwater sparger design, thermal sleeve design, the presence of stainless steel cladding on the inner surface of the nozzle, low flow feedwater control, and reactor water cleanup system alignment. As an input to this report, the BWR Owners' Group (BWROG) surveyed all of the participating domestic BWRs to identify which modifications recommended by NUREG-0619 and NEDO-21821-A have been implemented. General summaries of the survey responses are included in the description of the modifications which follow.

3.1 Thermal Sleeve Design

The most significant method identified for reducing fatigue crack initiation was to minimize the leakage of feedwater past the thermal sleeve seals into the nozzle bore annulus. Original loose fitting thermal sleeves resulted in the greatest amount of leakage and were eliminated from all BWR feedwater nozzles after the cracking phenomena was identified. Several replacement designs were subsequently proposed and implemented for use.

NUREG-0619 allowed single sleeve, interference fit thermal sleeve/sparger designs on an interim basis only due to expected increases in leakage due to interference fit relaxation. Currently, only a few BWRs still have single sleeve, interference fit thermal sleeve/sparger designs. While this design was considered interim under NUREG-0619, industry experience indicates that the interference fit sparger coupled with feedwater regulator control improvements has apparently been successful in mitigating cracking. While feedwater cracks were initially discovered after only four to five years of operation, no new fatigue cracks have been identified after 15 years of subsequent service.

NUREG-0619 also limited the use of welded-in spargers since they prevent the performance of required feedwater nozzle bore PT inspections. Survey results indicated about half a dozen plants have incorporated this design.

A single sleeve, piston ring design that includes a baffle plate to seal the nozzle annulus from the reactor vessel coolant has been implemented by two BWRs. This design has been shown to promote adequate nozzle shielding while still allowing for removal, if necessary.

The majority of BWR plants have implemented the triple sleeve, double piston ring design. This design incorporated two thermal seals to minimize leakage flow, along with three concentric sleeves to provide maximum thermal shielding for the nozzle bore and inner blend radius. This design was identified as the GE final design, and it formed much of the basis for the safety review performed by the NRC and incorporated into NUREG-0619.

These designs have all shown significant improvements in leak tightness over the original loose fit designs as ***there have been no reported incidences of fatigue cracking since these designs have been incorporated.***

Most of the replacement designs described above are shown in Figures 3-1 through 3-5. The figures represent typical configurations and are not intended to describe any specific plant design. The majority of these designs were originally intended to be removable for inspection purposes; however, no successful attempts have been made to-date to remove a sparger assembly utilizing these designs. Because of the tight interference fits associated with many of these designs, it is doubtful that removal will be possible without at least some damage to the components involved. Therefore, repair or replacement costs and personnel radiation exposure associated with removing these components for inspection are expected to be significant, and removal for the purposes of performing a PT examination is not warranted.

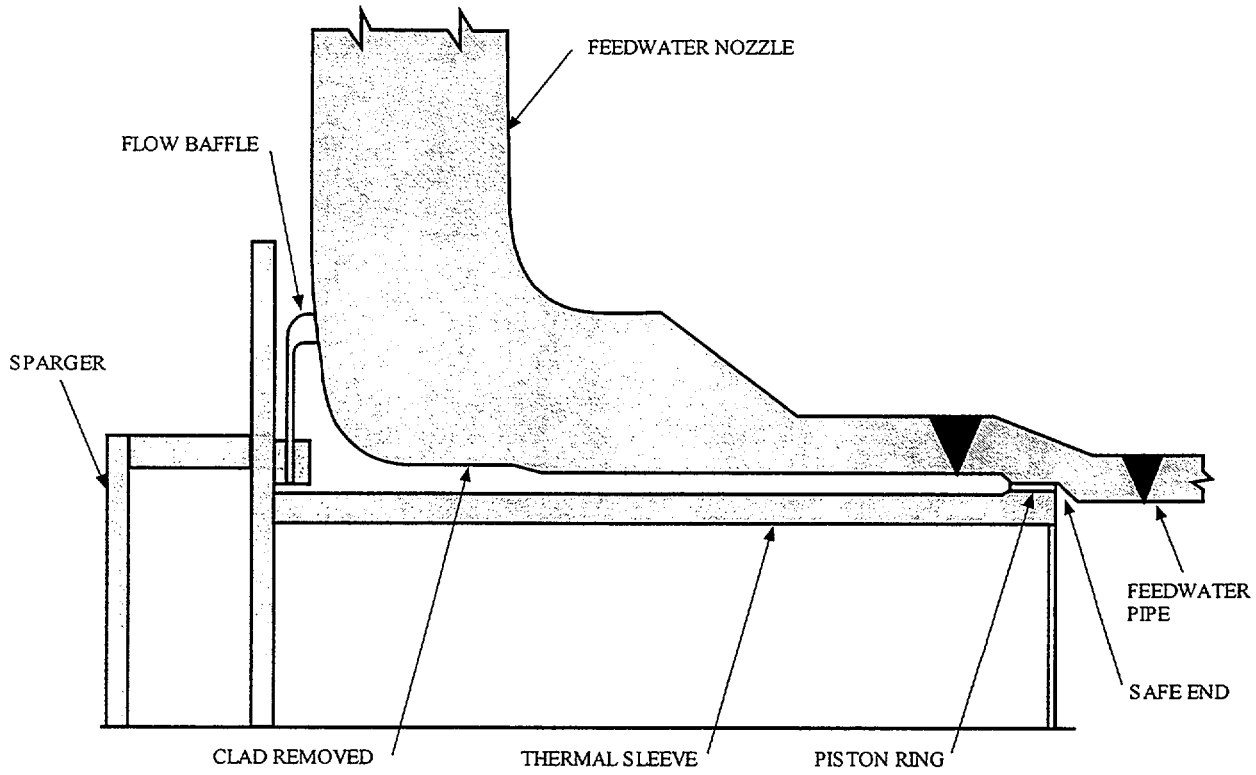

Figure 3-1. Typical Single Thermal Sleeve with Flow Baffle Plate Design

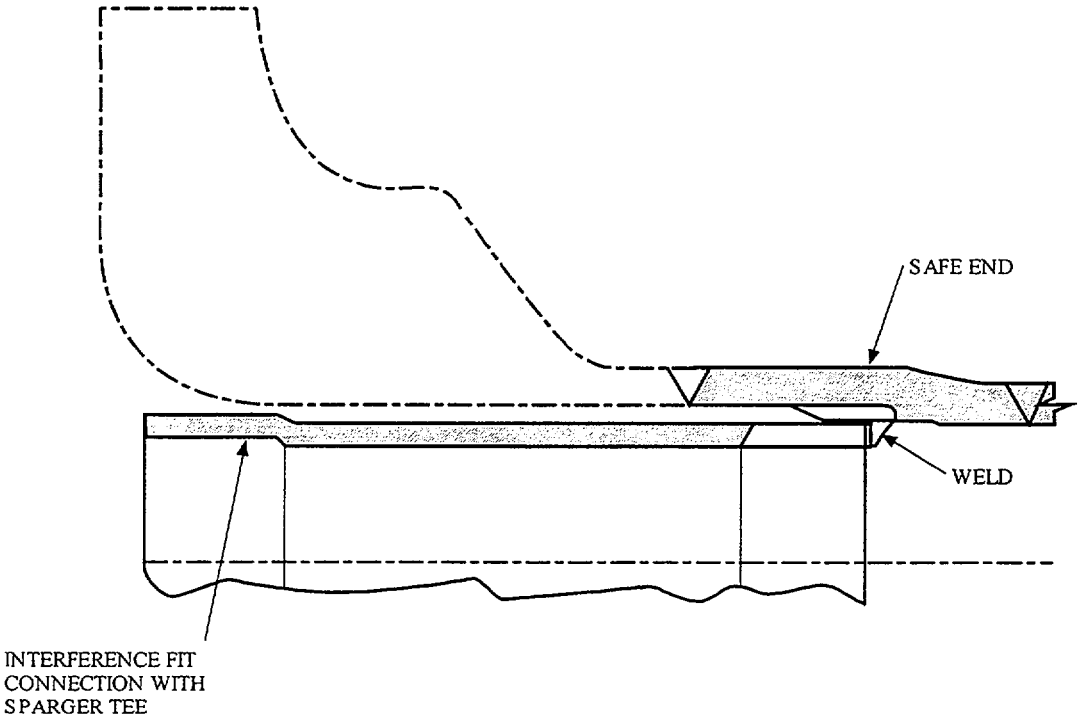

Figure 3-2. Typical Single Sleeve, Inconel Weld Design

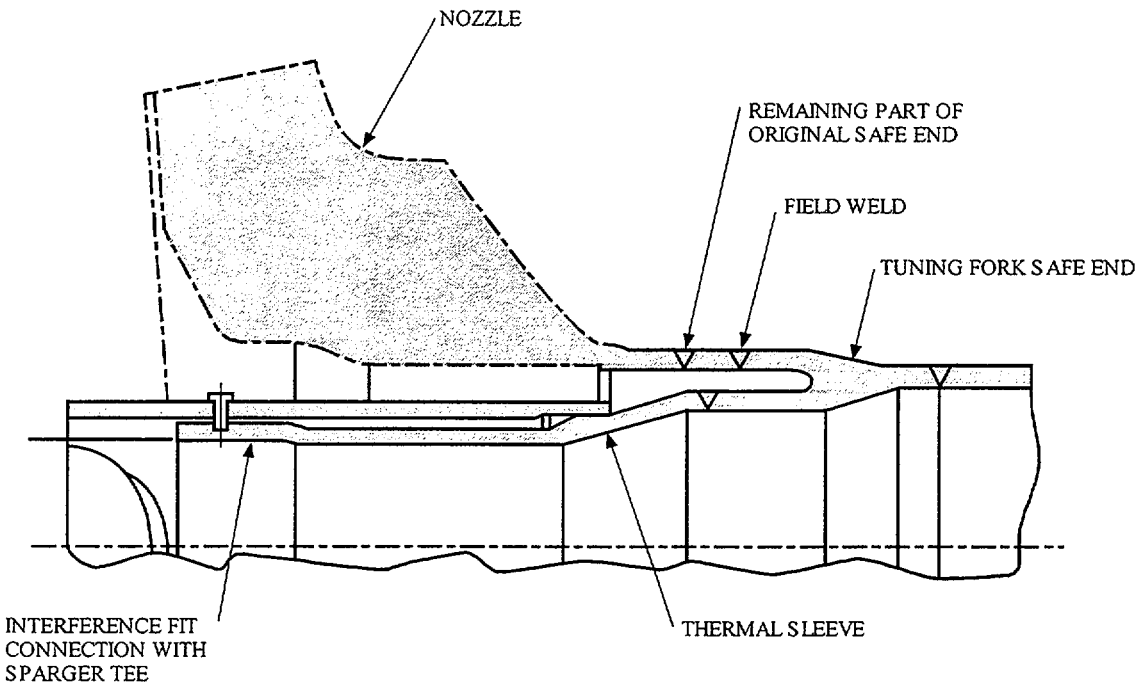

Figure 3-3. Typical Tuning Fork/Interference Fit Double Thermal Sleeve Design

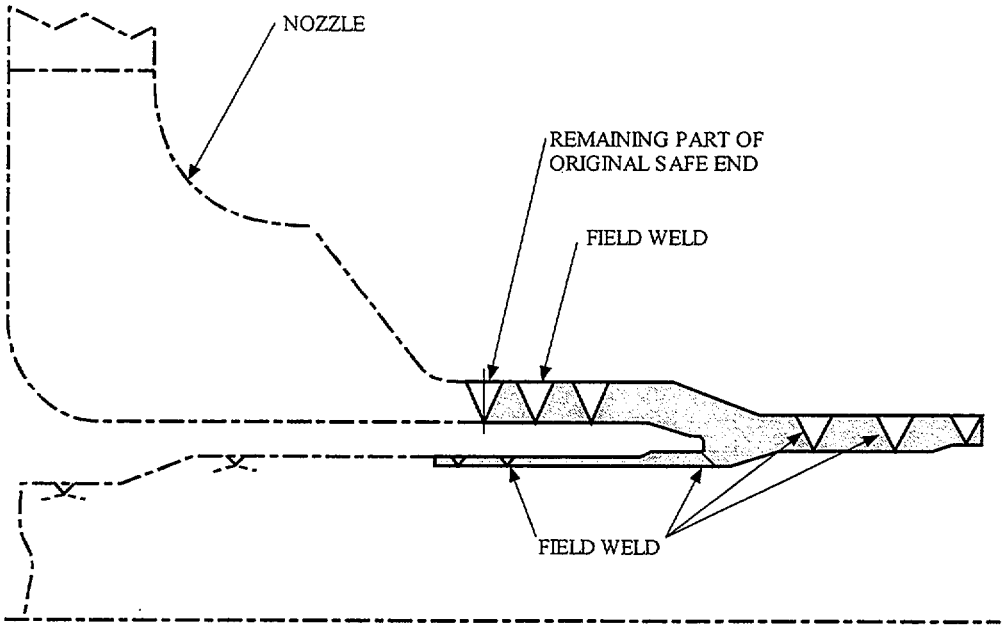

Figure 3-4. Typical Single Thermal Sleeve Tuning Fork Design

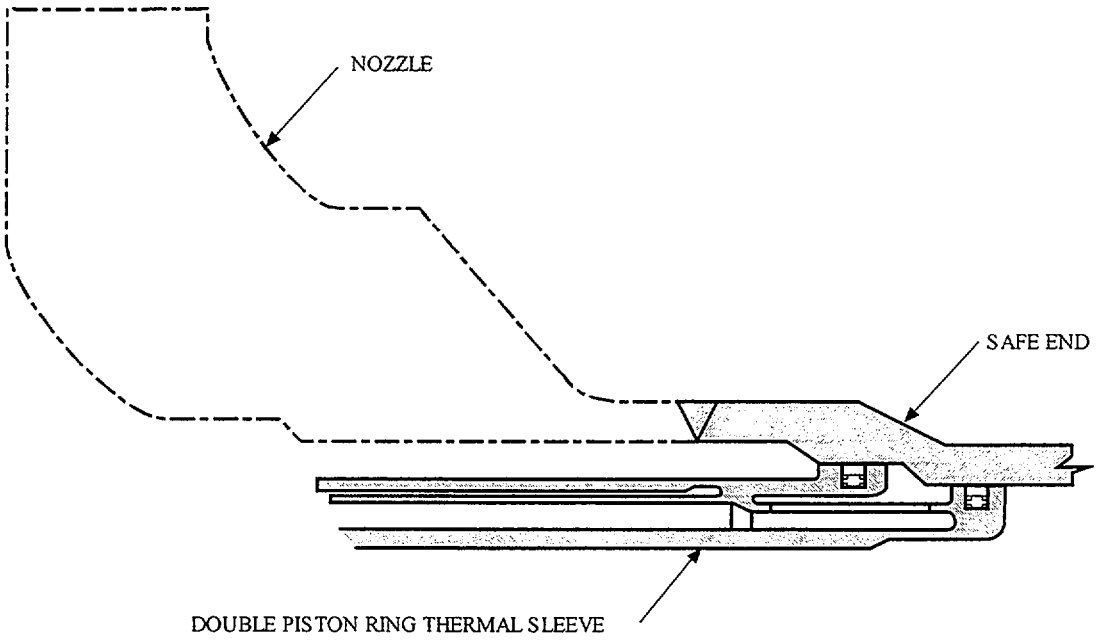

Figure 3-5. Typical Triple Thermal Sleeve Design

3.2 Nozzle Cladding

Stainless steel cladding was originally installed on the inner diameter of the feedwater nozzles at many BWRs to improve corrosion resistance of the carbon steel pressure vessel. The benefit of this reduction in corrosion rate was offset by the deleterious effect of the cladding on crack initiation and UT inspectability. The presence of cladding on the nozzle results in higher thermal stresses for two reasons: (1) different thermal expansion coefficients between stainless steel cladding and the low alloy steel base metal which introduce thermal stresses, (ii) higher thermal response (i.e., diffusivity) in the cladding compared to the low alloy steel base metal which leads to temperature gradient effects. These increased stresses contributed to increased nozzle crack initiation rates. The presence of the cladding also makes ultrasonic testing more difficult due to the interference in sound wave propagation which occurs at the cladding-base metal interface. This interference has been one of the primary causes in the past for non-repeatable ultrasonic test results for clad nozzles. Elimination of the cladding was recommended by GE and by NUREG-0619. Of the utilities responding to the BWROG survey, only a few have not removed feedwater nozzle cladding.

As previously noted, no new cracking has been identified in the last fifteen years, due to operational changes and enhanced by design changes. While the presence of cladding may not be optimal from the standpoint of crack initiation, experience to date does not mandate its removal. Furthermore, any impact on inspection adequacy will be accounted for in the UT technique qualification process.

3.3 Sparger Design

In addition to cracking at the feedwater nozzle bore and blend radii, significant cracking was observed at the sparger nozzles and "T' box. In order to overcome this problem, a new design was implemented at most plants which incorporated a forged "T' design that included top-mounted flow distribution elbows instead of the original side-drilled flow holes. This modified design allows the sparger to remain full of water during hot standby conditions when feedwater flow is not continuous. This minimizes the effects of thermal shock to the sparger during feedwater cycling, thereby reducing the propensity for crack initiation and propagation. Of the survey participants, only a few BWR plants still have side-drilled flow holes.

While GE's final recommendation was to use spargers with forged tees and top-mounted nozzles, GE had installed another repair in earlier plants. This repair included a sparger with forged tee, side-mounted holes with modified flow characteristics, and more stringent material requirements. Influenced by GE's final recommendations, this earlier replacement sparger design was considered to be interim in NUREG-0619, but industry experience has demonstrated satisfactory performance of this alternative.

3.4 Feedwater Controller

The original feedwater controllers installed at most BWRs provided on/off flow regulation, rather than continuous flow to maintain reactor water level at low power. This on/off flow regulation during hot standby conditions resulted in feedwater line thermal cycling. Inoperability of feedwater heaters during hot standby increased the severity of these cycles since feedwater preheating was minimal and a large temperature difference existed between the reactor vessel and incoming feedwater. To address these effects, NUREG-0619 and GL 81-11 required feedwater controller cycles to be evaluated in a plant-specific fracture mechanics analysis if the controller did not meet the six characteristics set forth in NEDO-21821-A. The analysis had to demonstrate that feedwater nozzle cracks would not grow to more than one inch during the forty year plant life.

Several plants have replaced their feedwater controllers or shown their original design to meet the characteristics of NEDO-21821-A. Of those survey respondents with the original controller who have performed a fracture mechanics analysis, all but a few have predicted acceptable crack growth over the forty year life, even with the additional thermal cycling associated with actual plant operation and plant-specific feedwater controller characteristics.

3.5 RWCU System Alignment

In addition to the feedwater controller modification discussed above, NUREG-0619 required reactor water cleanup (RWCU) system modification to reroute the RWCU return line to both feedwater lines. The intent of this requirement was to reduce thermal cycling at the feedwater nozzle location by maximizing the nozzle inlet water temperature (thereby lowering the available temperature difference between the

feedwater and reactor water). The nozzle inlet temperature was maximized as a result of the hotter RWCU flow mixing with the cooler feedwater flow.

Currently, several plants have incorporated the GE/NRC recommendation to reroute the RWCU return line. Other plants have analyzed the effect of the RWCU reroute on thermal cycling and found it to be insignificant and therefore not justifiable from a cost standpoint. In some instances, test data were used to determine that the effects of RWCU injection on fatigue usage factor was small. More recent plant designs have all incorporated distribution of RWCU flow to both feedwater lines. The impact of the RWCU reroute is apparently insignificant and does not impact the inspections that should be performed.

4.0 ULTRASONIC TESTING REQUIREMENTS

4.1 Introduction

During the mid-to-late 1970s, UT techniques in place for the examination of feedwater nozzles were not reliable for finding flaws within each region of the blend radius, bore, or safe end with the accuracy and repeatability required to rely on the techniques as the primary means of inspection. As a result, the NRC required PT inspections of the nozzle blend radius, bore, and safe end in NUREG-0619. The augmented PT examination required the removal of at least one feedwater sparger which is costly in plant down-time, personnel radiation exposure, and hardware repair/replacement.

With the more recent development of advanced UT techniques that have been demonstrated capable of detecting small nozzle flaws with acceptable reliability and consistency, a basis exists for modification of the NUREG-0619 inspection criteria.

The objective of the inspection program described here is to define the examination intervals based on the type of UT to be performed, areas to be examined, technique to be used, personnel qualifications, and thermal sleeve/sparger design configuration. Meeting the requirements specified in this section forms a basis for eliminating the NUREG-0619 PT inspection and using UT as the primary means of inspection. Coupled with fracture mechanics analysis (as described in the next section), these requirements will also establish the required frequency of UT inspection to provide continual assurance of nozzle integrity.

4.2 UT Examination Zones and Techniques

The zones to be examined by UT techniques shall be from and including the nozzle-inner radius up to and including the end of Zone 3. The examination zones are divided into 3 regions for identification purposes as shown in Figures 4-1 and 4-2.

The examination region begins at the inner radius-to-vessel intersection point for clad nozzles, and at the taper-to-vessel intersection point for clad-removed or unclad nozzles (Point A in Figures 4-1 and 4-2). The examination region ends at the point on the inner diameter (ID) corresponding to the point on the outer diameter (OD) where the taper on the nozzle thickness starts (Point B in Figures 4-1 and 4-2).

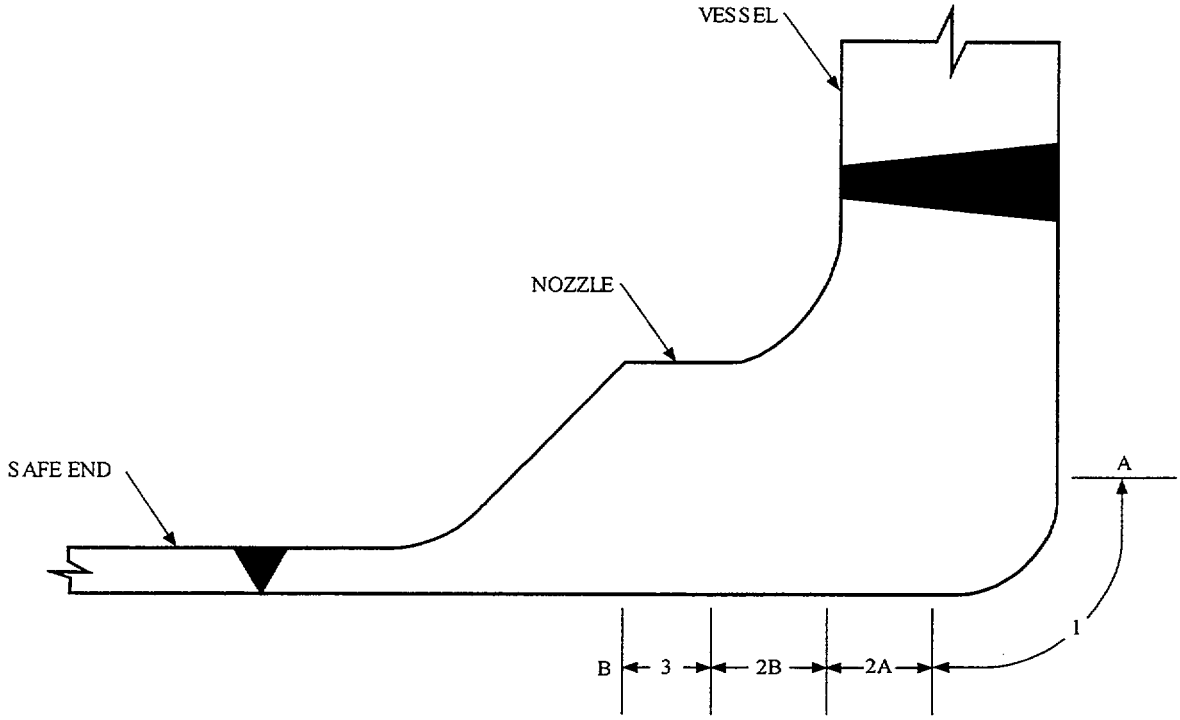

Figure 4-1. Feedwater Nozzle Inspection Zones (Clad Nozzle)

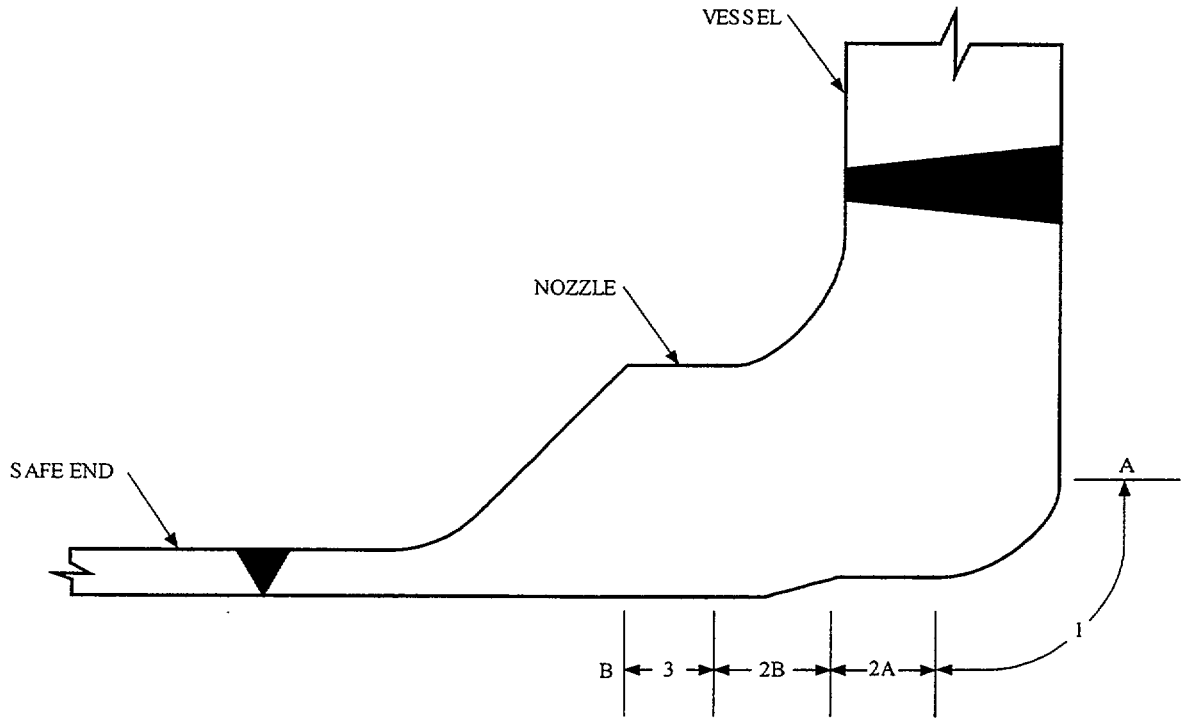

Figure 4-2. Nozzle Inspection Zones (Clad-Removed Nozzle)

One of the following four UT methodologies shall be used for inspection:

1. Manual
2. Automated (gated peak threshold recording)
3. Automated (Full RF logarithmic recording)
4. Phased arrays (no threshold recording)

4.3 UT Technique Qualification

The UT technique shall be able to demonstrate acceptable UT detection and sizing of flaws located on the entire inside surfaces extending from the nozzle inner blend radius to the end of Zone 3. An acceptable UT technique is one that has the ability to reliably detect radially oriented flaws with a depth equal to 0.25 inches for each of Zones 1 through 3. The flaw depth on clad nozzles shall be stated as the depth of the flaw in the base metal.

Depth sizing capabilities shall be demonstrated on a range of flaws in each zone. The depth sizing results may be statistically analyzed. The depth sizing criteria of ASME Section XI, Appendix VIII, when approved, is one method that could be used. However, alternate methods of statistical analysis may be used provided that justification is included.

Technique qualification for detection and sizing need not be a blind test provided that the procedures contain definitive criteria. Furthermore, techniques demonstrated for use at one facility can be used at others, provided applicability is technically justified through modeling or other means.

4.4 Mockup Criteria

When UT techniques are qualified on a mockup without the use of modeling, the specimen thickness should be at least equal to the maximum thickness of the vessel nozzles to be examined, and the ratio of the nozzle thickness to shell thickness should be within ±30% of the ratio for the actual vessel nozzle to be examined.

When the feedwater nozzle inside surface is clad, the inside surface of the nozzle mockup shall also be clad. For clad nozzles, the flaw depth does not include the thickness of the clad.

Flaws in mockups for qualification shall be surface connected. Flaws may be notches and need not be cracks. The aspect ratio (depth to length) of the flaws should be in the range of 0.1 to 0.5.

4.5 Modeling Used for Technique Qualification

Modeling may be used to qualify the UT technique. One form of modeling is where the UT beam paths are predicted using ray tracing algorithms with predetermined beam angle parameters. The beam paths are used to determine the incident angles of the beam on the ID surfaces. The detection of flaws is a complicated physical process, more involved than can be allowed for by a direct application of geometrical ray tracing. Due to this fact, certain limitations must be placed on the incident beam conditions. Modeling should only be used for the qualification of UT techniques when acceptable incident beam angles have been previously determined.

4.6 Personnel Qualification

Personnel performing detection and sizing shall demonstrate their technical proficiency with qualified techniques on full scale mockups.

4.7 Documentation of Inspection Results

The following items shall be documented as a result of the inspection performed:

1. Surfaces that were examined by UT techniques.
2. Description of UT techniques implemented.
3. Technical basis for the UT qualification.
4. Inspection results.
5. Previous inspection results.
6. Nozzle/thermal sleeve configuration.

5.0 TECHNICAL EVALUATION

5.1 Introduction

Fracture mechanics analyses have been routinely used to address fatigue crack propagation in feedwater nozzles as a result of NUREG-0619 requirements. These analyses have been initiated in response to GL 81-11, where provisions were made for performing plant-specific analyses to demonstrate acceptable structural margins in lieu of costly plant hardware modifications. Most of these analyses were modeled after generic fracture mechanics analysis done as a part of the extensive testing and evaluation performed to address the cracking phenomena, as documented in NEDO-21821-A.

The fracture mechanics analyses are a key element in determining revised inspection requirements for feedwater nozzles since they demonstrate the amount of structural margin present in the feedwater nozzle structure. In particular, these analyses provide useful information in establishing inspection frequencies for continued assessment of nozzle structural adequacy. Based on this, the results of BWR fracture mechanics analyses are reviewed here to help establish revised inspection guidelines.

5.2 Survey of Fracture Mechanics Data

In addition to identifying the types of modifications implemented by each participant, the BWROG survey requested the most current fracture mechanics analysis performed for the participants' feedwater nozzles in response to NUREG-0619 and GL 81-11. A discussion of the results, including a graphical summary of crack propagation versus time for each participant, follows.

Eleven of the twenty one plants owned by utilities participating in the BWROG effort for this work provided plant-specific fracture mechanics evaluations which include an evaluation of feedwater nozzle crack growth for the 40 year plant life. These evaluations covered all thermal sleeve/sparger designs currently in use. Most of the fracture mechanics analyses assumed an initial crack size of 0.25 inch, which is the assumed depth at which rapid cycling effects become insignificant. In several cases, actual plant temperature and pressure data for startup, shutdown, and scram transients were used to extrapolate thermal cycles over the forty year plant life; most other cases used the design thermal cycles developed by GE. These thermal cycles were used to

calculate stress intensities and subsequent fatigue crack growth. Stresses and crack depths were iteratively calculated until the thermal cycles expected during the forty year life had been applied. Governing crack growth rates were extracted from Section XI of the ASME Code [6]. Some of the analyses also showed that crack growth using available best-fit data resulted in much lower crack propagation rates than the ASME Code. Most of the fracture mechanics evaluations demonstrated acceptable results for the 40 year plant life.

The allowable crack depth of one inch was reached in 32.3 years in Plant 2. This result was attributed to increased alternating stresses due to the presence of a single thermal sleeve, interference fit sparger design with a clad nozzle. More precise plant data, as well as refined extrapolations of plant duty in the future may yield acceptable crack growth results; however, these findings are consistent with past evaluations for similar clad nozzle configurations.

Plant 10 was evaluated to reach allowable crack depth of one inch in 38.3 years. Although this plant possesses the triple thermal sleeve sparger design, this result was attributed to increased thermal duty based on the extrapolation of only the first four years of plant data over the entire 40 year plant life. This has been shown to be conservative because more frequent operational cycling is typically experienced early in plant life due to "learning curve" effects [7]. Reevaluation of crack propagation using additional years of operating cycle data is expected to result in a forty year crack size of less than one inch.

Plant 11 used an initial crack depth of 1/16" for the crack growth analysis. This value was based on ASME reporting criteria for PT exams; however, it is inconsistent with findings documented in NEDO-21821-A that a minimum crack depth of 0.25" should be assumed. The value of 0.25" is based on assessments which showed that the high cycle thermal effects which led to crack initiation attenuated out at approximately this depth. Allowing for this discrepancy, the crack growth results for Plant 11 are consistent with the results of the other plants.

In addition to the plant specific fracture mechanics analyses described above, several plants applied the generic analysis contained in NEDO-21821-A to their plants by ensuring their flow controller characteristics met those of NEDO-21821-A, and that the expected plant cycles were less severe than those specified in the generic fracture

mechanics assessment contained in NEDO-21821-A. Clearly, use of the generic analysis is an acceptable alternative provided that the applicability of the assumptions (flow characteristics and number of cycles) in NEDO-21821-A is justified.

A plot of the calculated crack growth as a function of time for all eleven of the analyses collected is provided in Figure 5-1. Plant-specific details for each of these cases is provided in Table 5-1. The generic crack growth results from NEDO-21821-A are also included in Figure 5-1 and Table 5-1.

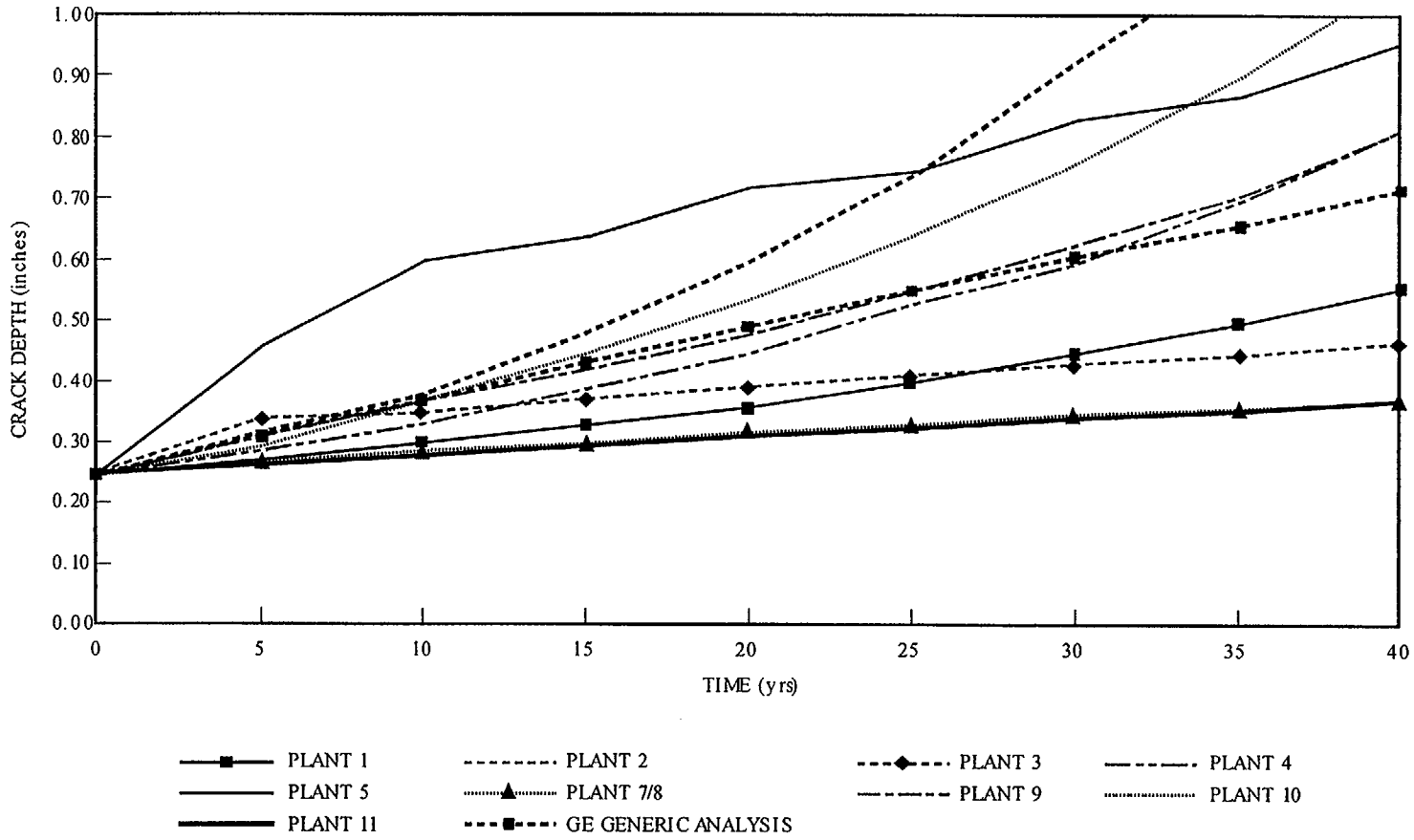

Figure 5-1 Fracture Mechanics Results for Several BWRs

Table 5-1. Fracture Mechanics Analysis Summary

Plant	Nozzle Clad	Sleeve Type	FW Controller	RWCU Alignment	Analysis Cycles
Plant 1	Removed	Single Welded	Original meets 81-11	Single FW line	163 Startup/Shutdowns 323 Scram events. (Extrap. from first 12 yrs)
Plant 2	Clad	Single Interference Fit	Upgraded to digital level control system	Single FW line	183 Startup/Shutdowns 403 Scrams to Hot Stdby (Extrapolated from '75-'88)
Plant 3	Removed	Triple Sleeve	Manual for 5 yrs, Auto thereafter	Single FW line	204 Startup/Shutdown and SCRAM events (all events used same thermal cycles)
Plant 4	Unclad	Triple Sleeve	Original meets 81-11	Both FW lines after 2/83	196 Startup/Shutdowns 418 Scrams to Hot Stdby
Plant 5	Unclad	Single Welded	Original	Both FW lines	103 Startup/Shutdowns 199 Scrams to Hot Stdby
Plant 6	Unclad	Single Sleeve, Double Piston	Replaced in 1988 to eliminate cycling	Recirc Loop B	3 Scrams per Startup/ Shutdown cycle.
Plant 7	Removed 7/80	Triple Sleeve	Original complies with 81-11	Installed in 6/92. Manual control prior.	220 Startup/Shutdown and SCRAM events over 40 yrs. (Not separated)
Plant 8	Removed 7/81	Triple Sleeve	Original complies with 81-11	Single FW lines	Same as for Plant 7.
Plant 9	Unclad	Triple Sleeve	Original	Both FW lines	260 Startup/Shutdown. 468 Scram to Hot Stdby. (26 S/U, 47 SCRAMS w/o low flow cont.)
Plant 10	Unclad	Triple Sleeve	Original	Single FW lines	224 Startup/Shutdowns. 424 Scrams. (Extrapolated from '86-'90)
Plant 11	Clad Removed	Single Sleeve Piston, Double flow baffle	Installed improved low FW Controller 1983	Both FW lines	80 Startup/Shutdowns. 240 Scram to Hot Stdby.
GE Generic Analysis	Unclad	Triple Sleeve	No on/off cycling	Both FW lines	130 Startup/Shutdown. 411 Scram to Hot Stdby.

5.3 Summary of Evaluation Results

Attempts were made to distinguish differences in the results shown in Figure 5-1. However, as can be seen from the figure, the crack growth trend was similar for all of the cases. As a result, separate plots of the results by sparger design (which determined the heat transfer coefficients used), RWCU configuration, or feedwater controller characteristics, did not yield conclusive evidence of similar trends caused by these assumptions. Although some sparger designs caused increased crack growth as a result of higher heat transfer coefficients, this impact was typically offset by using more realistic plant data. The use of more realistic data typically lowered crack growth predictions since the severity of the cycles was less than the generic design cycles routinely used. Although heat transfer coefficients varied between studies, the methodology used to calculate these values was consistent; therefore, it is not believed that the results reflect heat transfer behavior other than that attributed to differing sparger design configurations. Based on these observations, it is clear that the crack growth results are primarily dependent upon the thermal duty used, both in terms of numbers of cycles and the severity of the cycles. The results also demonstrate that with enough refined analysis (i.e., use of plant-specific data), the vast majority of BWRs can demonstrate acceptable results for the entire forty year life. Even for the cases where analysis predicts growth exceeding the allowable flaw size in less than 40 years, new evaluations of these sites using longer periods of operation for plant cycle extrapolation is expected to result in acceptable crack growth results.

No new cracking has been identified in the last fifteen years, as a result of operational changes and enhanced by design changes. Since the changes were implemented all the BWRs have operated successfully for over ten years with no cracks. Even if a crack initiated at this point in time, it is unlikely that the crack would grow to 1-inch over the remaining lifetime of the plant.

5.4 Assessment of Other Crack Locations

All BWR feedwater nozzle fatigue cracking observed to-date in operating plants has been confined to the inner nozzle blend radius and outer nozzle bore (Zones 1, 2a, 2b and 3 in Figures 4-1 and 4-2). As a result, fracture mechanics analyses have been confined to these areas, with the inner radius (Zone 1) being typically used as the limiting location. The degree of thermal cycling was shown to be a function of the leakage rate of feedwater between the thermal sleeve and the feedwater nozzle. Test

and inspection results compiled in NEDO-21821-A relate the range of temperature cycling at various nozzle locations to the leakage rate.

At low leakage rates, which could potentially exist for the single sleeve and triple sleeve spargers with piston rings or welded-in spargers, the temperature fluctuations at the nozzle bore and blend radius were shown to be quite low and nearly identical in value. As a result, little or no crack initiation is expected for low leakage rates. As the leakage rate increases, more cold water is available for mixing and the temperature fluctuations both along the bore and inner blend radius increase. Since the inner blend radius is more directly exposed to the hot reactor water, temperature fluctuations in this region increase more rapidly with increasing leakage rate. As the leakage rate continues to increase, temperature fluctuations at the radius continue to increase while those along the bore decrease. This decrease in bore temperature fluctuations is due to the cold to hot water interface shifting out of the annulus between the thermal sleeve and nozzle.

In addition to the more severe thermal cycling at the nozzle inner blend radius suggested by test results, fracture mechanics analysis of the entire nozzle region also demonstrates the inner blend radius to be limiting. Figure 5-2 provides the fatigue crack growth results for three sections of the nozzle, located from the inner blend radius to the safe end. Section A-A is identical to the Plant 10 results shown in Figure 5-1. Sections B-B and C-C utilize the same cycling inputs as Section A-A, and stress profiles were generated specific to each section from the same finite element results for use in the crack growth analysis.

The results of the stress analysis indicate that the pressure stresses are the highest near the nozzle blend radius (Section A-A in Figure 5-2). The thermal stress due to changes in feedwater temperature is highest somewhat inboard towards the nozzle bore. The combination of the pressure and thermal stresses reaches its highest value in Zone 1 but closer to the line separating Zone 1 and Zone 2. The stresses drop significantly in Zone 3. This is seen in the results of the crack growth analysis which shows little crack growth at Section B-B in Figure 5-2.

The results shown in Figure 5-2 suggest that the nozzle inner blend radius is more limiting from a fracture mechanics point-of-view than other sections located further upstream (i.e., closer to the safe end). Crack growth is highest in Zone 1 with somewhat smaller growth in Zone 2. Crack growth in Zone 3 is less significant, with

negligible growth closer to the safe end (Section B-B). This is consistent with the stress profiles as discussed before. Therefore, for Zones 1 and 2, the inspection frequencies should be conservatively based upon the fracture mechanics analysis results of cracks which initiate at the blend radius. However for Zone 3, because of the lower predicted crack growth, a reduced inspection frequency can be justified. No additional inspections (over and above ASME Code requirements) are required in regions beyond Zone 3 (see Table 6-1).

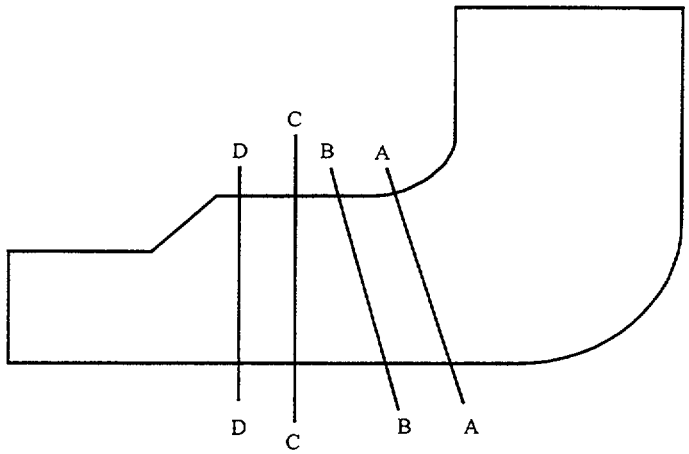

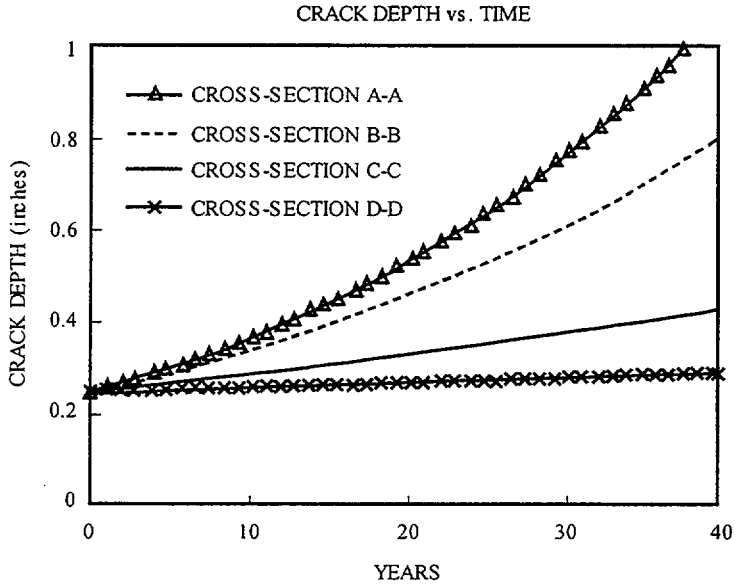

Figure 5-2. Comparison of Crack Growth Results for Different Nozzle Locations

5.5 Leakage Monitoring

Several BWR plants have implemented thermal sleeve bypass leakage detection systems since the time NUREG-0619 was published. Such systems were still under development at the time NUREG-0619 was published, but preliminary testing and implementation of the systems at that time suggested them to be feasible and practical. The intent of these systems was to detect significant leakage through degraded thermal sleeve seals or cracks in thermal sleeve welds. This detection was accomplished by relating exterior surface metal temperatures (from newly installed thermocouples) to leakage flow. Leakage monitoring was expected to be beneficial system to employ, since it might provide the most direct assessment of conditions known to lead to nozzle fatigue cracking.

Leakage monitoring systems have not been implemented as consistently as anticipated at the time NUREG-0619 was published. This has been primarily due to high installation and maintenance costs, coupled with field experience suggesting that the cracking problem had been eliminated. In addition, erroneous leakage readings can be common with these systems due to sensor movement, which has led to unnecessary leakage concerns. Systems which have continued to operate properly have continued to show leakage to be insignificant. These results have further verified observations of no sparger cracking.

Based on these results, leakage monitoring does not possess the necessity and promise it once had. Nevertheless, for those installations that continue to operate properly, it does remain a viable method of further assessing the presence of fatigue cracking in nozzles. Therefore, for those plants that have such systems, leakage data obtained from these systems can be used to further enhance the technical argument used to establish inspection frequency.

5.6 Summary of Technical Assessment

Based on the fracture mechanics results reviewed above, as well as accumulated field experience and inspection results, the conclusions reached by analysis appear to be consistent with field observations. It is clear from the analyses reviewed that the governing parameter is the cyclic duty used in the analysis. All of the plant-specific considerations discussed in Section 3.0 of this report are also important, but their effects are well understood and typically incorporated into analyses by the use of standard analytical methods. Based on this and all of the discussion given above,

the following conclusions are made with respect to continued technical evaluations regarding fatigue cracking in feedwater nozzles:

(1) Plant-specific fracture mechanics analysis is necessary for demonstrating adequate structural margins and applying the alternate inspection requirements defined in this report. However, application of the generic fracture mechanics analysis in NEDO-21821-A is an acceptable alternative provided that the applicability is justified.

(2) The fracture mechanics analysis should factor into account all relevant plant-specific considerations such as thermal sleeve/sparger design, the presence of nozzle cladding, RWCU system alignment and actual plant cyclic duty (both number of events and magnitude of events).

(3) A comparison of actual plant thermal duty should be made with the duty used in the fracture mechanics analysis to ensure the analysis bounds actual plant operation.

(4) All applicable locations (Zones 1 through 3 in Figures 4-1 and 4-2) should be considered in the fracture mechanics analysis such that the limiting location is determined. The predicted crack growth is highest in Zones 1 and 2. Crack growth, in Zone 3 is significantly lower.

(5) An initial crack depth of 0.25 inch or the minimum depth reliably detected by the applied UT technique, whichever is greater, should be used as a starting point for the crack growth portion of the fracture mechanics analysis.

(6) The fatigue crack growth curves from Section XI of the ASME Code should be utilized in the fracture mechanics analysis. Use of alternate curves is permitted, provided adequate technical support is provided.

(7) Leakage monitoring may be used to further support or increase the inspection interval; however, regardless of leakage monitoring results, the longest inspection interval recommended by this report is the 10 year interval specified by the ASME Code.

The review of eleven plant-specific and the GE generic fracture mechanics evaluations show there is significant margin available to the allowable flaw depth of one inch. Therefore, extending the period between inspections is justified.

6.0 CONCLUSIONS AND RECOMMENDATIONS

6.1 Conclusions

NUREG-0619 recommended feedwater nozzle and sparger inspection criteria based upon confidence in particular sparger designs and inspection methodology available at the time it was written. The guidelines in NUREG-0619 recommend both UT and PT inspections for all sparger designs in addition to visual inspections. Although the NUREG-0619 recommendations seemed prudent at the time they were published to ensure the cracking phenomena was sufficiently understood and addressed, analysis, test, and inspection results, along with UT technique improvements since that time, now suggest that the original recommendations are overly conservative and oftentimes burdensome for plant owners. Furthermore, the high personnel exposure associated with feedwater nozzle PT examination and the associated vessel drain down and sparger removal is significant. Given the critical need to meet as low as reasonably achievable (ALARA) requirements, alternate guidelines that reflect current inspection technology, field experience, and up to date analytical evaluations, while still ensuring structural adequacy are appropriate.

Section XI of the ASME Code provides inspection guidelines for in-service inspection of nuclear reactor components to continually assess the structural adequacy of these important reactor components over the design life of the plant. Feedwater nozzle and sparger inspection criteria were modified by NUREG-0619 to be more frequent and extensive than Section XI criteria when fatigue cracking appeared to be a threat to maintaining structural adequacy. Guidelines were therefore established to ensure that cracks in the feedwater nozzle would be reliably detected and would not propagate to depths greater than the allowable value using analysis methodology consistent with Section XI of the ASME Code. This practice is consistent with Section XI philosophy that shallower flaws do not impact the safety margin established for the pressure vessel. The modified guidelines established by NUREG-0619 were adequate based on the technology and methods available at that time.

When NUREG-0619 was published, only PT inspections followed by local grinding could accurately identify the presence and depth of smaller crack indications in the feedwater nozzle. However, as discussed in Section 4 of this report, modern ultrasonic testing techniques are now capable of accurately locating and sizing cracks

as small as 0.25 inch in depth. Additionally, as discussed in Section 5 of this report, fracture mechanics evaluations which factor in actual plant cyclic duty routinely demonstrate that these small flaws do not reach allowable depth throughout the majority of the plant design life. Consequently, with the use of these modern UT techniques coupled with plant-specific fracture mechanics assessments that utilize actual plant thermal cyclic duty, the need for routine PT exams can be eliminated and the frequency of UT exams can be reduced.

6.2 Recommendations

The recommendations which follow are based upon the current state of UT technology and results of plant-specific fracture mechanics analyses of feedwater nozzles. The two major contributors to mitigation of feedwater nozzle cracking have been previously identified as implementation of operational improvements (e.g., better feedwater controllers, RWCU reroute) and replacement of original loose fit spargers with improved designs which have been effective in eliminating leakage. Most BWR plants have implemented these modifications to various degrees, and field experience over the past 15 years has demonstrated that the fatigue cracking phenomena previously experienced by many BWR plants has been effectively eliminated.

To ensure adequate protection of the reactor pressure vessel while minimizing personnel exposure levels, the NUREG-0619 feedwater nozzle inspection guidelines can be modified as shown in Table 6-1. As shown in Table 6-1, the revised inspection frequencies are a function of continued successful examination results and the type of UT examination performed, as well as the results of updated plant-specific fracture mechanics assessments. To be consistent with ASME Code, Section XI philosophy, inspection intervals have been set to a specified fraction of the time interval obtained from the fracture mechanics evaluation. This guideline sets the maximum possible inspection interval to 10 years if a plant-specific fracture assessment demonstrates acceptable results. Another factor which influences inspection frequency is sparger type; inspection intervals for plants with these configurations were selected to be consistent with NUREG-0619 guidelines for the same configurations. The revised inspection intervals begin at the time when a qualified inspection plan that meets the requirements of this report is established and implemented.

The inspection intervals in Table 6-1 apply to Zones 1 and 2 and reflect the fact that the predicted crack growth is highest in this area. The inspection intervals are based on a fraction (which in turn is dependent on the inspection technique) of the time required for a 0.25 inch crack to reach the allowable value. Since the predicted growth for Zone 3 is significantly lower than that for Zone 1, it is recommended that the inspection interval for Zone 3 be twice the value for Zone 1.

Finally the UT inspection interval factor for the improved sparger design is set at 0.33 for UT methods 3 and 4 (Automated UT and Phased Array, both with no threshold). For these methods, the inspection interval is 0.33 times the period for which a 0.25 inch postulated crack in the blend radius is predicted to reach the allowable depth. For manual or Automated UT with threshold recording, the UT inspection interval factor is lower as shown in Table 6-1 since these techniques are deemed to be somewhat less effective.

Plants which do not utilize examination techniques and analytical evaluations as discussed in the report should continue to utilize the requirements specified in NUREG-0619.

6.3 Implementation Schedule

Licensees that have conducted examinations utilizing, methods/techniques that have been demonstrated to satisfy the requirements of Section 4.0 can apply the examination frequency specified in Table 6-1, not to exceed 10-years. Licensees that have not demonstrated their methods/techniques will continue to meet the provisions of NUREG-0619. This schedule is applicable until such time that 10CFR50.55a is revised to require implementation of ASME Section XI, Appendix VIII.

Beginning with the first examination after compliance with Appendix VIII is required, licensee's examinations will be in accordance with the provisions of ASME Section XI, Appendix VIII as mandated by 10CFR50.55a. The examination frequency from that point forward will be the ASME Section XI examination frequency except for those plants with interference fit spargers. These plants must use the examination frequency specified in Table 6-1, or as specified in NUREG-0619.

Table 6-1. Feedwater Nozzle/Sparger Inspection Recommendations[1]

Thermal Sleeve/Sparger Design Configuration	UT Inspection Interval Factor[2] for Zones 1 and 2			Visual Inspection of Sparger[4]
	Method 1[3]	Method 2[3]	Methods 3 or 4[3]	
Interference fit, clad nozzle	0.05	0.10	0.20	2
Welded, clad nozzle	0.10	0.17	0.33	2
Single thermal sleeve, single piston ring, unclad nozzle	0.10	0.17	0.33	4
Oyster Creek and Nine Mile Point 1 (unclad nozzle, significantly modified spargers installed)	0.10	0.17	0.33	4
Welded, unclad nozzle	0.10	0.17	0.33	4
Triple sleeve, double piston ring, unclad nozzle	0.10	0.17	0.33	4
Other Configurations	see note (5)	see note (5)	see note (5)	see note (5)

Notes: (1) The inspection interval is to begin at the time when a qualified inspection plan that meets the requirement of this report is established and implemented. The need for routine PT exams is eliminated.

(2) For each configuration, the maximum inspection interval is defined by a fraction of the time until a 0.25 inch or greater depth crack reaches the appropriate allowable value, as obtained from a plant-specific fracture mechanics analysis following the recommendations of Section 5.6 of this report. For example (when Method 3 is used):

Sparger Design = Triple Thermal Sleeve
Fracture Mechanics Result = 0.25" crack grows to allowable depth in 30 years
Required UT Inspection Interval = Allowable time x Factor
= 30 x 0.33 = 10 years

For Zones 1 and 2, in no case shall the maximum allowable time between inspections exceed 10 years. For Zone 3, the inspection intervals can be twice the value recommended for Zones 1 and 2. The inspection frequency is not required to be more often then every second cycle regardless of interval factor.

(3) The UT methods are defined as follows:

Method 1 = Manual
Method 2 = Automated, Threshold Recording
Method 3 = Automated, Full RF Recording (No Threshold)
Method 4 = Phased Array (No threshold)

(4) Visual inspection of flow holes and welds in sparger arms and sparger tees. These requirements are the same as those specified in NUREG-0619.

(5) Other configurations not specifically identified here should be evaluated on a case-by- case basis.

7.0 REFERENCES

[1] U.S. Nuclear Regulatory Commission, "BWR Feedwater Nozzle and Control Rod Drive Return Line Nozzle Cracking," USNRC Report NUREG-0619, November 1980.

[2] U.S. Nuclear Regulatory Commission, "All Power Reactor Licensees and License Applicants," USNRC Generic Letter 81-11, February 20, 1981.

[3] General Electric Company, "Feedwater Nozzle Interim Examination Recommendation," GE Services Information Letter (SIL) No. 207, November 1976.

[4] General Electric Company, "Boiling Water Reactor Feedwater Nozzle/Sparger Final Report," GE Report NEDO-21821-A, Class I, February 1980.

[5] U.S. Nuclear Regulatory Commission, "Interim Technical Report on Feedwater and Control Rod Drive Return Line Nozzle Cracking," USNRC Report NUREG-0312, July 1977.

[6] American Society of Mechanical Engineers, ASME Boiler and Pressure Vessel Code, Section XI, "Rules for In-service Inspection for Nuclear Power Plant Components."

[7] General Electric Company, "BWR Reactor Vessel Cyclic Duty Monitoring," GE Services Information Letter (SIL) No. 318, December 1979.