Tennessee Valley Authority, Post Office Box 2000, Soddy-Daisy, Tennessee 37379

June 6, 2000

10 CFR 50.50a(g)(3)(ii)

U. S. Nuclear Regulatory Commission
ATTN: Document Control Desk
Washington, D. C. 20555

Gentleman:

In the Matter of) Docket No. 50-327
Tennessee Valley Authority)

SEQUOYAH NUCLEAR PLANT (SQN) - AMERICAN SOCIETY OF MECHANICAL ENGINEERS (ASME) SECTION XI INSERVICE INSPECTION (ISI) RELIEF REQUEST FOR UNIT 1 STEAM GENERATOR (SG) EXAMINATIONS

In accordance with the provisions of 10 CFR 50.55a(a)(3)(ii), TVA requests relief from the ASME Section XI code nondestructive examination requirements associated with SQN Unit 1 SG examinations. The SQN ISI Program requires two Class 1 nozzle inside radius sections and one Class 2 shell circumferencial weld to be examined during the second period of SQN's current second 10-year interval. Performance of these examinations constitutes a hardship, as described in the enclosed relief request (1-ISI-16), without a compensating increase in the level of quality and safety.

Inspection of these Class 1 sections and a Class 2 weld is the last required ISI to be performed within SQN's second ISI period (SQN's second ISI period ends December 2002). TVA plans to replace SQN's Unit 1 SGs during the first refueling outage of the third ISI period (first refueling outage is Unit 1 Cycle 12, scheduled to begin March 2003). Accordingly, TVA seeks relief from code requirements for only four months (December 2002 to March 2003).

Based on the short remaining service life of the SGs prior to replacement, performance of these examinations will not serve a useful purpose for demonstrating structural integrity. In addition, the subject sections/weld were examined previously during SQN's first 10-year interval. Accordingly, TVA is requesting relief from the ASME code requirements associated with these examinations.

A047

RGN-001

NRC response is requested by March 2001 to support ISI activities during the Unit 1 Cycle 11 refueling outage. This date will support TVA's schedule for planning ISIs during this outage. TVA's submittal is similar to an effective two-year relief from code requirements that was approved for South Texas Project by letter dated August 23, 1999.

Enclosure 1 provides the subject relief request and an attachment that contains a drawing of the subject SG welds. Enclosure 2 provides related ASME code pages.

If you have any questions regarding this response, please contact me at extension (423) 843-7071 or J. D. Smith at extension (423) 843-6672.

Sincerely,

Pedro Salas
Licensing and Industry Affairs Manager

Enclosures
cc (Enclosures):

Mr. R. W. Hernan, Project Manager
Nuclear Regulatory Commission
One White Flint, North
11555 Rockville Pike
Rockville, Maryland 20852-2739

NRC Resident Inspector
Sequoyah Nuclear Plant
2600 Igou Ferry Road
Soddy-Daisy, Tennessee 37384-3624

Regional Administrator
U.S. Nuclear Regulatory Commission
Region II
Atlanta Federal Center
61 Forsyth Street, SW, Suite 23T85
Atlanta, Georgia 30303-3415

Enclosure

SEQUOYAH NUCLEAR PLANT(SQN) UNIT 1 REQUEST FOR RELIEF 1-ISI-16

Executive Summary:

This request for relief addresses two steam generator (SG) Class 1 (primary side) nozzle inside radius sections and one SG Class 2 shell circumferential weld which are scheduled for examination in the second period of SQN's Unit 1 second 10-year ISI interval. Performance of these Section XI examinations for the second period would not serve a useful purpose because TVA is planning to replace the current Unit 1 SGs. Compliance with these requirements would result in a hardship without a compensating increase in the level of quality and safety.

Inspection of these Class 1 sections and a Class 2 weld is the last required ISI to be performed within SQN's second ISI period (SQN's second ISI period ends December 2002). TVA plans to replace SQN's Unit 1 SGs during the first refueling outage of the third ISI period (first refueling outage is Unit 1 Cycle 12, scheduled to begin March 2003). Accordingly, the timeframe relief from code requirements is in effect for four months (December 2002 to March 2003).

An American Society of Mechanical Engineers (ASME) Section XI code requirement for performing visual (VT-2) examinations on the subject welds for leakage during system pressure tests (Examination Category B-P for Class 1 and C-H for Class 2) will be satisfied for SQN Unit 1 SGs in the current inspection interval. These examinations will provide detection of leakage and help assure the structural and leak-tight integrity of the entire pressure boundary of SQN's SGs. These code examinations will provide reasonable assurance of an acceptable level of quality and safety for continued operation.

Therefore, pursuant to 10 CFR 50.55a(a)(3)(ii), it is requested that relief be granted for SQN's second ISI interval.

Unit:	1
System:	Reactor Coolant - System 68
Components:	SGs: Two Class 1 Nozzle (inlet and outlet) Inside Radius Sections and One Class 2 Shell Circumferential Weld
ASME Code Class:	ASME Code Class 1 and 2 (Equivalent)
Section XI Edition:	1989 Edition
Code Table:	IWB-2500-1 and IWC-2500-1
Examination Category:	B-D, Full Penetration Welds of Nozzles in Vessels C-A, Pressure Retaining Welds in Pressure Vessels
Examination Item Number:	B3.140, SG Class 1 Nozzle Inside Radius Section C1.10, Class 2 Shell Circumferential Weld
Code Requirement:	ASME Section XI, Table IWB-2500-1, Examination Category B-D, Item Number B3.140, Requires Volumetric Examination ASME Section XI, Table IWC-2500-1, Examination Category C-A, Item Number C1.10, Requires Volumetric Examination

Code Requirement From Which Relief Is Requested:

Relief is requested from the ASME Section XI Code, Table IWB-2500-1, Examination Category B-D, requirements for volumetric examination of two Class 1 nozzle inside radius sections and Table IWC-2500-1, Examination Category C-A volumetric examination requirements of Class 2 shell circumferential weld.

List Of Items Associated With The Relief Request:

SG No. 4 - Class 1 nozzle inside radius section

Nozzle inside radius section no. SG-4-C-IR
Nozzle inside radius section no. SG-4-H-IR

SG No. 2 - Class 2 shell circumferential weld:

Shell circumferential weld no. SGW-D2 (lower shell section to transition cone weld)

Basis For Relief:

During the first inspection interval, all eight of the Class 1 nozzle inside radius sections were examined. Additionally, during the first period of SQN's current second inspection interval, two of the Class 1 nozzle inside radius sections were reexamined. These Class 1 nozzle inside radius section examinations yielded acceptable results.

During SQN's first inspection interval, the number of SG Class 2 shell circumferential welds requiring examination was equal to the number of welds on one of the SGs. All of these Class 2 shell circumferential weld examinations yielded acceptable results.

In accordance with ASME Section XI, two of the Class 1 nozzle inside radius sections and one Class 2 shell circumferential weld is scheduled for reexamination in the second period of SQN's second 10-year inspection interval. The SQN Unit 1 SGs are scheduled to be replaced during the third inspection period of the second inspection interval (during the Cycle 12 refueling outage). Compliance with the ASME Section XI examination requirements for the two Class 1 nozzle inside radius sections and the one Class 2 shell circumferential weld would result in a hardship. The hardships are increased personnel radiation exposure and increased resources and outage cost without a compensating increase in the level of quality and safety.

For the new SQN Unit 1 replacement SGs, TVA plans to perform ASME Section XI preservice examinations on applicable replacement SG welds, nozzle inside radius sections, and replaced piping connection welds.

Alternative Examination:

The ASME Section XI code requirement for visual (VT-2) examination for leakage during system pressure tests in accordance with Examination Category B-P (Class 1 side) and C-H (Class 2 side) will be performed on SQN's Unit 1 SGs following each Unit 1 refueling outage. These inspections for leakage provide assurance for structural and leak-tight integrity of the entire pressure boundary for SQN's Unit 1 SGs until they are replaced.

Justification For The Granting Of Relief:

There are two Class 1 nozzle inside radius sections in each of the four SQN Unit 1 SGs. During SQN's first inspection interval, all eight of these sections were volumetrically examined. Additionally, during the first period of the second inspection interval two of these sections were reexamined. With regard to Class 2 SG shell circumferential weld, this weld was volumetrically examined during the first inspection interval. The results of these volumetric examinations were acceptable.

All the subject examination areas are within the test boundary of the VT-2 examinations that are performed periodically with the Class 1 and 2 pressure tests.

In view of the acceptable results from prior examinations of these Class 1 nozzle radius inside sections, the Class 2 shell circumferential weld, and the required VT-2 examinations that will be performed during refueling outages on these areas, the proposed request for relief from code requirements is not expected to provide additional information that would increase the level of quality and safety for operation of Unit 1 SGs.

Four Unit 1 SGs at SQN are planned to be replaced during the third period of the second inspection interval. TVA plans to perform ASME Section XI preservice examinations on applicable replacement SG welds, nozzle inside radius sections, and replaced piping connection welds upon installation of the new SGs.

The SG Class 1 and 2 welds and nozzle inside radius sections required for examination during the second inspection interval are summarized in Table 1.

Table 1

Second Inspection Interval Examinations for the Unit 1 SGs

Section XI Examination Category and Item Number	Description	To be examined during the Interval	Number to be Examined in The Interval	Examination First Period	Examination Second Period	Examination Third Period All S/Gs to be replaced in this period
Category B-B Item Number B2.40	SG Tubesheet-to-Head Weld	One SG	One Tubesheet-to-Head Weld	1	0	0
Category B-D Item Number B3.140	SG Primary Side Nozzle Inside Radius Section	Four SGs	Eight Nozzles Inside Radius Section	2	2 These are addressed by this Relief Request	4
Category B-G-2 Item Number B7.30	SG Bolts, studs, and Nuts <= 2 inches in diameter	One SG	Two Manways	1	0	1
Category C-A Item Number C1.10	SG Pressure Retaining Shell Circumferential Welds	One SG or Distributed among the SGs	Three Shell Circumferential Welds	1	1 This weld is addressed by this Relief Request	1
Category C-A Item Number C1.20	SG Pressure Retaining Head Circumferential Welds	One SG	One Head Circumferential Weld	1	0	0
Category C-A Item Number C1.30	SG Tubesheet-to-Shell Weld	One SG	One Tubesheet-to-Shell Weld	1	0	0
Category C-B Item Number C2.21	SG Class 2 Nozzle to Shell Weld	One SG	Two Nozzle to Shell Welds	1	1	0
Category C-B Item Number C2.22	SG Class 2 Nozzle Inside Radius Section for nozzles greater than 12 inches nominal pipe size	One SG	Two Nozzles Inside Radius Section	1	1	0
Total examinations scheduled on the SGs during the second inspection interval				9	5 Three exams affected by this Relief Request	6

Additionally, during the current ISI interval, nondestructive examination (NDE) has been performed, with acceptable results, on several other vessel welds of the same type and configuration (i.e., same examination category and item number) as those specified above for which relief is requested. Table 2 below summarizes the additional NDE performed on other Unit 1 vessels (i.e., residual heat removal heat exchanger and containment spray heat exchanger) as well as the Unit 2 SG and other vessel welds. Table 2 indicates there are 13 vessel welds and other vessel examination areas for each examination category and item number applicable to the two examination areas for which relief is being requested. These examinations are sufficient to demonstrate the structural integrity of the shell circumferential weld and the two nozzles inside radius section of the Unit 1 SGs until they are replaced in the third period of the second inspection interval.

Table 2

Summary of Completed ISI Examinations on SQN Units 1 and 2 Class 1 and 2 Vessel Welds of the Applicable Examination Category and Item Number

Section XI Examination Category and Item Number	Number of SQN Unit 1 Class 1 and 2 Vessel Welds and Examination Areas Addressed by This Relief Request	Number of SQN Unit 1 and 2 Class 1 and 2 Vessel Welds and Examination Areas Already Examined in the Second Inspection Interval	Number of SQN Unit 1 and 2 Class 1 and 2 Vessel Welds and Examination Areas to be Examined in the Second Inspection Interval
Examination Category B-D Item Number B3.140	2	Steam Generators (6)	Steam Generators (16)
Examination Category C-A Item Number C1.10	1	Steam Generators (4) CS Heat exchangers (1) RHR heat exchangers (2)	Steam Generators (6) CS Heat exchangers (4) RHR heat exchangers (2) Seal water heat exchangers (2)
Totals	3	13	30

Specific Considerations:

The ASME Section XI examinations of Class 1 and Class 2 SG welds and nozzle inside radius sections and other examination areas performed each ISI interval serve two purposes. First, the NDE results demonstrate the continuing structural integrity of these welds and adjacent base material and qualify the component for continued operation until the next required examination. Second, the NDE results provide documentation of the "NDE signature" of the examination volume or area (e.g., geometric reflectors, acceptable flaws) with current NDE technology that can be used for comparison with future ISI examination results. The NDE performed in the current inspection interval on SGs and other similar vessel welds, along with the system pressure tests and inspections for leakage, provide an adequate demonstration of the structural integrity of the Unit 1 SGs. These examinations and tests are adequate to justify the continued operation of these SGs for their short remaining service life without performing the code examinations specified above.

Since the Unit 1 SGs are planned to be replaced at the end of the second ISI interval, performance of the inservice examinations on the specified welds provides no value in documenting the weld signature with current NDE technology. Performance of these inservice examinations will require extensive plant resources and significantly increase the cumulative radiation dosage to plant personnel. Engineering resources are required to perform, review, approve, and report the examination results; Plant Modification resources are required to plan and coordinate the NDE and logistic support (e.g., scaffolding, insulation removal, and replacement). Relief from these code examinations is estimated to reduce personnel radiation exposure by one to two person-rem.

TVA's request for relief from the ASME Section XI ISI requirements is applicable to two Unit 1 SGs. The examinations involve two Class 1 nozzle inside radius sections and one Class 2 shell circumferential weld. These examinations are due during the second period of SQN's second ISI interval. The performance of these inservice examinations constitute a hardship without a compensating increase in the level of plant operation quality and safety. Accordingly, TVA is proposing relief from the code requirements on the basis of 10CFR50.55a(a)(3)(ii).

Elimination of these inservice examinations will have a negligible effect on plant safety. Historically, catastrophic failures of such vessel welds are rare. In view of the successful operation, examination, and testing of these SGs for 15 years, the probability of an undetected fault propagating to failure prior to SG replacement is remote. Through-wall leaks would be expected to be detected by visual examination or plant instrumentation prior to a major failure of the pressure boundary. The plant is designed to achieve cold shutdown conditions for all credible primary or secondary side pressure boundary failures. The Sequoyah probabilistic risk analysis indicates that even with a conservative initiating event frequency, large loss-of-coolant accidents are a minor contributor to plant risk.

Based on these justifications, relief is requested from the ASME Section XI ISI requirements for the two SG Class 1 nozzles inside radius sections and the one SG Class 2 shell circumferential weld examinations on Unit 1 in the second period of the second inspection interval.

Implementation Schedule:

This request for relief is applicable to the second 10-year ISI interval for SQN Unit 1.

Reference:

Attachment 1 - ISI Program Drawing

ATTACHMENT 1

ISI PROGRAM DRAWING

REFERENCE DRAWINGS
CONTRACT NO. 68C60-91934 N2M-2-4
STEAM GEN MANUAL (FIG.5-1)

ASME CC-1 (EQUIVALENT)
ASME CC-2 (EQUIVALENT)

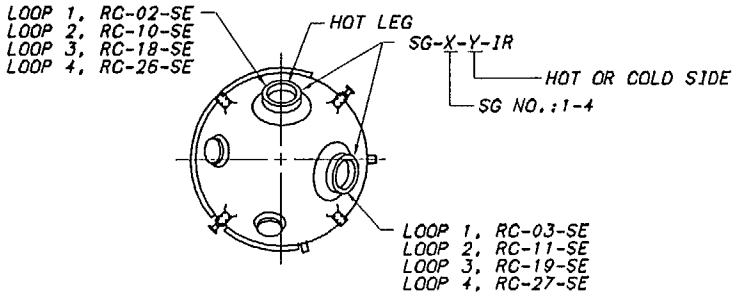

NOTES:

1. FOR UNIT 2 DWG SEE ISI-0401-C
2. THIS DWG SUPERCEDES CHM-2345-B (FOR UNIT 1 ONLY)
5. STEAM GENERATOR NOZZLE SAFE END TO PIPE WELD ID'S ARE SHOWN ON RC MAIN LOOP DWG ISI-0482-C. THESE ARE CLASSIFIED AS ASME SECTION XI CATEGORY B-F. (i.e. RC-02) THE EXAMINATION OF THESE WELDS IS INCLUDED IN THE EXAMINATION OF THE NOZZLE SAFE END WELD.
6. STEAM GENERATOR NOZZLE TO SAFE END WELD ID'S SHOWN ON THIS DWG ARE ASME SECTION XI EXAM CATEGORY B-F, DISSIMILAR METAL WELDS. (i.e. RC-02-SE) 3

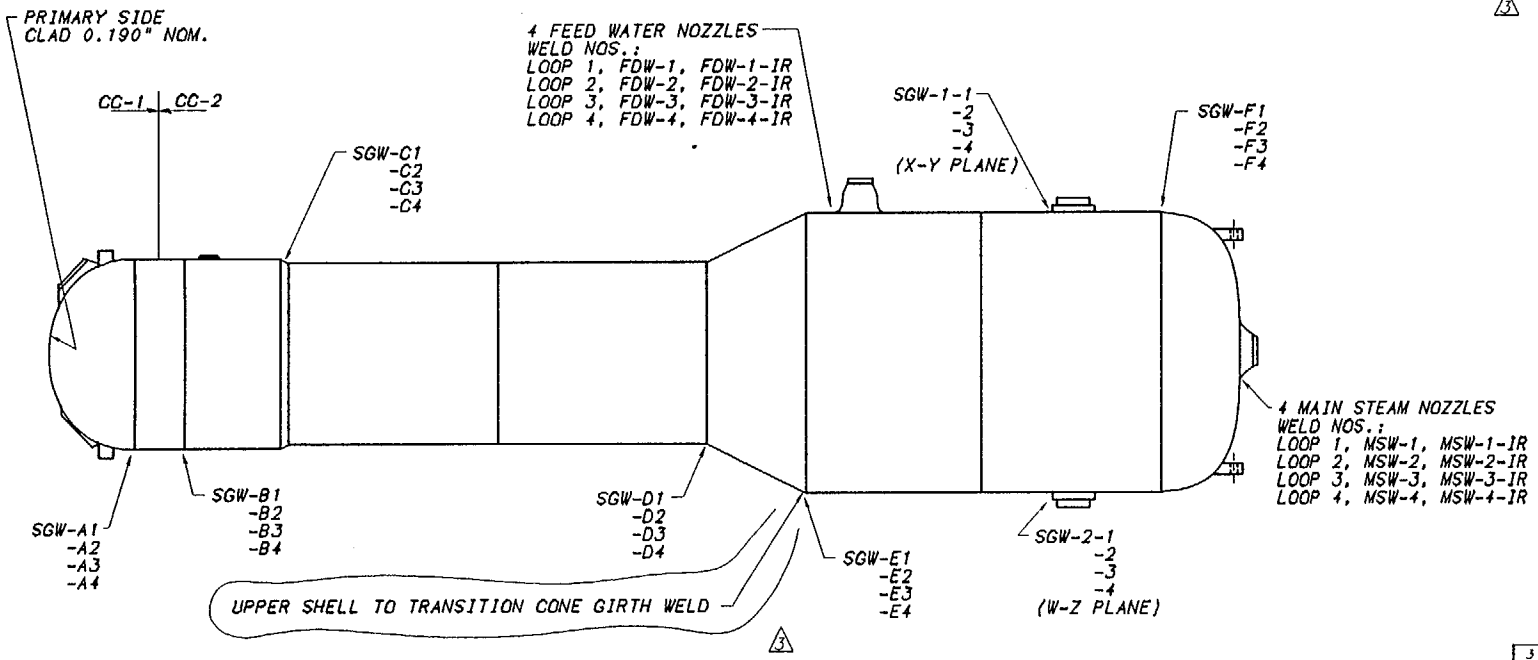

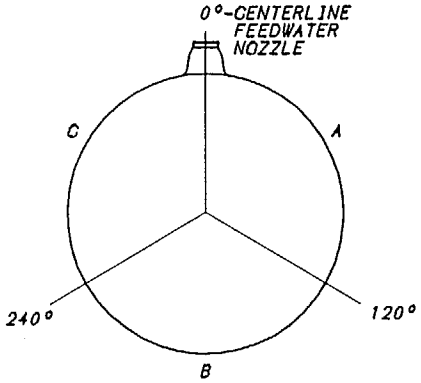

TOP VIEW

ASME CC-1 MATERIAL SPECIFICATIONS

THE TUBE PLATE IS A SA-508, CLASS 2, STEEL FORGING CLAD ON THE PRIMARY SIDE WITH NiCrFe ALLOY. THE HEMISPHERICAL CHAMBER IS A SA-216, GR. WCC CASTING, CLAD WITH AUSTENITIC STAINLESS STEEL.

THE STEAM GENERATOR PRIMARY INTEGRALLY CAST NOZZLES ARE FABRICATED TO SA-216, GR. WCC THE NOZZLES HAVE BUTTERED 308L SAFE ENDS.

ASME CC-2 MATERIAL SPECIFICATIONS

THE VESSEL SHELL SECTIONS ARE FABRICATED OF SA-533, GR. A CLASS 1, STEEL PLATE.

THE VESSEL HEAD SECTION IS FABRICATED OF SA-533, GR.A, CLASS 1, STEEL PLATE.

EACH STEAM GENERATOR INCLUDES ONE FEEDWATER NOZZLE (3.62 INCHES NOMINAL WALL THICKNESS) AND ONE MAIN STEAM NOZZLE (3.62 INCHES NOMINAL WALL THICKNESS). ALL OF THE NOZZLES ARE FABRICATED OF SA-508, CLASS 2, STEEL.

REV	BY	CHECKED	SUBMITTED	APPROVED	DATE
3	RPG				
CORRECT NOTE 6 AND ADD NOTE TO WELD PER FCDI 96-17					
2	RPG	EDC	FRS	GLW	12-16-95
CHANGE NOTE 5. ADD MAT'L DESC., ADD CLAD DIMENSION & CLASS BREAK REMOVE WELD PORTIONS AND NOTES 3 & 4					
1	PHB	EDC	JCG	GLB	12-9-91
REVISE NOTES. ADD PRISIM 0'S					

TENNESSEE VALLEY AUTHORITY

SEQUOYAH NUCLEAR PLANT
UNIT 1
STEAM GENERATOR

DRAWN: RPG	DATE: 3-27-91	SCALE: NOT TO SCALE	
CHECKED: PHB	APPROVED: RME	CAD MAINTAINED DRAWING	REV
SUBMITTED: EDC	ISI-0399-C-01		03

ENCLOSURE 2

APPLICABLE ASME CODE PAGES

TABLE IWB-2500-1 (CONT'D)
EXAMINATION CATEGORIES

EXAMINATION CATEGORY B-D, FULL PENETRATION WELDS OF NOZZLES IN VESSELS — INSPECTION PROGRAM B							
					Extent and Frequency of Examination		
Item No.	Parts Examined	Examination Requirements/ Fig. No.	Examination Method	Acceptance Standard	1st Inspection Interval[2]	Successive Inspection Intervals, 2nd, 3rd, 4th[2]	Deferral of Inspection to End of Interval
	Reactor Vessel						
B3.90	Nozzle-to-Vessel Welds	IWB-2500-7[4]	Volumetric	IWB-3512	All nozzles[1]	All nozzles[1]	Permissible[3]
B3.100	Nozzle Inside Radius Section	IWB-2500-7[4]	Volumetric	IWB-3512	All nozzles[1]	All nozzles[1]	Not permissible
	Pressurizer						
B3.110	Nozzle-to-Vessel Welds	IWB-2500-7[4]	Volumetric	IWB-3512	All nozzles[1]	All nozzles[1]	Not permissible
B3.120	Nozzle Inside Radius Section	IWB-2500-7[4]	Volumetric	IWB-3512	All nozzles[1]	All nozzles[1]	Not permissible
	Steam Generators (Primary Side)						
B3.130	Nozzle-to-Vessel Welds	IWB-2500-7[4]	Volumetric	IWB-3512	All nozzles[1]	All nozzles[1]	Not permissible
B3.140	Nozzle Inside Radius Section	IWB-2500-7[4]	Volumetric	IWB-3512	All nozzles[1]	All nozzles[1]	Not permissible
	Heat Exchangers (Primary Side)						
B3.150	Nozzle-to-Vessel Welds	IWB-2500-7[4]	Volumetric	IWB-3512	All nozzles[1]	All nozzles[1]	Not permissible
B3.160	Nozzle Inside Radius Section	IWB-2500-7[4]	Volumetric	IWB-3512	All nozzles[1]	All nozzles[1]	Not permissible

NOTES:
(1) Includes nozzles with full penetration welds to vessel shell (or head) and integrally cast nozzles, but excludes manways and handholes either welded to or integrally cast in vessel.
(2) At least 25% but not more than 50% (credited) of the nozzles shall be examined by the end of the first inspection period, and the remainder by the end of the inspection interval.
(3) Inspections may be partially deferred under the following conditions: If examinations are conducted from inside the component and the nozzle weld is examined by straight beam ultrasonic method from the nozzle bore, the remaining examinations required to be conducted from the shell inside diameter may be performed at or near the end of each inspection interval.
(4) The examination volumes shall apply to the applicable Figure shown in Figs. IWB-2500-7(a) through (d).

TABLE IWC-2500-1
EXAMINATION CATEGORIES

EXAMINATION CATEGORY C-A, PRESSURE RETAINING WELDS IN PRESSURE VESSELS						
Item No.	Parts Examined	Examination Requirements/ Fig. No.	Examination Method	Acceptance Standard	Extent of Examination[3]	Frequency of Examination[4]
C1.10	Shell Circumferential Welds	IWC-2500-1	Volumetric	IWC-3510	Welds[1] at gross structural discontinuity[2] only	Each inspection interval
C1.20	Head Circumferential Welds	IWC-2500-1	Volumetric	IWC-3510	Head-to-shell weld[1]	Each inspection interval
C1.30	Tubesheet-to-Shell Weld	IWC-2500-2	Volumetric	IWC-3510	Tubesheet-to-shell weld[1]	Each inspection interval

NOTES:
(1) Includes essentially 100% of the weld length.
(2) Gross structural discontinuity is defined in NB-3213.2. Examples are junctions between shells of different thicknesses, cylindrical shell-to-conical shell junctions, shell (or head)-to-flange welds, and head-to-shell welds.
(3) In the case of multiple vessels of similar design, size, and service (such as steam generators, heat exchangers), the required examinations may be limited to one vessel or distributed among the vessels.
(4) The vessel areas selected for the initial examination shall be reexamined over the service lifetime of the component.