FENOC
FirstEnergy Nuclear Operating Company

Perry Nuclear Power Plant
10 Center Road
Perry, Ohio 44081

John K. Wood
Vice President, Nuclear

440-280-5224
Fax: 440-280-8029

June 5, 2000
PY-CEI/NRR-2465L

United States Nuclear Regulatory Commission
Document Control Desk
Washington, DC 20555

Perry Nuclear Power Plant
Docket No. 50-440
License Amendment Request Regarding A Modification To The
Reactor Core Isolation Cooling System Initiation Logic

Ladies and Gentlemen:

Pursuant to 10 CFR 50.59 and 10 CFR 50.90, Nuclear Regulatory Commission review and approval of a license amendment involving a modification that changes the Perry Nuclear Power Plant (PNPP) as described in the Updated Safety Analysis Report (USAR) is requested. This license amendment proposes a circuit modification to the Reactor Core Isolation Cooling (RCIC) system initiation logic. The proposed circuit modification will include a time delay to the Main Turbine and Feedwater Pump Turbine trip signal associated with a RCIC system automatic initiation. The addition of this time delay will prevent potential Main Turbine and Feedwater Pump Turbine trips that result in unnecessary reactor scrams from inadvertent RCIC initiations.

A license amendment is being submitted for NRC review and approval based upon a completed 10 CFR 50.59 Safety Evaluation, which determined that the proposed modification will add a new failure mode to the existing RCIC initiation turbine trip logic and potentially adds a very remote new failure effect. Review and approval of this license amendment is requested to support installation of the proposed modification during the next scheduled refuel outage.

Attachment 1 provides a Summary, a Description of the Proposed Modification Change, a Safety Analysis, and an Environmental Consideration. Attachment 2 provides the Significant Hazards Consideration. Attachment 3 provides the annotated USAR pages reflecting the proposed change.

If you have questions or require additional information, please contact Mr. Gregory A. Dunn, Manager - Regulatory Affairs, at (440) 280-5305.

Very truly yours,

John K. Wood

Attachments

cc: NRC Project Manager
NRC Resident Inspector
NRC Region III
State of Ohio

A001

I, John K. Wood, hereby affirm that (1) I am Vice President - Perry, of the FirstEnergy Nuclear Operating Company, (2) I am duly authorized to execute and file this certification as the duly authorized agent for The Cleveland Electric Illuminating Company, Toledo Edison Company, Ohio Edison Company, and Pennsylvania Power Company, and (3) the statements set forth herein are true and correct to the best of my knowledge, information and belief.

John K. Wood

Subscribed to and affirmed before me, the 5th day of June, 2000

Jane E Mott

JANE E. MOTT
Notary Public, State of Ohio
My Commission Expires Feb. 20, 2005
(Recorded in Lake County)

SUMMARY

In accordance with 10 CFR 50.59 and 10 CFR 50.90, Nuclear Regulatory Commission (NRC) review and approval is requested of a proposed modification to the Perry Nuclear Power Plant (PNPP), Unit 1, as described in the Updated Safety Analysis Report (USAR). The change incorporates a circuit modification to the Reactor Core Isolation Cooling (RCIC) system initiation logic. The proposed circuit modification will include a time delay to the Main Turbine and Feedwater Pump Turbine trip signal associated with a RCIC system automatic initiation. The automatic turbine trip addresses commercial protection for the turbines and is unnecessary upon an early initiation of the RCIC system. Therefore, the addition of this time delay will prevent unnecessary reactor scrams from inadvertent RCIC initiations.

This modification is being submitted for NRC review and approval based upon a completed 10 CFR 50.59 Safety Evaluation, which determined that the proposed modification will add a new failure mode to the existing RCIC initiation turbine trip logic and potentially adds a very remote new failure effect. With the existing RCIC initiation logic, an inadvertent initiation of the RCIC system ultimately results in a Main Turbine and Feedwater Pump Turbine trip and a plant scram, for a reduction in plant availability. The proposed modification to the trip logic in the form of a time delay has been evaluated as one approach to significantly reduce the potential for unnecessary plant shut downs due to inadvertent RCIC initiations. The use of a time delay to inhibit tripping the Main and Feedwater Pump Turbines effectively reduces the potential for plant scrams, without reducing the reliability of the RCIC system or the Main and Feedwater Pump Turbines. Therefore, implementation of the proposed modification will introduce fewer challenges to the plant by reducing potential inadvertent initiating events. Review and approval of this license amendment is requested to support installation of the proposed modification during the next scheduled refuel outage.

DESCRIPTION OF THE PROPOSED MODIFICATION

BACKGROUND

The RCIC system is not an Engineered Safety System or an Emergency Core Cooling System. However, the RCIC system is a safety-related system that consists of a turbine, pump, valves, accessories, and instrumentation designed to assure that sufficient reactor water inventory is maintained in the Reactor Pressure Vessel (RPV) for adequate core cooling. In the event the RPV is isolated, and the Feedwater supply is unavailable, the water level will drop due to continued steam generation. Once the RPV water level decreases to a specific level (Level 2), the RCIC system will automatically initiate. To provide protection of the Feedwater Pump Turbines and the Main Turbine, the RCIC system initiation logic provides for an immediate trip of these components.

In order to reduce unnecessary challenges to the plant and improve plant availability, modifications to the trip logic in the form of a time delay have been evaluated as one approach to prevent RCIC inadvertant initiation events from causing a plant shutdown. At the PNPP, RCIC logic failures have caused 3 inadvertant initiations resulting in plant shutdowns in the past.

Since the RCIC system sprays water into the RPV head, the purpose of this trip function is to avoid subjecting the Feedwater Pump Turbines and the Main Turbine to steam containing high levels of entrained moisture. If the RCIC system inadvertently initiates during normal plant power operation, the steam leaving the RPV will contain moisture levels that may result in Main and Feedwater Pump Turbine degradation if allowed to continue for long periods.

The proposed modification provides for a 4-½ minute time delay setting for tripping the Feedwater Pump Turbines and the Main Turbine in the event of a RCIC initiation. The proposed modification involves a non-ESF, non-ECCS system and is considered to have low safety significance. With this time delay, the potential moisture levels that may result are expected to have no detrimental effect on the Main and Feedwater Pump Turbines, their associated piping, components and drains.

The installation of the proposed time delay provides time for plant operators to assess plant conditions and secure the RCIC system if not required for safe plant operation. Essentially, this modification will eliminate unnecessary plant transients due to inadvertent RCIC system initiation events.

PROPOSED MODIFICATION

The proposed modification is to be installed at the next available PNPP outage and involves both safety-related and non-safety-related circuits. The RCIC initiation logic is safety-related. The safety-related RCIC initiation logic when activated sends a Main and Feedwater Pump Turbine trip signal through an optical isolator. This optical isolator is utilized to separate the safety-related circuits from the non-safety-related circuits. The Feedwater Pump Turbine trip circuit, main turbine trip circuit, and the annunciation circuit (RCIC initiated and turbine trip) are all non-safety-related.

The following describes the existing plant configuration. The existing Feedwater Pump Turbine trip, Main Turbine trip, and associated annunciation circuits are activated by a single non-safety related relay, E51AK94 (K94) (see Figure 1 on Page 9). This relay is a normally de-energized relay with no time delay. When RCIC receives an automatic initiation signal, relay K94 energizes, which trips both the Feedwater Pump Turbines and Main Turbine, and initiates the RCIC system startup annunciator and the Main and Feedwater Pump Turbine trip annunciator.

The following is a short description of the proposed modification. When reactor power is greater than 70%, if the RCIC system initiates operation, the system initiation relay starts a time delay pickup relay, Q7220, for the turbine trip circuits. If this time delay pickup relay times out, signals are sent to trip the turbines. If the operator terminates RCIC system operation by the closure of the RCIC Turbine Trip & Throttle Valve or resetting the RCIC initiation signal before the time delay pickup relay times out, the timing sequence is terminated, thus preventing the trip of the Main and Feedwater Pump Turbines. The proposed modification is accomplished by installing a non-safety related time delay relay (Q7220) in parallel to the existing K94 relay (see Figure 2 on Page 10). This additional time delay relay will allow for up to a 4-½ minute delay for tripping the Feedwater Pump and Main Turbines. Inadvertent RCIC operation is expected to be no more than 5 minutes before corrective action would be taken to trip the RCIC system.

Therefore, the RCIC system vendor and steam supply design vendor, General Electric (GE), was contracted to analyze a time delay function of up to five minutes. The proposed time delay relay will be set at 4-½ minutes to allow for instrument inaccuracies and drift.

An additional safeguard or backup method was determined to be needed to prevent the time delay relay installed by this modification from tripping the Feedwater Pumps and Main Turbine once the RCIC system is secured. This modification utilizes a contact from relay E51K19 (K19). Relay K19 is normally energized when valve 1E51F0510 (Turbine Trip & Throttle valve) is open (normal position with RCIC in standby readiness). Relay K19 de-energizes when this valve (1E51F0510) closes. The spare contact utilized from relay K19 will de-energize the new time delay relay when valve 1E51F0510 is closed. This will provide a positive backup method to prevent a plant shutdown on a failure of the RCIC system automatic initiation logic.

Below 70% reactor power, the Feedwater Pump Turbines and Main Turbine would be tripped immediately on indication of inadvertent RCIC system initiation. This removes any concerns regarding the capability of the associated steam line drains to remove RCIC injection flow at plant operating conditions below 70% reactor power. Therefore, the time delay for tripping the Feedwater Pump Turbines and Main Turbine on indication of inadvertent RCIC system initiation is only recommended for reactor power levels of 70% or greater. To accommodate this, the proposed modification installs a non-safety related keylock selector switch. This switch is wired into the circuit logic (utilizing K94 contacts) to allow plant operators to enable/disable the time delay associated with the Main and Feedwater Pump Turbine trip signals. Plant operating procedures will be changed to provide the necessary administrative control for the operation of the new keylock selector switch. Plant operators will be trained to the revised operating procedures.

As referenced earlier, for more detail on the existing and proposed plant configuration, please see Figures 1 and 2 of this attachment.

SAFETY ANALYSIS

The number of inadvertent RCIC initiations during power operation was originally estimated by GE to be from 1 to 5 during the life of the plant (nominally 40 years), with a best estimate of 2 times, or once per 20 years. With the existing Main and Feedwater Pump Turbine trip configuration, an inadvertent initiation of the RCIC system ultimately results in a turbine trip and a plant scram, for a reduction in plant availability. Limited operation of the Main and Feedwater Pump Turbines at elevated moisture levels have been evaluated on a case by case basis.

The duration of an inadvertent RCIC operation during normal reactor power operation is estimated to be no more than 5 minutes before corrective action would be taken by the operators to trip the RCIC system. The proposed use of a timer would inhibit tripping the Main and Feedwater Pump Turbines during this time period.

The inadvertent operation of the RCIC system will not cause a reactor scram due to RPV level shifts or changes, since the reactor feed pump system will automatically adjust the Feedwater flow to maintain the appropriate reactor level with the addition of the RCIC injection flow.

Relative to automatic RCIC initiation, the 4-½ minute time delay will only be activated when reactor power is 70% or greater. This will ensure that sufficient steam flow is present to ensure all moisture from the RCIC spray is entrained within the steam and no water is built up at low points in the steam lines. A control switch mounted on Control Room Panel 1H13P629 will be utilized to enable/disable the 4-½ minute time delay. This control switch and the associated wiring are non-safety related.

In the event of an inadvertent RCIC initiation, a 4-½ minute time delay relay will begin to time out. When Control Room personnel determine that the RCIC system is not required, the RCIC turbine/pump will be secured. The 4-½ minute time delay relay will then be automatically deactivated. Two methods are built into the circuit logic to ensure that the 4-½ minute time delay relay will be reset once the RCIC system is secured. The two methods are:

1. The 4-½ minute time delay relay will be reset once the RCIC initiation logic is reset.

2. The 4-½ minute time delay relay will also be reset if the RCIC Trip Throttle Valve is tripped.

Off Normal Instruction (ONI) E12-1, "Inadvertent Initiation of ECCS/RCIC (Unit 1)," currently requires tripping the RCIC Trip Throttle Valve for a RCIC pump shutdown. A note will be added to this procedure to ensure that plant personnel have determined and corrected the cause of the inadvertent RCIC initiation prior to resetting/opening the RCIC Trip Throttle Valve. This will ensure that the 4-½ minute time delay relay does not reactivate due to faulty circuitry. Inadvertent RCIC initiations have been due to failed RCIC circuit components, which would prevent resetting the RCIC initiation logic. Closing the RCIC Trip Throttle Valve per ONI E12-1 provides a positive and backup control method to ensure the Main and Feedwater Pump Turbines are not tripped after RCIC is secured.

As a result of this modification, the RCIC system may operate for up to 4-½ minutes while the reactor is at power (70% or greater). The PNPP USAR, Section 15A.6.3.3.C, states that the High Pressure Core Spray (HPCS) pump inadvertent start and injection effects on moderator inventory and temperature decrease bounds that of the Low Pressure Core Spray, Residual Heat Removal, and RCIC systems. Also, a review of the accident analysis events of the PNPP USAR, in particular Chapter 15, Section 15.2.3, Turbine Trip, indicates that there is no reliance placed on the main turbine RCIC initiation trip circuit in any of the analyses. Therefore, the analysis of RCIC inadvertent injection for up to 5 minutes is bounded by the current accident analysis and this modification does not affect the normal operation of the RCIC system or any other system.

The changes made by this modification only affect the tripping of the Main Turbine and Feedwater Pump Turbines when an inadvertent automatic RCIC initiation logic signal occurs.

FAILURE MODES EFFECTS ANALYSIS

The Turbine Protection System consists of three categories of protection that vary in degrees of importance. According to the vendor, GE, statistics and failure probability calculations played an important role in deciding what the degree of importance of a given protection should be. The three categories of protection are:

- Vital Protections - *The failure of which could result in a major catastrophe endangering personnel and equipment.*
- Important Protections - *The failure of which would result in increased maintenance but would not endanger personnel.*
- Operational Protections - *The failure of which could cause minor turbine damage.*

The RCIC initiation trip circuit is an "operational protection," which is considered by the Turbine vendor to be within the least important turbine protection category.

The key concern relative to inadvertent RCIC system operation is RCIC head spray water carryover and the expected increase in moisture in the process steam to the Main and Feedwater Pump Turbines. The stated moisture content may cause some internal erosion to, and thermal performance degradation of the turbine steam path components, but has been determined to have no detrimental effect on the reliability of the Main and Feedwater Pump Turbines or result in increased Main and Feedwater Pump Turbine vibration. Any increase in erosion will be detectable due to the loss of Main and Feedwater Pump Turbine efficiency before any Turbine failures would occur. Therefore, it is fully expected that a detectable change in Main and Feedwater Pump Turbine performance would occur well before degradation of the Turbines. This detection would be in the form of Main and Feedwater Pump Turbine alarms, vibration, etc. that are available to the operator.

Any increase in erosion associated with an inadvertent RCIC system initiation in the main steam piping, nozzles or fittings is due to the very limited amount of time for simultaneous operation of the RCIC System. However, evaluation results indicate that the total expected erosion from this event over the 40-year life of the plant would be less than 9E-04 mils (0.0000009 inches).

Even if the moisture content were to increase to 12% at lower power operation, or if the temperature factor were to change by an order of magnitude, the total amount of erosion is not significant for this event. Therefore, the reactor nozzles, steam lines, and other main steam line equipment and interfacing system components are capable of accommodating the increased moisture carry over.

The PNPP USAR, Section 10.2, "External Turbine Missile Generation Probability," states that calculations for determining missile probability indicate that the dominant failure mode of the Main Turbine would be brittle fracture emanating from a stress corrosion crack, which occurs at the axial keyway in the bores of shrunk-on wheels.

Erosion due to moisture content of the steam was not determined to be the dominant failure mode that could cause turbine missile generation. The Main Turbine casing and surrounding structures will not be changed by the proposed modification. The location of equipment important to safety as it relates to the turbine missiles will not be changed. Therefore, the increased moisture ingestion at the proposed frequency and duration levels does not represent a safety concern, result in a reduction in turbine reliability, or increase the probability of missile generation.

Above approximately 70% reactor power, the steam velocities in the main steam lines are high enough to carry or entrain any condensate that is formed (due to system heat losses and pressure drops due to friction losses in the piping) along with the steam. The high velocities will break up any condensate film that might form on the pipe walls and carry it along in the form of small particles, thus preventing accumulation of any large pockets of condensate or the formation of water slugs. Also, at discontinuities such as valves, elbows and steam headers, the steam velocity is high enough to assure that there will be no significant collection of water. Since condensate will not collect in the piping at these velocities, it is not critical that the low point drains for each steam line have the capability to remove the additional condensate originating from RCIC operation.

The loading increase on the main steam piping due to the additional moisture is negligible. The reaction loads on the main steam piping and supports is bounded by the loads generated by fast closure of the Turbine Stop Valve during a Main Turbine trip event.

The estimated number of inadvertent RCIC events (5) is based on the nominal expected occurrences for this event over the life span of the reactor. The duration for each occurrence (maximum of 5 minutes) was based on the maximum time needed for the operator to respond to the event. The number and duration is not related to any limitations on Main and Feedwater Pump Turbine operation at the higher moisture levels. Extended use of the Main and Feedwater Pump Turbines beyond the specified number of events or time duration could be justified by means of operational assessments based on the duration of the individual events, Main and Feedwater Pump Turbine maintenance history and/or inspection results.

The addition of the timer to inhibit tripping the Main and Feedwater Pump Turbines on RCIC system initiation will have no effect on RCIC system reliability. During an automatic RCIC initiation on reactor Level 2, the reactor will have already been scrammed. This is because on the preceding occurrence of Level 3, control room operators will have ensured that the Main and Feedwater Pump Turbines are tripped prior to RCIC system initiation. The RCIC turbine employs an impulse wheel design that is not adversely impacted by the increased moisture levels and can withstand significant water slug loads without damage.

The capability to withstand water slugs was demonstrated during deliberate water injection tests, which were required by the NRC for the first RCIC systems. Operator action to enable the timer is not associated with any accident mitigation activities. If the operators do not enable the time delay, associated with this modification, the RCIC system will function as currently designed and is bounded by the existing trip circuit logic.

The RCIC initiation trip circuit is an "operational protection" considered by the vendor, GE, to be the least important turbine protections that guards against conditions that could cause minor turbine damage or accelerated wear or erosion and are not a part of the turbine overspeed system.

With the present design configuration, a failure of any one of the 4 following listed items would prevent a turbine trip during a RCIC initiation event at any reactor plant power level.

1. Non-safety relay K94 (energize to trip the turbines)
2. Non-safety side of optical isolator
3. Supporting non-safety power supply
4. Associated circuit fusing or wiring

The proposed modification will add a control switch to enable a 4-½ minute time delay prior to tripping the turbines when RCIC inadvertently initiates. An operator action will be required to disable the time delay when reactor power is below 70%. Because failure to perform this operator action, at reactor power below 70%, could prevent the turbines from tripping when desired, the proposed modification adds a new failure mode to the existing RCIC initiation turbine trip logic. However, this additional failure mode has the same effect as the four items listed above. This new failure mode is not considered quantifiable and is very remote.

The new failure mode would only cause a problem if an additional component failure causes the RCIC system to inadvertently initiate with reactor power at less than 70%. The failure effect resulting from this failure mode is the introduction of RCIC head spray water carryover and the expected increase in moisture in the process steam to the Main and Feedwater Pump Turbines. Plant operation below 70% is infrequent and the probability of a component failure that will inadvertently initiate the RCIC system is very low. It is considered very unlikely that these three items (plant operation below 70%, operator action missed and the RCIC system inadvertently initiating) will occur simultaneously.

This modification does not require a revision to PNPP's Probabilistic Risk Assessment (PRA) model. The change does not represent an increase in Core Damage Frequency (CDF) but represents a potential for reducing the number of initiating events related to RCIC inadvertent actuation. The proposed modification reduces the potential for unplanned scrams due to inadvertent RCIC initiation. Therefore, this modification presents a positive probabilistic measure by reducing potential initiating events related to inadvertent system actuation.

Inspection Notice (IEN) 97-78, "Crediting of Operator Actions in Place of Automatic Actions and Modifications of Operator Actions, Including Response Times" issued by the NRC on October 23, 1997, states that it is not appropriate to take operator action in place of an automatic action for protection of safety limits. The action of enabling/disabling the 4-½ minute time delay does not affect any safety limits. Additionally, ANSI-58.8, "Time Response Design Criteria for Safety Related Operator Actions," states that nuclear safety related operator actions or sequences of actions may be performed by an operator only where a single operator error of one manipulation does not result in exceeding the design requirement for design basis event.

The incorrect operation of the new control switch will not result in exceeding the design requirements for any design basis event at the PNPP since the single operator action would have to be in conjunction with an inadvertent RCIC initiation (equipment failure) while below 70% power to potentially exceed any design requirements.

IMPACT TO POWER UPRATE

The engineering assessment completed for the proposed modification was based on the conservative approach that the minimum steam flow velocity required for maintaining entrainment of the moisture in the steam, and for preventing the collection of condensate at the low points in the lines, to be approximately 100 feet per second. This flow velocity is achieved at approximately 70% reactor power. Power uprate for the PNPP will result in an increase in the steam flow rates. With a 5% power uprate and the proposed modification, the current drain design is adequate. Therefore, it is acceptable to enable the 4-½ minute time delay at 70% reactor power for both the current plant configuration and the Uprated Power configuration.

COMMITMENTS

The following are the regulatory commitments made in this letter. Any other actions discussed in this document are not regulatory commitments and represent intended or planned actions that are described for the NRC's information. Please notify the Manager, Regulatory Affairs at the PNPP of any questions regarding this document.

Plant operating procedures will be changed to provide the necessary administrative control for the operation of the new keylock selector switch. Plant operators will be trained to the revised operating procedures.

ENVIRONMENTAL CONSIDERATIONS

The proposed license amendment request was evaluated against the criteria of 10 CFR 51.22 for environmental considerations. The proposed change does not significantly increase individual or cumulative occupational radiation exposures, does not significantly change the types or significantly increase the amounts of effluents that may be released offsite, and as discussed in Attachment 2, does not involve a significant hazards consideration. Based on the foregoing, it has been concluded that the proposed license amendment request meets the criteria given in 10 CFR 51.22 (c) (9) for a categorical exclusion from the requirement for an Environmental Impact Statement.

FIGURE 1

RCIC to Main and Feedwater Pump Turbine Trip Circuit

(Before The Proposed Modification).

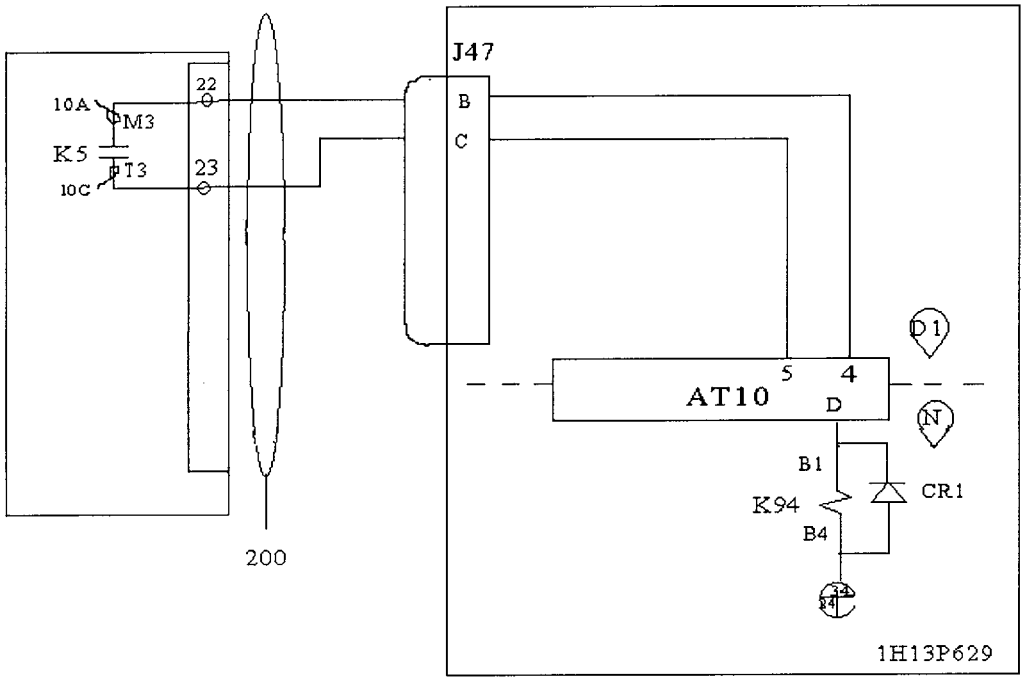

Explanation of logic: *When RCIC is automatically initiated relay K5 is energized. Relay contacts K5 M3/T3 close. This energizes relay K94 through optical isolator AT10. Relay K94 contacts are wired to trip both the Main and Feedwater Pump Turbines. Relay K94 also provides the RCIC Initiation annunicator and turbine trip annunicator.*

FIGURE 2

RCIC to Main and Feedwater Pump Turbine Trip Circuit

(After The Proposed Modification)

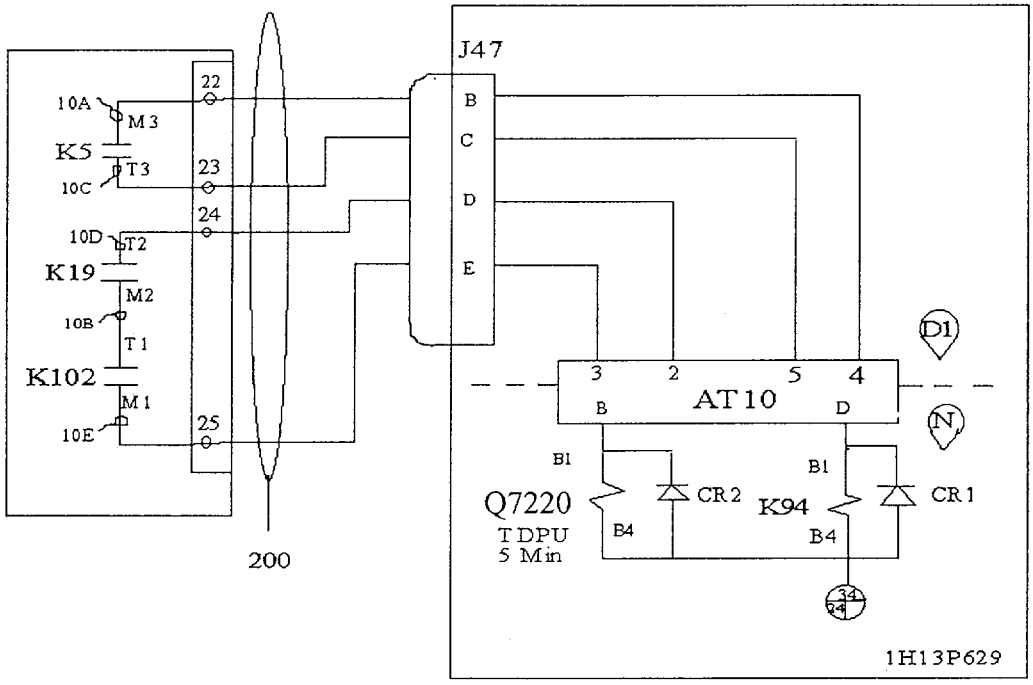

Explanation of logic: *When RCIC is automatically initiated relays K5 and K102 are energized. Relay contacts K5 M3/T3 close. This energizes relay K94 through optical isolator AT10. Relay K94 contacts are wired to provide the RCIC initiation annunicator. When relay K102 energizes, relay contacts K102 M1/T1 will close. Note that relay K19 contacts M2/T2 will be closed when the RCIC system is in standby due to valve 1E51F0510 "RCIC Trip Throttle Valve" being open. Once relay K102 is energized relay 1E51Q7220 will start to timeout and will energize after 4-½ minutes. Relay 1E51Q7220 contacts are wired (when energized) to trip the Main and Feedwater Pump Turbines and to provide a turbine trip annunicator. Plant operators will shutdown the RCIC system once it is determined that the RCIC system is not needed (spurious initiation). The RCIC System Operating Instruction (SOI) directs the operator to close valve 1E51F0510 to trip the RCIC turbine. This will de-energize relay K19 and stop the 4-½ minute time delay relay 1E51Q7220 from energizing. An additional control switch (Not shown) will disable the 4-½ minute time delay feature by utilizing relay K94 contacts to trip the Main and Feedwater Pump Turbines when RCIC is initiated. The 4-½ minute time delay will be disabled when reactor power is less than 70%.*

SIGNIFICANT HAZARDS CONSIDERATIONS

The standards used to arrive at a determination that a request for amendment involves no significant hazards considerations are included in the Commission's Regulations, 10 CFR 50.92, which state that the operation of the facility in accordance with the proposed amendment would not: (1) involve a significant increase in the probability or consequences of an accident previously evaluated; or (2) create the possibility of a new or different kind of accident from any previously evaluated; or (3) involve a significant reduction in the margin of safety.

The proposed amendment has been reviewed with respect to these three factors and it has been determined that the proposed change does not involve a significant hazard because:

1. The proposed change does not involve a significant increase in the probability or consequences of an accident previously evaluated.

   The Reactor Core Isolation Cooling (RCIC) initiation turbine trip circuit performs an operational protection of the main turbine for commercial and reliability purposes. The proposed modification slightly alters the methodology by which the turbine protective features are performed but they have no influence on any of the accidents previously evaluated. The associated circuits do not interfere with higher priority protection systems.

   Installation of circuits associated with the proposed modification cannot initiate an accident, nor are they used to mitigate the consequences of any previously defined accident. Their function is to provide turbine protection that is separate and distinct from the turbine overspeed protection system. The circuits modified by this modification will still result in actions taken (auto or manual) that meet the bases for the present design. Also, this modification does not alter or adversely affect the turbine overspeed function in any manner.

   The proposed modification reduces the probability of occurrence of spurious turbine trips due to spurious RCIC initiation. Therefore, with the implementation of this modification, the boundaries of the accident analysis will be less challenged and result in fewer false scrams.

   The proposed modification provides assurance for compliance with the current licensing basis regarding dose limits of General Design Criteria (GDC) 19 of Appendix A to 10 CFR 50 and 10 CFR 100. The proposed modification ensures originally stated design criteria are met and therefore does not affect the precursors for accidents or transients analyzed in Chapter 15 of the Perry Nuclear Power Plant (PNPP) Updated Safety Analysis Report (USAR). With the proposed modification, the radiological consequences are the same as previously stated in the USAR. Therefore, the implementation of the proposed modification does not involve a significant increase in the probability or consequences of an accident previously evaluated.

2. The proposed change does not create the possibility of a new or different kind of accident from any accident previously evaluated.

   The USAR addresses accident analysis of the reactor based on events such as turbine trips, including spurious trips and turbine missiles. The present RCIC initiation turbine trip circuit is a potential contributor to spurious turbine trips. The addition of the time delay relay reduces this potential. A time delay relay failure that fails to trip the turbine would have the same effect on the turbine as the failure of the present trip circuit that has no time delay relay. The consequence of the failure of this circuit to protect the turbine remains unchanged with the addition of a time delay relay and is bounded by the existing accident analysis. The accident analysis for missile protection of those systems, structures, components required for the safe shutdown of the plant remain unchanged.

   The probability of external missile generation has not changed with implementation of the proposed modification. The Main Turbine casing and surrounding structures will not be changed by the proposed modification. The location of equipment important to safety as it relates to the turbine missiles will not be changed. Therefore the missile strike probability will not be increased by the 4 1/2-minute time delay.

   The proposed modification provides assurance for compliance with the current licensing basis regarding dose limits of GDC 19 of Appendix A to 10 CFR 50 and 10 CFR 100. The proposed modification does not change the assumptions used in any accident analysis and no new or different kind of accident is created. The proposed modification ensures originally stated design criteria are met and therefore does not affect the precursors for accidents or transients analyzed in Chapter 15 of the PNPP USAR. Therefore, the implementation of the proposed modification does not create the possibility of a new or different kind of accident from any accident previously evaluated.

3. The proposed change does not involve a significant reduction in a margin of safety.

   The margin of safety by which this modification is evaluated against is the design/criteria of the turbine overspeed protective system relative to the PNPP USAR, SER, GDC4, and Reg. Guide 1.115. The change in response time of the main turbine RCIC initiation trip circuit does not affect the margin of safety as reflected in these documents. There is no safety margin criteria associated with this circuit, as defined in the USAR or the bases for any Technical Specifications.

   Although there is no margin of safety associated with the turbine, the regulatory requirement for acceptance of the turbine for use at PNPP is based upon a calculated value of probability of external turbine missile interaction with safety related equipment.

The barriers (Turbine casing and surrounding structures) and barrier interaction as previously analyzed will not be changed by this modification. The location of safety related equipment as it relates to the turbine missiles will not be changed. The probability of external missile generation has not changed with implementation of the proposed modification. Therefore, there is no reduction in the margin of safety by the proposed modification.

PROPOSED CHANGES

TO

UPDATED SAFETY ANALYSIS REPORT

This Page Information Only

The sequence of events and response times following a turbine trip are given in Section 15.2.3, Figures 15.2-2 through 15.2-5, and Tables 15.2-2 through 15.2-5.

10.2.2.4.1 Turbine Trip Signals Due to Mechanical Faults

The turbine is shut down due to the following mechanical fault signals:

a. Loss of vacuum trip.

b. Excessive thrust bearing wear.

c. Prolonged loss of generator stator coolant at loads in excess of a preset value.

d. External trip signals, including remote-manual trip on the control panel.

e. Loss of hydraulic fluid supply pressure (loss of emergency trip system fluid pressure automatically closes the turbine valves and then energizes the master trip relay to prevent a false restart).

f. Low bearing oil pressure.

g. Loss of both speed signals when turbine is not in standby control.

h. High exhaust hood temperature.

i. High shaft vibration.

j. Loss of 125-volt dc electrohydraulic control power supply when turbine is operating at less than 75 percent rated speed.

k. Loss of 24-volt dc electrohydraulic control power supply.

l. High level in moisture separators.

m. High reactor water level.

n. Low shaft pump discharge pressure when turbine is operating at greater than 75 percent of rated speed.

o. Operation of the manual mechanical trip at the front standard.

p. Low bearing oil pressure to the trip piston.

Proposed USAR Change

q. RCIC initiation signal time delay ≥ 70% Reactor Power.

10.2.2.4.2 Turbine Trip Signals Due to Generator Electrical Faults

Generator electrical fault signals that trip the turbine are as follows:

a. 345 kV breaker failure.

b. Main transformer differential.

c. Main transformer sudden pressure with current supervision.

d. Main transformer 345 kV neutral overcurrent.

e. Unit 345 kV bus differential.

f. Unit auxiliary transformer neutral overcurrent X.

PROPOSED USAR CHANGE

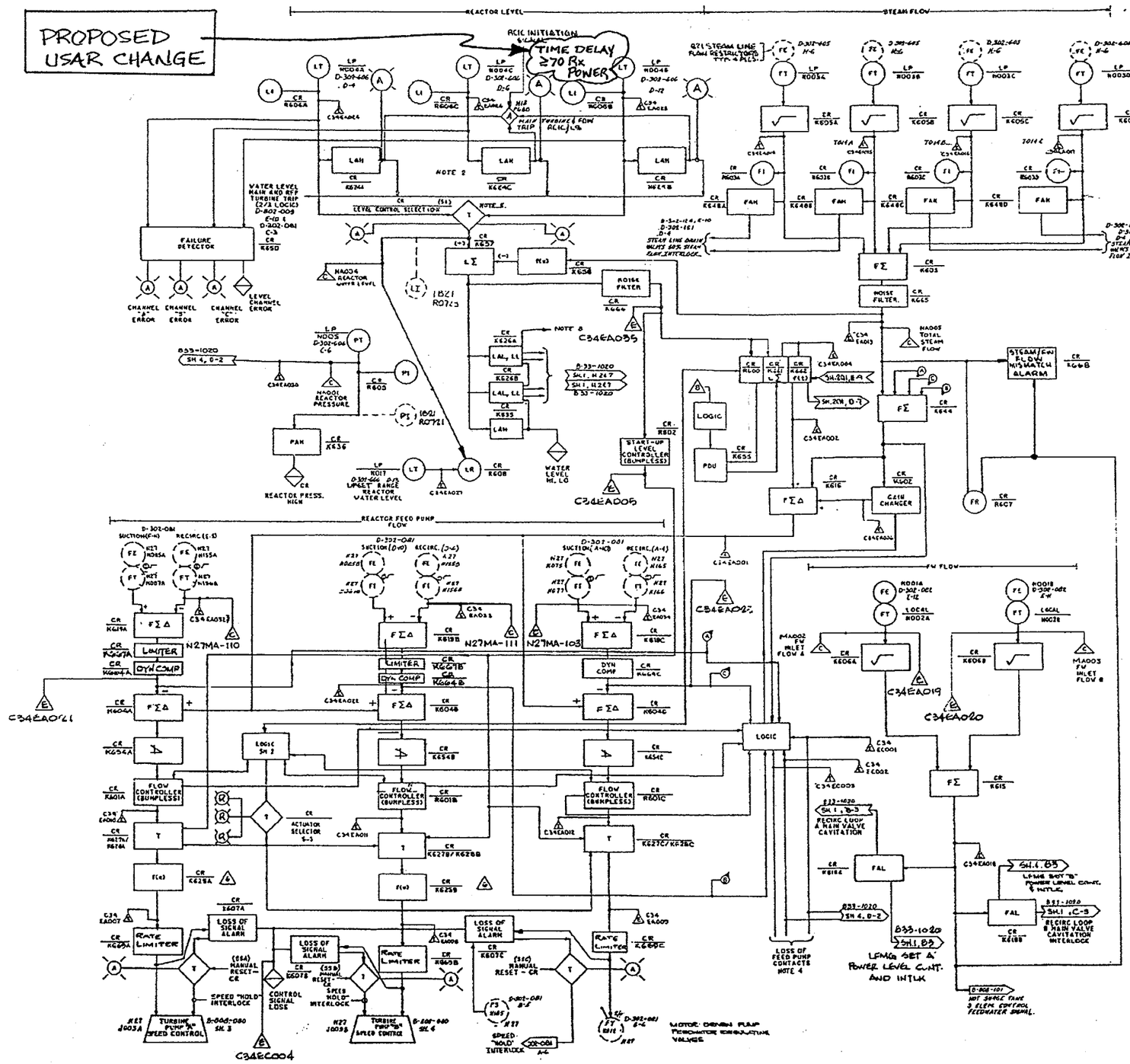

NOTES:

1. ALL EQUIPMENT AND INSTRUMENTS ARE PROVIDED BY SYSTEM NO. C32, UNLESS OTHERWISE NOTED.
2. DEVICES 6624A, B AND C TRIP CONTACTS TO BE WIRED ON 2/3 LOGIC SO THAT ANY 2 DEVICES MUST TRIP TO INITIATE MAIN AND AUXILIARY TURBINE STEAM STOP VALVE TRIP. POWER SOURCES TO THE LEVEL TRIP CHANNELS MUST BE FROM INDEPENDENT SOURCES.
3. THE POWER SOURCE FOR THE FEEDWATER INSTRUMENTATION AND CONTROL SYSTEM SHALL HAVE AT LEAST THE SAME DEGREE OF RELIABILITY AS THE POWER SOURCE FOR THE REACTOR FEED/BOOSTER/CONDENSATE PUMPS.
4. CONTACTS FROM EACH START AND DISCHARGE VALVE INDICATE WHEN PUMP IS OPERATING AND CAPABLE OF DELIVERING WATER. THE LOGIC TO INDICATE THE TURBP IS OPERATING UTILIZES THE TRIP SYSTEM OIL PRESSURE SWITCH.
   THE L.P. STOP VALVE CLOSES PARTIALLY DURING VALVE TESTING; WHEREAS THE H.P. STOP VALVE CLOSES COMPLETELY WHEN TESTED.
5. SWITCHES SHALL BE SNAP ACTION SWITCHES, CONTACT OPERATION BEING INDEPENDENT OF SPEED OF CONTROL ROOM OPERATOR ACTION TO AVOID CONTROL SYSTEM TRANSIENTS DURING SWITCHING.
6. FUNCTION GENERATORS SPECIALLY CHARACTERIZED BASED ON TURBINE OR PUMP UNIT OR SIGNAL VS FW FLOW 10/40 CHARACTERISTICS TO BE SUBMITTED TO G.E. BY CUSTOMER/A.E. FOR G.E. DESIGN COMPLETION.
7. FOR LOCATION AND IDENTIFICATION OF INSTRUMENTS, SEE INSTRUMENT DATA SHEET C34-3056.
8. INITIATING SIGNAL FOR SET POINT SET DOWN SHALL BE LEVEL 3 (K626A) UNTIL SCRAM SIGNAL ISOLATION DEVICE BECOMES AVAILABLE.

13. THIS SYSTEM DIAGRAM IS A PHOTOGRAPHIC REPRODUCTION OF G.E. DRAWING 8D156567, SHEETS 1 AND 2. SPECIFIC REVISION IS SHOWN BENEATH CAE TITLE BLOCK.
14. REFER TO INSTRUMENT INDEX FOR INSTRUMENT DATA AND PANEL IDENTIFICATION NUMBERS.
15. SELECTOR SWITCHES, INDICATING LIGHTS, AND ANNUNCIATOR POINTS SHOWN ON THESE DIAGRAMS, ARE LOCATED ON 8H13-P668.
16. △ SYMBOL = EMERGENCY RESPONSE INFORMATION SYSTEM (ERIS).

REFERENCES:-

C34-4030	FEEDWATER CONTROL SYSTEM DESIGN SPECIFICATION
D-302-605	NUCLEAR BOILER SYSTEM B21
D-302-606	NUCLEAR BOILER SYSTEM B21
D-302-607	NUCLEAR BOILER SYSTEM B21
B33-1020	REACTOR RECIRCULATION SYSTEM F00
A62-4100	AUXILIARY AND STANDBY AC POWER
D-302-081	FEEDWATER SYSTEM N27
D-302-082	FEEDWATER SYSTEM N27
D-802-900	REACTOR - TURBINE - GENERATOR TRIP DIAGRAM
D-302-121	MAIN, REHEAT, EXTRACTION AND MISCELLANEOUS DRAINS N22
D-302-812	REHEAT STEAM SYSTEM N11
D-808-080	FEEDWATER SYSTEM LOOP DIAGRAM
D-808-101	CONDENSATE SYSTEM LOOP DIAGRAM
A42-1030	LOGIC SYMBOLS
A42-1050	INSTRUMENT SYMBOLS
C34-3056	INSTRUMENT DATA SHEETS
C51-4030	COMPUTER I/O LIST
B-208-025	FEEDWATER CONTROL SYSTEM ELEMENTARY DIAGRAM (C34)
B-209-149	FEEDWATER SYSTEM ELEMENTARY DIAGRAM (N27)
D-302-124	MAIN, REHEAT, EXTRACTION AND MISCELLANEOUS DRAINS N22
A62-4530	TRANSIENT TEST INSTRUMENTATION REQUIREMENTS
C95-1050	ERIS ELEMENTRY DIAGRAM - -

NOTE:
THIS DRAWING REPLACES DRAWING D-808-081 SH 1.

(Rev. 10 10/99)

PERRY NUCLEAR POWER PLANT

Feedwater Control System
Instrumentation and
Electrical Diagram

Figure 7.7-6 (Sheet 1 of 2)
[Dwg. B-208-025 (A200)]