50-302

Florida Power
CORPORATION
Crystal River Unit 3
Docket No. 50-302
Operating License No. DPR-72

May 31, 2000
3F0500-14

Document Control Desk
U. S. Nuclear Regulatory Commission
Washington, DC 20555-0001

Subject: License Amendment Request No. #255, Revision 0
Emergency Feedwater Initiation and Control (EFIC) System Instrumentation

Reference: FPC to NRC letter, 3F0799-04, dated July 1, 1999, Licensee Event Report 99-003

Dear Sir:

Florida Power Corporation (FPC) hereby submits License Amendment Request (LAR) #255, Revision 0, to its Facility Operating License No. DPR-72 in accordance with 10 CFR 50.90. The changes to the Crystal River Unit 3 (CR-3) Improved Technical Specifications (ITS) proposed in LAR #255 clarify the actions to be taken with regard to the Emergency Feedwater Initiation and Control (EFIC) System in the event that one or more reactor coolant pump (RCP) status signals become inoperable.

This change is necessary because existing action requirements are not sufficient for all conditions involving inoperable RCP status signals. LAR #255 adds specific actions to be taken to restore the EFIC RCP status function in the event one or more reactor coolant pump power monitors (RCPPMs) or their associated circuitry become inoperable.

LAR #255 also proposes changes to ITS Table 3.3.11-1 to clarify the source of the loss of main feedwater pumps signals supplied to EFIC from the Reactor Protection System (RPS), and to clarify the arrangement of the RCP status signals to EFIC. These changes will ensure consistency between Table 3.3.11-1 and the information contained in Bases Section B 3.3.11.

CR-3 has reviewed the guidance provided in NRC Administrative Letter 98-10, "Dispositioning of Technical Specifications That Are Insufficient To Assure Plant Safety," and has determined that the requested ITS change is not required for continued operation of CR-3. However, the current EFIC System Instrumentation ITS requires CR-3 to reduce power to less than 10% rated thermal power in the unlikely event that multiple RCP status signals are determined to be inoperable. This power reduction is considered an unnecessary transient. Therefore, CR-3 is requesting NRC approval of LAR #255 by February 2001 in order to minimize the period of time that CR-3 would be susceptible to this transient if multiple RCP status signals become inoperable.

A001

This letter establishes no new regulatory commitments.

If you have any questions regarding this submittal, please contact Mr. Sidney C. Powell, Manager, Nuclear Licensing at (352) 563-4883.

Sincerely,

John J. Holden
Vice President and Site Director

JJH/rmb

xc: Regional Administrator, Region II
Senior Resident Inspector
NRR Project Manager
State of Florida, Department of Health and Rehabilitative Services

Attachments:

A. Description of Proposed Changes, Background, Reason for Request, and Evaluation of Request
B. No Significant Hazards Consideration Determination
C. Environmental Impact Evaluation
D. Proposed Revised Improved Technical Specifications and Bases Change Pages, Strikeout / Shadowed Format
E. Proposed Revised Improved Technical Specifications and Bases Change Pages, Revision Bar Format

STATE OF FLORIDA

COUNTY OF CITRUS

John J. Holden states that he is the Vice President and Site Director for Florida Power Corporation; that he is authorized on the part of said company to sign and file with the Nuclear Regulatory Commission the information attached hereto; and that all such statements made and matters set forth therein are true and correct to the best of his knowledge, information, and belief.

J J Holden

John J. Holden
Vice President and Site Director

Sworn to and subscribed before me this 31st day of May, 2000, by John J. Holden.

Kathy R. Tyler

Signature of Notary Public
State of Florida

Kathy R. Tyler
MY COMMISSION # CC727802 EXPIRES
May 11, 2002
BONDED THRU TROY FAIN INSURANCE, INC.

Kathy R. Tyler

(Print, type, or stamp Commissioned
Name of Notary Public)

Personally Known ✓ -OR- Produced Identification _____

FLORIDA POWER CORPORATION

CRYSTAL RIVER UNIT 3

DOCKET NUMBER 50-302 / LICENSE NUMBER DPR-72

ATTACHMENT A

LICENSE AMENDMENT REQUEST #255, REVISION 0
Emergency Feedwater Initiation and Control (EFIC) System Instrumentation

Description of Proposed Changes, Background, Reason for Request, and Evaluation of Request

**LICENSE AMENDMENT REQUEST #255, REVISION 0
EMERGENCY FEEDWATER INITIATION AND CONTROL (EFIC)
SYSTEM INSTRUMENTATION**

Description of Proposed Changes

Crystal River Unit 3 (CR-3) proposes to revise Improved Technical Specification (ITS) 3.3.11. The proposed revision will add a new Condition C that specifies the Required Action to be taken for one or more Emergency Feedwater Initiation and Control (EFIC) System channels with up to two Reactor Coolant Pump (RCP) status signals inoperable. The proposed Required Action will place the affected RCP status signals in trip. Current Conditions C, D, E and F and their associated Required Actions will be renumbered.

CR-3 also proposes to revise Table 3.3.11-1 Function 1.a and Function 1.d. For Function 1.a, the reference to control oil pressure will be deleted and the Allowable Value will be changed from ≥ 55 psig to NA. For Function 1.d, the Required Channels will be changed from 4 to 4 per RCP.

The Bases for ITS 3.3.11 will be revised to reflect new Required Action C.1, and the Bases for current Required Actions C.1, D.1, D.2, D.3, E.1 and F.1 will be renumbered.

Background

At CR-3, the status of the reactor coolant pumps is monitored by reactor coolant pump power monitors (RCPPMs). The arrangement of the RCPPMs and the RCP status signals provided by the RCPPMs to the Reactor Protection System (RPS) and Emergency Feedwater Initiation and Control (EFIC) System are shown in Figure 1.

Each RCP is monitored by two RCPPMs, configured in a one-out-of-two arrangement. Each RCPPM contains two watt transducers, which are each fed from two separate potential transformers (PTs) and two current transformers (CTs). If either watt transducer senses an overpower (≥ 14,400 kW) or underpower (≤ 1152 kW) condition for its associated RCP, an RCP tripped status signal is generated. The status signals generated by the RCPPMs for each RCP are sent to all four RPS channels. In each RPS channel, the status signals divide into two parallel signal paths. One path supplies pump status signals to the RPS channel contact monitor. The second path provides pump status signals to the corresponding EFIC channel initiate module. RPS channel A provides signals to the EFIC channel A initiate module, RPS channel B provides signals to the EFIC channel B initiate module, etc. If the RPS channel contact monitor detects tripped status signals for two or more RCPs, a reactor trip signal is generated for that RPS channel. If the EFIC initiate module detects tripped status signals for all four RCPs, an Emergency Feedwater System initiate signal is generated for that EFIC channel. The two trains of RCPPMs provide redundancy in that actuation of either train (or combination of trains) accomplishes the safety function of the system.

The RCPPMs were installed in 1981 to support the CR-3 power level upgrade from 2452 MW_{th} to 2544 MW_{th}. The RCPPMs provide protection against departure from nucleate boiling (DNB) when reactor power is greater than 2475 MW_{th}. The RCPPM RPS function was added to the RPS Section of the CR-3 Technical Specifications on July 21, 1981 by License Amendment 41. The RCPPM RPS trip provides protection for changes in reactor coolant flow due to the loss of multiple RCPs, and is credited in the loss of coolant flow accident analysis for a loss of four RCPs.

Prior to the addition of the RCPPMs, the RPS Technical Specification Conditions were specified on a channel basis since a single failure would degrade only a single channel for all functions. Due to the RCPPM RPS design, a loss of a single RCPPM for a single RCP would affect all four RPS channels. Therefore, Condition C was added to TS 3.3.1 to provide Required Actions and Completion Times for inoperable RCPPMs. This Condition maintains the RPS trip safety function when the single failure criterion is not met. In addition, Condition E was added to allow continued operation with the requirements of Condition C not met provided reactor power is reduced to less than 2475 MW_{th} and all four RCPs are operating.

The EFIC System was installed in 1985 and added to the CR-3 Technical Specifications on July 16, 1985 by License Amendment 78. The EFIC system utilizes the RCPPM pump status signals to automatically actuate Emergency Feedwater (EFW) and control level to the natural circulation level in the Once Through Steam Generators (OTSG). Loss of four RCPs is a leading indicator of the need for EFW in the safety analysis for loss of electric power and loss of coolant flow. This function is required to be operable when reactor power is greater than 10%.

Unlike the RPS Conditions, the EFIC Instrumentation Conditions are only specified on a channel basis. The EFIC Conditions do not include a Condition to address the non-standard RCPPM function design and the fact that the loss of a single RCPPM or its associated pump status signal for a single RCP will result in a loss of single failure capability for all four EFIC channels. In addition, neither the EFIC or RPS specification, nor their associated Bases sections, as initially written, specifically addressed the impact on the EFIC RCP status function resulting from bypassing one or more RCPPMs.

By not adequately reflecting the conditions resulting from the inoperability of one or more RCPPMs or the associated RCP status signals, the potential existed for not performing the appropriate Required Actions under certain conditions of RCPPM inoperability. This condition was reported in Licensee Event Report 99-003 on July 1, 1999. FPC determined that, in 1995, CR-3 had operated in a condition prohibited by ITS. Specifically, from September 2, 1995 until October 14, 1995, CR-3 operated with one RCPPM for one RCP in bypass. Although this condition is addressed by ITS 3.3.1, "Reactor Protection System (RPS) Instrumentation," this condition also applied to ITS 3.3.11, "Emergency Feedwater Initiation and Control (EFIC) System Instrumentation." FPC did not recognize the applicability of ITS 3.3.11 and as a result, the Limiting Condition for Operation (LCO) for the EFIC System instrumentation was not met.

As part of the corrective actions taken for LER 99-003, clarifying information concerning the RCPPMs was added to ITS Bases 3.3.1, "RPS Instrumentation," and ITS Bases 3.3.11, "EFIC Instrumentation." The clarifying information ensures consistent entry into the appropriate ITS Conditions when RCPPMs are inoperable.

Reason For Request

The changes to ITS 3.3.11 proposed by LAR #255 augment the improved ITS Bases guidance discussed above and the existing ITS 3.3.11 Conditions by adding a Condition that recognizes the effect of inoperable RCPPMs or their associated RCP status signals on the EFIC System RCP status function for all four EFIC channels. The proposed change to ITS 3.3.11 provides specific actions to be taken to ensure continued operability of the RCP status function for the EFIC instrumentation in the event one or more RCPPMs or the associated RCP status signals become inoperable. The proposed changes to Table 3.3.11-1 clarify the RCP status signal arrangement to EFIC and the source of the Loss of Main Feedwater pump signals to EFIC.

Evaluation of Request

Conditions C and E of the RPS Instrumentation Specification adequately address the actions to be taken for the RPS RCP status function in the event of one or more inoperable RCPPMs for one RCP. With one or more RCPPMs for one RCP inoperable, Condition C requires placing the inoperable RCPPM(s) in a tripped condition within four hours. If the Required Action and associated Completion Time of ITS 3.3.1, Condition C are not met, ITS 3.3.1 Condition E requires the plant to be placed in a MODE or condition in which the RCP status function for the RPS is not required to be OPERABLE. To achieve this status, four RCPs must be verified to be in operation and thermal power must be reduced to less than 2475 MW_{th} within one hour, or a plant shutdown must be commenced. The Required Actions of ITS 3.3.1, Condition E, are based upon analysis which demonstrates adequate protection of DNB limits is maintained for loss of coolant flow accidents under these conditions. Thus, under these conditions, the RCPPM Function is no longer required for RPS.

ITS 3.3.1 Condition E allows one or both RCPPMs for all RCPs to be bypassed indefinitely with thermal power below 2475 MW_{th}. With one RCPPM bypassed, the single failure requirement for EFIC operability is not met. With both RCPPMs for one RCP bypassed, EFIC will not initiate on loss of all four RCPs. Therefore, ITS 3.3.1, Condition E, may cause the RCP status function for all four EFIC instrumentation channels to become inoperable.

The proposed change to ITS 3.3.11, "Emergency Feedwater Initiation and Control (EFIC) System Instrumentation," provides specific actions to be taken to ensure the operability of the EFIC RCP status function under the conditions discussed above. The proposed changes require the RCP status signals sent to the EFIC Initiate Modules for the affected RCPs to be placed in trip within four hours. Since these signals are in parallel with affected pump status signals sent to the RPS contact monitors, this action can be performed for multiple RCP status signals without causing a reactor trip. In addition, since the EFW actuation signal associated with the RCPs requires all four RCP status signals to be tripped, this action can be performed for up to two affected RCPs while still providing protection against an inadvertent EFIC

actuation due to the subsequent generation of an additional actual or suprious RCP trip signal. If the Required Action and associated Completion Time of proposed ITS 3.3.11, Condition C are not met, ITS 3.3.11 Condition F (current ITS 3.3.11 Condition E) requires thermal power to be reduced to less than 10% Rated Thermal Power (RTP) within six hours. This places the plant in a MODE or condition in which the EFIC RCP status function is not required to be OPERABLE.

The proposed change to ITS Table 3.3.11-1 Function 1.d will clarify the arrangement of the RCP status signals provided to EFIC by changing the wording in the required channels column for Function 1.d. from "4" to "4 per RCP". This change will ensure consistency between Table 3.3.11-1 and the information provided in Bases Section B 3.3.11.

The proposed change to ITS Table 3.3.11-1 Function 1.a. will properly characterize the source of the loss of main feedwater pump signals to EFIC. As currently explained in Bases Section B 3.3.11, the individual RPS channels act as the sensors for the EFIC signals for a loss of main feedwater pumps. Deleting the reference to control oil pressure and changing the allowable value for the loss of main feedwater pumps signal from "≥ 55 psig" to "NA" is intended to eliminate possible misunderstanding of the signal source for a loss of main feedwater pumps and ensure consistency between Table 3.3.11-1 and Bases Section B 3.3.11. This proposed change to Function 1.a was identified as an enhancement to the EFIC Instrumentation Specification in the Root Cause Analysis conducted for LER 99-003.

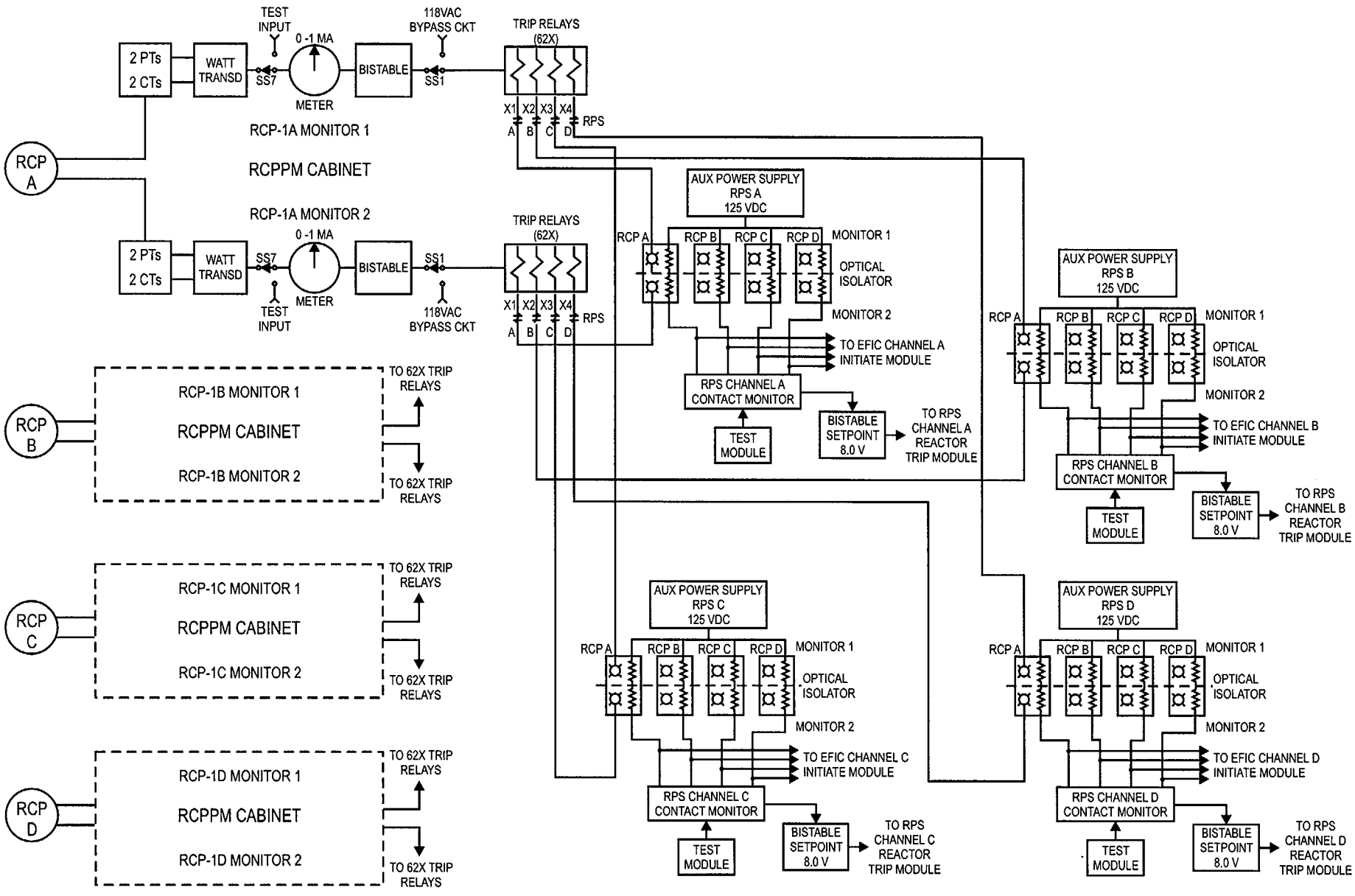

Figure 1 - Reactor Coolant Pump Power Monitor

FLORIDA POWER CORPORATION

CRYSTAL RIVER UNIT 3

DOCKET NUMBER 50-302 / LICENSE NUMBER DPR-72

ATTACHMENT B

LICENSE AMENDMENT REQUEST #255, REVISION 0
Emergency Feedwater Initiation and Control (EFIC) System Instrumentation

No Significant Hazards Consideration Determination

No Significant Hazards Consideration Determination

This licensee amendment proposes to add an additional Condition and Required Action to Improved Technical Specification (ITS) 3.3.11, "Emergency Feedwater Initiation and Control (EFIC) System Instrumentation." The Action would require tripping the affected reactor coolant pump (RCP) status signals to each of the four EFIC channels when one or more RCP status signals or Reactor Coolant Pump Power Monitors (RCPPMs) for up to two RCPs become inoperable. This action will ensure continued operability of the EFIC RCP status function when one or more RCPPMs or their associated RCP status signals are inoperable. The amendment also proposes changes to ITS Table 3.3.11-1 to properly characterize the configuration of the signals from the RCPPMs to EFIC, and to clarify source of the Loss of Main Feedwater Pump signals to EFIC. The proposed changes to Table 3.3.11-1 will provide consistency between Table 3.3.11-1 and information provided in the ITS Bases for the EFIC System Instrumentation Specification.

Florida Power Corporation (FPC) has reviewed the requirements of 10 CFR 50.92(c) as they relate to the proposed revisions to ITS 3.3.11, and Table 3.3.11-1, Emergency Feedwater Initiation and Control (EFIC) System Instrumentation. The proposed changes do not involve a significant hazards consideration. In support of this conclusion, the following analysis is provided:

(1) Does not involve a significant increase in the probability or consequences of an accident previously analyzed.

The EFIC system is not an initiator of any design basis accident. The EFIC RCP status signal function is intended to ensure emergency feedwater is available to automatically raise levels in the once through steam generator (OTSG) to the natural circulation setpoint in the event of a loss of reactor coolant system (RCS) forced flow.

The proposed license amendment adds clarifying information to ITS Table 3.3.11-1, and an additional Required Action to ITS 3.3.11 that assures continued operability of the RCP status function of the EFIC system in the event one or more RCPPMs or their associated RCP status signals become inoperable. The design functions of the EFIC system and the initial conditions for accidents that require EFIC will not be affected by the change. Therefore, the change will not increase the probability or consequences of an accident previously evaluated.

(2) Does not create the possibility of a new or different kind of accident from any accident previously analyzed.

The proposed amendment involves no changes to the design or operation of the EFIC system. The RCPPMs are part of the design of the Emergency Feedwater Initiation and Control (EFIC) System, and are assumed to function properly in the accident analysis. The proposed amendment will assure that the EFIC system performs as assumed in the safety analysis in the event of a loss of RCS forced flow. The proposed amendment change will not affect the other EFIC functions, and will not create any new plant

configurations. Therefore, the proposed change will not create the possibility of a new or different kind of accident from any accident previously evaluated.

(3) Does not involve a significant reduction in the margin of safety.

The proposed amendment adds additional actions to be taken in the event one or more RCPPMs or their associated RCP status signals become inoperable, and provides clarifying information regarding the sources and configuration of signals to EFIC. The proposed amendment ensures appropriate actions are taken to restore the operability of the EFIC RCP status function in the event that one or more RCP status signals to EFIC are lost. Thus, the proposed amendment will not result in a reduction in the margin of safety.

FLORIDA POWER CORPORATION

CRYSTAL RIVER UNIT 3

DOCKET NUMBER 50-302 / LICENSE NUMBER DPR-72

ATTACHMENT C

LICENSE AMENDMENT REQUEST #255, REVISION 0
Emergency Feedwater Initiation and Control (EFIC) System Instrumentation

Environmental Impact Evaluation

Environmental Impact Evaluation

10 CFR 51.22(c)(9) provides criteria for and identification of licensing and regulatory actions eligible for categorical exclusion from performing an environmental assessment. A proposed amendment to an operating license for a facility requires no environmental assessment if operation of the facility in accordance with the proposed amendment would not: (1) involve a significant hazards consideration, (2) result in a significant change in the types or significant increase in the amounts of any effluents that may be released offsite, or (3) result in a significant increase in individual or cumulative occupational radiation exposure.

Florida Power Corporation has reviewed this license amendment and has determined that it meets the eligibility criteria for categorical exclusion set forth in 10 CFR 51.22(c)(9). Pursuant to 10 CFR 51.22(c), no environmental impact statement or environmental assessment needs to be prepared in connection with the issuance of the proposed license amendment. The basis for this determination is as follows:

1. The proposed license amendment does not involve a significant hazards consideration as described previously in the evaluation.

2. The proposed changes add an additional Condition and Required Action to the Emergency Feedwater Initiation and Control (EFIC) System Instrumentation Specification and clarify information contained in Improved Technical Specification Table 3.3.11-1. The EFIC system does not interface with any plant system that is involved in the generation or processing of radioactive fluids. Therefore, the proposed changes will not result in a significant change in the types or increase in the amounts of any effluents that may be released off-site.

3. The proposed change involves the EFIC System, which does not interface with radiologically contaminated systems. In addition, the Required Action contained in the proposed changes will be performed in the Crystal River Unit-3 main control room, and does not require operator or other actions that could increase occupational radiation exposure. Therefore, the proposed license amendment will not result in a significant increase to the individual or cumulative occupational radiation exposure.

FLORIDA POWER CORPORATION

CRYSTAL RIVER UNIT 3

DOCKET NUMBER 50-302 / LICENSE NUMBER DPR-72

ATTACHMENT D

LICENSE AMENDMENT REQUEST #255, REVISION 0
Emergency Feedwater Initiation and Control (EFIC) System Instrumentation

Proposed Revised Improved Technical Specifications and Bases Change Pages

Strikeout / Shadow Format

~~Strikeout Text~~	Indicates deleted text
Shadowed Text	Indicates added text

ACTIONS

CONDITION	REQUIRED ACTION	COMPLETION TIME
B. (continued)	B.3 Restore one channel to OPERABLE status.	72 hours
C. One or more EFIC channels with one or two RCP status signals inoperable.	C.1 Place the affected RCP status signals in trip.	4 hours
~~C~~D. One EFW Vector Valve Control channel inoperable.	~~C~~D.1 Restore channel to OPERABLE status.	72 hours
~~D~~E. Required Action and associated Completion Time not met for Functions 1.a or 1.b.	~~D~~E.1 Be in MODE 3.	6 hours
	AND	
	~~D~~E.2 --------NOTE--------- Only required for Function 1.a. ----------	
	Open CONTROL ROD drive trip breakers.	6 hours
	AND	
	~~D~~E.3 --------NOTE--------- Only required for Function 1.b. ----------	
	Be in MODE 4.	12 hours
~~E~~F. Required Action and associated Completion Time not met for Function 1.d.	~~E~~F.1 Reduce THERMAL POWER to < 10% RTP.	6 hours

(continued)

ACTIONS (continued)

CONDITION	REQUIRED ACTION	COMPLETION TIME
~~F~~G. Required Action and associated Completion Time not met for Functions 1.c, 2, 3, or 4.	~~F~~G.1 Reduce once through steam generator (OTSG) pressure to < 750 psig.	12 hours

SURVEILLANCE REQUIREMENTS

----------NOTE----------
Refer to Table 3.3.11-1 to determine which SRs shall be performed for each EFIC Function.

SURVEILLANCE	FREQUENCY
SR 3.3.11.1 Perform CHANNEL CHECK.	12 hours
SR 3.3.11.2 Perform CHANNEL FUNCTIONAL TEST.	31 days
SR 3.3.11.3 Perform CHANNEL CALIBRATION.	24 months
----------NOTE---------- Only required to be performed in MODES 1 and 2. ---------- SR 3.3.11.4 Verify EFIC RESPONSE TIME is within limits.	24 months on a STAGGERED TEST BASIS

Table 3.3.11-1 (page 1 of 1)
Emergency Feedwater Initiation and Control System Instrumentation

FUNCTION	APPLICABLE MODES OR OTHER SPECIFIED CONDITIONS	REQUIRED CHANNELS	SURVEILLANCE REQUIREMENTS	ALLOWABLE VALUE
1. EFW Initiation				
a. Loss of MFW Pumps ~~(Control Oil Pressure)~~	1,2[a],3[a]	4	SR 3.3.11.1 SR 3.3.11.2 SR 3.3.11.3	~~≥ 55psig~~ NA
b. OTSG Level - Low	1,2,3	4 per OTSG	SR 3.3.11.1 SR 3.3.11.2 SR 3.3.11.3 SR 3.3.11.4	≥ 0 inches
c. OTSG Pressure - Low	1,2,3[b]	4 per OTSG	SR 3.3.11.1 SR 3.3.11.2 SR 3.3.11.3	≥ 600 psig
d. RCP Status	≥ 10% RTP	4 per RCP	SR 3.3.11.1 SR 3.3.11.2 SR 3.3.11.3	NA
2. EFW Vector Valve Control				
a. OTSG Pressure - Low	1,2,3[b]	4 per OTSG	SR 3.3.11.1 SR 3.3.11.2 SR 3.3.11.3	≥ 600 psig
b. OTSG Differential Pressure - High	1,2,3[b]	4	SR 3.3.11.1 SR 3.3.11.2 SR 3.3.11.3	≤ 125 psid
3. Main Steam Line Isolation				
a. OTSG Pressure - Low	1,2,3[b][c]	4 per OTSG	SR 3.3.11.1 SR 3.3.11.2 SR 3.3.11.3 SR 3.3.11.4	≥ 600 psig
4. MFW Isolation				
a. OTSG Pressure - Low	1,2,3[b][d]	4 per OTSG	SR 3.3.11.1 SR 3.3.11.2 SR 3.3.11.3 SR 3.3.11.4	≥ 600 psig

(a) When the RPS is not in shutdown bypass.

(b) When OTSG pressure ≥ 750 psig.

(c) Except when all MSIVs are closed and deactivated.

(d) Except when all MFIVs are closed and deactivated.

BASES

ACTIONS

B.1, B.2, and B.3 (continued)

With two EFW Initiation, Main Steam Line Isolation, or MFW Isolation protection channels inoperable, one channel must be placed in bypass (Required Action B.1). Bypassing another channel is not possible due to system interlocks. Therefore, the second channel must be tripped (Required Action B.2) to prevent a single failure from causing loss of the EFIC Function. The 1 hour Completion Time is adequate to perform the Required Actions and minimizes the period of time the plant is at risk due to this condition.

Required Action B.3 provides a limit on the period of time an EFIC instrumentation channel is allowed to remain in bypass. While this Condition appears to satisfy system single failure considerations, it was not analyzed as part of the plant's original licensing basis and it is possible this configuration would not satisfy all aspects of IEEE 279 single failure criteria. As a result, the 72 hour Completion Time was added to impose a limit on the period of time the plant is allowed to operate in this Condition. As such, the Completion Time is based on engineering judgment and the IEEE 279 recommendations.

C.1

With one or more RCPPMs or the associated RCP status signals for one or two RCPs inoperable, placing the affected RCP status signals for each EFIC channel in trip will ensure OPERABILITY of the RCP status Function for the EFIC instrumentation. Required Action C.1 can be performed for up to two inoperable RCPPMs or their associated status signals and still provide protection against an inadvertent EFIC actuation due to the subsequent generation of an additional actual or spurious RCP trip signal. The 4 hour Completion Time is adequate to perform the Required Actions.

~~C~~D.1

The EFW Vector Valve Control Function is required to meet the single-failure criterion for both the function of providing EFW on demand and isolating an OTSG when required. These conflicting requirements result in the necessity for two valves in series, in parallel with two valves in series, and a four channel valve command system. Refer to LCO 3.3.14, "Emergency Feedwater Initiation and Control (EFIC) Emergency Feedwater (EFW)-Vector Valve Logic" for a discussion of the logic of the system.

With one EFW Vector Valve Control channel inoperable, the system cannot meet the single-failure criterion and still meet the dual functional criteria described above. This Condition is analogous to having one EFW train inoperable. Therefore, when one vector valve control channel is inoperable, the channel must be restored to OPERABLE status within 72 hours. This Condition and Completion Time combination is consistent with the Completion Time associated with the loss of one train of EFW.

(continued)

BASES

ACTIONS (continued)

~~DE.1,DE.2-1,~~DE.3~~2-2~~,EF.1, and FG.1

If the Required Actions cannot be met within the associated Completion Time, the plant must be placed in a MODE or condition in which the requirement for the particular Function does not apply. This requires the operator to open the CRD trip breakers for Function 1.a, MODE 4 for Function 1.b, reduce power to less than 10% RTP for Function 1.d, and reduce OTSG pressure to less than 750 psig for all other Functions. The allowed Completion Times are reasonable, based on operating experience, to reach the specified conditions from full power conditions in an orderly manner and without challenging plant systems.

SURVEILLANCE REQUIREMENTS

A Note indicates that the SRs for each EFIC instrumentation Function are identified in the SRs column of Table 3.3.11-1. All Functions are subject to CHANNEL CHECK, CHANNEL FUNCTIONAL TEST, and CHANNEL CALIBRATION. The SG-Low Level Function is modeled in transient analysis, and is subject to response time testing. Response time testing is also required for Main Steam Line and MFW Isolation. Individual EFIC subgroup relays must also be tested, one at a time, to verify the individual EFIC components will actuate when required. Some components cannot be tested at power since their actuation might lead to reactor trip or equipment damage. These are specifically identified and must be tested when shut down. The various SRs account for individual functional differences and for test frequencies applicable specifically to the Functions listed in Table 3.3.11-1. The operational bypasses associated with each EFIC instrumentation channel are also subject to these SRs to ensure OPERABILITY of the EFIC instrumentation channel when required.

SR 3.3.11.1

Performance of the CHANNEL CHECK once every 12 hours ensures that a gross failure of instrumentation has not occurred. A CHANNEL CHECK is a comparison of the parameter indicated on one channel to a similar parameter on other channels. It is based on the assumption that instrument channels

(continued)

FLORIDA POWER CORPORATION

CRYSTAL RIVER UNIT 3

DOCKET NUMBER 50-302 / LICENSE NUMBER DPR-72

ATTACHMENT E

LICENSE AMENDMENT REQUEST #255 REVISION 0
Emergency Feedwater Initiation and Control (EFIC) System Instrumentation

Proposed Revised Improved Technical Specifications and Bases Change Pages

Revision Bar Format

ACTIONS

CONDITION	REQUIRED ACTION	COMPLETION TIME
B. (continued)	B.3 Restore one channel to OPERABLE status.	72 hours
C. One or more EFIC channels with one or two RCP status signals inoperable.	C.1 Place the affected RCP status signals in trip.	4 hours
D. One EFW Vector Valve Control channel inoperable.	D.1 Restore channel to OPERABLE status.	72 hours
E. Required Action and associated Completion Time not met for Functions 1.a or 1.b.	E.1 Be in MODE 3.	6 hours
	AND	
	E.2 --------NOTE--------- Only required for Function 1.a. ----------	
	Open CONTROL ROD drive trip breakers.	6 hours
	AND	
	E.3 --------NOTE--------- Only required for Function 1.b. ----------	
	Be in MODE 4.	12 hours
F. Required Action and associated Completion Time not met for Function 1.d.	F.1 Reduce THERMAL POWER to < 10% RTP.	6 hours

(continued)

ACTIONS (continued)

CONDITION	REQUIRED ACTION	COMPLETION TIME
G. Required Action and associated Completion Time not met for Functions 1.c, 2, 3, or 4.	G.1 Reduce once through steam generator (OTSG) pressure to < 750 psig.	12 hours

SURVEILLANCE REQUIREMENTS

----------NOTE----------
Refer to Table 3.3.11-1 to determine which SRs shall be performed for each EFIC Function.

SURVEILLANCE	FREQUENCY
SR 3.3.11.1 Perform CHANNEL CHECK.	12 hours
SR 3.3.11.2 Perform CHANNEL FUNCTIONAL TEST.	31 days
SR 3.3.11.3 Perform CHANNEL CALIBRATION.	24 months
----------NOTE---------- Only required to be performed in MODES 1 and 2. ---------- SR 3.3.11.4 Verify EFIC RESPONSE TIME is within limits.	24 months on a STAGGERED TEST BASIS

Table 3.3.11-1 (page 1 of 1)
Emergency Feedwater Initiation and Control System Instrumentation

FUNCTION	APPLICABLE MODES OR OTHER SPECIFIED CONDITIONS	REQUIRED CHANNELS	SURVEILLANCE REQUIREMENTS	ALLOWABLE VALUE
1. EFW Initiation				
a. Loss of MFW Pumps	1,2[a],3[a]	4	SR 3.3.11.1 SR 3.3.11.2 SR 3.3.11.3	N/A
b. OTSG Level - Low	1,2,3	4 per OTSG	SR 3.3.11.1 SR 3.3.11.2 SR 3.3.11.3 SR 3.3.11.4	≥ 0 inches
c. OTSG Pressure - Low	1,2,3[b]	4 per OTSG	SR 3.3.11.1 SR 3.3.11.2 SR 3.3.11.3	≥ 600 psig
d. RCP Status	≥ 10% RTP	4 per RCP	SR 3.3.11.1 SR 3.3.11.2 SR 3.3.11.3	NA
2. EFW Vector Valve Control				
a. OTSG Pressure - Low	1,2,3[b]	4 per OTSG	SR 3.3.11.1 SR 3.3.11.2 SR 3.3.11.3	≥ 600 psig
c. OTSG Differential Pressure - High	1,2,3[b]	4	SR 3.3.11.1 SR 3.3.11.2 SR 3.3.11.3	≤ 125 psid
3. Main Steam Line Isolation				
a. OTSG Pressure - Low	1,2,3[b][c]	4 per OTSG	SR 3.3.11.1 SR 3.3.11.2 SR 3.3.11.3 SR 3.3.11.4	≥ 600 psig
4. MFW Isolation				
a. OTSG Pressure - Low	1,2,3[b][d]	4 per OTSG	SR 3.3.11.1 SR 3.3.11.2 SR 3.3.11.3 SR 3.3.11.4	≥ 600 psig

(a) When the RPS is not in shutdown bypass.

(b) When OTSG pressure ≥ 750 psig.

(c) Except when all MSIVs are closed and deactivated.

(d) Except when all MFIVs are closed and deactivated.

BASES

ACTIONS

B.1, B.2, and B.3 (continued)

With two EFW Initiation, Main Steam Line Isolation, or MFW Isolation protection channels inoperable, one channel must be placed in bypass (Required Action B.1). Bypassing another channel is not possible due to system interlocks. Therefore, the second channel must be tripped (Required Action B.2) to prevent a single failure from causing loss of the EFIC Function. The 1 hour Completion Time is adequate to perform the Required Actions and minimizes the period of time the plant is at risk due to this condition.

Required Action B.3 provides a limit on the period of time an EFIC instrumentation channel is allowed to remain in bypass. While this Condition appears to satisfy system single failure considerations, it was not analyzed as part of the plant's original licensing basis and it is possible this configuration would not satisfy all aspects of IEEE 279 single failure criteria. As a result, the 72 hour Completion Time was added to impose a limit on the period of time the plant is allowed to operate in this Condition. As such, the Completion Time is based on engineering judgment and the IEEE 279 recommendations.

C.1

With one or more RCPPMs or the associated RCP status signals for one or two RCPs inoperable, placing the affected RCP status signals for each EFIC channel in trip will ensure OPERABILITY of the RCP status Function for the EFIC instrumentation. Required Action C.1 can be performed for up to two inoperable RCPPMs or their associated status signals and still provide protection against an inadvertent EFIC actuation due to the subsequent generation of an additional actual or spurious RCP trip signal. The 4 hour Completion Time is adequate to perform the Required Actions.

D.1

The EFW Vector Valve Control Function is required to meet the single-failure criterion for both the function of providing EFW on demand and isolating an OTSG when required. These conflicting requirements result in the necessity for two valves in series, in parallel with two valves in series, and a four channel valve command system. Refer to LCO 3.3.14, "Emergency Feedwater Initiation and Control (EFIC) Emergency Feedwater (EFW)-Vector Valve Logic" for a discussion of the logic of the system.

With one EFW Vector Valve Control channel inoperable, the system cannot meet the single-failure criterion and still meet the dual functional criteria described above. This Condition is analogous to having one EFW train inoperable. Therefore, when one vector valve control channel is inoperable, the channel must be restored to OPERABLE status within 72 hours. This Condition and Completion Time combination is consistent with the Completion Time associated with the loss of one train of EFW.

continued)