72-1015

NAC INTERNATIONAL

Atlanta Corporate Headquarters
655 Engineering Drive
Norcross, Georgia 30092 USA
Phone +1-770-447-1144
Fax +1-770-447-1797
www.nacintl.com

May 31, 2000

U.S. Nuclear Regulatory Commission
11555 Rockville Pike
Rockville, MD 20852-2738

Attn: Document Control Desk

Subject: Docket No. 72-1015

Submittal of Responses to Telecon RAIs as Supplemental Information for the UMS® Universal Storage System Amendment for Maine Yankee Atomic Power Company Site Specific Spent Fuel (TAC No. L22979)

References:

1. Submittal of Responses to Telecon RAIs as Supplemental Information for the UMS® Universal Storage System Amendment for Maine Yankee Atomic Power Company Site Specific Spent Fuel (UMSS-00C), April 2000

2. Submittal of Responses to the Request for Additional Information (RAI-1) for the NAC-UMS® Universal Storage System Amendment for Maine Yankee Atomic Power Company Site Specific Spent Fuel, NAC International, February 4, 2000

NAC International (NAC) herewith submits 10 copies of Responses to Telecon RAIs as Supplemental Information for the NAC-UMS® Universal Storage System Amendment for Maine Yankee Atomic Power Company site specific spent fuel. This submittal includes the telecon RAI comments and NAC's responses presented in the standard NAC RAI response format, followed by the SAR Revision UMSS-00D changed pages for the NAC-UMS® Maine Yankee SAR. The List of Effective Pages and the Master Table of Contents for the SAR are updated to incorporate the text and page changes in the body of the SAR.

The telecon RAI responses and the SAR changed pages in this submittal include the following:

- Revision to water flow path discussions during draining and reflooding for Sections 1.2.1.2.1 (PWR Fuel Basket) and 1.2.1.2.2 (BWR Fuel Basket);
- Addition of Section 11.2.16, Damaged Fuel Assembly Hardware Evaluation – fuel rod buckling for fuel assemblies with missing support grid strap (an unsupported span of 60 inches) and fuel rod bending for lateral impact with 60g bounding acceleration;
- Incorporation of ISG-11, Revision 1, in Chapter 2, 4, 7, and 12;
- Minor administrative/editorial revisions in Chapter 3.

NMSS01 Public

ED20000628

NAC INTERNATIONAL

If you have any comments or questions, please contact me at (770) 447-1144.

Sincerely,

T. C. Thompson

Thomas C. Thompson
Director, Licensing and Competitive Assessment
Engineering & Design Services

Enclosure

cc (w/o enclosure):	P. Bemis	(SWEC)	G. Zinke	(MY)
	E. Washer	(SWEC)	P. Plante	(MY)
	M. Meisner	(MY)		

12412-SAR-002

DOCKET NO. 72-1015

UMS®

UNIVERSAL MPC SYSTEM®

SAFETY ANALYSIS REPORT

for the

UMS® UNIVERSAL STORAGE CASK

Amendment for

MAINE YANKEE ATOMIC POWER COMPANY

Site Specific Spent Fuel

May 2000 UMSS-00D

NAC INTERNATIONAL

NAC INTERNATIONAL

RESPONSE TO THE

UNITED STATES
NUCLEAR REGULATORY COMMISSION

REQUEST FOR ADDITIONAL INFORMATION

NAC-UMS® UNIVERSAL STORAGE SYSTEM

(TAC NO. L22511, DOCKET NO. 72-1015)

MAY 2000

NAC INTERNATIONAL RESPONSE
TO
TELECON REQUEST FOR ADDITIONAL INFORMATION

1. NAC should revise the SAR text, as appropriate, with respect to free drainage of the fuel tubes and flux traps through the bottom weldment, since the fuel tubes do not extend beyond the bottom weldment. The current discussion of notches at the bottom of the fuel tubes is no longer applicable.

NAC Response

Sections 1.2.1.2.1 (PWR Fuel Basket) and 1.2.1.2.2 (BWR Fuel Basket), are revised to include a discussion of the water flow paths during draining or reflooding of the Transportable Storage Canister.

Water fills and drains freely between the basket disks through three separate paths. One path is the gaps that exist between the disks and the canister shell. The second path is through the gaps between the fuel tubes and the disks that surround the fuel tubes. The third path is through holes in each of the disks that provide an additional path for water flow between disks.

Additionally, the basket bottom weldment supports the fuel tubes above the canister bottom plate. The fuel tubes are open at the top and bottom ends, allowing free flow of water from the bottom of the fuel tube. The bottom weldment is positioned by supports above the canister bottom to facilitate water flow to the drain line.

NAC INTERNATIONAL RESPONSE
TO
TELECON REQUEST FOR ADDITIONAL INFORMATION

2. The "Buckling Evaluation for Fuel Assemblies with Missing Grid Straps" presented on SAR Page 11.2.15-25 of the UMS-MY SAR Revision UMSS-00C should be rewritten as a separate section of the SAR and expanded to be similar to SAR Section 11.2.15.1.5, "Buckling Evaluation for High Burnup Fuel Rods," since the evaluation bounds all fuel rods, not just high burnup rods. This new separate section should also include a rod bending stress evaluation for a lateral impact condition with a g-load that bounds the transport accident condition (dual-purpose system) for the 60-inch unsupported span.

NAC Response

The Safety Analysis Report is revised to add Section 11.2.16. This section addresses fuel rod buckling for fuel assemblies with a missing grid strap – span of 60 inches.

Section 11.2.16 also addresses a fuel rod bending stress evaluation for a lateral impact with a 60g bounding acceleration. The bending margin of safeties for a lateral impact are 0.86 for ultimate strength and 0.75 for yield strength.

NAC INTERNATIONAL RESPONSE
TO
TELECON REQUEST FOR ADDITIONAL INFORMATION

3. Revise Chapter 2 as necessary to include high burnup fuel.

NAC Response

Sections 2.1.3.1.6 and 2.1.3.1.7 are revised to incorporate the definition of intact and damaged high burnup fuel as provided in ISG-11, Revision 1.

NAC INTERNATIONAL RESPONSE
TO
TELECON REQUEST FOR ADDITIONAL INFORMATION

4. Revise Chapter 7 to include a statement that the canister is "leaktight" for confinement, so failure of high burnup fuel rods is not an issue.

NAC Response

Section 7.4.1 is revised to specify that the canister is tested to demonstrate that it is leak tight for all of the spent fuel configurations including Maine Yankee high burnup fuel rods.

NAC INTERNATIONAL RESPONSE
TO
TELECON REQUEST FOR ADDITIONAL INFORMATION

5. Revise the Technical Specifications in Chapter 12, as appropriate, to incorporate administrative controls to ensure that ISG-11, Revision 1, is complied with. Revise the definition of damaged fuel to include the category of high burnup fuel.

NAC Response

The definition of high burnup fuel in Section A 1.1 of Chapter 12 is revised to incorporate the criteria for intact and damaged fuel specified in ISG-11, Revision1. The definition in Table 1-1 is similarly revised.

Section A 5.7 is added to provide administrative controls to ensure compliance with the cladding oxide layer thickness limits for high burnup fuel.

NAC INTERNATIONAL RESPONSE
TO
TELECON REQUEST FOR ADDITIONAL INFORMATION

6. Revise Chapter 4 as necessary to state that fuel cladding temperatures meet the 1% creep strain limit (Refer to second paragraph, page 3, of ISG-11, Revision 1).

NAC Response

The thermal analysis provided in Chapter 4 for both the design basis fuel and Maine Yankee fuel incorporates the 1% creep strain limit. Figures 4.4.7-1 and 4.4.7-2 for the design basis fuel burned to 45,000 MWD/MTU, and Figure 4.5.1.2-2 for Maine Yankee fuel burned to 50,000 MWD/MTU, are based on data presented in PNL-6189 and PNL-6364, which both incorporate a CSFM methodology.

The loading limitations for the Maine Yankee high burnup fuel, with an oxide layer, are based on an assumed oxide layer thickness of 120 microns. Evaluation against the 1% creep stress limit is conservative with respect to the 80 micron limit for classifying high burnup fuel as intact.

Section 4.5.1.2.1 is revised to incorporate the statement that the high burnup fuel cladding temperature evaluation considers the creep strain limit for fuel assemblies.

As noted in Section 3.6.1.2, high burnup fuel classified as damaged is loaded into a Maine Yankee fuel can.

NAC INTERNATIONAL RESPONSE
TO
TELECON REQUEST FOR ADDITIONAL INFORMATION

7. In Chapters 4 and 12, as appropriate, review the "delta T" margin increase or decrease between the calculated maximum component temperatures for reduced heat loads and the temperature limit and the delta T calculated for the design basis heat load.

NAC Response

The evaluation of the maximum content (fuel cladding and heat transfer disk) temperatures at variable heat loads (lower than the design basis) shows that there is an increase in the maximum content temperature at the lower heat loads. The increased temperatures are a function of the length of time that the canister and contents are allowed to remain in the vacuum condition and/or the helium backfill condition, not just the heat load. The variable heat load evaluations are performed using the same 2D axisymmetric model as was used for the 23 kW design basis load case. The increased temperatures result in a smaller margin (ΔT) between the calculated maximum contents temperature and the allowable temperatures. As shown in the table below, the ΔT for the heat transfer disk is reduced from 162°F in the design basis heat load case to 82°F in the 20 kW and 11 kW heat load cases. While the ΔT for the heat transfer disk in the vacuum condition is lower for the variable heat loads than it is for the design basis heat load, it provides a satisfactory margin for safe operation during canister closure.

Heat load (kW)	Max. contents temperature in vacuum condition(4)	Max. contents temperature in helium backfill condition(4)	ΔT for fuel in vacuum(1)	ΔT for fuel in helium backfill(1)	ΔT for heat transfer disk in vacuum(2)	ΔT for heat transfer disk in helium backfill (2)
23(3)	538	686	520	372	162	14
20	618	685	440	373	82	15
17	612	645	446	413	88	55
14	617	569	441	489	83	131
11	618	486	440	572	82	214
8	609	392	449	666	91	308

1) The fuel cladding allowable is 1058°F.
2) The heat transfer disk allowable is 700°F (Limiting component temperature).
3) This heat load corresponds to the evaluation for the PWR in SAR Table 4.1-4 using 23 kW.
4) This is the maximum temperature for this condition and corresponds to the temperature at the end of the condition (SAR Table 4.4.3-5).

NAC INTERNATIONAL RESPONSE
TO
TELECON REQUEST FOR ADDITIONAL INFORMATION

NAC Response (Continued)

A reduction in ΔT also occurs for the fuel cladding in the vacuum condition for the variable heat loads. However, since the design basis ΔT is very large, the ΔT for the variable heat load cases also remains very large (i.e., 440°F minimum).

Although the ΔT does decrease for the vacuum condition for the variable heat loads, the ΔT for both the fuel cladding and the heat transfer disks is shown to increase for the helium backfill condition.

Based on this evaluation, the design is adequate to accommodate the variable heat load conditions, as described. Section 4.4.3.1 is revised to incorporate the results of this evaluation. Since acceptable margin exists in all of the potential configurations, a revision to the fuel loading conditions provided in Appendix B of Chapter 12 is not required.

List of Effective Pages

Master Table of Contents

i ..... Revision UMSS-99E
ii ..... Revision UMSS-99E
iii ..... Revision UMSS-99E
iv ..... Revision UMSS-00D
v ..... Revision UMSS-00C
vi ..... Revision UMSS-99E
vii ..... Revision UMSS-99E
viii ..... Revision UMSS-99E
ix ..... Revision UMSS-00B
x ..... Revision UMSS-00A
xi ..... Revision UMSS-99E
xii ..... Revision UMSS-99E
xiii ..... Revision UMSS-99E
xiv ..... Revision UMSS-99E
xv ..... Revision UMSS-00D
xvi ..... Revision UMSS-99E

Chapter 1

1-i ..... Revision UMSS-99D
1-ii ..... Revision 1
1-1 ..... Revision 1
1-2 ..... Revision 1
1-3 ..... Revision UMSS-00B
1-4 ..... Revision UMSS-00D
1-5 ..... Revision UMSS-00B
1-6 ..... Revision UMSS-00B
1-7 ..... Revision UMSS-00B
1-8 ..... Revision UMSS-00B
1.1-1 ..... Revision UMSS-99D
1.1-2 ..... Revision UMSS-99D
1.1-3 ..... Revision 1
1.1-4 ..... Revision 1
1.2-1 ..... Revision 1
1.2-2 ..... Revision 1
1.2-3 ..... Revision 1
1.2-4 ..... Revision 1
1.2-5 ..... Revision UMSS-00D
1.2-6 ..... Revision UMSS-00D
1.2-7 ..... Revision 1
1.2-8 ..... Revision 1
1.2-9 ..... Revision 1
1.2-10 ..... Revision 1
1.2-11 ..... Revision 1
1.2-12 ..... Revision 1
1.2-13 ..... Revision 1
1.2-14 ..... Revision 1
1.2-15 ..... Revision 1
1.2-16 ..... Revision 1
1.2-17 ..... Revision 1
1.2-18 ..... Revision 1
1.2-19 ..... Revision 1
1.2-20 ..... Revision 1
1.2-21 ..... Revision 1
1.2-22 ..... Revision 1
1.2-23 ..... Revision 1
1.2-24 ..... Revision 1
1.2-25 ..... Revision 1
1.2-26 ..... Revision 1
1.2-27 ..... Revision 1
1.3-1 ..... Revision UMSS-99D
1.3-2 ..... Revision UMSS-99D
1.3-3 ..... Revision UMSS-00B
1.4-1 ..... Revision 1
1.4-2 ..... Revision 1
1.5-1 ..... Revision 1
1.5-2 ..... Revision 1
1.5-3 ..... Revision 1

List of Effective Pages (continued)

1.5-4 ..... Revision 1
1.5-5 ..... Revision 1
1.5-6 ..... Revision 1
1.5-7 ..... Revision 1
1.5-8 ..... Revision 1
1.5-9 ..... Revision 1
1.5-10 ..... Revision 1
1.5-11 ..... Revision 1
1.5-12 ..... Revision 1
1.5-13 ..... Revision 1
1.5-14 ..... Revision 1
1.5-15 ..... Revision 1
1.5-16 ..... Revision 1
1.5-17 ..... Revision 1
1.5-18 ..... Revision 1
1.5-19 ..... Revision 1
1.5-20 ..... Revision 1
1.5-21 ..... Revision 1
1.5-22 ..... Revision 1
1.5-23 ..... Revision 1
1.5-24 ..... Revision 1
1.5-25 ..... Revision 1
1.5-26 ..... Revision 1
1.5-27 ..... Revision 1
1.5-28 ..... Revision 1
1.5-29 ..... Revision 1
1.5-30 ..... Revision 1
1.5-31 ..... Revision 1
1.5-32 ..... Revision 1
1.5-33 ..... Revision 1
1.5-34 ..... Revision 1
1.5-35 ..... Revision 1
1.5-36 ..... Revision 1
1.5-37 ..... Revision 1
1.5-38 ..... Revision 1
1.5-39 ..... Revision 1
1.5-40 ..... Revision 1
1.5-41 ..... Revision 1
1.5-42 ..... Revision 1
1.5-43 ..... Revision 1
1.5-44 ..... Revision 1
1.5-45 ..... Revision 1
1.5-46 ..... Revision 1
1.5-47 ..... Revision 1
1.5-48 ..... Revision 1
1.5-49 ..... Revision 1
1.5-50 ..... Revision 1
1.5-51 ..... Revision 1
1.5-52 ..... Revision 1
1.5-53 ..... Revision 1
1.5-54 ..... Revision 1
1.6-1 ..... Revision 1
1.6-2 ..... Revision 1
1.7-1 ..... Revision 1
1.7-2 ..... Revision 1
1.7-3 ..... Revision 1
1.8-1 ..... Revision UMSS-00C
1.8-2 ..... Revision UMSS-00D

28 drawings (see Section 1.8)

Chapter 2

2-i ..... Revision UMSS-99D
2-ii ..... Revision 1
2-iii ..... Revision UMSS-00B
2-iv ..... Revision UMSS-00B
2-1 ..... Revision 1
2-2 ..... Revision 1
2-3 ..... Revision 1
2.1-1 ..... Revision UMSS-99D

List of Effective Pages (continued)

2.1.1-1 ..... Revision UMSS-99D
2.1.1-2 ..... Revision 1
2.1.1-3 ..... Revision 1
2.1.1-4 ..... Revision 1
2.1.2-1 ..... Revision 1
2.1.2-2 ..... Revision 1
2.1.2-3 ..... Revision 1
2.1.2-4 ..... Revision 1
2.1.3-1 ..... Revision UMSS-00A
2.1.3-2 ..... Revision UMSS-00A
2.1.3-3 ..... Revision UMSS-00A
2.1.3-4 ..... Revision UMSS-00A
2.1.3-5 ..... Revision UMSS-00D
2.1.3-6 ..... Revision UMSS-00C
2.1.3-7 ..... Revision UMSS-00D
2.1.3-8 ..... Revision UMSS-00B
2.1.3-9 ..... Revision UMSS-00C
2.1.3-10 ..... Revision UMSS-00B
2.1.3-11 ..... Revision UMSS-00B
2.2-1 ..... Revision UMSS-99D
2.2-2 ..... Revision 1
2.2-3 ..... Revision 1
2.2-4 ..... Revision 1
2.2-5 ..... Revision 1
2.2-6 ..... Revision 1
2.2-7 ..... Revision 1
2.2-8 ..... Revision 1
2.2-9 ..... Revision 1
2.2-10 ..... Revision 1
2.2-11 ..... Revision 1
2.3-1 ..... Revision 1
2.3-2 ..... Revision 1
2.3-3 ..... Revision 1
2.3-4 ..... Revision 1
2.3-5 ..... Revision UMSS-99D
2.3-6 ..... Revision 1
2.3-7 ..... Revision 1
2.3-8 ..... Revision 1
2.3-9 ..... Revision 1
2.3-10 ..... Revision 1
2.3-11 ..... Revision 1
2.3-12 ..... Revision UMSS-00C
2.3-13 ..... Revision UMSS-00C
2.3-14 ..... Revision UMSS-00C
2.3-15 ..... Revision UMSS-00C
2.3-16 ..... Revision UMSS-00C
2.4-1 ..... Revision 1
2.4-2 ..... Revision 1
2.4-3 ..... Revision 1
2.4-4 ..... Revision 1
2.5-1 ..... Revision 1
2.5-2 ..... Revision UMSS-00C

Chapter 3

3-i ..... Revision UMSS-00D
3-ii ..... Revision UMSS-99D
3-iii ..... Revision 1
3-iv ..... Revision 1
3-v ..... Revision UMSS-00D
3-vi ..... Revision 1
3.1-1 ..... Revision 1
3.1-2 ..... Revision 1
3.1-3 ..... Revision UMSS-00C
3.1-4 ..... Revision UMSS-00C
3.1-5 ..... Revision UMSS-00C
3.1-6 ..... Revision 1
3.1-7 ..... Revision 1
3.2-1 ..... Revision 1
3.2-2 ..... Revision UMSS-99D
3.2-3 ..... Revision UMSS-99D

List of Effective Pages (continued)

3.3-1 ..... Revision UMSS-00D
3.3-2 ..... Revision UMSS-00D
3.3-3 ..... Revision UMSS-00C
3.3-4 ..... Revision UMSS-00C
3.3-5 ..... Revision UMSS-00C
3.3-6 ..... Revision UMSS-00C
3.3-7 ..... Revision UMSS-00C
3.3-8 ..... Revision UMSS-00C
3.3-9 ..... Revision UMSS-00C
3.3-10 ..... Revision UMSS-00C
3.3-11 ..... Revision UMSS-00C
3.3-12 ..... Revision UMSS-00C
3.3-13 ..... Revision UMSS-00C
3.3-14 ..... Revision UMSS-00C
3.4.1-1 ..... Revision 1
3.4.1-2 ..... Revision 1
3.4.1-3 ..... Revision 1
3.4.1-4 ..... Revision 1
3.4.1-5 ..... Revision UMSS-99E
3.4.1-6 ..... Revision UMSS-99E
3.4.1-7 ..... Revision 1
3.4.1-8 ..... Revision 1
3.4.1-9 ..... Revision 1
3.4.1-10 ..... Revision 1
3.4.2-1 ..... Revision 1
3.4.2-2 ..... Revision 1
3.4.3-1 ..... Revision 1
3.4.3-2 ..... Revision 1
3.4.3-3 ..... Revision 1
3.4.3-4 ..... Revision 1
3.4.3-5 ..... Revision 1
3.4.3-6 ..... Revision 1
3.4.3-7 ..... Revision 1
3.4.3-8 ..... Revision 1
3.4.3-9 ..... Revision 1
3.4.3-10 ..... Revision 1
3.4.3-11 ..... Revision 1
3.4.3-12 ..... Revision 1
3.4.3-13 ..... Revision 1
3.4.3-14 ..... Revision 1
3.4.3-15 ..... Revision 1
3.4.3-16 ..... Revision 1
3.4.3-17 ..... Revision 1
3.4.3-18 ..... Revision 1
3.4.3-19 ..... Revision 1
3.4.3-20 ..... Revision 1
3.4.3-21 ..... Revision 1
3.4.3-22 ..... Revision 1
3.4.3-23 ..... Revision 1
3.4.3-24 ..... Revision 1
3.4.3-25 ..... Revision 1
3.4.3-26 ..... Revision 1
3.4.3-27 ..... Revision 1
3.4.3-28 ..... Revision 1
3.4.3-29 ..... Revision 1
3.4.3-30 ..... Revision 1
3.4.3-31 ..... Revision 1
3.4.3-32 ..... Revision 1
3.4.3-33 ..... Revision 1
3.4.3-34 ..... Revision 1
3.4.3-35 ..... Revision 1
3.4.3-36 ..... Revision 1
3.4.3-37 ..... Revision 1
3.4.3-38 ..... Revision 1
3.4.3-39 ..... Revision 1
3.4.3-40 ..... Revision 1
3.4.3-41 ..... Revision 1
3.4.3-42 ..... Revision 1
3.4.3-43 ..... Revision 1
3.4.3-44 ..... Revision 1

List of Effective Pages (continued)

3.4.3-45 ..... Revision 1
3.4.3-46 ..... Revision 1
3.4.3-47 ..... Revision 1
3.4.3-48 ..... Revision 1
3.4.3-49 ..... Revision 1
3.4.3-50 ..... Revision 1
3.4.3-51 ..... Revision 1
3.4.3-52 ..... Revision 1
3.4.3-53 ..... Revision 1
3.4.3-54 ..... Revision 1
3.4.3-55 ..... Revision 1
3.4.4-1 ..... Revision 1
3.4.4-2 ..... Revision 1
3.4.4-3 ..... Revision 1
3.4.4-4 ..... Revision 1
3.4.4-5 ..... Revision 1
3.4.4-6 ..... Revision 1
3.4.4-7 ..... Revision 1
3.4.4-8 ..... Revision 1
3.4.4-9 ..... Revision 1
3.4.4-10 ..... Revision 1
3.4.4-11 ..... Revision 1
3.4.4-12 ..... Revision 1
3.4.4-13 ..... Revision 1
3.4.4-14 ..... Revision 1
3.4.4-15 ..... Revision 1
3.4.4-16 ..... Revision 1
3.4.4-17 ..... Revision 1
3.4.4-18 ..... Revision 1
3.4.4-19 ..... Revision 1
3.4.4-20 ..... Revision 1
3.4.4-21 ..... Revision 1
3.4.4-22 ..... Revision 1
3.4.4-23 ..... Revision 1
3.4.4-24 ..... Revision 1
3.4.4-25 ..... Revision 1
3.4.4-26 ..... Revision 1
3.4.4-27 ..... Revision 1
3.4.4-28 ..... Revision 1
3.4.4-29 ..... Revision 1
3.4.4-30 ..... Revision 1
3.4.4-31 ..... Revision 1
3.4.4-32 ..... Revision 1
3.4.4-33 ..... Revision 1
3.4.4-34 ..... Revision 1
3.4.4-35 ..... Revision 1
3.4.4-36 ..... Revision 1
3.4.4-37 ..... Revision 1
3.4.4-38 ..... Revision 1
3.4.4-39 ..... Revision 1
3.4.4-40 ..... Revision 1
3.4.4-41 ..... Revision 1
3.4.4-42 ..... Revision 1
3.4.4-43 ..... Revision 1
3.4.4-44 ..... Revision 1
3.4.4-45 ..... Revision 1
3.4.4-46 ..... Revision 1
3.4.4-47 ..... Revision 1
3.4.4-48 ..... Revision 1
3.4.4-49 ..... Revision 1
3.4.4-50 ..... Revision 1
3.4.4-51 ..... Revision 1
3.4.4-52 ..... Revision 1
3.4.4-53 ..... Revision 1
3.4.4-54 ..... Revision 1
3.4.4-55 ..... Revision 1
3.4.4-56 ..... Revision 1
3.4.4-57 ..... Revision 1
3.4.4-58 ..... Revision 1
3.4.4-59 ..... Revision 1

List of Effective Pages (continued)

3.4.4-60 ..... Revision 1
3.4.4-61 ..... Revision 1
3.4.4-62 ..... Revision 1
3.4.4-63 ..... Revision 1
3.4.4-64 ..... Revision 1
3.4.4-65 ..... Revision 1
3.4.4-66 ..... Revision 1
3.4.4-67 ..... Revision 1
3.4.4-68 ..... Revision 1
3.4.4-69 ..... Revision 1
3.4.4-70 ..... Revision 1
3.4.4-71 ..... Revision 1
3.4.4-72 ..... Revision 1
3.4.4-73 ..... Revision 1
3.4.4-74 ..... Revision 1
3.4.4-75 ..... Revision 1
3.4.4-76 ..... Revision 1
3.4.4-77 ..... Revision 1
3.4.5-1 ..... Revision UMSS-00A
3.5-1 ..... Revision 1
3.6-1 ..... Revision UMSS-99D
3.6-2 ..... Revision UMSS-99D
3.6-3 ..... Revision UMSS-00B
3.6-4 ..... Revision UMSS-00B
3.6-5 ..... Revision UMSS-00A
3.6-6 ..... Revision UMSS-00A
3.6-7 ..... Revision UMSS-00A
3.6-8 ..... Revision UMSS-00A
3.7-1 ..... Revision 1
3.7-2 ..... Revision 1
3.7-3 ..... Revision 1
3.8-1 ..... Revision 1
3.8-2 ..... Revision 1
3.8-3 ..... Revision 1
3.8-4 ..... Revision 1
3.8-5 ..... Revision 1
3.8-6 ..... Revision 1
3.8-7 ..... Revision 1
3.8-8 ..... Revision 1
3.8-9 ..... Revision 1
3.8-10 ..... Revision 1
3.8-11 ..... Revision 1

Chapter 4

4-i ..... Revision UMSS-00C
4-ii ..... Revision UMSS-99D
4-iii ..... Revision UMSS-99D
4-iv ..... Revision UMSS-00C
4-v ..... Revision UMSS-99D
4-vi ..... Revision UMSS-00C
4-vii ..... Revision UMSS-99D
4.1-1 ..... Revision 1
4.1-2 ..... Revision 1
4.1-3 ..... Revision 1
4.1-4 ..... Revision 1
4.1-5 ..... Revision 1
4.1-6 ..... Revision UMSS-00A
4.1-7 ..... Revision 1
4.1-8 ..... Revision 1
4.2-1 ..... Revision 1
4.2-2 ..... Revision 1
4.2-3 ..... Revision UMSS-00A
4.2-4 ..... Revision 1
4.2-5 ..... Revision 1
4.2-6 ..... Revision 1
4.2-7 ..... Revision 1
4.3-1 ..... Revision 1
4.4-1 ..... Revision 1
4.4.1-1 ..... Revision 1
4.4.1-2 ..... Revision 1

List of Effective Pages (continued)

4.4.1-3 ..... Revision 1
4.4.1-4 ..... Revision 1
4.4.1-5 ..... Revision 1
4.4.1-6 ..... Revision 1
4.4.1-7 ..... Revision 1
4.4.1-8 ..... Revision 1
4.4.1-9 ..... Revision 1
4.4.1-10 ..... Revision 1
4.4.1-11 ..... Revision 1
4.4.1-12 ..... Revision 1
4.4.1-13 ..... Revision 1
4.4.1-14 ..... Revision 1
4.4.1-15 ..... Revision 1
4.4.1-16 ..... Revision 1
4.4.1-17 ..... Revision 1
4.4.1-18 ..... Revision 1
4.4.1-19 ..... Revision 1
4.4.1-20 ..... Revision 1
4.4.1-21 ..... Revision 1
4.4.1-22 ..... Revision 1
4.4.1-23 ..... Revision 1
4.4.1-24 ..... Revision 1
4.4.1-25 ..... Revision 1
4.4.1-26 ..... Revision 1
4.4.1-27 ..... Revision 1
4.4.1-28 ..... Revision 1
4.4.1-29 ..... Revision 1
4.4.1-30 ..... Revision 1
4.4.1-31 ..... Revision 1
4.4.1-32 ..... Revision 1
4.4.1-33 ..... Revision 1
4.4.1-34 ..... Revision 1
4.4.1-35 ..... Revision 1
4.4.1-36 ..... Revision 1
4.4.1-37 ..... Revision 1
4.4.1-38 ..... Revision 1
4.4.1-39 ..... Revision 1
4.4.1-40 ..... Revision 1
4.4.1-41 ..... Revision 1
4.4.1-42 ..... Revision 1
4.4.1-43 ..... Revision 1
4.4.1-44 ..... Revision 1
4.4.1-45 ..... Revision 1
4.4.1-46 ..... Revision 1
4.4.1-47 ..... Revision 1
4.4.1-48 ..... Revision 1
4.4.1-49 ..... Revision 1
4.4.1-50 ..... Revision 1
4.4.1-51 ..... Revision 1
4.4.2-1 ..... Revision 1
4.4.3-1 ..... Revision UMSS-00C
4.4.3-2 ..... Revision UMSS-00D
4.4.3-3 ..... Revision UMSS-00C
4.4.3-4 ..... Revision UMSS-00C
4.4.3-5 ..... Revision UMSS-00C
4.4.3-6 ..... Revision UMSS-00C
4.4.3-7 ..... Revision UMSS-00C
4.4.3-8 ..... Revision UMSS-00C
4.4.3-9 ..... Revision UMSS-00C
4.4.3-10 ..... Revision UMSS-00C
4.4.3-11 ..... Revision UMSS-00C
4.4.3-12 ..... Revision UMSS-00C
4.4.4-1 ..... Revision 1
4.4.5-1 ..... Revision 1
4.4.5-2 ..... Revision 1
4.4.5-3 ..... Revision 1
4.4.5-4 ..... Revision 1
4.4.5-5 ..... Revision 1
4.4.5-6 ..... Revision 1
4.4.6-1 ..... Revision 1

List of Effective Pages (continued)

4.4.7-1 ..... Revision 1
4.4.7-2 ..... Revision 1
4.4.7-3 ..... Revision 1
4.4.7-4 ..... Revision 1
4.4.7-5 ..... Revision 1
4.4.7-6 ..... Revision 1
4.4.7-7 ..... Revision 1
4.4.7-8 ..... Revision 1
4.4.7-9 ..... Revision 1
4.4.7-10 ..... Revision 1
4.4.7-11 ..... Revision 1
4.4.8-1 ..... Revision 1
4.5-1 ..... Revision UMSS-00C
4.5-2 ..... Revision UMSS-00C
4.5-3 ..... Revision UMSS-99D
4.5-4 ..... Revision UMSS-99D
4.5-5 ..... Revision UMSS-00C
4.5-6 ..... Revision UMSS-00C
4.5-7 ..... Revision UMSS-99D
4.5-8 ..... Revision UMSS-00C
4.5-9 ..... Revision UMSS-00C
4.5-10 ..... Revision UMSS-00C
4.5-11 ..... Revision UMSS-99D
4.5-12 ..... Revision UMSS-99D
4.5-13 ..... Revision UMSS-99D
4.5-14 ..... Revision UMSS-00A
4.5-15 ..... Revision UMSS-00D
4.5-16 ..... Revision UMSS-00D
4.5-17 ..... Revision UMSS-00B
4.5-18 ..... Revision UMSS-00B
4.5-19 ..... Revision UMSS-00B
4.5-20 ..... Revision UMSS-99D
4.5-21 ..... Revision UMSS-00A
4.5-22 ..... Revision UMSS-99D
4.5-23 ..... Revision UMSS-00C
4.6-1 ..... Revision 1
4.6-2 ..... Revision 1
4.6-3 ..... Revision 1
4.6-4 ..... Revision UMSS-00A

Chapter 5

5-i ..... Revision 1
5-ii ..... Revision UMSS-99D
5-iii ..... Revision 1
5-iv ..... Revision 1
5-v ..... Revision UMSS-99D
5-vi ..... Revision 1
5-vii ..... Revision UMSS-99D
5-viii ..... Revision UMSS-99D
5.1-1 ..... Revision 1
5.1-2 ..... Revision 1
5.1-3 ..... Revision UMSS-99D
5.1-4 ..... Revision UMSS-99D
5.1-5 ..... Revision 1
5.1-6 ..... Revision 1
5.1-7 ..... Revision 1
5.1-8 ..... Revision 1
5.1-9 ..... Revision 1
5.1-10 ..... Revision 1
5.1-11 ..... Revision 1
5.2-1 ..... Revision 1
5.2-2 ..... Revision 1
5.2-3 ..... Revision 1
5.2-4 ..... Revision 1
5.2-5 ..... Revision 1
5.2-6 ..... Revision 1
5.2-7 ..... Revision 1
5.2-8 ..... Revision 1
5.2-9 ..... Revision 1
5.2-10 ..... Revision 1

List of Effective Pages (continued)

5.2-11 ..... Revision 1
5.2-12 ..... Revision 1
5.2-13 ..... Revision 1
5.2-14 ..... Revision 1
5.2-15 ..... Revision 1
5.2-16 ..... Revision 1
5.2-17 ..... Revision 1
5.2-18 ..... Revision 1
5.2-19 ..... Revision 1
5.2-20 ..... Revision 1
5.2-21 ..... Revision 1
5.2-22 ..... Revision 1
5.2-23 ..... Revision 1
5.2-24 ..... Revision 1
5.2-25 ..... Revision 1
5.2-26 ..... Revision 1
5.2-27 ..... Revision 1
5.2-28 ..... Revision 1
5.2-29 ..... Revision 1
5.2-30 ..... Revision 1
5.2-31 ..... Revision 1
5.3-1 ..... Revision 1
5.3-2 ..... Revision 1
5.3-3 ..... Revision 1
5.3-4 ..... Revision 1
5.3-5 ..... Revision 1
5.3-6 ..... Revision 1
5.3-7 ..... Revision 1
5.3-8 ..... Revision 1
5.3-9 ..... Revision 1
5.3-10 ..... Revision 1
5.3-11 ..... Revision 1
5.3-12 ..... Revision 1
5.3-13 ..... Revision 1
5.3-14 ..... Revision 1
5.3-15 ..... Revision 1
5.3-16 ..... Revision 1
5.3-17 ..... Revision 1
5.3-18 ..... Revision 1
5.3-19 ..... Revision 1
5.3-20 ..... Revision 1
5.3-21 ..... Revision 1
5.3-22 ..... Revision 1
5.3-23 ..... Revision 1
5.4-1 ..... Revision 1
5.4-2 ..... Revision 1
5.4-3 ..... Revision 1
5.4-4 ..... Revision 1
5.4-5 ..... Revision 1
5.4-6 ..... Revision 1
5.4-7 ..... Revision 1
5.4-8 ..... Revision 1
5.4-9 ..... Revision 1
5.4-10 ..... Revision 1
5.4-11 ..... Revision 1
5.4-12 ..... Revision 1
5.4-13 ..... Revision 1
5.4-14 ..... Revision 1
5.4-15 ..... Revision 1
5.4-16 ..... Revision 1
5.4-17 ..... Revision 1
5.4-18 ..... Revision 1
5.4-19 ..... Revision 1
5.4-20 ..... Revision 1
5.4-21 ..... Revision 1
5.4-22 ..... Revision 1
5.4-23 ..... Revision 1
5.4-24 ..... Revision 1
5.5-1 ..... Revision 1
5.5-2 ..... Revision 1

List of Effective Pages (continued)

5.5-3 ..... Revision 1
5.5-4 ..... Revision 1
5.5-5 ..... Revision 1
5.5-6 ..... Revision 1
5.5-7 ..... Revision 1
5.5-8 ..... Revision 1
5.5-9 ..... Revision 1
5.5-10 ..... Revision 1
5.6-1 ..... Revision UMSS-99D
5.6.1-1 ..... Revision UMSS-00A
5.6.1-2 ..... Revision UMSS-99D
5.6.1-3 ..... Revision UMSS-99D
5.6.1-4 ..... Revision UMSS-99D
5.6.1-5 ..... Revision UMSS-99D
5.6.1-6 ..... Revision UMSS-00A
5.6.1-7 ..... Revision UMSS-99D
5.6.1-8 ..... Revision UMSS-99D
5.6.1-9 ..... Revision UMSS-99D
5.6.1-10 ..... Revision UMSS-99D
5.6.1-11 ..... Revision UMSS-99D
5.6.1-12 ..... Revision UMSS-00B
5.6.1-13 ..... Revision UMSS-99D
5.6.1-14 ..... Revision UMSS-99D
5.6.1-15 ..... Revision UMSS-99D
5.6.1-16 ..... Revision UMSS-99D
5.6.1-17 ..... Revision UMSS-99D
5.6.1-18 ..... Revision UMSS-99D
5.6.1-19 ..... Revision UMSS-99D
5.6.1-20 ..... Revision UMSS-99D
5.6.1-21 ..... Revision UMSS-00C
5.6.1-22 ..... Revision UMSS-00C
5.6.1-23 ..... Revision UMSS-99D
5.6.1-24 ..... Revision UMSS-00C
5.6.1-25 ..... Revision UMSS-99D
5.6.1-26 ..... Revision UMSS-99D
5.7-1 ..... Revision 1
5.7-2 ..... Revision 1
5.7-3 ..... Revision 1

Chapter 6

6-i ..... Revision 1
6-ii ..... Revision UMSS-00B
6-iii ..... Revision UMSS-00C
6-iv ..... Revision 1
6-v ..... Revision 1
6-vi ..... Revision UMSS-00C
6.1-1 ..... Revision 1
6.1-2 ..... Revision 1
6.1-3 ..... Revision 1
6.2-1 ..... Revision 1
6.2-2 ..... Revision 1
6.2-3 ..... Revision 1
6.3-1 ..... Revision 1
6.3-2 ..... Revision 1
6.3-3 ..... Revision 1
6.3-4 ..... Revision 1
6.3-5 ..... Revision 1
6.3-6 ..... Revision 1
6.3-7 ..... Revision 1
6.3-8 ..... Revision 1
6.3-9 ..... Revision 1
6.3-10 ..... Revision 1
6.3-11 ..... Revision 1
6.3-12 ..... Revision 1
6.3-13 ..... Revision 1
6.3-14 ..... Revision 1
6.4-1 ..... Revision 1
6.4-2 ..... Revision 1
6.4-3 ..... Revision 1
6.4-4 ..... Revision 1

List of Effective Pages (continued)

6.4-5 ..... Revision 1
6.4-6 ..... Revision 1
6.4-7 ..... Revision 1
6.4-8 ..... Revision 1
6.4-9 ..... Revision 1
6.4-10 ..... Revision 1
6.4-11 ..... Revision 1
6.4-12 ..... Revision 1
6.4-13 ..... Revision 1
6.4-14 ..... Revision 1
6.4-15 ..... Revision 1
6.4-16 ..... Revision 1
6.4-17 ..... Revision 1
6.4-18 ..... Revision 1
6.4-19 ..... Revision 1
6.4-20 ..... Revision 1
6.4-21 ..... Revision 1
6.4-22 ..... Revision 1
6.4-23 ..... Revision 1
6.4-24 ..... Revision 1
6.4-25 ..... Revision 1
6.4-26 ..... Revision 1
6.4-27 ..... Revision 1
6.4-28 ..... Revision 1
6.4-29 ..... Revision 1
6.4-30 ..... Revision 1
6.4-31 ..... Revision 1
6.4-32 ..... Revision 1
6.4-33 ..... Revision 1
6.4-34 ..... Revision 1
6.5-1 ..... Revision 1
6.5-2 ..... Revision 1
6.5-3 ..... Revision 1
6.5-4 ..... Revision 1
6.5-5 ..... Revision 1
6.5-6 ..... Revision 1
6.5-7 ..... Revision 1
6.5-8 ..... Revision 1
6.5-9 ..... Revision 1
6.5-10 ..... Revision 1
6.5-11 ..... Revision 1
6.5-12 ..... Revision 1
6.5-13 ..... Revision 1
6.5-14 ..... Revision 1
6.5-15 ..... Revision 1
6.5-16 ..... Revision 1
6.5-17 ..... Revision 1
6.5-18 ..... Revision 1
6.5-19 ..... Revision 1
6.5-20 ..... Revision 1
6.5-21 ..... Revision 1
6.5-22 ..... Revision 1
6.5-23 ..... Revision 1
6.5-24 ..... Revision 1
6.5-25 ..... Revision 1
6.6-1 ..... Revision UMSS-99D
6.6.1-1 ..... Revision UMSS-00C
6.6.1-2 ..... Revision UMSS-99D
6.6.1-3 ..... Revision UMSS-00C
6.6.1-4 ..... Revision UMSS-99D
6.6.1-5 ..... Revision UMSS-00C
6.6.1-6 ..... Revision UMSS-00C
6.6.1-7 ..... Revision UMSS-00C
6.6.1-8 ..... Revision UMSS-00C
6.6.1-9 ..... Revision UMSS-00C
6.6.1-10 ..... Revision UMSS-00C
6.6.1-11 ..... Revision UMSS-00C
6.6.1-12 ..... Revision UMSS-00C
6.6.1-13 ..... Revision UMSS-00C
6.6.1-14 ..... Revision UMSS-00C

List of Effective Pages (continued)

6.6.1-15 ..... Revision UMSS-00C
6.6.1-16 ..... Revision UMSS-00C
6.6.1-17 ..... Revision UMSS-00C
6.6.1-18 ..... Revision UMSS-00C
6.6.1-19 ..... Revision UMSS-00C
6.6.1-20 ..... Revision UMSS-00C
6.6.1-21 ..... Revision UMSS-00C
6.7-1 ..... Revision 1
6.7-2 ..... Revision 1
6.8-1 ..... Revision 1
6.8-2 ..... Revision 1
6.8-3 ..... Revision 1
6.8-4 ..... Revision 1
6.8-5 ..... Revision 1
6.8-6 ..... Revision 1
6.8-7 ..... Revision 1
6.8-8 ..... Revision 1
6.8-9 ..... Revision 1
6.8-10 ..... Revision 1
6.8-11 ..... Revision 1
6.8-12 ..... Revision 1
6.8-13 ..... Revision 1
6.8-14 ..... Revision 1
6.8-15 ..... Revision 1
6.8-16 ..... Revision 1
6.8-17 ..... Revision 1
6.8-18 ..... Revision 1
6.8-19 ..... Revision 1
6.8-20 ..... Revision 1
6.8-21 ..... Revision 1
6.8-22 ..... Revision 1
6.8-23 ..... Revision 1
6.8-24 ..... Revision 1
6.8-25 ..... Revision 1
6.8-26 ..... Revision 1
6.8-27 ..... Revision 1
6.8-28 ..... Revision 1
6.8-29 ..... Revision 1
6.8-30 ..... Revision 1
6.8-31 ..... Revision 1
6.8-32 ..... Revision 1
6.8-33 ..... Revision 1
6.8-34 ..... Revision 1
6.8-35 ..... Revision 1
6.8-36 ..... Revision 1
6.8-37 ..... Revision 1
6.8-38 ..... Revision 1
6.8-39 ..... Revision 1
6.8-40 ..... Revision 1
6.8-41 ..... Revision 1
6.8-42 ..... Revision 1
6.8-43 ..... Revision 1
6.8-44 ..... Revision 1
6.8-45 ..... Revision 1
6.8-46 ..... Revision 1
6.8-47 ..... Revision 1
6.8-48 ..... Revision 1
6.8-49 ..... Revision 1
6.8-50 ..... Revision 1
6.8-51 ..... Revision 1

Chapter 7

7-i ..... Revision UMSS-99D
7-ii ..... Revision 1
7.1-1 ..... Revision 1
7.1-2 ..... Revision 1
7.1-3 ..... Revision 1
7.1-4 ..... Revision 1
7.1-5 ..... Revision 1
7.1-6 ..... Revision 1

List of Effective Pages (continued)

7.1-7 ..... Revision 1
7.1-8 ..... Revision 1
7.1-9 ..... Revision 1
7.1-10 ..... Revision 1
7.1-11 ..... Revision 1
7.2-1 ..... Revision 1
7.2-2 ..... Revision 1
7.3-1 ..... Revision 1
7.4-1 ..... Revision UMSS-00D
7.5-1 ..... Revision 1

Chapter 8

8-i ..... Revision UMSS-00A
8-ii ..... Revision UMSS-00A
8-1 ..... Revision UMSS-99D
8-2 ..... Revision UMSS-99D
8.1-1 ..... Revision UMSS-00A
8.1.1-1 ..... Revision UMSS-00A
8.1.1-2 ..... Revision UMSS-00A
8.1.1-3 ..... Revision UMSS-99D
8.1.1-4 ..... Revision UMSS-99D
8.1.1-5 ..... Revision UMSS-99D
8.1.1-6 ..... Revision UMSS-99D
8.1.1-7 ..... Revision UMSS-99D
8.1.1-8 ..... Revision UMSS-99D
8.1.2-1 ..... Revision UMSS-99D
8.1.2-2 ..... Revision UMSS-99D
8.1.3-1 ..... Revision UMSS-99D
8.1.3-2 ..... Revision UMSS-99D
8.2-1 ..... Revision UMSS-99D
8.2.2 ..... Revision 1
8.3-1 ..... Revision 1
8.3-2 ..... Revision 1
8.3-3 ..... Revision 1
8.3-4 ..... Revision 1
8.3-5 ..... Revision 1
8.4-1 ..... Revision 1

Chapter 9

9-i ..... Revision UMSS-00A
9.1-1 ..... Revision 1
9.1-2 ..... Revision 1
9.1-3 ..... Revision 1
9.1-4 ..... Revision 1
9.1-5 ..... Revision 1
9.1-6 ..... Revision 1
9.1-7 ..... Revision 1
9.1-8 ..... Revision 1
9.1-9 ..... Revision 1
9.1-10 ..... Revision 1
9.2-1 ..... Revision UMSS-00A
9.2-2 ..... Revision UMSS-00A
9.3-1 ..... Revision 1

Chapter 10

10-i ..... Revision UMSS-99D
10-ii ..... Revision 1
10.1-1 ..... Revision 1
10.1-2 ..... Revision 1
10.2-1 ..... Revision 1
10.2-2 ..... Revision 1
10.3-1 ..... Revision 1
10.3-2 ..... Revision UMSS-00C
10.3-3 ..... Revision UMSS-00C
10.3-4 ..... Revision 1
10.3-5 ..... Revision 1
10.3-6 ..... Revision 1
10.3-7 ..... Revision 1
10.3-8 ..... Revision UMSS-00C
10.3-9 ..... Revision UMSS-00C

List of Effective Pages (continued)

10.4-1 ..... Revision 1
10.4-2 ..... Revision 1
10.4-3 ..... Revision 1
10.4-4 ..... Revision 1
10.4-5 ..... Revision 1
10.5-1 ..... Revision UMSS-99D
10.6-1 ..... Revision 1

Chapter 11

11-i ..... Revision 1
11-ii ..... Revision UMSS-99D
11-iii ..... Revision UMSS-99D
11-iv ..... Revision UMSS-00D
11-v ..... Revision 1
11-vi ..... Revision UMSS-00D
11-vii ..... Revision 1
11-viii ..... Revision 1
11-ix ..... Revision UMSS-99D
11-x ..... Revision UMSS-00A
11-1 ..... Revision 1
11.1.1-1 ..... Revision 1
11.1.1-2 ..... Revision 1
11.1.1-3 ..... Revision 1
11.1.1-4 ..... Revision 1
11.1.1-5 ..... Revision 1
11.1.1-6 ..... Revision 1
11.1.2-1 ..... Revision 1
11.1.2-2 ..... Revision 1
11.1.2-3 ..... Revision 1
11.1.3-1 ..... Revision 1
11.1.3-2 ..... Revision 1
11.1.3-3 ..... Revision 1
11.1.3-4 ..... Revision 1
11.1.3-5 ..... Revision 1
11.1.3-6 ..... Revision 1
11.1.3-7 ..... Revision 1
11.1.3-8 ..... Revision 1
11.1.3-9 ..... Revision 1
11.1.3-10 ..... Revision 1
11.1.3-11 ..... Revision 1
11.1.3-12 ..... Revision 1
11.1.3-13 ..... Revision 1
11.1.3-14 ..... Revision 1
11.1.3-15 ..... Revision 1
11.1.3-16 ..... Revision 1
11.1.4-1 ..... Revision UMSS-00D
11.1.4-2 ..... Revision 1
11.1.5-1 ..... Revision 1
11.1.5-2 ..... Revision 1
11.1.6-1 ..... Revision UMSS-00B
11.2-1 ..... Revision UMSS-00B
11.2.1-1 ..... Revision 1
11.2.1-2 ..... Revision 1
11.2.1-3 ..... Revision 1
11.2.1-4 ..... Revision 1
11.2.1-5 ..... Revision 1
11.2.1-6 ..... Revision 1
11.2.1-7 ..... Revision 1
11.2.1-8 ..... Revision 1
11.2.2-1 ..... Revision 1
11.2.3-1 ..... Revision 1
11.2.3-2 ..... Revision 1
11.2.4-1 ..... Revision 1
11.2.4-2 ..... Revision 1
11.2.4-3 ..... Revision 1
11.2.4-4 ..... Revision 1
11.2.4-5 ..... Revision 1
11.2.4-6 ..... Revision 1
11.2.4-7 ..... Revision 1
11.2.4-8 ..... Revision 1

List of Effective Pages (continued)

11.2.4-9 ..... Revision 1
11.2.4-10 ..... Revision 1
11.2.4-11 ..... Revision 1
11.2.4-12 ..... Revision 1
11.2.4-13 ..... Revision 1
11.2.4-14 ..... Revision 1
11.2.4-15 ..... Revision 1
11.2.4-16 ..... Revision 1
11.2.4-17 ..... Revision 1
11.2.4-18 ..... Revision 1
11.2.4-19 ..... Revision 1
11.2.4-20 ..... Revision 1
11.2.4-21 ..... Revision 1
11.2.4-22 ..... Revision 1
11.2.4-23 ..... Revision UMSS-00C
11.2.4-24 ..... Revision 1
11.2.4-25 ..... Revision UMSS-00C
11.2.4-26 ..... Revision 1
11.2.4-27 ..... Revision 1
11.2.4-28 ..... Revision 1
11.2.4-29 ..... Revision 1
11.2.4-30 ..... Revision 1
11.2.5-1 ..... Revision 1
11.2.6-1 ..... Revision 1
11.2.6-2 ..... Revision 1
11.2.6-3 ..... Revision 1
11.2.6-4 ..... Revision 1
11.2.6-5 ..... Revision 1
11.2.7-1 ..... Revision 1
11.2.7-2 ..... Revision 1
11.2.8-1 ..... Revision 1
11.2.8-2 ..... Revision 1
11.2.8-3 ..... Revision 1
11.2.8-4 ..... Revision 1
11.2.8-5 ..... Revision 1
11.2.8-6 ..... Revision 1
11.2.8-7 ..... Revision 1
11.2.8-8 ..... Revision 1
11.2.9-1 ..... Revision 1
11.2.9-2 ..... Revision 1
11.2.9-3 ..... Revision 1
11.2.9-4 ..... Revision 1
11.2.9-5 ..... Revision 1
11.2.9-6 ..... Revision 1
11.2.9-7 ..... Revision 1
11.2.10-1 ..... Revision 1
11.2.10-2 ..... Revision 1
11.2.10-3 ..... Revision 1
11.2.10-4 ..... Revision 1
11.2.11-1 ..... Revision 1
11.2.11-2 ..... Revision 1
11.2.11-3 ..... Revision 1
11.2.11-4 ..... Revision 1
11.2.11-5 ..... Revision 1
11.2.11-6 ..... Revision 1
11.2.11-7 ..... Revision 1
11.2.11-8 ..... Revision 1
11.2.11-9 ..... Revision 1
11.2.11-10 ..... Revision 1
11.2.11-11 ..... Revision 1
11.2.11-12 ..... Revision 1
11.2.11-13 ..... Revision 1
11.2.11-14 ..... Revision 1
11.2.12-1 ..... Revision 1
11.2.12-2 ..... Revision 1
11.2.12-3 ..... Revision 1
11.2.12-4 ..... Revision 1
11.2.12-5 ..... Revision 1
11.2.12-6 ..... Revision 1
11.2.12-7 ..... Revision 1

List of Effective Pages (continued)

11.2.12-8 ..... Revision 1
11.2.12-9 ..... Revision 1
11.2.12-10 ..... Revision 1
11.2.12-11 ..... Revision 1
11.2.12-12 ..... Revision 1
11.2.12-13 ..... Revision 1
11.2.12-14 ..... Revision 1
11.2.12-15 ..... Revision 1
11.2.12-16 ..... Revision 1
11.2.12-17 ..... Revision 1
11.2.12-18 ..... Revision 1
11.2.12-19 ..... Revision 1
11.2.12-20 ..... Revision 1
11.2.12-21 ..... Revision 1
11.2.12-22 ..... Revision 1
11.2.12-23 ..... Revision 1
11.2.12-24 ..... Revision 1
11.2.12-25 ..... Revision 1
11.2.12-26 ..... Revision 1
11.2.12-27 ..... Revision 1
11.2.12-28 ..... Revision 1
11.2.12-29 ..... Revision 1
11.2.12-30 ..... Revision 1
11.2.12-31 ..... Revision 1
11.2.12-32 ..... Revision 1
11.2.12-33 ..... Revision 1
11.2.12-34 ..... Revision 1
11.2.12-35 ..... Revision 1
11.2.12-36 ..... Revision 1
11.2.12-37 ..... Revision 1
11.2.12-38 ..... Revision 1
11.2.12-39 ..... Revision 1
11.2.12-40 ..... Revision 1
11.2.12-41 ..... Revision 1
11.2.12-42 ..... Revision 1
11.2.12-43 ..... Revision 1
11.2.12-44 ..... Revision 1
11.2.12-45 ..... Revision 1
11.2.12-46 ..... Revision 1
11.2.12-47 ..... Revision 1
11.2.12-48 ..... Revision 1
11.2.12-49 ..... Revision 1
11.2.12-50 ..... Revision 1
11.2.12-51 ..... Revision 1
11.2.12-52 ..... Revision 1
11.2.12-53 ..... Revision 1
11.2.12-54 ..... Revision 1
11.2.12-55 ..... Revision 1
11.2.12-56 ..... Revision 1
11.2.12-57 ..... Revision 1
11.2.12-58 ..... Revision 1
11.2.12-59 ..... Revision 1
11.2.12-60 ..... Revision 1
11.2.12-61 ..... Revision 1
11.2.12-62 ..... Revision 1
11.2.12-63 ..... Revision 1
11.2.12-64 ..... Revision 1
11.2.12-65 ..... Revision 1
11.2.12-66 ..... Revision 1
11.2.12-67 ..... Revision 1
11.2.12-68 ..... Revision 1
11.2.12-69 ..... Revision 1
11.2.13-1 ..... Revision 1
11.2.13-2 ..... Revision 1
11.2.13-3 ..... Revision 1
11.2.14-1 ..... Revision 1
11.2.14-2 ..... Revision 1
11.2.15-1 ..... Revision UMSS-00B
11.2.15-2 ..... Revision UMSS-99D
11.2.15-3 ..... Revision UMSS-00A

List of Effective Pages (continued)

11.2.15-4 ..... Revision UMSS-00D
11.2.15-5 ..... Revision UMSS-00D
11.2.15-6 ..... Revision UMSS-00D
11.2.15-7 ..... Revision UMSS-00D
11.2.15-8 ..... Revision UMSS-00A
11.2.15-9 ..... Revision UMSS-00A
11.2.15-10 ..... Revision UMSS-00A
11.2.15-11 ..... Revision UMSS-00A
11.2.15-12 ..... Revision UMSS-00A
11.2.15-13 ..... Revision UMSS-00A
11.2.15-14 ..... Revision UMSS-00A
11.2.15-15 ..... Revision UMSS-00A
11.2.15-16 ..... Revision UMSS-00A
11.2.15-17 ..... Revision UMSS-00A
11.2.15-18 ..... Revision UMSS-00A
11.2.15-19 ..... Revision UMSS-00A
11.2.15-20 ..... Revision UMSS-00A
11.2.15-21 ..... Revision UMSS-00A
11.2.15-22 ..... Revision UMSS-00B
11.2.15-23 ..... Revision UMSS-00C
11.2.15-24 ..... Revision UMSS-00C
11.2.15-25 ..... Revision UMSS-00D
11.2.15-26 ..... Revision UMSS-00B
11.2.15-27 ..... Revision UMSS-00C
11.2.16-1 ..... Revision UMSS-00D
11.2.16-2 ..... Revision UMSS-00D
11.2.16-3 ..... Revision UMSS-00D
11.2.16-4 ..... Revision UMSS-00D
11.2.16-5 ..... Revision UMSS-00D
11.2.16-6 ..... Revision UMSS-00D
11.2.16-7 ..... Revision UMSS-00D
11.3-1 ..... Revision 1
11.3-2 ..... Revision 1
11.3-3 ..... Revision 1
11.3-4 ..... Revision UMSS-00D

Chapter 12

12-i ..... Revision UMSS-99D
12-ii ..... Revision UMSS-99D
12-1 ..... Revision UMSS-99D
12-2 ..... Revision UMSS-00A
12-3 ..... Revision UMSS-00B
12-4 ..... Revision UMSS-00C
12A-1 ..... Revision 1
12A-2 ..... Revision UMSS-00C
12A-3 ..... Revision UMSS-00D
12A1-1 ..... Revision UMSS-00B
12A1-2 ..... Revision UMSS-00B
12A1-3 ..... Revision UMSS-00A
12A1-4 ..... Revision UMSS-00B
12A1-5 ..... Revision UMSS-00D
12A1-6 ..... Revision UMSS-00A
12A1-7 ..... Revision UMSS-99D
12A1-8 ..... Revision UMSS-99D
12A1-9 ..... Revision UMSS-99D
12A1-10 ..... Revision UMSS-99D
12A1-11 ..... Revision UMSS-99D
12A1-12 ..... Revision UMSS-99D
12A1-13 ..... Revision UMSS-99D
12A1-14 ..... Revision UMSS-99D
12A1-15 ..... Revision UMSS-99D
12A1-16 ..... Revision UMSS-99D
12A1-17 ..... Revision UMSS-99D
12A2-1 ..... Revision 1
12A3-1 ..... Revision 1
12A3-2 ..... Revision 1
12A3-3 ..... Revision 1
12A3-4 ..... Revision UMSS-00C
12A3-5 ..... Revision UMSS-00C
12A3-6 ..... Revision UMSS-00C

List of Effective Pages (continued)

12A3-7 ..... Revision UMSS-00C
12A3-8 ..... Revision UMSS-00C
12A3-9 ..... Revision UMSS-00C
12A3-10 ..... Revision UMSS-00C
12A3-11 ..... Revision UMSS-00A
12A3-12 ..... Revision UMSS-00A
12A3-13 ..... Revision UMSS-00C
12A3-14 ..... Revision UMSS-00C
12A3-15 ..... Revision UMSS-00C
12A3-16 ..... Revision UMSS-00C
12A3-17 ..... Revision 1
12A3-18 ..... Revision 1
12A3-19 ..... Revision 1
12A3-20 ..... Revision UMSS-00C
12A3-21 ..... Revision 1
12A3-22 ..... Revision 1
12A3-23 ..... Revision UMSS-00C
12A3-24 ..... Revision 1
12A3-25 ..... Revision UMSS-00C
12A4-1 ..... Revision 1
12A5-1 ..... Revision UMSS-00C
12A5-2 ..... Revision UMSS-00C
12A5-3 ..... Revision UMSS-00D
12A5-4 ..... Revision UMSS-00C
12A5-5 ..... Revision UMSS-00D
12A5-6 ..... Revision UMSS-00D
12B-1 ..... Revision 1
12B-2 ..... Revision UMSS-00C
12B-3 ..... Revision UMSS-00C
12B1-1 ..... Revision UMSS-00A
12B2-1 ..... Revision UMSS-00C
12B2-2 ..... Revision UMSS-00C
12B2-3 ..... Revision UMSS-00C
12B2-4 ..... Revision UMSS-00C
12B2-5 ..... Revision UMSS-99D
12B2-6 ..... Revision UMSS-00C
12B2-7 ..... Revision UMSS-99D
12B2-8 ..... Revision UMSS-99D
12B2-9 ..... Revision UMSS-00C
12B2-10 ..... Revision UMSS-00C
12B2-11 ..... Revision UMSS-99D
12B2-12 ..... Revision UMSS-99D
12B2-13 ..... Revision UMSS-00C
12B2-14 ..... Revision UMSS-00C
12B2-15 ..... Revision UMSS-00C
12B2-16 ..... Revision UMSS-00C
12B2-17 ..... Revision UMSS-00C
12B2-18 ..... Revision UMSS-00C
12B3-1 ..... Revision UMSS-99D
12B3-2 ..... Revision 1
12B3-3 ..... Revision 1
12B3-4 ..... Revision UMSS-99D
12B3-5 ..... Revision UMSS-99D
12B3-6 ..... Revision 1
12B3-7 ..... Revision UMSS-99D
12B3-8 ..... Revision UMSS-00C
12B3-9 ..... Revision UMSS-00C
12B3-10 ..... Revision UMSS-00C
12B3-11 ..... Revision UMSS-00C
12B3-12 ..... Revision UMSS-00C
12B3-13 ..... Revision UMSS-00C
12C-1 ..... Revision 1
12C-2 ..... Revision UMSS-00C
12C1-1 ..... Revision 1
12C2-1 ..... Revision UMSS-00C
12C2-2 ..... Revision 1
12C3-1 ..... Revision 1
12C3-2 ..... Revision 1
12C3-3 ..... Revision 1
12C3-4 ..... Revision 1

List of Effective Pages (continued)

12C3-5 ..... Revision 1
12C3-6 ..... Revision 1
12C3-7 ..... Revision 1
12C3-8 ..... Revision 1
12C3-9 ..... Revision UMSS-00C
12C3-10 ..... Revision UMSS-00C
12C3-11 ..... Revision UMSS-00C
12C3-12 ..... Revision UMSS-00C
12C3-13 ..... Revision 1
12C3-14 ..... Revision 1
12C3-15 ..... Revision 1
12C3-16 ..... Revision 1
12C3-17 ..... Revision 1
12C3-18 ..... Revision 1
12C3-19 ..... Revision 1
12C3-20 ..... Revision UMSS-00C
12C3-21 ..... Revision UMSS-00C
12C3-22 ..... Revision 1
12C3-23 ..... Revision 1
12C3-24 ..... Revision 1
12C3-25 ..... Revision 1
12C3-26 ..... Revision 1
12C3-27 ..... Revision UMSS-00A
12C3-28 ..... Revision UMSS-00A
12C3-29 ..... Revision UMSS-00A
12C3-30 ..... Revision UMSS-00C
12C3-31 ..... Revision UMSS-00C
12C3-32 ..... Revision UMSS-00C
12C3-33 ..... Revision UMSS-00C
12C3-34 ..... Revision UMSS-00C
12C3-35 ..... Revision UMSS-00C
12C3-36 ..... Revision UMSS-00C
12C3-37 ..... Revision UMSS-99D
12C3-38 ..... Revision 1
12C3-39 ..... Revision 1
12C3-40 ..... Revision 1
12C3-41 ..... Revision 1
12C3-42 ..... Revision 1
12C3-43 ..... Revision 1
12C3-44 ..... Revision 1
12C3-45 ..... Revision UMSS-00C
12C3-46 ..... Revision 1
12C3-47 ..... Revision 1
12C3-48 ..... Revision 1
12C3-49 ..... Revision 1

Chapter 13

13-i ..... Revision 1
13-ii ..... Revision 1
13.1-1 ..... Revision 1
13.1-2 ..... Revision 1
13.2-1 ..... Revision 1
13.2-2 ..... Revision 1
13.2-3 ..... Revision 1
13.2-4 ..... Revision 1
13.2-5 ..... Revision 1
13.2-6 ..... Revision 1
13.2-7 ..... Revision 1
13.2-8 ..... Revision 1
13.3-1 ..... Revision 1

THIS PAGE INTENTIONALLY LEFT BLANK

Master Table of Contents (Continued)

2.3 Safety Protection Systems 2.3-1
2.3.1 General 2.3-1
2.3.2 Protection by Multiple Confinement Barriers and Systems 2.3-2
2.3.2.1 Confinement Barriers and Systems 2.3-2
2.3.2.2 Cask Cooling 2.3-3
2.3.3 Protection by Equipment and Instrumentation Selection 2.3-3
2.3.3.1 Equipment 2.3-4
2.3.3.2 Instrumentation 2.3-5
2.3.4 Nuclear Criticality Safety 2.3-5
2.3.4.1 Control Methods for Prevention of Criticality 2.3-5
2.3.4.2 Error Contingency Criteria 2.3-7
2.3.4.3 Verification Analyses 2.3-7
2.3.5 Radiological Protection 2.3-7
2.3.5.1 Access Control 2.3-7
2.3.5.2 Shielding 2.3-8
2.3.5.3 Ventilation Off-Gas 2.3-8
2.3.5.4 Radiological Alarm Systems 2.3-9
2.3.6 Fire and Explosion Protection 2.3-10
2.3.6.1 Fire Protection 2.3-10
2.3.6.2 Explosion Protection 2.3-10
2.3.7 Ancillary Structures 2.3-10

2.4 Decommissioning Considerations 2.4-1

2.5 References 2.5-1

3.0 STRUCTURAL EVALUATION 3.1.1

3.1 Structural Design 3.1-1
3.1.1 Discussion 3.1-2
3.1.2 Design Criteria 3.1-6

3.2 Weights and Centers of Gravity 3.2-1

Master Table of Contents (Continued)

3.3 Mechanical Properties of Materials 3.3-1
3.3.1 Primary Component Materials 3.3-1
3.3.2 Fracture Toughness Considerations 3.3-14

3.4 General Standards 3.4.1-1
3.4.1 Chemical and Galvanic Reactions 3.4.1-1
3.4.1.1 Component Operating Environment 3.4.1-1
3.4.1.2 Component Material Categories 3.4.1-1
3.4.1.3 General Effects of Identified Reactions 3.4.1-9
3.4.1.4 Adequacy of the Canister Operating Procedures 3.4.1-9
3.4.1.5 Effects of Reaction Products 3.4.1-9
3.4.2 Positive Closure 3.4.2-1
3.4.3 Lifting Devices 3.4.3-1
3.4.3.1 Vertical Concrete Cask Lift Evaluation 3.4.3-5
3.4.3.2 Canister Lift 3.4.3-20
3.4.3.3 Transfer Cask Lift 3.4.3-27
3.4.4 Normal Operating Conditions Analysis 3.4.4-1
3.4.4.1 Canister and Basket Analyses 3.4.4-1
3.4.4.2 Vertical Concrete Cask Analyses 3.4.4-63
3.4.5 Cold 3.4.5-1

3.5 Fuel Rods 3.5-1

3.6 Structural Evaluation of Site Specific Spent Fuel 3.6-1
3.6.1 Structural Evaluation of Maine Yankee Site Specific Spent Fuel for Normal Operating Conditions 3.6-1
3.6.1.1 Maine Yankee Intact Spent Fuel 3.6-1
3.6.1.2 Maine Yankee Damaged Spent Fuel 3.6-2

3.7 References 3.7-1

3.8 Carbon Steel Coatings Technical Data 3.8-1
3.8.1 Carboline 890 ..... 3.8-2
3.8.2 Keeler & Long E-Series Epoxy Enamel 3.8-4
3.8.3 Description of Electroless Nickel Coating 3.8-8

Master Table of Contents (Continued)

11.2.12.3 Analysis of Cask Tip-Over 11.2.12-1
11.2.12.4 Analysis of Canister and Basket for Cask Tip-Over Event 11.2.12-11
11.2.12.5 Corrective Actions 11.2.12-69
11.2.12.6 Radiological Impact 11.2.12-69
11.2.13 Full Blockage of Vertical Concrete Cask Air Inlets and Outlets 11.2.13-1
11.2.13.1 Cause of Full Blockage 11.2.13-1
11.2.13.2 Detection of Full Blockage 11.2.13-1
11.2.13.3 Analysis of Full Blockage 11.2.13-1
11.2.13.4 Corrective Actions 11.2.13-2
11.2.13.5 Radiological Impact 11.2.13-2
11.2.14 Canister Closure Weld Evaluation 11.2.14-1
11.2.15 Accident and Natural Phenomena Events Evaluation for Site Specific Spent Fuel 11.2.15-1
11.2.15.1 Accident and Natural Phenomena Events Evaluation for Maine Yankee Site Specific Spent Fuel 11.2.15-1
11.2.16 Damaged Fuel Assembly Hardware Evaluation 11.2.16-1

11.3 References 11.3-1

12.0 OPERATING CONTROLS AND LIMITS 12-1

12.1 Administrative and Operating Controls and Limits for NAC-UMS® System 12-1

12.2 Administrative and Operating Controls and Limits for SITE SPECIFIC FUEL 12-1
12.2.1 Operating Controls and Limits for Maine Yankee SITE SPECIFIC FUEL 12-2

Appendix 12A Technical Specifications for the NAC-UMS® System 12A-1

Appendix 12B Approved Contents and Design Features for the NAC-UMS® System 12B-1

Appendix 12C Technical Specification Bases for the NAC-UMS® System 12C-1

Master Table of Contents (Continued)

13.0 QUALITY ASSURANCE 13.1-1

13.1 Introduction 13.1-1

13.2 NAC Quality Assurance Program Synopsis 13.2-1
- 13.2.1 Organization 13.2-1
- 13.2.2 Quality Assurance Program 13.2-1
- 13.2.3 Design Control 13.2-2
- 13.2.4 Procurement Document Control 13.2-3
- 13.2.5 Procedures, Instructions, and Drawings 13.2-3
- 13.2.6 Document Control 13.2-3
- 13.2.7 Control of Purchased Items and Services 13.2-4
- 13.2.8 Identification and Control of Material, Parts, and Components 13.2-4
- 13.2.9 Control of Special Processes 13.2-4
- 13.2.10 Inspection 13.2-5
- 13.2.11 Test Control 13.2-5
- 13.2.12 Control of Measuring and Testing Equipment 13.2-5
- 13.2.13 Handling, Storage and Shipping 13.2-6
- 13.2.14 Inspection, Test and Operating Status 13.2-6
- 13.2.15 Control of Nonconforming Items 13.2-6
- 13.2.16 Corrective Action 13.2-7
- 13.2.17 Records 13.2-7
- 13.2.18 Audits 13.2-7

13.3 References 13.3-1

Table 1-1 Terminology

Universal Storage System	The storage component of the Universal MPC System (UMS®) designed by NAC for the storage and transportation of spent nuclear fuel.
Universal Transport Cask	The packaging consisting of a Universal Transport Cask body with a closure lid and energy-absorbing impact limiters. The Universal Transport Cask is used to transport a Transportable Storage Canister containing spent fuel. The cask body provides the primary containment boundary during transport.
Confinement System	The components of the Transportable Storage Canister intended to retain the radioactive material during storage.
Contents	Twenty-four PWR fuel assemblies, or fifty-six BWR fuel assemblies. The fuel assemblies may be configured as Site Specific Fuel. The fuel assemblies are contained in a Transportable Storage Canister.
Standard Fuel	Irradiated fuel assemblies with a burnup less than, or equal to, 45,000 MWD/MTU and having the same configuration as when originally fabricated consisting generally of the end fittings, fuel rods, guide tubes, and integral hardware. For BWR fuel, the channel is considered to be integral hardware. The design basis fuel characteristics and analysis are based on the standard fuel configuration.
Consolidated Fuel	A nonstandard fuel configuration in which the individual intact fuel rods from one or more fuel assemblies are placed in a single container or a lattice structure that is similar to a fuel assembly.
Intact Fuel (Assembly or Rod) (Undamaged Fuel)	A fuel assembly or fuel rod with no fuel rod cladding defects, or with known or suspected fuel rod cladding defects not greater than pinhole leaks or hairline cracks.

Table 1-1 Terminology (Continued)

Damaged Fuel (Failed Fuel)	A fuel assembly or fuel rod with known or suspected cladding defects greater than pinhole leaks or hairline cracks. Damaged Fuel must be placed in a Maine Yankee Fuel Can.
High Burnup Fuel	A fuel assembly having a burnup between 45,000 and 50,000 MWD/MTU, which must be preferentially loaded in periphery positions of the basket. An intact high burnup fuel assembly in which no more than 1% of the fuel rods in the assembly have a peak cladding oxide thickness greater than 80 microns, and in which no more than 3% of the fuel rods in the assembly have a peak oxide layer thickness greater than 70 microns, as determined by measurement and statistical analysis, may be stored as intact fuel. High burnup fuel assemblies not meeting the cladding oxide thickness criteria for intact fuel or that have an oxide layer that has become detached or spalled from the cladding is stored as damaged fuel.
Site Specific Fuel	Spent fuel configurations that are unique to a site or reactor due to the addition of other components or reconfiguration of the fuel assembly at the site. It includes fuel assemblies which hold nonfuel-bearing components, such as control components or instrument and plug thimbles, or which are modified as required by expediency in reactor operations, research and development or testing. Modification may consist of individual fuel rod removal, fuel rod replacement of similar or dissimilar material or enrichment, the installation, removal or replacement of burnable poison rods, or containerizing damaged fuel. Site specific fuel includes irradiated fuel assemblies designed with variable enrichments and/or axial blankets, fuel that is consolidated and fuel that exceeds design basis fuel parameters.

axial spacing between the support disks, are sized to eliminate contact with the canister inner shell due to differential thermal expansion.

The Transportable Storage Canister is designed to facilitate filling with water and subsequent draining. Water fills and drains freely between the basket disks through three separate paths. One path is the gaps that exist between the disks and canister shell. The second path is through the gaps between the fuel tubes and disk that surrounds the fuel tubes. The third path is through three 1.3 inch-diameter holes in each of the disks that are intended to provide additional paths for water flow between disks. The basket bottom weldment supports the fuel tubes above the canister bottom plate. The fuel tubes are open at the top and bottom ends, allowing the free flow of water from the bottom of the fuel tube. The bottom weldment is positioned by supports 1.0 inch above the canister bottom to facilitate water flow to the drain line. These design features ensure that water flows freely in the basket so that the canister fills and drains evenly.

1.2.1.2.2 BWR Fuel Basket

Like the PWR fuel basket, the BWR basket is contained within the stainless steel Transportable Storage Canister. The BWR fuel basket is also a right-circular cylinder configuration with square fuel tubes laterally supported by a series of support disks (40 disks for the Class 4 fuel basket and 41 disks for the Class 5 fuel basket). The basket design parameters for the storage of the two classes of BWR fuel are provided in Table 1.2-4. The support disks are retained by cylindrical spacers on tie rods at six locations. The top nut is torqued at installation to provide a solid load path in compression between the support disks. The 0.625 in.-thick, 65.5 in.-diameter support disks are fabricated of SA-533, Type B, Class 2 carbon steel and are coated with electroless nickel to inhibit corrosion and the formation of combustible gases during fuel loading. The disks are spaced axially at 3.8 in. center-to-center and contain square holes for the fuel tubes.

The 1.0 in.-thick top and bottom weldments are fabricated from Type 304 stainless steel, and are geometrically similar to the support disks. The tie rods have a 2.5 in.-length of 1 5/8 - 8 UN thread at the upper end and are fabricated from Type 304 stainless steel. The top nut and spacers are 3 inch-diameter bars of Type 304 stainless steel. The fuel tubes are also fabricated from Type 304 stainless steel. Three types of tubes are designed to contain BWR fuel: tubes with BORAL on two sides, tubes with BORAL one side, and tubes with no BORAL. No credit is taken for the fuel tubes for structural strength of the basket or support of the fuel assemblies.

Each BWR fuel basket has a capacity of 56 BWR fuel assemblies in an aligned configuration. The fuel tubes in 52 positions have an inside square dimension of 5.90 inch. The inside dimension of the four fuel tubes located in the outside corners of the basket array is 6.05 in. square. The BWR fuel tubes have 0.201 in.-thick walls (including BORAL and cladding). The holes in the top weldment are 5.75 in. by 5.75 in. except for the four enlarged holes, which are 5.90 in. square. The hole in the bottom weldment is 5.63 in. by 5.63 inch. The flanged outer surface at the top of the fuel tube is 6.59 in. by 6.59 inch. The basket design traps the fuel tube between the top and bottom weldments, thereby preventing axial movement of the fuel tube. The support disk webs between the fuel tubes are 0.65 in. wide. The BWR fuel basket design also incorporates 17 Type 6061-T651 aluminum alloy heat transfer disks similar in design and function of those in the PWR baskets.

The BWR canister is also designed to facilitate filling with water and subsequent draining. Water fills and drains freely between the basket disks through three separate paths. One path is the gaps that exist between the disks and canister shell. The second path is through the gaps between the fuel tubes and disk that surrounds the fuel tubes. The third path is through a 2.0 inch-diameter hole in each of the disks that is intended to provide an additional path for water flow between disks. The basket bottom weldment supports the fuel tubes above the canister bottom plate. The fuel tubes are open at the top and bottom ends, allowing the free flow of water from the bottom of the fuel tube. The bottom weldment is positioned by supports 4.0 inch above the canister bottom to facilitate water flow to the drain line. These design features ensure that water flows freely in the basket so that the canister fills and drains evenly.

1.2.1.3 Vertical Concrete Cask

The Vertical Concrete Cask is the storage overpack for the Transportable Storage Canister. Five concrete casks of different lengths are designed to store five canisters of different lengths containing one of three classes of PWR or of two classes of BWR fuel assemblies. The concrete cask provides structural support, shielding, protection from environmental conditions, and natural convection cooling of the canister during long-term storage. Table 1.2-5 lists the principal physical design parameters of the concrete cask.

The concrete cask is a reinforced concrete (Type II Portland cement) structure with a structural steel inner liner. The concrete wall and steel liner provide the neutron and gamma radiation shielding to reduce the average contact dose rate to less than 50 millirem per hour for design basis PWR or BWR fuel. Inner and outer reinforcing steel (rebar) assemblies are contained

1.8 License Drawings

This section presents the list of License Drawings for the Universal Storage System.

1.8.1 License Drawings for the UMS® Universal Storage System

Drawing Number	Title	Revision No.	No. of Sheets
790-501	Canister/ Basket Assembly Table, NAC-UMS®	2	1
790-559	Assembly, Transfer Adapter, NAC-UMS®	2	3
790-560	Assembly, Transfer Cask (TFR) NAC-UMS®	7	5
790-561	Weldment, Structure, Vertical Concrete Cask (VCC), NAC-UMS®	5	3
790-562	Reinforcing Bar And Concrete Placement, Vertical Concrete Cask (VCC), NAC-UMS®	5	4
790-563	Lid, Vertical Concrete Cask (VCC), NAC-UMS®	3	1
790-564	Shield Plug, Vertical Concrete Cask (VCC), NAC-UMS®	3	2
790-565	Nameplate, Vertical Concrete Cask (VCC), NAC-UMS®	1	1
790-570	Fuel Basket Assembly, 56 Element BWR, NAC-UMS®	3	2
790-571	Bottom Weldment, Fuel Basket, 56 Element BWR, NAC-UMS®	2	1
790-572	Top Weldment, Fuel Basket, 56 Element BWR, NAC-UMS®	4	1
790-573	Support Disk and Misc. Basket Details, 56 Element BWR, NAC-UMS®	6	1
790-574	Heat Transfer Disk, Fuel Basket, 56 Element BWR, NAC-UMS®	3	1
790-575	BWR Fuel Tube, NAC-UMS®	4	2
790-581	PWR Fuel Tube, NAC-UMS®	5	2
790-582	Shell Weldment, Canister, NAC-UMS®	6	1
790-583	Assembly, Drain Tube, Canister, NAC-UMS®	4	1
790-584	Details, Canister, NAC-UMS®	8	2
790-585	Transportable Storage Canister (TSC), NAC-UMS®	7	2
790-590	Loaded Vertical Concrete Cask (VCC), NAC-UMS®	1	1
790-591	Bottom Weldment, Fuel Basket, 24 Element PWR, NAC-UMS®	2	1

License Drawings
(Continued)

Drawing Number	Title	Revision No.	No. of Sheets
790-592	Top Weldment, Fuel Basket, 24 Element PWR, NAC-UMS®	4	1
790-593	Support Disk and Misc. Basket Details, 24 Element PWR, NAC-UMS®	4	1
790-594	Heat Transfer Disk, Fuel Basket, 24 Element PWR, NAC-UMS®	2	1
790-595	Fuel Basket Assembly, 24 Element PWR, NAC-UMS®	4	2
790-605	BWR Fuel Tube, Over-Sized Fuel, NAC-UMS®	5	2

1.8.2 Site Specific Spent Fuel License Drawings

Drawing Number	Title	Revision No.	No. of Sheets
412-501	Spent Fuel Can Assembly, Maine Yankee (MY), NAC-UMS®	2	1
412-502	Fuel Can Details, Maine Yankee (MY), NAC-UMS®	2	4

DCR No.	REVISION
0	INITIAL ISSUE
1	INC DCR 0A
2	INC DCR 1A

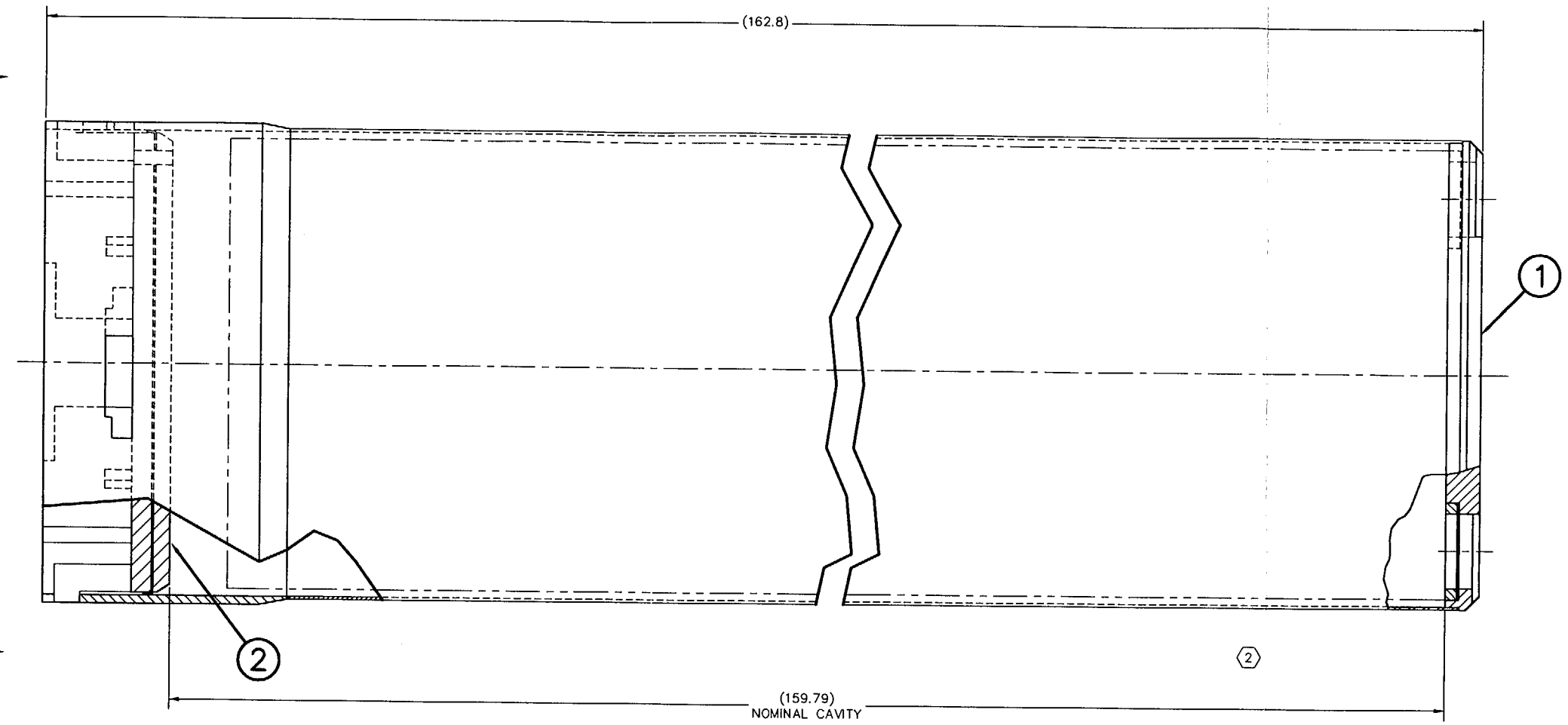

2 99 SPENT FUEL CAN ASSEMBLY

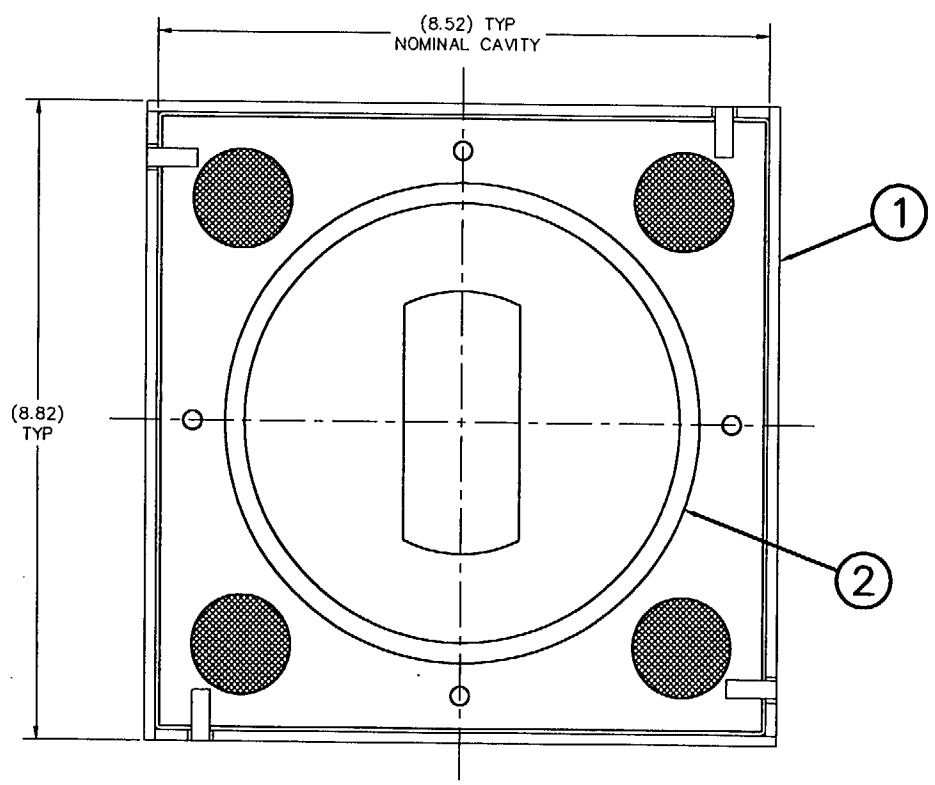

2 VIEW A–A

95	96	97	98	99	ITEM	NAME	MATERIAL	SPEC	DRAWING No.	DESCRIPTION
				1	2	TOP ASSEMBLY			412–502–98	
				1	1	SPENT FUEL CAN WELDMENT			412–502–99	
ASSY	ASSY	ASSY	ASSY	ASSY						
QUANTITY										

DIMENSIONING AND TOLERANCING SHALL BE PER ANSI Y14.5–82
UNSPECIFIED DIMENSIONS AND TOLERANCES SHOWN BELOW.
DIMENSIONS ARE IN INCHES. FRACTIONAL TOLERANCE: ±1/8

SYM.	GEOMETRY	.XXX	TOL.	.XX	TOL.
	FLATNESS	UNDER 3		UNDER 6	±.04
		3–12		6–18	±.08
	STRAIGHTNESS	OVER 12		OVER 18	±.09
	ANGULARITY	.X	±.1	ANGLES ±.5°	
	PERPENDICULARITY	ALL UNSPECIFIED TOOL RADII: .01 – .03			
	PARALLELISM	BREAK ALL SHARP CORNERS .01 – .03			
	CONCENTRICITY	ALL UNSPECIFIED MACHINED SURFACES SHALL BE 125 OR BETTER			
	TRUE POSITION	NEXT ASSEMBLY: N/A			
		DRAWING TYPE: LICENSE			

GROUP	NAME	DATE
PREPARER	R. Worden	5-26-00
CHECKER	Steven Simpson	5-26-00
PROJECT MANAGER	Gary Gilchrist	05/24/00
DIRECTOR, DESIGN AND ANALYSIS	W. Lee TAD	5/26/00
DIRECTOR, LICENSING	Ike Thompson	5/26/00
VICE PRESIDENT, QUALITY	R. Barrette	5/26/00

NAC INTERNATIONAL

SPENT FUEL CAN ASSEMBLY
MAINE YANKEE (MY)
NAC–UMS®

PROJECT	DRAWING	REV
412	501	2
SCALE FULL	EST.WT. 133#	SH 1 OF 1

12:49PM 5-26-2000

DCR No	REVISION
0	INITIAL ISSUE
1	INC DCR 0A
2	INC DCR 1A

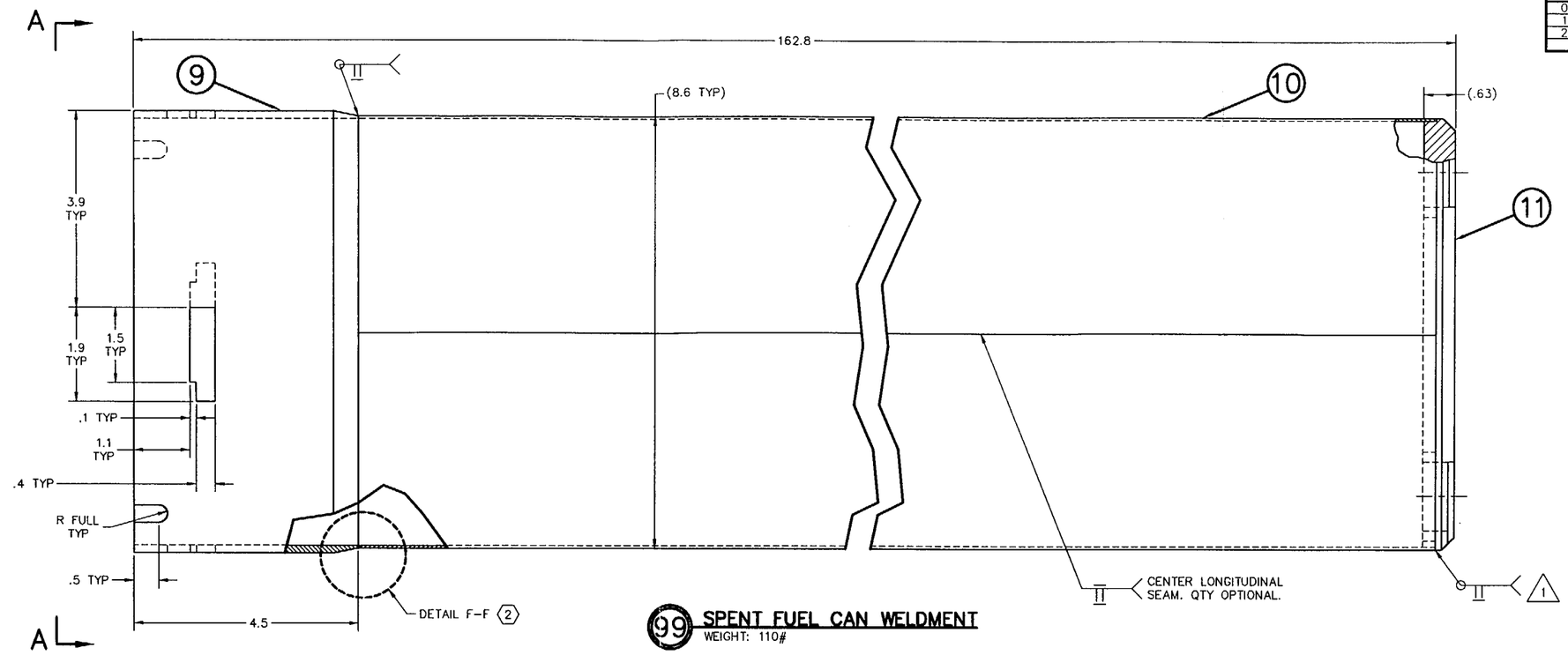

99 SPENT FUEL CAN WELDMENT

WEIGHT: 110#

2 2 MACHINE ITEM 1, FOR LIGHT PRESS FIT WITH ITEM 8, BOTTOM PLATE. THE THICKNESS OF ITEM 1 IS MAINTAINED SO THAT IT IS FLUSH WITH ITEM 8 WHEN THE SCREENS ARE IN PLACE AND THE TWO ITEMS ARE WELDED TOGETHER.

1 MACHINE ITEM 11, BOTTOM ASSEMBLY, FOR SLIP FIT OF ITEM 10, TUBE BODY.

NOTES:

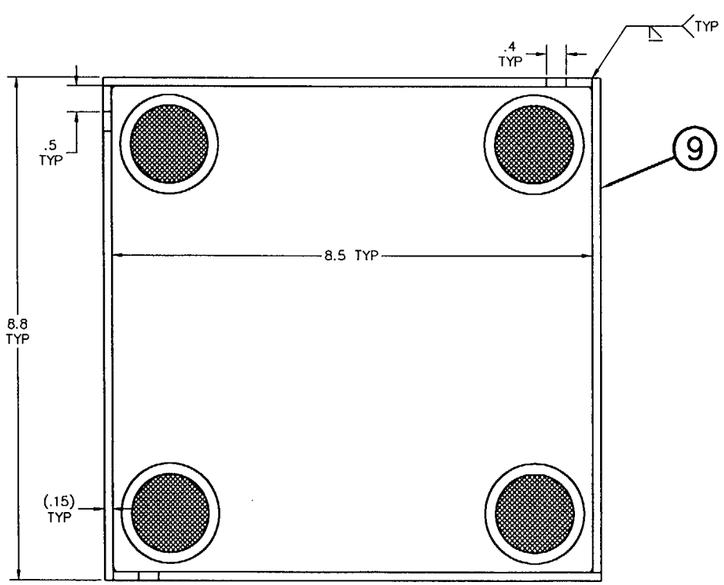

VIEW A–A

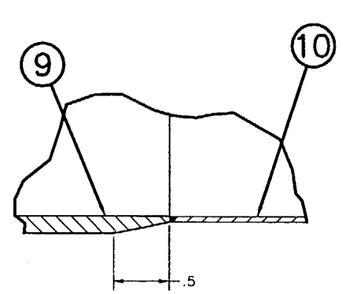

2 DETAIL F–F

SCALE: 2/1

95	96	97	98	99	ITEM	NAME	MATERIAL	SPEC	DRAWING No.	DESCRIPTION
			4		16	DOWEL PIN	ST. STL.	COML		1/4 DIA X 3/4 LONG
			AR		15	BACKING SCREEN	ST. STL.	COML		NEWARK ZQ1 16 X 16 .023
			AR		14	FILTER SCREEN	ST. STL.	COML		NEWARK PAC 250 X 250 X .0016
			1		13	SUPPORT RING	304 ST. STL.	ASME SA312		6" SCH 40 PIPE
			1		12	LIFT TEE	304 ST. STL.	ASME SA240/SA479		PLATE/BAR
				1	11	BOTTOM ASSEMBLY			412-502-97	
				1	10	TUBE BODY	304 ST. STL.	ASME SA240		18 GAGE SHEET
				4	9	SIDE PLATE	304 ST. STL.	ASME SA240/SA479		PLATE/BAR
		1			8	BOTTOM PLATE	304 ST. STL.	ASME SA240		5/8 PLATE
		AR			7	BACKING SCREEN	ST. STL.	COML		NEWARK ZQ1 16 X 16 .023
		AR			6	FILTER SCREEN	ST. STL.	COML		NEWARK PAC 250 X 250 X .0016
			1		5	LID BOTTOM	304 ST. STL.	ASME SA240		5/16 PLATE
			1		4	WIPER	6061-T6 ALUM.	ASTM B209		.032 SHEET
			4		3	LID GUIDE	304 ST. STL.	ASME SA240/SA479		1/4 PLATE/BAR
			1		2	LID PLATE	304 ST. STL.	ASME SA240		3/8 PLATE
		4			1	COLLAR	304 ST. STL.	ASME SA240/SA479		PLATE/BAR
ASSY	ASSY	ASSY	ASSY	ASSY						
QUANTITY										

DIMENSIONING AND TOLERANCING SHALL BE PER ANSI Y14.5-82
UNSPECIFIED DIMENSIONS AND TOLERANCES SHOWN BELOW.
DIMENSIONS ARE IN INCHES. FRACTIONAL TOLERANCE: ±1/8

SYM.	GEOMETRY	.XXX	TOL.	.XX	TOL.
	FLATNESS	UNDER 3		UNDER 6	±.04
		3-12		6-18	±.06
	STRAIGHTNESS	OVER 12		OVER 18	±.09
	ANGULARITY	.X	±.1	ANGLES ±.5°	
		ALL UNSPECIFIED TOOL RADII: .01 - .03			
	PERPENDICULARITY	BREAK ALL SHARP CORNERS .01 - .03			
	PARALLELISM	ALL UNSPECIFIED MACHINED SURFACES SHALL BE 125 OR BETTER			
	CONCENTRICITY	NEXT ASSEMBLY: 412-501			
	TRUE POSITION	DRAWING TYPE: LICENSE			

GROUP	NAME	DATE
PROJ MGR	Tom Simpson	5-25-00
CHECKER	R. Waller	5-25-00
PROJECT MANAGER	Bruce Freeman	5-25-00
DIRECTOR DESIGN AND ANALYSIS	W. Lee Jr.	5/26/00
DIRECTOR, LICENSING	John Hopkins	5/26/00
VICE PRESIDENT, QUALITY	B. Bennett for	5/26/00

NAC INTERNATIONAL

FUEL CAN DETAILS
MAINE YANKEE (MY)
NAC-UMS®

PROJECT	412	DRAWING	502	REV 2
SCALE FULL	EST.WT. NOTED	SH 1 OF 4	4:02PM 5-25-2000	

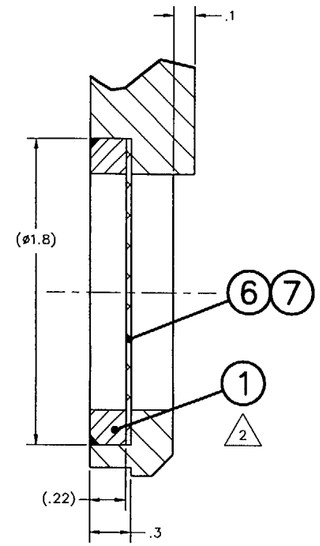

DETAIL E–E
SCALE: 3/1

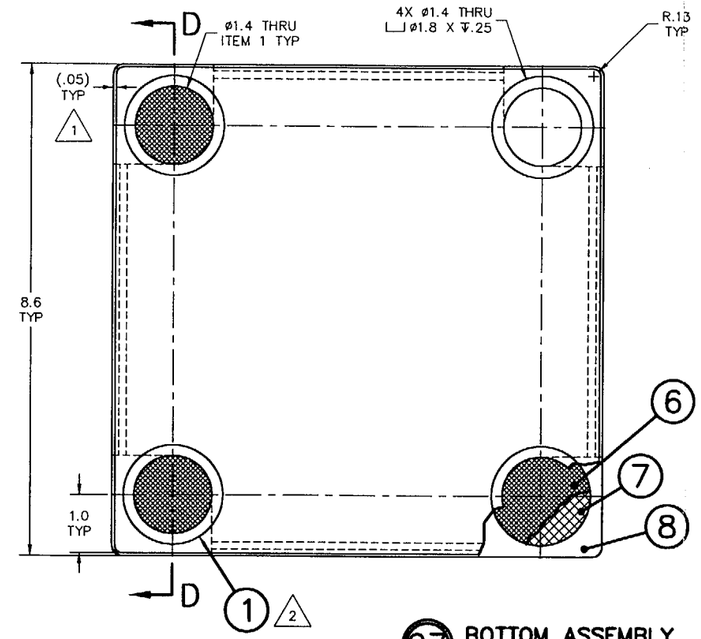

97 BOTTOM ASSEMBLY
WEIGHT: 14#

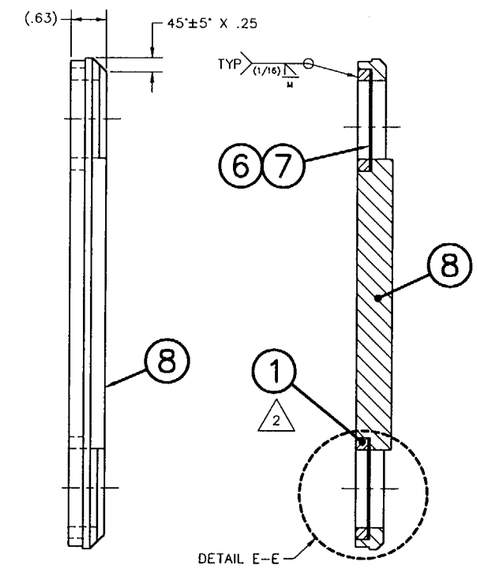

SECTION D–D

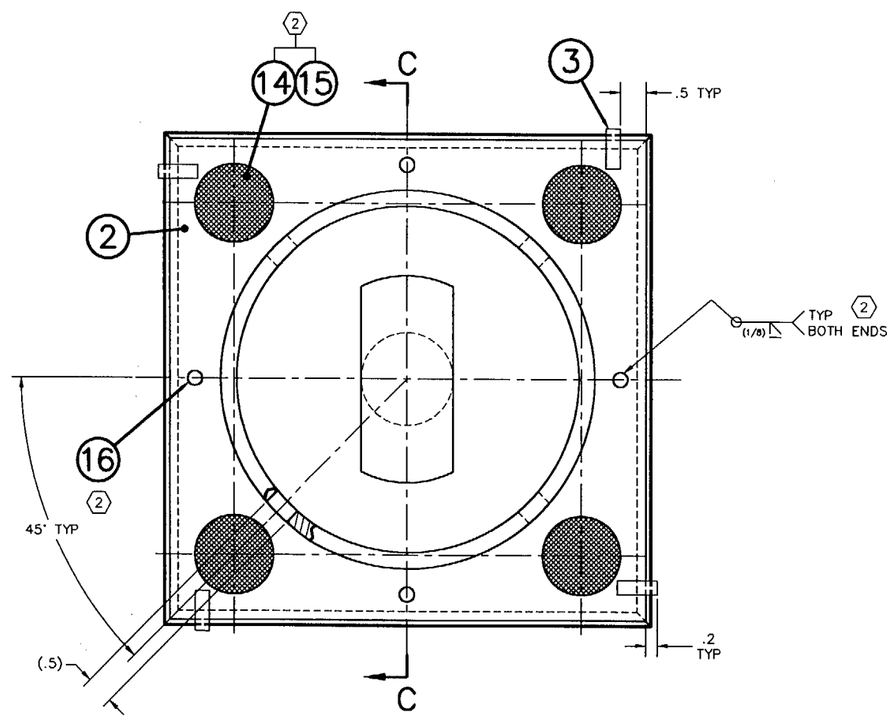

2 98 TOP ASSEMBLY
WEIGHT: 23#

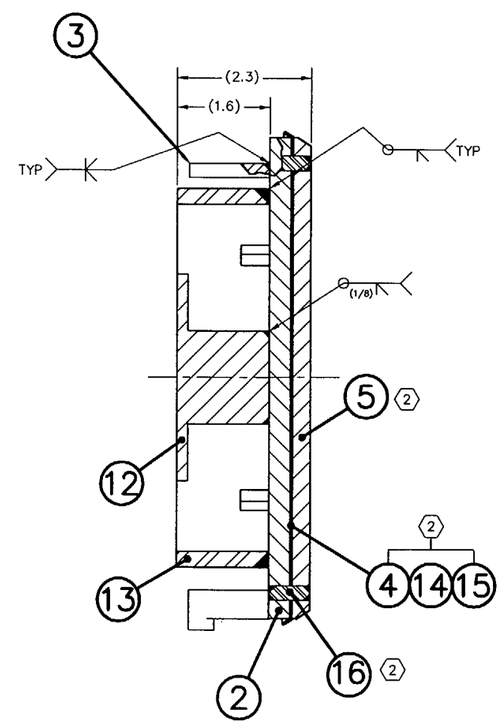

SECTION C–C

NAC INTERNATIONAL

FUEL CAN DETAILS
MAINE YANKEE (MY)
NAC–UMS®

PROJECT 412		DRAWING 502	REV 2
SCALE FULL	EST.WT. NOTED	SH 2 OF 4	4:04PM 5-25-2000

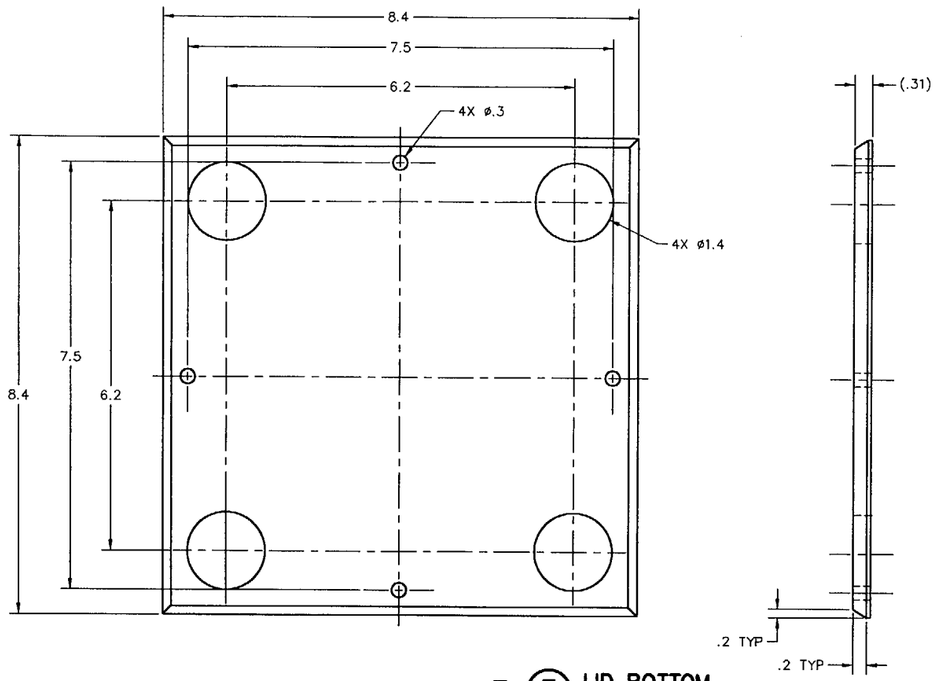

② 5 LID BOTTOM

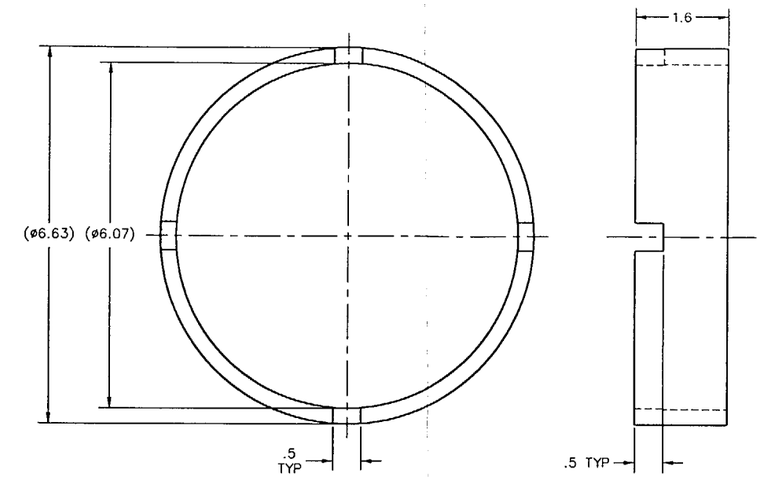

② 13 SUPPORT RING

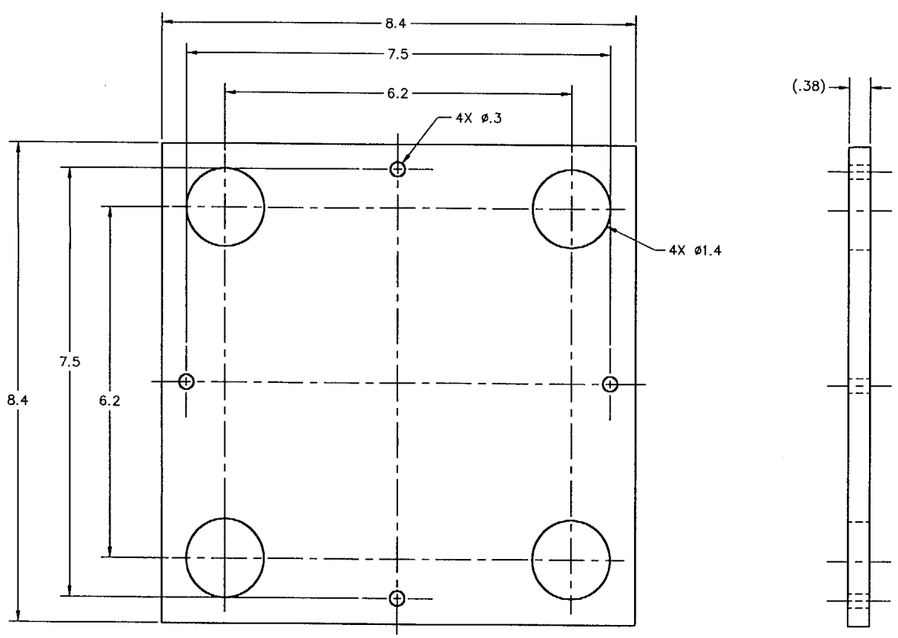

② 2 LID PLATE

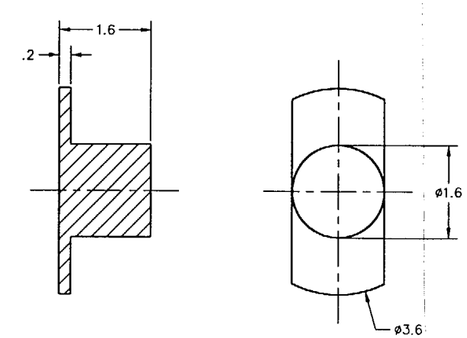

② 12 LIFT TEE

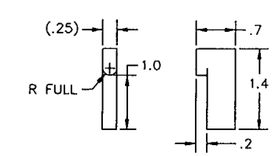

3 LID GUIDE

NAC INTERNATIONAL

FUEL CAN DETAILS
MAINE YANKEE (MY)
NAC-UMS®

PROJECT 412		DRAWING 502	REV 2
SCALE FULL	EST.WT. NOTED	SH 3 OF 4	4:07PM 3-25-2006

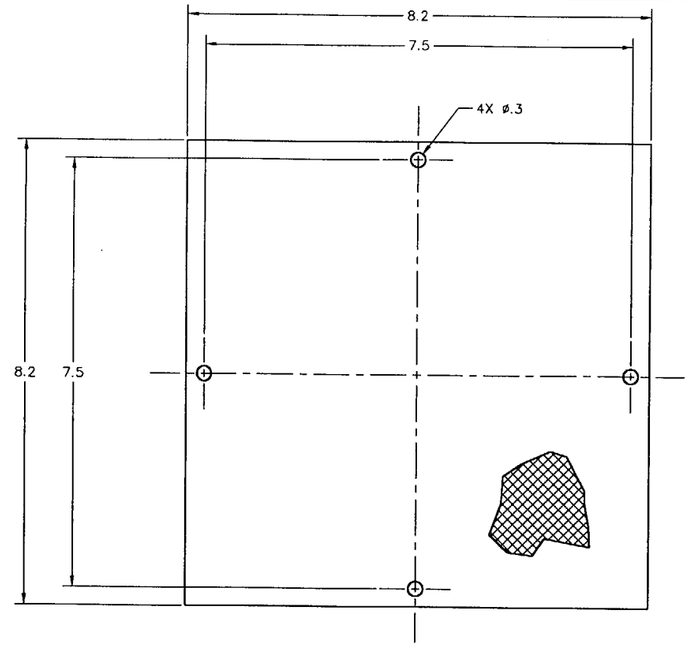

② (14) FILTER SCREEN

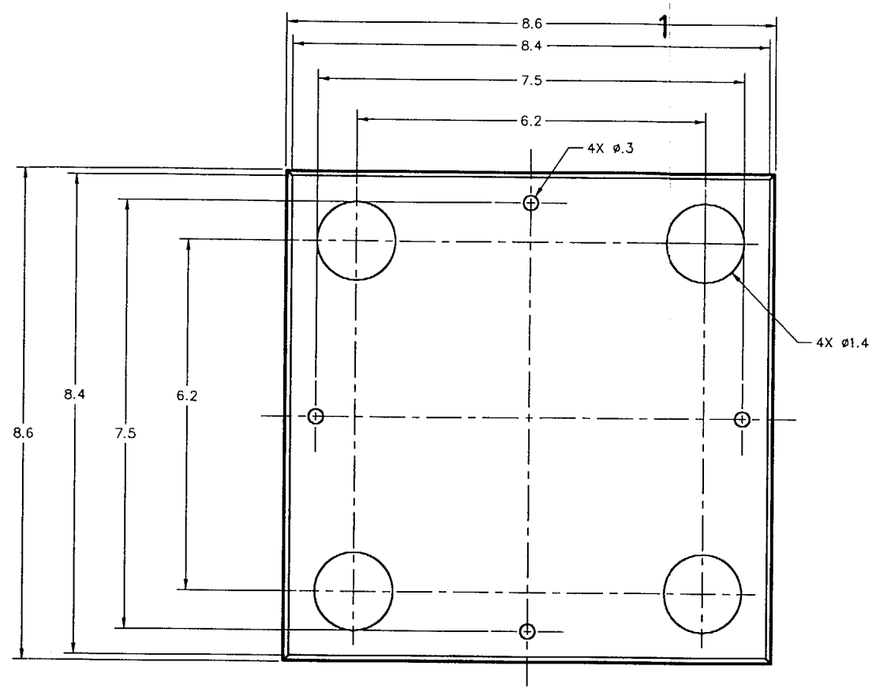

② (4) WIPER

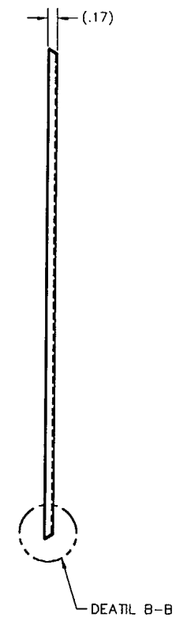

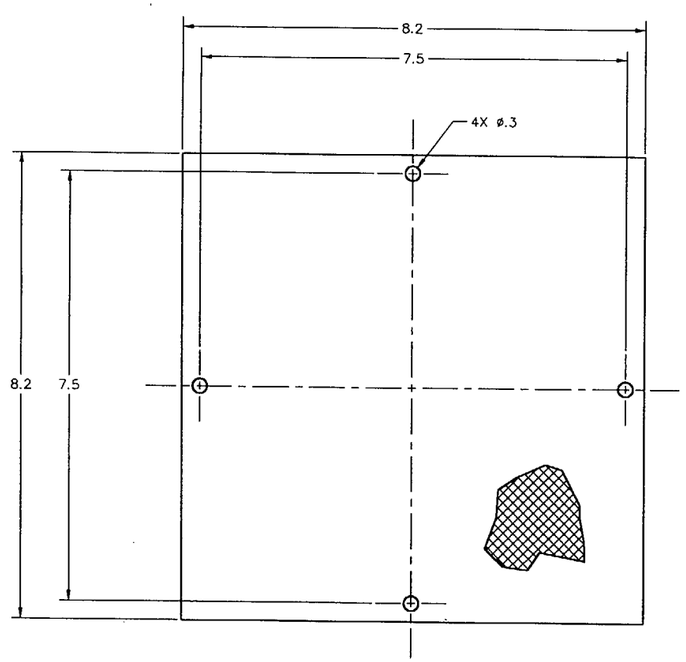

② (15) BACKING SCREEN

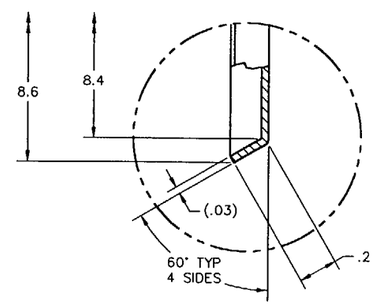

DETAIL B–B
SCALE: 4/1

NAC INTERNATIONAL

FUEL CAN DETAILS
MAINE YANKEE (MY)
NAC-UMS®

PROJECT 412		DRAWING 502	REV 2
SCALE FULL	EST.WT. NOTED	SH 4 OF 4	4:08PM 5-25-2000

The Maine Yankee fuel can design and fabrication specification summary is provided in Table 2.1.3.1-2. The major physical design parameters of the Maine Yankee fuel can are provided in Table 2.1.3.1-3. The structural evaluation of the Maine Yankee site specific fuel configurations is provided in Section 3.6.1. As shown in Section 4.5.1, the maximum allowable heat load for the contents of a Maine Yankee fuel can is 0.958 kW.

2.1.3.1.6 Maine Yankee Site Specific Spent Fuel Preferential Loading

The estimated Maine Yankee site specific spent fuel inventory is shown in Table 2.1.3.1-1. (Note that the population of fuel in a given configuration may change based on future spent fuel inspection or survey.) As shown in this table, certain fuel configurations are preferentially loaded to take advantage of the design features of the Transportable Storage Canister and basket to allow the loading of fuel that does not specifically conform to the design basis spent fuel. The designated preferential loading positions are shown in Figure 2.1.3.1-1. The corner positions are designated by the letter "C." These positions are used primarily for the loading of fuel with missing fuel rods, fuel with fuel rods that have been replaced by rods of other material, for consolidated fuel lattices, and for damaged fuel. The requirements for preferential loading schemes using the corner positions result primarily from shielding or criticality evaluations of the designated fuel configurations.

Maine Yankee consolidated fuel is loaded in a Maine Yankee fuel can and is, therefore, designated for a corner position. Preferential loading is also used for spent fuel having a burnup between 45,000 and 50,000 MWD/MTU. This fuel is assigned to peripheral locations designated by the letter "P" in Figure 2.1.3.1-1. The thermal analysis supporting the use of these locations for higher burnup fuel is presented in Section 4.5.1. As described in that section, the interior locations must be loaded with fuel that has lower burnup and/or longer cool times in order to maintain the design basis heat load and component temperature limits. Loading tables, which provide the limits for decay heat on a per assembly basis, are also provided in Section 4.5.1.

High burnup fuel (45,000 – 50,000 MWD/MTU) may be loaded as intact fuel provided that for a given fuel assembly, the cladding oxide layer on no more than 1% of the fuel rods has a peak thickness greater than 80 microns and no more than 3% of the fuel rods have a peak oxide layer thickness greater than 70 microns. The high burnup fuel must be loaded as failed fuel (i.e., in a Maine Yankee fuel can), if the cladding oxide layer criteria are not met, or if the oxide layer is detached or spalled from the cladding. Since the transportable storage canister is tested to be leak tight, no additional confinement analysis is required for the high burnup fuel.

Fuel assemblies with a control element inserted will be loaded in a Class 2 canister and basket for storage and transport due to the increased length of the assembly with the control element installed. However, these assemblies are not restricted as to loading position within the basket.

2.1.3.1.7 Maine Yankee High Burnup Fuel

There are ninety (90) Maine Yankee fuel assemblies that have achieved a burnup between 45,000 and 50,000 MWD/MTU. As described in Section 2.1.3.1.6, these fuel assemblies are preferentially loaded in peripheral locations in the basket. The high burnup assemblies are similar to the other Maine Yankee fuel planned to be placed in dry storage (i.e., those with burnup less than 45,000 MWD/MTU), but have design differences that support the high burnup objective.

The Combustion Engineering 14 x 14 high burnup fuel assemblies incorporate a lower (fuel rod) internal pressure than the UMS design basis fuel, which results in lower cladding stress throughout their reactor and storage life, and a greater cladding thickness. The greater cladding thickness, together with a larger fuel rod diameter, provide additional margin against regulatory limits. Some of the fuel assemblies have a "low tin" Zircaloy cladding, which results in lower hydrogen pick-up in the cladding and a lower cladding oxide layer thickness.

Publicly available DOE-sponsored research studies on high burnup fuel have measured irradiated Zircaloy material properties. These studies show that even at burnups over 50,000 MWD/MTU, Zircaloy cladding has adequate material strength and ductility to maintain the fuel rod integrity throughout all conditions of storage. The technical details of the DOE sponsored research studies include hot cell examinations of actual irradiated fuel from the Fort Calhoun [22] and Oconee [23] reactors.

The published reports conclude that there is an increase in the yield and ultimate strengths of the high burnup fuel rod Zircaloy cladding, with an oxide layer thickness less than or equal to 80 microns while the material ductility decreases. The Fort Calhoun and Oconee fuel rods examined had maximum burnup up to 55,700 and 54,800 MWD/MTU, respectively. Localized burnup of these fuel rods reached over 60,000 MWD/MTU. The burnups encompass the burnups of the Maine Yankee high burnup fuel. Tables 17, 18 and 19 of the Fort Calhoun report (DOE/ET/34030-11) demonstrate that, at the respective burnups, there is a significant increase in the yield and ultimate strengths of the Zircaloy cladding with a corresponding decrease in the

material ductility (plastic strain). This is further confirmed in the Oconee fuel examination report (DOE/ET/34212-50) in Table 20. These studies show that the Zircaloy material property changes occur during the early stages of irradiation and do not change significantly during the higher burnup periods. The Fort Calhoun and Maine Yankee fuels are essentially identical and are fabricated by the same supplier (Combustion Engineering). Therefore, it is concluded that the Maine Yankee high burnup fuel (45,000 < Burnup < 50,000 MWD/MTU) Zircaloy cladding ultimate and yield strengths are greater than those of standard burnup fuel assemblies, while maintaining adequate material ductility to perform its design functions.

The Maine Yankee high burnup fuel assemblies were fabricated according to their respective fuel specifications without any discrepancies or deviations that affected cladding. Review of Plant Operating Data demonstrates that the fuel has not been subjected to any unanalyzed events that could potentially lead to excessive cladding stress.

Review of fuel inspection records and video tapes of the Maine Yankee high burnup fuel assemblies shows that the fuel is essentially identical to fuel that is burned less than 45,000 MWD/MTU, with no evidence of damage or excessive cladding oxidation.

The supporting data and information demonstrates that the physical and mechanical characteristics of the Maine Yankee high burnup fuel assemblies (45,000 < Burnup < 50,000 MWD/MTU) are essentially identical to those of the fuel assemblies with burnup less than 45,000 MWD/MTU.

As noted in Section 2.1.3.1.6, high burnup fuel (45,000 – 50,000 MWD/MTU) may be loaded as intact fuel provided that for a given fuel assembly, the cladding oxide layer on no more than 1% of the fuel rods has a peak thickness greater than 80 microns and no more than 3% of the fuel rods have a peak oxide layer thickness greater than 70 microns. The high burnup fuel must be loaded as failed fuel (i.e., in a Maine Yankee fuel can), if the fuel is not classified as intact, does not meet the oxide layer thickness criteria, or if the oxide layer is detached or spalled from the fuel cladding. Since the transportable storage canister is tested to be leak tight, no additional confinement analysis is required for the high burnup fuel.

Figure 2.1.3.1-1 Preferential Loading Diagram for Maine Yankee Site Specific Spent Fuel

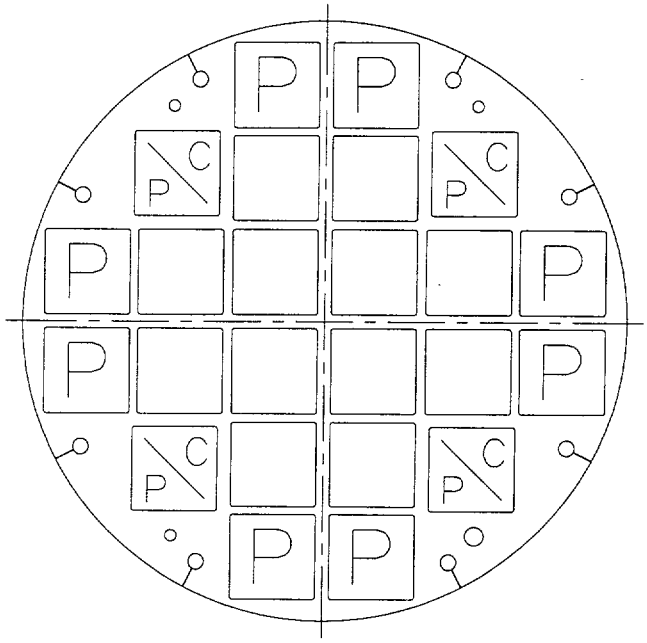

Table of Contents

3.0 STRUCTURAL EVALUATION 3.1-1

3.1 Structural Design 3.1-1
- 3.1.1 Discussion 3.1-2
- 3.1.2 Design Criteria 3.1-6

3.2 Weights and Centers of Gravity 3.2-1

3.3 Mechanical Properties of Materials 3.3-1
- 3.3.1 Primary Component Materials 3.3-1
- 3.3.2 Fracture Toughness Considerations 3.3-14

3.4 General Standards 3.4.1-1
- 3.4.1 Chemical and Galvanic Reactions 3.4.1-1
  - 3.4.1.1 Component Operating Environment 3.4.1-1
  - 3.4.1.2 Component Material Categories 3.4.1-1
  - 3.4.1.3 General Effects of Identified Reactions 3.4.1-9
  - 3.4.1.4 Adequacy of the Canister Operating Procedures 3.4.1-9
  - 3.4.1.5 Effects of Reaction Products 3.4.1-9
- 3.4.2 Positive Closure 3.4.2-1
- 3.4.3 Lifting Devices 3.4.3-1
  - 3.4.3.1 Vertical Concrete Cask Lift Evaluation 3.4.3-5
  - 3.4.3.2 Canister Lift 3.4.3-20
  - 3.4.3.3 Transfer Cask Lift 3.4.3-27
- 3.4.4 Normal Operating Conditions Analysis 3.4.4-1
  - 3.4.4.1 Canister and Basket Analyses 3.4.4-1
  - 3.4.4.2 Vertical Concrete Cask Analyses 3.4.4-63
- 3.4.5 Cold 3.4.5-1

3.5 Fuel Rods 3.5-1

Table of Contents (Continued)

3.6 Structural Evaluations of Site Specific Spent Fuel 3.6-1
3.6.1 Structural Evaluation of Maine Yankee Site Specific Spent Fuel for Normal Operating Conditions 3.6-1
3.6.1.1 Maine Yankee Intact Spent Fuel 3.6-1
3.6.1.2 Maine Yankee Damaged Spent Fuel 3.6-2

3.7 References 3.7-1

3.8 Carbon Steel Coatings Technical Data 3.8-1
3.8.1 Carboline 890 ..... 3.8-2
3.8.2 Keeler & Long E-Series Epoxy Enamel 3.8-4
3.8.3 Description of Electroless Nickel Coating 3.8-8

List of Tables

Table 3.2-1 Universal Storage System Weights and CGs – PWR Configuration 3.2-2
Table 3.2-2 Universal Storage System Weights and CGs – BWR Configuration 3.2-3
Table 3.2-3 Calculated Under-Hook Weights 3.2-3
Table 3.3-1 Mechanical Properties of SA-240 and A-240 Type 304 Stainless Steel 3.3-3
Table 3.3-2 Mechanical Properties of SA-479, Type 304 Stainless Steel 3.3-4
Table 3.3-3 Mechanical Properties of SA-240, Type 304L Stainless Steel 3.3-5
Table 3.3-4 Mechanical Properties of SA-564 and SA-693, Type 630, 17-4 PH Stainless Steel 3.3-6
Table 3.3-5 Mechanical Properties of A-36 Carbon Steel 3.3-7
Table 3.3-6 Mechanical Properties of A-615, Grade 60, Reinforcing Steel 3.3-7
Table 3.3-7 Mechanical Properties of SA-533, Type B, Class 2 Carbon Steel 3.3-8
Table 3.3-8 Mechanical Properties of A-588, Type A or B Low Alloy Steel 3.3-9
Table 3.3-9 Mechanical Properties of SA-350/A-350, Grade LF 2, Class 1 Low Alloy Steel 3.3-10
Table 3.3-10 Mechanical Properties of SA-193, Grade B6, High Alloy Steel Bolting Material 3.3-11
Table 3.3-11 Mechanical Properties of 6061-T651 Aluminum Alloy 3.3-12
Table 3.3-12 Mechanical Properties of Concrete 3.3-13
Table 3.3-13 Mechanical Properties of NS-4-FR 3.3-13
Table 3.4.3.3-1 Top 30 Stresses for Transfer Cask Outer Shell Element Top Surface 3.4.3-52
Table 3.4.3.3-2 Top 30 Stresses for Transfer Cask Outer Shell Element Bottom Surface 3.4.3-53
Table 3.4.3.3-3 Top 30 Stresses for Transfer Cask Inner Shell Element Top Surface 3.4.3-54
Table 3.4.3.3-4 Top 30 Stresses for Transfer Cask Inner Shell Element Bottom Surface 3.4.3-55
Table 3.4.4.1-1 Canister Secondary (Thermal) Stresses (ksi). 3.4.4-39
Table 3.4.4.1-2 Canister Dead Weight Primary Membrane (P_m) Stresses (ksi), $P_{internal}$ = 0 psig 3.4.4-40
Table 3.4.4.1-3 Canister Dead Weight Primary Membrane plus Bending ($P_m + P_b$) Stresses (ksi), $P_{internal}$ = 0 psig 3.4.4-41

List of Tables (Continued)

Table 3.4.4.1-4 Canister Normal Handling With No Internal Pressure Primary Membrane (P_m) Stresses, (ksi) 3.4.4-42
Table 3.4.4.1-5 Canister Normal Handling With No Internal Pressure Primary Membrane plus Bending ($P_m + P_b$) Stresses (ksi) 3.4.4-43
Table 3.4.4.1-6 Summary of Canister Normal Handling plus Normal Internal Pressure Primary Membrane (P_m) Stresses (ksi). 3.4.4-44
Table 3.4.4.1-7 Summary of Canister Normal Handling, Plus Normal Pressure Primary Membrane plus Bending ($P_m + P_b$) Stresses (ksi)..... 3.4.4-45
Table 3.4.4.1-8 Summary of Maximum Canister Normal Handling, plus Normal Pressure, plus Secondary (P + Q) Stresses (ksi)..... 3.4.4-46
Table 3.4.4.1-9 Canister Normal Internal Pressure Primary Membrane (P_m) Stresses (ksi)..... 3.4.4-47
Table 3.4.4.1-10 Canister Normal Internal Pressure Primary Membrane plus Bending ($P_m + P_b$) Stresses (ksi) 3.4.4-48
Table 3.4.4.1-11 Listing of Sections for Stress Evaluation of PWR Support Disk..... 3.4.4-49
Table 3.4.4.1-12 $P_m + P_b$ Stresses for PWR Support Disk - Normal Conditions (ksi)..... 3.4.4-52
Table 3.4.4.1-13 P_m+P_b+Q Stresses for the PWR Support Disk - Normal Conditions (ksi)..... 3.4.4-53
Table 3.4.4.1-14 Listing of Sections for Stress Evaluation of BWR Support Disk..... 3.4.4-54
Table 3.4.4.1-15 P_m+P_b Stresses for BWR Support Disk — Normal Conditions (ksi).... 3.4.4-60
Table 3.4.4.1-16 P_m+P_b+Q Stresses for BWR Support Disk - Normal Conditions (ksi).. 3.4.4-61
Table 3.4.4.1-17 Summary of Maximum Stresses for PWR and BWR Fuel Basket Weldments - Normal Conditions (ksi) 3.4.4-62
Table 3.4.4.2-1 Summary of Maximum Stresses for Vertical Concrete Cask Load Combinations..... 3.4.4-75
Table 3.4.4.2-2 Maximum Concrete and Reinforcing Bar Stresses 3.4.4-76
Table 3.4.4.2-3 Concrete Cask Average Concrete Axial Tensile Stresses 3.4.4-77
Table 3.4.4.2-4 Concrete Cask Average Concrete Hoop Tensile Stresses 3.4.4-77

3.3 Mechanical Properties of Materials

The mechanical properties of steels used in the fabrication of the Universal Storage System components are presented in Tables 3.3-1 through 3.3-10. The primary steels, Type 304 and Type 304L stainless steel, were selected because of their high strength, ductility, resistance to corrosion and brittle fracture, and metallurgical stability for long-term storage.

3.3.1 Primary Component Materials

The steels and aluminum alloy used in the fabrication of the canister and basket are:

Canister shell	ASME SA-240, Type 304L stainless steel
Canister bottom plate	ASME SA-240, Type 304L stainless steel
Canister shield lid	ASME SA-240, Type 304 stainless steel
Canister structural lid	ASME SA-240, Type 304L stainless steel
Support disks	
PWR basket	ASME SA-693, Type 630, 17-4 PH stainless steel
BWR basket	ASME SA-533, Type B Class 2 carbon steel
Heat transfer disks	ASME SB-209, Type 6061-T651 aluminum alloy
Spacer nuts	ASME SA-479, Type 304 stainless steel
Tie rods	ASME SA-479, Type 304 stainless steel
Basket end weldments	ASME SA-240, Type 304 stainless steel
Fuel tubes	ASTM A-240, Type 304 stainless steel

SA-182 Type 304 stainless steel may be substituted for SA-240 Type 304 stainless steel for the shield lid provided that the SA-182 material has yield and ultimate strengths greater than or equal to those of the SA-240 material. SA-182 Type 304L stainless steel may be substituted for SA-240 Type 304L stainless steel for the structural lid provided that the SA-182 material has yield and ultimate strengths greater than or equal to those of the SA-240 material.

Steels used in the fabrication of the vertical concrete cask are:

Inner shell	ASTM A-36 carbon steel
Pedestal and base	ASTM A-36 carbon steel
Reinforcing bar	ASTM A-615, Grade 60 carbon steel

The steels used in the fabrication of the transfer cask are:

Inner shell	ASTM A-588 low alloy steel
Outer shell	ASTM A-588 low alloy steel
Bottom plate	ASTM A-588 low alloy steel
Top plate	ASTM A-588 low alloy steel
Retaining ring	ASTM A-588 low alloy steel
Trunnions	ASTM A350, LF2 low alloy steel
Shield doors and rails	ASTM A350, LF2 low alloy steel
Retaining ring bolts	ASTM A325 carbon steel

The mechanical properties of the 6061-T651 aluminum heat transfer disks in the fuel basket are shown in Table 3.3-11. The mechanical properties of the concrete are listed in Table 3.3-12.

4.4.3 Maximum Temperatures for PWR and BWR Fuel

Temperature distribution and maximum component temperatures for the Universal Storage System under the normal conditions of storage and transfer conditions are provided in this section. Components of the Universal Storage System containing PWR and BWR fuels are addressed separately. Temperature distributions for the evaluated off-normal and accident conditions are presented in Sections 11.1 and 11.2.

Figure 4.4.3-1 shows the temperature distribution of the Vertical Concrete Cask and the canister containing the PWR design basis fuel for the normal, long-term storage condition. The air flow pattern and air temperatures in the annulus between the PWR canister and the concrete cask liner for the normal condition of storage are shown in Figures 4.4.3-2 and 4.4.3-3, respectively. The temperature distribution in the concrete portion of the concrete cask for the PWR assembly is shown in Figure 4.4.3-4. The temperature distribution for the BWR design basis fuel is similar to that of the PWR fuel and is, therefore, not presented. Table 4.4.3-1 shows the maximum component temperatures for the normal condition of storage for the PWR design basis fuel. The maximum component temperatures for the normal condition of storage for the BWR design basis fuel are shown in Table 4.4.3-2.

As shown in Figure 4.4.3-3, a high-temperature gradient exists near the wall of the canister and the liner of the concrete cask, while the air in the center of the annulus exhibits a much lower temperature gradient, indicating significant boundary layer features of the air flow. The temperatures at the concrete cask steel liner surface are higher than the air temperature, which indicates that salient radiation heat transfer occurs across the annulus. As shown in Figure 4.4.3-4, the local temperature in the concrete, directly affected by the radiation heat transfer across the annulus, can reach 186°F (less than the 200°F allowable temperature). The bulk temperature in the concrete, as determined using volume average of the temperatures in the concrete region, is 135°F, less than the allowable value of 150°F.

Under typical operations, the transient history of maximum component temperatures for the transfer conditions (canister, inside the transfer cask, containing water for 17 hours, vacuum for 10 hours and helium for 16 hours for PWR fuel and for 24 hours for BWR fuel) is shown in Figures 4.4.3-5 and 4.4.3-6 for PWR and BWR fuels, respectively. The maximum component temperatures for the transfer conditions (vacuum and helium conditions) are shown in Tables 4.4.3-3 and 4.4.3-4, for PWR and BWR fuels, respectively. The maximum calculated water

temperature is 195°F and 204°F for PWR and BWR fuels, respectively, at the end of 17 hours based on an initial water temperature of 100°F. For the maximum temperatures shown in Tables 4.4.3-3 and 4.4.3-4 for the transfer conditions of vacuum and helium, the maximum basket temperatures (support disk and aluminum disk) are conservatively determined by using the maximum temperature in the canister content region of the two-dimensional axisymmetric transfer cask and canister models.

4.4.3.1 Maximum Temperatures at Reduced Total Heat Loads

This section provides the evaluation of component temperatures at PWR fuel heat loads less than the design basis heat load of 23 kW. Steady state evaluations are performed for heat loads of 20, 17, 14, 11 and 8 kW to establish the allowable time limits for the various conditions described in the Technical Specifications (Chapter 12) for the Limiting Conditions of Operation (LCO), LCOs 3.1.1 and 3.1.4. These LCOs control the amount of time that the loaded canister can be in a vacuum condition and the amount of time the loaded canister can remain in the transfer cask after being filled with helium. The time limits ensure that the allowable temperatures of heat transfer disks, support disks and fuel cladding are not exceeded.

At heat loads less than the design basis heat load, the rate of component heat up and the maximum temperature reached by a component are less than those resulting from design basis heat load in the helium backfill condition. Higher component temperatures, which remain below allowable, can occur during the vacuum drying (transient) condition. The reduced heat load configurations are evaluated using the ANSYS models described in Section 4.4.1.3.

The analysis results for the PWR fuel configuration are shown in Table 4.4.3-5 with a comparison to the results for the design basis heat load case (23 kW). The maximum basket temperature is conservatively assumed to be the same as the maximum fuel temperature. As shown in Table 4.4.3-5, there is no time limit for the cases with heat load less than 17 kW after the canister is filled with helium. For heat loads less than 17 kW, the maximum fuel/basket temperatures for the steady state condition are well below the allowable temperatures of the fuel cladding and the fuel basket.

The analysis results for the BWR fuel configuration are shown in Table 4.4.3-6. These results are also compared to the results for the design basis heat load case (23 kW), with the maximum basket temperature conservatively assumed to be the same as the maximum fuel temperature. As shown in Table 4.4.3-6, and similar to the PWR fuel evaluation, there is no time limit for cases

4.5.1.2 Maximum Allowable Heat Loads for Maine Yankee Site Specific Spent Fuel

This section includes evaluations for the Maine Yankee fuel inventory that is not bounded by the evaluation performed in Section 4.4.7. This fuel may have higher burnup than the design basis fuel, have a higher decay heat on a per assembly basis, have a burnup/cool time condition that is outside of the cladding temperature evaluation presented in Section 4.4.7, or be subject to all of these differences.

Maximum allowable clad temperatures and decay heats are evaluated for:

1. Fuel with burnup in excess of 45,000 MWD/MTU (maximum 50,000 MWD/MTU),
2. Preferential loading patterns with hotter fuel on the periphery of the basket, and
3. Preferential loading with fuel exceeding design basis heat load (0.958 kW) per assembly on the basket periphery.

As shown in Section 4.4.7, the standard CE 14 x 14 fuel assembly has a significantly lower cladding stress level than the equivalent burnup Westinghouse 14 x 14 assembly. It is, therefore, conservative to apply the characteristics of the design basis assembly to the CE 14 x 14 Maine Yankee fuel assemblies. (Note that the Westinghouse 14 x 14 assembly evaluated in Section 4.4.7 is the fuel assembly used in Westinghouse reactors, but it is not the Westinghouse 14 x 14 assembly built for use in the CE reactors, such as the Maine Yankee reactor.)

The maximum allowable decay heat, listed either on a per canister or per assembly basis, is combined with dose rate limits in Chapter 5 to establish cool time limits as a function of burnup and initial enrichment. Cool time limits are shown in Tables 5.6.1-10 for Maine Yankee fuel assemblies without installed control components, and in Table 5.6.1-12 for fuel assemblies with installed control components.

High burnup fuel (45,000 – 50,000 MWD/MTU) may be loaded as intact fuel provided that no more than 1% of the fuel rods in the assembly have a peak cladding oxide thickness greater than 80 microns, and no more than 3% of the fuel rods in the assembly have a peak oxide layer thickness greater than 70 microns. The high burnup fuel must be loaded as failed fuel (i.e., in a Maine Yankee fuel can), if these criteria are not met, or if the cladding oxide layer is detached or spalled from the cladding. Since the transportable storage canister is tested to be leak tight, no additional confinement analysis is required for the high burnup fuel.

4.5.1.2.1 Maximum Allowable Temperature and Decay Heat for 50,000 MWD/MTU Fuel

To evaluate higher burnup fuel, cladding oxidation layer thickness and fission gas release fractions are established. Maine Yankee reports that for high burnup fuel rods (i.e., rod peak burnup up to 55,000 MWD/MTU), ABB/Combustion Engineering Incorporated imposes a cladding oxide layer thickness of 120 microns as an operational limit and reports that the maximum gas release fraction (fuel pellet to rod plenum in intact fuel rods) is less than 3% [36]. Therefore, the allowable cladding temperature calculations employ a cladding oxide layer thickness of 0.012 cm (120 microns). This is conservative with respect to the 80 micron cladding oxide layer thickness considered for high burnup fuel that is loaded as intact fuel. A 12% release fraction, established for standard PWR fuel burned up to 45,000 MWD/MTU, is conservatively applied to higher burnup PWR fuel.

Using the evaluation method presented in Section 4.4.7 and a cladding oxidation layer thickness of 0.012 cm, the cladding stress levels for the 50,000 MWD/MTU burnup PWR assembly (maximum stress) are determined and listed in Table 4.5.1.2-1. The data is plotted against the generic allowable temperature curves in Figure 4.5.1.2-2. Included in Figure 4.5.1.2-2 are the 35,000 MWD/MTU to 45,000 MWD/MTU limit lines developed in Section 4.4.7. The intercept of the 50,000 MWD/MTU results in the limiting cladding temperatures shown in Table 4.5.1.2-2, which considers the 1% creep strain limit. The resulting maximum allowable heat load per canister for fuel assemblies with burnup of 50,000 MWD/MTU is listed in Table 4.5.1.2-3.

4.5.1.2.2 Preferential Loading with Hotter Fuel on the Periphery of the Basket

The design basis heat load for the UMS thermal analysis is 23 kW uniformly distributed throughout the basket (0.958 kW per assembly). This heat load applies to the basket structural components at any initial fuel loading time. Further reduction in heat load is required for the Maine Yankee fuel assemblies that fall outside the bounds of the requirement of maximum heat load as shown in Tables 4.4.7-8 and 4.5.1.2-3. These assemblies include:

1. Fuel assemblies (with specific burnup and cool time) that may exceed the maximum allowable decay heat dictated by their cladding temperature allowable (exceeding the limits as shown in Tables 4.4.7-8 and 4.5.1.2-3), if loaded uniformly (all 24 fuel assemblies with the same burnup and cool time, i.e., the same decay heat).

2. Fuel assemblies that are expected to exceed the design basis heat load of 0.958 kW per assembly (maximum heat per assembly less than 1.05 kW).

7.4 Confinement Evaluation for Site Specific Spent Fuel

This section presents the confinement evaluation for fuel assembly types or configurations, which are unique to specific reactor sites. Site specific spent fuel configurations result from conditions that occurred during reactor operations, participation in research and development programs, and from testing programs intended to improve reactor operations. Site specific fuel includes fuel assemblies that are uniquely designed to accommodate reactor physics, such as axial fuel blanket and variable enrichment assemblies, and fuel rod or assemblies that are classified as damaged.

The design of the Transportable Storage Canister incorporates a leak tight configuration as described in Section 7.1 and as defined by ANSI N 14.5. Consequently, site specific fuel configurations need be evaluated only if the configuration results in a modification of the confinement boundary of the canister that is intended for use or when the configuration could result in a higher internal pressure or temperature than is used in the design basis analysis.

7.4.1 Confinement Evaluation for Maine Yankee Site Specific Spent Fuel

Maine Yankee site specific spent fuel is to be stored in either the Class 1 or Class 2 Transportable Storage Canister, depending on the overall length of the fuel assembly, including inserted non fuel-bearing components. These canisters are closed by welding and are inspected and tested to confirm the leak tight condition.

Site specific fuel includes fuel having variable enrichment radial zoning patterns and annular axial fuel blankets, removed fuel rods or empty rod positions, fuel rods placed in guide tubes, consolidated fuel, damaged fuel, and high burnup fuel (fuel with a burnup between 45,000 MWD/MTU and 50,000 MWD/MTU). These configurations are not included in the standard fuel analysis, but are present in the site fuel inventory that must be stored. As discussed in Section 4.5.1, the site specific fuel configurations do not result in a canister pressure or temperature that exceeds the canister design basis. Since the canisters are leak tight, there is no release from a canister containing Maine Yankee high burnup fuel rods site specific spent fuel.

Intact site specific fuel is loaded directly into the fuel tubes in the PWR basket. Damaged fuel is inserted into a fuel can, shown in Drawings 412-501 and 412-502, which precludes the release of gross particulate material from the fuel can. The fuel can is sized to allow its insertion into a fuel position in the PWR basket.

THIS PAGE INTENTIONALLY LEFT BLANK

Table of Contents (Continued)

11.2.6.4 Corrective Actions 11.2.6-3
11.2.6.5 Radiological Impact 11.2.6-3

11.2.7 Maximum Anticipated Heat Load (133°F Ambient Temperature) 11.2.7-1
1.2.7.1 Cause of Maximum Anticipated Heat Load 11.2.7-1
11.2.7.2 Detection of Maximum Anticipated Heat Load 11.2.7-1
11.2.7.3 Analysis of Maximum Anticipated Heat Load 11.2.7-1
11.2.7.4 Corrective Actions 11.2.7-2
11.2.7.5 Radiological Impact 11.2.7-2
11.2.8 Earthquake Event 11.2.8-1
11.2.8.1 Cause of the Earthquake Event 11.2.8-1
11.2.8.2 Earthquake Event Analysis 11.2.8-1
11.2.8.3 Corrective Actions 11.2.8-8
11.2.8.4 Radiological Impact 11.2.8-8
11.2.9 Flood 11.2.9-1
11.2.9.1 Cause of Flood 11.2.9-1
11.2.9.2 Analysis of Flood 11.2.9-1
11.2.9.3 Corrective Actions 11.2.9-5
11.2.9.4 Radiological Impact 11.2.9-5
11.2.10 Lightning Strike 11.2.10-1
11.2.10.1 Cause of Lightning Strike 11.2.10-1
11.2.10.2 Detection of Lightning Strike 11.2.10-1
11.2.10.3 Analysis of the Lightning Strike Event 11.2.10-1
11.2.10.4 Corrective Actions 11.2.10-4
11.2.10.5 Radiological Impact 11.2.10-4
11.2.11 Tornado and Tornado Driven Missiles 11.2.11-1
11.2.11.1 Cause of Tornado and Tornado Driven Missiles 11.2.11-1
11.2.11.2 Detection of Tornado and Tornado Driven Missiles 11.2.11-1
11.2.11.3 Analysis of Tornado and Tornado Driven Missiles 11.2.11-1
11.2.11.4 Corrective Actions 11.2.11-13
11.2.11.5 Radiological Impact 11.2.11-13
11.2.12 Tip-Over of Vertical Concrete Cask 11.2.12-1
11.2.12.1 Cause of Cask Tip-Over 11.2.12-1
11.2.12.2 Detection of Cask Tip-Over 11.2.12-1

Table of Contents (Continued)

11.2.12.3 Analysis of Cask Tip-Over 11.2.12-1
11.2.12.4 Analysis of Canister and Basket for Cask Tip-Over Event 11.2.12-11
11.2.12.5 Corrective Actions 11.2.12-69
11.2.12.6 Radiological Impact 11.2.12-69

11.2.13 Full Blockage of Vertical Concrete Cask Air Inlets and Outlets 11.2.13-1
11.2.13.1 Cause of Full Blockage 11.2.13-1
11.2.13.2 Detection of Full Blockage 11.2.13-1
11.2.13.3 Analysis of Full Blockage 11.2.13-1
11.2.13.4 Corrective Actions 11.2.13-2
11.2.13.5 Radiological Impact 11.2.13-2
11.2.14 Canister Closure Weld Evaluation 11.2.14-1
11.2.15 Accident and Natural Phenomena Events Evaluation for Site Specific Spent Fuel 11.2.15-1
11.2.15.1 Accident and Natural Phenomena Events Evaluation for Site Specific Maine Yankee Spent Fuel 11.2.15-1
11.2.16 Damaged Fuel Assembly Hardware Evaluation 11.2.16-1

11.3 References 11.3-1

List of Figures

Figure 11.1.1-1 Concrete Temperature (°F) for Off-Normal Storage Condition 106°F Ambient Temperature (PWR Fuel) 11.1.1-3
Figure 11.1.1-2 Vertical Concrete Cask Air Temperature (°F) Profile for Off-Normal Storage Condition 106°F Ambient Temperature (PWR) Fuel) 11.1.1-4
Figure 11.1.1-3 Concrete Temperature (°F) for Off-Normal Storage Condition -40°F Ambient Temperature (PWR Fuel) 11.1.1-5
Figure 11.1.1-4 Vertical Concrete Cask Air Temperature (°F) Profile for Off-Normal Storage Condition -40°F Ambient Temperature (PWR Fuel) 11.1.1-6
Figure 11.1.3.1-1 Canister Finite Element Model 11.1.3-4
Figure 11.2.4-1 Concrete Cask Base Weldment 11.2.4-13
Figure 11.2.4-2 Concrete Cask Base Weldment Finite Element Model 11.2.4-14
Figure 11.2.4-3 Strain Rate Dependent Stress-Strain Curves for Concrete Cask Base Weldment Structural Steel 11.2.4-15
Figure 11.2.4-4 Acceleration Time-History of the Canister Bottom During the Concrete Cask 24-Inch Drop Accident With Static Strain Properties ... 11.2.4-16
Figure 11.2.4-5 Acceleration Time-History of the Canister Bottom During the Concrete Cask 24-Inch Drop Accident With Strain Rate Dependent Properties 11.2.4-17
Figure 11.2.4-6 Quarter Model of the PWR Basket Support Disk 11.2.4-18
Figure 11.2.4-7 Quarter Model of the BWR Basket Support Disk 11.2.4-19
Figure 11.2.4-8 Canister Finite Element Model for 60g Bottom End Impact 11.2.4-20
Figure 11.2.4-9 Identification of the Canister Section for the Evaluation of Canister Stresses due to a 60g Bottom End Impact 11.2.4-21
Figure 11.2.6-1 Temperature Boundary Condition Applied to the Nodes of the Inlet for the Fire Accident Condition 11.2.6-4
Figure 11.2.11-1 Principal Dimensions and Moment Arms Used in Tornado Evaluation 11.2.11-14
Figure 11.2.12.4.1-1 Basket Drop Orientations Analyzed for Tip-Over Conditions – PWR 11.2.12-26
Figure 11.2.12.4.1-2 Fuel Basket/Canister Finite Element Model – PWR 11.2.12-27
Figure 11.2.12.4.1-3 Fuel Basket/Canister Finite Element Model – Canister 11.2.12-28
Figure 11.2.12.4.1-4 Fuel Basket/Canister Finite Element Model – Support Disk – PWR 11.2.12-29

List of Figures (Continued)

Figure 11.2.12.4.1-5 Fuel Basket/Canister Finite Element Model – Support Disk Loading – PWR 11.2.12-30
Figure 11.2.12.4.1-6 Canister Section Stress Locations 11.2.12-31
Figure 11.2.12.4.1-7 Support Disk Section Stress Locations – PWR – Full Model 11.2.12-32
Figure 11.2.12.4.1-8 PWR – 109.7 Hz Mode Shape 11.2.12-33
Figure 11.2.12.4.1-9 PWR – 370.1 Hz Mode Shape 11.2.12-34
Figure 11.2.12.4.1-10 PWR – 371.1 Hz Mode Shape 11.2.12-35
Figure 11.2.12.4.2-1 Fuel Basket Drop Orientations Analyzed for Tip-Over Condition – BWR 11.2.12-52
Figure 11.2.12.4.2-2 Fuel Basket/Canister Finite Element Model – BWR 11.2.12-53
Figure 11.2.12.4.2-3 Fuel Basket/Canister Finite Element Model – Support Disk – BWR 11.2.12-54
Figure 11.2.12.4.2-4 Support Disk Section Stress Locations – BWR – Full Model 11.2.12-55
Figure 11.2.12.4.2-5 BWR – 79.3 Hz Mode Shape 11.2.12-56
Figure 11.2.12.4.2-6 BWR – 80.2 Hz Mode Shape 11.2.12-57
Figure 11.2.12.4.2-7 BWR – 210.9 Hz Mode Shape 11.2.12-58
Figure 11.2.13-1 PWR Configuration Temperature History—All Vents Blocked 11.2.13-3
Figure 11.2.13-2 BWR Configuration Temperature History—All Vents Blocked 11.2.13-3
Figure 11.2.15.1.2-1 Two-Dimensional Support Disk Model 11.2.15-8
Figure 11.2.15.1.2-2 PWR Basket Impact Orientations and Case Study Loading Positions for Maine Yankee Consolidated Fuel 11.2.15-9
Figure 11.2.15.1.5-1 Two-Dimensional Beam Finite Element Model for Maine Yankee Fuel Rod 11.2.15-26
Figure 11.2.15.1.5-2 Mode Shape and First Buckling Shape for the Maine Yankee Fuel Rod 11.2.15-27
Figure 11.2.16-1 Two-Dimensional Beam FEM for Fuel Rod with Missing Grid 11.2.16-2
Figure 11.2.16-2 Modal Shape and First Buckling Mode Shape for a Fuel Rod with a Missing Grid 11.2.16-3

11.1.4 Failure of Instrumentation

The Universal Storage System uses an electronic temperature sensing system to read and record the outlet air temperature at each of the four air outlets on each Vertical Concrete Cask. The temperatures are read and recorded [redacted] daily [redacted].

11.1.4.1 Cause of Instrumentation Failure Event

Failure of the temperature measuring instrumentation could occur as a result of component failure, or as a result of another accident condition that interrupted power or damaged the sensing or reader terminals.

11.1.4.2 Detection of Instrumentation Failure Event

The failure is [redacted] identified by the lack of a reading at the temperature reader terminal. The failure could also be identified by disparities between outlet temperatures in a cask or between similar casks.

11.1.4.3 Analysis of Instrumentation Failure Event

Since the temperature of each outlet of each concrete cask is recorded daily, the maximum time period during which the instrumentation failure may go undetected is 24 hours. Therefore, the maximum time period, during which an increase in the outlet air temperatures may go undetected, is 24 hours. The principal condition that could cause an increase in temperature is the blockage of the cooling air inlets or outlets. Section 11.2.13 shows that even if all of the inlets and outlets of a single cask are blocked immediately after a temperature measurement, it would take longer than 24 hours before any component approaches its allowable temperature limit. Therefore, the opportunity exists to identify and correct a defect prior to reaching the temperature limits. During the period of loss of instrumentation, no significant change in canister temperature will occur under normal conditions.

The purpose of the daily temperature monitoring is to ensure that the passive cooling system is continuing to operate normally. Instrument failure would be of no consequence, if the affected storage cask continued to operate in normal storage conditions.

Because the canister and the concrete cask are a large heat sink, and because there are few conditions that could result in a cooling air temperature increase, the temporary loss of remote sensing and monitoring of the outlet air temperature is not a major concern. No applicable regulatory criteria are violated by the failure of the temperature instrumentation system.

11.1.4.4 Corrective Actions

This event requires that the temperature reporting equipment be either replaced or repaired and calibrated. Prior to repair or replacement, the temperature shall be recorded manually.

11.1.4.5 Radiological Impact

There are no radiological consequences for this event.

The model includes a half section of the concrete cask, the concrete ISFSI pad and soil subgrade, as shown:

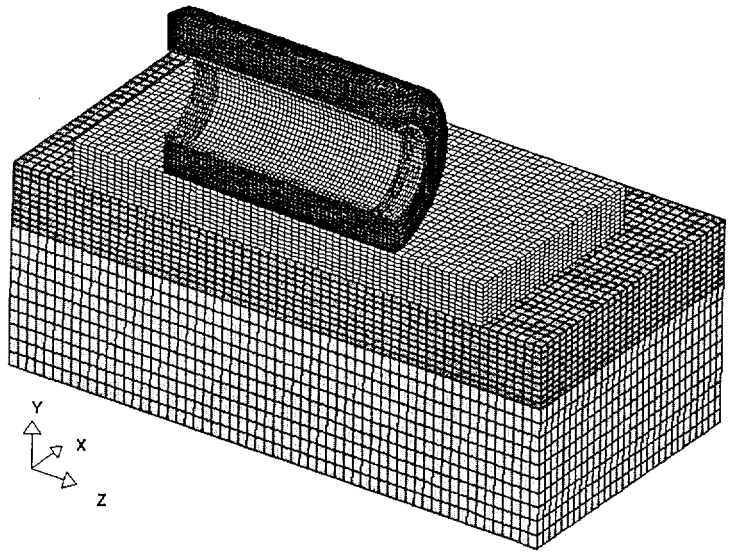

Concrete Pad Properties

Vertical concrete cask tip-over analyses are performed for ISFSI pad concrete compressive strengths of 3,000 and 4,000 psi. The Poisson's Ratio (ν_c) is 0.22. The concrete dry density is considered to be between 135 pcf and 145 pcf. To account for the weight of reinforcing bar in the pad, three values of Density (ρ) are used in the model:

ρ (lbs/ft^3)	E_c (psi)	K_c (psi)
140	2.994×10^6	1.782×10^6
145	3.156×10^6	1.879×10^6
152	3.387×10^6	2.016×10^6

The corresponding values of Modulus of Elasticity (E_c) and Bulk Modulus (K_c) are also provided, where:

Modulus of Elasticity (E_c) $= 33\rho_c^{1.5}\sqrt{f_c'}$ (ACI 318-95)

Bulk Modulus (K_c) $= \dfrac{E_c}{3(1-2\nu_c)}$ (Blevins [19])

Soil Properties

The soil properties used in the model are based on two soil layers. The vertical concrete cask tip-over analyses are performed for two different combinations of soil densities: (1) 4.5-foot thick upper layer density of 135 pcf (Modulus of Elasticity, E = 162,070 psi), with a 10-foot thick lower layer density of 127 pcf (E = 31,900 psi); and (2) 4.5-foot thick upper layer density of 130 pcf, with a 10-foot thick lower layer density of 127 pcf. The Poisson's Ratio (ν_s) of the soil is 0.45.

Summary of Design Basis ISFSI Pad Parameters

The ISFSI pads and foundation shall include the following characteristics as applicable to the end drop and tip-over analyses:

Concrete thickness	36 inches maximum
Pad subsoil thickness	10 feet minimum
Concrete compressive strength	≤ 4,000 psi at 28 days
Concrete dry density (ρ)	$125 \leq \rho \leq 140$ lbs/ft^3
Soil in place density (ρ)	$100 \leq \rho \leq 120$ lbs/ft^3
Soil Modulus of Elasticity	≤ 60,000 psi (PWR); or ≤ 30,000 psi (BWR)

The concrete pad maximum thickness excludes the ISFSI pad footer. The compressive strength of the concrete is determined in accordance with Section 5.6 of ACI-318 with concrete acceptance in accordance with the same section. Steel reinforcement is used in the pad and footer. The soil modulus of elasticity is determined according to the test method described in ASTM D4719.

Vertical Concrete Cask Properties

The material properties used in the model for the Vertical Concrete Cask are the same as the properties used in the PWR models in Section 11.2.12.3. The tip-over impact is simulated by applying an initial angular velocity of 1.485 rad/sec (PWR Class 1) and 1.483 rad/sec (PWR Class 2), respectively to the entire cask. The angular velocity values are determined by the method used in Section 11.2.12 based on the weight of the loaded concrete cask with Maine Yankee fuel (285,513 pounds and 297,509 pounds for PWR Class 1 and PWR Class 2 respectively).

A cut-off frequency of 210 Hz (PWR Class 1) and 190 Hz (PWR Class 2) is applied to filter the analysis results from the LS-DYNA models and determine the peak accelerations. The resulting calculated accelerations on the canister at the location of the top support disk and of the top of the

structural lid are tabulated for all of the analysis cases that were run. The maximum accelerations at the two key locations on the canister for the PWR Class 1 and Class 2 configurations are:

Component Location	Position Measured from the Bottom of the Concrete Cask (inches)		Acceleration (g)	
	Class 1	Class 2	Class 1	Class 2
Top Support Disk	176.7	185.2	32.3	34.2
Top of the Canister Structural Lid	197.9	207.0	35.3	37.6

The impact accelerations for the vertical concrete cask tip-over on the Maine Yankee ISFSI pad site are observed to be slightly higher than those reported in Section 11.2.12.3.1 for the design-basis ISFSI pad. Therefore, peak accelerations are calculated for the top support disk and are evaluated with respect to the analysis presented in Section 11.2.12.4.1.

To determine the effect of the rapid application of the inertia loading for the support disk, a dynamic load factor (DLF) is computed using the method presented in Section 11.2.12.4. The DLF is computed to be 1.07 and 1.02 for PWR Class 1 and Class 2, respectively. Applying the DLFs to the 32.3g and 34.2g results in peak accelerations of 34.6g and 34.9g for the top support disk PWR Class 1 and Class 2, respectively. The DLFs for the canister lids are considered to be unity since the lids have significant in-plane stiffness and are considered to be rigid. Additional sensitivity evaluations considering varying values of the ISFSI concrete pad density have been performed. The results of those evaluations demonstrate that the maximum acceleration for the canister and basket are below 40g. Therefore, the maximum acceleration for the canister and basket for the cask tipover accident on the Maine Yankee site ISFSI pad is bounded by the 40g used in Section 11.2.12.4.1 (Analysis of canister and basket for PWR configurations for tip-over event).

11.2.15.1.2 Parametric Study of Support Disk Evaluation for Maine Yankee Consolidated Fuel

A parametric study is performed to show that the PWR basket loaded with a Maine Yankee consolidated fuel lattice is bounded by the PWR basket design basis loading for a side impact condition. Only one consolidated fuel lattice, in a Maine Yankee Fuel Can, will be loaded in any single Transportable Storage Canister. However, Maine Yankee Fuel Cans holding other intact or damaged fuel can be loaded in the other three corner positions of the basket. (Maine Yankee Fuel Cans may be loaded only in the four corner positions of the basket. See Figure 11.2.15.1.2-2 for corner positions.) Therefore, the bounding case for Maine Yankee is the basket configuration with

twenty (20) Maine Yankee fuel assemblies, three (3) fuel cans containing spent fuel, and one (1) fuel can containing consolidated fuel.

A two-dimensional ANSYS model is employed for the parametric study as shown in Figure 11.2.15.1.2-1. The load from a PWR fuel assembly is modeled as a pressure load at the inner surface of each support disk slot opening. The design basis fuel pressure loading (1g) is 12.26 psi. Based on the same design parameters (slot size = 9.272 in., disk thickness = 0.5 inch, and the number of disks = 30), the pressure load corresponding to a Maine Yankee standard CE 14 x 14 fuel assembly is 10.3 psi. The pressure load is 11.3 psi for a Maine Yankee fuel can holding an intact or damaged fuel assembly. For a Maine Yankee fuel can holding consolidated fuel the pressure load is 17.0 psi.

This study considers a 60g side impact condition for four different basket orientations: 0°, 18.22°, 26.28° and 45°, as shown in Figure 11.2.15.1.2-2. The 60g bounds the g-load for the PWR support disks (40g) due to the Vertical Concrete Cask tip-over accident as shown in Section 11.2.12.

A total of five cases are considered in the study. Inertial loads are applied to the support disk in all cases. The base case considers that all 24 fuel positions hold design basis PWR fuel assemblies. The other four cases (Cases 1 through 4) represent four possible load combinations for the placement of four Maine Yankee fuel cans in the corner positions, one of which holds consolidated fuel. The remaining twenty basket positions hold Maine Yankee standard 14 × 14 fuel assemblies. The basket loading positions are shown in Figure 11.2.15.1.2-2. The load combinations evaluated in the four Maine Yankee fuel can loading cases are:

Case	Basket Position 1	Basket Position 2	Basket Position 3	Basket Position 4
1	Consolidated	Damaged	Damaged	Damaged
2	Damaged	Consolidated	Damaged	Damaged
3	Damaged	Damaged	Damaged	Consolidated
4	Damaged	Damaged	Consolidated	Damaged

Table 11.2.15.1.2-1 provides a parametric comparison between the Base Case and the four cases evaluated, based on the maximum sectional stress in the support disk. As shown in the table, the maximum stress in the PWR basket support disk loaded with 20 standard fuel assemblies and four Maine Yankee fuel cans, including one holding consolidated fuel, is bounded by that for the support disk loaded with the design basis PWR fuel.

Additionally, a three-dimensional analysis was performed for Case 4 with a 26.28° drop orientation using the three-dimensional canister/basket model presented in Section 11.2.12.4.1. Results of the analysis for the top support disk, where maximum stress occurs, are presented in Tables 11.2.15.1.2-2 and 11.2.15.1.2-3. The minimum margin of safety is +1.12 and +0.11 for P_m stresses and $P_m + P_b$ stresses, respectively. The minimum margin of safety for the corresponding analysis for the design basis PWR configuration is +0.97 and +0.05 for P_m and $P_m + P_b$ stresses, respectively (See Table 11.2.12.4.1-4). Therefore, it is further demonstrated that the maximum stress in the PWR support disk loaded with Maine Yankee fuel with consolidated fuel is bounded by the stress for the PWR support disk loaded with the design basis PWR fuel.

Since no credit is taken for the structural integrity of the consolidated fuel or damaged fuel inside the fuel can, it is assumed that 100% of the fuel rods fail during an accident. For a Maine Yankee standard 14×14 fuel assembly, the volume of 176 fuel rods (100%) and 5 guide tubes will fill up the lower 103.6 inches (about at the elevation of the 21st support disk) assuming a 50% volume compaction factor. For the consolidated fuel, the volume of 283 rods (100%) and 4 connector rods will fill up the lower 109.6 inches (about at the elevation of the 22nd support disk) assuming a 75% compaction factor. The compaction factor of 75% for the consolidated fuel considers that the number of rods in the consolidated fuel is approximately 1.5 times of the number of rods in the standard Maine Yankee fuel and these rods are initially more closely spaced.

During a tip-over accident of the vertical concrete cask, the maximum total load on the support disk (top/30th disk) for the design basis PWR basket is 54.6 kips (12.26 psi × 9.272-inch × 0.5-inch × 24 × 40g), considering the design deceleration of 40g (Section 11.2.12.4). With the assumption of 100% rod failure for the damaged fuel and consolidated fuel in the Maine Yankee fuel can, the 21st disk is subjected to the maximum total load (including weight from 20 standard fuel assemblies, 3 damaged fuel assemblies and the consolidated fuel). The pressure load (1g) on the support disk corner slot corresponding to 100% failed damaged fuel is 15.3 psi (load distributed to 21 support disks) and the pressure load corresponding to the 100% failed consolidated fuel is 22.6 psi (load distributed on 22 support disks). In the tip-over accident, the g-load at the 21st disk is 30g, based on the design deceleration of 40g at the top (30th) disk. The total load (W_{21}) on the 21st support disk is:

$$W_{21} = (10.3\times20+15.3\times3+22.6\times1) \times 9.272 \times 0.5 \times 30 = 38{,}200 \text{ pounds} = 38.2 \text{ kips}$$

The support disk load is only 70% (38.2/54.6=0.7) of the maximum total load on the support disk due to the design basis PWR fuel load. Consequently, the maximum stress in the support disk, assuming 100% rod failure of the damaged and consolidated fuel in Maine Yankee fuel cans, is bounded by the maximum stress in the support disk calculated for the design basis fuel.

Figure 11.2.15.1.2-1 Two-Dimensional Support Disk Model

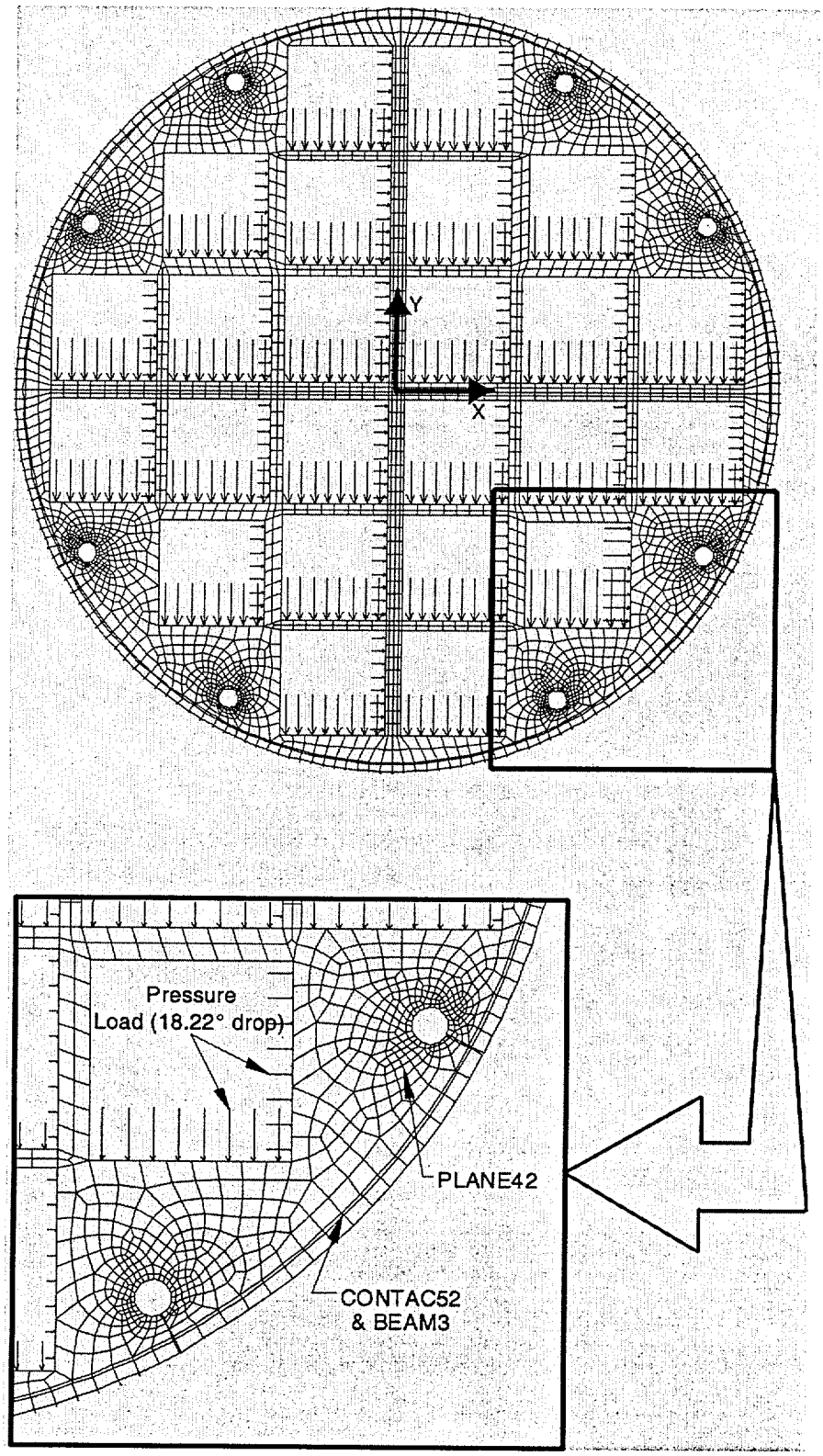

The buckling calculation used the same model employed for the mode shape calculation. The load that would potentially buckle the fuel rod in the end drop is due to the deceleration of the rod. This loading was implemented by applying a 1g acceleration in the direction that would result in compressive loading of the fuel rod. The acceleration required to buckle the fuel rod is computed to be 39.0g. This acceleration is much higher than the effective g-load of 14.6g corresponding to the end drop. Therefore, the fuel rods do not buckle during a 60g end drop.

Figure 11.2.15.1.5-1 Two-Dimensional Beam Finite Element Model for Maine Yankee Fuel Rod

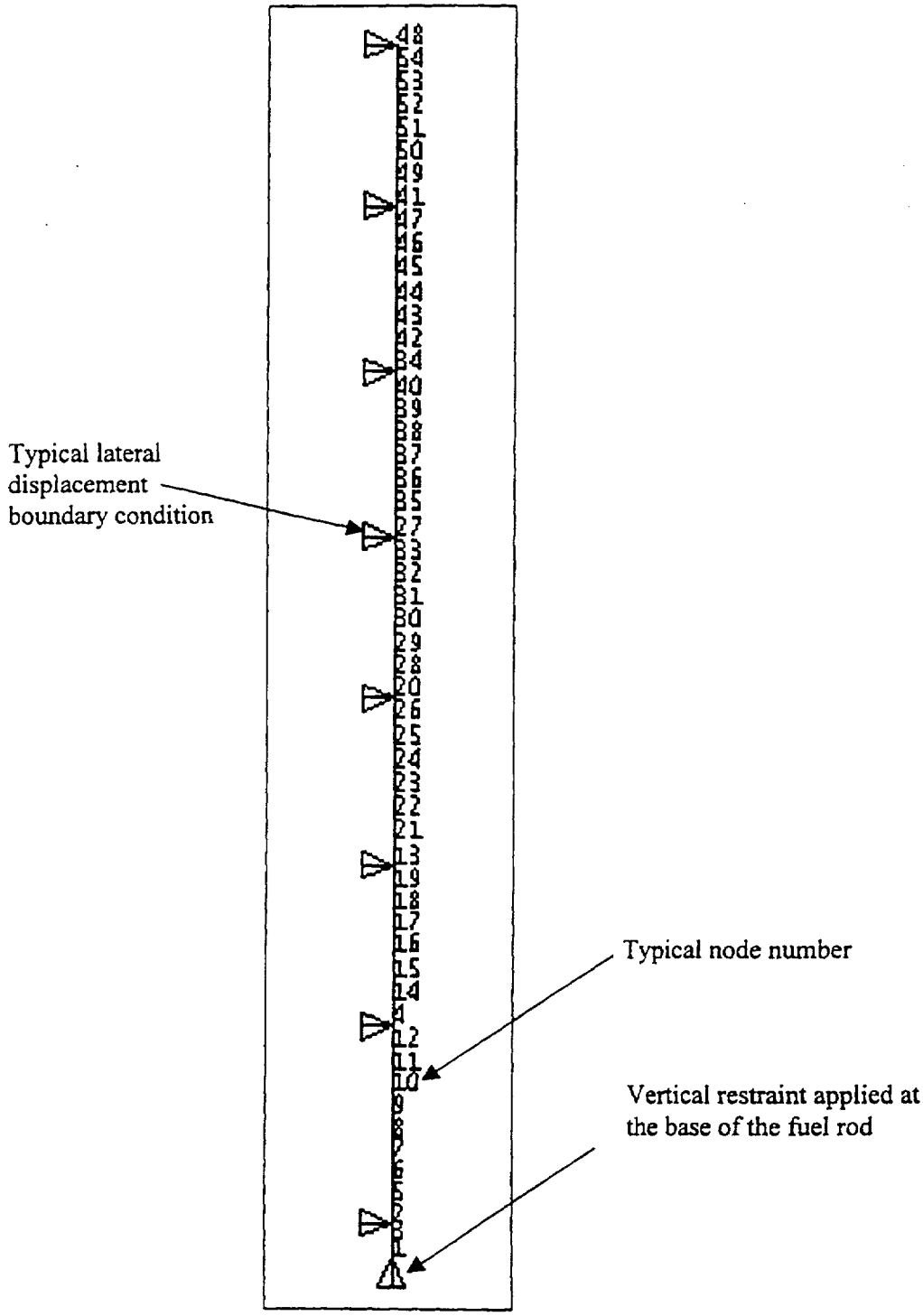

11.2.16 Damaged Fuel Assembly Hardware Evaluation

This section addresses the potential buckling and structural failure of a fuel rod in an assembly with one or more missing support grids up to an unsupported length of fuel rod of 60 inches.

Buckling Evaluation for a Fuel Rod in a Fuel Assembly with Missing Grid Strap(s)

In the following buckling evaluation of an intact fuel assembly, a grid strap is considered to be missing. The buckling load is maximized at the bottom of the fuel assembly. The bounding evaluation is the removal of the grid strap, which maximizes the spacing at the lowest possible vertical elevation. This occurs when the grid at the 33.0-inch elevation is removed, resulting in a grid spacing of approximately 50.0 inches (60.0 inches conservatively used).

The case of the missing grid is evaluated using the same methodology as for the fuel assembly with all the grids being present (See Section 11.2.15.1.5). The bounding dimensions and physical data (minimum clad thickness, maximum rod length and minimum number of support grids) for the Maine Yankee fuel rod used in the model are:

Outer diameter of cladding (inches)	0.44
Cladding thickness (inches)	0.023
Cladding density (lb/in^3)	0.237
Fuel pellet density (lb/in^3)	0.396
Fuel pellet Modulus of Elasticity (psi)	13.0×10^6
Zircaloy cladding Modulus of Elasticity (psi)	10.47×10^6

The cladding thickness has been reduced by an oxidation layer of 80 microns (0.003 inch). The fuel pellet modulus of elasticity is conservatively reduced 50%. The modulus of elasticity of the Zircaloy cladding is taken from ISG-12 [50].

The elevations of the grids in the model, measured from the bottom of the fuel assembly are: 2.3, 51.85, 70.7, 89.6, 108.4, 127.3 and 144.9 (inches). The grid at 51.85 inches is assumed located at 62.3 inches.

With the grid missing, the frequency of the fundamental lateral mode shape is 7.9 Hz. The natural frequency of the fundamental extensional mode was determined to be 218.9 Hz. The DLF is computed to be 0.072, resulting in an effective acceleration of 0.072 x 60 = 4.3 g. Using the same method to compute the acceleration at which buckling occurs, the lowest buckling acceleration is 14.8 g, which is significantly greater than 4.3 g. Therefore, the fuel rod, with the bounding case of a single missing grid, does not buckle during an end drop. Figures 11.2.16-1 and 11.2.16-2 show the finite element model and buckling results and mode shape.

Figure 11.2.16-1 Two-Dimensional Beam FEM for Fuel Rod with Missing Grid

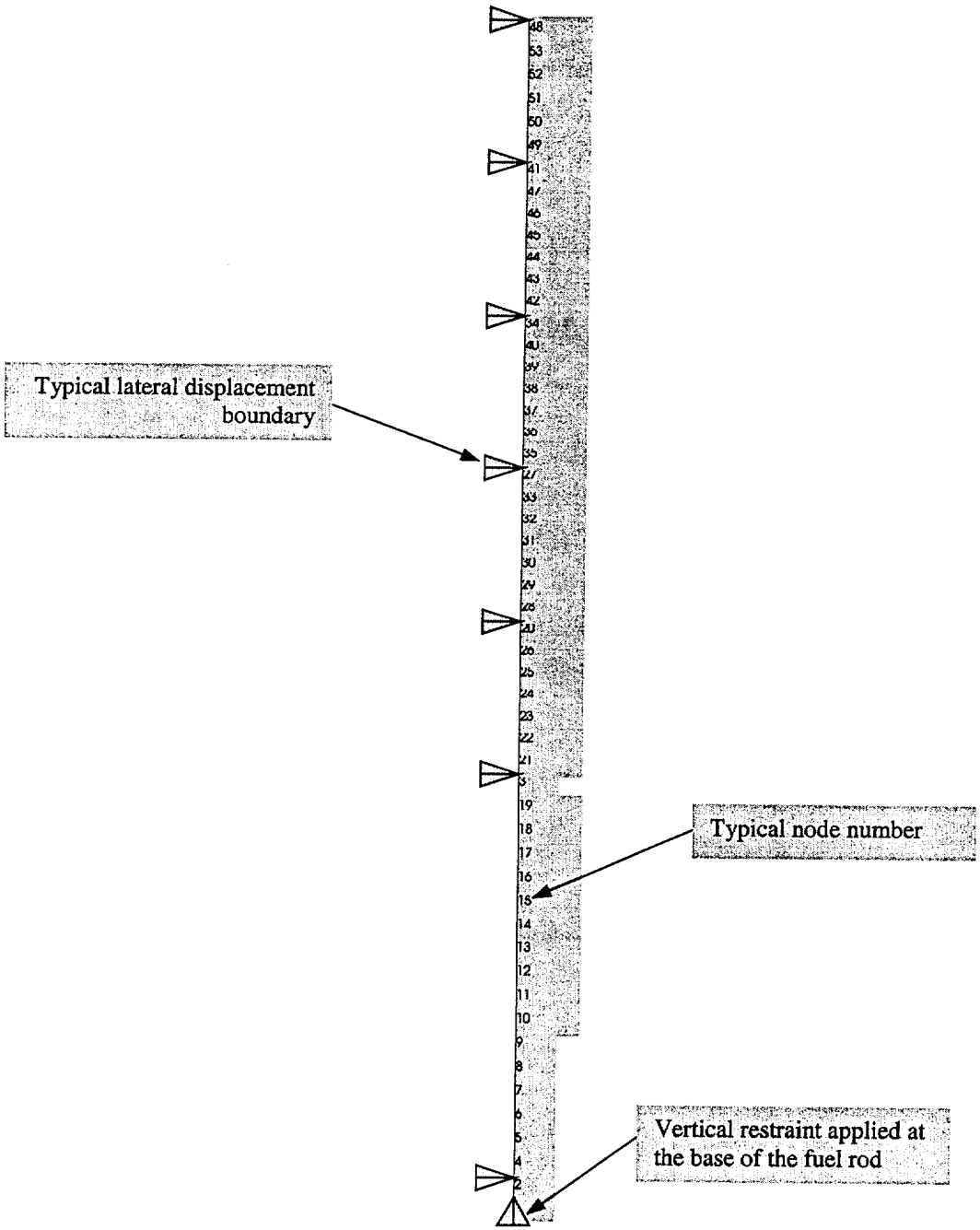

Figure 11.2.16-2 Modal Shape and First Buckling Mode Shape for a Fuel Rod with a Missing Grid

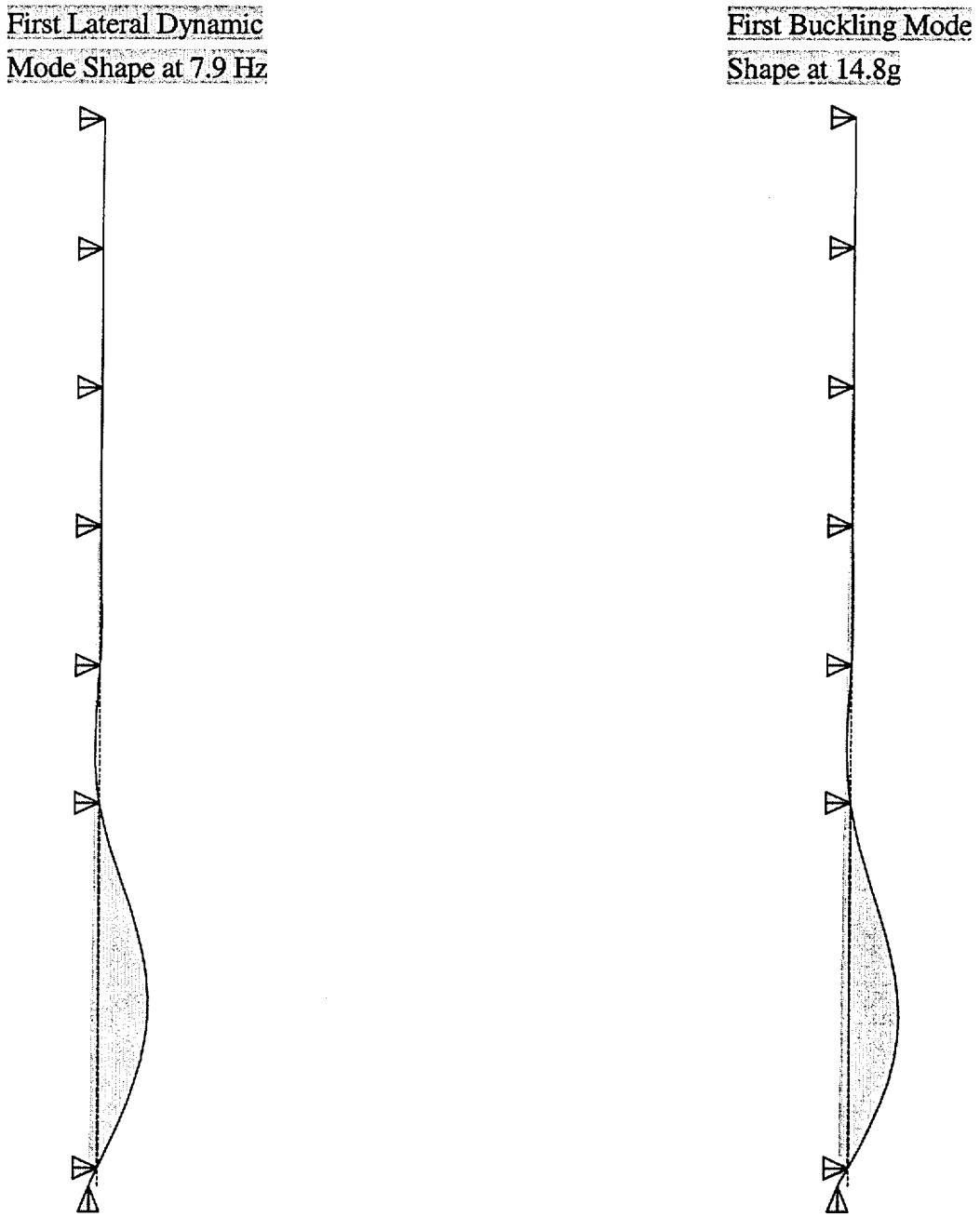

Structural Evaluation of Maine Yankee Fuel Rod in a Fuel Assembly with a Missing Grid

The Maine Yankee fuel rod is evaluated for a 60 g side drop with a missing support grid in the fuel assembly. The span between support grids is assumed to be 60.0 inches (actual span is 49.5 inches).

Analysis Input:

Fuel Rod OD	0.44 in.
Clad ID	0.394 in.
E_{clad}	10.47E6 psi
E_{fuel}	13.0E6 psi
Clad density	0.237 lb/in^3
Fuel density	0.396 lb/in^3
Cross-Sectional area:	
A_{clad}	0.030 in^2
A_{fuel}	0.122 in^2

The mass of the fuel rod per unit length is:

$$m = \frac{0.396(0.122) + 0.237(0.030)}{386.4} = 0.000143 \text{ lb-s}^2/\text{in}^2$$

EI for the fuel rod is:

$$EI_{clad} = 10.47E6 \frac{\pi\left(0.22^4 - 0.197^4\right)}{4} = 6878 \text{ lb-in}^2$$

$$EI_{fuel} = 13.0E6 \frac{\pi\left(0.197^4\right)}{4} = 15378 \text{ lb-in}^2$$

$$EI = 6878 + 15378 = 22{,}256 \text{ lb-in}^2$$

During a side drop, the maximum deflection of a fuel rod is based on the fuel rod spacing of the fuel assembly. The pitch (center to center spacing) of fuel rods is 0.58 inches [51]. The maximum pitch is across the diagonal of the fuel assembly. The maximum pitch is:

$$dp = \frac{0.58}{\sin 45} = 0.82 \text{ in.}$$

The maximum deflection of a fuel rod is at the top of the fuel assembly and the minimum deflection is at the bottom of the fuel assembly.

Assuming a 17x17 array (which envelopes the Maine Yankee 14x14 array), the maximum fuel rod deflection is:

(17-1) x (0.82-0.44) = 6.08 inches.

The deflection of a simply supported beam with a distributed load is given by the equation:

$$\Delta = \frac{5\omega l^4}{384EI} = \frac{5(g\omega)l^4}{384\left(EI_{total}\right)} \qquad [52]$$

$$g = \frac{384\Delta\left(EI_{total}\right)}{5\omega l^4}$$

The cladding bending stress is given by the equation:

$$S = \frac{Mc}{I} = \frac{\left(\left(g\omega l^2\right)/8\right)c}{I_{clad}}\left(\frac{EI_{clad}}{EI_{total}}\right)$$

Inserting the equation for 'g':

$$S = \frac{384\Delta c E_{clad}}{40 \times l^2}$$

The bending stress in the fuel rod is:

$$S = \frac{384 \times 6.08 \times 0.22 \times 10.47E6}{40(60)^2} = 37.4 \text{ ksi}$$

where:

c = 0.22 inch distance from center of fuel rod to extreme outer fiber

$$I = \frac{EI_{total}}{E_{clad}} = \frac{22256}{10.47E6} = 0.0021 in^4$$

The bearing stress between two fuel rods under a 60g load is:

$$S_{brg} = 0.591\sqrt{\frac{\omega E}{K_D}} = 0.591\sqrt{\frac{(0.000143 \times 386.4) \times 60 \times 10.47E6}{0.22}} = 7.4 \text{ ksi} \quad [53]$$

where:

$$K_D = \frac{D_1 D_2}{D_1 + D_2} = \frac{0.44 \times 0.44}{0.44 + 0.44} = 0.22$$

The stress intensity is:

$$SI = 37.4 + 7.4 = 44.8 \text{ ksi}$$

The margin of safety for ultimate strength is:

$$MS = \frac{83.4}{44.8} - 1 = 0.86$$

where:

S_u = 83.4 ksi (575 Mpa) Irradiated Zircaloy-4 Ultimate Strength Allowable (Fig 3-2 [54])

The margin of safety for yield strength is:

$$MS = \frac{78.3}{44.8} - 1 = 0.75$$

where:

S_y = 78.3 ksi (540 Mpa) Irradiated Zircaloy-4 Yield Strength Allowable (Fig 3-2 [54])

The maximum bearing stress occurs between the bottom fuel rod and the fuel tube. The bearing stress is:

$$S_{brg} = 0.591\sqrt{\frac{17 \times 0.000143 \times 386.4 \times 60 \times 10.47E6}{0.44}} = 21.6\,\text{ksi}$$

The bending stress is neglible because the maximum deflection is equal to the thickness of the lattice support stress. Therefore the top fuel rod is bounding.

THIS PAGE INTENTIONALLY LEFT BLANK

27. Fink, D.G., and Beaty, W. H., "Standard Handbook for Electrical Engineers," 13th Edition, McGraw-Hill, Inc., New York, 1993.

28. Black, W.Z. and J.G. Hartley, *Thermodynamics,* 2nd Edition, Harper Collins Publishers, 1991.

29. U.S. NRC Regulatory Guide 1.76, "Design Basis Tornado for Nuclear Power Plants," April 1974.

30. NUREG-0800, "Standard Review Plan," US NRC, June 1987. (Missile masses taken from Draft Revision 3, April 1996.)

31. "Minimum Design Loads for Building and Other Structures," ASCE 7-93, American Society of Civil Engineers, New York, May 12, 1994.

32. "A Review of Procedures for the Analysis and Design of Concrete Structures to Resist Missile Impact Effects," NSS 5-940.1, Nuclear and Systems Sciences Group, Holmes & Narver, Inc., Anaheim, California, September 1975.

33. Full-Scale Tornado-Missile Impact Tests," EPRI NP-440, Sandia Laboratories for the Electric Power Research Institute, Palo Alto, California, July 1977.

34. "Code Requirements for Nuclear Safety Related Concrete Structures (ACI-349-85) and Commentary-ACI 349R-85," American Concrete Institute, Detroit, Michigan, March 1986.

35. Topical Report, "Design of Structures for Missile Impact," BC-TOP-9A, Revision 2, Bechtel Power Corporation, San Francisco, California, September 1974.

36. "Seismic Analysis of Safety-related Nuclear Structures and Commentary on Standard for Seismic Analysis of Safety-related Nuclear Structures," ASCE 4-86, American Society of Civil Engineers, September 1986.

37. Cote, Arthur E., Fire Protection Handbook, 18th Edition, National Fire Protection Association, Quincy, Massachusetts.

38. NUREG/CR-6608, "Summary and Evaluation of Low-Velocity Impact Tests of Solid Steel Billet onto Concrete Pads," Lawrence Livermore National Laboratory, February 1998.

39. NUREG/CR-6322, "Buckling Analysis of Spent Fuel Basket," Lee, A.S., and Bumpas, S.E., Office of Nuclear Material and Safeguards, U.S. Nuclear Regulatory Commission, Washington, DC, May 1995.

40. EPRI TR-108760, "Validation of EPRI Methodology of Analysis of Spent-Fuel Cask Drop and Tipover Events," ANATECH Corp., San Diego, CA, August 1997.

41. Green, Robert E, "Machinery's Handbook 25th Edition," Industrial Press Inc., New York, 1996.

42. NUREG/CR-0481, SAND77-1872, "An assessment of Stress-Strain Data Suitable for Finite-Element Elastic-Plastic Analysis of Shipping Containers," Henry J. Rack & Gerald A. Knorosky, September 1978.

43. Biggs, J.M., Introduction to Structural Dynamics, McGraw-Hill, Inc., New York, 1964.

44. Boyer, H. E., Atlas of Stress-Strain Curves, ASM International, Metals Park, Ohio, 1987.

45. ACI 116R-90, "Cement and Concrete Technology," American Concrete Institute, 1990.

46. ACI 302.1R-89, "Guide for Concrete Floor and Slab Construction," American Concrete Institute, 1989.

47. Clough, R.W., and Joseph Penzien, "Dynamics of Structures," 2nd Edition, McGraw-Hill, Inc., New York, NY, 1993.

48. Rust, J. H., Nuclear Power Plant Engineering, Georgia Institute of Technology, 1979.

49. NUREG/CR-5009, "Assessment of the Use of Extended Burnup Fuel in Light Water Power Reactors," Battelle Pacific Northwest Labs, Richland, Washington, February 1988.

50. ISG-12, "Buckling of Irradiated Fuel Under Bottom End Drop Conditions," Interim Staff Guidance –12, Nuclear Regulatory Commission, June, 1999.

51. "Maine Yankee Atomic Power Company Specification for Independent Spent Fuel Storage Installation and Transport Facility," NAC Document 12412-DI-01, NAC International, Atlanta, Georgia.

52. Blake, Alexander, "Practical Stress Analysis in Engineering Design," 2nd Edition, Marcell Dekker, Inc., New York, 1990.

53. Young, Warren C., "Roark's Formulas for Stress & Strain," 6th Edition, McGraw-Hill, 1989.

54. "Fuel-Assembly Behavior Under Dynamic Impact Loads Due to Dry-Storage Cask Mishandling," EPRI NP-7419, ABB Combustion Engineering, Inc., Windsor, Connecticut, July 1991.

Appendix 12A
Table of Contents (Continued)

A 5.4 Radioactive Effluent Control Program 12A5-2
A 5.5 NAC-UMS® SYSTEM Transport Evaluation Program 12A5-3
A 5.6 Controls and Requirements for Fuel Cooldown in Opening a Loaded Canister 12A5-4
A 5.7 Verification of Oxide Layer Thickness on High Burnup Fuel 12A5-5

Table 12A5-1 TRANSFER CASK and CONCRETE CASK Lifting Requirements 12A5-6

THIS PAGE INTENTIONALLY LEFT BLANK

HIGH BURNUP FUEL	A fuel assembly having a burnup between 45,000 and 50,000 MWD/MTU, which must be preferentially loaded in periphery positions of the basket. An intact HIGH BURNUP FUEL assembly in which no more than 1% of the fuel rods in the assembly have a peak cladding oxide thickness greater than 80 microns, and in which no more than 3% of the fuel rods in the assembly have a peak oxide layer thickness greater than 70 microns, as determined by measurement and statistical analysis, may be stored as INTACT FUEL. HIGH BURNUP FUEL assemblies not meeting the cladding oxide thickness criteria for INTACT FUEL or that have an oxide layer that has become detached or spalled from the cladding is stored as DAMAGED FUEL.
FUEL DEBRIS	An intact or a partial fuel rod or an individual intact or partial fuel pellet not contained in a fuel rod. Fuel debris is inserted into a 9 x 9 array of tubes in a lattice that has approximately the same dimensions as a standard fuel assembly.
CONSOLIDATED FUEL	A nonstandard fuel configuration in which the individual fuel rods from one or more fuel assemblies are placed in a single container or a lattice structure that is similar to a fuel assembly. CONSOLIDATED FUEL is stored in a MAINE YANKEE FUEL CAN.

(continued)

SITE SPECIFIC FUEL	Spent fuel configurations that are unique to a site or reactor due to the addition of other components or reconfiguration of the fuel assembly at the site. It includes fuel assemblies, which hold nonfuel-bearing components, such as control components or instrument and plug thimbles, or which are modified as required by expediency in reactor operations, research and development or testing. Modification may consist of individual fuel rod removal, fuel rod replacement of similar or dissimilar material or enrichment, the installation, removal or replacement of burnable poison rods, or containerizing damaged fuel. Site specific fuel includes irradiated fuel assemblies designed with variable enrichments and/or axial blankets, fuel that is consolidated and fuel that exceeds design basis fuel parameters.
MAINE YANKEE FUEL CAN	A specially designed stainless steel screened can sized to hold INTACT FUEL, CONSOLIDATED FUEL or DAMAGED FUEL. The screens preclude the release of gross particulate from the can into the canister cavity.

A 5.5 NAC-UMS® SYSTEM Transport Evaluation Program

This program provides a means for evaluating various transport configurations and transport route conditions to ensure that the design basis drop limits are met. For lifting of the loaded TRANSFER CASK or CONCRETE CASK using devices, which are integral to a structure governed by 10 CFR Part 50 regulations, 10 CFR 50 requirements apply. This program is not applicable when the TRANSFER CASK or CONCRETE CASK is in the fuel building or is being handled by a device providing support from underneath (i.e., on a rail car, heavy haul trailer, air pads, etc.).

Pursuant to 10 CFR 72.212, this program shall evaluate the site specific transport route conditions.

a. The lift height above the ISFSI pad surface prescribed in Section B3.4.6 of Appendix B to Certificate of Compliance (CoC) No. 1015 shall not exceed the limits in Table A5-1. Also, the program shall ensure that the transport route conditions (i.e., surface hardness and pad thickness) are equivalent to or less limiting than those prescribed for the reference pad surface which forms the basis for the values cited in Section B3.4.6 of Appendix B to CoC No. 1015.

b. For site specific transport conditions which are not bounded by the surface characteristics in Section B3.4.6 of Appendix B to CoC No. 1015, the program may evaluate the site specific conditions to ensure that the impact loading due to design basis drop events does not exceed 60g. This alternative analysis shall be commensurate with the drop analyses described in the Safety Analysis Report for the NAC-UMS® SYSTEM. The program shall ensure that these alternative analyses are documented and controlled.

c. The TRANSFER CASK and CONCRETE CASK may be lifted to those heights necessary to perform cask handling operations, including CANISTER transfer, provided the lifts are made with structures and components designed in accordance with the criteria specified in Section B3.5 of Appendix B to CoC No. 1015, as applicable.

(continued)

A 5.6 Controls and Requirements for Fuel Cooldown in Opening a Loaded Canister

Cooldown requirements for UNLOADING a CANISTER installed in the TRANSFER CASK occur in two steps. The first step is assuring exterior cooling of the CANISTER while it is in the TRANSFER CASK. The second is interior, or fuel, cooling. The CANISTER is moved from the CONCRETE CASK in accordance with the requirements of the procedure provided in Section 8.2.

Prior to initiating CANISTER internal cooling, CANISTER exterior cooling must be accomplished in accordance with LCO 3.1.8. This LCO establishes that the time duration for holding the CANISTER in the TRANSFER CASK shall not exceed 4 hours for either the PWR or BWR configurations, without forced air cooling. However, once forced air cooling is established, the time duration for holding the CANISTER in the TRANSFER CASK for either the PWR or BWR configuration is not limited.

The loaded CANISTER is opened in accordance with the requirements of the unloading procedure for the CANISTER provided in Section 8.3. The procedure requires that spent fuel cooldown be accomplished using a nitrogen gas flush followed by a cooling water flow. These processes are administratively controlled to ensure satisfactory cooldown of the fuel and to ensure that internal pressure limits for the CANISTER are not exceeded.

Internal cooling of the CANISTER and fuel requires a nitrogen gas flush for a minimum of 10 minutes followed by a cooling water flow of 5 (+3, -0) gallons per minute at inlet pressure of 25 (+10, -0) psig. The minimum temperature of the water is 70°F. Once established, cooling water flow is maintained through the CANISTER until the outlet water temperature ≤ 200°F. During the cooling water flow period, the CANISTER pressure must be maintained less than or equal to 50 psig. The CANISTER internal pressure is maintained by control of the cooling water flow rate.

Once the CANISTER is full of water, with the outlet water temperature less than or equal to 200°F, the shield lid may be separated from the canister to allow access to the spent fuel.

A 5.7 Verification of Oxide Layer Thickness on High Burnup Fuel

A verification program is required to determine the oxide layer thickness on high burnup fuel by measurement or by statistical analysis. A fuel assembly having a burnup between 45,000 MWD/MTU and 50,000 MWD/MTU is classified as high burnup. The verification program shall be capable of classifying high burnup fuel as INTACT FUEL or DAMAGED FUEL based on the following criteria:

1. A HIGH BURNUP FUEL assembly may be stored as INTACT FUEL provided that no more than 1% of the fuel rods in the assembly have a peak cladding oxide thickness greater than 80 microns, and that no more than 3% of the fuel rods in the assembly have a peak oxide layer thickness greater than 70 microns, and that the fuel assembly is otherwise INTACT FUEL.

2. A HIGH BURNUP FUEL assembly not meeting the cladding oxide thickness criteria for INTACT FUEL or that has an oxide layer that is detached or spalled from the cladding is stored as DAMAGED FUEL.

A fuel assembly, having a burnup between 45,000 and 50,000 MWD/MTU, must be preferentially loaded in periphery positions of the basket.

Table 12A5-1 TRANSFER CASK and CONCRETE CASK Lifting Requirements

Item	Orientation	Lifting Height Limit
TRANSFER CASK	Horizontal	None Established
TRANSFER CASK	Vertical	None Established[1]
CONCRETE CASK	Horizontal	Not Permitted
CONCRETE CASK	Vertical	24 inches

Note:

1. See Technical Specification A 5.5 (c).