F2

TMI-1 OPERATOR TRAINING REQUALIFICATION PROGRAM

JOB PERFORMANCE MEASURE

POSITION: SRO/RO/AO

TITLE:	Shutdown Margin Calculation
TASK NUMBER:	0010040101
EVALUATION METHOD:	PERFORM: X SIMULATE:
EVALUATION LOCATION:	SIMULATOR: IN-PLANT: CONTROL ROOM: X
APPROXIMATE COMPLETION TIME:	Minutes: 20
IMPORTANCE RATING (TIF):	NRC 2.8 K/A 2.1.25 TMI 2.6
TOOLS AND EQUIPMENT:	Calculator and Ruler OP 1103-15A Rev. 28
EXAMINEE REFERENCES:	OP 1103-15A Shutdown Margin and Reactivity Balance Rev. 28
10CFR55.41:	(a)(10).

	SIGNATURE	DATE
Submitted By:	[signature]	11/22/99
Validated By:	[signature]	11-30-99
Reviewed by: Lead Instructor, Operator Training OR Lead Instructor, Simulator Training	[signature]	11/30/99
Operations Training Manager	[signature]	12/14/99
Approved By: Plant Operations Director	[signature]	12/17/99

SIMULATOR CONDITIONS: N/A

EXAMINER PREVIEW: The sequence of events which should be followed in the conduct of this JPM is as follows:

1. Read or otherwise inform the Examinee of the information contained in the "EXAMINEE PREVIEW" section of this JPM.
2. Inform the Examinee of the TASK CONDITIONS.
3. Begin the cueing sequence as described in the EXAMINER CUES section.

A certain amount of liberty (questioning or cueing beyond the bounds of the "EXAMINER CUES") may be taken by the Examiner in trying to extract the requisite information from the Examinee, however, care must be taken to ensure that you do not COACH the Examinee.

To complete this task successfully, the Examinee must complete each critical element (an element of the task which, if omitted or performed incorrectly, would result in a failure to meet the "TASK STANDARD") correctly.

TASK STANDARDS: Examinee Calculates the SDM within tolerances described within this JPM.

This sheet is available for the examinee to review

EXAMINEE PREVIEW:

For this event you are assigned the duties of the third CRO. The instructor/examiner will act as the SS.

When you are told to begin, you will respond to the cues or indications which the Examiner will provide to you either verbally or by the simulator.

TASK CONDITIONS:

The reactor is at 100% Power.

400 EFPD

Group 8 rod position: 30% WD

RCS Boron: 770 ppm

Boron Depletion factor: 1.0

PPC Xenon: -2.4% $\Delta k/k$

It has been determined that Group 7 Rod 4 is stuck at 92% WD and cannot be moved.

EXAMINER CUES	EXAMINEE ACTIONS	STANDARD
Instruct the examinee to calculate a Shutdown Margin for the current plant conditions. Examinee does not have to complete Enclosure 4 for this JPM. **NOTE:** Allowances Fig. 1 ± 0.1% Δk/k Fig. 2A ± 0.005%Δk/k Fig. 3 ± 0.25ppmB/%Δk/k Max Error ±0.355% Δk/k	*1. Examinee obtains a copy of OP 1103-15A and using Enclosure 1 calculates the SDM.	1. The examinee calculates the SDM within the allowable tolerances provided with this JPM. _____ SAT

JPM may be terminated after completion of calculation.

(*) Denotes Critical Element.

EVALUATION: SAT:_____ UNSAT:_____

JPM CHANGE HISTORY PAGE

REVISION	DATE	REFERENCE TITLE	DESCRIPTION (Include AI # if Appropriate)

K3

ENCLOSURE 1

Shutdown Margin Calculation Data Sheet

NOTE

Refer to attached Enclosure 1 Instructions to complete the Data Sheet.

I. CALCULATION IS FOR A SDM AT: DATE _____ TIME _____

1. TAVE (Assume TAVE = 532°F) 532 °F

2. CYCLE BURNUP 400 EFPD

3. a. MEASURED BORON CONCENTRATION 770 ppmB
   b. BORON DEPLETION CORRECTION FACTOR 1.0
   (NAS, Control Room Log, Nuclear Engineering)
   c. CORRECTED BORON CONCENTRATION (3a x 3b) = 770 ppmB

4. CONTROL ROD GROUP 8 POSITION 30 % WD

5. EXCESS REACTIVITY (FIG. 1) 5.1 % Δk/k

6. CRG 8 REACTIVITY WORTH (FIG. 2A) -0.122 % Δk/k

7. BORON REACTIVITY WORTH
   7a. HZP Inverse Boron Worth (FIG. 3) 135.6 ppmB/%Δk/k
   7b. Boron Worth
   [(ppmB)/(HZP Inverse Boron Worth)] * (-1) -5.68 % Δk/k
   #3c #7a

8. XENON REACTIVITY WORTH (PPC, Nuclear Engr, FIG. 4) -2.4 % Δk/k

9. SAMARIUM AND PLUTONIUM BUILDUP REACTIVITY WORTH (FIG. 5)
   9a. If shutdown: Time since last shutdown 0 HRS
   9b. Reactivity due to samarium and plutonium buildup 0 % Δk/k

10. INOPERABLE CONTROL RODS THAT ARE NOT FULLY INSERTED
    10a. No. of known inoperable rods (>0%WD) 1
    10b. Total inoperable rod worth (Enclosure 4) 1.43 % Δk/k
    (Figure 1 includes stuck rod as required by T.S.)

11. SHUTDOWN MARGIN
    EXCESS + CRG 8 + BORON + XENON + SAM + INOP ROD = -1.672 % Δk/k
    #5 #6 #7b #8 #9b #10b

CAUTION

Verification of shutdown margin more negative than –1% Δk/k **DOES NOT** imply 1% Δk/k subcriticality.

CALCULATED BY _____ DATE/TIME _____

ROVED (SRO) BY _____ DATE/TIME _____

Send to Operations Engineer for filing: Copy to Manager, Shift Engineering

TMI-1 OPERATOR TRAINING REQUALIFICATION PROGRAM

JOB PERFORMANCE MEASURE

POSITION: SRO/RO/AO

TITLE:	RCS PPC Computer Leak Rate Calculation
TASK NUMBER:	0020010201
EVALUATION METHOD:	PERFORM: X SIMULATE: ____
EVALUATION LOCATION:	SIMULATOR: X IN-PLANT: ____ CONTROL ROOM: ____
APPROXIMATE COMPLETION TIME:	Minutes: 70 Minutes
IMPORTANCE RATING (TIF):	TMI: RO 2.49 NRC K/A 2.1.19 RO 3.0
TOOLS AND EQUIPMENT:	Plant Process Computer
EXAMINEE REFERENCES:	1303-1.1 Reactor Coolant System Leak Rate Rev. 35
10CFR55.45:	(a)(12).

	SIGNATURE	DATE
Submitted By:		11/24/99
Validated By:		11/24/99
Reviewed by: Lead Instructor, Operator Training OR Lead Instructor, Simulator Training		11/24/99
Operations Training Manager		12/14/99
Approved By: Plant Operations Director		12/17/99

SIMULATOR CONDITIONS:

IC16 MOC
Set makeup tank level to obtain approximately 87" @ 33 psig using monitor point MUMMT = 28,000, immediately, MUT pressure should be approximately 33 psig

Insert Malfunction TH02A at 1% severity, immediately.

Turn on PPC Printer GPU Tag 17528

EXAMINER PREVIEW:

The sequence of events which should be followed in the conduct of this JPM is as follows:

1. Read or otherwise inform the Examinee of the information contained in the "EXAMINEE PREVIEW" section of this JPM.
2. Inform the Examinee of the TASK CONDITIONS.
3. Allow the Examinee 2-3 minutes to scan the Console.
4. Begin the cueing sequence as described in the EXAMINER CUES section.

A certain amount of liberty (questioning or cueing beyond the bounds of the "EXAMINER CUES") may be taken by the Examiner in trying to extract the requisite information from the Examinee, however, care must be taken to ensure that you do not COACH the Examinee.

To complete this task successfully, the Examinee must complete each critical element (an element of the task which, if omitted or performed incorrectly, would result in a failure to meet the "TASK STANDARD") correctly.

TASK STANDARDS:

Examinee successfully uses the PPC to enter a RCS leak rate and print the results with the RCS unidentified leak rate approximately 2.1 GPM. The examinee identifies that this leak rate value is in excess of Tech Spec limits (TS 3.1.6.2).

This sheet is available for the examinee to review

EXAMINEE PREVIEW:

For this event you are assigned the duties of the third CRO.
The instructor/examiner will act as the primary/secondary CRO and the SF.
The auxiliary instructor is available to act as Auxiliary Operators on the radio or page system.

When you are told to begin, you will respond to the cues or indications which the Examiner will provide to you either verbally or by the simulator.

You are to respond as you would in the plant for a real condition.

TASK CONDITIONS:

Plant is at 100% power MOC, with an unidentified RCS leak in containment.

EXAMINER CUES	EXAMINEE ACTIONS	STANDARD
As the Shift Foreman, direct the Examinee to enter an RCS leak rate into the PPC for a time length of 1 Hour using Automatic Mode and identify any leakage in excess of Tech Spec limits. Provide the examinee a copy of 1303-1.1 RCS Leak Rate if the examinee request.	1. The examinee obtains a copy of 1303-1.1 RCS Leak Rate.	1. Examinee obtains a copy of 1303-1.1 RCS Leak Rate.
	*2. At the PPC the examinee depresses the System Performance Calculation Menu Function on the CRT keypad.	2. A system performance calculation menu will appear on the CRT. _____ SAT
	*3. The examinee selects the Reactor Coolant Leak Rate Calculation by entering '1' in the area designated "Enter Area No.".	3. The RCS leak rate screen appears. _____ SAT
If the examinee identifies that the RCS leak rate should be entered for 2 hours, due to plant conditions the SS wants the RCS leak rate to be calculated for 1 hour.	*4. The examinee enters '1' hour for the time interval.	4. The examinee enters '1' hour for time limit. _____ SAT
If the examinee made an error in any entry he/she should be allowed to correct the error in accordance with the procedure "NOTE".	*5 The examinee tabs to position the cursor to the Call Back entry and enters '1' to select automatic mode and depresses Execute function key.	5. The examinee enters a '1' in the Call back entry and depresses execute function key. A message "Please Wait" will appear At the bottom of the CRT. _____ SAT

EXAMINER CUES	EXAMINEE ACTIONS	STANDARD
Option 1: If other JPMs are to be performed in the simulator, they should be performed while waiting for the RCS leak rate calculation. Option 2: If the examinee successfully entered the RCS leakrate proceed to step 7.		
If the examinee made an error in any entry, he/she should be allowed to correct the error in accordance with the procedure "NOTE".	6. At the end of the selected time interval the examinee will enter the following information and press the Execute function key. RCS/MUT Inventory Change: 0 Gal. RCDT change: 0 Lbm Identified Leak rate: 0 Lbm/Min OTSG Leak rate: 0 Lbm/Min	6. Using the Tab forward function key, repositions the cursor and enter the appropriate data in the correct field. RCS/MUT Inventory Change: 0 Gal. RCDT change: 0 Lbm Identified Leak rate: 0 Lbm/Min OTSG Leak rate: 0 Lbm/Min Examinee depresses the execute function key. The message "Hard Copy Being Made to the Line Printer" will appear on the CRT.
The examiner should provide the RCS leak rate results if option 2 was used in this JPM.	7. The examinee obtains a hard copy from the line printer for examiner to evaluate the results.	7. The examinee obtains a hard copy of the RCS leak rate. Unidentified RCS leak rate is approximately 2.1 GPM

EXAMINER CUES	EXAMINEE ACTIONS	STANDARD
As the SF, ask the examinee if the RCS leakage is in excess of any Tech Spec allowable leakage. Tech Spec Section No. is not required.	*8. Using Tech Specs, the examinee identifies that Tech Spec 3.1.6.2 Unidentified RCS leakage is in excess of 1 GPM.	8. The examinee identifies that the 2.1 GPM RCS leak rate is in excess of the Tech Spec limit for unidentified RCS leakage (1GPM) _____ SAT

After the examinee completes the leak rate and identifies that the leakage is in excess of the Tech Spec allowed limit the JPM may be terminated.

(*) Denotes Critical Element.

EVALUATION: SAT:_____ UNSAT:_____

JPM CHANGE HISTORY PAGE

REVISION	DATE	REFERENCE TITLE	DESCRIPTION (Include AI # if Appropriate)

THREE MILE ISLAND NUCLEAR STATION
UNIT NO. 1 SURVEILLANCE PROCEDURE 1303-1.1
REACTOR COOLANT SYSTEM LEAK RATE

D 11/24/1999
T 07:48:51

NOTE: YOU MUST ENTER A DECIMAL POINT WITH THE LEAKAGE VALUES.
IF RCS INVENTORY IS INCREASED THE DATA ENTRY MUST BE NEGATIVE.

SELECTED INTERVAL (1-8 HOURS):	1 HOURS	
ENTERED RCS OR MUT INVENTORY CHANGE FROM DATA SHEET 5		.000 GAL
ENTERED RCDT CHANGE FROM DATA SHEET 5		.000 LBM
ENTERED IDENTIFIED LEAK RATE FROM DATA SHEET 4		.000 LBM/MIN
ENTERED OSTG LEAKAGE FROM SP1301-1		.000 LBM/MIN

POINT ID:	A0510	A0508	A0513	A0509	C1720	A0426	A0835
POINT ID:	A0510	A0508	A0513	A0509	C1720	A0426	A0835

TIME	TCA (F)	THA (F)	TCB (F)	THB (F)	TAVE (F)	PRZR LVL (IN)	MUTK LVL (IN)	RCDT L (IN)
07:48:52	556.178	601.538	556.362	601.577	578.914	218.540	82.758	95.67
08:48:52	556.063	601.480	556.294	601.531	578.842	217.556	78.344	96.00

	RCDT LVL (IN)	MUTK LVL (IN)
MAX	96.021	82.886
MIN	95.695	78.042

LEAKAGE PLUS LOSSES (MUST BE LESS THAN 30 GPM) :	2.3131
T RCS LEAK RATE (MUST BE LESS THAN 10 GPM) :	2.1219
NET UNIDENTIFIED LEAK RATE (MUST BE LESS THAN 1 GPM) :	2.1219

OPERATOR: _____ DATE/TIME: _____

APPROVED: _____ DATE/TIME: _____

NOTE: ATTACH ALL APPROPRIATE DATA SHEETS

FRWD

THREE MILE ISLAND NUCLEAR STATION 11/24/99 08:58:25

UNIT NO. 1 SURVEILLANCE PROCEDURE 1303-1.1

REACTOR COOLANT SYSTEM LEAK RATE

SELECTED INTERVAL (1-8 HOURS):	1	HOURS
ENTERED RCS OR MUT INVENTORY CHANGE FROM DATA SHEET 5		.000
ENTERED RCDT CHANGE FROM DATA SHEET 5		.000
ENTERED IDENTIFIED LEAK RATE FROM DATA SHEET 4		.000
ENTERED OSTG LEAKAGE FROM SP1301-1		.000

TIME	TCA (F)	THA (F)	TCB (F)	THB (F)	TAVE (F)	PRZR LVL (IN)	MUTK LVL (IN)
POINT ID:	A0510	A0508	A0513	A0509		C1720	A0426
07:48:52	556.178	601.538	556.362	601.577	578.914	218.540	82.758
POINT ID:	A0510	A0508	A0513	A0509		C1720	A0426
08:48:52	556.063	601.480	556.294	601.531	578.842	217.556	78.344

TIME	RCDT LVL (IN)	RCS PRESS (PSIG)	RCDT LVL MAX/MIN (IN)		MUTK LVL MAX/MIN (IN)
POINT ID:	A0835	A0586	MAX	96.021	82.886
07:48:52	95.678	2155.46	MIN	95.695	78.042
POINT ID:	A0835	A0586			
08:48:52	96.006	2158.11			

LEAKAGE PLUS LOSSES (MUST BE LESS THAN 30 GPM) :	2.3131
TOTAL RCS LEAK RATE (MUST BE LESS THAN 10 GPM) :	2.1219
NET UNIDENTIFIED LEAK RATE (MUST BE LESS THAN 1 GPM) :	2.1219

HARD COPY BEING MADE TO LINE PRINTER IF COPY COMPLETE CANCEL ELSE EXECUTE
DONE

TMI-1 OPERATOR TRAINING REQUALIFICATION PROGRAM

JOB PERFORMANCE MEASURE

POSITION: SRO/RO/AO

TITLE:	Verification of Emergency Diesel ES Standby
TASK NUMBER:	0640010101
EVALUATION METHOD:	PERFORM: X SIMULATE: ____
EVALUATION LOCATION:	SIMULATOR: X IN-PLANT: ____ CONTROL ROOM: ____
APPROXIMATE COMPLETION TIME:	15 Minutes
IMPORTANCE RATING (TIF):	TMI: RO 2.61 NRC: K/A 2.2.12, RO 3.0
TOOLS AND EQUIPMENT:	None
EXAMINEE REFERENCES:	Surveillance Procedure 1303-4.16 Emergency Power System Rev. 84
10CFR55.	(a)(41.10, 45.13).

	SIGNATURE	DATE
Submitted By:		11/29/99
Validated By:		12/6/99
Reviewed by: Lead Instructor, Operator Training OR Lead Instructor, Simulator Training		12/6/99
Operations Training Manager		12/1/99
Approved By: Plant Operations Director		12/17/99

SIMULATOR CONDITIONS:

IC 86 or any 100% Power IC

EDG 1A is shutdown following a 1 hour surveillance run.

Verify Remote Functions:

EGR07 Speed Droop @ 70%

EGR09 Unit/Parallel selected to Parallel

EGR28 Fuel Rack - Tripped

EGR05 Exciter – Norm

Verify Panel Controls:

Manual Voltage Control @ 0

Starting Switch in Manual

Exciter in Manual

EXAMINER PREVIEW:

The sequence of events which should be followed in the conduct of this JPM is as follows:

1. Read or otherwise inform the Examinee of the information contained in the "EXAMINEE PREVIEW" section of this JPM.
2. Inform the Examinee of the TASK CONDITIONS.
3. Allow the Examinee 2-3 minutes to scan the Console.
4. Begin the cueing sequence as described in the EXAMINER CUES section.

A certain amount of liberty (questioning or cueing beyond the bounds of the "EXAMINER CUES") may be taken by the Examiner in trying to extract the requisite information from the Examinee, however, care must be taken to ensure that you do not COACH the Examinee.

To complete this task successfully, the Examinee must complete each critical element (an element of the task which, if omitted or performed incorrectly, would result in a failure to meet the "TASK STANDARD") correctly.

TASK STANDARDS:

EDG 1A is in ES standby IAW 1303-4.16, Emergency Power System

This sheet is available for the examinee to review

EXAMINEE PREVIEW:

For this event you are assigned the duties of the Primary CRO. The instructor/examiner will act as the Secondary CRO and the SF. The auxiliary instructor is available to act as Auxiliary Operators on the radio or page system.

When you are told to begin, you will respond to the cues or indications which the Examiner will provide to you either verbally or by the simulator.

You are to respond as you would in the plant for a real condition.

TASK CONDITIONS:

EDG 1A has just completed a 1 hour test run and must be placed in ES standby.

EXAMINER CUES	EXAMINEE ACTIONS	STANDARD
As the SF direct the examinee to place EDG-1A into ES standby IAW 1303-4.16 Emergency Power System, Section 8.5 As applicable in-plant steps have already been completed as noted by initials on appropriate steps.	*1, Examinee verifies in the control room the following switch positions or settings: Exciter switch: AUTO Generator Manual Voltage Controller set at 45%. Starting Switch: AUTO	1. Exciter Switch indicates AUTO Generator Manual Voltage Controller is at 45% Starting Switch is in AUTO. The speed control idle lamp goes out and in approximately 3 minutes, the speed control High Lamp goes 'on'. _____ SAT
ICO: Using Remote Functions EGR07 Speed Droop to 0 EGR09 Unit/Parallel to Unit. After completion notify the control room that you and another AO have verified required positions.	*2. The examinee directs the Aux operator to position the SPEED DROOP to 0% and the UNIT/PARALLEL switch to UNIT.	1. The examinee directs the Aux operator to position the following: Speed droop to 0% Unit/Parallel Switch to Unit. _____ SAT
Note: Examiner may sign as independent verifier for these steps.	*3. The examinee verifies the following: U-1 Diesel Fuel Tank Full Light, 'on'. Govenor Speed Control "HIGH" Lamp 'on'.	3. The examinee verifies the following on CR: U-1 Diesel Fuel Tank Full Light, 'on'. Govenor Speed Control "HIGH" Lamp 'on'. _____ SAT

EXAMINER CUES	EXAMINEE ACTIONS	STANDARD
The ICO, when directed by the examinee, performs the following: a. Using Remote Function EGR28, Reset the fuel racks. b. Simulate depressing the Exciter RESET PB. c. Using remote Function EGR05 RESET Exciter. d. Simulate SDR & 5A Relay are de-energized. e. Using remote function ANR02 Reset/Clear local alarms.	*4. The examinee has the Aux Operator at the diesel perform the following steps: a. Reset the fuel rack. b. Depress the Exciter RESET pushbutton at the EMMSB. c. Depress the RESET Pushbutton at the EMIP. d. Verify the SDR & 5A relays are de-energized. e. Verify local alarms are clear.	4. The examinee in communications has the Aux Operator performs the following steps: a. Reset the fuel rack. b. Depress the Exciter RESET pushbutton at the EMMSB. c. Depress the RESET Pushbutton at the EMIP, and reset A-2-1. d. Verify the SDR & 5A relays are de-energized. e. Verify local alarms are clear. _____ SAT
Examiner: If steps performed correctly, you may initial steps for independent verification.	*5 The examinee verifies the following alarms are clear: Diesel Gen 1A Trouble(A-1-2) Diesel Gen 1A Blocked(A-2-1) Diesel Gen Bkr Trip(A-1-3)	5. The examinee verifies the following alarms are clear Main Annunciator Panel A Diesel Gen 1A Trouble Diesel Gen 1A Blocked Diesel Gen Bkr Trip _____ SAT
	*6. The examinee verifies the following computer alarms are clear: L2428 Diesel Fuel Tank Storage Tank Level MIN. L2429 Diesel Fuel Inventory below MIN.	6. The examinee verifies the following computer alarms are clear: L2428 Diesel Fuel Tank Storage Tank Level MIN. L2429 Diesel Fuel Inventory below MIN. _____ SAT

EXAMINER CUES	EXAMINEE ACTIONS	STANDARD
	7. The examinee notifies the SF that the surveillance is complete.	7. The examinee notifies the SF that the EDG surveillance is complete IAW 1303-4.16 Declare EG-Y-1A Operable. Terminate Respective time clocks. Make appropriate closeout logbook entries.

After the SF is notified the JPM may be terminated.

(*) Denotes Critical Element.

EVALUATION: SAT:_____ UNSAT:_____

JPM CHANGE HISTORY PAGE

REVISION	DATE	REFERENCE TITLE	DESCRIPTION (Include AI # if Appropriate)

TMI-1 OPERATOR TRAINING REQUALIFICATION PROGRAM

JOB PERFORMANCE MEASURE

POSITION: SRO/RO/AO

TITLE:	Conduct Equipment Tagout in a High Radiation Area
TASK NUMBER:	1190120301
EVALUATION METHOD:	PERFORM:_____ SIMULATE:___X___
EVALUATION LOCATION:	SIMULATOR:_____ IN-PLANT:___X___ CONTROL ROOM:_____
APPROXIMATE COMPLETION TIME:	Minutes: 15
IMPORTANCE RATING (TIF):	NRC K/A 2.3.1 RO 2.6 TMI 3.86
TOOLS AND EQUIPMENT:	TLD, Simulated Tags and Switching Order
EXAMINEE REFERENCES:	AP 1002, Switching Order
10CFR55.41:	(a)(12).

	SIGNATURE	DATE
Submitted By:		12/14/99
Validated By:		12/15/99
Reviewed by: Lead Instructor, Operator Training OR Lead Instructor, Simulator Training		12/15/99
Operations Training Manager		12/17/99
Approved By: Plant Operations Director		12/17/99

SIMULATOR CONDITIONS: N/A

EXAMINER PREVIEW:

This task deals with the requirement to hang safety tags on components within a locked high radiation area per AP 1002, taking ALARA concerns into consideration.

The sequence of events which should be followed in the conduct of this JPM is as follows:

1. Read or otherwise inform the Examinee of the information contained in the "EXAMINEE PREVIEW" section of this JPM.
2. Inform the Examinee of the TASK CONDITIONS.
3. Begin the cueing sequence as described in the EXAMINER CUES section.

A certain amount of liberty (questioning or cueing beyond the bounds of the "EXAMINER CUES") may be taken by the Examiner in trying to extract the requisite information from the Examinee, however, care must be taken to ensure that you do not COACH the Examinee.

To complete this task successfully, the Examinee must complete each critical element (an element of the task which, if omitted or performed incorrectly, would result in a failure to meet the "TASK STANDARD") correctly.

For In-Plant JPMs additional safety gear may be required. The Examinee should inform the Examiner that additional gear is required. The Examiner will then specify if the additional safety gear is to be donned, or to be simulated after the Examinee specifies what equipment is required and where it would be located.

Failure to use the proper safety equipment is immediate grounds for failure.

TASK STANDARDS: The examinee properly hangs red tags for components in a High Rad area IAW AP 1002 Switching & Tagging. This procedure allows tags to be hung on outside entrance of Locked High Rad Area when the prerequisites are met.

This sheet is available for the examinee to review

EXAMINEE PREVIEW:

You are to respond as you would in the plant for a real condition.

For this event you are assigned the duties of the Extra CRO. The instructor/examiner will act as the Console CRO and the SF.

When you are told to begin, you will respond to the cues or indications which the Examiner will provide to you verbally.

Unless otherwise informed, you are to **SIMULATE** all actions taken.

You are expected to maintain proper communications with the Control Room as you would in the plant for a real condition.

It is very important that you describe to the instructor/examiner the physical details of the actions that you would be taking if you were actually performing the manipulations required to complete this task. Failure to adequately describe your actions could result in a failure to meet the task standard.

You are to respond as you would in the plant for a real condition.

You are expected to wear all required safety gear in accordance with plant procedures and policies. If during a simulated task additional safety gear is required you should notify the Examiner.

Failure to use the proper safety equipment is immediate grounds for failure.

TASK CONDITIONS:

You are assigned the task of completing a switching order on valves located in the Makeup Pre-filter Enclosure.

EXAMINER CUES	EXAMINEE ACTIONS	STANDARD
As the duty Shift Foreman, direct the examinee to carry out the assigned switching order. Provide the following information: CUE: The valves are located in a Locked High Rad Area and you have permission to hang tags outside the area IAW 1002.	1. In the Control Room, the examinee accepts the task of performing a switching order.	1. Examinee accepts and reviews the switching order.
CUE: If examinee asks for confirmed position of the valves as required by 1002, inform examinee that the valves on the switching order have been confirmed CLOSED.	The examinee may refer to AP 1002 to ascertain if the requirements for affixing tags to components in a High Rad Area are met.	Examinee ascertains that the valves on the switching order have been confirmed to be CLOSED as required by the switching order and AP 1002.
NOTE: A change in plant conditions may require an RWP for this area (281' elevation of Fuel Handling Building, Makeup Pre-filter and Laundry Waste Tank area, and the examinee should sign on the RWP IAW Rad Con procedures.	2. The examinee reports to the HP Control Point in the Auxiliary Building. If an RWP is required, the examinee signs on the RWP IAW TMI Rad Con procedures.	2. Examinee determined if an RWP is required for the area in which he/she is required to hang tags. If required, the examinee signs on the RWP.
	3. The examinee proceeds with switching order and tags to the MU Pre-filter cubicle, 281' elevation of Fuel Handling Building.	3. Examinee is at the gate to MU Pre-filter cubicle. (Across from Laundry Waste Storage Tank)
	*4. The examinee completes the required information on the red tags: OPR and TIME.	4. Examinee name and time are filled in on the two red tags. _____ SAT

EXAMINER CUES	EXAMINEE ACTIONS	STANDARD
CUE: If the examinee ask if adequate indications of equipment exist for placing the tags on the gate, answer in the affirmative.	*5. The examinee affixes the two red tags to the enclosure (gate) at the entrance of the MU Pre-filter cubicle.	5. The two red tags are conspicuously affixed on the gate (entrance) to the Makeup Pre-Filter cubicle. _____ SAT
NOTE: The examinee is not required to report to control room to sign off switching order.	6. The examinee notifies the Control Room that the Switching Order has been completed.	6. Control Room is notified that the switching order has been completed.
When the Control Room is notified of switching order completion, the JPM may be terminated. **EXAMINER: IMMEDIATLEY REMOVE TAGS FROM GATE**	(*) Denotes Critical Element.	

EVALUATION: SAT:_____ UNSAT:_____

JPM CHANGE HISTORY PAGE

REVISION	DATE	REFERENCE TITLE	DESCRIPTION (Include AI # if Appropriate)

TMI SWITCHING ORDER

STATION TMI (FOR EXAM PURPOSES ONLY)

ORDER NO. 2000 - 0001 DATE Today

ORDER OF SWITCHING

Grounding Device Location: N/A

Restoratin only. are grounding devices removed? ☐ Yes _____ Initial ☐ No _____ Initial

1	RED TAGGED CLOSED MU-V-199B INLET ISOLATION TO MU-F-2B
2	RED TAGGED CLOSED MU-V-200B OUTLET ISOLATION TO MU-F-2B
3	
4	
5	
6	
7	
8	
9	
10	
11	
12	
13	
14	

Order written by John CRO (Signature) NOW (Time)

* Order verfied by _____ (Signature) _____ (Time)

Switching executed by _____ (Signature) _____ (Time Completed)

* Switching verified by _____ (Signature) _____ (Time Completed)

* For ES or EF related restorations to service only

N2056 (02-95)

FOR EXAM PURPOSES ONLY

STATION TMI DATE TODAY

TAGGED FOR Joe Mechanic AT _____ HRS.

OPR. _____ ORDERED ON BY John CRO

DEVICE NUMBER OR NAME MU-V-200B

POSITION OF DEVICE OPEN ☐ CLOSED ☒

OFF AT _____ HRS. DATE _____

OPR. _____ ORDERED OFF BY _____

RED TAG

FOR EXAM PURPOSES ONLY

STATION TMI DATE TODAY

TAGGED FOR Joe Mechanic AT _____ HRS.

OPR. _____ ORDERED ON BY John CRO

DEVICE NUMBER OR NAME MU-V-199B

POSITION OF DEVICE OPEN ☐ CLOSED ☒

OFF AT _____ HRS. DATE _____

OPR. _____ ORDERED OFF BY _____

RED TAG

TMI-1 OPERATOR TRAINING REQUALIFICATION PROGRAM

JOB PERFORMANCE MEASURE - TIME CRITICAL

POSITION: SRO/RO/AO

TITLE:	Emergency Notifications and Call Outs
TASK NUMBER:	5010045003
EVALUATION METHOD:	PERFORM:_____ SIMULATE:__X__
EVALUATION LOCATION:	SIMULATOR:__X__ IN-PLANT:_____ CONTROL ROOM:_____
APPROXIMATE COMPLETION TIME:	Minutes: 15
IMPORTANCE RATING (TIF):	NRC: K/A 2.4.43 RO 2.8 TMI: RO 2.9
TOOLS AND EQUIPMENT:	EP Pager Call Out Phone Notification Line ENS Telephone
EXAMINEE REFERENCES:	EPIP-TMI-03 Emergency Notification and Call Outs
10CFR55.45:	(a)(13).

	SIGNATURE	DATE
Submitted By:	Fred Mancuso	12/1/99
Validated By:	D Witt	12/6/99
Reviewed by: Lead Instructor, Operator Training OR Lead Instructor, Simulator Training	Fred Mancuso	12/6/99
Operations Training Manager	R L Pannella	12/14/99
Approved By: Plant Operations Director	D Wilson	12/17/99

SIMULATOR CONDITIONS: N/A

EXAMINER PREVIEW:

The sequence of events which should be followed in the conduct of this JPM is as follows:

1. Read or otherwise inform the Examinee of the information contained in the "EXAMINEE PREVIEW" section of this JPM.
2. Inform the Examinee of the TASK CONDITIONS.
3. Begin the cueing sequence as described in the EXAMINER CUES section.

A certain amount of liberty (questioning or cueing beyond the bounds of the "EXAMINER CUES") may be taken by the Examiner in trying to extract the requisite information from the Examinee, however, care must be taken to ensure that you do not COACH the Examinee.

To complete this task successfully, the Examinee must complete each critical element (an element of the task which, if omitted or performed incorrectly, would result in a failure to meet the "TASK STANDARD") correctly.

TASK STANDARDS: Perform all emergency notifications Per EPIP-TMI-.03, Exhibit 2, ALERT Checklist. Exhibit 2, Step 3 must be completed within 15 minutes of event declaration.

This sheet is available for the examinee to review

EXAMINEE PREVIEW:

For this event you are assigned the duties of the third CRO.
The instructor/examiner will act as the Emergency Director.
The auxiliary instructor is available to act as Auxiliary Operators on the radio or page system.

When you are told to begin, you will respond to the cues or indications which the Examiner will provide to you either verbally or by the simulator.

You are to respond as you would in the plant for a real condition.

TASK CONDITIONS:

An ALERT was declared due to a Security Event A7.1, Bomb discovered inside the Vital Area, at TMI.

Emergency Notifications are required to be performed.

You are the On-shift ECC Communication Coordinator.

EXAMINER CUES	EXAMINEE ACTIONS	STANDARD
As the Emergency Director give the examinee the Emergency Report Form part 1 and 2. Direct the examinee to make the required emergency notifications per EPIP-TMI-.03. Give the examinee a copy of the procedure.	1. The examinee obtains the Emergency Report Form Part 1 and 2 and proceeds to the SS office.	1. The examinee, with Emergency Report Form Parts 1 and 2, reports to the Simulator SS office, behind H&V panel. _____ SAT
2. As examiner provide the following CUES: a. Dial tone is heard. b. After the examinee pushes the GROUP PAGE button inform the examinee he hears: ***"Please enter your caller password"***. c. After the examinee enters LEVEL 2, wait 15 seconds and inform the examinee he hears: ***"Thank You"***.	*2. The examinee activates the group pagers.	2. The examinee activates the group pagers. a. Lifts the EP Pager Call Out Phone Receiver. b. Examinee pushes the GROUP PAGE button. c. The examinee hears ***"Please Enter your caller password"***, and presses the designated LEVEL button, LEVEL 2. d. After the examinee hears the voice prompt "Thank You", he/she hangs up. _____ SAT
3. Examiner: If the examinee performs the step correctly provide the following CUES: Dial tone is present.	*3. Examinee performs the 15 minute notifications.	3. Examinee picks up the Notification Line and confirms a dial tone.

EXAMINER CUES	EXAMINEE ACTIONS	STANDARD
a. Toggle Switch is on 'OVERRIDE'.		a. Examinee moves Toggle Switch UP to OVERRIDE. _____SAT
a. Calling tone is heard.		b. Examinee Dials "91" _____ SAT
b. Toggle Switch is 'NORMAL'.		c. After the examinee hears the calling tone, he/she places Toggle Switch down to NORMAL. _____ SAT
c. Hello this is: (Answer as appropriate.) PEMA Dauphin County Cumberland County Lancaster County Lebanon County York County		d. As the agencies answer the examinee states: ***"This is Three Mile Island Nuclear Station, Standby for an emergency message."*** _____ SAT
d. Repeat above (d.) as necessary.		e. The examinee ask each agency if it is on the line and checks each off in the procedure. _____ SAT
		f. After the examinee verifies each agency is on the line, he/she states: ***" Please stay on the line after the following message to provide a name or dispatcher number and to confirm receipt".*** _____ SAT

EXAMINER CUES	EXAMINEE ACTIONS	STANDARD
		g. The examinee reads "Emergency Report Form Part 1 and enters time when notification is completed. _____ SAT
h. As asked respond as follows: PEMA: No. 100 Dauphin No. 101 Cumberland No. 102 Lancaster No. 103 Lebanon No. 104 York No. 105		h. The examinee request confirmation Name or Number) from: PEMA Dauphin County Cumberland County Lancaster County Lebanon County York County _____ SAT
i. Inform examinee dial tone is heard.		i. The examinee: Flash the Hook Switch until a dial tone is heard and hangs up.
As the examiner, play the part of an ECC Communicator and accept Part 2 of the Emergency Report Form and you are performing Exhibit 9.	*4. Examinee directs an ECC communicator to perform Exhibit 9 of this procedure and provide Part 2 of the Emergency Report Form.	4. The examinee directs an ECC communicator to perform Exhibit 9 of this procedure and provides him Part 2 of the Emergency Report Form. _____ SAT
Examiner: Examinee may simulate this step.	5. The examinee pins on the ECC Communication Coordinator Button	5. The examinee pins on the ECC Communication Coordinator Button
Examiner CUE: As the STA ERDS has been activated.	*6. The examinee verifies ERDS activation.	6. The examinee verifies activation of ERDS by the Shift Engineer. _____ SAT

EXAMINER CUES	EXAMINEE ACTIONS	STANDARD
Examiner: As the examinee successfully complete each step provide the following CUES: a. Dial tone and the phone has been successfully dialed. ***"Hello this is the NRC Emergency Notification Line", Mr. Robert Nelson.*** b. NRC Listens and acknowledges report. c. If requested provide the name of the NRC contact. Mr Robert Nelson.	*7. The examinee notifies the NRC using the Emergency Notification System (ENS) in the SS office or Control Room. (Simulator)	7. The examinee informs the NRC using the ENS by: a. Dialing the ten digit number attached on the ENS telephone. _____ SAT b. Examinee reads the Emergency Report Form. _____ SAT c. Examinee records the person contacted in the procedure. _____ SAT d. Examinee remains on the line with the NRC. _____ SAT

After the examinee has notified the NRC the JPM may be terminated.

(*) Denotes Critical Element.

EVALUATION: SAT:_____ UNSAT:_____

JPM CHANGE HISTORY PAGE

REVISION	DATE	REFERENCE TITLE	DESCRIPTION (Include AI # if Appropriate)

TMI-1 OPERATOR TRAINING REQUALIFICATION PROGRAM

JOB PERFORMANCE MEASURE – ALTERNATE PATH

POSITION: SRO/RO

TITLE:	Perform a Safety Group Withdrawal
TASK NUMBER:	0010180101
EVALUATION METHOD:	PERFORM: X SIMULATE:
EVALUATION LOCATION:	SIMULATOR: X IN-PLANT: CONTROL ROOM:
APPROXIMATE COMPLETION TIME:	25 Minutes
IMPORTANCE RATING (TIF):	TMI=2.84 NRC=3.4 K4.13
TOOLS AND EQUIPMENT:	None
EXAMINEE REFERENCES:	OP 1105-9 (sections 3.2.2, 3.2.3, and 3.2.5 attached for examiner)
10CFR55.45:	(a)(1), (3), (12).

	SIGNATURE	DATE
Submitted By:		10/8/99
Validated By:		10/8/99
Reviewed by: Lead Instructor, Operator Training OR Lead Instructor, Simulator Training		10/18/99
Operations Training Manager		10/19/99
Approved By: Plant Operations Director		12/3/99

SIMULATOR CONDITIONS:

IC05 Hot Shutdown, MOC, no xenon

On RPPC center console monitor, display Group 10, Area .

On CRD panel, turn GROUP POSITION SELECTOR switch to SAFETY.

Transfer CRG-4 to auxiliary power supply and insert CRG-4 to 75%.

Event Trigger #1: RDSGP(4)>0.95, Event Command: imf RD0201.

Event Trigger #2: RDSGP(4)>0.98, Event Command: dmf RD0201.

EXAMINER PREVIEW:

This task deals with performing safety group-4 withdrawal from 75% to its group out-limit to establish conditions necessary for reactor startup. It is considered an alternate path JPM because one rod in group-4 will NOT reach its individual out limit, requiring alternate actions delineated in 1105-9 to obtain the individual rod out limit.

Obtain current revision of 1105-9 sections 3.2.2, 3.2.3, and 3.2.5 for reference during the JPM.

The sequence of events which should be followed in the conduct of this JPM is as follows:

1. Read or otherwise inform the Examinee of the information contained in the "EXAMINEE PREVIEW" section of this JPM.
2. Inform the Examinee of the TASK CONDITIONS.
3. Allow the Examinee 2-3 minutes to scan the Console.
4. Begin the cueing sequence as described in the EXAMINER CUES section.

A certain amount of liberty (questioning or cueing beyond the bounds of the "EXAMINER CUES") may be taken by the Examiner in trying to extract the requisite information from the Examinee, however, care must be taken to ensure that you do not COACH the Examinee.

To complete this task successfully, the Examinee must complete each critical element (an element of the task which, if omitted or performed incorrectly, would result in a failure to meet the "TASK STANDARD") correctly.

TASK STANDARDS:

Safety group-4 at group out limit (red lamp on CRD panel) and all eight group-4 rods at individual rod out limits (red lamps on PI panel), and all eight group-4 rods on the hold bus (none on auxiliary power supply).

This sheet is available for the examinee to review

EXAMINEE PREVIEW:

For this event you are assigned the duties of the primary CRO.

The instructor/examiner will act as the shift foreman, secondary CRO, and STA.

The auxiliary instructor is available to act as Auxiliary Operators on the radio or page system.

When you are told to begin, you will respond to the cues or indications which the Examiner will provide to you either verbally or by the simulator.

You are to respond as you would in the plant for a real condition.

TASK CONDITIONS:

The plant is at hot shutdown, 300 EFPD, no xenon.

RCS boron is 1600 ppm

Preparations are in progress for plant restart following a turbine trip and reactor trip from 100% power four days ago.

Control rod safety groups 1,2, and 3 are fully withdrawn.

Control rod safety group 4 is currently 75% withdrawn on the auxiliary power supply, awaiting results of 1/M plot for which stable counts has already been obtained.

Your task will be to complete safety group 4 withdrawal to its full out position, and then transfer group 4 back to the DC hold bus per 1105-9.

EXAMINER CUES	EXAMINEE ACTIONS	STANDARD
As the Shift Foreman, inform examinee that redundant 1/M plots indicate it is safe to pull control rod group-4 (CRG-4) to 100%. Direct examinee to withdraw CRG-4 to 100%, then transfer CRG-4 back to the DC hold bus.	1. Examinee reviews 1105-9 section 3.2.5 to determine current applicable step.	1. Examinee has found current place in 1105-9 as evidenced by his/her report that CRG-4 will be withdrawn.
	*2. Examinee manipulates CRD panel control handle to WITHDRAW position and monitors CRG-4 position meter on CC, PI panel on PC, and computer to verify out motion.	2. CRG-4 is withdrawing as evidenced by increasing CRG-4 position on CC, PC, and computer. _____ SAT
	3. Examinee monitors source range nuclear instruments, NI-11 and 12, as positive reactivity is added by CRG-4.	3. Source range NI's being monitored during CRG-4 withdrawal as evidenced by examinee actions.
	*4. Examinee withdraws CRG-4 to 100% then releases CRD control handle to neutral position when CRG-4 red OUT LIMIT lamp is illuminated on CRD panel.	4. CRG-4 is at its out limit as indicated by the red CRG-4 OUT LIMIT lamp illuminated on CRD panel. _____ SAT
As Shift Foreman, acknowledge any report from examinee concerning rod positions and/or lamp status.	*5. Examinee checks PI panel on PC for all eight CRG-4 red OUT LIMIT lamps on, and recognizes that rod 4-4 OUT LIMIT lamp is off.	5. Rod 4-4 recognized as not at its individual out limit on PI panel, as evidenced by report from examinee. _____ SAT
	6. Examinee performs a lamp check of red OUT LIMIT lamps on PI panel, by depressing the white OUT LIMIT lamp check button on top left of PI panel.	6. All PI panel red OUT LIMIT lamps checked good as evidenced by all 69 red lamps illuminating when OUT LIMIT lamp check button is depressed.

EXAMINER CUES	EXAMINEE ACTIONS	STANDARD
	7. Examinee selects JOG on SPEED SELECTOR switch on CRD panel.	7. CRD speed selector switch on CRD panel in JOG position.
	*8. Examinee inserts CRG-4 by manipulating CRD control handle forward to INSERT position until red CRG-4 OUT LIMIT lamp on CRD panel goes off, and then releases CRD control handle prior to CRG-4 individual rod OUT LIMIT lamps on PI panel going off except rod 4-4.	8. CRG-4 OUT LIMIT lamp on CRD panel is off, and all CRG-4 individual rod OUT LIMIT lamps on PI panel are still on except rod 4-4. _____ SAT
Refer to attached section 3.2.3 of 1105-9 for actions to transfer CRG-4 back to its hold bus.	*9. Examinee transfers CRG-4 back to its hold bus per section 3.2.3 of 1105-9 (attached).	9. All CRG-4 rods are on hold bus as evidenced by: white TR CF and CRG-4 CONTROL ON lamps on CRD panel off, and all eight CRG-4 white CONTROL ON lamps on PI panel are off. _____ SAT
Refer to attached section 3.2.2 of 1105-9 for actions to transfer control rod 4-4 to the auxiliary power supply.	*10. Examinee transfers control rod 4-4 only to the auxiliary power supply per section 3.2.2 of 1105-9 (attached).	10. Control rod 4-4 is on auxiliary power supply as evidenced by: GROUP SELECT SWITCH on CRD panel selected to CRG-4, SINGLE SELECT SWITCH on CRD panel selected to rod 4, white TR CF and CRG-4 CONTROL ON lamps on CRD panel are on, and control rod 4-4 white CONTROL ON lamp on PI panel is on. _____ SAT
	11. Examinee selects JOG on SPEED SELECTOR switch on CRD panel.	11. CRD speed selector switch on CRD panel in JOG position.

EXAMINER CUES	EXAMINEE ACTIONS	STANDARD
	*12. Examinee withdraws rod 4-4 by manipulating CRD control handle to WITHDRAW position until rod 4-4 red OUT LIMIT lamp on PI panel comes on, then releases CRD control handle to vertical neutral position prior to obtaining CRG-4 red OUT LIMIT lamp on CRD panel.	12. Control rod 4-4 is at its individual out limit as evidenced by rod 4-4 red OUT LIMIT lamp on PI panel on. _____ SAT
Refer to attached section 3.2.3 of 1105-9 for actions to transfer rod 4-4 back to its hold bus.	*13. Examinee transfers rod 4-4 back to the hold bus per section 3.2.3 of 1105-9 (attached).	13. All CRG-4 rods are on hold bus as evidenced by: white TR CF and CRG-4 CONTROL ON lamps on CRD panel off, and all eight white CRG-4 rod CONTROL ON lamps on PI panel are off. _____ SAT
Refer to attached section 3.2.2 of 1105-9 for actions to transfer CRG-4 to the auxiliary power supply.	*14. Examinee transfers CRG-4 to the auxiliary power supply per section 3.2.2 of 1105-9 (attached).	14. All eight CRG-4 rods on auxiliary power supply as evidenced by: GROUP SELECT SWITCH on CRD panel selected to CRG-4, SINGLE SELECT SWITCH on CRD panel selected to ALL, white TR CF and CRG-4 CONTROL ON lamps on CRD panel are on, and all eight CRG-4 white CONTROL ON lamps on PI panel are on. _____ SAT
	15. Examinee selects RUN on SPEED SELECTOR switch on CRD panel.	15. CRD speed selector switch on CRD panel in RUN position.

EXAMINER CUES	EXAMINEE ACTIONS	STANDARD
	*16. Examinee withdraws CRG-4 to 100% by manipulating CRD control handle to WITHDRAW position, then releases CRD control handle to neutral position when CRG-4 red OUT LIMIT lamp is illuminated on CRD panel.	16. CRG-4 is at its out limit as indicated by the red CRG-4 OUT LIMIT lamp illuminated on CRD panel, and all eight CRG-4 rods are at their individual out limits as indicated by all eight CRG-4 red OUT LIMIT lamps illuminated on PI panel. _____ SAT
Refer to attached section 3.2.3 of 1105-9 for actions to transfer CRG-4 back to its hold bus.	*17. Examinee transfers CRG-4 back to its hold bus per section 3.2.3 of 1105-9 (attached).	17. All CRG-4 rods are on hold bus as evidenced by: white TR CF and CRG-4 CONTROL ON lamps on CRD panel off, and all eight CRG-4 white CONTROL ON lamps on PI panel are off. _____ SAT
If examinee inquires about final status of CRD panel, as Shift Foreman direct examinee to leave CRD panel in manual.	18. Examinee leaves CRD panel in manual mode following transfer of CRG-4 back to hold bus.	18. CRD panel in manual mode as indicated on CRD panel by white MAN lamp on and red AUTO lamp off.

(*) Denotes Critical Element.

EVALUATION: SAT:_____ UNSAT:_____

JPM CHANGE HISTORY PAGE

REVISION	DATE	REFERENCE TITLE	DESCRIPTION (Include AI # if Appropriate)

TMI-1 OPERATOR TRAINING REQUALIFICATION PROGRAM

JOB PERFORMANCE MEASURE

POSITION: SRO/RO

TITLE:	Perform a Recovery from High Temperature Letdown Isolation.
TASK NUMBER:	004C010101
EVALUATION METHOD:	PERFORM: X SIMULATE: ____
EVALUATION LOCATION:	SIMULATOR: X IN-PLANT: ____ CONTROL ROOM: ____
APPROXIMATE COMPLETION TIME:	15 Minutes
IMPORTANCE RATING (TIF):	TMI=3.19 NRC=3.6 A4.06
TOOLS AND EQUIPMENT:	OP 1104-2, Makeup and Purification System
EXAMINEE REFERENCES:	OP 1104-2, Makeup and Purification System Alarm Response Procedure D-2-1
10CFR55.45:	(a)(4), (6).

	Signature	Date
Submitted By:	D Witt	10/5/99
Validated By:	Ted Clark	10/18/99
Reviewed By: Lead Inst., Ops. Training or Lead Inst., Sim. Training	Ted Clark	10/18/99
Operations Training Manager	R Hamilton	10/19/99
Approved By: Plant Operations Director	D W Cook	12/3/99

SIMULATOR CONDITIONS:

Initialize at IC15, 16, or 17, and go to RUN.

Place IC-P-1A and 1B extension controls in pull-to-lock until MU-V-3 closes on high temperature interlock then restart IC-P-1A.

Insert the following overrides "ON" to simulate high temperature closure of MU-V-2A, 2B and MU-V-3:

08A9S19-ZDISSMUV2A(1)CLS PCR MU-V-2A RC LD FROM CLR CS

08A9S12-ZDISSMUV2B(1)CLS PCR MU-V-2B RC LD FROM CLR CS

02A5S56-ZDIPBCMUV3 ON CC MU-V-3 CLOSE PUSHBUTTON

EXAMINER PREVIEW:

This task deals with restoring normal letdown flow following high letdown temperature isolation of MU-V-2A, 2B, and MU-V-3.

The sequence of events which should be followed in the conduct of this JPM is as follows:

1. Read or otherwise inform the Examinee of the information contained in the "EXAMINEE PREVIEW" section of this JPM.
2. Inform the Examinee of the TASK CONDITIONS.
3. Allow the Examinee 2-3 minutes to scan the console.
4. Begin the cueing sequence as described in the EXAMINER CUES section.

A certain amount of liberty (questioning or cueing beyond the bounds of the "EXAMINER CUES") may be taken by the Examiner in trying to extract the requisite information from the Examinee, however, care must be taken to ensure that you do not COACH the Examinee.

To complete this task successfully, the Examinee must complete each critical element (an element of the task which, if omitted or performed incorrectly, would result in a failure to meet the "TASK STANDARD") correctly.

TASK STANDARDS:

Normal RCS letdown flowpath through both letdown coolers, block orifice (MU-V-4), and a makeup demineralizer (MU-K-1) has been established with sustained flow of 50±5 gpm. MU-V-5 and MU-V-70A are closed.

This sheet is available for the examinee to review

EXAMINEE PREVIEW:

For this event you are assigned the duties of the Primary CRO.

The instructor/examiner will act as the Secondary CRO and the SF.

The auxiliary instructor is available to act as Auxiliary Operators on the radio or page system.

When you are told to begin, you will respond to the cues or indications which the Examiner will provide to you either verbally or by the simulator.

You are to respond as you would in the plant for a real condition.

TASK CONDITIONS:

The Reactor is at 100% power.

MU-V-2A, 2B and MU-V-3 automatically closed on high letdown temperature due to temporary loss of ICCW system flow.

ICCW system flow has been returned to normal.

Your task will be to restore letdown flow to normal via the block orifice and MU-K-1A in accordance with 1104-2.

EXAMINER CUES	EXAMINEE ACTIONS	STANDARD
As the Shift Foreman, direct examinee to reestablish normal letdown flow IAW 1104-2.	*1. Examinee closes MU-V-6A/B by depressing the CLOSE pushbutton on CC.	1. MU-V-6A and 6B closed as indicated by their green CLOSE lights illuminated on CC. _____ SAT
ICO-ROLEPLAY as AO: When directed by examinee, use MUR01 to open MU-V-70A, and inform examinee when it is open.	*2. Examinee directs AO to open MU-V-70A.	2. MU-V-70A is open as reported by AO using radio or page. _____ SAT
	3. Examinee verifies normal ICCW system flow restored to letdown coolers.	3. Normal ICCW system flow (650-1300 gpm) indicated on IC-5-FI (CR), and IC-V-1A and IC-V-1B are open (CC).
ICO-ROLEPLAY: When directed by examinee to place MU-V-2A/B High Temperature Interlock in "BYPASS", delete active overrides on MU-V-2A and 2B. Then, inform examinee that task is completed. ICO-ROLE PLAY: When directed by examinee to place MU-V-3 High Temperature interlock in "BYPASS", delete active override on MU-V-3. Then, inform examinee that task is completed.	*4. Examinee directs AO to place MU-V-2A/B High Temperature Interlock in "BYPASS" on 1B ES Valves MCC, Unit 5D; and place MU-V-3 High Temperature interlock in "BYPASS" on T-85.	4. MU-V-2A/B High Temperature Interlock is in "BYPASS" as reported by AO _____ SAT MU-V-3 High Temperature interlock is in "BYPASS" as reported by AO. _____ SAT
	*5. Examinee closes MU-V-4 by depressing the CLOSE pushbutton on CC, and sets MU-V-5 demand at 0% by rotating the thumbscrew on the Bailey Controller on CC.	5. MU-V-4 is closed as indicated by its green CLOSE light illuminated on CC, and MU-V-5 demand is at 0%, as indicated on CC controller. MU-V-4 _____ SAT MU-V-5 _____ SAT

EXAMINER CUES	EXAMINEE ACTIONS	STANDARD
	*6. Examinee opens MU-V-2A and MU-V-2B by rotating their control switches on PCR to "OPEN" and then releasing.	6. MU-V-2A and 2B are open as indicated by red status lamps on CC and yellow status lamps on PCR. MU-V-2A _____ SAT MU-V-2B _____ SAT
	*7. Examinee pushes and holds MU-V-3 OPEN pushbutton (on CC) and simultaneously sets MU-V-5 demand at 10% by rotating the thumbscrew on its Bailey Controller (on CC).	7. MU-V-3 is OPEN as indicated by its red OPEN light illuminated on CC. MU-V-5 demand at 10%, as indicated on CC. MU-V-3 _____ SAT MU-V-5 _____ SAT
	*8. Examinee releases MU-V-3 pushbutton when the high temperature alarm, MAP D-2-1, clears.	8. MU-V-3 remains open as indicated by its red OPEN light illuminated on CC, and sustained letdown flow (10 gpm) indicated on MU-4FI on CC. _____ SAT
	9. Examinee increases the demand on MU-V-5 at a rate which results in an increase in letdown flow of $\leq$ 2.5 gpm/min on MU-4FI.	9. Letdown flow increased to 50±5 gpm, at $\leq$ 2.5 gpm/min as read on MU-4FI on CC.
Following demonstration of ability to control letdown flow through MU-V-5, allow examinee to increase letdown flowrate to 50±5 gpm without a rate limit.	*10. When letdown flow equals 50±5 gpm, examinee reopens MU-V-4 by pressing its OPEN pushbutton on CC, and concurrently closes MU-V-5 by reducing its controller demand to zero (0) on CC.	10. MU-V-4 open as indicated by red OPEN light illuminated on CC, and MU-V-5 closed as indicated by zero (0) demand on CC. MU-V-4 _____ SAT MU-V-5 _____ SAT

EXAMINER CUES	EXAMINEE ACTIONS	STANDARD
If examinee inquires as to which MU-K-1 to place in service, direct examinee to place MU-K-1A back in service.	*11. Examinee places the isolated demineralizer back in service by depressing the MU-V-6A OPEN pushbutton on CC.	11. MU-V-6A open as indicated by its red OPEN light illuminated on CC. _____ SAT
ICO-ROLEPLAY: When directed use MUR01 to close MU-V-70A. then inform examinee when it is closed.	*12. Examinee directs AO to close MU-V-70A.	12. MU-V-70A is closed as reported by AO over radio or page. _____ SAT
	13. Examinee adjusts ICCW system temperature using NR-V-15A/B on CR as necessary to maintain letdown temperature <125°F on MU5-TI.	13. Letdown temperature is maintained <125°F as indicated on MU5-TI on CC.
ICO-ROLE PLAY: When directed to return MU-V-2A/B and MU-V-3 High Temperature Interlock bypass switches back to "NORMAL," after one minute report task complete.	14. Examinee directs AO to return MU-V-2A/B and MU-V-3 High Temperature Interlock bypass switches back to "NORMAL."	14. MU-V-2A/B and MU-V-3 High Temperature Interlock bypass switches back to "NORMAL" as reported by AO over radio or page.

_____

JPM may be terminated at this time.

(*) Denotes Critical Element.

EVALUATION: SAT:_____ UNSAT:_____

JPM CHANGE HISTORY PAGE

REVISION	DATE	REFERENCE TITLE	DESCRIPTION (Include AI # if Appropriate)
1	10/25/89	N/A	Removed Examinee temperature adjustment of IC coolers.
2	10/12/90	N/A	Removed followup questions, modified for current critical task standards.
3	12/19/90	N/A	Updated to new format for summary page.
4	1/23/91	N/A	Modified examiner preview section and changed to "≤" 2.5GPM.
5	3/11/91	N/A	Removed critical task #6.
6	11/18/91	N/A	Alarm reformat change.
7	8/11/94	N/A	Remove alarm from critical step #5.
8	12/17/97	PCR to OP 1104-2	AI #97-330, modified for MU-V-3 operational changes.
9	11/24/98	1998 JPM Upgrade Project	Numerous editorial changes made. Updated format. Revised wording of TASK STANDARD.
10	10/05/99	Ops. Trng. Handout 3210-99-067	ETTS #24070: Added MU-V-2A & 2B to also close using overrides, and improved JPM editorially per NUREG 1021.

TMI-1 OPERATOR TRAINING REQUALIFICATION PROGRAM

JOB PERFORMANCE MEASURE – ALTERNATE PATH

POSITION: SRO/RO

TITLE:	Respond to decreasing or low RCS pressure.
TASK NUMBER:	0008350501
EVALUATION METHOD:	PERFORM: X SIMULATE: ____
EVALUATION LOCATION:	SIMULATOR: X IN-PLANT: ____ CONTROL ROOM: ____
APPROXIMATE COMPLETION TIME:	12 Minutes
IMPORTANCE RATING (TIF):	TMI=3.33 NRC=3.9 A2.02
TOOLS AND EQUIPMENT:	None
EXAMINEE REFERENCES:	1202-29, Pressurizer System Failures H-3-2, SASS Mismatch
10CFR55.45(a):	(3), (4), (6), (12)

	SIGNATURE	DATE
Submitted By:	D Smith	10-7-99
Validated By:	Fred L Gaccke	10/18/99
Reviewed by: Lead Instructor, Operator Training OR Lead Instructor, Simulator Training	Fred L Gaccke	10/18/99
Operations Training Manager	R L Parnell	10/19/99
Approved By: Plant Operations Director	D W Cook	12/3/99

SIMULATOR CONDITIONS:

IC15, 16, or 17 100% power, steady-state, core age optional.

Place A-RPS channel in manual bypass.

Insert 02A2S03-ZDIRC3BPT1 ON CC-RC3BPT1 NR PRESS. SEL S with value of "OFF" to prevent manual selection of RC3B-PT1.

Insert NI27A at 100% severity over 600 second ramp to fail high (2500 psig) selected RCS pressure transmitter, RC3A-PT1.

After RC-V-1 opens in auto, insert RC29 to fail RC-V-1 at 40%.

FREEZE simulation immediately after inserting RC29 and prior to receiving G-3-8 alarm.

EXAMINER PREVIEW:

This task deals with responding to decreasing RCS pressure due to automatic RCS pressure control system response to a failed RCS pressure transmitter with complete SASS channel failure. It is considered alternate path because RC-V-1 will not close when demanded, requiring its isolation per 1202-29.

The sequence of events which should be followed in the conduct of this JPM is as follows:

1. Read or otherwise inform the Examinee of the information contained in the "EXAMINEE PREVIEW" section of this JPM.
2. Inform the Examinee of the TASK CONDITIONS.
3. Allow the Examinee 2-3 minutes to scan the Console.
4. Begin the cueing sequence as described in the EXAMINER CUES section.

A certain amount of liberty (questioning or cueing beyond the bounds of the "EXAMINER CUES") may be taken by the Examiner in trying to extract the requisite information from the Examinee, however, care must be taken to ensure that you do not COACH the Examinee.

To complete this task successfully, the Examinee must complete each critical element (an element of the task which, if omitted or performed incorrectly, would result in a failure to meet the "TASK STANDARD") correctly.

TASK STANDARDS:

RC-V-1 isolated (RC-V-3 closed) and RC-RV-2 isolated (RC-V-2 closed), to prevent reactor trip on low RCS pressure (1900 psig).

This sheet is available for the examinee to review

EXAMINEE PREVIEW:

For this event you are assigned the duties of the primary CRO.

The instructor/examiner will act as the shift foreman, secondary CRO, and STA.

The auxiliary instructor is available to act as Auxiliary Operators on the radio or page system.

When you are told to begin, you will respond to the cues or indications that the Examiner will provide to you either verbally or by the simulator.

You are expected to perform the required immediate actions of any EP/AP/ATP from memory, but then you may refer to the applicable procedure(s) to verify proper completion of those actions.

You are to respond as you would in the plant for a real condition.

TASK CONDITIONS:

Plant is at 100% power, equilibrium xenon, _____ EFPD.

A-RPS channel is in manual bypass for its monthly surveillance.

No maintenance is currently in progress.

A SASS mismatch has just occurred on the RCS pressure channel.

Your task will be to respond to the SASS mismatch and its affects on the plant.

EXAMINER CUES	EXAMINEE ACTIONS	STANDARD
ICO-Place simulation in RUN. As Shift Foreman, direct examinee to respond to the SASS mismatch on the RCS pressure channel.	1. Examinee compares all console and panel indications of RCS pressure, and recognizes that RC3A-PT1 disagrees with all other indications.	1. RC3A-PT1 recognized as different than all other indications of RCS pressure, as reported by examinee.
As Shift Foreman, acknowledge all reports from examinee concerning failing pressure transmitter, failure of SASS selector system, and failure of RC-V-1 to close in manual.	2. Examinee attempts to select alternate RCS pressure transmitter, RC3B-PT1, by depressing its SASS selector pushbutton on CC, and recognizes its failure to operate.	2. Failure of RCS pressure SASS selector system recognized as indicated by white lamp remaining illuminated for RC3A-PT1.
	3. Examinee transfers RC-V-1 mode control switch on CC to MAN.	3. RC-V-1 mode control switch on CC is in MAN position.
	4. Examinee depresses and holds RC-V-1 CLOSE pushbutton on CC, and recognizes failure of RC-V-1 to close as indicated by both green (CLOSE) and red (OPEN) lamps lit.	4. RC-V-1 recognized as failed open by both its green (CLOSE) and red (OPEN) lamps lit on CC, and continued RCS pressure decrease.
	*5. Examinee closes RC-V-3 by depressing its CLOSE pushbutton on CC, and verifies RC-V-3 closes as indicated by its green CLOSE lamp on and its red OPEN lamp off.	5. RC-V-3 is closed as indicated by its green CLOSE lamp on and its red OPEN lamp off on CC. _____ SAT
	6. Examinee operates PZR heater control switches for Banks 4 and/or 5 on CR, and/or PZR pressure controller demand for Banks 1,2,3 on CC as necessary to stop RCS pressure decrease.	6. Pressurizer heater banks 1, 2, 3, 4, and/or 5 energized and RCS pressure decrease has stopped.

EXAMINER CUES	EXAMINEE ACTIONS	STANDARD
If examinee requests permission to block PORV (close RC-V-2) prior to or after its opening, as Shift Foreman grant that permission.	7. Examinee recognizes that PORV will open if RC3A-PT1 continues to fail above 2450 psig; or, examinee diagnoses PORV open by alarms G-1-6, G-1-7, and panel indication DPI-921 when RC3A-PT1 has failed above 2450 psig.	7. Impending or actual PORV opening is recognized by examinee, as indicated by examinee report or actions to block PORV.
	*8. Examinee depresses RC-V-2 CLOSE pushbutton on CC and verifies RC-V-2 closes as indicated by its green CLOSE lamp on and its red OPEN lamp off, and as indicated by no more flow through PORV on DPI-921.	8. RC-V-2 is closed as indicated by its green CLOSE lamp on and its red OPEN lamp off on CC, and PORV flow is terminated as indicated by alarms G-1-6, G-1-7 clearing. _____ SAT

JPM may be terminated when examinee has RCS pressure under control or after reactor trips.

(*) Denotes Critical Element.

EVALUATION: SAT:_____ UNSAT:_____

JPM CHANGE HISTORY PAGE

REVISION	DATE	REFERENCE TITLE	DESCRIPTION (Include AI # if Appropriate)

FILE COPY

TMI-1 OPERATOR TRAINING REQUALIFICATION PROGRAM

JOB PERFORMANCE MEASURE

POSITION: SRO/RO

TITLE:	Transfer Main Feedwater Pump Control between ICS H/A Controller and Full Range Motor Speed Control. (ICS to MSC)
TASK NUMBER:	0598060401
EVALUATION METHOD:	PERFORM: X SIMULATE: ____
EVALUATION LOCATION:	SIMULATOR: X IN-PLANT: ____ CONTROL ROOM: ____
APPROXIMATE COMPLETION TIME:	10 Minutes
IMPORTANCE RATING (TIF):	3.30 NRC = 3.2 K1.07
TOOLS AND EQUIPMENT:	None.
EXAMINEE REFERENCES:	OP 1106-3, Feedwater System
10CFR55.45:	(a)(4), (6)

	SIGNATURE	DATE
Submitted By:	D Witt	12/23/98
Validated By:	Gregory L. Black	12/23/98
Reviewed By: Lead Inst. – Ops. Training Or Lead Inst. - Sim. Training	Bob Lott	12/23/98
Reviewed By: Operations Training Manager	R L Hamilton	12/23/98
Approved By: Plant Operations Director	L. G. Noll	12-24-98

GPU Nuclear Inc
Middletown PA
Copyright 1998

SIMULATOR CONDITIONS:

Initialize the trainer at IC15, 16, or 17.

Go to RUN.

EXAMINER PREVIEW:

This JPM deals with transferring FW-P-1A speed control from the ICS controller ("ICS-36A") to the Motor Speed Changer ("Governor"), as a "planned evolution."

The trainer will be turned over to the Examinee in a condition with the reactor operating at full power. The Examinee will be given direction from the examiner acting as the Shift Foreman to transfer FW-P-1A speed control from the ICS controller (ICS-36A) to the motor speed changer ("governor"), to support subsequent maintenance on the ICS controller.

The sequence of events which should be followed in the conduct of this JPM is as follows:

1. Read or otherwise inform the Examinee of the information contained in the "EXAMINEE PREVIEW" section of this JPM.
2. Inform the Examinee of the TASK CONDITIONS.
3. Allow the Examinee 2-3 minutes to scan the Console.
4. Begin the cueing sequence as described in the EXAMINER CUES section.

A certain amount of liberty (questioning or cueing beyond the bounds of the "EXAMINER CUES") may be taken by the Examiner in trying to extract the requisite information from the Examinee, however, care must be taken to ensure that you do not COACH the Examinee.

To complete this task successfully, the Examinee must complete each critical element (an element of the task which, if omitted or performed incorrectly, would result in a failure to meet the "TASK STANDARD") correctly.

TASK STANDARDS:

FW-P-1A is under full range Motor Speed Changer control, NOT under ICS control, and no reactor trip occurred as a result of improper transfer or FW-P-1A speed control by examinee.

GPU Nuclear, Inc.
Middletown, PA
Copyright 1998

This sheet is available for the examinee to review

EXAMINEE PREVIEW:

For this event you are assigned the duties of the Secondary CRO.

The instructor/examiner will act as the Primary CRO and SF.

The auxiliary instructor is available to act as Auxiliary Operators on the radio or page system.

When you are told to begin, you will respond to the cues or indications which the Examiner will provide to you either verbally or by the simulator.

You are to respond as you would in the plant for a real condition.

TASK CONDITIONS:

The Reactor is at power.

There is no surveillance activity in progress at this time that could affect plant operations.

Maintenance is planning repairs on the E/P converter for the ICS speed control system for FW-P-1A.

GPU Nuclear, Inc.
Middletown, PA
Copyright 1998

EXAMINER CUES	EXAMINEE ACTIONS	STANDARD
Inform Examinee that in order to support maintenance on the E/P converter for FW-P-1A, it is desirable to transfer speed control of FW-P-1A to its Motor Speed Changer. There is an AO standing by FW-P-1A speed control cabinet with a radio to support you. ROLEPLAY: As the Shift Foreman, direct Examinee to perform this planned evolution.	1. Examinee directs AO to observe the FW-P-1A motor speed changer (MSC) handwheel for movement.	1. AO directed to observe the FW-P-1A motor speed changer (MSC) handwheel to confirm movement. AO responds that he is in position to observe the MSC handwheel for FW-P-1A.
NOTE: This step may result in a speed decrease which is acceptable for the next step (3). ICO-ROLEPLAY: As the AO at FW-P-1A, when examinee inquires about MSC handwheel movement, inform examinee that the MSC handwheel moved.	2. Examinee places the "1A FPT GOVERNOR" control switch (MSC) on CL in the "SLOW LOWER" position for a short time (5-10 seconds) while AO confirms the MSC handwheel responds to the signal. Examinee may observe a small speed decrease.	2. "1A FPT GOVERNOR" control switch (MSC) on CL is placed in the "SLOW LOWER" position for a short time (5-10 seconds) to confirm movement. Confirmation of MSC handwheel is received from the AO at FW-P-1A.
NOTE: The amount of speed decrease on FW-P-1A must be sufficient to ensure MSC controller has control, but must not be significant enough to cause a main feedwater transient that results in an automatic reactor trip.	*3. Examinee places and holds the "1A FPT GOVERNOR" (MSC) control switch on CL in "SLOW LOWER" position until a small decrease in speed (50-100 rpm) is observed on FW-P-1A speed recorder or PPC point A0320.	3. "1A FPT GOVERNOR" control switch on CL is placed and held in "SLOW LOWER" position until a small decrease in speed is observed on FW-P-1A speed recorder or PPC point A0320. _____ SAT
	*4. Examinee depresses the HAND button on the ICS controller for FW-P-1A to place the controller in HAND.	4. FW-P-1A ICS controller transferred to HAND, as indicated by white HAND lamp illuminated and red AUTO lamp off on the ICS station. _____ SAT

GPU Nuclear, Inc.
Middletown, PA
Copyright 1998

EXAMINER CUES	EXAMINEE ACTIONS	STANDARD
NOTE: Operation of the "1A FPT GOVERNOR" (MSC) control switch may not be necessary as the ICS controller demand is raised. This would indicate complete transfer of FW-P-1A speed control from ICS to the MSC.	*5. Examinee slowly raises demand on FW-P-1A ICS controller using its toggle switch, and provides "SLOW LOWER" signals on the "1A FPT GOVERNOR" (MSC) control switch as necessary to hold FW-P-1A speed fairly constant.	5. FW-P-1A speed control completely transferred from ICS to Motor Speed Changer control as evidenced by no further increase in FW-P-1A speed as ICS demand is increased. _____ SAT
	6. Examinee raises FW-P-1A ICS station demand to 100% using its toggle switch.	6. FW-P-1A ICS station demand raised to 100% as indicated on ICS station demand meter.
ICO-ROLE PLAY: If examinee asks, as AO at FW-P-1A inform examinee that you heard a "click" in the area of the MSC handwheel.	*7. Examinee turns the switch for "FP A TURBINE FULL RANGE MANUAL SPEED CONTROL" to "ON".	7. Switch for "FP A TURBINE FULL RANGE MANUAL SPEED CONTROL" in the "ON" position. _____ SAT
ROLEPLAY: As the Shift Foreman, direct examinee to control FW-P-1A speed as necessary to adjust flows between the main feedwater pumps to within 1E6 lbm/hr of each other, while maintaining lowest main feedwater valve D/P at 35 ± 10 psid.	8. Examinee manipulates "1A FPT GOVERNOR" (MSC) control switch as necessary to adjust FW-P-1A/B flows and lowest main feedwater valve D/P within limits specified by Shift Foreman.	8. "1A FPT GOVERNOR" (MSC) control switch manipulated to the "SLOW RAISE" and/or "SLOW LOWER" position as necessary to obtain values specified by Shift Foreman for: pump flows indicated on FW-FI-7 and FW-FI-8 on CL, and lowest main feedwater valve D/P indicated on SP-11A/B-PI on CL.
JPM may be terminated when: examinee has exhibited MSC control of FW-P-1A, or lack of MSC control of FW-P-1A; or the reactor trips as a result of improper examinee actions.	(*) Denotes Critical Element.	

EVALUATION: SAT:_____ UNSAT:_____

GPU Nuclear, Inc.
Middletown PA
Copyright 1998

JPM CHANGE HISTORY PAGE

REVISION	DATE	REFERENCE TITLE	DESCRIPTION (Include AI # if Appropriate)
4	12/23/98	1998 JPM Upgrade Project PCR 1-OS-98-0304 to OP 1106-3, rev.78	Converted to WORD97 & upgraded format. AI 98-156: Changed task elements considerably to conform with new method for "planned" changes in MFW pump speed control.

GPU Nuclear Inc.
Middletown PA
Copyright 1998

TMI-1 OPERATOR TRAINING REQUALIFICATION PROGRAM

JOB PERFORMANCE MEASURE - ALTERNATE PATH

POSITION: SRO/RO

TITLE:	Perform the required actions if high Containment temperature cannot be controlled within specific limits.
TASK NUMBER:	0220070401
EVALUATION METHOD:	PERFORM: X SIMULATE: ____
EVALUATION LOCATION:	SIMULATOR: X IN-PLANT: ____ CONTROL ROOM: ____
APPROXIMATE COMPLETION TIME:	15 Minutes
IMPORTANCE RATING (TIF):	TMI=3.17 NRC=3.2 A4.02
TOOLS AND EQUIPMENT:	Copy of 1104-38, section 3.2.
EXAMINEE REFERENCES:	1104-38, Reactor Building Emergency Cooling Water System
10CFR55.45:	(a)(4), (6), (8).

	SIGNATURE	DATE
Submitted By:	[signature]	11-30-99
Validated By:	[signature]	12/6/99
Reviewed by: Lead Instructor, Operator Training OR Lead Instructor, Simulator Training	[signature]	12/6/99
Operations Training Manager	[signature]	12/9/99
Approved By: Plant Operations Director	[signature]	12/17/99

SIMULATOR CONDITIONS:

Initialize to **IC15, 16, or 17.**

Insert Malfunction **MS02A** at **0.2% severity.**

Insert Malfunction **RW08** at **0% severity** to fail RR-V-6.

EXAMINER PREVIEW:

This JPM deals with responding to high containment temperatures due to a small secondary steam leak, requiring initiation of RB Emergency Cooling per 1104-38.

This JPM is considered alternate path because RR-V-6 is failed closed, so RR-V-5 must be used to establish RR cooling flow and control cooler outlet pressures.

The sequence of events which should be followed in the conduct of this JPM is as follows:

1. Read or otherwise inform the Examinee of the information contained in the "EXAMINEE PREVIEW" section of this JPM.
2. Inform the Examinee of the TASK CONDITIONS.
3. Allow the Examinee 2-3 minutes to scan the Console.
4. Begin the cueing sequence as described in the EXAMINER CUES section.

A certain amount of liberty (questioning or cueing beyond the bounds of the "EXAMINER CUES") may be taken by the Examiner in trying to extract the requisite information from the Examinee, however, care must be taken to ensure that you do not COACH the Examinee.

To complete this task successfully, the Examinee must complete each critical element (an element of the task which, if omitted or performed incorrectly, would result in a failure to meet the "TASK STANDARD") correctly.

TASK STANDARDS:

RB Emergency Cooling has been initiated in accordance with 1104-38 as follows:

- RR-P-1A is running.
- RR-V-1A is open.
- RR-V-3A and 3B are open.
- RR-V-4A and 4B are open.
- RR-V-5 is throttled open.
- RR-PI-224 and 225 read 55-60 psig.
- PPC points A1049 and A1050 (Area 18, Group 4) indicate >0 gpm.

This sheet is available for the examinee to review

EXAMINEE PREVIEW:

For this event you are assigned the duties of the 3rd CRO.

The Instructor/Examiner will act as the Console CROs and the SF.

The Auxiliary Instructor is available to act as Auxiliary Operators on the radio or page system.

When you are told to begin, you will respond to the cues or indications that the Examiner will provide to you either verbally or by the Simulator.

You are to respond as you would in the Plant for a real condition.

TASK CONDITIONS:

The Plant is at 100% power. ICS is in full AUTO.

There is a small steam leak suspected inside containment that is causing an increase in RB temperature and pressure.

Your task will be to initiate RB Emergency Cooling with RR-P-1A and the "Alpha" and "Bravo" coolers per 1104-38, section 3.2.

The Plant Operations Director has approved RB Emergency Cooling system operation, and both trains of the system have been verified aligned for ES standby.

EXAMINER CUES	EXAMINEE ACTIONS	STANDARD
EXAMINER-ROLE PLAY: As the SF, instruct the examinee to initiate RB Emergency Cooling, with RR-P-1A and the "Alpha" and "Bravo" coolers. Provide examinee with a copy of 1104-38, section 3.2, with steps 3.2.1.1, 3.2.1.2 and 3.2.2.1 initialed for trains A & B.	1. Examinee recognizes that steps 3.2.1.1, 3.2.1.2, and 3.2.2.1 have been initialed as completed.	1. Steps 3.2.1.1, 3.2.1.2, and 3.2.2.1 recognized as completed and initialed.
ICO-ROLE PLAY: When directed, use CCR32 to close NS-V-85, and use CCR31 to verify NS-V-8 closed. Then after 60 - 90 seconds, report task is complete to control room.	2. Examinee directs AO to close NS-V-85 and verify NS-V-8 is closed.	2. NS-V-85 and NS-V-8 are closed as reported by AO.
NOTE: RR-V-10A opens automatically when RR-P-1A is started.	*3. Examinee starts RR-P-1A on CC by rotating the extension control in the clockwise direction and verifying RR-V-10A opens by its status indication on PCR.	3. RR-P-1A running as indicated by its red breaker status lamp on, and its green breaker status lamp off, on CC. RR-P-1A _____ SAT RR-V-10A open as indicated by its amber ES status lamp illuminated on PCR.
NOTE: RR-V-3's are normally open for ES standby.	4. Examinee verifies open RR-V-3A and 3B using their pushbutton lamps on CR.	4. RR-V-3A and 3B are open as indicated by their red OPEN lamps on, and green CLOSE lamps off, on CR.
	*5. Examinee opens RR-V-4A and 4B by depressing their OPEN pushbuttons on CR.	5. RR-V-4A and 4B are open as indicated by their red OPEN lamps on, and green CLOSE lamps off, on CR. RR-V-4A _____ SAT RR-V-4B _____ SAT

EXAMINER CUES	EXAMINEE ACTIONS	STANDARD
EXAMINER-ROLE PLAY: Inform examinee that ISPH water level is >277' as indicated on SR-LI-1172. NOTE: RR-V-10A automatically closes when RR-V-1A is full open.	*6. Examinee opens RR-V-1A by depressing its OPEN pushbutton on CR, and verifies that RR-V-10A closes using its status indication on PCR.	6. RR-V-1A is open as indicated by its red OPEN lamp on, and its green CLOSE lamp off, on CC. RR-V-1A _____ SAT RR-V-1OA closed as indicated by its blue ES status lamp illuminated on PCR.
NOTE: Due to RR-V-6 being failed closed, there will be no flow through RB emergency coolers when RR-V-4A, 4B, and 1A are opened. **ICO-ROLE PLAY:** If examinee requests local status of RR-V-6, after a 30 second time delay inform examinee that RR-V-6 indicates closed. If directed to manually open RR-V-6, after a 60 second time delay inform examinee that RR-V-6 is bound shut and cannot be opened.	7. Examinee recognizes very high pressure on outlets of "Alpha" and "Bravo" RB emergency coolers (>60 psig), as read on RR-PI-224 and 225 on CR.	7. "Alpha" and "Bravo" RB emergency coolers outlet pressures as read on RR-PI-224 and 225 on CR are recognized as much higher than 60 psig.
EXAMINER-ROLE PLAY: If at any time examinee requests RR cooler outlet flow rates from PPC, inform examinee of actual indicated flows on PPC points A1049 and A1050.	*8. Examinee throttles open RR-V-5 by depressing its OPEN and CLOSE pushbuttons on CR as necessary to obtain 55-60 psig on RR-PI-224 and 225.	8. RR-V-5 throttled open, and RR-PI-224 and 225 on CR indicate 55-60 psig. _____ SAT

EXAMINER CUES	EXAMINEE ACTIONS	STANDARD
EXAMINER-ROLE PLAY: If examinee inquires as to whether additional RR cooling is needed with RR-P-1B and "Charlie" cooler, state that time is needed with two coolers in service to evaluate their effectiveness on limiting RB pressure and temperature.	9. Examinee monitors RR cooler outlet flows on PPC points A1049 and A1050 (Area 18,Group 4), and verifies total flow on RR-P-1A is less than or equal to 5800 gpm.	9. PPC points A1049 and A1050 indicate flow through "Alpha" and "Bravo" RB emergency coolers, and total flow is less than or equal to 5800 gpm.

JPM may be terminated when examinee reports task complete.

(*) Denotes Critical Element.

EVALUATION: SAT:_____ UNSAT:_____

JPM CHANGE HISTORY PAGE

REVISION	DATE	REFERENCE TITLE	DESCRIPTION (Include AI # if Appropriate)
1	03/10/99	N/A	Deleted grade sheet, upgrade Simulator terminology, formatted preview sheet, and converted to word97. A new Section was added to address AP 1001G requirements for use of OP 1104-38 during the performance. A subsequent review, and approval of these actions are required by a Licensed Operator.
2	11/30/99	1104-38, rev. 40, 07/30/99	1. Numerous editorial improvements. 2. Added requirement to place "A" and "B" emergency coolers in service.

TMI-1 OPERATOR TRAINING REQUALIFICATION PROGRAM

JOB PERFORMANCE MEASURE

POSITION: SRO/RO

TITLE:	Return an Engineered Safeguards Bus (4160) to its Normal Supply
TASK NUMBER:	0620080101
EVALUATION METHOD:	PERFORM: X SIMULATE: ____
EVALUATION LOCATION:	SIMULATOR: X IN-PLANT: ____ CONTROL ROOM: ____
APPROXIMATE COMPLETION TIME:	12 Minutes
IMPORTANCE RATING (TIF):	TMI=3.50 NRC=3.1 A2.09
TOOLS AND EQUIPMENT:	Copy of 1202-2, Attachment 4
EXAMINEE REFERENCES:	1202-2, Loss of Station Power
10CFR55.45(a):	(2), (3), (6), (12), (13)

	SIGNATURE	DATE
Submitted By:	[signature]	11-22-99
Validated By:	[signature]	11/24/99
Reviewed by: Lead Instructor, Operator Training OR Lead Instructor, Simulator Training	[signature]	11/24/99
Operations Training Manager	[signature]	12/1/99
Approved By: Plant Operations Director	[signature]	12/3/99

SIMULATOR CONDITIONS:

Initialize at IC15, 16, or 17.

Start EG-Y-1A by depressing its START pushbutton on CR.

Synchronize G1-02 with 1D 4160V bus, and close G1-02.

Open 1SB-D2.

Turn synchroscope off.

Acknowledge and reset all EG-Y-1A trouble alarms.

EXAMINER PREVIEW:

This task deals with returning the 1D 4160V bus back to its normal power supply, the 1B auxiliary transformer. The examinee must manipulate the necessary diesel and breaker controls to accomplish this task.

The sequence of events which should be followed in the conduct of this JPM is as follows:

1. Read or otherwise inform the Examinee of the information contained in the "EXAMINEE PREVIEW" section of this JPM.
2. Inform the Examinee of the TASK CONDITIONS.
3. Allow the Examinee 2-3 minutes to scan the Console.
4. Begin the cueing sequence as described in the EXAMINER CUES section.

A certain amount of liberty (questioning or cueing beyond the bounds of the "EXAMINER CUES") may be taken by the Examiner in trying to extract the requisite information from the Examinee, however, care must be taken to ensure that you do not COACH the Examinee.

To complete this task successfully, the Examinee must complete each critical element (an element of the task which, if omitted or performed incorrectly, would result in a failure to meet the "TASK STANDARD") correctly.

TASK STANDARDS:

The 1D 4160V bus is energized by the 1B auxiliary transformer via breaker 1SB-D2, G1-02 breaker is open, and EG-Y-1A is running with no load. During the transfer of power supplies, no 1D 4160V bus under-voltage occurred due to operator error.

This sheet is available for the examinee to review

EXAMINEE PREVIEW:

For this event you are assigned the duties of the third CRO.

The instructor/examiner will act as the primary CRO and the SF.

The auxiliary instructor is available to act as auxiliary operators on the radio or page system.

When you are told to begin, you will respond to the cues or indications that the Examiner will provide to you either verbally or by the simulator.

You are to respond as you would in the plant for a real condition.

TASK CONDITIONS:

The plant is at 100% power, steady-state, _____ EFPD.

The 1D 4160V bus is currently energized by EG-Y-1A after a previous fault pressure relay trip of the 1B auxiliary transformer.

The 1B auxiliary transformer has been returned to service, and all BOP buses were hot bus transferred back to their normal power supply.

Your task will be to transfer the 1D 4160V bus back to the 1B auxiliary transformer in accordance with 1202-2, Attachment 4.

EG-Y-1A will not be shut down as part of this task.

EXAMINER CUES	EXAMINEE ACTIONS	STANDARD
As the Shift Foreman, provide examinee with a copy of 1202-2, Attachment 4, and direct examinee to transfer the 1D 4160V bus back to the 1B auxiliary transformer.	1. Examinee verifies that the Diesel Generator 1A "Manual Voltage Controller" is set at 45%.	1. **Diesel Generator 1A "Manual Voltage Controller" on CR is verified to be set at 45% as indicated on the controller pot.**
NOTE: All control room controls and indicators for EG-Y-1A are on console right (CR).	*2. Examinee places Diesel Generator 1A "Exciter" selector to the MANUAL position.	2. **Diesel Generator 1A "Exciter" selector switch is in the MANUAL position as indicated at the switch.** _____ SAT
	3. Examinee maintains 1D 4KV bus voltage at 4000 – 4300 volts using the Diesel Generator 1A "Manual Voltage Controller."	3. **1D 4KV bus voltage reads 4–4.3 kilovolts as indicated on the 4KV Bus 1D Kilovolt meter.**
ICO-ROLE PLAY: As AO at EG-Y-1A, when directed to place the unit/parallel droop switch in the parallel position, use **EGR09**. Then report that the task is complete.	*4. Examinee directs AO at EG-Y-1A to place local "unit/parallel droop switch" in the PARALLEL position.	4. **EG-Y-1A unit/parallel droop switch is in the PARALLEL position as reported by the AO.** _____ SAT
ICO-ROLE PLAY: As AO at EG-Y-1A, when directed to slowly increase governor speed droop setting, insert **EGR07** over 120 second ramp to 70%. When the final value of EGR07 is 70%, report that the task is complete.	*5. Examinee directs AO to slowly increase EG-Y-1A local governor speed droop setting to 70%, and examinee adjusts EG-Y-1A speed to maintain 900 rpm and 60Hz frequency during the speed droop setting adjustment.	5. **EG-Y-1A governor speed droop is slowly raised to 70% as reported by AO, as EG-Y-1A speed and frequency is maintained at 900 ± 50 rpm and 59-61 hertz as indicated on Diesel Generator 1A speed and frequency meters.** 900 ± 50 rpm _____ SAT 59-61 hertz _____ SAT

EXAMINER CUES	EXAMINEE ACTIONS	STANDARD
NOTE: All control room controls and indicators for EG-Y-1A are on console right (CR).	*6. Examinee places the synchroscope into operation by placing the switch to immediate right of "1SB-D2 Bus 1D Feeder" control switch to the ON position.	6. Synchroscope for 1SB-D2 breaker is ON, as indicated by scope needle movement and its white lamps cycling bright to dim as it rotates. _____ SAT
	*7. Examinee adjusts the Diesel Generator 1A "Manual Voltage Controller" to match 1D bus voltage with system voltage by -0 to +50 volts, as indicated by the two digital voltmeters on the immediate left of the synchroscope.	7. 1D 4160V bus voltage is adjusted to within -0 to +.05 kilovolts of system voltage, as indicated by the two digital voltmeters on the immediate left of the synchroscope. _____ SAT
	*8. Examinee adjusts the Diesel Generator 1A "Governor" control to adjust diesel speed until the synchroscope is moving slowly in the "FAST" (clockwise) direction.	8. Diesel Generator 1A speed is adjusted such that the synchroscope needle is moving slowly in the "FAST" (clockwise) direction. _____ SAT
	*9. Examinee closes 1SB-D2 breaker using its control switch, when the synchroscope needle indicates 1155 to 1200 on the dial.	9. 1SB-D2 breaker is closed as indicated by its red breaker status lamp on and its green breaker status lamp off. _____ SAT
	10. Examinee reduces Diesel Generator 1A governor setting to shift load from Diesel Generator 1A to the 1B Auxiliary Transformer.	10. Diesel Generator 1A megawatt load is reduced as indicated by decreasing value on Diesel Generator 1A Megawatt meter.

EXAMINER CUES	EXAMINEE ACTIONS	STANDARD
NOTE: All control room controls and indicators for EG-Y-1A are on console right (CR).	11. Examinee de-energizes synchroscope by placing its control switch to immediate right of "1SB-D2 Bus 1D Feeder" control switch to the OFF position.	11. Synchroscope on console right is off as indicated by its control switch to immediate right of "1SB-D2 Bus 1D Feeder" control switch being in the OFF position.
	*12. Examinee reduces Diesel Generator 1A governor setting to obtain ≈0.3 MW load as indicated on Diesel Generator 1A Megawatt meter.	12. Diesel Generator 1A load is ≈0.3 MW as indicated on Diesel Generator 1A Megawatt meter. _____ SAT
	*13. Examinee opens G1-02 breaker using its control switch.	13. G1-02 breaker is open as indicated by its green breaker status lamp on and its red breaker status lamp off. _____ SAT

JPM may be terminated upon successful completion of task or if operator causes 1D 4160V bus undervoltage at any time during the task.

(*) Denotes Critical Element.

EVALUATION: SAT:_____ UNSAT:_____

JPM CHANGE HISTORY PAGE

REVISION	DATE	REFERENCE TITLE	DESCRIPTION (Include AI # if Appropriate)
5	11/22/99		Updated JPM format and simulator function terminology.

TMI-1 OPERATOR TRAINING REQUALIFICATION PROGRAM

JOB PERFORMANCE MEASURE

POSITION: SRO/RO

TITLE:	Energize the Reactor Protection System
TASK NUMBER:	0120010101
EVALUATION METHOD:	PERFORM: X SIMULATE:
EVALUATION LOCATION:	SIMULATOR: X IN-PLANT: CONTROL ROOM:
APPROXIMATE COMPLETION TIME:	7 Minutes
IMPORTANCE RATING (TIF):	TMI=3.08 NRC=3.6 A2.02
TOOLS AND EQUIPMENT:	Copy of OP 1107-2, Enclosure 6, with steps 3.h.1. - 3.h.4 signed off.
EXAMINEE REFERENCES:	OP 1107-2, Emergency Electrical System (rev. 97)
10CFR55.45:	(a)(3), (4), (6).

	SIGNATURE	DATE
Submitted By:		11/22/99
Validated By:		11/24/99
Reviewed by: Lead Instructor, Operator Training OR Lead Instructor, Simulator Training		11/24/99
Operations Training Manager		12/1/99
Approved By: Plant Operations Director		12/3/99

SIMULATOR CONDITIONS:

Initialize the trainer at IC15, 16, or 17.

Perform the following in the D-RPS cabinet:

1. Insert Manual Bypass key (#6) and turn it clockwise 90 degrees.
2. Open and then re-close the system AC power breaker to the right of the "AVAILABLE" lamp.
3. Select "OFF" on both power supplies for NI-4, and one for NI-8.
4. Select "OFF" on the RC Pump Contact Monitor power supply.
5. Open the (2) DC Power Supply breakers (per bakelite tags).
6. Open the System AC Supply breaker (per bakelite tag).
7. Remove the Shutdown Bypass Key if installed.

The following **REMOTE FUNCTIONS** will be used during the JPM: **RDR81, 3 and 4**, to reset CB3 and CB4.

EXAMINER PREVIEW:

This JPM deals with re-energizing the "D" RPS cabinet.

The examinee will be told that power was lost to VBD last shift and has now been restored. The examinee will be instructed to re-energize the D-RPS channel and place it in normal service.

The sequence of events which should be followed in the conduct of this JPM is as follows:

1. Provide examinee with the information contained in the "EXAMINEE PREVIEW" section of this JPM.
2. Inform the examinee of the TASK CONDITIONS.
3. Allow the examinee 2-3 minutes to scan the Console.
4. Begin the cueing sequence as described in the EXAMINER CUES section.

A certain amount of liberty (questioning or cueing beyond the bounds of the "EXAMINER CUES") may be taken by the Examiner in trying to extract the requisite information from the Examinee, however, care must be taken to ensure that you do not COACH the Examinee.

To complete this task successfully, the examinee must complete each critical element - an element of the task which, if omitted or performed incorrectly, would result in a failure to meet the "TASK STANDARD."

TASK STANDARD:

D-RPS channel and its subsystem trip relay are energized (MAP alarm G-1-2 clear), both NI-4 and NI-8 power supplies are energized (MAP alarm G-2-4 clear), and D-RPS channel is NOT in Manual Bypass (MAP alarm G-3-1 clear).

This sheet is available for the examinee to review

EXAMINEE PREVIEW:

For this event you are assigned the duties of the third CRO.

The instructor/examiner will act as the Console CRO and the SF.

The auxiliary instructor is available to act as Auxiliary Operators on the radio or page system.

When you are told to begin, you will respond to the cues or indications that the Examiner will provide to you either verbally or by the simulator.

You are to respond as you would in the plant for a real condition.

TASK CONDITIONS:

The plant is at 100% power.

During the last shift, power to VBD was lost due to D-Inverter failure.

D-Inverter and VBD have been restored.

D-RPS channel was secured per 1107-2, Enclosure 6, steps 3.h.1-4. It has been placed in Manual Bypass.

MAP alarms are as indicated.

Your task will be to re-energize and reset the D-RPS channel and restore it to normal operation.

There is a CRO available in the Relay Room to support you as needed.

EXAMINER CUES	EXAMINEE ACTIONS	STANDARD
Provide examinee a copy of 1107-2, Enclosure 6, with steps 3.h.1 through 4 completed and signed off. As the Shift Foreman, direct examinee to re-energize and reset the D-RPS channel and return it to normal operation.	1. Examinee verifies the following items: Power available light on. System AC Power Breaker closed. Fan Breakers closed.	1. **The following items verified and signed off in procedure:** ♦ **Power available light on** ♦ **System AC Power Breaker closed** ♦ **Fan Breakers closed**
	*2. Examinee closes both DC power supply breakers - one in each subassembly – as labeled with bakelite tags.	2. **Both DC power supply breakers (2) are closed as indicated by breaker positions.** _____ SAT
EXAMINER: Acknowledge/reset MAP alarms only if requested by examinee.	*3. Examinee closes the AC system power supply breaker as labeled with bakelite tag.	3. **AC power supply breaker is closed as indicated by: breaker position, all D-RPS modules having power restored, MAP alarm G-1-2 clearing, and MAP alarm G-3-1 alarming.** _____ SAT
ICO/ROLE-PLAY: Use **REMOTE FUNCTION RDR81 3 and 4** to close CB3 and CB4 when directed by examinee. EXAMINER: Acknowledge/reset MAP alarms only if requested by examinee.	4. Examinee directs CRO in Relay Room to close CB3 and CB4 locally by pressing their CLOSE pushbuttons.	4. **CB3 and CB4 closed locally as indicated by MAP Alarm G-1-3 clearing.**
	5. Examinee presses the FAULT RESET push-button on the CRD panel (CC) to reset the "F" Electronic Trip.	5. **"F" Electronic Trip reset as indicated by PROGRAMMER LAMP FAULT B light out on CRD panel (CC).**

EXAMINER CUES	EXAMINEE ACTIONS	STANDARD
EXAMINER: Acknowledge/reset MAP alarms only if requested by examinee.	*6. Examinee re-energizes NI-4 and NI-8, by turning ON the power supply switches and depressing the RESET toggle switches for both NI-4 power supplies and the one NI-8 power supply.	6. NI-4 and NI-8 energized as indicated by voltage on all three power supplies (two for NI-4, one for NI-8), normal NI indications in D-RPS cabinet and on console center, and MAP Alarm G-2-4 clear. _____ SAT
	*7. Examinee re-energizes the RCP contact monitor power supply by turning ON its power supply switch and depressing the RESET toggle switch on the power supply module.	7. Contact Monitor power supply energized as indicated by the CONTACT MONITOR CONTACT STATE lights (4) being dim. _____ SAT
EXAMINER: Inform examinee that you may inform him/her of the bright/dim status of any lamp on RPS.	*8. Examinee resets all bistables in the RPS cabinet by depressing the RESET toggle switches and the OUTPUT MEMORY toggle switches on all tripped bistables in the cabinet.	8. All bistables in the D-RPS cabinet are reset as indicated by their individual OUTPUT STATE lamps being dim. _____ SAT
	*9. Examinee resets the RB Pressure Contact Monitor in the RPS cabinet by depressing the TEST RESET switch on the HIGH BLDG. PRESS. RESET module.	9. The RB Pressure Contact Monitor is reset as indicated by its CONTACT BUFFER red INPUT STATE light being off. _____ SAT
EXAMINER: Acknowledge/reset MAP alarms only if requested by examinee.	*10. Examinee removes D-RPS channel from manual bypass by turning the Manual Bypass Key in the Reactor Trip module 90° counter-clockwise, then removing the key.	10. The D-RPS channel is removed from Manual Bypass as indicated by MAP alarm G-3-1 clearing. _____ SAT

EXAMINER CUES	EXAMINEE ACTIONS	STANDARD
EXAMINER: Acknowledge/reset MAP alarms only if requested by examinee.	11. Examinee verifies D-RPS channel is reset by verifying MAP alarm G-1-2 remains clear after removing channel from manual bypass.	11. D-RPS channel is reset as evidenced by subsystem trip lamp dim on all four RPS channels and MAP alarm G-1-2 clear.

JPM may be terminated at this time.

(*) Denotes Critical Element.

EVALUATION: SAT:_____ UNSAT:_____

JPM CHANGE HISTORY PAGE

REVISION	DATE	REFERENCE TITLE	DESCRIPTION (Include AI # if Appropriate)
1	10/31/89	NA	Modified the "Simulator Conditions" and "Examinee Preview" sections to follow procedural guidance.
2	11/04/90	NA	Decreased "Completion Time" to 7 minutes, added Remote Functions used, modified format to existing standard, removed follow-up questions.
3	01/23/91	NA	Updated to current standard, added "Tools and Equipment", modified Examiner Cue #1.
4	11/20/91	NA	Updated for Alarm Reformat.
5	10/26/93	NA	Modified JPM step order due to procedure change.
6	09/11/96	PCR for OP 1107-2	AI 96-071, changed enclosure number, added new verification step #1.
7	11/04/98		Converted to Word97, deleted grading sheet, corrected typos, updated simulator terminology, and changed to D-RPS channel.
8	11/15/99	1107-2, rev. 97.	Updated JPM to revision 97 of 1107-2.

TMI-1 OPERATOR TRAINING REQUALIFICATION PROGRAM

JOB PERFORMANCE MEASURE

POSITION: SRO/RO/AO

TITLE:	Perform and/or verify emergency boration lineup. (RBAT)
TASK NUMBER:	009A010204
EVALUATION METHOD:	PERFORM:_____ SIMULATE:__X__
EVALUATION LOCATION:	SIMULATOR:_____ IN-PLANT:__X__ CONTROL ROOM:_____
APPROXIMATE COMPLETION TIME:	10 Minutes
IMPORTANCE RATING (TIF):	TMI=2.86 NRC=3.8 A2.14
TOOLS AND EQUIPMENT:	None
EXAMINEE REFERENCES:	1103-4, Soluble Poison Concentration Control, Revision No. 50
10CFR55.45(a):	(6), (8), (12)

	SIGNATURE	DATE
Submitted By:		12-15-99
Validated By:		12/15/99
Reviewed by: Lead Instructor, Operator Training OR Lead Instructor, Simulator Training		12/15/99
Operations Training Manager		12/16/99
Approved By: Plant Operations Director		12/17/99

SIMULATOR CONDITIONS: N/A

EXAMINER PREVIEW:

This task deals with aligning the A-RBAT (WDL-T-7A) at Rad Waste panel in auxiliary building for emergency boration.

If this JPM is conducted on a licensed operator, realism would be enhanced if EXAMINEE PREVIEW is conducted in the control tower, and preferably just outside control room.

The sequence of events which should be followed in the conduct of this JPM is as follows:

1. Read or otherwise inform the Examinee of the information contained in the "EXAMINEE PREVIEW" section of this JPM.
2. Inform the Examinee of the TASK CONDITIONS.
3. Allow the Examinee to ask questions about the JPM. (In-Plant)
4. Begin the cueing sequence as described in the EXAMINER CUES section.

A certain amount of liberty (questioning or cueing beyond the bounds of the "EXAMINER CUES") may be taken by the Examiner in trying to extract the requisite information from the Examinee, however, care must be taken to ensure that you do not COACH the Examinee.

To complete this task successfully, the Examinee must complete each critical element (an element of the task which, if omitted or performed incorrectly, would result in a failure to meet the "TASK STANDARD") correctly.

For In-Plant JPMs additional safety gear may be required. The Examinee should inform the Examiner that additional gear is required. The Examiner will then specify if the additional safety gear is to be donned, or to be simulated after the Examinee specifies what equipment is required and where it would be located. (In-Plant)

Failure to use the proper safety equipment is immediate grounds for failure.

TASK STANDARDS:

WDL-P-13A running.

WDL-V-89 and WDL-V-49 open.

WDL-V-93 closed.

This sheet is available for the examinee to review

EXAMINEE PREVIEW:

For this event you are assigned the duties of the Extra CRO or the Primary AO.

The instructor/examiner will act as the Console CRO and/or SF.

When you are told to begin, you will respond to the cues or indications that the Examiner will provide to you verbally.

Unless otherwise informed, you are to SIMULATE all actions taken.

You are expected to maintain proper communications with the Control Room as you would in the plant for a real condition.

It is very important that you describe to the instructor/examiner the physical details of the actions that you would be taking if you were actually performing the manipulations required to complete this task. Failure to adequately describe your actions could result in a failure to meet the task standard.

You are to respond as you would in the plant for a real condition.

You are expected to wear all required safety gear in accordance with plant procedures and policies. If during a simulated task additional safety gear is required you should notify the Examiner.

Failure to use the proper safety equipment is immediate grounds for failure.

TASK CONDITIONS:

The reactor has just tripped due to a turbine trip from 100% power.

Two control rods are stuck at 100% withdrawn, requiring emergency boration which is currently in progress from the BWST.

The control room crew has just completed 1210-1 immediate actions.

RCS and makeup system inventory is becoming a problem due to makeup from BWST with stable RCS temperature.

With the BAMT out of service, WDL-T-7A (A-RBAT) is the alternate emergency boration source.

WDL-P-13A is OFF, and all valves operated from Rad Waste panel are currently closed.

The control room operator has performed the following in control room: opened WDL-V-61, reset and started batch controller, and opened MU-V-10.

EXAMINER CUES	EXAMINEE ACTIONS	STANDARD
As shift foreman or CRO, direct examinee to align the A-RBAT for emergency boration per 1103-4. Provide examinee with a copy of 1103-4, Section 3.11, signed off through and including step 3.11.2.3. NOTE: All actions are performed at the Rad Waste panel on 305' elevation of auxiliary building.	1. Examinee proceeds to Rad Waste panel on 305' elevation of auxiliary building.	1. Examinee is at Rad Waste panel on 305' elevation of auxiliary building.
INITIAL CONDITION CUE: If examinee inquires as to the initial status of WDL-V-89, inform examinee that WDL-V-89 is CLOSED. POSITIVE CUE: If step 2 performed correctly, inform examinee that WDL-V-89 red OPEN lamp is on and its green CLOSE lamp is off. NEGATIVE CUE: If step 2 is performed incorrectly or incorrect valve is manipulated, provide examinee with appropriate cue for action performed.	*2. Examinee opens WDL-V-89, suction valve for WDL-P-13A, by depressing WDL-V-89 red OPEN pushbutton.	2. WDL-V-89 is open as evidenced by its red OPEN lamp on and its green CLOSE lamp off. _____ SAT
INITIAL CONDITION CUE: If examinee inquires as to the initial status of WDL-V-49, inform examinee that WDL-V-49 is CLOSED. POSITIVE CUE: If step 3 performed correctly, inform examinee that WDL-V-49 red OPEN lamp is on and its green CLOSE lamp is off. NEGATIVE CUE: If step 3 is performed incorrectly or incorrect valve is manipulated, provide examinee with appropriate cue for action performed.	*3. Examinee opens WDL-V-49, WDL-P-13A discharge to WDL-V-61, by depressing WDL-V-49 red OPEN pushbutton.	3. WDL-V-49 is open as evidenced by its red OPEN lamp on and its green CLOSE lamp off. _____ SAT

EXAMINER CUES	EXAMINEE ACTIONS	STANDARD
INITIAL CONDITION CUE: If examinee inquires as to the initial status of WDL-V-93, inform examinee that WDL-V-93 is CLOSED. POSITIVE CUE: If step 4 performed correctly, inform examinee that WDL-V-93 OPEN lamp is off and its green CLOSE lamp is on. NEGATIVE CUE: If step 4 is performed incorrectly or incorrect valve is manipulated, provide examinee with appropriate cue for action performed.	4. Examinee closes or verifies closed WDL-V-93, WDL-P-13A recirc to WDL-T-7A, by depressing WDL-V-93 green CLOSE pushbutton, or verifying WDL-V-93 green CLOSE lamp is on and its red OPEN lamp is off.	4. WDL-V-93 is closed as evidenced by its red OPEN lamp off and its green CLOSE lamp on.
INITIAL CONDITION CUE: If examinee inquires as to the initial status of WDL-P-13A, inform examinee that WDL-P-13 is OFF. POSITIVE CUE: If step 5 performed correctly, inform examinee that WDL-P-13A red breaker status lamp is ON, and its green breaker status lamp is OFF. NEGATIVE CUE: If step 5 is performed incorrectly or incorrect pump control is manipulated, provide examinee with appropriate cue for action performed.	*5. Examinee starts WDL-P-13A by rotating its extension control to the START position, and verifies WDL-P-13A is running as indicated by its red breaker status lamp on and its green lamp off.	5. WDL-P-13A is running as indicated by its red breaker status lamp on, and its green breaker status lamp off. _____ SAT
	6. Examinee notifies control room that A-RBAT is aligned for emergency boration.	6. Control room notified that A-RBAT is aligned for emergency boration.
After Control Room is notified of task completion the JPM may be terminated.	(*) Denotes Critical Element.	

EVALUATION: SAT:_____ UNSAT:_____

JPM CHANGE HISTORY PAGE

REVISION	DATE	REFERENCE TITLE	DESCRIPTION (Include AI # if Appropriate)
1	10/15/99		Converted to WORD97. Changed Task Conditions so that WDL-T-13A is NOT on recirc. Initially. Improved JPM overall to make more examiner friendly and updated format.

TMI-1 OPERATOR TRAINING REQUALIFICATION PROGRAM

JOB PERFORMANCE MEASURE

POSITION: SRO/RO/AO

TITLE:	Respond to a Loss of "A" DC Distribution System
TASK NUMBER:	0000580504
EVALUATION METHOD:	PERFORM:_____ SIMULATE:__X__
EVALUATION LOCATION:	SIMULATOR:_____ IN-PLANT:__X__ CONTROL ROOM:_____
APPROXIMATE COMPLETION TIME:	12 Minutes
IMPORTANCE RATING (TIF):	TMI=4.34 NRC=4.0 AK3.02
TOOLS AND EQUIPMENT:	None
EXAMINEE REFERENCES:	EP 1202-9A, Loss of "A" DC Distribution System
10CFR55.45:	(a)(6), (8)

	Signature	Date
Submitted By:		12-15-99
Validated By:		12/15/99
Reviewed By: Lead Inst., Ops. Training or Lead Inst., Sim. Training		12/15/99
Operations Training Manager		12/16/99
Approved By: Plant Operations Director		12/17/99

SIMULATOR CONDITIONS: NA

EXAMINER PREVIEW:

This JPM deals with responding to a loss of the "A" DC distribution system - specifically two in-plant immediate manual actions: securing EG-Y-1A, and transferring the Alterrex Excitation System DC power supply to B-DC.

NOTE: If this JPM is commenced from the Control Room or nearby, it may be started at Step 6 due to the necessity of obtaining a key and the geographical locations of each task. It is NOT critical to secure EG-Y-1A prior to transferring exciter control power.

The sequence of events which should be followed in the conduct of this JPM is as follows:

1. Read or otherwise inform the Examinee of the information contained in the "EXAMINEE PREVIEW" section of this JPM.
2. Inform the Examinee of the TASK CONDITIONS.
3. Allow the Examinee to ask questions about the JPM.
4. Begin the cueing sequence as described in the EXAMINER CUES section.

A certain amount of liberty (questioning or cueing beyond the bounds of the "EXAMINER CUES") may be taken by the Examiner in trying to extract the requisite information from the Examinee, however, care must be taken to ensure that you do not COACH the Examinee.

To complete this task successfully, the Examinee must complete each critical element (an element of the task which, if omitted or performed incorrectly, would result in a failure to meet the "TASK STANDARD") correctly.

TASK STANDARDS: EG-V-15A is closed, EG-Y-1A fuel rack is tripped, and the Alterrex Excitation System DC power supply is transferred to "B" side DC power.

This sheet is available for the examinee to review

EXAMINEE PREVIEW:

For this event you are assigned the duties of the Extra CRO or Secondary AO.

The instructor/examiner will act as the Console CRO and the SF.

When you are told to begin, you will respond to the cues or indications that the examiner will provide to you verbally.

Unless otherwise informed, you are to SIMULATE all actions taken.

You are expected to maintain proper communications with the Control Room as you would in the plant for the real condition.

It is very important that you describe to the instructor/examiner the physical details of the actions that you would be taking if you were actually performing the manipulations required to complete this task. Failure to adequately describe your actions could result in a failure to meet the task standard.

You are to respond as you would in the plant for a real condition.

You are expected to wear all required safety gear in accordance with plant procedures and policies. If during a simulated task additional safety gear is required you should notify the Examiner.

Failure to use the proper safety equipment is immediate grounds for failure.

TASK CONDITIONS:

Plant is at 100% power, steady-state.

A loss of the "A" DC distribution system has occurred.

1202-9A immediate manual actions are in progress.

Your task will be to perform the 1202-9A immediate manual actions associated with securing EG-Y-1A and swapping main generator exciter control power.

EXAMINER CUES	EXAMINEE ACTIONS	STANDARD
EXAMINER-ROLE PLAY: As the Shift Foreman, direct examinee to respond to EG-Y-1A and perform the following: 1) close EG-V-15A, 2) verify starting air pressure on EMIP decreases to 0 psig, and 3) trip EG-Y-1A fuel rack.	1. Examinee responds to EG-Y-1A (red diesel) located in the Diesel Generator Building, northwest room, and locates EG-V-15A on the north side of engine, to the outside of and below the inspection skid.	1. Examinee at EG-Y-1A and EG-V-15A located by examinee.
POSITIVE CUE: If step 2 is performed correctly, inform examinee that EG-V-15A is closed and the starting air receivers are repressurizing. **NEGATIVE CUE:** If step 2 is not performed correctly, inform examinee that starting air receivers are not yet repressurizing.	*2. Examinee closes valve labeled EG-V-15A by turning its valve handle 90°, so the handle is perpendicular to the pipe.	2. EG-V-15A is closed as indicated by its valve handle being perpendicular to the pipe, and starting air receivers repressurizing. _____ SAT
POSITIVE CUE: If examinee performed step 2 correctly (EG-V-15A is closed) and locates EG-PI-535A/B, inform examinee that "Starting Air Pressure" gauges read 0 psig. **NEGATIVE CUE:** If step 2 was not performed correctly, inform examinee that "Starting Air Pressure" on EG-PI-535A/B is NOT decreasing.	3. Examinee checks "Starting Air Pressure" gauges, EG-PI-535A/B, mounted on EMIP, and verifies they decrease to zero (0) psig.	3. "Starting Air Pressure" gauges, EG-PI-535A/B, mounted on EMIP, decrease to zero (0) psig.
POSITIVE CUE: If examinee correctly performs step 4, inform examinee that the noise level from the Diesel and its speed are decreasing.	*4. Examinee trips EG-Y-1A fuel racks by depressing the "FUEL RACKS TRIP" knob located on the southwest corner of the engine.	4. EG-Y-1A fuel racks tripped as indicated by EG-Y-1A speed decreasing to zero (0). _____ SAT
NEGATIVE CUE: If step 4 was not performed correctly, inform examinee that diesel noise level and speed have not changed.	5. Examinee informs control room that EG-Y-1A tasks are complete - the diesel is shutdown.	5. Control room informed that EG-Y-1A is tripped.

EXAMINER CUES	EXAMINEE ACTIONS	STANDARD
EXAMINER-ROLE PLAY: As the SF, direct examinee to obtain Key #22, respond to the Alterrex Cabinet for the Main Generator, and transfer Excitation Control to "B" side DC power.	6. Examinee proceeds with Key #22 to the Alterrex Cabinet located in the BOP switchgear room at the south end of the 2nd floor of the Turbine Building, just north and across from the east end of 1C 4KV BOP Bus.	6. Examinee reports to the BOP switchgear room, and locates the Alterrex cabinet.
POSITIVE CUE: If steps 6 & 7 are performed correctly, inform examinee that the Alterrex Cabinet door is open. **NEGATIVE CUE:** If steps 6 & 7 are NOT performed correctly, inform examinee that Alterrex Cabinet door is NOT open.	7. Examinee opens the Alterrex Excitation cabinet using Key #22.	7. Alterrex Excitation cabinet door is open.
POSITIVE CUE: If step 8 is performed correctly, inform examinee that the Alterrex power supply switch is in the "B" DC position. **NEGATIVE CUE:** Inform the Examinee that the Alterrex power supply switch is still in the "A" DC position.	*8. Examinee transfers the Alterrex Excitation system DC power supply to "B" side DC Power by rotating the 43 SS clockwise.	8. Alterrex power on "B" side DC as indicated by 43SS pointing to "B 125VDC". _____ SAT
	9. Examinee informs control room that Excitation Control power has been transferred to B-DC supply.	9. Examinee calls the Control Room and informs the Control Room personnel of their actions.

_____

JPM may be terminated when examinee reports both tasks completed.

(*) Denotes Critical Element.

EVALUATION: SAT:_____ UNSAT:_____

JPM CHANGE HISTORY PAGE

REVISION	DATE	REFERENCE TITLE	DESCRIPTION (Include AI # if Appropriate)
1	10/31/89	NA	Modified step #2 to non-sequence critical, deleted step #3.
2	10/02/90	NA	Added steps to include tripping open of Main Generator Field Breaker, deleted follow-up questions.
3	01/17/91	NA	Modified Examiner Cues sections to include positive and negative cues.
4	12/26/95	PCR for EP 1202-9A	AI 95-286, Modified JPM to delete performance of tripping Main Generator Field Breaker and added transfer of Alterrex Excitation power due to plant modification.
5	07/23/96	NRC 71001 Inspection	AI 96-117, Upgraded JPM by removing step #2 critical task, comment from Lopez during NRC 71001 inspection. Added cue to step #7 for starting air pressure due to procedure change.
6	12/15/99		Updated format & converted to WORD97. Improved JPM editorially throughout. Swapped order of tasks to match priority in 1202-9A; i.e. diesel tripped then exciter power supply swapped. No technical changes.

TMI-1 OPERATOR TRAINING REQUALIFICATION PROGRAM

JOB PERFORMANCE MEASURE – ALTERNATE PATH

POSITION: SRO/RO/AO

TITLE:	Manually Actuate the Relay Room CO_2 System
TASK NUMBER:	086A090104
EVALUATION METHOD:	PERFORM:_____ SIMULATE:__X__
EVALUATION LOCATION:	SIMULATOR:_____ IN-PLANT:__X__ CONTROL ROOM:_____
APPROXIMATE COMPLETION TIME:	5 Minutes
IMPORTANCE RATING (TIF):	TMI=3.73 NRC=3.0 K4.06
TOOLS AND EQUIPMENT:	None
EXAMINEE REFERENCES:	None
10CFR55.45:	(a)(3), (12).

	SIGNATURE	DATE
Submitted By:	D Wright	10-5-99
Validated By:	[illegible]	12/15/99
Reviewed by: Lead Instructor, Operator Training OR Lead Instructor, Simulator Training	[illegible]	12/15/99
Operations Training Manager	R H Paulk	12/16/99
Approved By: Plant Operations Director	[illegible]	12/17/99

SIMULATOR CONDITIONS: N/A

EXAMINER PREVIEW: This JPM requires the examinee to manually actuate the relay room cardox (CO_2) system due to a fire in the relay room without automatic CO_2 system actuation. This JPM is considered alternate path because the normal method of manual actuation will not function, requiring the alternate method of manual actuation per 1104-45F.

The Examinee Preview should be conducted in the Control Room.

The sequence of events which should be followed in the conduct of this JPM is as follows:

1. Read or otherwise inform the Examinee of the information contained in the "EXAMINEE PREVIEW" section of this JPM.
2. Inform the Examinee of the TASK CONDITIONS.
3. Allow the Examinee to ask questions about the JPM. (In-Plant)
4. Begin the cueing sequence as described in the EXAMINER CUES section.

A certain amount of liberty (questioning or cueing beyond the bounds of the "EXAMINER CUES") may be taken by the Examiner in trying to extract the requisite information from the Examinee, however, care must be taken to ensure that you do not COACH the Examinee.

To complete this task successfully, the Examinee must complete each critical element (an element of the task which, if omitted or performed incorrectly, would result in a failure to meet the "TASK STANDARD") correctly.

For In-Plant JPMs additional safety gear may be required. The Examinee should inform the Examiner that additional gear is required. The Examiner will then specify if the additional safety gear is to be donned, or to be simulated after the Examinee specifies what equipment is required and where it would be located.

Failure to use the proper safety equipment is immediate grounds for failure.

TASK STANDARDS: CO_2 discharged into Relay Room for at least 3 minutes using manual pilot valve outside relay room patio entrance.

This sheet is available for the examinee to review

EXAMINEE PREVIEW:
(to be conducted in Control room)

For this event you are assigned the duties of an AO/CRO/SRO.

The instructor/examiner will act as the Shift Foreman or Supervisor.

When you are told to begin, you will respond to the cues or indications that the examiner will provide to you verbally.

Unless otherwise informed, you are to SIMULATE all actions taken.

You are expected to maintain proper communications with the Control Room as you would in the plant for a real condition.

It is very important that you describe to the instructor/examiner the physical details of the actions that you would be taking if you were actually performing the manipulations required to complete this task. Failure to adequately describe your actions could result in a failure to meet the task standard.

You are to respond as you would in the plant for a real condition.

You are expected to wear all required safety gear in accordance with plant procedures and policies. If during a simulated task additional safety gear is required you should notify the Examiner.

Failure to use the proper safety equipment is immediate grounds for failure.

TASK CONDITIONS:

The reactor has been manually tripped due to a fire in the Relay Room. The Control Room is being evacuated for the same reason.

Indications are that the Relay Room CO_2 system did not automatically actuate as designed.

EXAMINER CUES	EXAMINEE ACTIONS	STANDARD
As the Shift Foreman, direct the Examinee to manually actuate the Relay Room CO_2 System using the pushbutton station in ESAS cabinet room. NEGATIVE CUE: Inform the Examinee that "nothing has happened" – "there is no evidence that the CO_2 system has actuated."	1. Examinee proceeds to the 3rd floor of the control tower, ESAS cabinet room, and manually actuates the Relay Room CO_2 System by opening the hinged cover and depressing the pushbutton.	1. Examinee simulates actuating the Relay Room CO_2 system by opening the hinged cover and depressing the pushbutton on the manual actuation station in ESAS cabinet room.
	*2. Examinee proceeds to the Control Tower Patio at the east wall across from the CRDM Inductrol units, to the alternate CO_2 Pilot Control Cabinet.	2. Examinee locates the alternate Relay Room CO_2 System Pilot Control Cabinet outside relay room entrance from patio. _____ SAT
POSITIVE CUE: If the Examinee describes this action correctly, inform the Examinee that a rushing noise can be heard in the Relay Room and a slight Wintergreen odor can be detected. NEGATIVE CUE: If the Examinee does not describe this action correctly or in sufficient detail, inform Examinee that "nothing has happened".	*3. Examinee breaks the glass, and rotates the chrome handle ½ turn up in the counter-clockwise direction to the open position for 3 minutes.	3. Glass on Relay Room CO_2 System Pilot Control Cabinet is broken. _____ SAT Chrome handle is rotated ½ turn up in the counter-clockwise direction and position maintained for at least three (3) minutes. _____ SAT
POSITIVE CUE: If reclosure of pilot valve is described correctly, inform Examinee that CO_2 flow noise has stopped.	4. Examinee returns chrome handle in Relay Room CO_2 System Pilot Control Cabinet to its original closed position after 3 minutes.	4. Chrome handle in Relay Room CO_2 System Pilot Control Cabinet is returned to its original closed position after 3 minutes.

(*) Denotes Critical Element.

EVALUATION: SAT:_____ UNSAT:_____

JPM CHANGE HISTORY PAGE

REVISION	DATE	REFERENCE TITLE	DESCRIPTION (Include AI # if Appropriate)
3	01/08/99	N/A	Specified standard on 2nd method of initiating CO_2. Modified preview page, deleted grading sheet, converted to Word97.
4	10/05/99		Converted to alternate path JPM: normal (electrical) manual actuation station will not function – must use pilot valve.

OPERATING TEST NO.: Day-1

Applicant Type	Evolution Type	Minimum Number	Scenario Number			
			1 RO	1 BOP	2 RO	2 BOP
RO	Reactivity	1	1 (3)		1 (5)	1 (2)
	Normal	1		1 (1)		1 (1)
	Instrument	2	1 (2)	1 (4)	1 (7)	1 (3)
	Component	2	3 (2,3,7)	1 (6)	2 (8,9)	1 (6)
	Major	1	1 (5)	1 (5)	1 (4)	1 (4)

Instructions: (1) Enter the operating test number and Form ES-D-1 event numbers for each evolution type.

(2) Reactivity manipulations may be conducted under normal or *controlled* abnormal conditions (refer to Section D.4.d) but must be significant per Section C.2.a of Appendix D.

Author: _____

Chief Examiner: _____

DUPLICATE

OPERATING TEST NO.: Day-2

Applicant Type	Evolution Type	Minimum Number	Scenario Number			
			3 RO	3 BOP	4 RO	4 BOP
RO	Reactivity	1	1 (2)		1 (1)	
	Normal	1	1 (1)	1 (3)		1 (2)
	Instrument	2	1 (2)	1 (3)	1 (1)	1 (3)
	Component	2	2 (2,6)	2 (5)	2 (4,6)	2 (5)
	Major	1	1 (4)	1 (4)	1 (6)	1 (6)

Instructions: (1) Enter the operating test number and Form ES-D-1 event numbers for each evolution type.

(2) Reactivity manipulations may be conducted under normal or *controlled* abnormal conditions (refer to Section D.4.d) but must be significant per Section C.2.a of Appendix D.

Author: _____

Chief Examiner: _____

DUPLICATE

Competencies	Applicant #1 RO		Applicant #2 RO		Applicant #3 RO	
	SCENARIO		SCENARIO		SCENARIO	
	1 RO	2 BOP	2 RO	1 BOP	1 RO	2 BOP
Understand and Interpret Annunciators and Alarms	2, 3, 5, 8	3, 4	4, 7, 8	4, 5, 6, 8	2, 3, 5, 8	3, 4
Diagnose Events and Conditions	2, 3, 5, 7, 8	3, 4, 6	4, 7, 8, 9	4, 5, 6, 8	2, 3, 5, 7, 8	3, 4, 6
Understand Plant and System Response	2, 3, 5, 8	1, 2, 3, 6	4, 5, 7, 8, 9	4, 5, 6, 8	2, 3, 5, 8	1, 2, 3, 6
Comply With and Use Procedures (1)	2, 3, 5, 7, 8	1, 2, 3	4, 5, 7, 9	1, 4, 5, 6, 8	2, 3, 5, 7, 8	1, 2, 3
Operate Control Boards (2)	2, 3, 5, 7, 8	1, 2, 3, 6	4, 5, 7, 8, 9	1, 4, 5. 6, 8	2, 3, 5, 7, 8	1, 2, 3, 6
Communicate and Interact With the Crew	2, 3, 5, 7, 8	1, 2, 3, 6	4, 5, 7, 8, 9	1, 4, 5, 6, 8	2, 3, 5, 7, 8	1, 2, 3, 6

Notes:
(1) Includes Technical Specification compliance for an RO.
(2) Optional for an SRO-U.

Instructions:

Circle the applicant's license type and enter one or more event numbers that will allow the examiners to evaluate every applicable competency for every applicant.

Author: _____

Chief Examiner: _____

C O P Y DUPLICATE

Competencies	Applicant #4 RO		Applicant #5 RO		Applicant #6 RO	
	SCENARIO		SCENARIO		SCENARIO	
	2 RO	1 BOP	1 RO	2 BOP	2 RO	1 BOP
Understand and Interpret Annunciators and Alarms	4, 7, 8	4, 5, 6, 8	2, 3, 5, 8	3, 4	4, 7, 8	4, 5, 6, 8
Diagnose Events and Conditions	4, 7, 8, 9	4, 5, 6, 8	2, 3, 5, 7, 8	3, 4, 6	4, 7, 8, 9	4, 5, 6, 8
Understand Plant and System Response	4, 5, 7, 8, 9	4, 5, 6, 8	2, 3, 5, 8	1, 2, 3, 6	4, 5, 7, 8, 9	4, 5, 6, 8
Comply With and Use Procedures (1)	4, 5, 7, 9	1, 4, 5, 6, 8	2, 3, 5, 7, 8	1, 2, 3	4, 5, 7, 9	1, 4, 5, 6, 8
Operate Control Boards (2)	4, 5, 7, 8, 9	1, 4, 5. 6, 8	2, 3, 5, 7, 8	1, 2, 3, 6	4, 5, 7, 8, 9	1, 4, 5. 6, 8
Communicate and Interact With the Crew	4, 5, 7, 8, 9	1, 4, 5, 6, 8	2, 3, 5, 7, 8	1, 2, 3, 6	4, 5, 7, 8, 9	1, 4, 5, 6, 8

Notes:
(1) Includes Technical Specification compliance for an RO.
(2) Optional for an SRO-U.

Instructions:

Circle the applicant's license type and enter one or more event numbers that will allow the examiners to evaluate every applicable competency for every applicant.

Author: _____

Chief Examiner: _____

DUPLICATE

C O P Y

Competencies	Applicant #7 RO		Applicant #8 RO		Applicant #9 RO	
	SCENARIO		SCENARIO		SCENARIO	
	3 RO	4 BOP	4 RO	3 BOP	3 RO	4 BOP
Understand and Interpret Annunciators and Alarms	2, 4	3, 5, 6	4, 5, 6	3, 4	2, 4	3, 5, 6
Diagnose Events and Conditions	2, 4, 6	3, 5, 6	1, 4, 5, 6	3, 4, 5	2, 4, 6	3, 5, 6
Understand Plant and System Response	1, 2, 4, 6	2, 3, 5, 6	1, 4, 5, 6	2, 3, 4, 5	1, 2, 4, 6	2, 3, 5, 6
Comply With and Use Procedures (1)	1, 2, 4, 6	2, 3, 5, 6	1, 4, 5, 6	2, 3, 4, 5	1, 2, 4, 6	2, 3, 5, 6
Operate Control Boards (2)	1, 2, 4, 6	2, 3, 5, 6	1, 4, 5, 6	3, 4, 5	1, 2, 4, 6	2, 3, 5, 6
Communicate and Interact With the Crew	1, 2, 4, 6	2, 3, 5, 6	1, 4, 5, 6	2, 3, 4, 5	1, 2, 4, 6	2, 3, 5, 6

Notes:
(1) Includes Technical Specification compliance for an RO.
(2) Optional for an SRO-U.

Instructions:

Circle the applicant's license type and enter one or more event numbers that will allow the examiners to evaluate every applicable competency for every applicant.

Author: DWitt

Chief Examiner: BH Bridges

DUPLICATE

F 2

ES-401-7 Report
Written Exam Quality Checklist
TMI-1 February 2000 CRO License Examination

1. Questions and answers are technically accurate and applicable to facility.

2. a. NRC K/As are referenced for all questions.
   b. Facility leaarning objectives are referenced as available.

3. RO/SRO overlap is no more than 75 percent, and SRO questions are appropriate per Section D.2.d of ES-401.

   RO/SRO Questions in this Exam = 100

4. No more than 25 questions are duplicated from practice exams, quizzes, and the last 2 NRC licensing exams.

   Program Quiz Questions Duplicated in this Exam = 0

   Questions Duplicated From Last 2 TMI NRC Exams = 17

5. No (less than 5%) question duplication from the license screening/audit exam (if independently written).

   Audit Exam Questions Duplicated in this Exam = 0

6. Bank use meets limits (no more than 50% from the bank, at least 10% new, and the rest modified).

   New Questions in this Examination = 80

   TMI Exam Bank Questions in this Exam = 0

   Modified TMI Exam Bank Questions in this Exam = 3

7. Between 50 and 60 percent of the questions on the exam (including 10 new questions) are written at the comprehension/analysis level:

   Comprehension/Analysis Level Questions in this Exam = 54

8. References/handouts provided do not give away answers.

9. Question distribution meets previously approved examination guideline; deviations are justified.

10. Question psychometry quality and format meet ES, Appendix B guidelines.

11. The exam contains 100, one-point, multiple choice items, the total is correct and agrees with value on cover sheet.

Monday, December 20, 1999

Facility: Three Mile Island **Date of Exam:** February 2000 **Exam Level:** RO

Tier	Group	K/A Category Points											Point Total
		K 1	K 2	K 3	K 4	K 5	K 6	A 1	A 2	A 3	A 4	G *	
1. Emergency & Abnormal Plant Evolutions	1	3	4	3				3	2			1	16
	2	1	1	2				6	6			1	17
	3	2	–	–				1	–			–	3
	Tier Totals	6	5	5				10	8			2	36
2. Plant Systems	1	4	2	1	3	3	1	2	3	2	1	1	23
	2	2	–	1	4	1	1	2	1	1	5	2	20
	3	–	–	–	2	–	–	2	1	–	2	1	8
	Tier Totals	6	2	2	9	4	2	6	5	3	8	4	51

3. Generic Knowledge and Abilities	Cat 1	Cat 2	Cat 3	Cat 4	13
	5	4	2	2	

Note:
1. Ensure that at least two topics from every K/A category are sampled within each tier (i.e., the "Tier Totals" in each K/A category shall not be less than two).
2. Actual point totals must match those specified in the table.
3. Select topics from many systems; avoid selecting more than two or three K/A topics from a given system unless they relate to plant-specific priorities.
4. Systems/evolutions within each group are identified on the associated outline.
5. The shaded areas are not applicable to the category/tier.
6. * The generic K/As in Tiers 1 and 2 shall be selected from Section 2 of the K/A Catalog, but the topics must be relevant to the applicable evolution or system.
7. On the following pages, enter the K/A numbers, a brief description of each topic, the topics' importance ratings for the RO license level, and the point totals for each system and category. K/As below 2.5 should be justified on the basis of plant-specific priorities. Enter the tier totals for each category in the table above.

C O P Y

E/APE # / Name / Safety Function	K1	K2	K3	A1	A2	G	K/A Topic(s)	Imp.	Points
000005 Inoperable/Stuck Control Rod / 1	.02						AK1.01 Page 4.2-6 CFR41.8 Q # 001 Operational implications of quadrant power tilt.	3.1	1.0
000015/17 RCP Malfunctions / 4				.02			AA1.02 Page 4.2-11 CFR41.7 Q # 002 Ability to operate/monitor oil reservoir level level/alarms.	2.8	1.0
BW/E09; CE/A13; W/E09&E10 Natural Circ. / 4		.2					EK2.2 Page 4.3-15 CFR41.7 Q # 003 Heat removal systems operational interrelationships.	4.0	1.0
000024 Emergency Boration / 1				.26			AA1.26 Page 4.2-15 CFR41.7 Q # 004 Operate/Monitor Boric Acid Mix Tank level.	3.3	1.0
000026 Loss of Component Cooling Water / 8					.02		AK2.02 Page 4.2-19 CFR45.13 Q # 005 ID cause of possible loss of ICCW/NSCCW system.	2.9	1.0
000027 Pressurizer Pressure Control System Malfunction / 3		.03					AK2.03 Page 4.2-20 CFR41.7 Q # 006 Predict/monitor/control effects of Pzr pressure control malfunction (transmitter fails low).	2.6	1.0
000040 (BW/E05; CE/E05; W/E12) Steam Line Rupture - Excessive Heat Transfer / 4	.05						AK1.05 Page 4.2-31 CFR41.8 Q # 007 Reactivity effects of excessive C/D on Steam Line Break.	4.1	1.0
CE/A11; W/E08 RCS Overcooling - PTS / 4									
000051 Loss of Condenser Vacuum / 4									
000056 Station Blackout / 6	.04						AK1.04 Page 4.2-37 CFR41.8 Q # 008 Definition of saturated water conditions.	3.1	1.0
000057 Loss of Vital AC Elec. Inst. Bus / 6			.01				AK3.01 Page 4.2-41 CFR41.5 Q # 009 EP actions for loss of instrumentation bus (Auto or Hand/Auto Power).	4.1	1.0
000062 Loss of Nuclear Service Water / 4			.03				AK3.03 Page 4.2-49 CFR41.4 Q # 010 Actions for loss of NR cooling system.	4.0	1.0
000067 Plant Fire On-site / 9					.05		AA2.05 Page 4.2-53 CFR45.13 Q # 011 Actions to secure ventilation to area affected by a fire.	3.2	1.0
000068 (BW/A06) Control Room Evac. / 8				.23			AA1.23 Page 4.2-55 CFR41.7 Q # 012 Manual trip of reactor & turbine on CR evacuation.	4.3	1.0
000069 (W/E14) Loss of CTMT Integrity / 5									
000074 (W/E06&E07) Inad. Core Cooling / 4									
BW/E03 Inadequate Subcooling Margin / 4						2.2	2.2.2 Page 2-5 CFR45.2 Q # 013 Control manipulations during inadequate core cooling.	4.0	1.0
000076 High Reactor Coolant Activity / 9		.01					AK2.01 Page 4.2-58 CFR41.7 Q # 014 RMS response to high RCS activity.	2.6	1.0
BW/A02&A03 Loss of NNI-X/Y / 7 **(HAND POWER)**			.2				AK3.2 Page 4.3-29 CFR41.5, .10 Q # 015 Loss of NNI Hand Power EP IAs.	3.7	1.0
000040 (BW/E05; CE/E05; W/E12) Steam Line Rupture – Excessive Heat Transfer / 4		.01					AK2.01 Page 4.2-31 CFR41.7 Q # 016 HSPS Valve response to Main Steam line rupture.	2.6	1.0
K/A Category Totals:	3	4	3	3	2	1	Group Point Total: 16		16

COPY

E/APE # / Name / Safety Function	K1	K2	K3	A1	A2	G	K/A Topic(s)	Imp.	Points
000001 Continuous Rod Withdrawal / 1					.01		AA2.03 Page 4.2-3 CFR45.13 Q # 017 Indications of Rx trip breaker status following manual trip for continuous rod withdrawal with high startup rate.	4.2	1.0
000003 Dropped Control Rod / 1						4.1	2.4.1 Page 2-11 CFR41.10 Q # 018 Dropped control or safety rod EP entry conditions, actions.	4.3	1.0
000007 (BW/E02&E10; CE/E02) Reactor Trip – Stabilization - Recovery / 1				.2			EA1.2 Page 4.3-19 CFR41.7 Q # 019 Operate/monitor operating behavior characteristics for Rx Trip.	3.5	1.0
BW/A01 Plant Runback / 1				.1			AA1.1 Page 4.3-27 CFR41.7 Q # 020 Actions for failure of ICS runback to occur.	3.7	1.0
BW/A04 Turbine Trip / 4				.1			AA1.1 Page 4.3-33 CFR41.7 Q # 021 Operate/monitor turbine trip interlocks.	3.5	1.0
000008 Pressurizer Vapor Space Accident / 3					.30		AA2.30 Page 4.2-9 CFR45.13 Q # 022 ID loss of SCM - inadequate cooling on Pzr steam space leak.	4.3	1.0
000009 Small Break LOCA / 3		.03					EK2.03 Page 4.1-4 CFR41.5/10 Q # 023 ID why PSHT is required on Small Break LOCA.	3.0	1.0
			.17				EK3.17 Page 4.1-4 CFR41.4/10 Q # 024 Containment isolation interlocks on Small Break LOCA.	4.0	1.0
000011 Large Break LOCA / 3					.11		EA2.11 Page 4.1-8 CFR45.13 Q # 025 ID requirement for throttling HPI flow.	3.9	1.0
W/E04 LOCA Outside Containment / 3									
BW/E08 W/E03 LOCA Cooldown/Depress. / 4									
W/E11 Loss of Emergency Coolant Recirc. / 4									
W/EO1 & E02 Rediagnosis & SI Termination / 3									
000022 Loss of Reactor Coolant Makeup / 2				.06			AA1.01 Page 4.2-13 CFR41.7 Q # 026 MUP ammeters/indicators during loss of MU.	2.9	1.0
000025 Loss of RHR System / 4			.02				AK3.02 Page 4.2-16 CFR41.5/10 Q # 027 ID reason for DH-V-1 & DH-V-2 400# interlocks.	3.3	1.0
000029 Anticipated Transient w/o Scram / 1									
000032 Loss of Source Range NI / 7									
000033 Loss of Intermediate Range NI / 7									
000037 Steam Generator Tube Leak / 3					.12		AA2.12 Page 4.2-30 CFR45.13 Q # 028 Analyze data to determine value of OTSG Tube Leak flow rate.	3.3	1.0
000038 Steam Generator Tube Rupture / 3									
000054 (CE/E06) Loss of Main Feedwater / 4					.03		AA2.03 Page 4.2-36 CFR45.13 Q # 029 ID conditions/reasons for EFW start following (LOFW) loss of FPs.	4.1	1.0
BW/E04; W/E05 Inadequate Heat Transfer - Loss of Secondary Heat Sink / 4	.2						EK1.2 Page 4.3-7 CFR41.8/10 Q # 030 Explain why RCPs are required to be tripped if RCS ~~superheated~~ saturated.	4.0	1.0
000058 Loss of DC Power / 6				.01			AA1.01 Page 4.2-43 CFR41.7 Q # 031 ID basis for AC/DC breaker ops during charger restoration following loss of DC.	3.4	1.0
000059 Accidental Liquid RadWaste Rel. / 9									
000060 Accidental Gaseous RadWaste Rel. / 9					.05		AA2.05 Page 4.2-47 CFR45.13 Q # 032 Automatic RMS actions for accidental radioactive gas release.	3.7	1.0
000061 ARM System Alarms / 7				.01			AA1.01 Page 4.2-48 CFR41.7 Q # 033 Automatic RMS (RM-A-X) interlock.	3.6	1.0
W/E16 High Containment Radiation / 9									
CE/E09 Functional Recovery									
K/A Category Point Totals:	1	1	2	6	6	1	Group Point Total: 17		17

COPY

E/APE # / Name / Safety Function	K1	K2	K3	A1	A2	G	K/A Topic(s)	Imp.	Points
000028 Pressurizer Level Malfunction / 2				.03			AA1.03 Page 4.2-23 CFR41.7 Q # 034 Operation of RCP Seal Injection during Pzr Level Control malf.	2.9	1.0
000036 (BW/A08) Fuel Handling Accident / 8									
000056 Loss of Off-site Power / 6									
000065 Loss of Instrument Air / 8									
BW/E13&E14 EOP Rules and Enclosures	.2						EK1.2 Page 4.3-21 CFR41.8/10 Q # 035 1210-10 ATOG Rule/Guideline Question.	3.0	1.0
BW/A05 Emergency Diesel Actuation / 6	.2						AK2.1 Page 4.3-34 CFR41.7 Q # 036 OP/EP regarding actuation of EDGs.	4.0	1.0
BW/A07 Flooding / 8									
CE/A16 Excess RCS Leakage / 2									
W/E13 Steam Generator Over-pressure / 4									
W/E15 Containment Flooding / 5									
K/A Category Point Totals:	2			1			Group Point Total: 3		3

COPY

System # / Name	K1	K2	K3	K4	K5	K6	A1	A2	A3	A4	G	K/A Topic(s)	Imp	Pts
001 Control Rod Drive				.15								K4.15 Page 3.1-4 CFR41.7 Q # 037 Operation of latch controls.	2.7	1.0
001 Control Rod Drive						.11						K6.11 Page 3.1-8 CFR41.7 Q # 038 Asymmetric rod fault detection/alarms.	2.9	1.0
003 Reactor Coolant Pump		.02										K2.02 Page 3.4-6 CFR41.7 Q # 039 ICCW pump PSs.	2.5	1.0
003 Reactor Coolant Pump							.05					A1.05 Page 3.4-8 CFR 41.5 Q # 040 RCP low flow protection.	3.4	1.0
004 Chemical and Volume Control							.09					A1.09 Page 3.2-12 CFR41.5 Q # 041 MU Sys. ops to prevent RCS over P/T.	3.6	1.0
004 Chemical and Volume Control									.02			A3.02 Page3.2-14 CFR41.7 Q # 042 Automatic RCS letdown isolation.	3.6	1.0
013 Engineered Safety Features Actuation	.03											K1.03 Page 3.2-24 CFR41.2-.9 Q #043 CCS response to ESAS actuation.	3.8	1.0
013 Engineered Safety Features Actuation								.01				A2.01 Page 3.2-26 CFR41.5 Q # 044 ESAS LOCA response.	4.6	1.0
013 Engineered Safety Features Actuation				.11								K4.11 Page 3.2-25 CFR41.7 Q #045 ESAS interlocks which provide for vital power load control.	3.2	1.0
015 Nuclear Instrumentation			.04									K3.04 Page 3.7-5 CFR41.7 Q # 046 Effect of loss of NI signal to ICS at power.	3.4	1.0
015 Nuclear Instrumentation				.08								K4.08 Page 3.7-6 CFR41.7 Q # 047 $_{0}N^{1}$ error rod motion command signal.	3.4	1.0
017 In-core Temperature Monitor					.02							K5.02 Page 3.7-11 CFR41.5 Q # 048 Use of ITC to determine SCM.	3.7	1.0
022 Containment Cooling								.04				A2.04 Page 3.5-6 CFR41.5 Q # 049 Instrument accuracy effects due to post-LOCA atmosphere.	2.9	1.0
025 Ice Condenser														
056 Condensate								.04				A2.04 Page 3.4-39 CFR41.5 Q # 050 Impact of loss of Cond. pump at low power level.	2.6	1.0
056 Condensate	.03											K1.03 Page 3.4-36 CFR41.2-.9 Q#051 MFW/Condensate System interrelations.	2.6	1.0
059 Main Feedwater	.07											K1.07 Page 3.4-41 CFR41.2-.9 Q # 052 MFW/ICS interrelations.	3.2	1.0
059 Main Feedwater											1.30	2.1.30 Page 2-4 CFR41.7 Q # 053 Local/manual Main FW controls.	3.9	1.0
061 Auxiliary/Emergency Feedwater		.02										K2.02 Page 3.4-45 CFR41.7 Q # 054 EF-P-2A/B power supplies.	3.7	1.0
061 Auxiliary/Emergency Feedwater					.01							K5.01 Page 3.4-46 CFR41.5 Q # 055 RCS heat transfer using EFW.	3.6	1.0
068 Liquid Radwaste										.02		A4.02 Page 3.9-4 CFR41.7 Q # 056 Monitor/control liquid rad. Release.	3.2	1.0
071 Waste Gas Disposal					.04							K5.04 Page 3.9-6 CFR41.5 Q # 057 H_2/O_2 flammability concentrations.	2.5	1.0
072 Area Radiation Monitoring	.04											K1.04 Page 3.7-13 CFR41.2-.9 Q#058 Control Bldg ventilation RMS interlocks.	3.3	1.0
072 Area Radiation Monitoring									.01			A3.01 Page 3.7-14 CFR41.7 Q # 059 RMS ventilation alignment changes.	2.9	1.0
K/A Category Point Totals:	4	2	1	3	3	1	2	3	2	1	1	Group Point Total: 23		23

System # / Name	K1	K2	K3	K4	K5	K6	A1	A2	A3	A4	G	K/A Topic(s)	Imp	Pts
002 Reactor Coolant					.11							K5.11 Page 3.4-3 CFR41.5 Q # 060 Primary to Secondary Heat Transfer B-C Cooling elevation requirements.	4.0	1.0
006 Emergency Core Cooling										.06		A4.06 Page 3.2-20 CFR41.7 Q # 061 ESAS manual controls.	4.4	1.0
010 Pressurizer Pressure Control											4.49	2.4.49 Page 2-16 CFR41.10 Q # 062 Response to WR T_c failure low.	4.0	1.0
011 Pressurizer Level Control						.03						K6.03 Page 3.2-22 CFR41.7 Q # 063 Pzr level instr. failure effect on heater cutout intlk.	3.3	1.0
012 Reactor Protection	.03											K1.03 Page 3.7-2 CFR41.2-.9 Q # 064 RPS-CRD System interface.	3.7	1.0
014 Rod Position Indication							.02					A1.02 Page 3.1-22 CFR41.5 Q # 065 ID actions required to prevent violation of rod insertion index limit.	3.2	1.0
016 Non-nuclear Instrumentation				.03								K4.03 Page 3.7-10 CFR41.7 Q # 066 NNI input to control systems.	2.8	1.0
026 Containment Spray										.01		A4.01 Page 3.5-13 CFR41.7 Q # 067 Manual operation of RB Spray System.	4.5	1.0
029 Containment Purge				.03								K4.03 Page 3.8-6 CFR 41.7 Q # 068 RB Purge automatic isolation interlocks.	3.2	1.0
033 Spent Fuel Pool Cooling									.02			A3.02 Page 3.8-10 CFR41.7 Q # 069 SF Cooling response to spent fuel leak/rupture.	2.9	1.0
035 Steam Generator							.01					A1.01 Page 3.4-16 CFR 41.5 Q # 070 OTSG LLL control on plant SU/SD with 3 RCPs.	3.6	1.0
039 Main and Reheat Steam										.04		A4.04 Page 3.4-22 CFR41.7 Q # 071 EF-P-1 auto/manual operation.	3.8	1.0
055 Condenser Air Removal	.06											K1.06 Page 3.4-33 CFR 41.2-.9 Q # 072 Condenser off-gas/RMS relationship for low vacuum w/ADVs open.	2.6	1.0
062 AC Electrical Distribution										.02		A4.02 Page 3.6-5 CFR 41.7 Q # 073 CS, light status with BDDs in various positions.	2.5	1.0
063 DC Electrical Distribution				.01								K4.01 Page 3.6-6 CFR41.7 Q # 074 1M DC Bus automatic transfer interlocks.	2.7	1.0
064 Emergency Diesel Generator											1.30	2.1.30 Page 2-4 CFR41.7 Q # 075 Operate EDG.	3.9	1.0
073 Process Radiation Monitoring										.02		A4.02 Page 3.7-16 CFR41.7 Q # 076 Manually operate/back-up RMS auto interlocks.	3.7	1.0
075 Circulating Water								.03				A2.03 Page 3.8-16 CFR41.5 Q # 077 Auto/manual actions for loss of CW/low vacuum.	2.5	1.0
079 Station Air				.01								K4.01 Page 3.8-21 CFR41.7 Q # 078 Service Air to Instrument Air cross-tie.	2.9	1.0
086 Fire Protection			.01									K3.01 Page 3.8-23 CFR=41.7 Q # 079 Shutdown capability w/redundant equipment following failure of Fire Protection System.	2.7	1.0
K/A Category Point Totals:	2	–	1	4	1	1	2	1	1	5	2	Group Point Total: 20		20

System # / Name	K1	K2	K3	K4	K5	K6	A1	A2	A3	A4	G	K/A Topic(s)	Imp	Pts
005 Residual Heat Removal								.04				A2.04 Page 3.4-13 CFR 41.5 Q # 080 Predict/mitigate impact of DHR valve failure.	2.9	1.0
007 Pressurizer Relief/Quench Tank														
008 Component Cooling Water				.09								K4.09 Page 3.8-3 CFR 41.7 Q # 081 IC-P-1A/1B automatic standby start interlock.	2.7	1.0
027 Containment Iodine Removal										.02		A4.02 Page 3.5-15 CFR41.7 Q # 082 Kidney filter iodine removal system operation – charcoal filter protection.	2.8	1.0
028 H_2 Recombiner/Purge Control														
034 Fuel Handling Equipment							.02					A1.02 Page 3.8-13 CFR41.5 Q # 083 FH actions for Refueling Canal low level.	2.9	1.0
041 Steam Dump/TBV Control										.06		A4.06 Page 3.4-25 CFR41.7 Q # 084 Manual Atmospheric Dump Valve control.	2.9	1.0
045 Main Turbine Generator				.47								K4.47 Page 3.4-29 CFR41.7 Q # 085 Source of turbine trip signal from reactor trip.	4.0	1.0
076 Service Water							.02					A1.02 Page 3.4-50 CFR=41.5 Q # 086 Loss of RW Sys effects on SCCS temperatures.	2.6	1.0
078 Instrument Air											4.4	2.4.4 Page 2-11 CFR41.10 Q # 087 Use symptoms to ID required entry to EOP/AbP.	4.0	1.0
103 Containment														
K/A Category Point Totals:	–	–	–	2	–	–	2	1	–	2	1	Group Point Total: 8		8

Plant-Specific Priorities

System / Topic	Recommended Replacement for.	Reason	Points
Plant-Specific Priority Total: (limit 10)			

COPY

Facility: Three Mile Island Date of Exam: February 2000 Exam Level: RO

Category	K/A #	Topic	Imp.	Points
Conduct of Operations	2.1.29	Page 2- 4 CFR 41.10 Q # 088 Performance of valve lineup, independent verification.	3.4	1.0
	2.1.2	Page 2-1 CFR 41.10 Q # 089 Control Room Operator responsibilities - trip Rx if ...	3.0	1.0
	2.1.1	Page 2-1 CFR = 41.10 Q # 090 Conduct of Operations question.	3.7	1.0
	2.1.25	Page 2-3 CFR = 41.10 Q # 091 Given plant operational data, interpret graph to determine low gas pressure T-G load limit.	2.8	1.0
	2.1.30	Page 2-4 CFR = 41.7 Q # 092 MOV local manual operations requirements – AP 1029.	3.9	1.0
	Total			5
Equipment Control	2.2.11	Page 2-6 CFR = 41.10 Q # 093 Documentation and approval requirements for temporary valve lineup changes.	2.5	1.0
	2.2.12	Page 2-6 CFR = 41.10 Q # 094 Actions required when surveillance procedure acceptance criteria is not met.	3.0	1.0
	2.2.13	Page 2-6 CFR = 41.10 Q # 095 Approval requirements for operation of blue-tagged equipment.	3.6	1.0
	2.2.13	Page 2-6 CFR = 41.10 Q # 096 Clearance requirements for maintenance to work on tagged equipment.	3.6	1.0
	Total			4
Radiation Control	2.3.1	Page 2-9 CFR = 41.12 Q # 097 Approval requirements for emergency condition exposures over normal limits.	2.6	1.0
	2.3.2	Page 2-9 CFR = 41.12 Q # 098 Knowledge of facility ALARA program.	2.5	1.0
	Total			2
Emergency Procedures/ Plan	2.4.2	Page 2-11 CFR = 41.7 Q # 099 Given setpoints, interlocks, automatic actions, enter correct EOP.	3.9	1.0
	2.4.31	Page 2-14 CFR = 41.10 Q # 100 Use of alarms/indicators to identify EP entry is required.	3.3	1.0
	Total			2
Tier 3 Point Total (RO)				13

C O P Y

NRC Cognitive Level Rating Distribution

(50 - 60 are REQUIRED to be at the Comprehension/Analysis Levels)

1=46 2=36 3=18

New Exam Questions Report

NRC CRO Licensing Examination
Three Mile Island Nuclear Station
February 2000

Q #	NRC Cognitive Level	Q #	NRC Cognitive Level	Q #	NRC Cognitive Level
001	3	039	1	078	1
002	1	040	1	079	1
003	3	041	1	081	2
004	2	042	2	082	1
005	1	043	1	083	1
006	2	044	3	084	1
007	2	045	2	085	1
008	2	046	2	086	2
009	1	047	2	089	2
010	1	048	2	094	1
011	1	050	3	096	1
012	1	053	2	098	2
013	2	054	2		
014	1	056	1		
015	3	057	1		
016	3	058	1		
017	2	059	1		
018	2	060	3		
020	3	061	2		
021	2	062	2		
022	3	063	1		
023	1	064	2		
024	1	065	2		
025	3	066	3		
026	2	067	2		
027	1	068	1		
028	2	069	1		
029	2	070	2		
031	1	071	1		
033	1	072	2		
034	2	073	2		
036	1	074	1		
037	2	075	1		
038	2	076	1		

Nuclear Regulatory Commission
CRO Licensing Examination
Three Mile Island Nuclear Station
February 2000

Answer Distribution Report

A=22 B=27 C=24 D=27

A	B	C	D
007	006	002	001
009	008	003	004
010	021	011	005
015	022	014	012
016	031	017	013
019	032	018	020
025	035	024	023
026	038	030	027
028	040	034	042
029	045	037	043
033	047	046	044
036	050	048	053
039	051	049	054
041	052	057	056
058	055	060	066
061	059	069	072
064	062	074	073
068	063	075	076
070	065	084	077
071	067	088	080
087	078	091	081
099	079	092	083
	082	094	085
	086	095	090
	089		093
	097		096
	100		098

Modified TMI Exam Bank Questions Report

NRC CRO Licensing Examination
Three Mile Island Nuclear Station
February 2000

---

030 From the list below, identify the ONE (1) statement that describes the basis for the procedural requirement to trip all operating Reactor Coolant Pumps under saturated coolant conditions.

A. Increase High Pressure Injection flow.

B. Protect the Reactor Coolant Pump Motor.

C. Minimize the rate of RCS mass inventory loss.

D. Prevent Reactor Coolant Pump #1 Seal damage.

Correct Answer: C

Parent Question: QR5E02-02-Q01

Parent Question Text Identify the reason for tripping all Reactor Coolant Pumps on a loss of 25 degrees F Subcooling Margin:
A. To protect the Reactor Coolant Pump Motor.
B. To protect the Reactor Coolant Pump from cavitation damage.
C. To increase HPI flow.
D. To minimize the rate of RCS inventory loss.
ANSWER: D

Question Modification Description Changed stem conditions to address saturated coolant conditions, and changed wording to identify basis for required actions. Replaced original distracter B.

Comments Parent question QR5E-02-Q01 was not used on program quizzes or Audit Exams.

Modified TMI Exam Bank Questions Report

NRC CRO Licensing Examination
Three Mile Island Nuclear Station
February 2000

---

091 Plant conditions:
- Maximum Generation Emergency declared.
- Reactor power is 100%.
- Generator MVAR loading is 460 MVARS OUT.
- Main Generator Hydrogen pressure is 60 psig.

Refer to the attached Figure B-2B from OP 1106-1. From the list of values provided below, identify the MAXIMUM GENERATOR MEGAWATT OUTPUT CAPABILITY for these conditions.

A. 0 MW.

B. 600 MW.

C. 800 MW.

D. 870 MW.

Correct Answer: C

Parent Question: QR4C09-20-Q01

Parent Question Text

Plant Conditions:
- Plant operating at 100% power
- Main Generator H2 leak has occurred
- Generator machine gas pressure is 30 psig and H2 leak secured
- Plant MVAR loading is +180 MVAR

From the list of values below, choose the MAXIMUM generator megawatt output allowed for these plant conditions (select ONE):

A. 725 MW
B. 775 MW
C. 825 MW
D. 875 MW

ANSWER:
B (1.0) (Actual limit is 800 MW IAW Figure B-2B)

Question Modification Description

Stem no longer includes hydrogen gas leak (effects of low generator gas pressure).
All 3 distracters were changed.
New value for correct answer.

Comments Parent question was not used during program quizzes nor Audit Exams.

Modified TMI Exam Bank Questions Report

NRC CRO Licensing Examination
Three Mile Island Nuclear Station
February 2000

---

099 From the list below, identify the ONE (1) condition that requires entry into EP 1202-33, Tornado/High Winds.

A. A Tornado Watch has been issued by the National Weather Service.

B. Wind Speed Recorder (NWS-R-501E) indicates sustained wind speed of 45 mph.

C. Wind Speed Recorder (NWS-R-501E) indicates sustained wind speed of 40 mph with gusts up to 55 mph.

D. System Dispatcher identifies unstable grid conditions due to a storm in the Philadelphia area.

Correct Answer: A

Parent Question: SR5D15-01-Q01

Parent Question Text What condition, that can be monitored from the Control Room, would require entry into EP 1202-33 (Tornado/High Winds) procedure? (Answer must include appropriate value.)

ANSWER:
Wind speed indicates sustained (0.5) > or equal to 50 mph on the wind speed recorder. (0.5)
OR
Wind speed indicates sustained (0.5) > or equal to 50 mph on the Plant Computer (0.5)
OR
Tornado/High wind storm WATCH or WARNING issued by National Weather Service (1.0)

Note: If Examinee states (> 50 MPH only) with no = sign, deduct .1

Question Modification Description Modified stem, added distracters - parent question SR5D15-01-Q01 is an essay question which asks examinee to identify procedure entry conditions from memory.

Comments Parent question SR5D15-01-Q01 was used on Program Quizzes dated 5/13/99 and 5/18/99. SR5D15-01-Q01 was not used in either Audit exam.

Previously Used NRC Exam Questions

NRC CRO Licensing Examination
Three Mile Island Nuclear Station
February 2000

Q #	TMI NRC Exam Date
052	1995 TMI RO
087	1995 TMI RO
090	1995 TMI RO
092	1995 TMI RO
019	1998 TMI SRO
032	1998 TMI SRO
035	1998 TMI SRO
049	1998 TMI SRO
051	1998 TMI SRO
055	1998 TMI SRO
077	1998 TMI SRO
080	1998 TMI SRO
088	1998 TMI SRO
093	1998 TMI SRO
095	1998 TMI SRO
097	1998 TMI SRO
100	1998 TMI SRO

Nuclear Regulatory Commission
CRO Licensing Examination
Three Mile Island Nuclear Station
February 2000

Examination Question Source Report

001 New.

002 New.

003 New.

004 New.

005 New.

006 New.

007 New.

008 New.

009 New.

010 New.

011 New.

012 New.

013 New.

014 New.

015 New.

016 New.

017 New.

018 New.

019 1998 TMI SRO Exam Question 48 (QR 5E04-07-Q11).

020 New.

021 New.

022 New.

023 New.

024 New.

025 New.

026 New.

027 New.

028 New.

029 New.

030 Modified QR5E02-02-Q01

031 New.

032 1998 TMI SRO Exam Question 65.

033 New.

034 New.

035 1998 TMI SRO Exam Question 87.

036 New.

037 New.

038 New.

039 New.

040 New.

041 New.

042 New.

043 New.

044 New.

045 New.

046 New.

047 New.

048 New.

049 1998 TMI SRO Exam Question 37.

050 New.

051 1998 TMI SRO Exam Question 29.

052 1995 TMI RO Exam Question 1.

053 New.

054 New.

055 1998 TMI SRO Exam Question 82.

056 New.

057 New.

058 New.

Nuclear Regulatory Commission
CRO Licensing Examination
Three Mile Island Nuclear Station
February 2000

Examination Question Source Report

059 New.

060 New.

061 New.

062 New.

063 New.

064 New.

065 New.

066 New.

067 New.

068 New.

069 New.

070 New.

071 New.

072 New.

073 New.

074 New.

075 New.

076 New.

077 1998 TMI SRO Exam Question 69.

078 New.

079 New.

080 1998 TMI SRO Question 32 (AL4B01-13-Q01).

081 New.

082 New.

083 New.

084 New.

085 New.

086 New.

087 1995 TMI RO Exam Question 63.

088 1998 TMI SRO Exam Question 33.

089 NEW (ANO 1998 RO Exam Question #_____).

090 1995 TMI RO Exam Question 18.

091 MODIFIED QR4C09-20-Q01.

092 1995 TMI RO Exam Question 20.

093 1998 TMI SRO Exam Question 49.

094 New.

095 1998 TMI SRO Exam Question 11 (AL5A01-02-Q04).

096 New.

097 1998 TMI SRO Exam Question 6.

098 New.

099 MODIFIED SR5D15-01-Q01.

100 1998 TMI SRO Exam Question 22 (SR5D16-02-Q02).

Authorized Open References

Nuclear Regulatory Commission
CRO Licensing Examination
Three Mile Island Nuclear Station
February 2000

Q #	Authorized Open Reference	Justification
019	Steam Tables.	TMI Obj. # V.E.04.07 Given plant conditions determine if entry is required into ATP 1210-4, Lack of Heat Transfer, and state the required immediate actions.
022	Steam Tables.	TMI Obj. # V.G.04.05 Explain Pressurizer level indication response when the RCS is saturated (PORV open or closed).
025	Steam Tables.	TMI Obj. # V.E.10.08 Given plant condition/status determine what "Rules" of ATP 1210-10 Abnormal Transient Rules, Guides and Graphs, apply and what actions are required to be taken.
028	ARP MAP C-1-1, Radiation Level Hi, Rev. 20, Page 13.	TMI Obj. # V.B.13.06 Perform a primary to secondary "HAND" mass balance calculation IAW alarm response procedure C-1-1.
048	Steam Tables.	TMI Obj. # V.E.10.08 Given plant condition/status determine what "Rules" of ATP 1210-10 Abnormal Transient Rules, Guides and Graphs, apply and what actions are required to be taken.
073	SS-208-138, Rev. 3.	TMI Obj. # IV.G.04.04 Describe the mechanical interlocks associated with racking in and out 7KV, 4KV, and 480 VAC circuit breakers.
091	OP 1106-1, Turbine Generator, Rev. 94, Figure B-2B (Rev. 94), Page 59.	TMI Obj. # IV.C.09.20 Explain the relationship between main generator H2 pressure and allowable generator electrical load.

Examination References Report
- Composite Listing -

Nuclear Regulatory Commission
CRO Licensing Examination
Three Mile Island Nuclear Station
February 2000

Reference Doc ID	Q #	Reference Doc ID	Q #
TS Table 2.3-1, Page 2-10, Amendment 184. ATP 1210-1, Reactor Trip, Rev. 40, Page 2.	089	SS-208-138, Rev. 3.	073
		SP 1301-1, Shift and Daily Checks, Rev. 134, Pages 10 & 19. AP 1001J, Technical Specification Surveillance Testing Program, Rev. 21, Sections 4.3 and 4.3.1, Pages 7 through 10.	094
TS Basis for 3.1.12.3b Amendment 216, Page 3.18f, Amendment 186.	041		
TS 2.3.1b, Page 2-7, Amendment 184.	040		
		OS-24, ATOG Theory and Practice, Rev. 1, Page 5.	023
TMI-1 FSAR, Chapter 6, Engineered Safeguards, Page 6.1-12 (34), Update-14 dated 4/98.	024		
		OPM Section N-08, Safety Analysis, Rev. 3, Pages 33 and 34.	007
Steam Tables.	022		
		OPM Section M-02, Instrument & Control Air System, Rev. 18, Page 17.	078
SS-209-050, Rev. 3.	074		
		OPM Section I-01, Emergency Feedwater, Rev. 12, Page 12.	071
SS-208-213, Rev. 6. SS-208-216, Rev. 9.	026		

Examination References Report
- Composite Listing -

Nuclear Regulatory Commission
CRO Licensing Examination
Three Mile Island Nuclear Station
February 2000

Reference Doc ID	Q #	Reference Doc ID	Q #
OPM Section G-01, Condensate System, Rev. 13, Page 7.	051	OPM Section A-01, BOP and 1E Electrical Distribution (Including Substation), Rev. 18, Page 83.	054
OPM Section F-02, Reactor Protection System, Rev 8 Page 117	017	Operations Training Handout 3210-99-067, High Temperature Isolation of Letdown Line, dated 8/13/99.	042
OPM Section B-10, Intermediate Closed Cooling Water System, Rev. 8, Page 9.	081	OP 1107-3, Diesel Generator, Rev. 90, Pages 7 and 25.	036
OPM Section B-09, Reactor Building Spray, Rev. 4, Page 5.	067	OP 1107-3, Diesel Generator, Rev. 90, Page 22.	075
OPM Section B-06, Decay Heat Removal System, Rev. 16, Page 6.	027	OP 1107-2, Emergency Electrical System, Rev. 72, Page 20.	031
OPM Section B-04, Once Through Steam Generator, Rev. 8, Page 10.	055	OP 1106-1, Turbine Generator, Rev. 94, Figure B-2B (Rev. 94), Page 59.	091

Examination References Report
- Composite Listing -

Nuclear Regulatory Commission
CRO Licensing Examination
Three Mile Island Nuclear Station
February 2000

Reference Doc ID	Q #	Reference Doc ID	Q #
OP 1105-9, Control Rod Drive System, Rev. 56, Page 48. OPM Section F-01, Control Rod Drive System, Rev. 7, Page 87. OPM Section F-03, Integrated Control System, Rev. 9, Page 46.	047	OP 1105-3, Safeguards Actuation System, Rev. 40, Page 19.	068
		OP 1104-29S, Transfers from the Waste Evaporator Condensate Storage Tanks, Rev. 54, Page 14.	056
OP 1105-4, Integrated Control System, Rev. 60, Page 44.	084		
		OP 1104-27, Waste Disposal - Gaseous, Rev. 63, Page 4.	057
OP 1105-3, Safeguards Actuation System, Rev. 40, Pages 15 & 16.	061		
		OP 1103-4, Soluble Poison Concentration Control, Rev. 50, Page 21.	004
OP 1105-3, Safeguards Actuation System, Rev. 40, Page 23. OPM Section B-10, Intermediate Closed Cooling Water System, Rev. 8, Page 6.	043		
		OP 1102-4, Power Operation, Rev. 84, Page 8.	065
		OP 1102-1, Plant Heatup to 525 Degrees F, Rev. 152, Pages 9 & 28. Condensate Pump Flow vs. Dynamic Head Curve, Rev. 4.	050
OP 1105-3, Safeguards Actuation System, Rev. 40, Page 22.	005		

Examination References Report
- Composite Listing -

Nuclear Regulatory Commission
CRO Licensing Examination
Three Mile Island Nuclear Station
February 2000

Reference Doc ID	Q #	Reference Doc ID	Q #
On-Line Maintenance Risk Management Document #107.	039	GET Radiation Worker Training Handout, Rev. 5, Page 14.	097
LP 11.2.01.211, ATP 1210-2 Loss of 25 Degrees Subcooled Margin, Rev. 11, Page 4.	030	EP 1202-9B, Loss of B DC Distribution System, Rev. 40, Page 4.	053
		OP 1105-4, Integrated Control System, Rev. 60, Page 16.	
ICS Print D553731, Feedwater Control Analog Logic, Rev. Q.	070	ICS Print D553731, Feedwater Control Analog Logic, Rev. Q.	
ICS Print D553733, Steam Generator - Feedwater Control Digital Logic, Rev. R.			
		EP 1202-9B, Loss of B DC Distribution System, Rev. 40, Page 3.	013
ICS Print D553731, Feedwater Control Analog Logic, Rev. Q.	052		
		EP 1202-8, CRD Equipment Failure, Rev. 53, Pages 3 to 8.	001
ICS Print D553731, Feedwater Control Analog Logic, Rev. Q.	066		
		EP 1202-8, CRD Equipment Failure, Rev. 53, Page 9.	018
GET Radiation Worker Training Handout, Rev. 5, Page 19.	098		
		EP 1202-8, CRD Equipment Failure, Rev. 53, Page 8.	037

Examination References Report
- Composite Listing -

Nuclear Regulatory Commission
CRO Licensing Examination
Three Mile Island Nuclear Station
February 2000

Reference Doc ID	Q #	Reference Doc ID	Q #
EP 1202-8, CRD Equipment Failure, Rev. 53, Page 3.	038	EP 1202-37, Cooldown From Outside the Control Room, Rev. 52, Page 2.	012
EP 1202-42, Total or Partial Loss of ICS/NNI Auto Power, Rev. 34, Page 3.	009	EP 1202-36, Loss of Instrument Air, Rev. 29, Pages 6 and 8.	080
EP 1202-41, Total or Partial Loss of ICS/NNI Hand Power, Rev. 30, Page 3.	015	EP 1202-36, Loss of Instrument Air, Rev. 29, Pages 2 & 10.	087
EP 1202-38, Nuclear Services River Water Failure, Rev. 37, Page 3. C-302-202, River Water System, Rev. 57.	010	EP 1202-35, Loss of Decay Heat Removal System, Rev. 33, Page 4.	100
EP 1202-38, Nuclear Services River Water Failure, Rev. 37, Page 2.	045	EP 1202-33, Tornado/High Winds, Rev. 20, Page 2.	099
EP 1202-37, Cooldown from Outside the Control Room, Rev. 52, Pages 3, 4, 8 & 11. Training Lesson Plan 11.2.01.262, Remote Shutdown, Rev. 8, Pages 23 & 24.	079	EP 1202-29, Pressurizer System Failure, Rev. 54, Pages 5 and 7.	006

Examination References Report
- Composite Listing -

Nuclear Regulatory Commission
CRO Licensing Examination
Three Mile Island Nuclear Station
February 2000

Reference Doc ID	Q #	Reference Doc ID	Q #
EP 1202-29, Pressurizer System Failure, Rev. 54, Page 11.	034	EP 1202-12, Excessive Radiation Levels, Rev. 45, Pages 9 & 13.	076
EP 1202-29, Pressurizer System Failure, Rev. 54, Page 11.	063	EP 1202-11, High Activity in Reactor Coolant, Rev. 25, Page 2.	014
EP 1202-2, Loss of Station Power, Rev. 49, Page 6.	008	ATP 1210-4, Lack of Primary to Secondary Heat Transfer, Rev. 21, Page 2. Steam Tables.	019
EP 1202-12, Excessive Radiation Levels, Rev. 45, Page 13.	033	ATP 1210-10, Abnormal Transients Rules, Guides and Graphs, Rev. 37, RCS Natural Circulation Verification Guideline 2.8, Page 11.	003
EP 1202-12, Excessive Radiation Levels, Rev. 45, Page 12. ARP MAP C-1-1, Radiation Level Hi, Rev. 72, Page 19.	032	ATP 1210-10, Abnormal Transients Rules, Guides and Graphs, Rev. 37, Page 9.	049
EP 1202-12, Excessive Radiation Levels, Rev. 45, Page 12.	059	ATP 1210-10, Abnormal Transients Rules, Guides and Graphs, Rev. 37, Page 4. Steam Tables.	025

Examination References Report
- Composite Listing -

Nuclear Regulatory Commission
CRO Licensing Examination
Three Mile Island Nuclear Station
February 2000

Reference Doc ID	Q #	Reference Doc ID	Q #
ATP 1210-10, Abnormal Transients Rules, Guides and Graphs, Rev. 37, Page 4. Steam Tables.	048	ARP MAP N-1-6, Mn Cond Vacuum Lo, Rev. 15, Pages 1 & 2.	077
ATP 1210-10, Abnormal Transients Rules, Guides and Graphs, Rev. 37, OTSG Level Rule 1.6, Pages 5 & 6.	060	ARP MAP K-1-1, Turbine Trip, Rev. 18, Page 1.	021
		ARP MAP J-1-3, OTSG A EFW Actuated, Rev. 15.	029
ATP 1210-10, Abnormal Transients Rules, Guides and Graphs, Rev 37, Page 11.	035		
		ARP MAP H-1-1, ICS Runback, Rev. 19, Page 2.	020
ATP 1210-10 Abnormal Transients Rules, Guides and Graphs, Rev. 37, OTSG Level Rule 1.6, Pages 5 & 6. ATP 1210-1, Reactor Trip, Rev. 40, Step 2.7, Page 4.	016		
		ARP MAP G-2-3, CRD Outmotion Inhibit, Rev. 6, Pages 1 & 2. ARP MAP H-1-4, Neutron X-Limit to FW, Rev. 12, Page 1.	046
ATP 1210-1, Reactor Trip, Rev. 40, Page 4. ATP 1210-10, Abnormal Transients Rules, Guides and Graphs, Rev. 37, Page 7.	044		
		ARP MAP G-1-7, PORV Open (Acoustic), Rev. 8, Pages 1 & 2. ARP LWDS-1-4, R. C. Drain Tnk. Press. Hi, Rev. 10, Page 1.	062

Examination References Report
- Composite Listing -

Nuclear Regulatory Commission
CRO Licensing Examination
Three Mile Island Nuclear Station
February 2000

Reference Doc ID	Q #	Reference Doc ID	Q #
ARP MAP G-1-1, Reactor Trip, Rev. 12, Pages 1 & 2. ARP MAP G-1-2, RPS Channel Trip, Rev. 10, Page 1. ARP MAP A-1-6, Inverter Failed, Rev. 13, Page 1.	064	ARP HVB-1-6, Air Tunnel Fire-Smoke, Rev. 7, Pages 1 & 2.	011
		AP 1067, Independent Verification Program, Rev. 28, Page 5.	088
ARP MAP G-1-1, Reactor Trip, Rev. 12, Pages 1 & 2.	085		
		AP 1029, Conduct of Operations, Rev. 71, Page 28.	092
ARP MAP C-1-1, Radiation Level Hi, Rev. 20, Page 53.	069		
		AP 1029, Conduct of Operations, Rev. 71, Page 20.	090
ARP MAP C-1-1, Radiation Level Hi, Rev. 20, Page 2 (RM-A-1).	058		
		AP 1002, Rules for Protection of Employees Working on Electrical and Mechanical Apparatus, Rev. 85, Page 9.	095
ARP MAP C-1-1, Radiation Level Hi, Rev. 20, Page 13.	028		
		AP 1002, Rules for Protection of Employees Working on Electrical and Mechanical Apparatus, Rev. 85, Page 27.	096
ARP HVB-6-9, Rx Bldg Kidney Filter Trouble (Hi Temp), Rev. 8, Page 1.	082		

Examination References Report
- Composite Listing -

Nuclear Regulatory Commission
CRO Licensing Examination
Three Mile Island Nuclear Station
February 2000

Reference Doc ID	Q #	Reference Doc ID	Q #
AP 1001A, Procedure Review and Approval, Rev. 39, Page 19.	093		
AbP 1203-43, Transfer Canal Seal Plate Gasket Failure/Level Loss, Rev. 6, Page 2.	083		
AbP 1203-21, SSCC System Failure, Rev. 14, Page 2.	086		
AbP 1203-16, Reactor Coolant Pump and Motor Malfunction, Rev. 40, Page 7.	002		
6610-PLN-4200.02, TMI Emergency Dose Calculation Manual (EDCM), Rev. 10, Page 51.	072		

Form ES-401-6

Written Exam Question Worksheet

Q # 001

Examination Outline Cross-Reference RO SRO

KA # APE 005 AK1.02 Page 4.2-6 Tier # 1

RO/SRO Importance Rating 3.1 3.8 Group # 1

Measurement Knowledge of the operational implications of quadrant power tilt applicable to operation with inoperable/stuck control rods.

Proposed Question ☑ RO ☑ SRO **Correct Answer** D

Sequence of events:
- Plant STARTUP in progress (4 RCPs operating).
- Power escalation stopped at 69% reactor power.
  - Group 7 Rod #1 mechanically stuck, 10 inches below the rest of Group 7.
  - Group 7 Absolute Group Average position indication = 55% withdrawn.
- 90 minutes later:
  - Rod #1 is unstuck, withdrawn and re-aligned with remaining Group 7 rods.
  - Power escalation to 100% is resumed at 30% per hour.

Identify the ONE (1) statement below that describes IF and WHY the above actions are procedurally ACCEPTABLE or UNACCEPTABLE in accordance with EP 1202-8, CRD Equipment Failure.

A. Actions are ACCEPTABLE; adverse power peaking will not occur - the stuck rod was re-aligned with its group within two (2) hours.

B. Actions are ACCEPTABLE; adverse power peaking will not occur - the stuck rod was re-aligned with its group while the group was less than 60% withdrawn.

C. Actions are UNACCEPTABLE; adverse power peaking could occur - the rate of power escalation was too rapid after the stuck rod was re-aligned with its group.

D. Actions are UNACCEPTABLE; adverse power peaking could occur - the stuck rod was (withdrawn) re-aligned with Group 7 with reactor power greater than 60%.

Technical Reference EP 1202-8, CRD Equipment Failure, Rev. 53, Pages 3 to 8.

Open Exam Reference

Learning Objective V.D.03.04 Given a misaligned control rod and time since misalignment determine the steps to be taken to re-align the rod and explain the bases for those actions per EP 1202-8.

Question Source ☑ New ☐ TMI Bank TMI Question #
☐ Modified TMI Bank Parent Question #

Question History ☐ Used in Last Two TMI NRC Exams Exam Date
☐ Used in Audit Exam ☐ Used in Training Program Quiz Date

Question Cognitive Level ☐ Memory or Fundamental Knowledge
☑ Comprehension or Analysis

10 CFR Part 55 Content ☑ 55.41 .8, .10 ☐ 55.43 ☑ 55.45 .3

Discriminant Validity Statements

A Plausible since EP 1202-8 actions for stuck rod allow two (2) hours to reduce reactor power below 60% (4 RCPs are operating).

B Plausible since EP 1202-8 allows asymmetric rod recovery if greater than one (1) hour - only if reactor power is less than 60%.

C Plausible since EP 1202-8 limits power escalation to 3% per hour following recovery from an asymmetric rod condition for greater than 24 hours.

D Correct answer.

Comments None.

Form ES-401-6 **Written Exam Question Worksheet** Q # 002

Examination Outline Cross-Reference RO SRO

KA # APE 015/17 AA1.02 Page 4.2-11 Tier # 1

RO/SRO Importance Rating 2.8 2.7 Group # 1

Measurement Ability to operate and/or monitor RCP oil reservoir level and alarm indicators applicable to Reactor Coolant Pump Malfunctions (Loss of RC Flow).

Proposed Question ☑ RO ☑ SRO **Correct Answer** C

Plant conditions:
- Reactor power is 100%.
- PPC Point A0961, RC-P-1A UPPER OIL POT LOW alarm actuates.

From the list below, identify the ONE (1) condition that would require the operator to secure RC-P-1A as conditions continue to degrade.

A. RCP Backstop Oil Flow Low Alarm actuates.

B. Motor Thrust Bearing temperature = 192 degrees F.

C. Motor Radial Bearing temperature = 188 degrees F.

D. Motor Stator temperature = 140 degrees C (284 degrees F).

Technical Reference AbP 1203-16, Reactor Coolant Pump and Motor Malfunction, Rev. 40, Page 7.

Open Exam Reference

Learning Objective V.C.06.03 State the immediate manual actions required for the following RCP malfunctions per AP 1203-16:
e. Lube oil emergency

Question Source ☑ New ☐ TMI Bank TMI Question #
☐ Modified TMI Bank Parent Question #

Question History ☐ Used in Last Two TMI NRC Exams Exam Date
☐ Used in Audit Exam ☐ Used in Training Program Quiz Date

Question Cognitive Level ☑ Memory or Fundamental Knowledge
☐ Comprehension or Analysis

10 CFR Part 55 Content ☑ 55.41 .7 ☐ 55.43 ☑ 55.45 .5, .6

Discriminant Validity Statements

A Plausible since this parameter is monitored for Lube Oil Emergency.

B Plausible since this parameter is monitored for trip criteria.

C Correct answer.

D Plausible since this parameter is monitored for trip criteria.

Comments None.

Form ES-401-6 **Written Exam Question Worksheet** Q # 003

Examination Outline Cross-Reference

				RO	SRO
KA #	BWE09 EK2.2	Page	4.3-13	Tier #	1
RO/SRO Importance Rating	4	4		Group #	1

Measurement Knowledge of the interrelations between natural circulation cooldown and the facility's heat removal systems, including primary coolant, emergency coolant, the decay heat removal systems, and relations between the proper operation of these systems to the operation of the facility.

Proposed Question ☑ RO ☑ SRO **Correct Answer** C

Sequence of events:
- Reactor power 100%.
- Loss of station power.
- Emergency systems respond as designed, except EF-P-1 TRIPS.
- Main Condenser vacuum is broken.
- Turbine Gland Sealing Steam is ISOLATED.
- RCS Subcooled margin has been maintained.

Identify the ONE (1) set of secondary plant conditions below that, if sustained, will result in LOSS OF RCS NATURAL CIRCULATION with the plant conditions described above.

A. OTSG levels at 15% on Operating Range and slowly increasing;
EFW flows throttled to 100 gpm to each OTSG;
Atmospheric dump valves open 20% with OTSG pressures slowly decreasing.

B. OTSG levels at 15% on Operating Range and slowly increasing;
EFW flows throttled to 250 gpm to each OTSG;
Atmospheric dump valves closed with OTSG pressures slowly decreasing.

C. OTSG levels maintained at 55% on Operating Range;
EFW flows throttled to 0 gpm to each OTSG;
Atmospheric dump valves closed with OTSG pressures constant.

D. OTSG levels maintained at 55% on Operating Range;
EFW flows throttled to 100 gpm to each OTSG;
Atmospheric dump valves 20% open with OTSG pressures constant.

Technical Reference ATP 1210-10, Abnormal Transients Rules, Guides and Graphs, Rev. 37, RCS Natural Circulation Verification Guideline 2.8, Page 11.

Open Exam Reference

Learning Objective III.C.07.05 Explain how Natural Circulation flow is verified IAW ATP 1210-10.

Question Source ☑ New ☐ TMI Bank TMI Question #
☐ Modified TMI Bank Parent Question #

Question History ☐ Used in Last Two TMI NRC Exams Exam Date
☐ Used in Audit Exam ☐ Used in Training Program Quiz Date

Question Cognitive Level ☐ Memory or Fundamental Knowledge
☑ Comprehension or Analysis

10 CFR Part 55 Content ☑ 55.41 .7 ☐ 55.43 ☑ 55.45 .7

Discriminant Validity Statements

A Plausible because OTSG levels are low and EFW is throttled, but heat is being removed by feeding and steaming.

B Plausible because OTSGs are not being steamed, but EFW spray effectiveness is removing heat.

C Correct answer - these conditions do NOT promote natural circulation because no heat is being removed from OTSGs.

D Plausible because there is no EFW flow, but heat is being removed by steaming with adequate levels in OTSGs.

Comments None.

Form ES-401-6 **Written Exam Question Worksheet** Q # 004

Examination Outline Cross-Reference RO SRO

KA # APE 024 AA1.26 Page 4.2-15 Tier # 1

RO/SRO Importance Rating 3.3 3.3 Group # 1

Measurement Ability to operate and/or monitor the boric acid storage tank as applied to emergency boration.

Proposed Question ☑ RO ☑ SRO **Correct Answer** D

RCS Emergency boration has been initiated from the Boric Acid Mix Tank (BAMT) via MU-V-51. From the list below, identify the ONE (1) indication that can be used to satisfy the PROCEDURAL REQUIREMENT to verify flow from the BAMT.

A. CA P-1A/1B Control Room breaker RED LIGHTS ENERGIZED.

B. MU System Batch Controller TOTALIZER INCREASING.

C. CA-P-1A/1B STROKE COUNTERS OPERATING.

D. Indication of BAMT LEVEL DECREASING.

Technical Reference OP 1103-4, Soluble Poison Concentration Control, Rev. 50, Page 21.

Open Exam Reference

Learning Objective IV.A.09.25 Describe the methods of RCS emergency boration.

Question Source ☑ New ☐ TMI Bank TMI Question #

☐ Modified TMI Bank Parent Question #

Question History ☐ Used in Last Two TMI NRC Exams Exam Date

☐ Used in Audit Exam ☐ Used in Training Program Quiz Date

Question Cognitive Level ☐ Memory or Fundamental Knowledge

☑ Comprehension or Analysis

10 CFR Part 55 Content ☐ 55.41 .7 ☐ 55.43 ☑ 55.45 .5, .6

Discriminant Validity Statements

A Plausible distracter since this indicates that CA-P-1A/B is operating, but is not positive indication of flow.

B Plausible distracter if the emergency boration flowpath is misunderstood - MU-V-51 bypasses the Batch Controller.

C Plausible distracter since this indicates that CA-P-1A/B is operating, but is not positive indication of flow.

D Correct answer.

Comments None.

Form ES-401-6 **Written Exam Question Worksheet** Q # 005

Examination Outline Cross-Reference RO SRO

KA # APE 026 AA2.02 Page 4.2-19 Tier # 1

RO/SRO Importance Rating 2.9 3.5 Group # 1

Measurement Ability to determine and interpret the cause of a loss of CCW as it applies to the Loss of Component Cooling Water: ID cause for loss of ICCW/NSCCW system flow.

Proposed Question ☑ RO ☑ SRO **Correct Answer** D

Plant conditions:
- Reactor power initially is 100%.
- Large Break LOCA occurs at RCP-1C suction.

Based on expected plant response, identify the ONE (1) actuation signal that would result in ISOLATION of NSCC to the Reactor Building.

A. Reactor Trip Isolation.

B. 1600 psig RCS Pressure ESAS.

C. 4 psig RB Pressure ESAS.

D. 30 psig RB Pressure ESAS.

Technical Reference OP 1105-3, Safeguards Actuation System, Rev. 40, Page 22.

Open Exam Reference

Learning Objective IV.B.05.10 Identify/describe the effects of an ESAS actuation (1600#, 4#, 30#) on the NSCCW system, with or without an undervoltage condition on the ES buses.

Question Source ☑ New ☐ TMI Bank TMI Question #
☐ Modified TMI Bank Parent Question #

Question History ☐ Used in Last Two TMI NRC Exams Exam Date
☐ Used in Audit Exam ☐ Used in Training Program Quiz Date

Question Cognitive Level ☑ Memory or Fundamental Knowledge
☐ Comprehension or Analysis

10 CFR Part 55 Content ☐ 55.41 ☐ 55.43 ☑ 55.45 .13

Discriminant Validity Statements

A Plausible misconception on Reactor Trip Isolation effect on NSCC.

B Plausible misconception for RCS 1600 psig ES actuation effect on NSCC.

C Plausible misconception for RB 4 psig ES actuation effect on NSCC.

D Correct answer.

Comments KA catalog does not address 10 CFR 55.41 for this measurement. GPU feels 10 CFR 55.41 is applicable to this KA Catalog item.

Form ES-401-6

Written Exam Question Worksheet

Q # 006

Examination Outline Cross-Reference

					RO	SRO
KA #	APE 027 AK2.03	Page	4.2-20	Tier #	1	
RO/SRO Importance Rating	2.6	2.8		Group #	1	

Measurement Knowledge of the interrelations between the Pressurizer Pressure Control Malfunctions and the controllers and positioners: Predict/monitor/control effects of Pressurizer pressure control malfunction.

Proposed Question ☑ RO ☑ SRO **Correct Answer** B

Sequence of events:
- Initial reactor power = 90%.
- FW-P-1A trips and an automatic ICS runback is in progress.
- At 2225 psig RCS pressure (still increasing), the selected RCS pressure transmitter fails low (SASS DOES NOT ACTUATE).
- NO manual operations have been performed.

From the list below, identify the ONE (1) group of automatic actions (LISTED IN CHRONOLOGICAL ORDER) if this plant situation continues and the operator does NOT intervene with manual actions.

A. RC-V-1 CLOSES;
Pressurizer heaters ENERGIZE;
Reactor trips on LOW RCS pressure.

B. RC-V-1 CLOSES;
Pressurizer heaters ENERGIZE;
Reactor trips on HIGH RCS pressure.

C. RC-V-1 remains OPEN;
Pressurizer heaters DE-ENERGIZE;
Reactor trips on HIGH RCS pressure.

D. RC-V-1 remains OPEN;
Pressurizer heaters DE-ENERGIZE;
Reactor trips on LOW RCS pressure.

Technical Reference EP 1202-29, Pressurizer System Failure, Rev. 54, Pages 5 and 7.

Open Exam Reference

Learning Objective V.D.11.03 Given a list of symptoms, identify the event, determine what Immediate Automatic Actions will occur and what Immediate Manual Actions are required IAW EP 1202-29.

Question Source ☑ New ☐ TMI Bank TMI Question #
☐ Modified TMI Bank Parent Question #

Question History ☐ Used in Last Two TMI NRC Exams Exam Date
☐ Used in Audit Exam ☐ Used in Training Program Quiz Date

Question Cognitive Level ☐ Memory or Fundamental Knowledge
☑ Comprehension or Analysis

10 CFR Part 55 Content ☑ 55.41 .7 ☐ 55.43 ☑ 55.45 .7

Discriminant Validity Statements

A Plausible because all actions listed occur in response to an actual decrease in RCS pressure.

B Correct answer. The first two actions result in the third action.

C Plausible because all actions listed occur in response to an actual increase in RCS pressure.

D Plausible because first two actions occur in response to an actual increase in RCS pressure.

Comments None.

Form ES-401-6 **Written Exam Question Worksheet** Q # 007

Examination Outline Cross-Reference RO SRO

KA # APE 040 AK2.01 Page 4.2-31 Tier # 1

RO/SRO Importance Rating 4.1 4.4 Group # 1

Measurement Knowledge of the operational implications of reactivity effects of cooldown as applicable to Steam Line Rupture.

Proposed Question ☑ RO ☑ SRO **Correct Answer** A

Plant conditions:
- Hot Shutdown.
- 650 EFPD.

From the list below, identify the ONE (1) statement that correctly describes the BASIS for the difference between Hot Shutdown Boron Concentration requirements for normal OTSG Level (25 inches) and FLOODED NOZZLE conditions.

A. Offset reactivity effects of additional RCS Cooldown in the event of a Steam Line Rupture.

B. Boron differential reactivity worth (delta-K/K per 100 PPM) decreases as the concentration is increased.

C. Additional mass and stored energy in the OTSGs (secondary) will decrease RCS cooldown rate in the event of a LOCA into the RB.

D. Additional mass and stored energy in the OTSGs (secondary) will decrease tube leak rate in the event of an OTSG Tube Rupture.

Technical Reference OPM Section N-08, Safety Analysis, Rev. 3, Pages 33 and 34.

Open Exam Reference

Learning Objective V.B.05.05 Explain the purpose of raising RCS boron concentration to the "Flooded Nozzle" value prior to commencing a plant cooldown.

Question Source ☑ New ☐ TMI Bank TMI Question #
☐ Modified TMI Bank Parent Question #

Question History ☐ Used in Last Two TMI NRC Exams Exam Date
☐ Used in Audit Exam ☐ Used in Training Program Quiz Date

Question Cognitive Level ☐ Memory or Fundamental Knowledge
☑ Comprehension or Analysis

10 CFR Part 55 Content ☑ 55.41 .8, .10 ☐ 55.43 ☑ 55.45 .3

Discriminant Validity Statements

A Correct answer.

B Plausible distracter since boron differential reactivity worth decreases as boron concentration increases. Stem does not state whether flooded boron concentration is higher or lower than normal low level values.

C Plausible misconception since reverse heat transfer from (filled) OTSGs would reduce the RCS cooldown rate during a LOCA, thus reducing the rate of reactivity change due to the temperature reduction. Stem does not state whether flooded nozzle boration concentration is higher or lower.

D Plausible misconception regarding elevation effects of OTSG tube leaks.

Comments None.

Form ES-401-6

Written Exam Question Worksheet

Q # 008

Examination Outline Cross-Reference

RO SRO

KA # APE 056 AK1.04 Page 4.2-37 Tier # 1

RO/SRO Importance Rating 3.1 3.2 Group # 1

Measurement Knowledge of the operational implications of the definition of saturation conditions, implications for the systems as applicable to Loss of Offsite Power:

Proposed Question ☑ RO ☑ SRO **Correct Answer** B

Plant conditions:
- A loss of station power has occurred.
- Only the 1D 4KV bus has been re-energized.
- Pressurizer heaters have NOT been energized.
- Pressurizer level is being maintained at 100 inches.
- OTSG levels are being maintained at 50% operating range.
- RCS natural circulation has been obtained and verified.
- RCS Subcooled margin is 50 degrees F.
- Core cooldown rate is 5 degrees F/hour.

From the list below, identify the ONE (1) statement that describes expected RCS Subcooled margin response.

A. Increase as core temperatures decrease.

B. Decrease as Pressurizer temperature decreases.

C. Remain fairly constant with constant Pressurizer level.

D. Remain fairly constant with constant core cooldown rate.

Technical Reference EP 1202-2, Loss of Station Power, Rev. 49, Page 6.

Open Exam Reference

Learning Objective IV.A.01.06 Describe how RCS pressurizer pressure is maintained to include:
a. Heaters and their setpoints.

Question Source ☑ New ☐ TMI Bank TMI Question #
☐ Modified TMI Bank Parent Question #

Question History ☐ Used in Last Two TMI NRC Exams Exam Date
☐ Used in Audit Exam ☐ Used in Training Program Quiz Date

Question Cognitive Level ☐ Memory or Fundamental Knowledge
☑ Comprehension or Analysis

10 CFR Part 55 Content ☑ 55.41 .8, .10 ☐ 55.43 ☑ 55.45 .3

Discriminant Validity Statements

A Plausible because with constant pressure, SCM increases as temperature decreases.

B Correct answer.

C Plausible if Pressurizer heaters were available to maintain Pressurizer temperature.

D Plausible if Pressurizer heaters were available to maintain Pressurizer temperature.

Comments None.

Form ES-401-6

Written Exam Question Worksheet

Q # 009

Examination Outline Cross-Reference

					RO	SRO
KA #	APE 057 AK3.01	Page	4.2-41	Tier #	1	
RO/SRO Importance Rating	4.1	4.4		Group #	1	

Measurement Knowledge of the reasons for actions contained in EOP for loss of vital AC electrical instrument bus as applicable to the Loss of Vital AC Instrument Bus.

Proposed Question ☑ RO ☑ SRO **Correct Answer** A

Initial plant conditions:
- Reactor power is 100%.
- ICS in FULL AUTOMATIC.

Event:
- Total loss of ICS/NNI AUTO POWER due to loss of 120V AC Panel ATA.

From the list below, identify the ONE (1) means of OTSG/steam pressure control that would NOT be available to the operator if the plant remains on-line in this situation.

A. MAIN TURBINE CONTROL VALVES, using the Main Turbine ICS Hand/Auto station.

B. MAIN TURBINE CONTROL VALVES, using the DTCS Operator Work Station (OWS).

C. TURBINE BYPASS VALVES, using their ICS Hand/Auto stations.

D. ATMOSPHERIC DUMP VALVES, using the Backup Manual Loaders.

Technical Reference EP 1202-42, Total or Partial Loss of ICS/NNI Auto Power, Rev. 34, Page 3.

Open Exam Reference

Learning Objective V.D.22.04 Given a list of symptoms, identify the event, determine what immediate automatic actions will occur and what immediate manual actions are required IAW EP 1202-42.

Question Source ☑ New ☐ TMI Bank TMI Question #
☐ Modified TMI Bank Parent Question #

Question History ☐ Used in Last Two TMI NRC Exams Exam Date
☐ Used in Audit Exam ☐ Used in Training Program Quiz Date

Question Cognitive Level ☑ Memory or Fundamental Knowledge
☐ Comprehension or Analysis

10 CFR Part 55 Content ☑ 55.41 .5, .10 ☐ 55.43 ☑ 55.45 .13

Discriminant Validity Statements

A Correct answer.

B Plausible since this means of control is available.

C Plausible since this means of control is available.

D Plausible since this means of control is available.

Comments None.

Form ES-401-6

Written Exam Question Worksheet

Q # 010

Examination Outline Cross-Reference

RO SRO

KA # APE 062 AK3.03 Page 4.2-49 Tier # 1

RO/SRO Importance Rating 4 4.2 Group # 1

Measurement Knowledge of the reasons for guidance contained in EOP for Loss of Nuclear Service Water: actions/pressure control during cross tie with SRW system.

Proposed Question ☑ RO ☑ SRO **Correct Answer** A

Plant conditions:
- Reactor power is 100%.
- Loss of the 1R 480V bus results in a loss of all three Nuclear River Water pumps.
- Secondary River Water system is cross-tied with the Nuclear River Water system per EP 1202-38.
- SR-P-1B and SR-P-1C are operating.

Under these conditions, EP 1202-38 requires that SR-V-2 (River Water Supply Isolation) be throttled to maintain Secondary River pump discharge header pressure greater than 21 psig as read on SR-PI-134 (Console Left).

From the list below, identify the ONE (1) reason for throttling SR-V-2 under these conditions.

A. To prevent pump runout of the Secondary River pumps.

B. To limit Secondary River flow to the less critical secondary heat loads.

C. To limit Secondary River flow to the less critical Nuclear River system heat loads.

D. To increase Secondary River flow to the more critical Nuclear River System components.

Technical Reference EP 1202-38, Nuclear Services River Water Failure, Rev. 37, Page 3.
C-302-202, River Water System, Rev. 57.

Open Exam Reference

Learning Objective IV.D.22.09 Describe how secondary service heat exchanger river flow is manually adjusted, and explain what conditions would require manual flow adjustment.

Question Source ☑ New ☐ TMI Bank TMI Question #
☐ Modified TMI Bank Parent Question #

Question History ☐ Used in Last Two TMI NRC Exams Exam Date
☐ Used in Audit Exam ☐ Used in Training Program Quiz Date

Question Cognitive Level ☑ Memory or Fundamental Knowledge
☐ Comprehension or Analysis

10 CFR Part 55 Content ☑ 55.41 .4, .8 ☐ 55.43 ☑ 55.45 .7

Discriminant Validity Statements

A Correct answer.

B Plausible because SR-V-2 does isolate the SR heat exchangers.

C Plausible due to misconception that SR-V-2 isolates NR system also.

D Plausible because SR-V-2 does not isolate the SR heat exchangers.

Comments None.

Form ES-401-6

Written Exam Question Worksheet

Q # 011

Examination Outline Cross-Reference

					RO	SRO
KA #	APE 067 AA2.05	Page	4.2-53	Tier #	1	
RO/SRO Importance Rating	3.2	3.6		Group #	1	

Measurement Ability to determine and interpret ventilation alignment necessary to secure affected area as applicable to a Plant Fire on Site: actions to secure ventilation to area affected by a fire.

Proposed Question ☑ RO ☑ SRO **Correct Answer** C

Plant conditions:
- Refueling Shutdown mode with core reload in progress.
- Fire occurs in a trailer just south of the Unit-1 Air Supply Tunnel.
- EP 1202-31, Fire, has been implemented and the Fire Brigade is on the scene.
- Smoke enters the Unit-1 Air Supply Tunnel and causes numerous alarms on H&V panel including:
  - HVB-1-6, AIR SUPPLY TUNNEL FIRE-SMOKE

From the list below, identify the ONE (1) fan that, if operating, should have tripped based on these conditions.

A. Control Building Second Floor Booster Fan, AH-E-95A.

B. Control Building Emergency Recirculation Fan, AH-E-18A.

C. Auxiliary and Fuel Handling Building Supply Fan, AH-E-10.

D. Control Building Supply Fan, AH-E-17A.

Technical Reference ARP HVB-1-6, Air Tunnel Fire-Smoke, Rev. 7, Pages 1 & 2.

Open Exam Reference

Learning Objective V.C.12.04 Given a list of symptoms, identify the event, determine what immediate Automatic actions will occur IAW AP 1203-34.

Question Source ☑ New ☐ TMI Bank TMI Question #
☐ Modified TMI Bank Parent Question #

Question History ☐ Used in Last Two TMI NRC Exams Exam Date
☐ Used in Audit Exam ☐ Used in Training Program Quiz Date

Question Cognitive Level ☑ Memory or Fundamental Knowledge
☐ Comprehension or Analysis

10 CFR Part 55 Content ☐ 55.41 ☑ 55.43 .5 ☑ 55.45 .13

Discriminant Validity Statements

A Plausible because of the location of the fan.

B Plausible because emergency ventilation supply to control building.

C Correct answer.

D Plausible since these are the normal supply to control building.

Comments None.

Form ES-401-6

Written Exam Question Worksheet

Q # 012

Examination Outline Cross-Reference

					RO	SRO
KA #	APE 068 AA1.23	Page	4.2-55	Tier #	1	
RO/SRO Importance Rating	4.3	4.4		Group #	1	

Measurement Ability to operate and/or monitor manual trip of reactor and turbine as applicable to the Control Room Evacuation.

Proposed Question ☑ RO ☑ SRO **Correct Answer** D

Plant conditions:
- Reactor power is 100%.
- FIRE IN THE CONTROL ROOM requires rapid, immediate evacuation.

Due to degrading Control Room conditions, time is not available to complete ALL Immediate Actions of ATP 1210-1.

From the list below, identify the ONE (1) statement that describes the action(s) procedurally REQUIRED to be completed PRIOR TO LEAVING THE CONTROL ROOM, in accordance with EP 1202-37, Cooldown Outside the Control Room.

A. Start a second Makeup Pump AND Open MU-V-217.

B. Verify Safety System Status.

C. Verify Subcooling Margin exists.

D. Manually trip the Turbine.

Technical Reference EP 1202-37, Cooldown From Outside the Control Room, Rev. 52, Page 2.

Open Exam Reference

Learning Objective V.D.18.02 State and explain the immediate manual actions required for a control room evacuation per EP 1202-37, Cooldown from Outside the Control Room.

Question Source ☑ New ☐ TMI Bank TMI Question #
☐ Modified TMI Bank Parent Question #

Question History ☐ Used in Last Two TMI NRC Exams Exam Date
☐ Used in Audit Exam ☐ Used in Training Program Quiz Date

Question Cognitive Level ☑ Memory or Fundamental Knowledge
☐ Comprehension or Analysis

10 CFR Part 55 Content ☑ 55.41 .7 ☐ 55.43 ☑ 55.45 .5, .6

Discriminant Validity Statements

A Plausible distracter since this is an Immediate Action contained in 1210-1.

B Plausible distracter since this is an Immediate Action contained in 1210-1.

C Plausible distracter since this is an Immediate Action contained in 1210-1.

D Correct answer.

Comments None.

Form ES-401-6

Written Exam Question Worksheet

Q # 013

Examination Outline Cross-Reference

RO SRO

KA # 2.2.2 Page 2-5 Tier # 1

RO/SRO Importance Rating 4 Group # 1

Measurement Manipulation of controls during inadequate core cooling. Ability to manipulate the console controls as required to operate the facility between shutdown and designated power levels.

Proposed Question ☑ RO ☑ SRO **Correct Answer** D

Initial plant conditions:
- Reactor power was 100%.

Sequence of events:
- Loss of entire 1B 125-250 Volt DC Electrical Distribution System.
- Manual Reactor Trip due to Main Feedwater control problems.
- Loss of RCS Subcooled Margin.

From the list below, identify the ONE (1) statement that describes how to secure the RCPs under these conditions.

A. Trip ALL 4 RCPs using their associated extension controls (4) on Console Center.

B. Trip RC-P-1A and RC-P-1C using extension controls on Console Center.
Stop RC-P-1B and RC-P-1D by de-energizing 1B 6900 Volt Buses at Panel PR.

C. Trip RC-P-1B and RC-P-1D using extension controls on Console Center.
Stop RC-P-1A and RC-P-1C by de-energizing 1A 6900 Volt Buses at Panel PR.

D. Stop ALL 4 RCPs by de-energizing 1A and 1B 6900 Volt Buses.

Technical Reference EP 1202-9B, Loss of B DC Distribution System, Rev. 40, Page 3.

Open Exam Reference

Learning Objective V.E.02.02 State and explain the Immediate Action(s) of ATP 1210-2, Loss of 25f Subcooled Margin.

Question Source ☑ New ☐ TMI Bank TMI Question #
☐ Modified TMI Bank Parent Question #

Question History ☐ Used in Last Two TMI NRC Exams Exam Date
☐ Used in Audit Exam ☐ Used in Training Program Quiz Date

Question Cognitive Level ☐ Memory or Fundamental Knowledge
☑ Comprehension or Analysis

10 CFR Part 55 Content ☐ 55.41 ☐ 55.43 ☑ 55.45 .2

Discriminant Validity Statements

A Plausible distracter if control power scheme for RCPs is misunderstood.

B Plausible distracter if control power scheme for RCPs is misunderstood.

C Plausible distracter if control power scheme for RCPs is misunderstood.

D Correct answer.

Comments None.

Form ES-401-6

Written Exam Question Worksheet

Q # 014

Examination Outline Cross-Reference

					RO	SRO
KA #	APE 076 AK2.01	Page	4.2-58	Tier #	1	
RO/SRO Importance Rating	2.6	3		Group #	1	

Measurement Knowledge of the interrelations between the High Reactor Coolant Activity and the process radiation monitors: RMS response to high RCS activity.

Proposed Question ☑ RO ☑ SRO **Correct Answer** C

Plant conditions:
- Reactor power is 100%.
- Significant increase in RCS activity causes high alarms on RM-L-1 and RM-L-1 Low.

Identify the ONE (1) statement below that describes the expected automatic action(s) for these plant conditions.

A. MU-V-3 closes.

B. MU-V-1A AND MU-V-1B close.

C. MU-V-2A AND MU-V-2B close.

D. MU-V-2A, MU-V-2B, AND MU-V-3 close.

Technical Reference EP 1202-11, High Activity in Reactor Coolant, Rev. 25, Page 2.

Open Exam Reference

Learning Objective IV.A.09.11 State the interlocks associated with the following MU&P system components:
b. MU-V-2A/2B

Question Source ☑ New ☐ TMI Bank TMI Question #
☐ Modified TMI Bank Parent Question #

Question History ☐ Used in Last Two TMI NRC Exams Exam Date
☐ Used in Audit Exam ☐ Used in Training Program Quiz Date

Question Cognitive Level ☑ Memory or Fundamental Knowledge
☐ Comprehension or Analysis

10 CFR Part 55 Content ☑ 55.41 .7 ☐ 55.43 ☑ 55.45 .7

Discriminant Validity Statements

A Plausible because MU-V-3 closes on high letdown temperature.

B Plausible because interlock isolates RCS letdown.

C Correct answer.

D Plausible because MU-V-2A, MU-V-2B, and MU-V-3 close on high-high letdown temperature.

Comments None.

Form ES-401-6

Written Exam Question Worksheet

Q # 015

Examination Outline Cross-Reference

RO SRO

KA # EPE E02 AK3.2 Page 4.3-29 Tier # 1

RO/SRO Importance Rating 3.7 4 Group # 1

Measurement Knowledge of the reasons for normal, abnormal and emergency operating procedures associated with Loss of NNI Hand Power.

Proposed Question ☑ RO ☑ SRO **Correct Answer** A

Plant conditions:
- Reactor Power is 42%.
- ICS Stations in HAND due to ICS automatic control problems:
  FW-P-1A, FW-P-1B
  FW-V-16A, FW-V-16B
  FW-V-17A, FW-V-17B
- All other ICS controls are in AUTOMATIC.

LOSS OF ICS HANDPOWER occurs, followed immediately by a TURBINE TRIP.

Identify the ONE (1) statement below that describes procedurally required operator action(s) for this situation.

A. Trip the reactor AND trip both Main Feedwater Pumps.

B. Stabilize reactor power equal to Main Feedwater flow.

C. Transfer control of BOTH Feedwater Pumps to the Motor Speed Changers in the Control Room.

D. Transfer BOTH Main Feedwater Pumps to LOCAL SPEED CONTROL at the feedwater pump control panel.

Technical Reference EP 1202-41, Total or Partial Loss of ICS/NNI Hand Power, Rev. 30, Page 3.

Open Exam Reference

Learning Objective V.D.21.03 State the Immediate Manual Actions required for a Total or Partial Loss of ICS/NNI Hand power per EP 1202-41.

Question Source ☑ New ☐ TMI Bank TMI Question #
☐ Modified TMI Bank Parent Question #

Question History ☐ Used in Last Two TMI NRC Exams Exam Date
☐ Used in Audit Exam ☐ Used in Training Program Quiz Date

Question Cognitive Level ☐ Memory or Fundamental Knowledge
☑ Comprehension or Analysis

10 CFR Part 55 Content ☑ 55.41 .5, .10 ☐ 55.43 ☑ 55.45 .6, .13

Discriminant Validity Statements

A Correct answer.

B Plausible since this action would attempt to balance heat production with heat removal.

C Plausible since this is an alternate method of Feedwater pump control but not an immediate manual action allowed by the procedure.

D Plausible since this is an alternate method of Feedwater pump control but not an immediate manual action prescribed by the procedure.

Comments None.

Form ES-401-6

Written Exam Question Worksheet

Q # 016

Examination Outline Cross-Reference

					RO	SRO
KA #	APE 040 AK2.01	Page	4.2-31	Tier #	1	
RO/SRO Importance Rating	2.6	2.5		Group #	1	

Measurement Knowledge of the interrelations between the Steam Line Rupture and valves: valve response to Main Steam line rupture.

Proposed Question ☑ RO ☑ SRO **Correct Answer** A

Sequence of events:
- Reactor power is initially 100%.
- Steam Line Rupture in the Intermediate Building, upstream of MS-V-1C.
- HSPS actuates.
- OTSG 1B depressurizes to 40 psig.

RCS Subcooling Margin is maintained throughout this event. No operator action has been taken to isolate OTSG 1B.

Identify the ONE (1) statement below that describes the response of EF-V-30A-D under these conditions.

A. EF-V-30A and EF-V-30D remain closed in automatic;
EF-V-30B and EF-V-30C control OTSG 1B level at 25 inches in the Startup Range.

B. EF-V-30A and EF-V-30D remain closed in automatic;
EF-V-30 B and EF-V-30C control OTSG 1B level at 50% in the Operating Range.

C. EF-V-30A and EF-V-30D control OTSG 1A level at 25 inches in the Startup Range;
EF-V-30B and EF-V-30C remain closed due to HSPS (low pressure) actuation.

D. EF-V-30A and EF-V-30D control OTSG 1A level at 25 inches in the Startup Range;
EF-V-30B and EF-V-30C control OTSG 1B level at 25 inches in the Startup Range.

Technical Reference ATP 1210-10 Abnormal Transients Rules, Guides and Graphs, Rev. 37, OTSG Level Rule 1.6, Pages 5 & 6.
ATP 1210-1, Reactor Trip, Rev. 40, Step 2.7, Page 4.

Open Exam Reference

Learning Objective IV.C.05.26 Given a set of plant conditions, determine whether the EFW system has responded correctly.

Question Source ☑ New ☐ TMI Bank TMI Question #
☐ Modified TMI Bank Parent Question #

Question History ☐ Used in Last Two TMI NRC Exams Exam Date
☐ Used in Audit Exam ☐ Used in Training Program Quiz Date

Question Cognitive Level ☐ Memory or Fundamental Knowledge
☑ Comprehension or Analysis

10 CFR Part 55 Content ☑ 55.41 .7 ☐ 55.43 ☑ 55.45 .7

Discriminant Validity Statements

A Correct answer.

B Plausible distracter if actuation setpoint is misunderstood.

C Plausible distracter if actuation setpoint and HSPS isolation is misunderstood.

D Plausible distracter if HSPS isolation is misunderstood.

Comments None.

Form ES-401-6

Written Exam Question Worksheet

Q # 017

Examination Outline Cross-Reference

RO SRO

KA # APE 001 AA2.01 Page 4.2-3 Tier # 1

RO/SRO Importance Rating 4.5 4.8 Group # 2

Measurement Ability to determine and interpret the following as they apply to the Continuous Rod Withdrawal: Reactor Trip Breaker Indication.

Proposed Question ☑ RO ☑ SRO **Correct Answer** C

Events and Conditions:
- A RPS Channel is in Manual Bypass
- Plant startup in progress with reactor power at 5E-7 amps on intermediate range.
- A continuous, uncontrollable CRG-7 rod withdrawal occurs.
- A high startup rate is indicated on both source and intermediate range indicators.

The Control Room Operator MANUALLY trips the reactor.

Given the above plant conditions, identify the one method below that confirms that ALL the CRD breakers have OPENED.

A. Alarm: G-1-1 Reactor Trip.

B. Alarms: G-1-3 CRD DC Trip Brkr Open AND G-1-4 CRD AC Trip Brkr Open.

C. RPS Breaker Trip Lights on ALL 4 RPS Cabinets are energized.

D. RPS Protective Subsystem Lights on ALL 4 RPS Cabinets are energized.

Technical Reference OPM Section F-02, Reactor Protection System, Rev 8 Page 117

Open Exam Reference

Learning Objective IV.E.14.10 Given the RPS cabinet status and/or CRD Breaker status, determine if a reactor trip has occurred and/or which control rod groups have tripped.

Question Source ☑ New ☐ TMI Bank TMI Question #
☐ Modified TMI Bank Parent Question #

Question History ☐ Used in Last Two TMI NRC Exams Exam Date
☐ Used in Audit Exam ☐ Used in Training Program Quiz Date

Question Cognitive Level ☐ Memory or Fundamental Knowledge
☑ Comprehension or Analysis

10 CFR Part 55 Content ☐ 55.41 ☑ 55.43 .5 ☑ 55.45 .13

Discriminant Validity Statements

A Plausible misconception that this alarm confirm that all CRD breakers have opened.

B Plausible misconception that this alarm combination confirm that all breakers associated with each alarms have opened.

C Correct answer.

D Plausible misconception that the RPS Protective Trip lights indicate the associated breaker has opened.

Comments None.

Form ES-401-6

Written Exam Question Worksheet

Q # 018

Examination Outline Cross-Reference

RO SRO

KA # 2.4.1 Page 2-11 Tier # 1

RO/SRO Importance Rating 4.3 0 Group # 2

Measurement Knowledge of EOP entry conditions and immediate action steps: dropped control rod.

Proposed Question ☑ RO ☑ SRO **Correct Answer** C

Plant conditions:
- Reactor power is 58% on NI-5.
- 3 RCPs operating.
- All ICS HAND-AUTO stations and the Diamond Control Panel are in AUTO.
- G-2-1 CRD Pattern Asymmetrical alarm is actuated.
- Group In Limit Lamp for Safety Group 2 energized on the Diamond Control Panel.
- Asymmetric Rod Fault Lamp energized on the Diamond Control Panel.

From the list below, identify the ONE (1) statement that describes the required immediate manual action(s) for this situation.

A. Monitor Quadrant Power Tilt AND reduce power as necessary to maintain tilt limitations.

B. Verify that the highest reading NI Channel is less than 60%.

C. Manually reduce power to less than 45% using the ULD.

D. Compare API to RPI to validate rod position.

Technical Reference EP 1202-8, CRD Equipment Failure, Rev. 53, Page 9.

Open Exam Reference

Learning Objective V.D.03.03 Given a list of symptoms identify the event, determine what Immediate Automatic Actions will occur and what Immediate Manual Actions are required IAW EP 1202-8.

Question Source ☑ New ☐ TMI Bank TMI Question #
☐ Modified TMI Bank Parent Question #

Question History ☐ Used in Last Two TMI NRC Exams Exam Date
☐ Used in Audit Exam ☐ Used in Training Program Quiz Date

Question Cognitive Level ☐ Memory or Fundamental Knowledge
☑ Comprehension or Analysis

10 CFR Part 55 Content ☑ 55.41 .10 ☑ 55.43 .5 ☑ 55.45 .3, .13

Discriminant Validity Statements

A Plausible since QPT must be monitored, but it's a 2 hour action.

B Plausible since this is the maximum allowable power for 4 RCP operation.

C Correct answer.

D Plausible since this is an immediate action for an asymmetric rod.

Comments None.

Form ES-401-6

Written Exam Question Worksheet

Q # 019

Examination Outline Cross-Reference

					RO	SRO
KA #	BWE10 EA1.2	Page	4.3-19	Tier #	1	
RO/SRO Importance Rating	3.5	4		Group #	2	

Measurement Ability to operate and/or monitor operating characteristics of the facility as applicable to Post Trip Stabilization:

Proposed Question ☑ RO ☑ SRO **Correct Answer** A

Plant conditions:
- Time is ten minutes after reactor trip due to loss of both Main Feedwater Pumps.
- EF-P-2A is operating, EF-P-1 and EF-P-2B are not operating.
- T-hot is 585° F and slowly increasing.
- RCS pressure is 2300 psig and slowly increasing.
- All RCPs are operating.
- OTSG 1A level is 25 inches.
- OTSG 1B level is 0 inches.
- OTSG 1A pressure is stable at 1010 psig.
- OTSG 1B pressure is 800 psig and decreasing.
- RCS heat up rate is +75° F/Hr.

From the list below, identify the ONE (1) required action concerning operation of the Reactor Coolant Pumps.

A. Stop 1 RCP per loop.

B. Stop 3 RCPs.

C. Stop 4 RCPs.

D. Continue to operate 4 RCPs.

Technical Reference ATP 1210-4, Lack of Primary to Secondary Heat Transfer, Rev. 21, Page 2. Steam Tables.

Open Exam Reference Steam Tables.

Learning Objective V.E.04.07 Given plant conditions determine if entry is required into ATP 1210-4, Lack of Heat Transfer, and state the required immediate actions.

Question Source ☐ New ☐ TMI Bank TMI Question #
☐ Modified TMI Bank Parent Question #

Question History ☑ Used in Last Two TMI NRC Exams Exam Date 1998 TMI SRO
☐ Used in Audit Exam ☐ Used in Training Program Quiz Date

Question Cognitive Level ☐ Memory or Fundamental Knowledge
☑ Comprehension or Analysis

10 CFR Part 55 Content ☑ 55.41 .7 ☐ 55.43 ☑ 55.45 .5, .6

Discriminant Validity Statements

A Correct answer.

B Plausible distracter since this reduces heat input (by the RCPs) into the RCS during conditions of inadequate heat transfer while still maintaining forced flow through the reactor core which is the preferred method of core cooling.

C Plausible distracter since this maximizes the reduction of heat input (by the RCPs) into the RCS during conditions of inadequate heat transfer.

D Plausible distracter since this maintains maximum possible flow through the reactor core during conditions of inadequate heat transfer.

Comments 1998 TMI SRO Question 48 (QR5E04-07-Q11).

Form ES-401-6

Written Exam Question Worksheet

Q # 020

Examination Outline Cross-Reference

					RO	SRO
KA #	BWA01 AA1.1	Page	4.3-27	Tier #	1	
RO/SRO Importance Rating	3.7	3.7		Group #	2	

Measurement Ability to operate and/or monitor components, and functions of control and safety systems, including instrumentation, signals, interlocks, failure modes, and automatic and manual features as applicable to a Plant Runback: actions for ICS Runback failure.

Proposed Question ☑ RO ☑ SRO **Correct Answer** D

Sequence of events:
- Reactor power 85%.
- FW-P-1A tripped concurrent with a total loss of ICS Hand Power.
- ICS Runback failed to occur.
- The following alarms are actuated:
  - ICS IN TRACK
  - ICS HIGH LOAD LIMITED

From the list below, identify the ONE (1) statement that describes required operator action(s) for this condition.

A. Trip the Reactor/Turbine AND go to ATP 1210-1.

B. Place FW-P-1B in HAND AND increase feedwater flow.

C. Reduce the ULD setpoint to 68% (585 MWe) AND verify the plant runs back.

D. Place the SG/Rx Master in HAND AND reduce power to 68% (585 MWe).

Technical Reference ARP MAP H-1-1, ICS Runback, Rev. 19, Page 2.

Open Exam Reference

Learning Objective IV.E.27.60 Given a set of plant conditions, determine the correct ICS response and any actions that must be taken if the ICS response is incorrect.

Question Source ☑ New ☐ TMI Bank TMI Question #
☐ Modified TMI Bank Parent Question #

Question History ☐ Used in Last Two TMI NRC Exams Exam Date
☐ Used in Audit Exam ☐ Used in Training Program Quiz Date

Question Cognitive Level ☐ Memory or Fundamental Knowledge
☑ Comprehension or Analysis

10 CFR Part 55 Content ☑ 55.41 .7 ☐ 55.43 ☑ 55.45 .5, .6

Discriminant Validity Statements

A Plausible distracter since this would result in a reduction in turbine output.

B Plausible distracter since this would attempt to match reactor power and feedwater flow.

C Plausible distracter since this would normally result in a plant power reduction except when ICS Track Alarm is present.

D Correct answer.

Comments None.

Form ES-401-6

Written Exam Question Worksheet

Q # 021

Examination Outline Cross-Reference

					RO	SRO
KA #	BWA04 AA1.1	Page	4.3-33	Tier #	1	
RO/SRO Importance Rating	3.5	3.3		Group #	2	

Measurement Ability to operate and/or monitor components, and functions of control and safety systems, including instrumentation, signals, interlocks, failure modes, and automatic and manual features as applicable to a Turbine Trip: actions for turbine trip at low power.

Proposed Question ☑ RO ☑ SRO **Correct Answer** B

Plant conditions:
- Reactor power is 35%, during plant startup.
- All ICS stations in auto EXCEPT FW-P-1A.

Considering these plant conditions, from the list below identify the ONE (1) statement that describes the status of the MAIN TURBINE if the main generator breakers trip due to a generator ground fault.

A. Must be manually tripped.

B. Will immediately trip automatically.

C. Will trip automatically after a 30 second time delay.

D. Will revert to Speed Control and remain at 1800 RPM.

Technical Reference ARP MAP K-1-1, Turbine Trip, Rev. 18, Page 1.

Open Exam Reference

Learning Objective IV.E.03.08 Given a specific main turbine trip, explain its operation including control signal(s) monitored, setpoint(s) for actuation and any applicable logic to cause the actuation.

Question Source ☑ New ☐ TMI Bank TMI Question #
☐ Modified TMI Bank Parent Question #

Question History ☐ Used in Last Two TMI NRC Exams Exam Date
☐ Used in Audit Exam ☐ Used in Training Program Quiz Date

Question Cognitive Level ☐ Memory or Fundamental Knowledge
☑ Comprehension or Analysis

10 CFR Part 55 Content ☑ 55.41 41.7 ☐ 55.43 ☑ 55.45 .5, .6

Discriminant Validity Statements

A Plausible if misconception that turbine will not automatically trip on generator fault.

B Correct answer.

C Plausible because there is a 30 second delay generator trip following turbine trip.

D Plausible because this is normal turbine control.

Comments None.

Form ES-401-6 **Written Exam Question Worksheet** Q # 022

Examination Outline Cross-Reference RO SRO

KA # APE 008 AA2.30 Page 4.2-9 Tier # 1

RO/SRO Importance Rating 4.3 4.7 Group # 2

Measurement Ability to determine and interpret inadequate core cooling as applied to the Pressurizer Vapor Space Accident.

Proposed Question ☑ RO ☑ SRO **Correct Answer** B

Plant conditions:
- Reactor is tripped due to a loss of all main and emergency feedwater.
- PORV is manually opened and flow has been confirmed.
- RCS pressure is currently 2000 psig.
- All 4 RCPs have been stopped.
- RB pressure is 0.2 psig and rising at 0.05 psig per minute.
- Pressurizer level is 220 inches.
- Average of the 5 highest incore thermocouples is 640 degrees F.
- Pressurizer temperature is 616 degrees F.

Identify ONE (1) statement below that describes why current Pressurizer level indication is NOT providing accurate indication of RCS inventory conditions.

A. Mass transport through the Pressurizer PORV.

B. Voids are forming in the RCS.

C. Pressurizer temperature is low.

D. Level sensor reference leg fluid is flashing.

Technical Reference Steam Tables.

Open Exam Reference Steam Tables.

Learning Objective V.G.04.05 Explain Pressurizer level indication response when the RCS is saturated (PORV open or closed).

Question Source ☑ New ☐ TMI Bank TMI Question #
☐ Modified TMI Bank Parent Question #

Question History ☐ Used in Last Two TMI NRC Exams Exam Date
☐ Used in Audit Exam ☐ Used in Training Program Quiz Date

Question Cognitive Level ☐ Memory or Fundamental Knowledge
☑ Comprehension or Analysis

10 CFR Part 55 Content ☐ 55.41 ☑ 55.43 .5 ☑ 55.45 .13

Discriminant Validity Statements

A Plausible misconception of effects of turbulent flow through the Pressurizer.

B Correct answer - RCS is at saturated conditions.

C Plausible misconception that level indication is temperature calibrated rather than compensated.

D Plausible misconception regarding reference leg conditions and dynamics.

Comments None.

Form ES-401-6

Written Exam Question Worksheet

Q # 023

Examination Outline Cross-Reference

RO SRO

KA # EPE 009 EK2.03 Page 4.1-4 Tier # 1

RO/SRO Importance Rating 3 3.3 Group # 2

Measurement Knowledge of the interrelations between the small break LOCA and S/Gs: ID why PSHT is required for SBLOCA.

Proposed Question ☑ RO ☑ SRO **Correct Answer** D

From the list below, identify the ONE (1) statement that describes the reason for the Abnormal Transient Procedure requirement to obtain primary to secondary heat transfer even under small break LOCA conditions with core cooling provided by high pressure injection.

A. Maintain main steam supply to EF-P-1.

B. Expedite recovery of at least 25 degrees F Subcooled margin.

C. Achieve and maintain core cooldown rate greater than 100 degrees F per hour.

D. Ensure core cooling is maintained if HPI cooling flow is insufficient.

Technical Reference OS-24, ATOG Theory and Practice, Rev. 1, Page 5.

Open Exam Reference

Learning Objective V.E.11.06 Explain the assumed operator practices for each of the following items:
- Maintaining OTSGs available as heat sinks

Question Source ☑ New ☐ TMI Bank TMI Question #
☐ Modified TMI Bank Parent Question #

Question History ☐ Used in Last Two TMI NRC Exams Exam Date
☐ Used in Audit Exam ☐ Used in Training Program Quiz Date

Question Cognitive Level ☑ Memory or Fundamental Knowledge
☐ Comprehension or Analysis

10 CFR Part 55 Content ☑ 55.41 .7 ☐ 55.43 ☑ 55.45 .7

Discriminant Validity Statements

A Plausible because EF-P-1 may be required for PSHT.

B Plausible because this is desired, but is a function of RCS break size.

C Plausible because core cooldown should be maintained, but NOT greater than 100F/hour.

D Correct answer.

Comments None.

Form ES-401-6

Written Exam Question Worksheet

Q # 024

Examination Outline Cross-Reference

					RO	SRO
KA #	EPE 009 EK3.17	Page	4.1-4	Tier #	1	
RO/SRO Importance Rating	4	4.3		Group #	2	

Measurement Knowledge of the reasons for automatic isolation of containment applicable to a small break LOCA: containment isolation interlocks on SBLOCA.

Proposed Question ☑ RO ☑ SRO **Correct Answer** C

Plant conditions:
- A small break LOCA has occurred, concurrent with a makeup line break downstream of MU-V-18 inside containment.
- 1600# and 4# ESAS components have actuated, including MU-V-18 closure.

From the list below, identify the ONE (1) statement that describe the basis for MU-V-18 closure.

A. Prevent release of radioactivity from containment.

B. Prevent makeup pump runout if only one train of HPI is available.

C. Ensure sufficient HPI flow into core if only one train of HPI is available.

D. Ensure sufficient NPSH for makeup pumps taking suction from BWST.

Technical Reference TMI-1 FSAR, Chapter 6, Engineered Safeguards, Page 6.1-12 (34), Update-14 dated 4/98.

Open Exam Reference

Learning Objective IV.A.09.36 Given a specific set of conditions, determine if any Makeup and Purification System interlocks are in effect and determine expected system response.

Question Source ☑ New ☐ TMI Bank TMI Question #
☐ Modified TMI Bank Parent Question #

Question History ☐ Used in Last Two TMI NRC Exams Exam Date
☐ Used in Audit Exam ☐ Used in Training Program Quiz Date

Question Cognitive Level ☑ Memory or Fundamental Knowledge
☐ Comprehension or Analysis

10 CFR Part 55 Content ☑ 55.41 .5, .10 ☐ 55.43 ☑ 55.45 .6, .13

Discriminant Validity Statements

A Plausible because other containment isolation valves close to prevent release of activity.

B Plausible because of high flow concern if a makeup line break occurred.

C Correct answer.

D Plausible because of high flow concern if a makeup line break occurred, but makeup pumps take suction from BWST during ESAS operation.

Comments None.

Form ES-401-6

Written Exam Question Worksheet

Q # 025

Examination Outline Cross-Reference

RO SRO

KA # EPE 011 EA2.11 Page 4.1-8 Tier # 1

RO/SRO Importance Rating 3.9 4.3 Group # 2

Measurement Ability to determine or interpret conditions for throttling or stopping HPI applicable to a large break LOCA: ID requirement to throttle HPI flow.

Proposed Question ☑ RO ☑ SRO **Correct Answer** A

Plant conditions:
- Large break LOCA.
- Following ES actuation, DH-P-1A tripped and could not be restarted.
- RB pressure is now 18 psig, decreasing from peak of 35 psig.
- RCS pressure indication is 100 psig, slowly decreasing.
- Incore thermocouples indicate 345 degrees, slowly decreasing.
- 2 HPI pumps are delivering COMBINED FLOW of 1100 gpm.
- DH-P-1B is delivering 500 gpm FLOW TO EACH LPI LOOP.

Identify the ONE (1) ATOG rule below that requires (or permits) HPI THROTTLING with these conditions.

A. HPI MUST be throttled to prevent pump runout.

B. HPI MAY be throttled for subcooling margin concerns.

C. HPI MUST be throttled to prevent exceeding Reactor Vessel P-T limits.

D. HPI MAY be throttled because LPI flow is greater than ATOG minimum requirements.

Technical Reference ATP 1210-10, Abnormal Transients Rules, Guides and Graphs, Rev. 37, Page 4. Steam Tables.

Open Exam Reference Steam Tables.

Learning Objective V.E.10.08 Given plant condition/status determine what "Rules" of ATP 1210-10 Abnormal Transient Rules, Guides and Graphs, apply and what actions are required to be taken.

Question Source ☑ New ☐ TMI Bank TMI Question #
☐ Modified TMI Bank Parent Question #

Question History ☐ Used in Last Two TMI NRC Exams Exam Date
☐ Used in Audit Exam ☐ Used in Training Program Quiz Date

Question Cognitive Level ☐ Memory or Fundamental Knowledge
☑ Comprehension or Analysis

10 CFR Part 55 Content ☐ 55.41 ☑ 55.43 .5 ☑ 55.45 .13

Discriminant Validity Statements

A Correct answer.

B Plausible distracter since ATOG criteria considers subcooling margin.

C Plausible distracter since this is another ATOG HPI throttling criteria.

D Plausible misconception that LPI minimum flow requirement is 1000 gpm total rather than for each of two loops.

Comments None.

Form ES-401-6

Written Exam Question Worksheet

Q # 026

Examination Outline Cross-Reference

					RO	SRO
KA #	APE 022 AA1.01	Page	4.2-13	Tier #	1	
RO/SRO Importance Rating	3.4	3.3		Group #	2	

Measurement Ability to operate and/or monitor CVCS letdown and charging during loss of Reactor Coolant Makeup: operation of letdown/charging on loss of Makeup Pumps MU-P-1A/1B.

Proposed Question ☑ RO ☑ SRO **Correct Answer** A

Sequence of events:
- Reactor trip from 100% power.
- LOSS OF STATION POWER.
- EG-Y-1A and EG-Y-1B loaded onto their respective 4160V buses.
- MU-P-1A was started during performance of ATP 1210-1.
- MU-P-1A and MU-P-1C are ES selected.
- EG-Y-1A tripped 30 seconds after MU-P-1A manual start.

Under these conditions, from the list below identify the ONE (1) statement that describes MU-P-1A breaker status light indication on Console Center.

A. MU-P-1A breaker RED light energized.

B. MU-P-1A breaker GREEN light energized.

C. MU-P-1A breaker RED AND AMBER lights energized.

D. MU-P-1A breaker GREEN AND AMBER lights energized.

Technical Reference SS-208-213, Rev. 6.
SS-208-216, Rev. 9.

Open Exam Reference

Learning Objective IV.E.24.09 Describe or compare the sequence of events that take place given the following conditions:
a. ESAS signal followed by an undervoltage condition
d. Loss of one or both diesels.
Include in your description or comparison the effects on:
a. Block loading, diesel generator operation, ES and non ES equipment response, 27/86 lockout relays, auto transfer of ICES valves and DC bus 1M.

Question Source ☑ New ☐ TMI Bank TMI Question #
☐ Modified TMI Bank Parent Question #

Question History ☐ Used in Last Two TMI NRC Exams Exam Date
☐ Used in Audit Exam ☐ Used in Training Program Quiz Date

Question Cognitive Level ☐ Memory or Fundamental Knowledge
☑ Comprehension or Analysis

10 CFR Part 55 Content ☑ 55.41 .7 ☐ 55.43 ☑ 55.45 .5, .6

Discriminant Validity Statements

A Correct answer.

B Plausible due to misconception of operation of breaker indicating lights.

C Plausible due to misconception of operation of breaker indicating lights.

D Plausible due to misconception of operation of breaker indicating lights.

Comments None.

Form ES-401-6

Written Exam Question Worksheet

Q # 027

Examination Outline Cross-Reference

					RO	SRO
KA #	APE 025 AK3.02	Page	4.2-16	Tier #	1	
RO/SRO Importance Rating	3.3	3.7		Group #	2	

Measurement Knowledge of the reasons for isolation of RHR low pressure piping prior to pressure increase above specified level as applied to the Loss of Residual Heat Removal System: reason for DH-V-1, DH-V-2 400# automatic closure interlocks.

Proposed Question ☑ RO ☑ SRO **Correct Answer** D

From the list below, identify the ONE (1) statement that describes the basis for the RCS 400 psig interlock for valves DH-V-1 and DH-V-2.

A. Ensures that the discharge pressure of the Decay Heat pumps does not violate RV-PT concerns.

B. Ensures that the operating temperatures of the Decay Heat system falls within design basis.

C. Ensures that the RCS fluid void fraction is within acceptable limits to prevent vortexing.

D. Ensures that the Decay Heat Pump suction piping is protected from overpressure.

Technical Reference OPM Section B-06, Decay Heat Removal System, Rev. 16, Page 6.

Open Exam Reference

Learning Objective IV.A.11.06 Describe how the Decay Heat Removal system is protected from overpressure.

Question Source ☑ New ☐ TMI Bank TMI Question #
☐ Modified TMI Bank Parent Question #

Question History ☐ Used in Last Two TMI NRC Exams Exam Date
☐ Used in Audit Exam ☐ Used in Training Program Quiz Date

Question Cognitive Level ☑ Memory or Fundamental Knowledge
☐ Comprehension or Analysis

10 CFR Part 55 Content ☑ 55.41 .5, .10 ☐ 55.43 ☑ 55.45 .6, .13

Discriminant Validity Statements

A Plausible since operation of the DH system may be restricted by Pressure limitations.

B Plausible since there are temperature limitations associated with the DH system.

C Plausible since void fraction is a design consideration for operation.

D Correct answer.

Comments None.

Form ES-401-6 **Written Exam Question Worksheet** Q # 028

Examination Outline Cross-Reference RO SRO

KA # APE 037 AA2.12 Page 4.2-30 Tier # 1

RO/SRO Importance Rating 3.3 4.1 Group # 2

Measurement Ability to determine and interpret Flow rate of leak as applicable to Steam Generator Tube leak: analyze data to determine value of OTSG tube leak flow rate.

Proposed Question ☑ RO ☑ SRO **Correct Answer** A

Plant conditions:
- Plant cooldown in progress due to OTSG 1B tube leak.
- SS has requested leak rate calculation per ARP MAP C-1-1.
- There is NO makeup to the Makeup Tank during this time.
- Shrink/expansion coefficient for RCS volume/temperature ratio is 45 gal/degree F.

Time	1300	1310
Pzr Level	140 inches	125 inches
MU Tank Level	71 inches	68 inches
RCS Tavg (AO5066)	405 degrees F	400 degrees F

Using Page 13 (Note 1) of ARP MAP C-1-1 (supplied) and the operational data above, identify the ONE (1) value below that represents OTSG 1B leak rate.

A. 4.5 gpm.

B. 18 gpm.

C. 45 gpm.

D. 180 gpm.

Technical Reference ARP MAP C-1-1, Radiation Level Hi, Rev. 20, Page 13.

Open Exam Reference ARP MAP C-1-1, Radiation Level Hi, Rev. 20, Page 13.

Learning Objective V.B.13.06 Perform a primary to secondary "HAND" mass balance calculation IAW alarm response procedure C-1-1.

Question Source ☑ New ☐ TMI Bank TMI Question #
☐ Modified TMI Bank Parent Question #

Question History ☐ Used in Last Two TMI NRC Exams Exam Date
☐ Used in Audit Exam ☐ Used in Training Program Quiz Date

Question Cognitive Level ☐ Memory or Fundamental Knowledge
☑ Comprehension or Analysis

10 CFR Part 55 Content ☐ 55.41 ☑ 55.43 .5 ☑ 55.45 .13

Discriminant Validity Statements

A Correct answer ((15 x 12) + (3 x 30) - (5 x 45))/10 = 4.5.

B Plausible distracter if incorrect volume/temp coefficient is used.

C Plausible distracter if divide by 10 is not performed.

D Plausible distracter if incorrect volume/temp coefficient is used and divide by 10 is not used.

Comments None.

CONTROLLED COPY

T-28

GPU NUCLEAR	TMI Alarm Response Procedure	Number: MAP C
Title: **Main Annunciator Panel C**		Revision No.: **72**
Applicability/Scope: TMI Division	Responsible Office: Plant Operations Dir.	Effective Date: **09/07/99**

This document is within QA plan scope	X	Yes		No
Safety Reviews Required	X	Yes		No

TRAINING DEPT.

C-1-1 Rev. 20 09/07/99	C-1-2 Rev. 12 02/27/98	C-1-3 Rev. 10 02/27/98	C-1-4 Rev. 9 02/27/98	C-1-5 Rev. 8 02/27/98	C-1-6 Rev. 7 02/27/98	C-1-7 Rev. 9 02/27/98	C-1-8 Rev. 11 10/23/98
C-2-1 Rev. 32 02/27/98	C-2-2 Rev. 8 02/27/98	C-2-3 Rev. 10 02/27/98	C-2-4 Rev. 11 02/27/98	C-2-5 CANCELLED 11/01/91	C-2-6 CANCELLED 11/01/91	C-2-7 Rev. 9 02/27/98	C-2-8 Rev. 9 02/27/98
C-3-1 Rev. 10 02/27/98	C-3-2 Rev. 12 02/27/98	C-3-3 CANCELLED 11/01/91	C-3-4 CANCELLED 11/01/91	C-3-5 CANCELLED 11/01/91	C-3-6 CANCELLED 11/01/91	C-3-7 Rev. 7 02/27/98	C-3-8 Rev. 8 02/27/98

	Signature	Date
Originator	R E Bay	8-26-99
Procedure Owner	R E Bay	8-26-99
PRG	[illegible]	8/31/99
Approver	[illegible]	8/27/99

MANUAL ACTION REQUIRED: (Cont'd)

NOTE 1

Once a plant shutdown is initiated, any change in the PRI-SEC leakrate could be masked by the additional makeup required to compensate for the RCS cooldown (i.e., cooling Tavg down 1°F requires 95 gal. of makeup). Therefore, it may be difficult to determine if a leak that was < 10 gpm increases to > 10 gpm to the condenser which would require implementation of the E-Plan classification. Evaluation of any leakage should be compared to the E-Plan EALs. The only method available to the crew in this situation is the "hand" mass balance calculation. The person doing the mass balance must be sensitive to the correlation between the apparent leakrate and the RCS cooldown rate. In order to standardize the method to be used for performing a "hand" mass balance calculation the following guidelines should be followed:

a. The longer the time interval between collecting data points, the more reliable the leakrate estimate will be. Therefore, leakrates should not be calculated for a time interval of < 5 minutes.

b. In order to collect data points at the same time, the required plant parameters should be put on the same computer group so they can be printed out and then used in the calculation.

c. A standardized formula should be used. The following formula is the preferred one to use:

$$\frac{(\Delta P\,L\,")*(12\ gal/") + (\Delta M\,T\,L\,")*(30\ gal/") - (\Delta Tavg\ °F)*(95\ gal/°F)}{(TIME\ minutes)}$$

= _____ gal/minutes leakrate

Δ = Differential as determined by (initial value - final value)
P L = Pressurizer Level (Computer Point C4017)
M T L = Makeup Tank Level (Computer Point A0498)
Tavg = RCS Average Temperature (Computer Point A5066)

NOTE 2

The coefficient of 95 gal/°F for cooldown applies when Tavg is 579°F. To determine the coefficient for other values of Tavg refer to Figure 2 of 1210-10. Note that on Figure 2 of 1210-10, the values on the Y-Axis (- the shrink/expansion coefficient) are given in terms of GPM/°F/hr. These values must be multiplied by 60 to get the gal/°F value used in the above equation.

Form ES-401-6

Written Exam Question Worksheet

Q # 029

Examination Outline Cross-Reference

RO SRO

KA # APE 054 AA2.03 Page 4.2-36 Tier # 1

RO/SRO Importance Rating 4.1 4.2 Group # 2

Measurement Ability to determine and interpret conditions and reasons for AFW pump startup: ID conditions/reasons for EFW start following LOFW.

Proposed Question ☑ RO ☑ SRO **Correct Answer** A

Plant conditions:
- Reactor power is 40%.
- FW-P-1A is operating.
- FW-P-1B is reset at minimum speed on governor (motor speed changer).

FW-P-1A trips due to low oil pressure, followed by a turbine and reactor trip.

Assuming NO operator action, identify the ONE (1) statement below that describes the expected response for EF-P-1, EF-P-2A, and EF-P-2B.

A. Eventually start on OTSG low level.

B. Eventually start on OTSG low pressure.

C. Immediately start due to the Feedpump trip.

D. Immediately start due to the turbine and reactor trip.

Technical Reference ARP MAP J-1-3, OTSG A EFW Actuated, Rev. 15.

Open Exam Reference

Learning Objective IV.C.05.11 State the plant conditions and interlocks which cause the Emergency Feedwater system to actuate.

Question Source ☑ New ☐ TMI Bank TMI Question #
☐ Modified TMI Bank Parent Question #

Question History ☐ Used in Last Two TMI NRC Exams Exam Date
☐ Used in Audit Exam ☐ Used in Training Program Quiz Date

Question Cognitive Level ☐ Memory or Fundamental Knowledge
☑ Comprehension or Analysis

10 CFR Part 55 Content ☐ 55.41 ☑ 55.43 .5 ☑ 55.45 .13

Discriminant Validity Statements

A Correct answer.

B Plausible misconception on EFW auto start criteria vs. HSPS actuation.

C Plausible misconception the with no flow from FW-P-1B, EFW will auto start.

D Plausible misconception on EFW auto start criteria.

Comments None.

Form ES-401-6

Written Exam Question Worksheet

Q # 030

Examination Outline Cross-Reference

					RO	SRO
KA #	BWE04 EK1.2	Page	4.3-7	Tier #	1	
RO/SRO Importance Rating	4	4.2		Group #	2	

Measurement Knowledge of the operational implications of normal, abnormal and emergency operating procedures associated with (Inadequate Heat Transfer): explain actions for loss of SCM.

Proposed Question ☑ RO ☑ SRO **Correct Answer** C

From the list below, identify the ONE (1) statement that describes the basis for the procedural requirement to trip all operating Reactor Coolant Pumps under saturated coolant conditions.

A. Increase High Pressure Injection flow.

B. Protect the Reactor Coolant Pump Motor.

C. Minimize the rate of RCS mass inventory loss.

D. Prevent Reactor Coolant Pump #1 Seal damage.

Technical Reference LP 11.2.01.211, ATP 1210-2 Loss of 25 Degrees Subcooled Margin, Rev. 11, Page 4.

Open Exam Reference

Learning Objective V.E.02.02 State and explain the Immediate Actions of ATP 1210-2, Loss of 25 Degrees F Subcooled Margin.

Question Source ☐ New ☐ TMI Bank TMI Question #
☑ Modified TMI Bank Parent Question # QR5E02-02-Q01

Question History ☐ Used in Last Two TMI NRC Exams Exam Date
☐ Used in Audit Exam ☐ Used in Training Program Quiz Date

Question Cognitive Level ☑ Memory or Fundamental Knowledge
☐ Comprehension or Analysis

10 CFR Part 55 Content ☑ 55.41 .8, .10 ☐ 55.43 ☑ 55.45 .3

Discriminant Validity Statements

A Plausible distracter related to RCS pressure response when stopping all RCPs, automatic actuation of EFW, and raising OTSG levels.

B Plausible answer since motors would be operating in LOCA environment.

C Correct answer.

D Plausible misconception for this situation since RCPs are tripped if #1 Seal fails.

Comments Parent question QR5E-02-Q01 was not used on program quizzes or Audit Exams.

Form ES-401-6 **Written Exam Question Worksheet** Q # 031

Examination Outline Cross-Reference RO SRO

KA # APE 058 AK1.01 Page 4.2-43 Tier # 1

RO/SRO Importance Rating 2.8 3.1 Group # 2

Measurement Knowledge of the operational implications of battery charger equipment and instrumentation as applicable to Loss of DC Power.

Proposed Question ☑ RO ☑ SRO **Correct Answer** B

Plant conditions:
- Reactor power is 100%.
- Loss of B Train DC distribution system.
- Battery Charger 1D has been returned to service.
- Battery Charger 1B is being returned to service.

From the list below, identify the ONE (1) statement that explains why the DC output breaker on FRONT OF THE CHARGER is required to be closed BEFORE the AC input breaker.

A. Satisfy a closing interlock for the AC breaker.

B. Prevent damage to the rectifier stack and/or blowing a rectifier anode fuse.

C. Provide a reference voltage for the battery charger regulator control circuit.

D. Ensure the charger is immediately placed in service in order to minimize the loading on Battery Charger 1D.

Technical Reference OP 1107-2, Emergency Electrical System, Rev. 72, Page 20.

Open Exam Reference

Learning Objective V.G.10.03 Explain the basic function and operation of the static inverters and battery chargers during both normal and emergency (UV) operation.

Question Source ☑ New ☐ TMI Bank TMI Question #
☐ Modified TMI Bank Parent Question #

Question History ☐ Used in Last Two TMI NRC Exams Exam Date
☐ Used in Audit Exam ☐ Used in Training Program Quiz Date

Question Cognitive Level ☑ Memory or Fundamental Knowledge
☐ Comprehension or Analysis

10 CFR Part 55 Content ☑ 55.41 .8, .10 ☐ 55.43 ☑ 55.45 .3

Discriminant Validity Statements

A Plausible distracter since there is a closing interlock for the AC supply breakers to chargers 'E' and 'F' AC breakers.

B Correct answer.

C Plausible distracter since output voltage is regulated.

D Plausible distracter since the charger will be in service when the breaker is closed.

Comments None.

Form ES-401-6

Written Exam Question Worksheet

Q # 032

Examination Outline Cross-Reference

					RO	SRO
KA #	APE 060 AA2.05	Page	4.2-47	Tier #	1	
RO/SRO Importance Rating	3.7	4.2		Group #	2	

Measurement Ability to determine and interpret that the automatic safety actions have occurred as a result of a high ARM system signal: Automatic RMS actions for accidental radioactive gas release.

Proposed Question ☑ RO ☑ SRO **Correct Answer** B

Waste Gas Decay Tank relief valve, WDG-V-36, has opened due to high tank pressure. This valve is now FAILED OPEN.

From the list below, identify the ONE (1) statement that describes automatic action(s) initiated by the Radiation Monitoring system related to this accidental gaseous release.

A. Trips AH-E-14A/C (B/D).

B. Trips AH-E-10 AND AH-E-11.

C. Trips AH-E-10 ONLY.

D. Trips AH-E-11 ONLY.

Technical Reference EP 1202-12, Excessive Radiation Levels, Rev. 45, Page 12.
ARP MAP C-1-1, Radiation Level Hi, Rev. 72, Page 19.

Open Exam Reference

Learning Objective IV.E.06.02 Identify the radiation monitoring channels by letter/number designation and the system/area monitored by each channel.

Question Source ☐ New ☐ TMI Bank TMI Question #
☐ Modified TMI Bank Parent Question #

Question History ☑ Used in Last Two TMI NRC Exams Exam Date 1998 TMI SRO
☐ Used in Audit Exam ☐ Used in Training Program Quiz Date

Question Cognitive Level ☐ Memory or Fundamental Knowledge
☑ Comprehension or Analysis

10 CFR Part 55 Content ☐ 55.41 ☑ 55.43 .5 ☑ 55.45 .13

Discriminant Validity Statements

A Plausible misconception that reduction of ventilation exhaust flow will terminate or reduce gaseous radwaste releases.

B Correct answer.

C Plausible distracter since this is the supply fan for the Fuel Handling Building.

D Plausible distracter since this is the supply fan for the Auxiliary Building, where this accidental release originates.

Comments 1998 TMI SRO Exam Question 65.

Form ES-401-6

Written Exam Question Worksheet

Q # 033

Examination Outline Cross-Reference

RO SRO

KA # APE 061 AA1.01 Page 4.2-48 Tier # 1

RO/SRO Importance Rating 3.6 3.6 Group # 2

Measurement Ability to operate and/or monitor automatic actuation as applicable to the Area Radiation Monitoring (ARM) System Alarms: Automatic (RM-A-X) interlocks.

Proposed Question ☑ RO ☑ SRO **Correct Answer** A

From the list below, identify the ONE (1) set of automatic actions that will occur if RM-G-18 (RCS Sample Line Monitor) High Alarm actuates.

A. CA-V-2 AND CA-V-13 CLOSE.

B. CA-V-4A AND CA-V-5A CLOSE.

C. WDL-V-534 AND WDL-V-535 CLOSE.

D. WDL-V-303 AND WDL-V-304 CLOSE.

Technical Reference EP 1202-12, Excessive Radiation Levels, Rev. 45, Page 13.

Open Exam Reference

Learning Objective IV.E.06.04 Given an RMS channel, state the interlocks associated with a channel in the Radiation Monitoring system.

Question Source ☑ New ☐ TMI Bank TMI Question #

☐ Modified TMI Bank Parent Question #

Question History ☐ Used in Last Two TMI NRC Exams Exam Date

☐ Used in Audit Exam ☐ Used in Training Program Quiz Date

Question Cognitive Level ☑ Memory or Fundamental Knowledge

☐ Comprehension or Analysis

10 CFR Part 55 Content ☑ 55.41 .7 ☐ 55.43 ☑ 55.45 .5, .6

Discriminant Validity Statements

A Correct answer.

B Plausible since this isolates OTSG A sample lines.

C Plausible since this isolates the RB sump.

D Plausible since this isolates the RC Drain Pump.

Comments None.

Form ES-401-6

Written Exam Question Worksheet

Q # 034

Examination Outline Cross-Reference

					RO	SRO
KA #	APE 028 AA1.03	Page	4.2-23	Tier #	1	
RO/SRO Importance Rating	2.9	2.9		Group #	3	

Measurement Ability to operate and/or monitor RCP and seal water system as applicable to the Pressurizer Level Control Malfunction.

Proposed Question ☑ RO ☑ SRO **Correct Answer** C

Plant conditions:
- Reactor power is 100%.
- MU-P-1B is operating in normal makeup system alignment.
- MU-V-17 is in AUTO with makeup flow at 22 gpm.
- MU-V-32 is in HAND for maintenance with seal injection flow at 38 gpm.

The selected Pressurizer temperature transmitter suddenly fails low.

From the list below, identify the ONE (1) statement that describes makeup and seal injection flow responses to this condition, with no operator action.

A. Makeup flow to decrease and seal injection flow to increase.

B. Makeup flow to decrease, but seal injection flow will not change.

C. Makeup flow to increase and seal injection flow to decrease.

D. Makeup flow to increase, but seal injection flow will not change.

Technical Reference EP 1202-29, Pressurizer System Failure, Rev. 54, Page 11.

Open Exam Reference

Learning Objective V.D.11.01, V.D.11.03 State the Immediate Automatic Actions that occur for the following Pressurizer System Failures per EP 1202-29:
d. Malfunction in Pressurizer Level Indication or Control.
Given a list of symptoms, identify the event, determine what Immediate Automatic Actions will occur and what Immediate Manual Actions are required IAW EP 1202-29.

Question Source ☑ New ☐ TMI Bank TMI Question #
☐ Modified TMI Bank Parent Question #

Question History ☐ Used in Last Two TMI NRC Exams Exam Date
☐ Used in Audit Exam ☐ Used in Training Program Quiz Date

Question Cognitive Level ☐ Memory or Fundamental Knowledge
☑ Comprehension or Analysis

10 CFR Part 55 Content ☑ 55.41 .7 ☐ 55.43 ☑ 55.45 .5, .6

Discriminant Validity Statements

A Plausible because of misconception that PZR level will increase causing MU-V-17 to close, and seal injection flow would increase if makeup flow decreased.

B Plausible because of misconception that PZR level will increase causing MU-V-17 to close, and that seal injection flow would not change with MU-V-32 in HAND.

C Correct answer because MU-V-17 will open causing makeup flow to increase and seal injection flow to decrease with MU-V-32 in HAND.

D Plausible because MU-V-17 will open causing makeup flow to increase, and misconception that seal injection flow would not change with MU-V-32 in HAND.

Comments None.

Form ES-401-6

Written Exam Question Worksheet

Q # 035

Examination Outline Cross-Reference

RO SRO

KA # BWE13 EK1.2 Page 4.3-21 Tier # 1

RO/SRO Importance Rating 3 3.6 Group # 3

Measurement Knowledge of the operational implications of normal, abnormal and emergency operating procedures associated with (EOP Rules): 1210-10 question.

Proposed Question ☑ RO ☑ SRO **Correct Answer** B

A reactor trip from 100% power has occurred.
- All RCPs were tripped 60 minutes ago.
- Steam flow and feedwater flow have been verified.
- Incore thermocouples are tracking T-hot.

From the list below, identify the ONE (1) set of plant conditions that indicates natural circulation is occurring.

A. OTSG pressure is 700 psig, and decreasing;
RCS Cold Leg temperature is 540° F, and increasing;
RCS Hot Leg temperature is 550° F, and stable.

B. OTSG pressure is 750 psig, and stable;
RCS Cold Leg temperature is 513° F, and stable;
RCS Hot Leg temperature is 545° F, and decreasing.

C. OTSG pressure is 800 psig, and stable;
RCS Cold Leg temperature is 550° F, and decreasing;
RCS Hot Leg temperature is 570° F, and increasing.

D. OTSG pressure is 940 psig, and increasing;
RCS Cold Leg temperature is 540° F, and increasing;
RCS Hot Leg temperature is 600° F, and stable.

Technical Reference ATP 1210-10, Abnormal Transients Rules, Guides and Graphs, Rev 37, Page 11.

Open Exam Reference

Learning Objective V.E.10.01 Without the use of ATP 1210-10 Abnormal Transient Rules, Guides and Graphs, be able to recite and explain the rules and the basis of the rules contained in the procedure.

Question Source ☐ New ☐ TMI Bank TMI Question #
☐ Modified TMI Bank Parent Question #

Question History ☑ Used in Last Two TMI NRC Exams Exam Date 1998 TMI SRO
☐ Used in Audit Exam ☐ Used in Training Program Quiz Date

Question Cognitive Level ☐ Memory or Fundamental Knowledge
☑ Comprehension or Analysis

10 CFR Part 55 Content ☑ 55.41 .8, .10 ☐ 55.43 ☑ 55.45 .3

Discriminant Validity Statements

A Plausible distracter since conditions presented indicate natural circulation cooling is not occurring per ATP 1210-10 Natural Circulation Verification guidelines.

B Correct answer.

C Plausible distracter since conditions presented indicate natural circulation cooling may be starting, but do not yet meet ATP 1210-10 Natural Circulation Verification guidelines.

D Plausible distracter since conditions presented indicate natural circulation cooling has not yet been established. Loop delta-T is excessive in accordance with ATP 1210-10 Natural Circulation Verification guidelines.

Comments 1998 TMI SRO Exam Question 87.

Form ES-401-6

Written Exam Question Worksheet

Q # 036

Examination Outline Cross-Reference

RO SRO

KA # BWA05 AK1.2 Page 4.3-34 Tier # 1

RO/SRO Importance Rating 3.3 4 Group # 3

Measurement Knowledge of the operational implications of normal, abnormal and emergency operating procedures associated with Emergency Diesel Actuation.

Proposed Question ☑ RO ☑ SRO **Correct Answer** A

The procedure for restoration of ES Components following inadvertent ES actuation requires the diesels to be loaded to at least 2 MWe for at least 20 minutes if they have been run unloaded for greater than 5 minutes.

From the list below, identify the ONE (1) statement that describes the basis for this procedural requirement.

A. Reduce engine exhaust system fire hazard.

B. Repressurize the starting air system.

C. Prevent generator field damage.

D. Refill fuel oil day tank.

Technical Reference OP 1107-3, Diesel Generator, Rev. 90, Pages 7 and 25.

Open Exam Reference

Learning Objective IV.G.08.06 Given a set of diesel generator operating parameters, determine if these parameters are in the allowable bands and what action, if any, is required.

Question Source ☑ New ☐ TMI Bank TMI Question #

☐ Modified TMI Bank Parent Question #

Question History ☐ Used in Last Two TMI NRC Exams Exam Date

☐ Used in Audit Exam ☐ Used in Training Program Quiz Date

Question Cognitive Level ☑ Memory or Fundamental Knowledge

☐ Comprehension or Analysis

10 CFR Part 55 Content ☑ 55.41 .8, .10 ☐ 55.43 ☑ 55.45 .3

Discriminant Validity Statements

A Correct answer.

B Plausible misconception regarding starting air system compressor operation.

C Plausible distracter, since operation of the exciter voltage regulator at reduced rpms could result in generator field damage.

D Plausible misconception regarding diesel fuel supply system operation.

Comments None.

Form ES-401-6

Written Exam Question Worksheet

Q # 037

Examination Outline Cross-Reference

RO SRO

KA # SYSTEM 001 K4.15 Page 3.1-4 Tier # 2

RO/SRO Importance Rating 2.7 3 Group # 1

Measurement Knowledge of CRDS design feature(s) and/or interlock(s) which provide for operation of latch controls.

Proposed Question ☑ RO ☑ SRO **Correct Answer** C

Initial conditions:
- Reactor power is 100%.
- Control rod index is 293%.
- The following ICS stations are in HAND or MANUAL for CRD breaker testing:
  - SG/Rx Master, Reactor Demand, both FW Loop Masters, and Diamond.
- Diamond Control Panel is in SEQUENCE mode of operation.
- GROUP AND SINGLE ROD SELECT switches are BOTH selected to OFF.

Sequence of events:
- When the CRD breaker is tripped for testing, a rod in Group 7 drops into the core.
- Main annunciator alarms and CRD PI panel indicate an asymmetric rod condition.
- The asymmetric rod fault lamp on the Diamond panel energizes.

From the list below, identify the ONE (1) statement that describes MINIMUM required operator actions under these plant conditions in order to insert Group 7 to reduce reactor power.

A. Go to INSERT on the CRD Insert/Withdraw switch.

B. Select SEQUENCE OVERRIDE AND go to INSERT on the CRD Insert/Withdraw switch.

C. Depress the LATCH pushbutton AND go to INSERT on the CRD Insert/Withdraw switch.

D. Select GROUP 7 on Group Select switch AND go to INSERT on the CRD Insert/Withdraw switch.

Technical Reference EP 1202-8, CRD Equipment Failure, Rev. 53, Page 8.

Open Exam Reference

Learning Objective IV.E.13.24 State and explain the function/operation of the following controls on the CRD control panel:
e. Latch Pushbutton/Indicator

Question Source ☑ New ☐ TMI Bank TMI Question #
☐ Modified TMI Bank Parent Question #

Question History ☐ Used in Last Two TMI NRC Exams Exam Date
☐ Used in Audit Exam ☐ Used in Training Program Quiz Date

Question Cognitive Level ☐ Memory or Fundamental Knowledge
☑ Comprehension or Analysis

10 CFR Part 55 Content ☑ 55.41 .7 ☐ 55.43 ☑ 55.45 .7

Discriminant Validity Statements

A Plausible because this would work without a Group-7 in-limit.

B Plausible if misconception that Sequence Override mode will bypass in-limit.

C Correct answer.

D Plausible if misconception that selecting Group-7 will bypass in-limit.

Comments None.

Form ES-401-6

Written Exam Question Worksheet

Q # 038

Examination Outline Cross-Reference

					RO	SRO
KA #	SYSTEM 001 K6.11	Page	3.1-8	Tier #	2	
RO/SRO Importance Rating	3.1	3.3		Group #	1	

Measurement Knowledge of the effect of a loss or malfunction on location and operation of CRDS fault detection (trouble alarms) and reset system, including rod control annunciator: effect of CRD fault detection.

Proposed Question ☑ RO ☑ SRO **Correct Answer** B

Plant conditions:
- Reactor power is 90%.
- ICS in FULL AUTOMATIC.
- RPI is inadvertently selected to RELATIVE at the CRD position indication panel.
- STP for Control Rod Testing has been started.

Group 7 control rod insertion (using the ICS ULD toggle switch) was terminated 8% below the original position; it was discovered that Rod #1 was stuck at its original position (initially aligned with the rest of the group).

Due to a fault detection circuit malfunction, no overhead alarms actuated, and no CRD fault lights energized during Group 7 insertion. From the list below, identify the ONE (1) automatic action that SHOULD HAVE OCCURRED under these conditions.

A. ICS Asymmetric Rod RUNBACK.

B. Actuate CRD OUT-INHIBIT.

C. Actuate CRD MOTOR FAULT interlock.

D. Energize CRD SYSTEM FAULT lights.

Technical Reference EP 1202-8, CRD Equipment Failure, Rev. 53, Page 3.

Open Exam Reference

Learning Objective IV.E.13.22 Given a set of conditions associated with the CRD system, determine if one of the following conditions exists:
a. Out-Inhibit
b. Sequence Inhibit
c. Auto Inhibit

Question Source ☑ New ☐ TMI Bank TMI Question #
☐ Modified TMI Bank Parent Question #

Question History ☐ Used in Last Two TMI NRC Exams Exam Date
☐ Used in Audit Exam ☐ Used in Training Program Quiz Date

Question Cognitive Level ☐ Memory or Fundamental Knowledge
☑ Comprehension or Analysis

10 CFR Part 55 Content ☑ 55.41 .7 ☐ 55.43 ☑ 55.45 .7

Discriminant Validity Statements

A Plausible misconception regarding ICS Asymmetric Rod Runback logic.

B Correct answer - power is greater than 60% with an asymmetric rod.

C Plausible misconception regarding CRD Motor Fault detection circuit.

D Plausible misconception regarding System Fault logic circuits.

Comments None.

Form ES-401-6

Written Exam Question Worksheet

Q # 039

Examination Outline Cross-Reference

RO SRO

KA # SYSTEM 003 K2.02 Page 3.4-6 Tier # 2

RO/SRO Importance Rating 2.5 2.6 Group # 1

Measurement Knowledge of bus power supplies to CCW pumps: IC-P-1A/1B.

Proposed Question ☑ RO ☑ SRO **Correct Answer** A

Sequence of events:
- MU-P-1A is placed in service for normal makeup and seal injection.
- IC-P-1B is started and IC-P-1A is secured per the On-Line Risk Maintenance Document.
- MU-P-1B is secured for maintenance.

From the list below, identify the ONE (1) phrase that correctly completes the following statement:

IC-P-1A and IC-P-1B are shifted for this makeup pump configuration change to prevent trip of RC Pumps if _____ and the standby IC pump fails to start.

A. Loss of the 1D 4KV bus occurs.

B. Loss of the 1E 4KV bus occurs.

C. Loss of station power occurs.

D. Emergency Safeguards actuates.

Technical Reference On-Line Maintenance Risk Management Document #107.

Open Exam Reference

Learning Objective IV.A.09.22 Explain the method of shifting in-service MU Pumps.

Question Source ☑ New ☐ TMI Bank TMI Question #
☐ Modified TMI Bank Parent Question #

Question History ☐ Used in Last Two TMI NRC Exams Exam Date
☐ Used in Audit Exam ☐ Used in Training Program Quiz Date

Question Cognitive Level ☑ Memory or Fundamental Knowledge
☐ Comprehension or Analysis

10 CFR Part 55 Content ☑ 55.41 .7 ☐ 55.43 ☐ 55.45

Discriminant Validity Statements

A Correct answer.

B Plausible because IC-P-1B is powered from 1E 4KV bus.

C Plausible because loss of station power results in UV on 1D & 1E 4KV buses.

D Plausible because this could trip IC-P-1B if 1E bus undervoltage occurred.

Comments None.

Form ES-401-6

Written Exam Question Worksheet

Q # 040

Examination Outline Cross-Reference

RO SRO

KA # SYSTEM 003 A1.05 Page 3.4-8 Tier # 2

RO/SRO Importance Rating 3.4 3.5 Group # 1

Measurement Ability to predict and/or monitor changes in parameters (to prevent exceeding design limits) associated with operating the RCPs controls including RCS flow: RPS loss of RCP low flow protection.

Proposed Question ☑ RO ☑ SRO **Correct Answer** B

From the list below, identify the ONE (1) statement that describes the basis for the RPS automatic trip based on FLUX-TO PUMPS.

A. Prevent challenges to the PORV while maintaining Code Safety Valve capability.

B. Prevent the minimum core DNBR from decreasing below design limits.

C. Prevent excessive core coolant temperature in the operating range.

D. Prevent exceeding power peaking Kw/ft limits.

Technical Reference TS 2.3.1b, Page 2-7, Amendment 184.

Open Exam Reference

Learning Objective V.F.01.04 Identify the bases for the Reactor Core and Reactor Coolant system Safety Limits found in Section 2.0 of TMI-1 Tech. Specs.

Question Source ☑ New ☐ TMI Bank TMI Question #

☐ Modified TMI Bank Parent Question #

Question History ☐ Used in Last Two TMI NRC Exams Exam Date

☐ Used in Audit Exam ☐ Used in Training Program Quiz Date

Question Cognitive Level ☑ Memory or Fundamental Knowledge

☐ Comprehension or Analysis

10 CFR Part 55 Content ☑ 55.41 .5 ☐ 55.43 ☑ 55.45 .5

Discriminant Validity Statements

A Plausible since this is a RPS trip basis.

B Correct answer.

C Plausible since this is a RPS trip basis.

D Plausible since this is a RPS trip basis.

Comments Purge TS material if TSs are provided as a reference.

Form ES-401-6

Written Exam Question Worksheet

Q # 041

Examination Outline Cross-Reference

					RO	SRO
KA #	SYSTEM 004 A1.09	Page	3.2-12	Tier #	2	
RO/SRO Importance Rating	3.6	3.8		Group #	1	

Measurement Ability to predict and/or monitor changes in parameters (to prevent exceeding design limits) associated with operating the CVCS controls, including RCS pressure and temperature: MU system operations to prevent exceeding RCS P/T limit curve.

Proposed Question ☑ RO ☑ SRO **Correct Answer** A

During a plant cooldown, MU-V-16A/B/C/D are CLOSED and the breakers tagged OPEN prior to cooling down below 332 degrees F. Identify the ONE (1) statement below that describes the basis for this step.

A. Prevent potential severe over pressurization of the RCS.

B. Prevent makeup pump runout at lower RCS pressures.

C. Prevent challenging the PORV when NDTT protection is in effect.

D. Remove the HPI system from service since it is no longer required by Tech Specs.

Technical Reference TS Basis for 3.1.12.3b Amendment 216, Page 3.18f, Amendment 186.

Open Exam Reference

Learning Objective V.B.06.09 State the temperature requirement for closing MU-V217, 16A, 16B, 16C and 16D and opening and tagging their breakers.

Question Source ☑ New ☐ TMI Bank TMI Question #
☐ Modified TMI Bank Parent Question #

Question History ☐ Used in Last Two TMI NRC Exams Exam Date
☐ Used in Audit Exam ☐ Used in Training Program Quiz Date

Question Cognitive Level ☑ Memory or Fundamental Knowledge
☐ Comprehension or Analysis

10 CFR Part 55 Content ☑ 55.41 .5 ☐ 55.43 ☑ 55.45 .5

Discriminant Validity Statements

A Correct answer.

B Plausible since higher makeup pump flow rates are available at lower RCS pressures.

C Plausible since the PORV will be placed in service during the cooldown.

D Plausible since HPI is a TS related system.

Comments None.

Form ES-401-6 **Written Exam Question Worksheet** Q # 042

Examination Outline Cross-Reference RO SRO

KA # SYSTEM 004 A3.02 Page 3.2-14 Tier # 2

RO/SRO Importance Rating 3.6 3.6 Group # 1

Measurement Ability to monitor automatic operation of the CVCS letdown isolation.

Proposed Question ☑ RO ☑ SRO **Correct Answer** D

Plant conditions:
- Reactor power is 100%.
- RCS Letdown flow is 45 gpm.

From the list below, identify the ONE (1) condition that will result in AUTOMATIC TERMINATION of RCS letdown flow in the event of a LETDOWN LINE RUPTURE at the RB outside wall penetration.

A. Low Pressurizer level.

B. Reactor Trip Isolation.

C. Low Makeup Tank level.

D. High letdown line temperature.

Technical Reference Operations Training Handout 3210-99-067, High Temperature Isolation of Letdown Line, dated 8/13/99.

Open Exam Reference

Learning Objective IV.A.09.11 State the interlocks associated with the following MU&P system components:
b. MU-V-2A/2B

Question Source ☑ New ☐ TMI Bank TMI Question #
☐ Modified TMI Bank Parent Question #

Question History ☐ Used in Last Two TMI NRC Exams Exam Date
☐ Used in Audit Exam ☐ Used in Training Program Quiz Date

Question Cognitive Level ☐ Memory or Fundamental Knowledge
☑ Comprehension or Analysis

10 CFR Part 55 Content ☑ 55.41 .7 ☐ 55.43 ☑ 55.45 .5

Discriminant Validity Statements

A Plausible misconception since RCS mass inventory loss would eventually result in low Pressurizer level, and there are other automatic interlocks based on this parameter.

B Plausible distracter since RTI did automatically isolate letdown flow in the past, prior to plant modification.

C Plausible misconception since low Makeup Tank level interlock transfers bleed/feed valve MU-V-8 to the THRU position.

D Correct answer.

Comments Recent plant modification was installed to address letdown line rupture isolation.

Form ES-401-6

Written Exam Question Worksheet

Q # 043

Examination Outline Cross-Reference

					RO	SRO
KA #	SYSTEM 013 K1.03	Page	3.2-24	Tier #	2	
RO/SRO Importance Rating	3.8	4.1		Group #	2	

Measurement Knowledge of the physical connections and/or cause-effect relationships between the ESFAS and CCS: CCS response to ESAS actuation.

Proposed Question ☑ RO ☑ SRO **Correct Answer** D

Identify the ONE (1) statement below that describes the signal(s) that will actuate ES LINE BREAK ISOLATION on Nuclear Services Closed Cooling System.

A. 1600 psig RCS ES Actuation.

B. 30 psig RB HI HI ES Actuation.

C. Reactor Trip Isolation (RTI) concurrent with NSCC System Low Surge Tank Level.

D. 4 psig RB ES Actuation concurrent with NSCC System Low Surge Tank Level.

Technical Reference OP 1105-3, Safeguards Actuation System, Rev. 40, Page 23.
OPM Section B-10, Intermediate Closed Cooling Water System, Rev. 8, Page 6.

Open Exam Reference

Learning Objective IV.B.03.07 Describe the effects of Line Break Isolation on the ICCW system to include:
1. Actuation signal

Question Source ☑ New ☐ TMI Bank TMI Question #
☐ Modified TMI Bank Parent Question #

Question History ☐ Used in Last Two TMI NRC Exams Exam Date
☐ Used in Audit Exam ☐ Used in Training Program Quiz Date

Question Cognitive Level ☑ Memory or Fundamental Knowledge
☐ Comprehension or Analysis

10 CFR Part 55 Content ☑ 55.41 .2 to .9 ☐ 55.43 ☑ 55.45 .7 to .8

Discriminant Validity Statements

A Plausible since an ES signal is required to initiate LBI.

B Plausible since 30 psig ES actuation closes the same valves.

C Plausible misconception that RTI and Low Surge tank would cause LBI.

D Correct answer.

Comments None.

Form ES-401-6

Written Exam Question Worksheet

Q # 044

Examination Outline Cross-Reference

RO SRO

KA # SYSTEM 013 A2.01 Page 3.2-26 Tier # 2

RO/SRO Importance Rating 4.6 4.8 Group # 1

Measurement Ability to (a) predict the impact of a LOCA on the ESFAS, and (b) based on those predictions, use procedures to correct, control, or mitigate the consequences; ESAS response to a LOCA - sequence of actuations.

Proposed Question ☑ RO ☑ SRO **Correct Answer** D

Plant conditions:
- Small Break LOCA is in progress.
- RCS pressure is 1500 psig and decreasing.
- Pressurizer level is 120 inches and decreasing.
- Reactor Building pressure is 1.9 psig and increasing.
- MU-P-1A and MU-P-1B are operating.
- MU-V-217 is THROTTLED OPEN.
- Makeup flow rate is 300 gpm .

Identify the ONE (1) statement below that describes required operator actions for this condition.

A. Fully open MU-V-217.

B. Start MU-P-1C AND open MU-V-16A/B/C/D.

C. Depress Train B manual 1600 psig ESAS button.

D. Depress Train A AND Train B 1600 psig ESAS manual actuation buttons.

Technical Reference ATP 1210-1, Reactor Trip, Rev. 40, Page 4.
ATP 1210-10, Abnormal Transients Rules, Guides and Graphs, Rev. 37, Page 7.

Open Exam Reference

Learning Objective IV.E.24.20 Using console indication, demonstrate or describe the method for manually actuating HPI, RB isolation and cooling or RB high-high pressure ESAS actuation.

Question Source ☑ New ☐ TMI Bank TMI Question #
☐ Modified TMI Bank Parent Question #

Question History ☐ Used in Last Two TMI NRC Exams Exam Date
☐ Used in Audit Exam ☐ Used in Training Program Quiz Date

Question Cognitive Level ☐ Memory or Fundamental Knowledge
☑ Comprehension or Analysis

10 CFR Part 55 Content ☑ 55.41 .5 ☑ 55.43 .5 ☑ 55.45 .3, .13

Discriminant Validity Statements

A Plausible since this would increase inventory, per ATP-1210-1, Reactor Trip.

B Plausible since this would increase inventory, but wouldn't satisfy HPI or ES line up requirements.

C Plausible since this would initiate 1 train of HPI, therefore starting MU-P-1c and opening MU-V-1C/D.

D Correct answer.

Comments None.

Form ES-401-6

Written Exam Question Worksheet

Q # 045

Examination Outline Cross-Reference

RO SRO

KA # SYSTEM 013 K4.11 Page 3.2-25 Tier # 2

RO/SRO Importance Rating 3.2 3.8 Group # 1

Measurement Knowledge of ESAS design feature(s) and/or interlock(s) which provide for vital power load control (Non-ES NR-P trip on ES actuation).

Proposed Question ☑ RO ☑ SRO **Correct Answer** B

Initial conditions:
- Reactor power was 100%.
- NR-P-1A and NR-P-1C were running (both are ES selected).
- NR-P-1B powered from 1T 480V bus and in standby (normal after stop).

Sequence of events:
- Small break LOCA.
- Reactor trip.
- ESAS Actuations: 1600# AND 4#.
- No safety systems have been bypassed or defeated.

From the list below identify the ONE (1) statement that describes NR-P-1B status if NR-P-1A trips under these conditions.

A. NR-P-1B will automatically start.

B. NR-P-1B can be manually started.

C. NR-P-1B will only start if it is ES selected on 1R 480V bus.

D. NR-P-1B will only start if it is powered from the 1R 480V bus.

Technical Reference EP 1202-38, Nuclear Services River Water Failure, Rev. 37, Page 2.

Open Exam Reference

Learning Objective V.D.19.01, V.D.19.02 State Immediate Automatic Actions that occur for a failure of the Nuclear Services River Water system per EP 1202-38.
State the Immediate Manual Actions required for a failure of the Nuclear Services River Water per EP 1202-38.

Question Source ☑ New ☐ TMI Bank TMI Question #
☐ Modified TMI Bank Parent Question #

Question History ☐ Used in Last Two TMI NRC Exams Exam Date
☐ Used in Audit Exam ☐ Used in Training Program Quiz Date

Question Cognitive Level ☐ Memory or Fundamental Knowledge
☑ Comprehension or Analysis

10 CFR Part 55 Content ☑ 55.41 .7 ☐ 55.43 ☐ 55.45

Discriminant Validity Statements

A Plausible because it would automatically start with no ES signal present.

B Correct answer.

C Plausible because of ES signal present and NR-P-1A was on 1R 480V bus.

D Plausible because NR-P-1A was powered from 1R 480V bus.

Comments None.

Form ES-401-6

Written Exam Question Worksheet

Q # 046

Examination Outline Cross-Reference

					RO	SRO
KA #	SYSTEM 015 K3.04	Page	3.7-5	Tier #	2	
RO/SRO Importance Rating	3.4	4		Group #	1	

Measurement Knowledge of the effect that a loss or malfunction of the NIS will have on the ICS: Effect of loss of NI signal input to ICS.

Proposed Question ☑ RO ☑ SRO **Correct Answer** C

Plant conditions:
- Reactor power is 60%, following response to an asymmetric (dropped) rod in Group 5.
- Reactor power channel SASS mismatch is present due to the dropped rod.
- All ICS stations are in AUTO.
- NI-5 is selected for ICS control.

With no operator action, from the list below identify the ONE (1) set of events that will initially result if NI-5 output fails to 0%.

A. Control rods will NOT insert/withdraw, AND feedwater flow will DECREASE.

B. Control rods will NOT insert/withdraw, AND feedwater flow will NOT change.

C. Control rods will WITHDRAW, AND feedwater flow will DECREASE.

D. Control rods will WITHDRAW, AND feedwater flow will INCREASE.

Technical Reference ARP MAP G-2-3, CRD Outmotion Inhibit, Rev. 6, Pages 1 & 2.
ARP MAP H-1-4, Neutron X-Limit to FW, Rev. 12, Page 1.

Open Exam Reference

Learning Objective IV.E.27.60 Given a set of plant conditions, determine the correct ICS response and any actions that must be taken if the ICS response is incorrect.

Question Source ☑ New ☐ TMI Bank TMI Question #
☐ Modified TMI Bank Parent Question #

Question History ☐ Used in Last Two TMI NRC Exams Exam Date
☐ Used in Audit Exam ☐ Used in Training Program Quiz Date

Question Cognitive Level ☐ Memory or Fundamental Knowledge
☑ Comprehension or Analysis

10 CFR Part 55 Content ☑ 55.41 .7 ☐ 55.43 ☑ 55.45 .6

Discriminant Validity Statements

A Plausible because of actual reactor power being at 60% (auto out inhibit), and neutron cross-limits will cause FW to decrease.

B Plausible because of actual reactor power being at 60% (auto out inhibit), and misconception that FW will also not change.

C Correct answer because indicated power (NI-5) will be less than 60% causing large positive neutron error, and neutron cross-limits will cause FW to decrease.

D Plausible because indicated power (NI-5) will be less than 60% causing large positive neutron error, and misconception that FW will change in same direction.

Comments None.

Form ES-401-6

Written Exam Question Worksheet

Q # 047

Examination Outline Cross-Reference

					RO	SRO
KA #	SYSTEM 015 K4.08	Page	3.7-6	Tier #	2	
RO/SRO Importance Rating	3.4	3.7		Group #	1	

Measurement Knowledge of NIS design feature(s) and/or interlock(s) that provide automatic rod motion on demand signals: neutron error rod motion command signal.

Proposed Question ☑ RO ☑ SRO **Correct Answer** B

Plant conditions:
- Reactor power is 85% following a failure in ICS SG/Rx Master.
- ICS stations in HAND:
  - SG/Rx Master.
  - Reactor Demand.
  - BOTH FW Loop Masters.
- All other stations, including the Diamond Rod Control Panel, are in AUTO.
- Control rod index is 275%.

The reactor operator inserts Group 8 rods from 30% to 20% to adjust core power imbalance. This action adds negative reactivity to the core and causes a decrease in reactor power.

From the list below identify the ONE (1) statement that describes Control Rod Group 7 response during the insertion of Group 8 rods under the conditions described above.

A. Insert due to a negative ICS neutron error.

B. Withdraw due to a positive ICS neutron error.

C. Not move because Group-8 is being inserted.

D. Not move because neutron error will be zero (0).

Technical Reference OP 1105-9, Control Rod Drive System, Rev. 56, Page 48.
OPM Section F-01, Control Rod Drive System, Rev. 7, Page 87.
OPM Section F-03, Integrated Control System, Rev. 9, Page 46.

Open Exam Reference

Learning Objective IV.E.27.60 Given a set of plant conditions, determine the correct ICS response and any actions that must be taken if the ICS response is incorrect.

Question Source ☑ New ☐ TMI Bank TMI Question #
☐ Modified TMI Bank Parent Question #

Question History ☐ Used in Last Two TMI NRC Exams Exam Date
☐ Used in Audit Exam ☐ Used in Training Program Quiz Date

Question Cognitive Level ☐ Memory or Fundamental Knowledge
☑ Comprehension or Analysis

10 CFR Part 55 Content ☑ 55.41 .7 ☐ 55.43 ☐ 55.45

Discriminant Validity Statements

A Plausible if misconception that negative neutron error will result.

B Correct answer.

C Plausible because Group-8 is being inserted.

D Plausible because Reactor Demand station is in HAND (but Diamond remains in AUTO).

Comments None.

Form ES-401-6

Written Exam Question Worksheet

Q # 048

Examination Outline Cross-Reference

					RO	SRO
KA #	SYSTEM 017 K5.02	Page	3.7-11	Tier #	2	
RO/SRO Importance Rating	3.7	4		Group #	1	

Measurement Knowledge of the operational implications of saturation and subcooling of water concepts applicable to the Incore Temperature Monitor (ITM) system: use of incore thermocouples to determine RCS subcooling margin.

Proposed Question ☑ RO ☑ SRO **Correct Answer** C

Plant conditions:
- Reactor Trip following LOSS OF STATION POWER.
- Current plant parameters:
  - Loop A SCM meter indication = 7 F Loop B SCM meter indication = 12 F.
  - Loop A T-Hot 460 F Loop B T-Hot 455 F.
  - Loop A T-Cold 425 F Loop B T-Cold 425 F.
  - RCS Wide Range Pressure (PI-949A) = 485 psig.
  - Average of the 5 highest operable incore thermocouples (Pt. C4006) = 440 F.

From the list below, identify the ONE(1) correct value for RCS subcooling margin under these conditions.

A. 7 degrees F.

B. 12 degrees F.

C. 27 degrees F.

D. 42 degrees F.

Technical Reference ATP 1210-10, Abnormal Transients Rules, Guides and Graphs, Rev. 37, Page 4. Steam Tables.

Open Exam Reference Steam Tables.

Learning Objective V.E.10.08 Given plant condition/status determine what "Rules" of ATP 1210-10 Abnormal Transient Rules, Guides and Graphs, apply and what actions are required to be taken.

Question Source ☑ New ☐ TMI Bank TMI Question #
☐ Modified TMI Bank Parent Question #

Question History ☐ Used in Last Two TMI NRC Exams Exam Date
☐ Used in Audit Exam ☐ Used in Training Program Quiz Date

Question Cognitive Level ☐ Memory or Fundamental Knowledge
☑ Comprehension or Analysis

10 CFR Part 55 Content ☑ 55.41 .5 ☐ 55.43 ☑ 55.45 .7

Discriminant Validity Statements

A Plausible if 460 degrees F is incorrectly used to determine SCM.

B Plausible if 455 degrees F is incorrectly used to determine SCM.

C Correct answer.

D Plausible if 425 degrees F is incorrectly used to determine SCM.

Comments None.

Form ES-401-6

Written Exam Question Worksheet

Q # 049

Examination Outline Cross-Reference

					RO	SRO
KA #	SYSTEM 022 A2.04	Page	3.5-6	Tier #	2	
RO/SRO Importance Rating	2.9	3.2		Group #	1	

Measurement Ability to predict impact(s) of loss of service water or operations on the CCS and (b) based on those predictions, use procedures to correct, control, or mitigate the consequences of those malfunctions or operations.

Proposed Question ☑ RO ☑ SRO **Correct Answer** C

Plant conditions:
- Reactor trip from 100% power.
- Large break LOCA.
- ATOG immediate actions have been completed.
- RR-P-1A tripped, and can not be restarted.
- RR-P-1B is operating.
- RB pressure and temperature are elevated.
- Pressurizer level indication = 18 inches.

Identify the ONE (1) statement below that describes the EFFECT AND CAUSE for erroneous Pressurizer Level indication under these plant conditions.

A. Level indicates high due to RB depressurization effects by RB spray.

B. Level indicates low due to RB depressurization effects by RB spray.

C. Level indicates high due to boiling in the reference leg.

D. Level indicates low due to boiling in the reference leg.

Technical Reference ATP 1210-10, Abnormal Transients Rules, Guides and Graphs, Rev. 37, Page 9.

Open Exam Reference

Learning Objective IV.E.09.02 Given an NNI instrument and a failure mode, identify how the instrument will respond and what interlock(s) or control function(s) will be affected, including effects on system/component operation.

Question Source ☐ New ☐ TMI Bank TMI Question #
☐ Modified TMI Bank Parent Question #

Question History ☑ Used in Last Two TMI NRC Exams Exam Date 1998 TMI SRO
☐ Used in Audit Exam ☐ Used in Training Program Quiz Date

Question Cognitive Level ☐ Memory or Fundamental Knowledge
☑ Comprehension or Analysis

10 CFR Part 55 Content ☑ 55.41 .5 ☑ 55.43 .5 ☑ 55.45 .13

Discriminant Validity Statements

A Plausible misconception regarding effect of RB depressurization after a LOCA.

B Plausible misconception regarding effect of RB depressurization after a LOCA.

C Correct answer.

D Plausible misconception (opposite effect) of reference leg boiling on level indication.

Comments 1998 TMI SRO Exam Question 37.

Form ES-401-6

Written Exam Question Worksheet

Q # 050

Examination Outline Cross-Reference

					RO	SRO
KA #	SYSTEM 056 A2.04	Page	3.4-39	Tier #	2	
RO/SRO Importance Rating	2.6	2.8		Group #	1	

Measurement Ability to (a) predict the impacts of loss of condensate pumps or operations on the Condensate System and (b) based upon those predictions, use procedures to correct, control, or mitigate the consequences of those malfunctions or operations: impact/actions on loss of Condensate pumps.

Proposed Question ☑ RO ☑ SRO **Correct Answer** B

Plant conditions:
- Plant heatup in progress, RCS temperature is 428 degrees F.
- OTSG 1A/1B pressures are both 330 psig.
- OTSG 1A/1B levels are both 25" on Startup Range.
- FW-V-16A and FW-V-16B are in hand control.
- Startup Feedwater Flow is 0.1E6 lbm per hour to each OTSG.
- CO-P-1A is running, CO-P-1B and CO-P-1C are in Normal After Stop.
- CO-P-2A is operating, CO-P-2B is Out-of-Service, CO-P-2C is in Normal After Stop
- FW-P-1A/1B are both tripped.

From the list below, identify the ONE (1) statement that describes initial startup feedwater flow response if CO-P-2A trips and CO-P-2C does not auto start.

A. Decrease to 0 lbm/hr due to automatic trip of CO-P-1A.

B. Decrease to 0 lbm/hr due to condensate pump operating characteristics.

C. Remain the same.

D. Increase.

Technical Reference OP 1102-1, Plant Heatup to 525 Degrees F, Rev. 152, Pages 9 & 28.
Condensate Pump Flow vs. Dynamic Head Curve, Rev. 4.

Open Exam Reference

Learning Objective IV.C.02.11 Describe the interface between the Condensate System and the following system:
a. Feedwater

Question Source ☑ New ☐ TMI Bank TMI Question #
☐ Modified TMI Bank Parent Question #

Question History ☐ Used in Last Two TMI NRC Exams Exam Date
☐ Used in Audit Exam ☐ Used in Training Program Quiz Date

Question Cognitive Level ☐ Memory or Fundamental Knowledge
☑ Comprehension or Analysis

10 CFR Part 55 Content ☑ 55.41 .5 ☑ 55.43 .5 ☑ 55.45 .3, .13

Discriminant Validity Statements

A Plausible misconception on the pump counting circuit.

B Correct answer.

C Plausible misconception that CO-P-1A will maintain sufficient flow.

D Plausible misconception if examinee thinks CO-P-1B will auto start due to failure of CO-P-2C to start.

Comments None.

Form ES-401-6

Written Exam Question Worksheet

Q # 051

Examination Outline Cross-Reference

				RO	SRO
KA #	SYSTEM 056 K1.03	Page	3.4-36	Tier #	2
RO/SRO Importance Rating	2.6	2.6		Group #	1

Measurement Knowledge of the physical connections and/or cause-effect relationships between the Condensate System and Main Feedwater System: MFW/Condensate System interrelations.

Proposed Question ☑ RO ☑ SRO **Correct Answer** B

Initial plant conditions:
- Reactor power is 100%.
- CO-P-1A and CO-P-1B are running, CO-P-1C is in Normal-After-Stop.
- CO-P-2A and CO-P-2B are running, CO-P-2C is in Normal-After-Stop.
- CO-P-1B breaker trips on an electrical fault.
- After a period of two (2) seconds, CO-P-1C automatically starts.

From the list below, identify the ONE (1) statement that describes the plant response for these conditions.

A. One condensate booster pump will trip, both main feed pumps remain running, with an ICS runback.

B. One condensate booster pump and one main feed pump will trip, with an ICS runback.

C. One main feed pump will trip, both condensate booster pumps remain running, with an ICS runback.

D. Both main feed pumps trip, one condensate booster pump trips and the reactor trips.

Technical Reference OPM Section G-01, Condensate System, Rev. 13, Page 7.

Open Exam Reference

Learning Objective IV.C.02.10 State the interlocks associated with the condensate and condensate booster pumps.

Question Source ☐ New ☐ TMI Bank TMI Question #
☐ Modified TMI Bank Parent Question #

Question History ☑ Used in Last Two TMI NRC Exams Exam Date 1998 TMI SRO
☐ Used in Audit Exam ☐ Used in Training Program Quiz Date

Question Cognitive Level ☐ Memory or Fundamental Knowledge
☑ Comprehension or Analysis

10 CFR Part 55 Content ☑ 55.41 .2 to .9 ☐ 55.43 ☑ 55.45 .7 to .8

Discriminant Validity Statements

A Plausible misconception regarding extremely complicated condensate-condensate booster pump counting circuit.

B Correct answer.

C Plausible misconception regarding extremely complicated condensate-condensate booster pump counting circuit.

D Plausible misconception regarding extremely complicated condensate-condensate booster pump counting circuit.

Comments 1998 TMI SRO Exam Question 29.

Form ES-401-6

Written Exam Question Worksheet

Q # 052

Examination Outline Cross-Reference

					RO	SRO
KA #	SYSTEM 059 K1.07	Page	3.4-41	Tier #	2	
RO/SRO Importance Rating	3.2	3.2		Group #	1	

Measurement Knowledge of the physical connections and/or cause-effect relationships between the MFW and ICS systems.

Proposed Question ☑ RO ☑ SRO **Correct Answer** B

Plant conditions:
- Reactor power is 90%.
- ICS is in full automatic.
- A high pressure feedwater heater string has just been removed from service.

From the list below, identify the ONE (1) statement that describes the expected ICS response to these conditions.

A. Steam Generator BTU limits would be reached AND the unit would be placed in TRACK.

B. The Feedwater Demand signal would be modified to DECREASE feedwater flow.

C. Feedwater to Reactor Crosslimits would be reached AND the unit would be placed in TRACK.

D. The Feedwater Demand signal would be modified to INCREASE feedwater flow.

Technical Reference ICS Print D553731, Feedwater Control Analog Logic, Rev. Q.

Open Exam Reference

Learning Objective IV.E.27.22 Predict the effect of a feedwater temperature change (increase or decrease) on the total feedwater demand signal.

Question Source ☐ New ☐ TMI Bank TMI Question #
☐ Modified TMI Bank Parent Question #

Question History ☑ Used in Last Two TMI NRC Exams Exam Date 1995 TMI RO
☐ Used in Audit Exam ☐ Used in Training Program Quiz Date

Question Cognitive Level ☐ Memory or Fundamental Knowledge
☑ Comprehension or Analysis

10 CFR Part 55 Content ☑ 55.41 .2 to .9 ☐ 55.43 ☑ 55.45 .7 to .8

Discriminant Validity Statements

A Plausible distracter if BTU limit operation is misunderstood.

B Correct answer.

C Plausible distracter if cross limit operation is misunderstood.

D Plausible distracter if FW temperature effects are misunderstood.

Comments 1995 TMI RO Exam Question 1.

Form ES-401-6

Written Exam Question Worksheet

Q # 053

Examination Outline Cross-Reference

					RO	SRO
KA #	2.1.30	Page	2-4	Tier #	2	
RO/SRO Importance Rating	3.9	3.4		Group #	1	

Measurement Ability to locate and operate components, including local controls: Main FW controls.

Proposed Question ☑ RO ☑ SRO **Correct Answer** D

Plant conditions and events:
- A loss of B-DC power occurs while at 100% power.
- Power is reduced to 65% and stabilized.
- Main FW valve differential pressure is stable at 35 psid.
- FW-P-1A ICS station is transferred to HAND due to speed oscillations.
- FW-P-1B vibrations begin to increase above operating limits.
- The shift foreman orders you to reduce FW-P-1B speed and flow.
- FW-P-1B ICS station will NOT transfer to HAND.

Under these conditions, from the list below identify how FW-P-1B speed and flow can be reduced FROM THE CONTROL ROOM.

A. Lower FW-P-1B motor speed changer setting.

B. Lower FW-P-1B ICS demand using FW-P-1A bias control.

C. Raise FW-P-1A ICS demand using FW-P-1A bias control.

D. Raise FW-P-1A ICS demand using its ICS station.

Technical Reference EP 1202-9B, Loss of B DC Distribution System, Rev. 40, Page 4.
OP 1105-4, Integrated Control System, Rev. 60, Page 16.
ICS Print D553731, Feedwater Control Analog Logic, Rev. Q.

Open Exam Reference

Learning Objective IV.C.04.07 Describe how Main Feedwater Pump speed is controlled at the pump, manually from the control room and automatically by the ICS.

Question Source ☑ New ☐ TMI Bank TMI Question #
☐ Modified TMI Bank Parent Question #

Question History ☐ Used in Last Two TMI NRC Exams Exam Date
☐ Used in Audit Exam ☐ Used in Training Program Quiz Date

Question Cognitive Level ☐ Memory or Fundamental Knowledge
☑ Comprehension or Analysis

10 CFR Part 55 Content ☑ 55.41 .7 ☐ 55.43 ☑ 55.45 .7

Discriminant Validity Statements

A Plausible because this is normally an alternative method of speed control.

B Plausible if FW-P-1A was in AUTO.

C Plausible if FW-P-1A was in AUTO.

D Correct answer.

Comments None.

Form ES-401-6

Written Exam Question Worksheet

Q # 054

Examination Outline Cross-Reference

					RO	SRO
KA #	SYSTEM 061 K2.02	Page	3.4-45	Tier #	2	
RO/SRO Importance Rating	3.7	3.7		Group #	1	

Measurement Knowledge of bus power supplies to the AFW electric driven pumps: EF-P-2A/2B power supplies.

Proposed Question ☑ RO ☑ SRO **Correct Answer** D

During operation at 100% power, Auxiliary Transformer 1B develops a fault and is automatically isolated by protective relay operation.

From the list below identify the ONE (1) source of power that would NOT be available to support operation of EF-P-2A.

A. SBO Diesel.

B. Auxiliary Transformer 1A.

C. A Emergency Diesel Generator.

D. B Emergency Diesel Generator.

Technical Reference OPM Section A-01, BOP and 1E Electrical Distribution (Including Substation), Rev. 18, Page 83.

Open Exam Reference

Learning Objective IV.C.05.19 State the power supplies to EF-P-2A/B.

Question Source ☑ New ☐ TMI Bank TMI Question #
☐ Modified TMI Bank Parent Question #

Question History ☐ Used in Last Two TMI NRC Exams Exam Date
☐ Used in Audit Exam ☐ Used in Training Program Quiz Date

Question Cognitive Level ☐ Memory or Fundamental Knowledge
☑ Comprehension or Analysis

10 CFR Part 55 Content ☑ 55.41 .7 ☐ 55.43 ☐ 55.45

Discriminant Validity Statements

A Plausible since it can supply 1D 4160V Bus.

B Plausible since it can supply 1D 4160V Bus.

C Plausible since it can supply 1D 4160V Bus.

D Correct answer.

Comments None.

Form ES-401-6

Written Exam Question Worksheet

Q # 055

Examination Outline Cross-Reference

					RO	SRO
KA #	SYSTEM 061 K5.01	Page	3.4-46	Tier #	2	
RO/SRO Importance Rating	3.6	3.9		Group #	1	

Measurement Knowledge of the operational implications of the relationship between AFW flow and RCS heat transfer as they apply to AFW: RCS heat transfer using EFW.

Proposed Question ☑ RO ☑ SRO **Correct Answer** B

From the list below, identify the ONE (1) statement that explains the reason(s) EFW is injected into the OTSG near the top of the tube bundle.

A. Reduce the thermal stress on the upper tubesheet AND MFW nozzles.

B. Reduce the thermal stress on the lower tubesheet AND elevate the thermal center of the OTSG.

C. Reduce the thermal stress on the upper shell (steam exit region) AND elevate the thermal center of the OTSG.

D. Reduce the thermal stress on the lower tubesheet since the upper tubesheet can withstand a higher thermal stress than the lower tube sheet.

Technical Reference OPM Section B-04, Once Through Steam Generator, Rev. 8, Page 10.

Open Exam Reference

Learning Objective IV.A.08.11 State the purpose of the emergency feedwater nozzles of the OTSG.

Question Source ☐ New ☐ TMI Bank TMI Question #
☐ Modified TMI Bank Parent Question #

Question History ☑ Used in Last Two TMI NRC Exams Exam Date 1998 TMI SRO
☐ Used in Audit Exam ☐ Used in Training Program Quiz Date

Question Cognitive Level ☑ Memory or Fundamental Knowledge
☐ Comprehension or Analysis

10 CFR Part 55 Content ☑ 55.41 .5 ☐ 55.43 ☑ 55.45 .7

Discriminant Validity Statements

A Plausible distracter since MFW nozzles are not used for cold EFW (and therefore stress is reduced). Reduction in upper tube sheet stress is also plausible misconception.

B Correct answer. Includes considerations for natural circulation heat removal and stress considerations due to cold water effects on lower tubesheet.

C This is the correct reason for EFW injection high in the tube bundle, but it reduces stresses in the lower shell rather than the upper OTSG shell.

D This correctly addresses reduction of stress on the lower tube sheet, but it includes the plausible misconception that the upper tube sheet can withstand greater stress than the lower tube sheet.

Comments 1998 TMI SRO Exam Question 82.

Form ES-401-6

Written Exam Question Worksheet

Q # 056

Examination Outline Cross-Reference

RO SRO

KA # SYSTEM 068 A4.02 Page 3.9-4 Tier # 2

RO/SRO Importance Rating 3.2 0 Group # 1

Measurement Ability to manually operate and/or monitor remote liquid radwaste release in the control room.

Proposed Question ☑ RO ☑ SRO **Correct Answer** D

Identify the ONE (1) parameter associated with a radioactive liquid release to the river that can be monitored ONLY OUTSIDE THE CONTROL ROOM.

A. RM-L-7, Plant Effluent radiation monitor.

B. SR-FR-146, Plant Effluent flowrate to river.

C. RM-L-6, Radwaste Release radiation monitor.

D. WDL-FR-84, Radwaste Release Flowrate to Plant Effluent.

Technical Reference OP 1104-29S, Transfers from the Waste Evaporator Condensate Storage Tanks, Rev. 54, Page 14.

Open Exam Reference

Learning Objective IV.B.09.04 Describe how to perform an authorized release of a W.E.C.S.T. to the effluent of the MDCT. Include all interlocks and automatic protection associated with discharges to the environment.

Question Source ☑ New ☐ TMI Bank TMI Question #

☐ Modified TMI Bank Parent Question #

Question History ☐ Used in Last Two TMI NRC Exams Exam Date

☐ Used in Audit Exam ☐ Used in Training Program Quiz Date

Question Cognitive Level ☑ Memory or Fundamental Knowledge

☐ Comprehension or Analysis

10 CFR Part 55 Content ☑ 55.41 .7 ☐ 55.43 ☑ 55.45 .5 to .8

Discriminant Validity Statements

A Plausible parameter monitored in control room.

B Plausible parameter monitored in control room.

C Plausible parameter monitored in control room.

D Correct answer.

Comments None.

Form ES-401-6

Written Exam Question Worksheet

Q # 057

Examination Outline Cross-Reference

					RO	SRO
KA #	SYSTEM 071 K5.04	Page	3.9-6	Tier #	2	
RO/SRO Importance Rating	2.5	3.1		Group #	1	

Measurement Knowledge of the operational implication of the relationship of hydrogen/oxygen concentrations to flammability as they apply to the Waste Gas Disposal System: Hydrogen/Oxygen flammability concentrations.

Proposed Question ☑ RO ☑ SRO **Correct Answer** C

Identify the ONE (1) reason below that Hydrogen/Oxygen levels are monitored and controlled in the Waste Gas System during normal plant operation.

A. Minimize the number of radioactive gas releases.

B. Prevent the need for a Confined Space Permit for personnel entry.

C. Prevent reaching explosive gas concentrations in the Waste Gas Delay Tank.

D. Minimize excessive use of Nitrogen to reduce H2/O2 concentrations during a release.

Technical Reference OP 1104-27, Waste Disposal - Gaseous, Rev. 63, Page 4.

Open Exam Reference

Learning Objective IV.B.08.07 Explain the operator actions for the following Waste Gas Disposal system events:
a. high hydrogen gas concentration
b. high oxygen gas concentration

Question Source ☑ New ☐ TMI Bank TMI Question #
☐ Modified TMI Bank Parent Question #

Question History ☐ Used in Last Two TMI NRC Exams Exam Date
☐ Used in Audit Exam ☐ Used in Training Program Quiz Date

Question Cognitive Level ☑ Memory or Fundamental Knowledge
☐ Comprehension or Analysis

10 CFR Part 55 Content ☑ 55.41 .5 ☐ 55.43 ☑ 55.45 .7

Discriminant Validity Statements

A Plausible since minimizing gas volumes will limit release frequency.

B Plausible since these gases are monitored for confined space entry.

C Correct answer.

D Plausible since nitrogen is used to purge the system to minimize concentrations.

Comments None.

Form ES-401-6

Written Exam Question Worksheet

Q # 058

Examination Outline Cross-Reference

RO SRO

KA # SYSTEM 072 K1.04 Page 3.7-13 Tier # 2

RO/SRO Importance Rating 3.3 3.5 Group # 1

Measurement Knowledge of the physical connections and/or cause-effect relationships between the Area Radiation Monitoring (ARM) system and control room ventilation: Control Building ventilation RMS interlocks.

Proposed Question ☑ RO ☑ SRO **Correct Answer** A

Plant conditions:
- Control Building ventilation system in normal operation.
- AH-E-17A and AH-E-19A, normal control building supply and return fans, are running.

From the list below, identify the ONE (1) statement that describes the automatic action(s) that will result from a High alarm on the Control Room RM-A-1 Gas radiation monitoring channel.

A. AH-E-17A, Control Building Supply Fan, trips.

B. AH-E-18B, Control Building Emergency Recirculation Fan, starts.

C. AH-E-17A, Control Building Supply Fan, trips, AND AH-E-18A, Control Building Emergency Recirculation Fan, starts.

D. AH-E-17A, Control Building Supply Fan, trips, AND AH-E-18B, Control Building Emergency Recirculation Fan, starts.

Technical Reference ARP MAP C-1-1, Radiation Level Hi, Rev. 20, Page 2 (RM-A-1).

Open Exam Reference

Learning Objective IV.F.01.13 Given specific plant/system conditions, identify the effects of interlocks on the following control building H&V components:
a. supply fans
b. return (exhaust) fans
g. emergency recirc fans

Question Source ☑ New ☐ TMI Bank TMI Question #
☐ Modified TMI Bank Parent Question #

Question History ☐ Used in Last Two TMI NRC Exams Exam Date
☐ Used in Audit Exam ☐ Used in Training Program Quiz Date

Question Cognitive Level ☑ Memory or Fundamental Knowledge
☐ Comprehension or Analysis

10 CFR Part 55 Content ☑ 55.41 .2 to .9 ☐ 55.43 ☑ 55.45 .7 to .8

Discriminant Validity Statements

A Correct answer.

B Plausible because this fan would be manually started.

C Plausible because an AH-E-18 fan would be manually started.

D Plausible because an AH-E-18 fan would be manually started.

Comments None.

Form ES-401-6

Written Exam Question Worksheet

Q # 059

Examination Outline Cross-Reference

				RO	SRO
KA #	SYSTEM 072 A3.01	Page	3.7-14	Tier #	2
RO/SRO Importance Rating	2.9	3.1		Group #	1

Measurement Ability to monitor automatic operation of the Area Radiation Monitoring (ARM) system, including changes in ventilation alignment: RMS interlocks which provide ventilation alignment changes.

Proposed Question ☑ RO ☑ SRO **Correct Answer** B

From the list below, identify the ONE (1) statement that describes Reactor Building Purge System response to a High alarm condition on RM-A-9G, Reactor Building Purge Duct monitor.

A. Purge supply fans AH-E-6A/B trip.

B. Purge supply and exhaust isolation valves AH-V-1A/B/C/D close.

C. Purge exhaust fans AH-E-7A/B trip AND purge exhaust isolation valves AH-V-1A/B close.

D. Purge exhaust fans AH-E-7A/B trip AND purge supply and exhaust isolation valves AH-V-1A/B/C/D close.

Technical Reference EP 1202-12, Excessive Radiation Levels, Rev. 45, Page 12.

Open Exam Reference

Learning Objective IV.F.02.06 Given any plant condition, identify Reactor Building Ventilation System functions and responses to high alarms concerning the following RMS instruments.

j. AH-E-6A/6B purge supply fans start/stop controls
k. AH-E-7A/7B purge exhaust fans start/stop controls
l. AH-V-1A/1B/1C/1D RB purge supply and exhaust valves open/close controls

Question Source ☑ New ☐ TMI Bank TMI Question #
☐ Modified TMI Bank Parent Question #

Question History ☐ Used in Last Two TMI NRC Exams Exam Date
☐ Used in Audit Exam ☐ Used in Training Program Quiz Date

Question Cognitive Level ☑ Memory or Fundamental Knowledge
☐ Comprehension or Analysis

10 CFR Part 55 Content ☑ 55.41 .7 ☐ 55.43 ☑ 55.45 .5

Discriminant Validity Statements

A Plausible since dampers close when the fan trips.

B Correct answer.

C Plausible since dampers close when the fan trips.

D Plausible since dampers close when the fan trips.

Comments None.

Form ES-401-6

Written Exam Question Worksheet

Q # 060

Examination Outline Cross-Reference

					RO	SRO
KA #	SYSTEM 002 K5.11	Page	3.4-3	Tier #	2	
RO/SRO Importance Rating	4	4.2		Group #	2	

Measurement Knowledge of the operational implications of the relationship between effects of the primary coolant system and the secondary coolant system: Primary-to-Secondary Heat Transfer.

Proposed Question ☑ RO ☑ SRO **Correct Answer** C

From the list below, identify the ONE(1) value for MINIMUM OTSG level required to establish RCS Boiler-Condenser Cooling.

A. 25 inches on Startup Range.

B. 50% on Operating Range.

C. 75% on Operating Range.

D. 97.5% on Operating Range.

Technical Reference ATP 1210-10, Abnormal Transients Rules, Guides and Graphs, Rev. 37, OTSG Level Rule 1.6, Pages 5 & 6.

Open Exam Reference

Learning Objective V.E.10.12 Explain the principles of Boiler Condenser mode of heat transfer and how the ATOG addresses it.

Question Source ☑ New ☐ TMI Bank TMI Question #
☐ Modified TMI Bank Parent Question #

Question History ☐ Used in Last Two TMI NRC Exams Exam Date
☐ Used in Audit Exam ☐ Used in Training Program Quiz Date

Question Cognitive Level ☐ Memory or Fundamental Knowledge
☑ Comprehension or Analysis

10 CFR Part 55 Content ☑ 55.41 .5 ☐ 55.43 ☑ 55.45 .7

Discriminant Validity Statements

A Plausible distracter since this a normal post trip control level.

B Plausible distracter since this is a normal control level post trip with a loss of RCPs.

C Correct answer.

D Plausible distracter since this value is the maximum post trip SG level.

Comments None.

Form ES-401-6

Written Exam Question Worksheet

Q # 061

Examination Outline Cross-Reference

					RO	SRO
KA #	SYSTEM 006 A4.06	Page	3.2-20	Tier #	2	
RO/SRO Importance Rating	4.4	4.4		Group #	2	

Measurement Ability to manually operate and/or monitor in the control room, ESF control panel.

Proposed Question ☑ RO ☑ SRO **Correct Answer** A

Sequence of events:
- Reactor trip from 100%.
- LOCA occurs resulting in 1600 psig RCS and 4 psig RB ES actuations.
- The plant stabilizes at the following parameters:
  - RCS pressure is 1850 psig.
  - RB pressure is 6 psig.
- Shift Supervisor orders 1600 psig and 4 psig ES actuations cleared so HPI can be throttled.

From the list below, identify the ONE (1) statement that describes pushbuttons required to be depressed in order to clear both the 1600 psig and 4 psig actuation signals on both ES train A & B.

A. The three 1600 psig ENABLE & CHANNEL RESET pushbuttons AND two 4 psig DEFEAT pushbuttons.

B. The three 1600 psig ENABLE & CHANNEL RESET pushbuttons AND two 4 psig ENABLE pushbuttons.

C. The three 1600 psig BYPASS pushbuttons AND two 4 psig DEFEAT pushbuttons.

D. The three 1600 psig BYPASS pushbuttons AND two 4 psig ENABLE pushbuttons.

Technical Reference OP 1105-3, Safeguards Actuation System, Rev. 40, Pages 15 & 16.

Open Exam Reference

Learning Objective IV.E.24.16 Using console indication, demonstrate or describe how to bypass, reset or defeat an ESAS auto actuation. This is to include HPI, LPI, RB isolation and cooling, RB high high pressure and reactor trip isolation.

Question Source ☑ New ☐ TMI Bank TMI Question #
☐ Modified TMI Bank Parent Question #

Question History ☐ Used in Last Two TMI NRC Exams Exam Date
☐ Used in Audit Exam ☐ Used in Training Program Quiz Date

Question Cognitive Level ☐ Memory or Fundamental Knowledge
☑ Comprehension or Analysis

10 CFR Part 55 Content ☑ 55.41 .7 ☐ 55.43 ☑ 55.45 .5 to .8

Discriminant Validity Statements

A Correct answer.

B Plausible misconception that 4 psi can be enabled at 6 psi RB pressure.

C Plausible misconception that 1600 psig can be bypassed at 1850 psi following an actuation.

D Plausible misconception 1600 psig can be bypassed at 1850 psi following an actuation and 4 psi can be enabled at 6 psi RB pressure.

Comments None.

Form ES-401-6

Written Exam Question Worksheet

Q # 062

Examination Outline Cross-Reference

			RO	SRO
KA # 2.4.49	Page 2-16	Tier #	2	
RO/SRO Importance Rating	4	4	Group #	2

Measurement Ability to perform without reference to procedures those actions that require immediate operation of system components and controls: Pressurizer Pressure Control - EP 1202-29 IAs for pressure control malfunction (PORV).

Proposed Question ☑ RO ☑ SRO **Correct Answer** B

Initial plant conditions:
- Cooldown in progress.
- RCS temperature is 430 degrees F.
- RCS pressure is 690 psig.
- RC-P-1A and RC-P-1C are operating.
- PORV NDTT switch is in AUTO.
- Pressurizer level control is in AUTO maintaining 100 inches.

Sequence of events:
- Plant cooldown was stopped in order cycle CF-V-1A and CF-V-1B.
- All plant parameters were stabilized.
- Loop A Wide Range T-cold signal FAILED LOW.

From the list below, identify the ONE (1) statement that describes plant response to this situation.

A. RC-P1A AND RC-P-1C BOTH TRIP.

B. RCDT cooling valve IC-V-20 OPENS.

C. Pressurizer level control valve MU-V-17 OPENS.

D. Loop A Subcooling Margin Meter indication INCREASES.

Technical Reference ARP MAP G-1-7, PORV Open (Acoustic), Rev. 8, Pages 1 & 2.
ARP LWDS-1-4, R. C. Drain Tnk. Press. Hi, Rev. 10, Page 1.

Open Exam Reference

Learning Objective IV.A.01.08 State the following concerning the PORV:
a. Setpoints both high and low pressure.
b. NDT switch operation and interlocks.
c. Indication available to the operator to determine PORV position.
d. Function/Purpose of the PORV.

Question Source ☑ New ☐ TMI Bank TMI Question #
☐ Modified TMI Bank Parent Question #

Question History ☐ Used in Last Two TMI NRC Exams Exam Date
☐ Used in Audit Exam ☐ Used in Training Program Quiz Date

Question Cognitive Level ☐ Memory or Fundamental Knowledge
☑ Comprehension or Analysis

10 CFR Part 55 Content ☑ 55.41 .10 ☑ 55.43 .2 ☑ 55.45 ,6

Discriminant Validity Statements

A Plausible misconception that RCPs would automatically trip due to the low temperature signal. There IS a fourth pump STARTING interlock affected by this signal failure.

B Correct answer.

C Plausible misconception that Pressurizer level would decrease.

D Plausible misconception that T-cold is used to compute SCM, rather than T-hot.

Comments None.

Form ES-401-6

Written Exam Question Worksheet

Q # 063

Examination Outline Cross-Reference

					RO	SRO
KA #	SYSTEM 011 K6.03	Page	3.2-22	Tier #	2	
RO/SRO Importance Rating	2.9	3.3		Group #	2	

Measurement Knowledge of the effect of a loss or malfunction on the relationship between PZR level and PZR heater control circuit: pressurizer level instrument failure effect on heater cut-off interlock.

Proposed Question ☑ RO ☑ SRO **Correct Answer** B

Identify the Pressurizer level setpoint for Pressurizer heater automatic cutout.

A. 100"

B. 80"

C. 66"

D. 20"

Technical Reference EP 1202-29, Pressurizer System Failure, Rev. 54, Page 11.

Open Exam Reference

Learning Objective IV.A.01.06 Describe how RCS pressurizer pressure is maintained to include:
a. Heaters and their setpoints.

Question Source ☑ New ☐ TMI Bank TMI Question #
☐ Modified TMI Bank Parent Question #

Question History ☐ Used in Last Two TMI NRC Exams Exam Date
☐ Used in Audit Exam ☐ Used in Training Program Quiz Date

Question Cognitive Level ☑ Memory or Fundamental Knowledge
☐ Comprehension or Analysis

10 CFR Part 55 Content ☑ 55.41 .7 ☐ 55.43 ☑ 55.45 .7

Discriminant Validity Statements

A Plausible as this is level control setpoint following reactor trip.

B Correct answer.

C Plausible as this is level when heaters become uncovered.

D Plausible as this level at which HPI must be initiated after reactor trip.

Comments None.

Form ES-401-6

Written Exam Question Worksheet

Q # 064

Examination Outline Cross-Reference

RO SRO

KA # SYSTEM 012 K1.03 Page 3.7-2 Tier # 2

RO/SRO Importance Rating 3.7 3.8 Group # 2

Measurement Knowledge of the physical connections and/or cause-effect relationships between the RPS and CRDS: RPS-CRD interface.

Proposed Question ☑ RO ☑ SRO **Correct Answer** A

Plant conditions:
- Reactor power is 100%.
- B RPS Channel is in MANUAL BYPASS for monthly surveillance testing.
- The following ICS stations are in HAND for CRD breaker testing:
  - SG/Rx Master.
  - Reactor Demand.
  - Both FW Loop Masters.
  - Diamond Rod Control Panel.
- CRD Breaker #11 is now open.

From the list below, identify the ONE (1) event that, if occurring under these conditions, would result in an automatic reactor trip.

A. Inverter 1C failure.

B. Inverter 1D failure.

C. A-RPS channel trip.

D. C-RPS channel trip.

Technical Reference ARP MAP G-1-1, Reactor Trip, Rev. 12, Pages 1 & 2.
ARP MAP G-1-2, RPS Channel Trip, Rev. 10, Page 1.
ARP MAP A-1-6, Inverter Failed, Rev. 13, Page 1.

Open Exam Reference

Learning Objective IV.E.14.07 Given a set of plant conditions and RPS status, determine what trip(s) if any should occur.

Question Source ☑ New ☐ TMI Bank TMI Question #
☐ Modified TMI Bank Parent Question #

Question History ☐ Used in Last Two TMI NRC Exams Exam Date
☐ Used in Audit Exam ☐ Used in Training Program Quiz Date

Question Cognitive Level ☐ Memory or Fundamental Knowledge
☑ Comprehension or Analysis

10 CFR Part 55 Content ☑ 55.41 .2 to .9 ☐ 55.43 ☑ 55.45 .7 to .8

Discriminant Validity Statements

A Correct answer because loss of VBC will cause breakers CB1 & CB2 to trip.

B Plausible because loss of VBD will cause breakers CB3 & CB4, but all primary CRD power is still available.

C Plausible because of possible misconception that A RPS channel trip will cause breaker #10 to trip.

D Plausible because of possible misconception that C RPS channel trip will cause breakers CB1 & CB2 to trip.

Comments None.

Form ES-401-6

Written Exam Question Worksheet

Q # 065

Examination Outline Cross-Reference

					RO	SRO
KA #	SYSTEM 014 A1.02	Page	3.1-22	Tier #	2	
RO/SRO Importance Rating	3.2	3.6		Group #	2	

Measurement Ability to predict and/or monitor changes in parameters (to prevent exceeding design limits) associated with operating the RPIS controls, including control rod position indication on control room panels: actions for exceeding rod insertion limits.

Proposed Question ☑ RO ☑ SRO **Correct Answer** B

Initial plant conditions:
- Reactor power was 100%.
- 100 EFPD.

Sequence of events:
- (Time = 1800) #1 Seal for RC-P-1D failed.
- (Time = 1830) Power reduced to 60% AND RCP-1D was tripped.

Current plant conditions:
- RCS Average Temperature 579 degrees F.
- APSRs are at 30% withdrawn.
- Imbalance is -10% and within acceptable limits.
- Group 7 control rods are 8% BELOW the Rod Insertion Limit in the RESTRICTED OPERATING REGION for the current power and RCP combination.

From the list below, identify the ONE (1) statement that describes required operator actions to attain acceptable control rod position AND maintain plant parameters within normal ranges.

A. Drive APSRs IN.

B. Borate to drive Group 7 control rods out.

C. Reduce power to 50% by Group 7 control rod insertion.

D. Initially dilute RCS boron then borate to follow the Xenon transient.

Technical Reference OP 1102-4, Power Operation, Rev. 84, Page 8.

Open Exam Reference

Learning Objective V.B.04.02 Describe what action must be taken to move the control rods back within the operating band if they are below the insertion limits per OP 1102-4.

Question Source ☑ New ☐ TMI Bank TMI Question #
☐ Modified TMI Bank Parent Question #

Question History ☐ Used in Last Two TMI NRC Exams Exam Date
☐ Used in Audit Exam ☐ Used in Training Program Quiz Date

Question Cognitive Level ☐ Memory or Fundamental Knowledge
☑ Comprehension or Analysis

10 CFR Part 55 Content ☑ 55.41 .5 ☑ 55.43 .5 ☑ 55.45 .3, .13

Discriminant Validity Statements

A Plausible if plant response to APSR manipulation is misunderstood.

B Correct answer.

C Plausible since RIL decreases as power decreases.

D Plausible since this will maintain plant parameters during the Xenon transient.

Comments None.

Form ES-401-6

Written Exam Question Worksheet

Q # 066

Examination Outline Cross-Reference

					RO	SRO
KA #	SYSTEM 016 K4.03	Page	3.7-10	Tier #	2	
RO/SRO Importance Rating	2.8	2.9		Group #	2	

Measurement Knowledge of NNIS design feature(s) and/or interlock(s) which provide input to control systems.

Proposed Question ☑ RO ☑ SRO **Correct Answer** D

Initial plant conditions:
- Reactor power is 100%.
- ICS is in FULL AUTOMATIC.

RCS Loop A flow is slowly failing low and a SASS Mismatch alarm occurs but there is NO SASS actuation. Total RCS Flow signal to ICS is normal.

From the list below, identify the ONE (1) set of ICS Hand/Auto Stations that is required to be transferred to hand to mitigate the consequence of this event.

A. A Feedwater Pump AND A Startup & Main Feedwater Valves.

B. A & B Feedwater Loop Masters.

C. A & B Main AND Startup Feedwater Valves.

D. A & B Feedwater Pumps AND A & B Main & Startup Feedwater Valves.

Technical Reference ICS Print D553731, Feedwater Control Analog Logic, Rev. Q.

Open Exam Reference

Learning Objective IV.E.27.60 Given a set of plant conditions, determine the correct ICS response and any actions that must be taken if the ICS response is incorrect.

Question Source ☑ New ☐ TMI Bank TMI Question #
☐ Modified TMI Bank Parent Question #

Question History ☐ Used in Last Two TMI NRC Exams Exam Date
☐ Used in Audit Exam ☐ Used in Training Program Quiz Date

Question Cognitive Level ☐ Memory or Fundamental Knowledge
☑ Comprehension or Analysis

10 CFR Part 55 Content ☑ 55.41 .7 ☐ 55.43 ☐ 55.45

Discriminant Validity Statements

A Plausible misconception since the failure is an 'A' input to ICS.

B Plausible misconception that Feedwater Loop Masters would eliminate the bad signal.

C Plausible misconception that controlling the feedwater valves would mitigate the event.

D Correct answer.

Comments None.

Form ES-401-6

Written Exam Question Worksheet

Q # 067

Examination Outline Cross-Reference

					RO	SRO
KA #	SYSTEM 026 A4.01	Page	3.5-13	Tier #	2	
RO/SRO Importance Rating	4.5	4.3		Group #	2	

Measurement Ability to manually operate and/or monitor Containment Spray System (CSS) controls in the control room: manual operation of the RB Spray system.

Proposed Question ☑ RO ☑ SRO **Correct Answer** B

Sequence of events:
- Reactor trip.
- Large Break LOCA.
- ESAS Actuations:
  - 1600 psig RCS pressure.
  - 4 psig RB pressure.
- Current RB pressure is 20 psig.
- 1600 psi ES has been bypassed and 4 psi ES actuation has been placed in defeat.
- No ES component positions have been changed.
- The leak in the RCS gets larger resulting in RB pressure rising to 35 psig.

From the list below, identify the status of the Reactor Building Spray pumps under these conditions.

A. Will automatically start.

B. Must be manually started using the BS pump extension control switch.

C. Must be started by pushing the manual ES 30 psi actuation pushbuttons.

D. Must be secured since their suction and discharge valves are closed.

Technical Reference OPM Section B-09, Reactor Building Spray, Rev. 4, Page 5.

Open Exam Reference

Learning Objective IV.A.15.11 Describe the Reactor Building Spray system response to:
a. 4 psig RB pressure signal
b. 30 psig RB pressure signal
c. Manual initiation

Question Source ☑ New ☐ TMI Bank TMI Question #
☐ Modified TMI Bank Parent Question #

Question History ☐ Used in Last Two TMI NRC Exams Exam Date
☐ Used in Audit Exam ☐ Used in Training Program Quiz Date

Question Cognitive Level ☐ Memory or Fundamental Knowledge
☑ Comprehension or Analysis

10 CFR Part 55 Content ☑ 55.41 .7 ☐ 55.43 ☑ 55.45 .5 to .8

Discriminant Validity Statements

A Plausible since RB pressure at 30 psi does start the BS pumps if block 4 is loaded

B Correct answer.

C Plausible misconception on the affect of pushing the 30 psi ES manual pushbutton

D Plausible misconception that the BS spray valves are closed

Comments None.

Form ES-401-6

Written Exam Question Worksheet

Q # 068

Examination Outline Cross-Reference

					RO	SRO
KA #	SYSTEM 029 K4.03	Page	3.8-6	Tier #	2	
RO/SRO Importance Rating	3.2	3.5		Group #	2	

Measurement Knowledge of design feature(s) and/or interlock(s) which provide automatic purge isolation.

Proposed Question ☑ RO ☑ SRO **Correct Answer** A

From the list below, identify the ONE (1) condition that will cause Reactor Building Purge valve, AH-V-1A, to close.

A. Reactor Trip Isolation.

B. 1600 psig ESAS Actuation.

C. RM-A-2, RB Radiation Monitor, in HIGH Alarm.

D. RM-G-6, RB Main Fuel Handling Bridge, in HIGH Alarm.

Technical Reference OP 1105-3, Safeguards Actuation System, Rev. 40, Page 19.

Open Exam Reference

Learning Objective IV.E.24.06 State or identify those components which are effected by the following ESAS signals:
f. RTI (Reactor trip isolation)

Question Source ☑ New ☐ TMI Bank TMI Question #
☐ Modified TMI Bank Parent Question #

Question History ☐ Used in Last Two TMI NRC Exams Exam Date
☐ Used in Audit Exam ☐ Used in Training Program Quiz Date

Question Cognitive Level ☑ Memory or Fundamental Knowledge
☐ Comprehension or Analysis

10 CFR Part 55 Content ☑ 55.41 .7 ☐ 55.43 ☑ 55.45 .6

Discriminant Validity Statements

A Correct answer.

B Plausible if ESAS signals which isolate the RB are misunderstood.

C Plausible since this is a high rad condition in the RB.

D Plausible since this is a high rad condition in the RB.

Comments None.

Form ES-401-6

Written Exam Question Worksheet

Q # 069

Examination Outline Cross-Reference

					RO	SRO
KA #	SYSTEM 033 A3.02	Page	3.8-10	Tier #	2	
RO/SRO Importance Rating	2.9	3.1		Group #	2	

Measurement Ability to monitor automatic operation of the Spent Fuel Pool Cooling System including spent fuel leak or rupture.

Proposed Question ☑ RO ☑ SRO **Correct Answer** C

Plant conditions:
- Reactor power is 100%.
- SF-P-1A Spent Fuel Cooling Pump is operating in recirc mode.
- SF-P-2 Borated Water Recirc Pump is operating for Pool A (LWDS) cleanup.
- Spent fuel assembly rack location change in progress in Spent Fuel Pool A.

Due to equipment failure, the spent fuel assembly is dropped – lying on top of the fuel racks in Pool A. Fuel pin clad rupture has resulted in significant activity release to the spent fuel pool water.

Identify the ONE (1) statement below that describes plant design response to RM-L-5 indication pegs high due to the increase in radioactivity described above.

A. SF-P-2 trips.

B. SF-P-1A trips.

C. MAP C-1-1 RADIATION LEVEL HIGH actuates.

D. MAP C-1-1 RADIATION LEVEL HIGH actuates AND Fuel Handling Building Supply Fan, AH-E-10, trips.

Technical Reference ARP MAP C-1-1, Radiation Level Hi, Rev. 20, Page 53.

Open Exam Reference

Learning Objective IV.E.06.04 Given an RMS channel, state the interlocks associated with a channel in the Radiation Monitoring system.

Question Source ☑ New ☐ TMI Bank TMI Question #
☐ Modified TMI Bank Parent Question #

Question History ☐ Used in Last Two TMI NRC Exams Exam Date
☐ Used in Audit Exam ☐ Used in Training Program Quiz Date

Question Cognitive Level ☑ Memory or Fundamental Knowledge
☐ Comprehension or Analysis

10 CFR Part 55 Content ☑ 55.41 .7 ☐ 55.43 ☑ 55.45 .5

Discriminant Validity Statements

A Plausible misconception that LWDS cleanup flow should be automatically terminated to minimize plant personnel radiation exposures due to contamination of LWDS cation demineralizer resins.

B Plausible misconception that liquid flow out of the spent fuel pool should be terminated to limit curie transport out of the spent fuel pool in order to minimize plant personnel radiation exposures.

C Correct answer.

D Plausible misconception that air flow out of the spent fuel handling area should be minimized to reduce plant personnel radiation exposures.

Comments None.

Form ES-401-6

Written Exam Question Worksheet

Q # 070

Examination Outline Cross-Reference

					RO	SRO
KA #	SYSTEM 035 A1.01	Page	3.4-16	Tier #	2	
RO/SRO Importance Rating	3.6	3.8		Group #	2	

Measurement Ability to predict and/or monitor changes in parameters (to prevent exceeding design limits) associated with operating the S/GS controls including S/G wide and narrow range level during startup, shutdown, and normal operations: OTSG low level limit control during SU/SD - RCP trip.

Proposed Question ☑ RO ☑ SRO **Correct Answer** A

Sequence of events:
- Reactor power was reduced to 70%.
- RC-P-1A was manually tripped.
- Delta T-C is currently 0 degrees F.

Plant shutdown is now in progress.

From the list below, identify the ONE (1) statement that describes how long Delta T-C will be controlled at 0 degrees F during the plant shutdown, considering the events and conditions described above.

A. Until OTSG 1A reaches Low Level Limits.

B. Until OTSG 1B reaches Low Level Limits.

C. Until both OTSG 1A AND OTSG 1B reach Low Level Limits.

D. Until both OTSG 1A AND OTSG 1B reach High Level Limits.

Technical Reference ICS Print D553731, Feedwater Control Analog Logic, Rev. Q.
ICS Print D553733, Steam Generator - Feedwater Control Digital Logic, Rev. R.

Open Exam Reference

Learning Objective IV.E.27.60 Given a set of plant conditions, determine the correct ICS response and any actions that must be taken if the ICS response is incorrect.

Question Source ☑ New ☐ TMI Bank TMI Question #
☐ Modified TMI Bank Parent Question #

Question History ☐ Used in Last Two TMI NRC Exams Exam Date
☐ Used in Audit Exam ☐ Used in Training Program Quiz Date

Question Cognitive Level ☐ Memory or Fundamental Knowledge
☑ Comprehension or Analysis

10 CFR Part 55 Content ☑ 55.41 .5 ☐ 55.43 ☑ 55.45 .5

Discriminant Validity Statements

A Correct answer.

B Plausible misconception on which OTSG reaches low level limits first.

C Plausible misconception that ICS will maintain Delta T-C at 0 F.

D Plausible misconception if both OTSG levels did increase.

Comments None.

Form ES-401-6

Written Exam Question Worksheet

Q # 071

Examination Outline Cross-Reference

					RO	SRO
KA #	SYSTEM 039 A4.04	Page	3.4-22	Tier #	2	
RO/SRO Importance Rating	3.8	3.9		Group #	2	

Measurement Ability to manually operate and/or monitor emergency feedwater pump turbines in the control room: EF-P-1 manual operation.

Proposed Question ☑ RO ☑ SRO **Correct Answer** A

MS-V-13A and MS-V-13B sequentially open on an EFW actuation signal. From the list below, identify the ONE (1) statement that describes the basis for this sequential valve operation.

A. Ensures that the pressure controller for MS-V-6 can control steam chest pressure of EF-P-1 during startup.

B. Ensures that MS-V-6 will not be pressure locked on its closed seat during the starting transient.

C. Ensures that high initial steam flow will not result in excessive RCS cooling.

D. Ensures that excessive EFW flow is not introduced to the OTSGs.

Technical Reference OPM Section I-01, Emergency Feedwater, Rev. 12, Page 12.

Open Exam Reference

Learning Objective IV.C.05.10 State and explain the purpose of MS-V-6. Describe the turbine driven EFW pump main steam overpressure protection.

Question Source ☑ New ☐ TMI Bank TMI Question #
☐ Modified TMI Bank Parent Question #

Question History ☐ Used in Last Two TMI NRC Exams Exam Date
☐ Used in Audit Exam ☐ Used in Training Program Quiz Date

Question Cognitive Level ☑ Memory or Fundamental Knowledge
☐ Comprehension or Analysis

10 CFR Part 55 Content ☑ 55.41 .7 ☐ 55.43 ☑ 55.45 .5 to .8

Discriminant Validity Statements

A Correct answer.

B Plausible if operation of MS-V-6 is misunderstood.

C Plausible since EF-P-1 is supplied from main steam.

D Plausible if operation of EF-P-1 is misunderstood.

Comments None.

Form ES-401-6

Written Exam Question Worksheet

Q # 072

Examination Outline Cross-Reference

					RO	SRO
KA #	SYSTEM 055 K1.06	Page	3.4-33	Tier #	2	
RO/SRO Importance Rating	2.6	2.6		Group #	2	

Measurement Knowledge of the physical connections and/or cause-effect relationships between the Condenser Air Removal System (CARS) and the Process Radiation Monitoring (PRM) System: Condenser off-gas/RMS relationship (low vacuum conditions).

Proposed Question ☑ RO ☑ SRO **Correct Answer** D

Plant conditions:
- Reactor tripped from 100% power.
- LOSS OF STATION POWER has occurred.
- Primary and secondary parameters are being maintained in the P-T Plot post trip stability windows.
- NO increase in RCS activity following trip.
- Mass balance calculations indicate the existence of 5 gpm RCS leakage.
- 1210-1 Immediate Actions are being performed.

Considering the conditions above, identify the ONE (1) instrument below that, if evaluated alone, would support a valid determination that OTSG tube leakage exists.

A. RM-A-2 (RB Atmospheric Monitor).

B. RM-A-5 (Condenser Off-Gas Monitor).

C. RM-G-25 (Condenser Off-Gas Monitor).

D. RM-G-26 (Main Steam Line Monitor).

Technical Reference 6610-PLN-4200.02, TMI Emergency Dose Calculation Manual (EDCM), Rev. 10, Page 51.

Open Exam Reference

Learning Objective V.E.11.02 Concerning the ATOG Symptom & OTSG Tube leakage condition:
- State the "Symptoms" in order of priority
- Explain the concerns associated with each symptom
- Describe the relative priority of the symptoms

Question Source ☑ New ☐ TMI Bank TMI Question #
☐ Modified TMI Bank Parent Question #

Question History ☐ Used in Last Two TMI NRC Exams Exam Date
☐ Used in Audit Exam ☐ Used in Training Program Quiz Date

Question Cognitive Level ☐ Memory or Fundamental Knowledge
☑ Comprehension or Analysis

10 CFR Part 55 Content ☑ 55.41 .2 to .9 ☐ 55.43 ☑ 55.45 .7 to .8

Discriminant Validity Statements

A Plausible misconception since this monitor would indicate the existence or absence of RCS leakage into the RB, but does not in itself exclude the existence of OTSG tube leakage.

B Plausible misconception because this monitor would indicate the existence of OTSG tube leakage -- in the presence of condenser off-gas flow.

C Plausible misconception because this monitor would indicate the existence of OTSG tube leakage -- in the presence of condenser off-gas flow.

D Correct answer because it monitors main steam line, not condenser off-gas activity.

Comments None.

Form ES-401-6

Written Exam Question Worksheet

Q # 073

Examination Outline Cross-Reference

					RO	SRO
KA #	SYSTEM 062 A4.02	Page	3.6-5	Tier #	2	
RO/SRO Importance Rating	2.5	2.8		Group #	2	

Measurement Ability to manually operate and/or monitor in the control room remote racking in and out of breakers: Control switch, breaker status lights while in test position.

Proposed Question ☑ RO ☑ SRO **Correct Answer** D

Use the attached copy of SS-208-138 to identify the ONE (1) condition, from the list below, when CONTROL ROOM 4 KV ES motor feeder breaker status lights (red/green) are (operable) capable of providing Control Room indication of breaker position.

A. BDD FULLY RACKED OUT position with BOTH close and trip fuses installed.

B. BDD in TEST (disconnected) position with BOTH close and trip fuses installed.

C. BDD RACKED IN (connected) position with close fuse installed - trip fuse removed.

D. BDD RACKED IN (connected) position with trip fuse installed - close fuse removed.

Technical Reference SS-208-138, Rev. 3.

Open Exam Reference SS-208-138, Rev. 3.

Learning Objective IV.G.04.04 Describe the mechanical interlocks associated with racking in and out 7KV, 4KV, and 480 VAC circuit breakers.

Question Source ☑ New ☐ TMI Bank TMI Question #
☐ Modified TMI Bank Parent Question #

Question History ☐ Used in Last Two TMI NRC Exams Exam Date
☐ Used in Audit Exam ☐ Used in Training Program Quiz Date

Question Cognitive Level ☐ Memory or Fundamental Knowledge
☑ Comprehension or Analysis

10 CFR Part 55 Content ☑ 55.41 .7 ☐ 55.43 ☑ 55.45 45.5 to .8

Discriminant Validity Statements

A Plausible misconception since both fuses are installed.

B Plausible misconception since both fuses are installed in the distracter.

C Plausible misconception since the close fuse is installed in the distracter - lights are on 30A trip fuse circuit only.

D Correct answer.

Comments Open Reference Justification: Distracters do not conform to AP 1002 guidance regarding fuse removal requirements during BDD rack in/rack out operations.

REFERENCES
SHEET 001 127 & -130

NOTE
1. CONTACT 2 & 2C FOR 69 SWITCH TYP AS SHOWN FOR THIS ELEMENTARY EXCEPT FOR BS-P-1A CONTACTS ARE REVERSED.
2. WHITE INDICATING LIGHT IS TYPICAL FOR ALL SWGR UNITS EXCEPT 1D10.

GPU Nuclear					
3	REVISED TO INCORP FCN-C106675				
REV	DRAFT	CHECK	APPROVED	DATE	APP
	SGM	WAC		12-27-78	
REVISION					

METROPOLITAN EDISON COMPANY
THREE MILE ISLAND NUCLEAR STATION UNIT #1
ELECTRICAL ELEMENTARY DIAGRAMS
4160V. SWITCHGEAR (E.S.)

MADE	RP
CHK'D	FB
BQ CF	GC
CF. DFN.	JWH
ENG.	8-17-70
REV. CH. APP DATE	

GILBERT ASSOCIATES, INC.
ENGINEERS AND CONSULTANTS
READING, PENNA.

WORK ORDER	SIZE	DRAWING	REV
4192		SS-208-138	3

TYPICAL L.S. BUS MOTOR FEEDER BREAKER INTERNAL DIAGRAM
(SHOWN IN CONNECTED POSITION)

CONTROLLED COPY

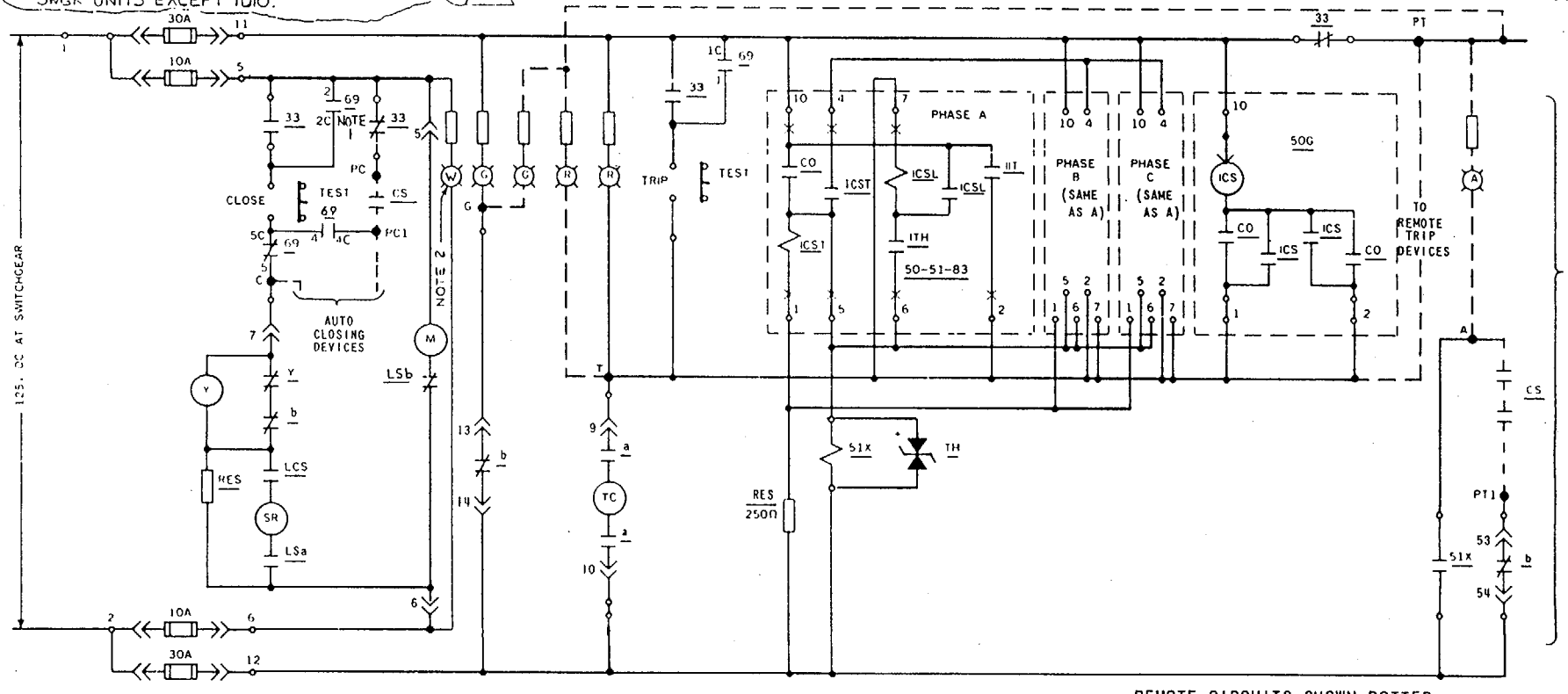

REMOTE CIRCUITS SHOWN DOTTED

33 - TRUCK OPERATED CELL SWITCH
51X - MOTOR OVERLOAD AUX RELAY W #MG-6
50-51-83 - W # COM-5 RELAYS } CONTINUED ON
50G - W # ITH RELAY } SS 208-130
CS - CONTACTOR SWITCH
SR - SPRING RELEASE COIL
ICSL - INDICATING CONTACTOR SWITCH
ICST - INDICATING CONTACTOR SWITCH

LSb - CUTS OFF MOTOR WHEN SPRING IS FULLY CHARGED
LSa - PERMITS CLOSING WHEN SPRING IS FULLY CHARGED
LCS - LATCH CHECK SWITCH
M - SPRING CHARGING MOTOR

GPU Nuclear					
2	REVISED TO INCORP FCN-C106719				
REV	DRAFT	CHECK	APPROVED	DATE	APP
	SGM	WAC		5-1-78	
REVISION					

CONSTRUCTION
BIDDING PURPOSES ONLY
RELEASED FOR
ENGR.
DATE

073

REFERENCES -
SHEET 001, 127, & -130

NOTE

1. CONTACT 2 & 2C FOR 69 SWITCH TYP AS SHOWN FOR THIS ELEMENTARY EXCEPT FOR BS-P-1A CONTACTS ARE REVERSED.
2. WHITE INDICATING LIGHT IS TYPICAL FOR ALL SWGR UNITS EXCEPT 1D10.

GPU Nuclear					
3	REVISED TO INCORP FCN-C106675				
REV	DRAFT	CHECK	APPROVED	DATE	APP
	SGM	WAC		12-27-78	
REVISION					

METROPOLITAN EDISON COMPANY
THREE MILE ISLAND NUCLEAR STATION UNIT #1
ELECTRICAL ELEMENTARY DIAGRAMS
4160V. SWITCHGEAR (E.S.)

MADE RP
CHK'D FB
SQ CF GC
CF. DFN. JWH
ENG. 8-17-70
REV. CH. APP DATE

GILBERT ASSOCIATES, INC.
ENGINEERS AND CONSULTANTS
READING, PENNA.

4192	SS-208-138	3
WORK ORDER	SIZE DRAWING	REV

CONTROLLED COPY

TYPICAL E.S. BUS MOTOR FEEDER BREAKER INTERNAL DIAGRAM
(SHOWN IN CONNECTED POSITION)

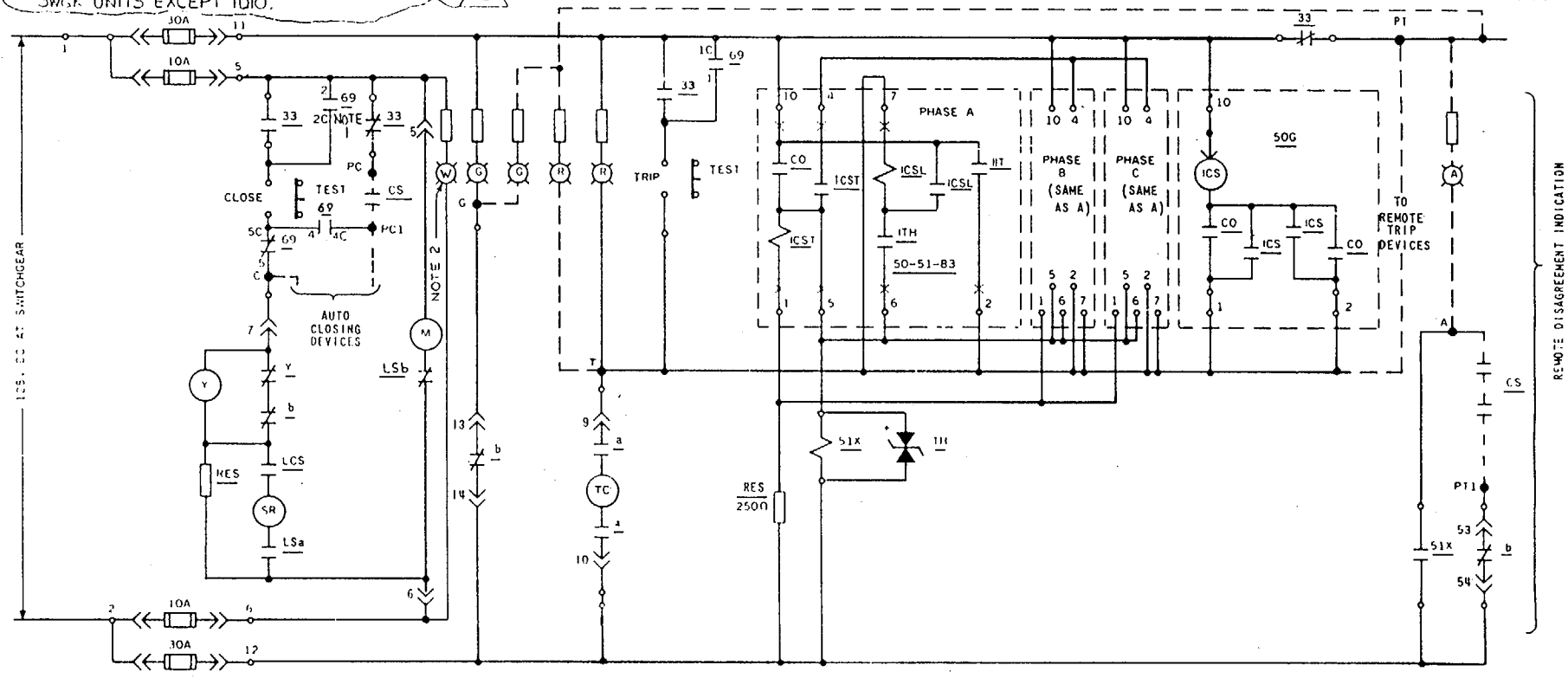

REMOTE CIRCUITS SHOWN DOTTED

33 - TRUCK OPERATED CELL SWITCH
51X MOTOR OVERLOAD AUX RELAY W #MG G
50-51-B3 - W # COM-5 RELAYS } CONTINUED ON
50G W # ITH RELAY } SS-208-130
CS CONTACTOR SWITCH
SR - SPRING RELEASE COIL
ICSL INDICATING CONTACTOR SWITCH
ICST INDICATING CONTACTOR SWITCH

LSb - CUTS OFF MOTOR WHEN SPRING IS FULLY CHARGED
LSa PERMITS CLOSING WHEN SPRING IS FULLY CHARGED
LCS LATCH CHECK SWITCH
M SPRING CHARGING MOTOR

GPU Nuclear					
2	REVISED TO INCORP FCN-C106719				
REV	DRAFT	CHECK	APPROVED	DATE	APP
	SGM	WAC		5-1-85	
REVISION					

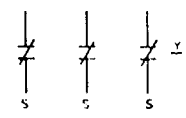

CONSTRUCTION
BIDDING PURPOSES ONLY
RELEASED FOR
ENGR.
DATE

Q73

REFERENCES -
SHEET 001, 127, & -130

NOTE
1. CONTACT 2 & 2C FOR 69 SWITCH TYP AS SHOWN FOR THIS ELEMENTARY EXCEPT FOR BS-P-1A CONTACTS ARE REVERSED.
2. WHITE INDICATING LIGHT IS TYPICAL FOR ALL SWGR UNITS EXCEPT 1D10. 3

GPU Nuclear					
3	REVISED TO INCORP FCN-C106675				
REV	DRAFT	CHECK	APPROVED	DATE	APP
	SGM	WHC		12-27-78	
REVISION					

METROPOLITAN EDISON COMPANY
THREE MILE ISLAND NUCLEAR STATION UNIT #1
ELECTRICAL ELEMENTARY DIAGRAMS
4160V. SWITCHGEAR (E.S.)

MADE	RP
CHK'D	FB
SQ CF	GC
CF DFN.	JWH
ENG.	8-17-70
REV. CH. APP DATE	

GILBERT ASSOCIATES, INC.
ENGINEERS AND CONSULTANTS
READING, PENNA.

WORK ORDER	SIZE	DRAWING	REV
4192		SS-208-138	3

TYPICAL E.S. BUS MOTOR FEEDER BREAKER INTERNAL DIAGRAM
(SHOWN IN CONNECTED POSITION)

CONTROLLED COPY

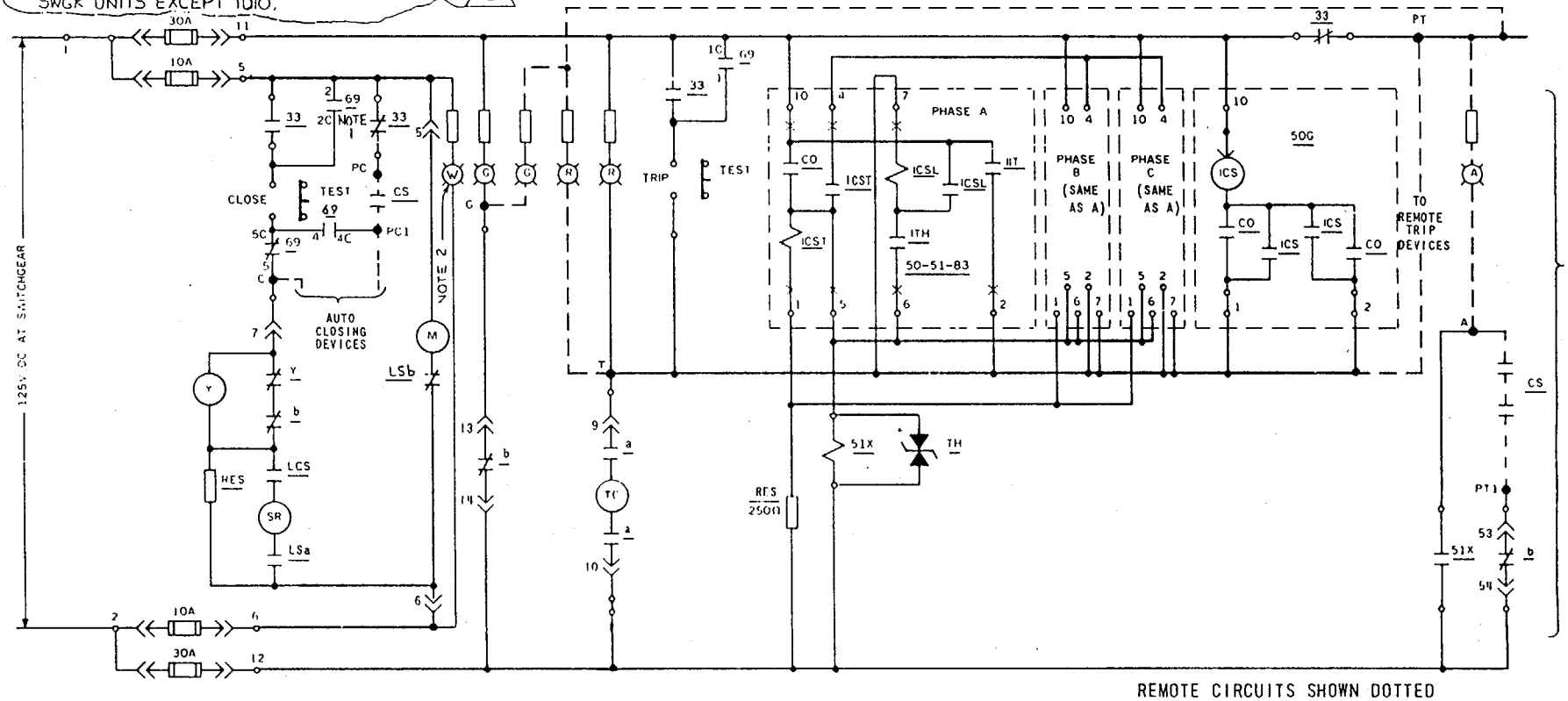

REMOTE CIRCUITS SHOWN DOTTED

33 - TRUCK OPERATED CELL SWITCH
51X - MOTOR OVERLOAD AUX RELAY W #MG-G
50-51-83 - W # COM-5 RELAYS } CONTINUED ON
50G - W # ITH RELAY } SS-208-130
CS - CONTACTOR SWITCH
SR - SPRING RELEASE COIL
ICSL - INDICATING CONTACTOR SWITCH
ICST - INDICATING CONTACTOR SWITCH

LSb - CUTS OFF MOTOR WHEN SPRING IS FULLY CHARGED
LSa - PERMITS CLOSING WHEN SPRING IS FULLY CHARGED
LCS - LATCH CHECK SWITCH
M - SPRING CHARGING MOTOR

GPU Nuclear					
2	REVISED TO INCORP FCN-C106719				
REV	DRAFT	CHECK	APPROVED	DATE	APP
	SGM	WHC		5-1-85	
REVISION					

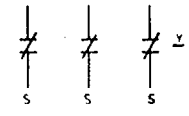

CONSTRUCTION
BIDDING PURPOSES ONLY
RELEASED FOR
ENGR.
DATE

REFERENCES:
SHEET 001, 127, & -130

NOTE
1. CONTACT 2 & 2C FOR 69 SWITCH TYP AS SHOWN FOR THIS ELEMENTARY EXCEPT FOR BS-P-1A CONTACTS ARE REVERSED.
2. WHITE INDICATING LIGHT IS TYPICAL FOR ALL SWGR UNITS EXCEPT 1D10.

3

GPU Nuclear

REV	DRAFT	CHECK	APPROVED	DATE	APP
3	SGM	WHC	[illegible]	12-27-78	

REVISION: REVISED TO INCORP FCN-C106675

METROPOLITAN EDISON COMPANY
THREE MILE ISLAND NUCLEAR STATION UNIT #1
ELECTRICAL ELEMENTARY DIAGRAMS
4160V. SWITCHGEAR (E.S.)

MADE RP
CHK'D FB
SO. CF. GC
CF DFN. JWH
ENG. [illegible] 8-17-70
REV. CH. APP DATE

GILBERT ASSOCIATES, INC.
ENGINEERS AND CONSULTANTS
READING, PENNA.

WORK ORDER	SIZE	DRAWING	REV
4192		SS-208-138	3

TYPICAL L.S. BUS MOTOR FEEDER BREAKER INTERNAL DIAGRAM
(SHOWN IN CONNECTED POSITION)

CONTROLLED COPY

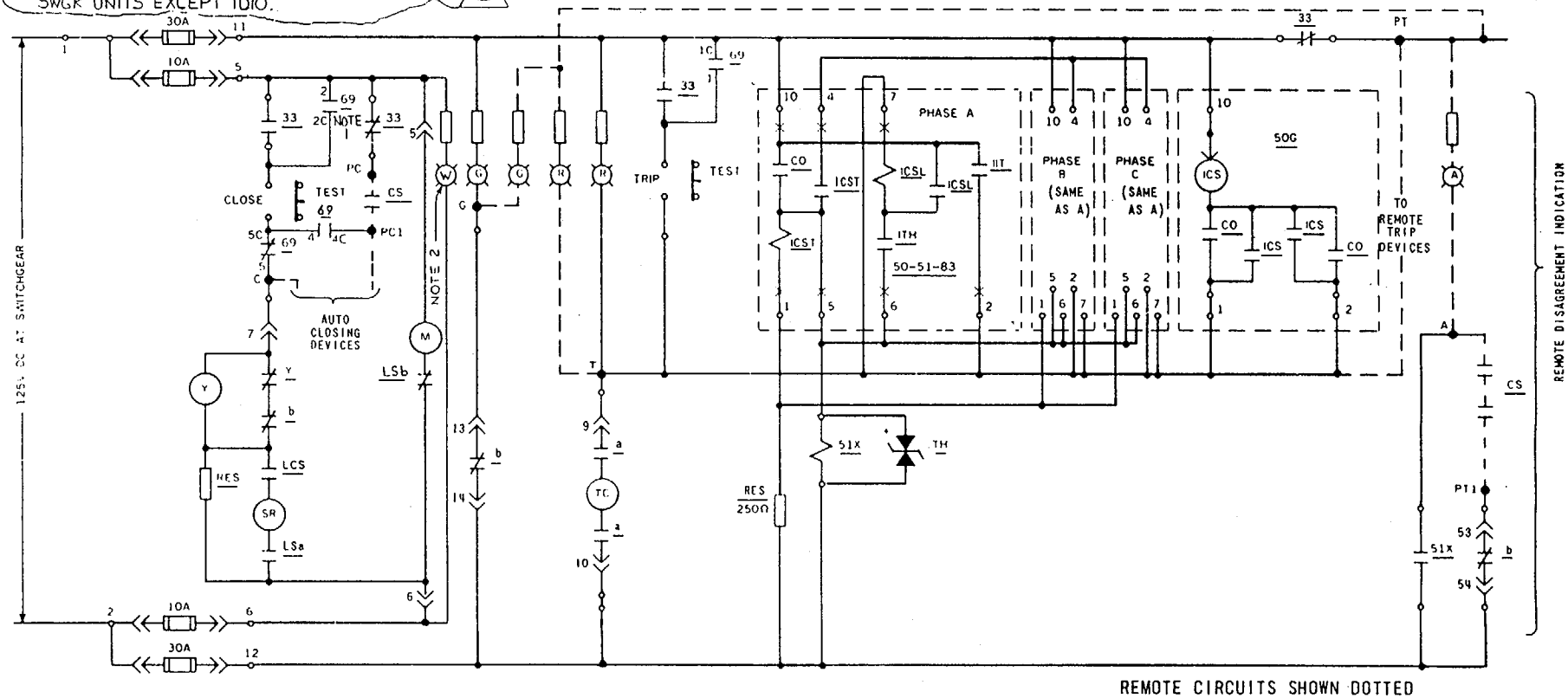

REMOTE CIRCUITS SHOWN DOTTED

33 - TRUCK OPERATED CELL SWITCH
51X - MOTOR OVERLOAD AUX RELAY W #MG-6
50-51-83 - W # COM-5 RELAYS } CONTINUED ON SS-208-130
50G - W # ITH RELAY
CS - CONTACTOR SWITCH
SR - SPRING RELEASE COIL
ICSL - INDICATING CONTACTOR SWITCH
ICST - INDICATING CONTACTOR SWITCH
LSb - CUTS OFF MOTOR WHEN SPRING IS FULLY CHARGED.
LSa - PERMITS CLOSING WHEN SPRING IS FULLY CHARGED
LCS - LATCH CHECK SWITCH
M - SPRING CHARGING MOTOR

GPU Nuclear

REV	DRAFT	CHECK	APPROVED	DATE	APP
2	SGM	WHC	[illegible]	5-1-85	

REVISION: REVISED TO INCORP FCN-C106719

CONSTRUCTION
BIDDING PURPOSES ONLY
RELEASED FOR
ENGR.
DATE

REFERENCES
SHEET 001, 127, & -130

NOTE
1. CONTACT 2 & 2C FOR 69 SWITCH TYP AS SHOWN FOR THIS ELEMENTARY EXCEPT FOR BS-P-1A CONTACTS ARE REVERSED
2. WHITE INDICATING LIGHT IS TYPICAL FOR ALL SWGR UNITS EXCEPT 1D10.

GPU Nuclear					
3	REVISED TO INCORP FCN-C106675				
REV	DRAFT	CHECK	APPROVED	DATE	APP
	SGM	WHC		12278	
REVISION					

METROPOLITAN EDISON COMPANY
THREE MILE ISLAND NUCLEAR STATION UNIT #1
ELECTRICAL ELEMENTARY DIAGRAMS
4160V. SWITCHGEAR (E.S.)

MADE RP
CHK'D FB
SQ CF GC
CF DFN. JWH
ENG 8-17-70
REV. CH APP DATE

GILBERT ASSOCIATES, INC.
ENGINEERS AND CONSULTANTS
READING, PENNA.

WORK ORDER	SIZE	DRAWING	REV
4192	A	SS-208-138	3

TYPICAL E.S. BUS MOTOR FEEDER BREAKER INTERNAL DIAGRAM
(SHOWN IN CONNECTED POSITION)

CONTROLLED COPY

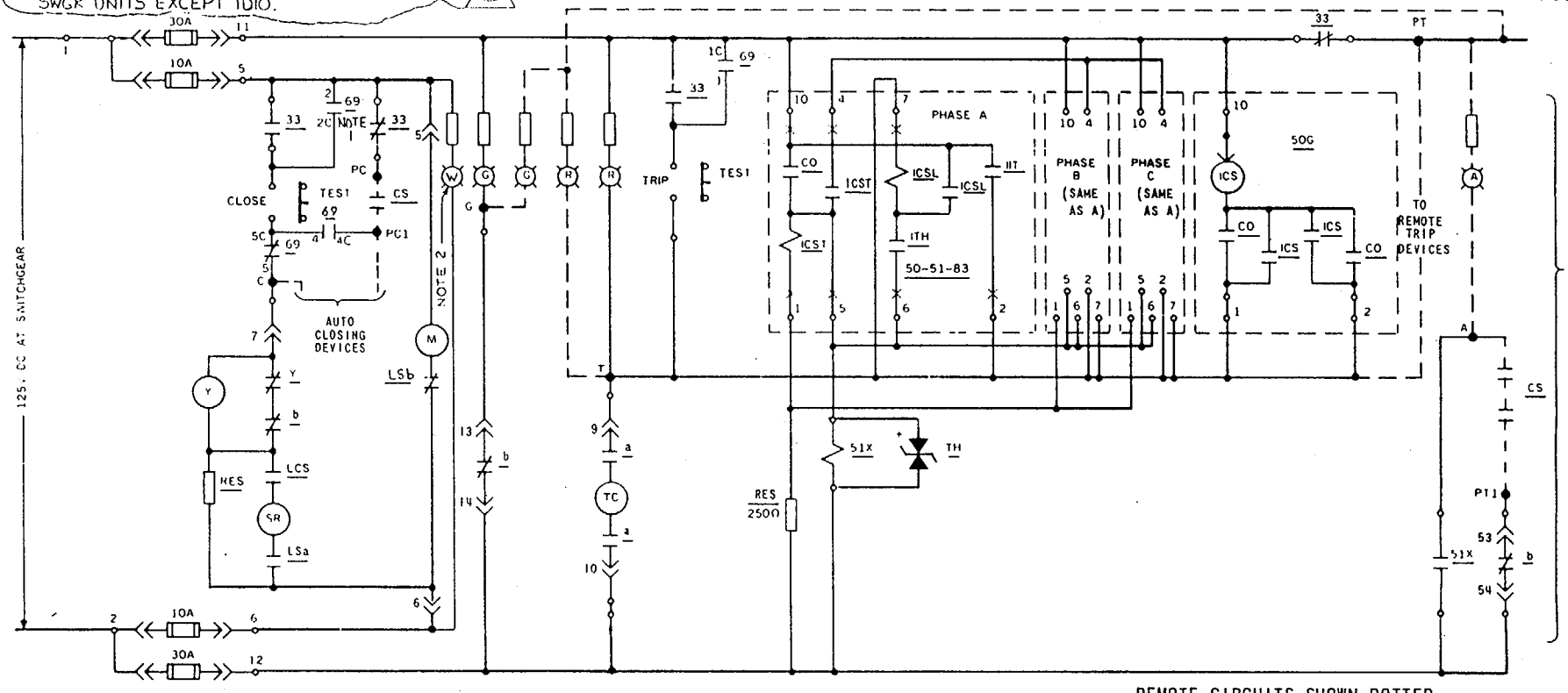

REMOTE CIRCUITS SHOWN DOTTED

33 - TRUCK OPERATED CELL SWITCH
51X - MOTOR OVERLOAD AUX RELAY W #MG 6
50-51-83 - W # COM-5 RELAYS } CONTINUED ON
50G - W # ITH RELAY } SS-208-130
CS - CONTACTOR SWITCH
SR - SPRING RELEASE COIL
ICSL - INDICATING CONTACTOR SWITCH
ICST - INDICATING CONTACTOR SWITCH

LSb - CUTS OFF MOTOR WHEN SPRING IS FULLY CHARGED
LSa - PERMITS CLOSING WHEN SPRING IS FULLY CHARGED
LCS - LATCH CHECK SWITCH
M - SPRING CHARGING MOTOR

GPU Nuclear					
2	REVISED TO INCORP FCN-C106719				
REV	DRAFT	CHECK	APPROVED	DATE	APP
	SGM	WHC		5-1-85	
REVISION					

CONSTRUCTION
BIDDING PURPOSES ONLY
RELEASED FOR
ENGR.
DATE

Form ES-401-6

Written Exam Question Worksheet

Q # 074

Examination Outline Cross-Reference

			RO	SRO
KA # SYSTEM 063 K4.01	Page 3.6-6	Tier #	2	
RO/SRO Importance Rating 2.7	3	Group #	2	

Measurement Knowledge of DC electrical system design feature(s) and/or interlock(s) which provide for manual/automatic transfers of control: 1M DC Bus automatic transfer interlocks.

Proposed Question ☑ RO ☑ SRO **Correct Answer** C

From the list below, identify the ONE (1) statement that describes the status of the power transfer scheme for 1M DC Distribution Panel following a RCS 1600 psig ES actuation.

A. Automatic transfer is blocked but the manual transfer is operable.

B. Manual transfer is blocked but the automatic transfer is operable.

C. Automatic AND manual transfer is blocked.

D. Manual AND automatic transfer is operable.

Technical Reference SS-209-050, Rev. 3.

Open Exam Reference

Learning Objective IV.E.24.09 Describe or compare the sequence of events that take place given the following conditions:

a. ESAS signal followed by an undervoltage condition
b. Undervoltage condition followed by an ESAS signal
c. ESAS signal & undervoltage condition simultaneously

Include in your description or comparison the effects on:

a. Block loading, diesel generator operation, ES and non ES equipment response, 27/86 lockout relays, auto transfer of ICES valves and DC bus 1M.

Question Source ☑ New ☐ TMI Bank TMI Question #
☐ Modified TMI Bank Parent Question #

Question History ☐ Used in Last Two TMI NRC Exams Exam Date
☐ Used in Audit Exam ☐ Used in Training Program Quiz Date

Question Cognitive Level ☑ Memory or Fundamental Knowledge
☐ Comprehension or Analysis

10 CFR Part 55 Content ☑ 55.41 .7 ☐ 55.43 ☐ 55.45

Discriminant Validity Statements

A Plausible misconception on auto transfer capabilities vs. manual transfer capabilities with an ES signal.

B Plausible misconception on auto transfer capabilities vs. manual transfer capabilities with an ES signal.

C Correct answer.

D Plausible misconception on auto transfer capabilities vs. manual transfer capabilities with an ES signal.

Comments None.

Form ES-401-6

Written Exam Question Worksheet

Q # 075

Examination Outline Cross-Reference

					RO	SRO
KA #	2.1.30	Page	2-4	Tier #	2	
RO/SRO Importance Rating	3.9	3.4		Group #	2	

Measurement Ability to locate and operate components, including local controls: operate EDG.

Proposed Question ☑ RO ☑ SRO **Correct Answer** C

Plant conditions:
- Loss of Station Power has occurred.
- EG-Y-1B diesel had to be started manually from the Control Room using the Manual Start Pushbutton.
- EG-Y-1B generator Ready to Load light is DE-ENERGIZED.

All other Control Room controls associated with EG-Y-1B were in the normal STANDBY line-up when the diesel was started.

From the list below, identify the ONE (1) action that would ENERGIZE the Ready to Load light under these conditions.

A. Place the 1A and 1B Aux Transformer supply breakers to the 1E 4160V bus in PTL.

B. Adjust the manual voltage controller on CR to obtain an output voltage of 4.1 KV.

C. Adjust the local voltage regulator to obtain an output voltage of 4.1KV.

D. Energize the synchroscope for EG-Y-1B generator output breaker, G11-02.

Technical Reference OP 1107-3, Diesel Generator, Rev. 90, Page 22.

Open Exam Reference

Learning Objective IV.G.08.05 List the normal operating parameters on Control Room indications for the Emergency Diesel Generators, and the action required if these parameters are not in allowable band.

Question Source ☑ New ☐ TMI Bank TMI Question #
☐ Modified TMI Bank Parent Question #

Question History ☐ Used in Last Two TMI NRC Exams Exam Date
☐ Used in Audit Exam ☐ Used in Training Program Quiz Date

Question Cognitive Level ☑ Memory or Fundamental Knowledge
☐ Comprehension or Analysis

10 CFR Part 55 Content ☑ 55.41 .7 ☐ 55.43 ☑ 55.45 .7

Discriminant Validity Statements

A Plausible since the breakers need to be opened for auto closure of the EDG output breaker.

B Plausible since this would adjust voltage if the VR was in Manual.

C Correct answer.

D Plausible since this interlock allows the EDG output breaker to be paralleled to an energized bus.

Comments None.

Form ES-401-6 **Written Exam Question Worksheet** Q # 076

Examination Outline Cross-Reference RO SRO

KA # SYSTEM 073 A4.02 Page 3.7-16 Tier # 2

RO/SRO Importance Rating 3.7 3.7 Group # 2

Measurement Ability to manually operate and/or monitor radiation monitoring system control panel in the control room: manually operate/back-up RMS auto interlocks.

Proposed Question ☑ RO ☑ SRO **Correct Answer** D

Plant Conditions:
- Reactor power is 100%.
- Liquid Release is in progress from A WECST.
- IWTS release is in progress.

A high alarm is received from RM-L-6 Radioactive Waste Water Discharge Monitor, however RM-L6 Enable/Defeat switch is in Defeat.

From the list below, identify the ONE (1) statement that describes required operator action(s) for this condition.

A. Close IW-V-73, IWTS Effluent valve on the Control Room LWDS panel.

B. Close WDL-V-257, Liquid Release Effluent Valve, on the Control Room LWDS panel.

C. Place RM-L6 to Enable AND verify IW-V-73, IWTS Effluent valve, closes.

D. Place RM-L6 to Enable AND verify WDL-V-257, Liquid Release Effluent Valve, closes.

Technical Reference EP 1202-12, Excessive Radiation Levels, Rev. 45, Pages 9 & 13.

Open Exam Reference

Learning Objective IV.B.09.04 Describe how to perform an authorized release of a W.E.C.S.T. to the effluent of the MDCT. Include all interlocks and automatic protection associated with discharges to the environment.

Question Source ☑ New ☐ TMI Bank TMI Question #
☐ Modified TMI Bank Parent Question #

Question History ☐ Used in Last Two TMI NRC Exams Exam Date
☐ Used in Audit Exam ☐ Used in Training Program Quiz Date

Question Cognitive Level ☑ Memory or Fundamental Knowledge
☐ Comprehension or Analysis

10 CFR Part 55 Content ☑ 55.41 .7 ☐ 55.43 ☑ 55.45 .5 to .8

Discriminant Validity Statements

A Plausible since IW-V-73 closes on high radiation but from RM-L12 but is not operable from LWDS panel.

B Plausible since WDL-V-257 closes on high radiation from RM-L6 but is not operable from LWDS panel.

C Plausible since taking RM-L-6 to Enable would activate the interlock but does not close IW-V-7.

D Correct answer.

Comments None.

Form ES-401-6

Written Exam Question Worksheet

Q # 077

Examination Outline Cross-Reference

					RO	SRO
KA #	SYSTEM 075 A2.02	Page	3.8-16	Tier #	2	
RO/SRO Importance Rating	2.5	2.7		Group #	2	

Measurement Ability to predict impacts of loss of circulating water pumps on the circulating water system, and (b) based on those predictions, use procedures to correct, control or mitigate the consequences of those malfunctions or operations: auto/manual actions for loss of CW/low vacuum.

Proposed Question ☑ RO ☑ SRO **Correct Answer** D

Current plant conditions:
- Reactor is operating at 100% power.
- Main Generator output = 870 MW.
- 6 CW Pumps are operating.
- Winter weather conditions (outside air temperature is 20 degrees F).

Considering these conditions, and in the absence of any automatic turbine or reactor trip, identify the ONE (1) situation below that would require the CRO to initiate a MANUAL TURBINE TRIP.

A. Loss of one CW Pump.

B. Loss of the Gland Steam Exhauster.

C. Condenser pressure is 7.7 inches Hg absolute.

D. Condenser pressure is 8.7 inches Hg absolute.

Technical Reference ARP MAP N-1-6, Mn Cond Vacuum Lo, Rev. 15, Pages 1 & 2.

Open Exam Reference

Learning Objective IV.D.04.12 Describe operator actions in response to decreasing main or auxiliary condenser vacuum.

Question Source ☐ New ☐ TMI Bank TMI Question #
☐ Modified TMI Bank Parent Question #

Question History ☑ Used in Last Two TMI NRC Exams Exam Date 1998 TMI SRO
☐ Used in Audit Exam ☐ Used in Training Program Quiz Date

Question Cognitive Level ☑ Memory or Fundamental Knowledge
☐ Comprehension or Analysis

10 CFR Part 55 Content ☑ 55.41 .5 ☑ 55.43 .5 ☑ 55.45 .3, .13

Discriminant Validity Statements

A Plausible distracter considering summer time operations. Question stem establishes winter conditions, when we often run with 4 pumps.

B Plausible distracter due to connections with Turbine Gland Seal system.

C Plausible misconception that setpoint is 7.5 inches rather than 8.5 inches Hg Absolute (power level dependent).

D Correct answer. Automatic setpoint is 8.5 inches Hg Absolute if >75% power, 7.5 inches Hg Absolute if <75% power.

Comments 1998 TMI SRO Exam Question 69.

Form ES-401-6

Written Exam Question Worksheet

Q # 078

Examination Outline Cross-Reference

					RO	SRO
KA #	SYSTEM 079 K4.01	Page	3.8-21	Tier #	2	
RO/SRO Importance Rating	2.9	3.2		Group #	2	

Measurement Knowledge of Station Air System (SAS) design feature(s) and/or interlock(s) which provide cross-connect with the Instrument Air System (IAs): Service Air to Instrument Air Cross-tie.

Proposed Question ☑ RO ☑ SRO **Correct Answer** B

From the list below, identify the ONE (1) value that correctly completes the following statement regarding operation of IA-V-1, Service Air to Instrument Air Backup, during a loss of Instrument Air:

IA-V-1 starts to open when Primary Instrument Air pressure drops below _____ .

A. 90 psig.

B. 80 psig.

C. 70 psig.

D. 60 psig.

Technical Reference OPM Section M-02, Instrument & Control Air System, Rev. 18, Page 17.

Open Exam Reference

Learning Objective V.D.17.03 Given a list of symptoms, identify the event, determine what Immediate Automatic Actions will occur and what Immediate Manual Actions are required IAW EP 1202-36.

Question Source ☑ New ☐ TMI Bank TMI Question #
☐ Modified TMI Bank Parent Question #

Question History ☐ Used in Last Two TMI NRC Exams Exam Date
☐ Used in Audit Exam ☐ Used in Training Program Quiz Date

Question Cognitive Level ☑ Memory or Fundamental Knowledge
☐ Comprehension or Analysis

10 CFR Part 55 Content ☑ 55.41 .7 ☐ 55.43 ☐ 55.45

Discriminant Validity Statements

A Plausible if operation of IA-V-1 is misunderstood (setpoint for IA-P-1A/B when in LEAD).

B Correct answer.

C Plausible if operation of IA-V-1 is misunderstood (setpoint for supplying BUIA to IA).

D Plausible if operation of IA-V-1 is misunderstood (setpoint for IA-V-26).

Comments None.

Form ES-401-6

Written Exam Question Worksheet

Q # 079

Examination Outline Cross-Reference

					RO	SRO
KA #	SYSTEM 086 K3.01	Page	3.8-23	Tier #	2	
RO/SRO Importance Rating	2.7	3.2		Group #	2	

Measurement Knowledge of the affect that a loss or malfunction of the FPS will have on shutdown capability with redundant equipment.

Proposed Question ☑ RO ☑ SRO **Correct Answer** B

Plant conditions:
- Reactor tripped.
- Fire Protection System failed to extinguish a fire in the Relay Room.
- EP 1202-37, Cooldown Outside the Control Room, immediate actions complete.
- All REMOTE TRANSFER SWITCHES have been selected to EMERGENCY.
- SS has established control of the plant at the Remote Shutdown Area.

If RC-V-1 (automatically) opens due to a high impedance fault, identify the ONE (1) statement below that describes use of redundant equipment to isolate Pressurizer spray flow, considering current plant conditions.

A. Close RC-V-1 at the Remote Shutdown Panel.

B. Close the Pressurizer spray block valve, RC-V-3, at the Remote Shutdown Panel.

C. Close RC-V-1, using the keyswitch located on the front of the RC-V-1 breaker at the 480 VAC motor control center.

D. Close RC-V-3, using the keyswitch located on the front of the RC-V-3 breaker at the 480 VAC motor control center.

Technical Reference EP 1202-37, Cooldown from Outside the Control Room, Rev. 52, Pages 3, 4, 8 & 11. Training Lesson Plan 11.2.01.262, Remote Shutdown, Rev. 8, Pages 23 & 24.

Open Exam Reference

Learning Objective V.D.18.05 Given a component identified in the follow up actions of EP 1202-37, Cooldown from Outside the Control Room, explain how that component is operated and monitored from outside the control room.

Question Source ☑ New ☐ TMI Bank TMI Question #
☐ Modified TMI Bank Parent Question #

Question History ☐ Used in Last Two TMI NRC Exams Exam Date
☐ Used in Audit Exam ☐ Used in Training Program Quiz Date

Question Cognitive Level ☑ Memory or Fundamental Knowledge
☐ Comprehension or Analysis

10 CFR Part 55 Content ☑ 55.41 .7 ☐ 55.43 ☑ 55.45 .6

Discriminant Validity Statements

A Plausible misconception that RC-V-1 can be controlled from this location.

B Correct answer.

C Plausible misconception that RC-V-1 can be controlled from this location. This switch, in fact, does not exist.

D Plausible misconception that RC-V-3 can be controlled from this location. This switch, in fact, does not exist.

Comments None.

Form ES-401-6 **Written Exam Question Worksheet** Q # 080

Examination Outline Cross-Reference RO SRO

KA # SYSTEM 005 A2.04 Page 3.4-13 Tier # 2

RO/SRO Importance Rating 2.9 2.9 Group # 3

Measurement Ability to (a) predict the impacts of RHR valve malfunction or operations on the RHRS, and (b) based on these predictions, use procedures to correct, control, or mitigate the consequences of those malfunctions or operations: DH-V failure.

Proposed Question ☑ RO ☑ SRO **Correct Answer** D

Plant conditions:
- Reactor is at cold shutdown condition.
- Decay Heat Removal Train A is operating.
- Decay Heat Closed Cooling flow through the Decay Heat Removal cooler is throttled to maintain the RCS at 130° F.
- Total loss of Instrument Air (0 psig) occurred.

From the list below, identify the ONE (1) statement that describes the response of the cooling system and subsequent effect on RCS temperature for this situation.

A. Closure of DC-V-65A (Cooler bypass) AND DC-V-2A (Cooler inlet) results in RCS heatup.

B. Opening of DC-V-65A (Cooler bypass) AND DC-V-2A (Cooler inlet) results in RCS cooldown.

C. Closure of DC-V-2A (Cooler inlet) results in RCS heatup.

D. Opening of DC-V-2A (Cooler inlet) results in RCS cooldown.

Technical Reference EP 1202-36, Loss of Instrument Air, Rev. 29, Pages 6 and 8.

Open Exam Reference

Learning Objective IV.B.01.13 Describe the Decay Closed Cooling Water system response to a loss of instrument air.

Question Source ☐ New ☐ TMI Bank TMI Question #
☐ Modified TMI Bank Parent Question #

Question History ☑ Used in Last Two TMI NRC Exams Exam Date 1998 TMI SRO
☐ Used in Audit Exam ☐ Used in Training Program Quiz Date

Question Cognitive Level ☐ Memory or Fundamental Knowledge
☑ Comprehension or Analysis

10 CFR Part 55 Content ☑ 55.41 .5 ☑ 55.43 .5 ☑ 55.45 .3, .13

Discriminant Validity Statements

A Plausible distracter since closure of both valves (incorrect response for loss of Instrument Air) will result in loss of cooling and therefore RCS heatup.

B Plausible distracter since opening both valves (incorrect response for loss of Instrument Air) could possibly result in RCS cooldown.

C Plausible distracter since closure of DC-V-2A (incorrect response for loss of Instrument Air) would result in RCS heatup.

D Correct answer.

Comments 1998 TMI SRO Exam Question 32.

Form ES-401-6 **Written Exam Question Worksheet** Q # 081

Examination Outline Cross-Reference RO SRO

KA # SYSTEM 008 K4.09 Page 3.8-3 Tier # 2

RO/SRO Importance Rating 2.7 2.9 Group # 3

Measurement Knowledge of Component Cooling Water System (CCWS) design feature(s) and/or interlock(s) which provide the standby feature of the CCW pumps: IC-P-1A/1B standby pump automatic start interlocks.

Proposed Question ☑ RO ☑ SRO **Correct Answer** D

Plant conditions:
- Reactor power is 100%.
- IC-P-1A is operating.
- IC-P-1B is in Normal-After-Stop.

From the list below, identify the ONE (1) plant situation that will result in IC-P-1B starting, with no operator action.

A. Intermediate Closed flow to the CRDMs drops below 100 gpm.

B. IC Cooler Outlet temperature goes above 160 degrees F.

C. Loss of Nuclear Services River Water.

D. RB pressure exceeds 30 psig.

Technical Reference OPM Section B-10, Intermediate Closed Cooling Water System, Rev. 8, Page 9.

Open Exam Reference

Learning Objective IV.B.03.05, IV.B.03.06 Describe the Intermediate Closed Cooling Water system interlocks associated with the following:
2) ICCW total system flow
Describe the effects of an ESAS actuation (both with and without undervoltage conditions) on the Intermediate Closed Cooling Water system.

Question Source ☑ New ☐ TMI Bank TMI Question #
☐ Modified TMI Bank Parent Question #

Question History ☐ Used in Last Two TMI NRC Exams Exam Date
☐ Used in Audit Exam ☐ Used in Training Program Quiz Date

Question Cognitive Level ☐ Memory or Fundamental Knowledge
☑ Comprehension or Analysis

10 CFR Part 55 Content ☑ 55.41 .7 ☐ 55.43 ☐ 55.45

Discriminant Validity Statements

A Plausible since this is a flow interlock to reset CRD breakers #10 and #11.

B Plausible since this is an interlock associated with the IC system and the MU system.

C Plausible since starting a second IC pump is a follow up manual action for a loss of IC cooling.

D Correct answer - automatic valve closures due to 30# line break isolation actuation result in less than 550 gpm total flow (automatic pump starting interlock).

Comments None.

Form ES-401-6

Written Exam Question Worksheet

Q # 082

Examination Outline Cross-Reference

RO SRO

KA # SYSTEM 027 A4.02 Page 3.5-15 Tier # 2

RO/SRO Importance Rating 2.8 3 Group # 3

Measurement Ability to manually operate and/or monitor remote operation of the Containment Iodine Removal System (CIRS) in the control room and handling of iodine filters: kidney filter operation.

Proposed Question ☑ RO ☑ SRO **Correct Answer** B

Identify the parameter associated with the Reactor Building Kidney Filter System that can be monitored from the CONTROL ROOM. (Exclude alarm indications.)

A. Charcoal Filter flow rate.

B. Charcoal Filter temperature.

C. Charcoal Filter differential pressure.

D. Fan AH-E-101 running indication light.

Technical Reference ARP HVB-6-9, Rx Bldg Kidney Filter Trouble (Hi Temp), Rev. 8, Page 1.

Open Exam Reference

Learning Objective IV.D.37.11 Describe the fire protection provided for the Reactor Building Kidney Filter System including:
a. Water source
b. Pressure source
c. Initiation setpoints

Question Source ☑ New ☐ TMI Bank TMI Question #
☐ Modified TMI Bank Parent Question #

Question History ☐ Used in Last Two TMI NRC Exams Exam Date
☐ Used in Audit Exam ☐ Used in Training Program Quiz Date

Question Cognitive Level ☑ Memory or Fundamental Knowledge
☐ Comprehension or Analysis

10 CFR Part 55 Content ☑ 55.41 .7 ☐ 55.43 ☑ 55.45 45.5 to 45

Discriminant Validity Statements

A Plausible since a flow switch provides an alarm for low flow conditions.

B Correct answer.

C Plausible since indication is provided at the local control panel.

D Plausible since indication is provided at the local control panel.

Comments None.

Form ES-401-6

Written Exam Question Worksheet

Q # 083

Examination Outline Cross-Reference

					RO	SRO
KA #	SYSTEM 034 A1.02	Page	3.8-13	Tier #	2	
RO/SRO Importance Rating	2.9	3.7		Group #	3	

Measurement Ability to predict and/or monitor changes in parameters (to prevent exceeding design limits) associated with operating the Fuel Handling System controls, including water level in the refueling canal: FH actions for refueling canal low level.

Proposed Question ☑ RO ☑ SRO **Correct Answer** D

A fuel assembly has just been lifted from the up ender and is transitioning to the core to be placed in core position H-8. The assembly is currently 2 feet away from the up ender when spent fuel pool level is observed do be dropping at 10 inches per minute.

From the list below, identify the ONE (1) statement that describes the procedurally required disposition of the fuel assembly.

A. Placed in core position H-8.

B. Placed in the nearest available core location.

C. Placed in the up ender to be returned to the Spent Fuel Pool.

D. Lowered between the plenum and the up ender until it just touches the floor.

Technical Reference AbP 1203-43, Transfer Canal Seal Plate Gasket Failure/Level Loss, Rev. 6, Page 2.

Open Exam Reference

Learning Objective V.C.16.02 State the required Immediate Manual Actions for a failure of the fuel transfer canal seal plate per AP 1203-43.

Question Source ☑ New ☐ TMI Bank TMI Question #
☐ Modified TMI Bank Parent Question #

Question History ☐ Used in Last Two TMI NRC Exams Exam Date
☐ Used in Audit Exam ☐ Used in Training Program Quiz Date

Question Cognitive Level ☑ Memory or Fundamental Knowledge
☐ Comprehension or Analysis

10 CFR Part 55 Content ☑ 55.41 .5 ☐ 55.43 ☑ 55.45 .5

Discriminant Validity Statements

A Plausible since this is where the assembly belongs.

B Plausible since this is an immediate action if the assembly is closer to the core.

C Plausible since the Spent Fuel Pool is an alternate storage location.

D Correct answer.

Comments None.

Form ES-401-6

Written Exam Question Worksheet

Q # 084

Examination Outline Cross-Reference

					RO	SRO
KA #	SYSTEM 041 A4.06	Page	3.4-25	Tier #	2	
RO/SRO Importance Rating	2.9	3		Group #	3	

Measurement Ability to manual operate and/or monitor atmospheric relief valve controllers in the control room: Steam Dump System/Turbine Bypass Control - manual Atmospheric Dump Valve control.

Proposed Question ☑ RO ☑ SRO **Correct Answer** C

Plant conditions:
- Reactor power is 100%.
- All ICS Stations in Auto EXCEPT Turbine Bypass Valves, which are in HAND.

Identify the ONE (1) plant condition that automatically transfers the Atmospheric Dump Valve Control to the ICS Hand/Auto Control Station.

A. Loss of ICS Auto Power.

B. Loss of ICS Hand Power.

C. Loss of Condenser Vacuum.

D. OTSG pressure at 1040 psi or greater.

Technical Reference OP 1105-4, Integrated Control System, Rev. 60, Page 44.

Open Exam Reference

Learning Objective IV.C.01.05 Explain the operation of the atmospheric dump valves (MS-V-4 A/B), including controls, setpoints and relief capacity.

Question Source ☑ New ☐ TMI Bank TMI Question #
☐ Modified TMI Bank Parent Question #

Question History ☐ Used in Last Two TMI NRC Exams Exam Date
☐ Used in Audit Exam ☐ Used in Training Program Quiz Date

Question Cognitive Level ☑ Memory or Fundamental Knowledge
☐ Comprehension or Analysis

10 CFR Part 55 Content ☑ 55.41 .7 ☐ 55.43 ☑ 55.45 .5 to .8

Discriminant Validity Statements

A Plausible since on loss of ICS auto control transfers to the manual backup loaders in the control room.

B Plausible misconception on affects of loss of ICS Hand Power.

C Correct answer.

D Plausible misconception on the purpose and operation of the 1040 psi circuit.

Comments None.

Form ES-401-6

Written Exam Question Worksheet

Q # 085

Examination Outline Cross-Reference

RO SRO

KA # SYSTEM 045 K4.47 Page 3.4-29 Tier # 2

RO/SRO Importance Rating 4 4.3 Group # 3

Measurement Knowledge of the MT/G system design feature(s) and/or interlock(s) which provide for turbine trip upon reactor trip: source of main turbine-generator trip signal from reactor trip.

Proposed Question ☑ RO ☑ SRO **Correct Answer** D

From the list below, identify the ONE (1) signal used to automatically trip the Main Turbine when the reactor trips.

A. RPS channel trip relays.

B. RPS channel under-voltage coil status.

C. Control Rod Groups 1 through 7 In-Limit relays.

D. Reactor trip confirm relay from CRD breaker positions.

Technical Reference ARP MAP G-1-1, Reactor Trip, Rev. 12, Pages 1 & 2.

Open Exam Reference

Learning Objective IV.E.03.08 Given a specific main turbine trip, explain its operation including control signal(s) monitored, setpoint(s) for actuation and any applicable logic to cause the actuation.

Question Source ☑ New ☐ TMI Bank TMI Question #

☐ Modified TMI Bank Parent Question #

Question History ☐ Used in Last Two TMI NRC Exams Exam Date

☐ Used in Audit Exam ☐ Used in Training Program Quiz Date

Question Cognitive Level ☑ Memory or Fundamental Knowledge

☐ Comprehension or Analysis

10 CFR Part 55 Content ☑ 55.41 .7 ☐ 55.43 ☐ 55.45

Discriminant Validity Statements

A Plausible because used for 2-out-of-4 trip logic to CRD breakers.

B Plausible because used to actually trip CRD breakers and used for RTI relays.

C Plausible because these relays provide input to reactor reset logic.

D Correct answer.

Comments None.

Form ES-401-6

Written Exam Question Worksheet

Q # 086

Examination Outline Cross-Reference

					RO	SRO
KA #	SYSTEM 076 A1.02	Page	3.4-50	Tier #	2	
RO/SRO Importance Rating	2.6	2.6		Group #	3	

Measurement Ability to predict and/or monitor changes in parameters (to prevent exceeding design limits) associated with operating the SWS controls, including reactor and turbine building closed cooling water temperatures: Loss of RW system effects on SCCW temperatures.

Proposed Question ☑ RO ☑ SRO **Correct Answer** B

Identify the ONE (1) AUTOMATIC action that could occur as a result of increasing Secondary Services Closed Cooling system temperature due to loss of the Secondary River Water pumps.

A. Main Turbine trip due to high turbine bearing lube oil temperature.

B. Main Turbine-Generator runback on high stator cooling temperature.

C. Main Generator breaker(s) trip on high Bus Duct Cooling air temperature.

D. Main Feedwater Pump(s) trip on high pump bearing lube oil temperature.

Technical Reference AbP 1203-21, SSCC System Failure, Rev. 14, Page 2.

Open Exam Reference

Learning Objective IV.D.28.13 Describe the automatic and manual actions occurring on a loss of stator cooling.

Question Source ☑ New ☐ TMI Bank TMI Question #
☐ Modified TMI Bank Parent Question #

Question History ☐ Used in Last Two TMI NRC Exams Exam Date
☐ Used in Audit Exam ☐ Used in Training Program Quiz Date

Question Cognitive Level ☐ Memory or Fundamental Knowledge
☑ Comprehension or Analysis

10 CFR Part 55 Content ☑ 55.41 .5 ☐ 55.43 ☑ 55.45 .5

Discriminant Validity Statements

A Plausible because this condition will result but no automatic trip.

B Correct answer.

C Plausible because this condition will result but no automatic trip.

D Plausible because this condition will result but no automatic trip.

Comments None.

Form ES-401-6

Written Exam Question Worksheet

Q # 087

Examination Outline Cross-Reference

					RO	SRO
KA #	Instrument Air EP 2.4.4	Page	2-11	Tier #	2	
RO/SRO Importance Rating	4	0		Group #	3	

Measurement Ability to recognize abnormal indications for system operating parameters which are entry-level conditions for emergency and abnormal operating procedures: containment systems - use symptoms to ID required entry to Loss of Instrument Air EP.

Proposed Question ☑ RO ☑ SRO **Correct Answer** A

Plant conditions:
- Reactor power is 100%.
- EF-P-1 has automatically started.
- RCP seal injection valve MU-V-20 and seal return valve MU-V-26 have closed.
- Reactor Building penetration temperatures are increasing.

From the list below, identify the ONE (1) cause for these conditions.

A. Loss of Instrument Air.

B. Emergency Safeguards Blocks 1 through 4 have actuated.

C. HSPS Channels 1 through 4 have actuated.

D. 30 psig RB Pressure Isolation has actuated.

Technical Reference EP 1202-36, Loss of Instrument Air, Rev. 29, Pages 2 & 10.

Open Exam Reference

Learning Objective V.D.17.03 Given a list of symptoms, identify the event, determine what Immediate Automatic Actions will occur and what Immediate Manual Actions are required IAW EP 1202-36.

Question Source ☐ New ☐ TMI Bank TMI Question #
☐ Modified TMI Bank Parent Question #

Question History ☑ Used in Last Two TMI NRC Exams Exam Date 1995 TMI RO
☐ Used in Audit Exam ☐ Used in Training Program Quiz Date

Question Cognitive Level ☐ Memory or Fundamental Knowledge
☑ Comprehension or Analysis

10 CFR Part 55 Content ☑ 55.41 .10 ☑ 55.43 .2 ☑ 55.45 .4

Discriminant Validity Statements

A Correct answer.

B Plausible misconception regarding ESAS interlocks.

C Plausible misconception regarding HSPS interlocks.

D Plausible misconception regarding 30# ESAS interlocks.

Comments 1995 TMI RO Exam Question 63.

Form ES-401-6

Written Exam Question Worksheet

Q # 088

Examination Outline Cross-Reference

					RO	SRO
KA #	Conduct of Operations 2.1.29	Page	2-4	Tier #	3	
RO/SRO Importance Rating	3.4	3.3		Group #	1	

Measurement Knowledge of how to conduct and verify valve lineups: performance of valve lineup - independent verification of valve position.

Proposed Question ☑ RO ☑ SRO **Correct Answer** C

From the list below, identify the ONE (1) statement that describes the requirements for performing an Independent Verification for an open valve (located in a HIGH RADIATION AREA) that is required to be closed.

A. One individual closes the valve, SECOND individual verifies from an independent remote position DEMAND indicator that the valve closed.

B. One individual closes the valve, SAME individual independently uses a remote position DEMAND indicator to verify valve is closed.

C. One individual closes valve, SECOND individual independently verifies the valve is closed locally.

D. One individual closes valve locally, SAME individual verifies from an independent remote POSITION indicator that the valve is closed.

Technical Reference AP 1067, Independent Verification Program, Rev. 28, Page 5.

Open Exam Reference

Learning Objective V.J.01.02 State how valve position must be verified for valves without remote position indication/ and state when valve position may be verified by remote indication - according to AP 1067 Independent Verification.

Question Source ☐ New ☐ TMI Bank TMI Question #
☐ Modified TMI Bank Parent Question #

Question History ☑ Used in Last Two TMI NRC Exams Exam Date 1998 TMI SRO
☐ Used in Audit Exam ☐ Used in Training Program Quiz Date

Question Cognitive Level ☑ Memory or Fundamental Knowledge
☐ Comprehension or Analysis

10 CFR Part 55 Content ☑ 55.41 .10 ☐ 55.43 ☑ 55.45 .1, .12

Discriminant Validity Statements

A Plausible distracter since two individuals are used but includes misconception that use of DEMAND indication is an acceptable means of verification.

B Plausible distracter since this provides two independent means of position verification (misconception that use of DEMAND indication is acceptable) is employed – even though performed by the same individual.

C Correct answer.

D Plausible distracter since this provides two valid independent means of position verification (misconception that this is acceptable even though performed by the same individual).

Comments 1998 TMI SRO Exam Question 33.

Form ES-401-6

Written Exam Question Worksheet

Q # 089

Examination Outline Cross-Reference

RO SRO

KA # Conduct of Operations 2.1.2 Page 2-1 Tier # 3

RO/SRO Importance Rating 3 4 Group # 1

Measurement Knowledge of operator responsibilities during all modes of plant operation: CRO is responsible to trip reactor if ....

Proposed Question ☑ RO ☑ SRO **Correct Answer** B

From the list below, identify the ONE (1) plant condition that would require the operator to IMMEDIATELY initiate a MANUAL REACTOR TRIP.

A. 15% power, Pressurizer level decreasing from 120 inches at 3 inches/minute.

B. 60% power, loss of 1A 6900 V Bus.

C. 75% power, confirmed OTSG 1B tube leak rate = 60 gpm.

D. 100% power, verified INADVERTANT ESAS actuation, with HPI flow initiated to the RCS.

Technical Reference TS Table 2.3-1, Page 2-10, Amendment 184.
ATP 1210-1, Reactor Trip, Rev. 40, Page 2.

Open Exam Reference

Learning Objective V.A.10.10 Identify the steps which should be taken when an incident or abnormal condition is discovered which places the plant or personnel in an unsafe condition, per AP 1029.

Question Source ☑ New ☐ TMI Bank TMI Question #
☐ Modified TMI Bank Parent Question #

Question History ☐ Used in Last Two TMI NRC Exams Exam Date 1998 TMI SRO
☐ Used in Audit Exam ☐ Used in Training Program Quiz Date

Question Cognitive Level ☐ Memory or Fundamental Knowledge
☑ Comprehension or Analysis

10 CFR Part 55 Content ☑ 55.41 .10 ☐ 55.43 ☑ 55.45 .13

Discriminant Validity Statements

A Plausible distracter since this condition requires a manual trip if power is greater than 25%.

B Correct answer - loss of this bus trips two (2) RCPs (RPS trip should occur if >55% power.

C Plausible distracter since this condition requires plant shutdown.

D Plausible misconception of procedural requirements for an inadvertent ESAS actuation with HPI flow to the RCS.

Comments Modified question from 1998 ANO RO Exam.

Form ES-401-6

Written Exam Question Worksheet

Q # 090

Examination Outline Cross-Reference

RO SRO

KA # Conduct of Operations 2.1.1 Page 2-1 Tier # 3

RO/SRO Importance Rating 3.7 3.8 Group # 2

Measurement Knowledge of conduct of operations: AP 1029 question.

Proposed Question ☑ RO ☑ SRO **Correct Answer** D

You are the only licensed person in the Control room. From the list below, identify the ONE (1) condition that is permissible for you to be the SOLE NRC LICENSED PERSON IN THE CONTROL ROOM.

A. Reactor power is 100% power;
There is one additional CRO (NOT LICENSED) in the Control Room.

B. Plant is in Hot Shutdown condition;
The Shift Technical Advisor (NOT LICENSED) is in the Control Room.

C. RCS temperature is 210 degrees F;
The SS (LICENSED) is in the Shift Supervisor Office.

D. RCS temperature is 189 degrees F;
The SS (LICENSED) is in the Operations Office Building.

Technical Reference AP 1029, Conduct of Operations, Rev. 71, Page 20.

Open Exam Reference

Learning Objective V.A.10.08 Identify or state the shift manning requirements as described in AP 1029.

Question Source ☐ New ☐ TMI Bank TMI Question #
☐ Modified TMI Bank Parent Question #

Question History ☑ Used in Last Two TMI NRC Exams Exam Date 1995 TMI RO
☐ Used in Audit Exam ☐ Used in Training Program Quiz Date

Question Cognitive Level ☑ Memory or Fundamental Knowledge
☐ Comprehension or Analysis

10 CFR Part 55 Content ☑ 55.41 .10 ☐ 55.43 ☑ 55.45 .13

Discriminant Validity Statements

A Plausible misconception that requirement is for other licensed personnel to be ON SITE rather than IN THE CONTROL ROOM.

B Plausible misconception since reactor is shutdown, at least 1% subcritical by Tech Spec definition of Hot Shutdown.

C Plausible misconception since plant is shutdown and cold, and licensed SS can observe the Control Room through the glass window.

D Correct answer.

Comments 1995 TMI RO EXAM Question 18.

Form ES-401-6

Written Exam Question Worksheet

Q # 091

Examination Outline Cross-Reference

					RO	SRO
KA #	Conduct of Operations 2.1.25	Page	2-3	Tier #	3	
RO/SRO Importance Rating	2.8	3.1		Group #	1	

Measurement Ability to obtain and interpret station reference materials such as graphs, monographs, and tables which contain performance data: given plant operational data (generator hydrogen pressure and VARs), interpret graph to determine Main Generator MW load limit.

Proposed Question ☑ RO ☑ SRO **Correct Answer** C

Plant conditions:
- Maximum Generation Emergency declared.
- Reactor power is 100%.
- Generator MVAR loading is 460 MVARS OUT.
- Main Generator Hydrogen pressure is 60 psig.

Refer to the attached Figure B-2B from OP 1106-1. From the list of values provided below, identify the MAXIMUM GENERATOR MEGAWATT OUTPUT CAPABILITY for these conditions.

A. 0 MW.

B. 600 MW.

C. 800 MW.

D. 870 MW.

Technical Reference OP 1106-1, Turbine Generator, Rev. 94, Figure B-2B (Rev. 94), Page 59.

Open Exam Reference OP 1106-1, Turbine Generator, Rev. 94, Figure B-2B (Rev. 94), Page 59.

Learning Objective IV.C.09.20 Explain the relationship between main generator H2 pressure and allowable generator electrical load.

Question Source ☐ New ☐ TMI Bank TMI Question #
☑ Modified TMI Bank Parent Question # QR4C09-20-Q01

Question History ☐ Used in Last Two TMI NRC Exams Exam Date
☐ Used in Audit Exam ☐ Used in Training Program Quiz Date

Question Cognitive Level ☐ Memory or Fundamental Knowledge
☑ Comprehension or Analysis

10 CFR Part 55 Content ☑ 55.41 .10 ☑ 55.43 .5 ☑ 55.45 .5, .12

Discriminant Validity Statements

A This is the correct answer for -460 MVARS.

B This is the correct answer using the wrong (45 psig) curve.

C Correct answer.

D This is rated load for the unit.

Comments Parent question was not used during program quizzes nor Audit Exam.

CONTROLLED COPY D-91

GPU NUCLEAR	TMI Operating Procedure	Number 1106-1
Title: **Turbine Generator**		Revision No. 94
Applicability/Scope: TMI Division	Responsible Office: Plant Operations Dir.	Effective Date: 11/04/99

This document is within QA plan scope [X] Yes [ ] No

Safety Reviews Required [X] Yes [ ] No

TRAINING DEPT.

List of Effective Pages

Page	Revision	Page	Revision	Page	Revision	Page	Revision
1	94	21	94	41	94	61	94
2	94	22	94	42	94	62	94
3	94	23	94	43	94	63	94
4	94	24	94	44	94	64	94
5	94	25	94	45	94	65	94
6	94	26	94	46	94	66	94
7	94	27	94	47	94	67	94
8	94	28	94	48	94	68	94
9	94	29	94	49	94	69	94
10	94	30	94	50	94	70	94
11	94	31	94	51	94	71	94
12	94	32	94	52	94	72	94
13	94	33	94	53	94	73	94
14	94	34	94	54	94	74	94
15	94	35	94	55	94	75	94
16	94	36	94	56	94	76	94
17	94	37	94	57	94	77	94
18	94	38	94	58	94	78	94
19	94	39	94	59	94	79	94
20	94	40	94	60	94	80	94

	Signature	Date
Originator	Charles C. Seitz	11-3-99
Procedure Owner	Charles C. Seitz	11-3-99
PRG	John A. Schork	11-4-99
Approver	James R. Powles	11/4/99

FIGURE B-2B

Q-#91

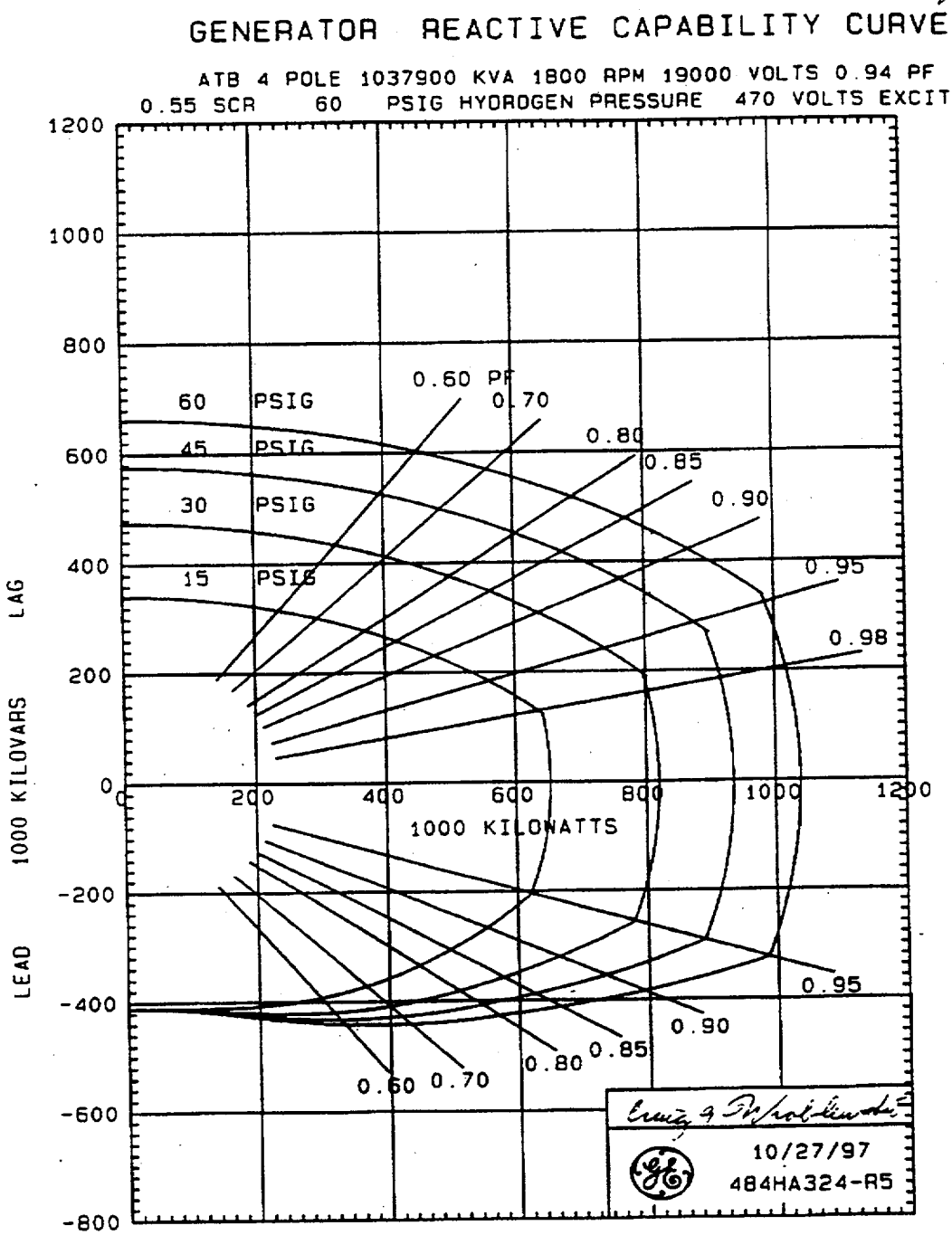

Form ES-401-6

Written Exam Question Worksheet

Q # 092

Examination Outline Cross-Reference

					RO	SRO
KA #	Conduct of Operations 2.1.30	Page	2-4	Tier #	3	
RO/SRO Importance Rating	3.9	3.4		Group #	1	

Measurement Ability to locate and operate components, including local controls: Conduct of operations - local manual operation of MOV.

Proposed Question ☑ RO ☑ SRO **Correct Answer** C

From the list provided, identify the ONE (1) witness required when hand-cranking a motor operated ESAS valve.

A. Licensed Reactor Operator.

B. Member of Plant Engineering staff.

C. Shift Supervisor / Shift Foreman.

D. Shift Technical Advisor.

Technical Reference AP 1029, Conduct of Operations, Rev. 71, Page 28.

Open Exam Reference

Learning Objective V.A.10.16 Identify/explain the requirements for hand cranking motor operated valves to stop valve seat or stem leakage, as delineated in AP 1029, Conduct of Operations.

Question Source ☐ New ☐ TMI Bank TMI Question #
☐ Modified TMI Bank Parent Question #

Question History ☑ Used in Last Two TMI NRC Exams Exam Date 1995 TMI RO
☐ Used in Audit Exam ☐ Used in Training Program Quiz Date

Question Cognitive Level ☑ Memory or Fundamental Knowledge
☐ Comprehension or Analysis

10 CFR Part 55 Content ☑ 55.41 .7 ☐ 55.43 ☑ 55.45 .7

Discriminant Validity Statements

A Plausible misconception since this person holds an active NRC license.

B Plausible misconception regarding systems engineering SME support.

C Correct answer.

D Plausible misconception regarding shift engineering support.

Comments 1995 TMI RO Exam Question 20.

Form ES-401-6

Written Exam Question Worksheet

Q # 093

Examination Outline Cross-Reference

					RO	SRO
KA #	Equipment Control 2.2.11	Page	2-6	Tier #	3	
RO/SRO Importance Rating	2.5	3.4		Group #	2	

Measurement Knowledge of the process for controlling temporary changes: documentation/approval requirements for temporary valve lineup changes.

Proposed Question ☑ RO ☑ SRO **Correct Answer** D

To support plant start-up, the valve line-up of a system is required to be modified until work is completed on that system. From the list below, identify the ONE (1) correct description of approval(s) required to permit this valve line up change, in accordance with AP 1001A.

A. Two Licensed CROs.

B. Shift Supervisor with an SRO License.

C. One Licensed CRO AND the on-shift STA.

D. One Licensed CRO AND one Shift Supervisor/Shift Foreman with an SRO license.

Technical Reference AP 1001A, Procedure Review and Approval, Rev. 39, Page 19.

Open Exam Reference

Learning Objective V.A.02.04 Explain the requirements for making temporary changes to valve line-ups per AP 1001A.

Question Source ☐ New ☐ TMI Bank TMI Question #
☐ Modified TMI Bank Parent Question #

Question History ☑ Used in Last Two TMI NRC Exams Exam Date 1998 TMI SRO
☐ Used in Audit Exam ☐ Used in Training Program Quiz Date

Question Cognitive Level ☑ Memory or Fundamental Knowledge
☐ Comprehension or Analysis

10 CFR Part 55 Content ☑ 55.41 .10 ☑ 55.43 .3 ☑ 55.45 .13

Discriminant Validity Statements

A Plausible since both CROs are licensed.

B Plausible since the SS is the senior shift management representative responsible for all operations.

C Plausible misconception since this incorrect answer involves two individuals concurring independently.

D Correct answer.

Comments 1998 TMI SRO Exam Question 49.

Form ES-401-6 **Written Exam Question Worksheet** Q # 094

Examination Outline Cross-Reference RO SRO

KA # Equipment Control 2.2.12 Page 2-6 Tier # 3

RO/SRO Importance Rating 2.5 3.4 Group # 2

Measurement Knowledge of surveillance procedures: Equipment control - actions required when surveillance test procedure acceptance criteria is not satisfied.

Proposed Question ☑ RO ☑ SRO **Correct Answer** C

Plant conditions:
- Reactor power is 100%.

During performance of SP 1301-1, Shift and Daily Checks, RM-A-4P failed to respond to the source check.

Identify the ONE (1) statement that describes PROCEDURALLY REQUIRED reactor operator actions.

A. Apply a CAUTION TAG to RM-A-4P.

B. Apply a DO NOT OPERATE TAG to RM-A-4P.

C. Complete a SDR (Surveillance Deficiency Report) sheet.

D. Notify the Radcon Department that RM-A-4P is inoperable.

Technical Reference SP 1301-1, Shift and Daily Checks, Rev. 134, Pages 10 & 19.
AP 1001J, Technical Specification Surveillance Testing Program, Rev. 21, Sections 4.3 and 4.3.1, Pages 7 through 10.

Open Exam Reference

Learning Objective V.A.04.15 Given a situation or condition which could arise during Tech. Spec. surveillance testing, properly document any deficiencies on a Surveillance Deficiency Report (SDR) per AP-1001J, Technical Specification Surveillance Testing Program.

Question Source ☑ New ☐ TMI Bank TMI Question #
☐ Modified TMI Bank Parent Question #

Question History ☐ Used in Last Two TMI NRC Exams Exam Date
☐ Used in Audit Exam ☐ Used in Training Program Quiz Date

Question Cognitive Level ☑ Memory or Fundamental Knowledge
☐ Comprehension or Analysis

10 CFR Part 55 Content ☑ 55.41 .10 ☑ 55.43 .3 ☑ 55.45 .13

Discriminant Validity Statements

A Plausible misconception regarding application of Caution Tags.

B Plausible misconception regarding application of DNO Tags.

C Correct answer.

D Plausible misconception regarding sampling requirements.

Comments None.

Form ES-401-6

Written Exam Question Worksheet

Q # 095

Examination Outline Cross-Reference

					RO	SRO
KA #	Equipment Control 2.2.13	Page	2-6	Tier #	3	
RO/SRO Importance Rating	3.6	3.8		Group #	2	

Measurement Knowledge of tagging and clearance procedures: equipment control - approval requirements for operation of blue-tagged equipment.

Proposed Question ☑ RO ☑ SRO **Correct Answer** C

In addition to the person having clearance, identify ONE (1) specific person whose approval is required prior to changing the condition or position of BLUE tagged ES equipment (SINGLE manipulation).

A. Director, Operations and Maintenance.

B. Plant Operations Director.

C. Duty Shift Supervisor/Shift Foreman.

D. Licensed Control Room Operator.

Technical Reference AP 1002, Rules for Protection of Employees Working on Electrical and Mechanical Apparatus, Rev. 85, Page 9.

Open Exam Reference

Learning Objective V.A.01.02 State whose permission is required to change the position/condition of blue tagged equipment IAW AP 1002.

Question Source ☐ New ☐ TMI Bank TMI Question #
☐ Modified TMI Bank Parent Question #

Question History ☑ Used in Last Two TMI NRC Exams Exam Date 1998 TMI SRO
☐ Used in Audit Exam ☐ Used in Training Program Quiz Date

Question Cognitive Level ☑ Memory or Fundamental Knowledge
☐ Comprehension or Analysis

10 CFR Part 55 Content ☑ 55.41 .10 ☐ 55.43 ☑ 55.45 .13

Discriminant Validity Statements

A A plausible misconception as this is a senior management official.

B A plausible misconception as this is a senior management official.

C Correct answer.

D Plausible misconception since this individual is licensed by the NRC.

Comments 1998 TMI SRO Exam Question 11.

Form ES-401-6

Written Exam Question Worksheet

Q # 096

Examination Outline Cross-Reference

RO SRO

KA # Equipment Control 2.2.13 Page 2-6 Tier # 3

RO/SRO Importance Rating 3.6 0 Group # 2

Measurement Knowledge of tagging and clearance procedures: equipment control - clearance requirements for maintenance to perform work on tagged equipment.

Proposed Question ☑ RO ☑ SRO **Correct Answer** D

A mechanical maintenance repairman did not report clear/tags to remain prior to leaving the site, and he cannot be contacted.

From the list below, identify the ONE (1) person authorized per AP 1002 to report the repairman clear with tags to remain -YES.

A. Plant Maintenance Director.

B. Plant Operations Director.

C. SS/SF knowledgeable of job status.

D. Shift Maintenance Foreman knowledgeable of job status.

Technical Reference AP 1002, Rules for Protection of Employees Working on Electrical and Mechanical Apparatus, Rev. 85, Page 27.

Open Exam Reference

Learning Objective V.A.01.25 Given information concerning a tagging application, be able to identify any conditions, limitations, exceptions, or special directions that are applicable to the tagging application.

Question Source ☑ New ☐ TMI Bank TMI Question #

☐ Modified TMI Bank Parent Question #

Question History ☐ Used in Last Two TMI NRC Exams Exam Date

☐ Used in Audit Exam ☐ Used in Training Program Quiz Date

Question Cognitive Level ☑ Memory or Fundamental Knowledge

☐ Comprehension or Analysis

10 CFR Part 55 Content ☑ 55.41 .10 ☐ 55.43 ☑ 55.45 .13

Discriminant Validity Statements

A Plausible misconception regarding the authority vested in this maintenance director position.

B Plausible misconception regarding the authority vested in this director position.

C Plausible misconception since this member of management holds a current NRC license.

D Correct answer.

Comments None.

Form ES-401-6

Written Exam Question Worksheet

Q # 097

Examination Outline Cross-Reference

RO SRO

KA # Radiation Control 2.3.1 Page 2-9 Tier # 3

RO/SRO Importance Rating 2.6 3 Group # 3

Measurement Knowledge of 10 CFR 20 and related facility radiation control requirements: radiation control - approval requirements for emergency condition exposures in excess of normal limits.

Proposed Question ☑ RO ☑ SRO **Correct Answer** B

Identify the ONE (1) statement that describes the requirement(s) for an individual to be allowed to receive a TEDE dose greater than 4000 mRem per year, excluding a planned special exposure.

A. A special RWP is written covering the individual to be permitted to exceed 4000 mRem.

B. Approvals from the Radcon/Environmental Health & Safety Director AND the Site Director.

C. Approval from the President of the Company.

D. Notification of the NRC.

Technical Reference GET Radiation Worker Training Handout, Rev. 5, Page 14.

Open Exam Reference

Learning Objective III.F.02.01 State the Federal and TMI-1 Administrative Limits on Radiation Exposure at TMI-1 for whole body, skin and extremities.

Question Source ☐ New ☐ TMI Bank TMI Question #

☐ Modified TMI Bank Parent Question #

Question History ☑ Used in Last Two TMI NRC Exams Exam Date 1998 TMI SRO

☐ Used in Audit Exam ☐ Used in Training Program Quiz Date

Question Cognitive Level ☑ Memory or Fundamental Knowledge

☐ Comprehension or Analysis

10 CFR Part 55 Content ☑ 55.41 .12 ☑ 55.43 .4 ☑ 55.45 .9, .10

Discriminant Validity Statements

A Plausible misconception that a special RWP would permit additional exposure.

B Correct answer.

C Plausible misconception since this individual is required to pre-approve exposures in excess of 4500 mRem.

D Plausible misconception that the NRC could authorize additional exposure.

Comments 1998 TMI SRO Exam Question 6.

Form ES-401-6

Written Exam Question Worksheet

Q # 098

Examination Outline Cross-Reference

RO SRO

KA # Radiation Control 2.3.2 Page 2-9 Tier # 3

RO/SRO Importance Rating 2.5 0 Group # 3

Measurement Knowledge of facility ALARA program.

Proposed Question ☑ RO ☑ SRO **Correct Answer** D

A job is to be performed in an area that has a general radiation dose rate of 60 mRem/hr. Installation of temporary shielding to reduce the dose rate to 10 mRem/hr will require a total dose of 30 mRem (for installation and removal).

From the list below, identify the ONE (1) option that will meet ALARA expectations for the entire job process.

A. 2 workers each taking 35 minutes to perform the job.

B. 1 worker taking 60 minutes to perform the job.

C. Utilize temporary shielding, 2 workers each taking 35 minutes to perform the job.

D. Utilize temporary shielding, 1 worker takes 60 minutes to perform the job.

Technical Reference GET Radiation Worker Training Handout, Rev. 5, Page 19.

Open Exam Reference

Learning Objective III.F.01.08, Explain the ALARA program used at TMI-1.
III.F.01.09 Explain how time, distance and shielding can be used to minimize radiation exposure.

Question Source ☑ New ☐ TMI Bank TMI Question #
☐ Modified TMI Bank Parent Question #

Question History ☐ Used in Last Two TMI NRC Exams Exam Date
☐ Used in Audit Exam ☐ Used in Training Program Quiz Date

Question Cognitive Level ☐ Memory or Fundamental Knowledge
☑ Comprehension or Analysis

10 CFR Part 55 Content ☑ 55.41 .12 ☑ 55.43 .4 ☑ 55.45 .9, .10

Discriminant Validity Statements

A 70 mRem total.

B 60 mRem total.

C 30 + 11.6 = 41.6 mRem total.

D Correct answer (30 + 10 = 40 mRem total).

Comments None.

Form ES-401-6

Written Exam Question Worksheet

Q # 099

Examination Outline Cross-Reference

RO SRO

KA # Emergency Procedures/Plan 2.4.2 Page 2-11 Tier # 3

RO/SRO Importance Rating 3.9 4.1 Group # 4

Measurement Knowledge of system setpoints, interlocks and automatic actions associated with EOP entry conditions: Emergency procedures/plan - given setpoints, interlocks, automatic actions, enter correct EOP.

Proposed Question ☑ RO ☑ SRO **Correct Answer** A

From the list below, identify the ONE (1) condition that requires entry into EP 1202-33, Tornado/High Winds.

A. A Tornado Watch has been issued by the National Weather Service.

B. Wind Speed Recorder (NWS-R-501E) indicates sustained wind speed of 45 mph.

C. Wind Speed Recorder (NWS-R-501E) indicates sustained wind speed of 40 mph with gusts up to 55 mph.

D. System Dispatcher identifies unstable grid conditions due to a storm in the Philadelphia area.

Technical Reference EP 1202-33, Tornado/High Winds, Rev. 20, Page 2.

Open Exam Reference

Learning Objective V.D.15.01 Identify the conditions that require implementation of the Tornado/High Winds procedure per EP 1202-33.

Question Source ☐ New ☐ TMI Bank TMI Question #

☑ Modified TMI Bank Parent Question # SR5D15-01-Q01

Question History ☐ Used in Last Two TMI NRC Exams Exam Date

☐ Used in Audit Exam ☐ Used in Training Program Quiz Date

Question Cognitive Level ☑ Memory or Fundamental Knowledge

☐ Comprehension or Analysis

10 CFR Part 55 Content ☑ 55.41 .7 ☐ 55.43 ☑ 55.45 .7, .8

Discriminant Validity Statements

A Correct answer.

B Plausible distracter since this parameter is monitored for entry conditions.

C Plausible distracter since this parameter is monitored for entry conditions.

D Plausible distracter since this inclement weather can cause grid disturbances.

Comments Parent question SR5D15-01-Q01 was used on Program Quizzes dated 5/13/99 and 5/18/99.

Form ES-401-6

Written Exam Question Worksheet

Q # 100

Examination Outline Cross-Reference

					RO	SRO
KA #	Emergency Procedures/Plan 2.4.31	Page	2-14	Tier #	3	
RO/SRO Importance Rating	3.3	3.4		Group #	4	

Measurement Knowledge of annunciators, alarms and indications, and use of the response instructions: emergency procedures/plan - use of symptoms to ID required entry to EP.

Proposed Question ☑ RO ☑ SRO **Correct Answer** B

Plant conditions:
- Pump down of RCS is in progress.
- DH-P-1A is in service.
- Low DH Pump Flow annunciator C-1-7 is actuated.
- RCS temperature is increasing.
- Discharge pressure for DH-P-1A is unstable.
- Motor amperage indication for DH-P-1A is unstable.
- Noise is reported in DH-P-1A vault.

From the list below, identify the ONE (1) statement that describes required operator actions for this situation.

A. Place Loop B Decay Heat Removal System in service, AND trip DH-P-1A.

B. Trip DH-P-1A, AND do NOT restart this pump until appropriate actions have been completed.

C. Place Loop B Decay Heat Removal System in service, AND leave DH-P-1A running until conditions stabilize.

D. Start one Makeup Pump and do NOT trip this pump until Incore Thermocouple temperatures stabilize.

Technical Reference EP 1202-35, Loss of Decay Heat Removal System, Rev. 33, Page 4.

Open Exam Reference

Learning Objective V.D.16.02 Given a list of symptoms, identify the event and determine what Immediate Manual Actions are required per EP 1202-35.

Question Source ☐ New ☐ TMI Bank TMI Question #
☑ Modified TMI Bank Parent Question # QR5D16-02-Q01

Question History ☑ Used in Last Two TMI NRC Exams Exam Date 1998 TMI SRO
☐ Used in Audit Exam ☐ Used in Training Program Quiz Date

Question Cognitive Level ☐ Memory or Fundamental Knowledge
☑ Comprehension or Analysis

10 CFR Part 55 Content ☑ 55.41 .10 ☐ 55.43 ☑ 55.45 .3

Discriminant Validity Statements

A Plausible misconception to start alternate cooling system.

B Correct answer.

C Plausible misconception to start alternate cooling system.

D Plausible misconception to initiate alternate cooling method.

Comments 1998 TMI SRO Exam Question 22 (CEBS Question SR5D16-02-Q02).
Parent CEBS Question (QR5D16-02-Q01) was used on 11/10/99 Audit Exam - Question 73.

ES-401

Written Examination Review Worksheet

Q#	1. LOK (F/H)	2. LOD (1-5)	3. Psychometric Flaws					4. Job Content Flaws				5. U/E/S	6. Explanation
			Stem Focus	Cues	T/F	Cred. Dist.	Partial	Job-Link	Minutia	#/ units	Back-ward		
1	F	3										S	
2	F	2										S	Why both F and C for #2.D temp? Is this information required to be memorized by the operators as part of SAT.
3	H	3									X	S	Backwards logic.
4	F	2										S	Does the procedure specify how to verify tank level decreasing?
5	F	2?										S	Maybe overly simplistic setpoint question
6	H	3										E	Stem needs revision - incomplete thought.
7	F	2?										S	Basis question hot shutdown boron conc.
8	H	3										S	Explain why this answer is correct - does not look correct.
9	F	2									X	S	Backwards logic.
10	F	2										S	

Instructions

[Refer to Appendix B for additional information regarding each of the following concepts.]

1. Enter the level of knowledge (LOK) of each question as either (F)undamental or (H)igher cognitive level.
2. Enter the level of difficulty (LOD) of each question using a 1 - 5 (easy - difficult) rating scale (questions in the 2 - 4 range are acceptable).
3. Check the appropriate box if a psychometric flaw is identified:
   - The stem lacks sufficient focus to elicit the correct answer (e.g., unclear intent, more information is needed, or too much needless information).
   - The stem or distractors contain cues (i.e., clues, specific determiners, phrasing, length, etc).
   - The answer choices are a collection of unrelated true/false statements.
   - More than one distractor is not credible.
   - One or more distractors is (are) partially correct (e.g., if the applicant can make unstated assumptions that are not contradicted by stem).
4. Check the appropriate box if a job content error is identified:
   - The question is not linked to the job requirements (i.e., the question has a valid K/A but, as written, is not operational in content).
   - The question requires the recall of knowledge that is too specific for the closed reference test mode (i.e., it is not required to be known from memory).
   - The question contains data with an unrealistic level of accuracy or inconsistent units (e.g., panel meter in percent with question in gallons).
   - The question requires reverse logic or application compared to the job requirements.
5. Based on the reviewer's judgment, is the question as written (U)nacceptable (requiring repair or replacement), in need of (E)ditorial enhancement, or (S)atisfactory?
6. For any "U" ratings, at a minimum, explain how the Appendix B psychometric attributes are not being met.

ES-401

2

Q#	1. LOK (F/H)	2. LOD (1-5)	3. Psychometric Flaws					4. Job Content Flaws				5. U/E/S	6. Explanation
			Stem Focus	Cues	T/F	Cred. Dist.	Partial	Job-Link	Minutia	#/ units	Back-ward		
11	F	2										S	
12	F	2										S	FIRE IN THE CONTROL ROOM..Is this an alarm. Delete "rapid."
13	F	2										S	Give reason why this is not a simplistic electrical power supply question
14	F	2										S	
15	F	2										S	Add "The following ....." Would both FW pumps be running at 42% pwr?
16	H	3										S	Change 30A-D to 30A/30B/30C/30D (Consistent with others throughout exam.)
17	F	~~1~~?										S	May be too simplistic. Explain WHY NOT? OK
18	H	3										S	
19	H	2										S	
20	H	2										S	
21	H	2										S	Minor edit stem and distractor.
22	H	2										S	
23	F	2										S	Minor edit stem.
24	F	2										S	
25	H	2										S	Too close to throttling question from question #10. Will replace
26	H	3										S	
27	F	1										S??	~~Overly simplistic~~ - overpressure protection ~~DH~~ system. Is "A" plausible? Straight
28	H	3										S	
29	H	3										S	
30	F	~~1~~?										S??	Bases question.

Q#	1. LOK (F/H)	2. LOD (1-5)	3. Psychometric Flaws					4. Job Content Flaws				5. U/E/S	6. Explanation
			Stem Focus	Cues	T/F	Cred. Dist.	Partial	Job-Link	Minutia	#/ units	Back-ward		
31	F	3										S	
32	F	2										S	
33	F	3										S	
34	F	2										S	Minor edit.
35	H	2										S	Plausible distractors for "C" (increasing and decreasing)? ✓
36	F	2										S	Bases question...and simplistic.
37	H	3										S	
38	H	3										S	
39	F	2										S	Minor editing. Electrical power supplies.
40	F	2										S	Bases question.
41	F	2										S	Bases question.
42	F	2										S	
43	F	3										S	
44	H	2										S	Replace distractor "C" because it is partially correct. OK
45	H	3										S	???? will fix
46	H	3										S	
47	H	3										S	Delete "This action adds.....rx power." Candidate should know this.
48	H	4										S	
49	H	2										S	can not ->cannot
50	H	2										S	Change C-OP-2A is operating, to running. Verbage aligns itself with CO-P-1A is running

Q#	1. LOK (F/H)	2. LOD (1-5)	3. Psychometric Flaws					4. Job Content Flaws				5. U/E/S	6. Explanation
			Stem Focus	Cues	T/F	Cred. Dist.	Partial	Job-Link	Minutia	#/ units	Back-ward		
51	H	3										S	
52	H	2										S	
53	H	2										S	
54	H	2										S	
55	F	2										S	Bases question.
56	F	2										S	
57	F	1-2?		X		X						S	Answer obvious, Overly simplistic. OK per Rich
58	F	2										S	
59	F	2										S	
60	F	1-2										S	Setpoint question. (Cognitive level is not comprehension as listed) OK per Rich
61	F	2										S	
62	H	3										S	Plant cooldown was stopped in order "to" cycle.....
63	F	1				X						U?	Overly simplistic setpoint question, doesn't discriminate. OK per Rich
64	H	3										S	
65	H	2				X						S	Answer appears obvious - Plausible distractors?
66	H	3										S	For "D", reverse Main and Startup to correspond with "A"
67	H	2										S	
68	F	2										S	
69	F	3										S	Minor Edit (indication "that" pegs high?)
70	H	3										S	

Q#	1. LOK (F/H)	2. LOD (1-5)	3. Psychometric Flaws					4. Job Content Flaws				5. U/E/S	6. Explanation
			Stem Focus	Cues	T/F	Cred. Dist.	Partial	Job-Link	Minutia	#/ units	Back-ward		
71	F	3										S	Bases question. Could not "B" also be a correct answer?
72	F	2										S	"NO increase.....following trip"? Is this statement in the stem really necessary?
73	H	2										S	
74	F	3										S	
75	H	2										S	Minor edit of one distractor. Also, comprehension versus memory for cognitive level.
76	H	2										S	
77	F	2										S	
78	F	1						X	X			U?	Setpoint question. OK change
79	F	2										S	
80	H	2										S	
81	H	2										S	
82	F	1						X	X			S?	Significance? OK talk about it
83	F	2										S	Isn't upender one word? yes
84	F	2										S	
85	F	2							X			S?	Basic memory question.
86	F	2										S	
87	H	2										S	
88	F	2										S	Change distractor "D." See working copy.
89	H	2										S	
90	F	2										S	Discriminant validy statement A doesn't agree with distractor A. Also, don't like non-licensed distractors. Is "C" wrong because of temperature? Where is the SS Office?

4. Job Content Flaws				5.	6.
b-nk	Minutia	#/ units	Back-ward	U/E/S	Explanation
				S	Check reference to ensure not direct lookup. Don't like distractor "A since stem of question states that Max. Generation Emergency was declared.
				S	Use below versus provided in the stem.
				S	
				S	
				S	Reverify stem clarity. Too similar to question #92.
				S	Question stem verbage is not very clear. Rewrite.
				S	Answer seems obvious. Any better question?
				S	
				S	
				S	

ındard allows 50 max. My initial impression is that the test needs to be geared up a bit with more higher order questions.
t questions and several other overly simplistic questions.

ES-401 Written Examination Review Worksheet Form ES-401-9

Q#	1. LOK (F/H)	2. LOD (1-5)	3. Psychometric Flaws					4. Job Content Flaws				5. U/E/S	6. Explanation
			Stem Focus	Cues	T/F	Cred. Dist.	Partial	Job-Link	Minutia	#/ units	Back-ward		
1	F	3										S	
2	F	2										S	Why both F and C for #2.D temp? Is this information required to be memorized by the operators as part of SAT.
3	H	3									X	S	Backwards logic.
4	F	2										S	Does the procedure specify how to verify tank level decreasing?
5	F	2?										S	Maybe overly simplistic setpoint question
6	H	3										E	Stem needs revision - incomplete thought.
7	F	2?										S	Basis question hot shutdown boron conc.
8	H	3										S	Explain why this answer is correct - does not look correct.
9	F	2									X	S	Backwards logic.
10	F	2										S	

Instructions

[Refer to Appendix B for additional information regarding each of the following concepts.]

1. Enter the level of knowledge (LOK) of each question as either (F)undamental or (H)igher cognitive level.
2. Enter the level of difficulty (LOD) of each question using a 1 - 5 (easy - difficult) rating scale (questions in the 2 - 4 range are acceptable).
3. Check the appropriate box if a psychometric flaw is identified:
   - The stem lacks sufficient focus to elicit the correct answer (e.g., unclear intent, more information is needed, or too much needless information).
   - The stem or distractors contain cues (i.e., clues, specific determiners, phrasing, length, etc).
   - The answer choices are a collection of unrelated true/false statements.
   - More than one distractor is not credible.
   - One or more distractors is (are) partially correct (e.g., if the applicant can make unstated assumptions that are not contradicted by stem).
4. Check the appropriate box if a job content error is identified:
   - The question is not linked to the job requirements (i.e., the question has a valid K/A but, as written, is not operational in content).
   - The question requires the recall of knowledge that is too specific for the closed reference test mode (i.e., it is not required to be known from memory).
   - The question contains data with an unrealistic level of accuracy or inconsistent units (e.g., panel meter in percent with question in gallons).
   - The question requires reverse logic or application compared to the job requirements.
5. Based on the reviewer's judgment, is the question as written (U)nacceptable (requiring repair or replacement), in need of (E)ditorial enhancement, or (S)atisfactory?
6. For any "U" ratings, at a minimum, explain how the Appendix B psychometric attributes are not being met.

F2

NRC Written Examination Changes

NRC Comments - January 11-12, 2000	
Q #	**Change**
006	Editorial changes.
012	Editorial changes.
015	Editorial changes.
016	Editorial changes.
021	Editorial changes.
034	Editorial changes.
038	Editorial changes.
039	Editorial changes.
044	Editorial changes – NRC has not seen the changes yet. DONE 1/24/00
045	Editorial changes – NRC has not seen the changes yet. DONE 1/24/00
049	Editorial changes.
050	Editorial changes.
062	Editorial changes.
066	Editorial changes.
069	Editorial changes.
083	Editorial changes.
088	Editorial changes.
092	Editorial changes.
095	Editorial changes.
017	Replace with higher cognitive level question. NRC underestimated the complexity of the original question. Distracter A was replaced, and the question was approved following clarification.
010	Replace question – too similar to question # 25 (also addresses pump runout concerns.)
057	Replace with higher cognitive level question.
060	Replace with higher cognitive level question.
063	Replace with higher cognitive level question.
078	Replace with higher cognitive level question.
082	Replace with higher cognitive level question.

Approved Replacement Questions from 1998 SRO Exam	
004	Replacement for CRO # 010, as written.
014	Approved with editorial changes.
020	Replacement for CRO #057 (approved with editorial changes).
031	Approved as written.
061	Approved with editorial changes.
067	Approved as written.

AmergenEnergy Changes	
008	CRO validation/review comment: Eliminate opposing RCS cooldown effects on SCM.
015	Specified FWP flows are initially matched.
020	Specified ICS is initially in full automatic.
031	Replaced missing question stem.
035	Inserted stem bullet to specify adequate Subcooled Margin exists. Also corrected Amergen enabling objective, TIF.
048	Editorial changes. Approved by NRC on 1/12/00.
061	Specified procedural actions to clear automatic actuation signals.
095	Editorial changes: updated two titles in distracters.
097	Specified minimum and 4100 mRem in the question stem.

Form ES-401-6

Written Exam Question Worksheet

Q # 006

Examination Outline Cross-Reference

RO SRO

KA # APE 027 AK2.03 Page 4.2-20 Tier # 1

RO/SRO Importance Rating 2.6 2.8 Group # 1

Measurement Knowledge of the interrelations between the Pressurizer Pressure Control Malfunctions and the controllers and positioners: Predict/monitor/control effects of Pressurizer pressure control malfunction.

Proposed Question ☑ RO ☑ SRO **Correct Answer** B

Sequence of events:
- Initial reactor power = 90%.
- FW-P-1A trips and an automatic ICS runback is in progress.
- At 2225 psig RCS pressure (still increasing), the selected RCS pressure transmitter fails low (SASS DOES NOT ACTUATE).
- NO manual operations have been performed.

From the list below, identify the ONE (1) group of automatic actions that will occur ~~(LISTED IN CHRONOLOGICAL ORDER)~~ if this plant situation continues and ~~the~~ NO operator ~~does NOT intervene with manual~~ actions. Are taken

A. RC-V-1 CLOSES;
Pressurizer heaters ENERGIZE;
Reactor trips on LOW RCS pressure.

B. RC-V-1 CLOSES;
Pressurizer heaters ENERGIZE;
Reactor trips on HIGH RCS pressure.

C. RC-V-1 remains OPEN;
Pressurizer heaters DE-ENERGIZE;
Reactor trips on HIGH RCS pressure.

D. RC-V-1 remains OPEN;
Pressurizer heaters DE-ENERGIZE;
Reactor trips on LOW RCS pressure.

Technical Reference EP 1202-29, Pressurizer System Failure, Rev. 54, Pages 5 and 7.

Open Exam Reference

Learning Objective V.D.11.03 Given a list of symptoms, identify the event, determine what Immediate Automatic Actions will occur and what Immediate Manual Actions are required IAW EP 1202-29.

Question Source ☑ New ☐ TMI Bank TMI Question #
☐ Modified TMI Bank Parent Question #

Question History ☐ Used in Last Two TMI NRC Exams Exam Date
☐ Used in Audit Exam ☐ Used in Training Program Quiz Date

Question Cognitive Level ☐ Memory or Fundamental Knowledge
☑ Comprehension or Analysis

10 CFR Part 55 Content ☑ 55.41 .7 ☐ 55.43 ☑ 55.45 .7

Discriminant Validity Statements

A Plausible because all actions listed occur in response to an actual decrease in RCS pressure.

B Correct answer. The first two actions result in the third action.

C Plausible because all actions listed occur in response to an actual increase in RCS pressure.

D Plausible because first two actions occur in response to an actual increase in RCS pressure.

Comments None.

Form ES-401-6

Written Exam Question Worksheet

Q # 008

Examination Outline Cross-Reference

RO SRO

KA # APE 056 AK1.04 Page 4.2-37 Tier # 1

RO/SRO Importance Rating 3.1 3.2 Group # 1

Measurement Knowledge of the operational implications of the definition of saturation conditions, implications for the systems as applicable to Loss of Offsite Power:

Proposed Question ☑ RO ☑ SRO **Correct Answer** B

Plant conditions:
- A loss of station power has occurred.
- Only the 1D 4KV bus has been re-energized.
- Pressurizer heaters have NOT been energized.
- Pressurizer level is being maintained at 100 inches.
- OTSG levels are being maintained at 50% operating range.
- RCS natural circulation has been obtained and verified.
- RCS Subcooled margin is 50 degrees F.
- Core cooldown rate is ~~5~~ 0 degrees F/hour.

From the list below, identify the ONE (1) statement that describes expected RCS Subcooled margin response.

A. Increase as core temperatures decrease.

B. Decrease as Pressurizer temperature decreases.

C. Remain fairly constant with constant Pressurizer level.

D. Remain fairly constant with constant core cooldown rate.

Technical Reference EP 1202-2, Loss of Station Power, Rev. 49, Page 6.

Open Exam Reference

Learning Objective IV.A.01.06 Describe how RCS pressurizer pressure is maintained to include:
a. Heaters and their setpoints.

Question Source ☑ New ☐ TMI Bank TMI Question #
☐ Modified TMI Bank Parent Question #

Question History ☐ Used in Last Two TMI NRC Exams Exam Date
☐ Used in Audit Exam ☐ Used in Training Program Quiz Date

Question Cognitive Level ☐ Memory or Fundamental Knowledge
☑ Comprehension or Analysis

10 CFR Part 55 Content ☑ 55.41 .8, .10 ☐ 55.43 ☑ 55.45 .3

Discriminant Validity Statements

A Plausible because with constant pressure, SCM increases as temperature decreases.

B Correct answer.

C Plausible if Pressurizer heaters were available to maintain Pressurizer temperature.

D Plausible if Pressurizer heaters were available to maintain Pressurizer temperature.

Comments None.

Form ES-401-6

Written Exam Question Worksheet

Q # 012

Examination Outline Cross-Reference

					RO	SRO
KA #	APE 068 AA1.23	Page	4.2-55	Tier #	1	
RO/SRO Importance Rating	4.3	4.4		Group #	1	

Measurement Ability to operate and/or monitor manual trip of reactor and turbine as applicable to the Control Room Evacuation.

Proposed Question ☑ RO ☑ SRO **Correct Answer** D

Plant conditions:
- Reactor power is 100%.
- FIRE IN THE CONTROL ROOM requires immediate evacuation.

(Lower case)

Due to degrading Control Room conditions, time is not available to complete ALL Immediate Actions of ATP 1210-1.

From the list below, identify the ONE (1) statement that describes the action(s) procedurally REQUIRED to be completed PRIOR TO LEAVING THE CONTROL ROOM, in accordance with EP 1202-37, Cooldown Outside the Control Room.

A. Start a second Makeup Pump AND Open MU-V-217.

B. Verify Safety System Status.

C. Verify Subcooling Margin exists.

D. Manually trip the Turbine.

Technical Reference EP 1202-37, Cooldown From Outside the Control Room, Rev. 52, Page 2.

Open Exam Reference

Learning Objective V.D.18.02 State and explain the immediate manual actions required for a control room evacuation per EP 1202-37, Cooldown from Outside the Control Room.

Question Source ☑ New ☐ TMI Bank TMI Question #
☐ Modified TMI Bank Parent Question #

Question History ☐ Used in Last Two TMI NRC Exams Exam Date
☐ Used in Audit Exam ☐ Used in Training Program Quiz Date

Question Cognitive Level ☑ Memory or Fundamental Knowledge
☐ Comprehension or Analysis

10 CFR Part 55 Content ☑ 55.41 .7 ☐ 55.43 ☑ 55.45 .5, .6

Discriminant Validity Statements

A Plausible distracter since this is an Immediate Action contained in 1210-1.

B Plausible distracter since this is an Immediate Action contained in 1210-1.

C Plausible distracter since this is an Immediate Action contained in 1210-1.

D Correct answer.

Comments None.

Form ES-401-6

Written Exam Question Worksheet

Q # 015

Examination Outline Cross-Reference RO SRO

KA # EPE E02 AK3.2 Page 4.3-29 Tier # 1

RO/SRO Importance Rating 3.7 4 Group # 1

Measurement Knowledge of the reasons for normal, abnormal and emergency operating procedures associated with Loss of NNI Hand Power.

Proposed Question ☑ RO ☑ SRO **Correct Answer** A

Plant conditions:
- Reactor Power is 42%.
- The following ICS Stations are in HAND due to ICS automatic control problems:
  FW-P-1A, FW-P-1B (FWP flows are matched)
  FW-V-16A, FW-V-16B
  FW-V-17A, FW-V-17B
- All other ICS controls are in AUTOMATIC.

LOSS OF ICS HANDPOWER occurs, followed immediately by a TURBINE TRIP.
Net

Identify the ONE (1) statement below that describes procedurally required operator action(s) for this situation.

A. Trip the reactor AND trip both Main Feedwater Pumps.

B. Stabilize reactor power equal to Main Feedwater flow.

C. Transfer control of BOTH Feedwater Pumps to the Motor Speed Changers in the Control Room.

D. Transfer BOTH Main Feedwater Pumps to LOCAL SPEED CONTROL at the feedwater pump control panel.

Technical Reference EP 1202-41, Total or Partial Loss of ICS/NNI Hand Power, Rev. 30, Page 3.

Open Exam Reference

Learning Objective V.D.21.03 State the Immediate Manual Actions required for a Total or Partial Loss of ICS/NNI Hand power per EP 1202-41.

Question Source ☑ New ☐ TMI Bank TMI Question #
☐ Modified TMI Bank Parent Question #

Question History ☐ Used in Last Two TMI NRC Exams Exam Date
☐ Used in Audit Exam ☐ Used in Training Program Quiz Date

Question Cognitive Level ☐ Memory or Fundamental Knowledge
☑ Comprehension or Analysis

10 CFR Part 55 Content ☑ 55.41 .5, .10 ☐ 55.43 ☑ 55.45 .6, .13

Discriminant Validity Statements

A Correct answer.

B Plausible since this action would attempt to balance heat production with heat removal.

C Plausible since this is an alternate method of Feedwater pump control but not an immediate manual action allowed by the procedure.

D Plausible since this is an alternate method of Feedwater pump control but not an immediate manual action prescribed by the procedure.

Comments None.

Form ES-401-6

Written Exam Question Worksheet

Q # 015

Examination Outline Cross-Reference

RO SRO

KA # EPE E02 AK3.2 Page 4.3-29 Tier # 1

RO/SRO Importance Rating 3.7 4 Group # 1

Measurement Knowledge of the reasons for normal, abnormal and emergency operating procedures associated with Loss of NNI Hand Power.

Proposed Question ☑ RO ☑ SRO **Correct Answer** A

Plant conditions:
- Reactor Power is 42%.
- ICS Stations in HAND due to ICS automatic control problems:
  - FW-P-1A, FW-P-1B
  - FW-V-16A, FW-V-16B
  - FW-V-17A, FW-V-17B
- All other ICS controls are in AUTOMATIC.

The following are

LOSS OF ICS HANDPOWER occurs, followed immediately by a TURBINE TRIP.

Identify the ONE (1) statement below that describes procedurally required operator action(s) for this situation.

A. Trip the reactor AND trip both Main Feedwater Pumps.

B. Stabilize reactor power equal to Main Feedwater flow.

C. Transfer control of BOTH Feedwater Pumps to the Motor Speed Changers in the Control Room.

D. Transfer BOTH Main Feedwater Pumps to LOCAL SPEED CONTROL at the feedwater pump control panel.

Technical Reference EP 1202-41, Total or Partial Loss of ICS/NNI Hand Power, Rev. 30, Page 3.

Open Exam Reference

Learning Objective V.D.21.03 State the Immediate Manual Actions required for a Total or Partial Loss of ICS/NNI Hand power per EP 1202-41.

Question Source ☑ New ☐ TMI Bank TMI Question #
☐ Modified TMI Bank Parent Question #

Question History ☐ Used in Last Two TMI NRC Exams Exam Date
☐ Used in Audit Exam ☐ Used in Training Program Quiz Date

Question Cognitive Level ☐ Memory or Fundamental Knowledge
☑ Comprehension or Analysis

10 CFR Part 55 Content ☑ 55.41 .5, .10 ☐ 55.43 ☑ 55.45 .6, .13

Discriminant Validity Statements

A Correct answer.

B Plausible since this action would attempt to balance heat production with heat removal.

C Plausible since this is an alternate method of Feedwater pump control but not an immediate manual action allowed by the procedure.

D Plausible since this is an alternate method of Feedwater pump control but not an immediate manual action prescribed by the procedure.

Comments None.

Form ES-401-6

Written Exam Question Worksheet

Q # 016

Examination Outline Cross-Reference

					RO	SRO
KA #	APE 040 AK2.01	Page	4.2-31	Tier #	1	
RO/SRO Importance Rating	2.6	2.5		Group #	1	

Measurement Knowledge of the interrelations between the Steam Line Rupture and valves: valve response to Main Steam line rupture.

Proposed Question ☑ RO ☑ SRO **Correct Answer** A

Sequence of events:
- Reactor power is initially 100%.
- Steam Line Rupture in the Intermediate Building, upstream of MS-V-1C.
- HSPS actuates.
- OTSG 1B depressurizes to 40 psig.

RCS Subcooling Margin is maintained throughout this event. No operator action has been taken to isolate OTSG 1B.

30A, 30B, 30C, 30D

Identify the ONE (1) statement below that describes the response of EF-V-30A-D under these conditions.

A. EF-V-30A and EF-V-30D remain closed in automatic;
EF-V-30B and EF-V-30C control OTSG 1B level at 25 inches in the Startup Range.

B. EF-V-30A and EF-V-30D remain closed in automatic;
EF-V-30 B and EF-V-30C control OTSG 1B level at 50% in the Operating Range.

C. EF-V-30A and EF-V-30D control OTSG 1A level at 25 inches in the Startup Range;
EF-V-30B and EF-V-30C remain closed due to HSPS (low pressure) actuation.

D. EF-V-30A and EF-V-30D control OTSG 1A level at 25 inches in the Startup Range;
EF-V-30B and EF-V-30C control OTSG 1B level at 25 inches in the Startup Range.

Technical Reference ATP 1210-10 Abnormal Transients Rules, Guides and Graphs, Rev. 37, OTSG Level Rule 1.6, Pages 5 & 6.
ATP 1210-1, Reactor Trip, Rev. 40, Step 2.7, Page 4.

Open Exam Reference

Learning Objective IV.C.05.26 Given a set of plant conditions, determine whether the EFW system has responded correctly.

Question Source ☑ New ☐ TMI Bank TMI Question #
☐ Modified TMI Bank Parent Question #

Question History ☐ Used in Last Two TMI NRC Exams Exam Date
☐ Used in Audit Exam ☐ Used in Training Program Quiz Date

Question Cognitive Level ☐ Memory or Fundamental Knowledge
☑ Comprehension or Analysis

10 CFR Part 55 Content ☑ 55.41 .7 ☐ 55.43 ☑ 55.45 .7

Discriminant Validity Statements

A Correct answer.

B Plausible distracter if actuation setpoint is misunderstood.

C Plausible distracter if actuation setpoint and HSPS isolation is misunderstood.

D Plausible distracter if HSPS isolation is misunderstood.

Comments None.

Form ES-401-6

Written Exam Question Worksheet

Q # 017

Examination Outline Cross-Reference RO SRO

KA # APE 001 AA2.01 Page 4.2-3 Tier # 1

RO/SRO Importance Rating 4.5 4.8 Group # 2

Measurement Ability to determine and interpret the following as they apply to the Continuous Rod Withdrawal: Reactor Trip Breaker Indication.

Proposed Question ☑ RO ☑ SRO **Correct Answer** C

Plant conditions and events:
- RPS Channel A is in Manual Bypass.
- Plant startup in progress with reactor power at 5E-7 amps on the Intermediate Range NIs.
- Continuous, uncontrollable CRD Group 7 rod withdrawal occurs.
- High startup rate is indicated on the NI startup rate indicators.

The Control Room Operator MANUALLY trips the reactor.

~~Given the above plant conditions~~, identify the ONE (1) situation below that confirms ALL the CRD breakers have OPENED.

A. All rods in CRD Groups 1-7 drop, fully inserted into the core.

B. Alarms G-1-3 (CRD DC Trip Brkr Open) AND G-1-4 (CRD AC Trip Brkr Open) actuate.

C. RPS Breaker Trip Lights on ALL 4 RPS Cabinets are energized.

D. RPS Protective Subsystem Lights on ALL 4 RPS Cabinets are energized.

Technical Reference OPM Section F-02, Reactor Protection System, Rev 8 Page 117

Open Exam Reference

Learning Objective IV.E.14.10 Given the RPS cabinet status and/or CRD Breaker status, determine if a reactor trip has occurred and/or which control rod groups have tripped.

Question Source ☑ New ☐ TMI Bank TMI Question #
☐ Modified TMI Bank Parent Question #

Question History ☐ Used in Last Two TMI NRC Exams Exam Date
☐ Used in Audit Exam ☐ Used in Training Program Quiz Date

Question Cognitive Level ☐ Memory or Fundamental Knowledge
☑ Comprehension or Analysis

10 CFR Part 55 Content ☐ 55.41 ☑ 55.43 .5 ☑ 55.45 .13

Discriminant Validity Statements

A Plausible misconception that all CRD breakers are required to be open in order for the rods to be de-energized and drop into the core.

B Plausible misconception that this alarm combination confirms that all breakers associated with each alarms have opened. Alarm actuation logic does not require ALL breakers to be open.

C Correct answer.

D Plausible misconception that the RPS Protective Trip lights indicate the associated breaker has opened. These lights energize when the RPS Subsystem Reactor Trip module actuates - rather than actual operation (opening) of CRD breakers.

Comments KA catalog does not address 10 CFR 55.41 for this measurement. Amergen feels 10 CFR 55.41 is applicable to this KA Catalog item for TMI.

Form ES-401-6

Written Exam Question Worksheet

Q # 020

Examination Outline Cross-Reference

RO SRO

KA # BWA01 AA1.1 Page 4.3-27 Tier # 1

RO/SRO Importance Rating 3.7 3.7 Group # 2

Measurement Ability to operate and/or monitor components, and functions of control and safety systems, including instrumentation, signals, interlocks, failure modes, and automatic and manual features as applicable to a Plant Runback: actions for ICS Runback failure.

Proposed Question ☑ RO ☑ SRO **Correct Answer** D

Plant conditions:

Sequence of events:

- Reactor power 85%. ICS in full automatic
- FW-P-1A tripped concurrent with a total loss of ICS Hand Power.
- ICS Runback failed to occur.
- The following alarms are actuated:
  - ICS IN TRACK
  - ICS HIGH LOAD LIMITED

From the list below, identify the ONE (1) statement that describes required operator action(s) for this condition.

A. Trip the Reactor/Turbine AND go to ATP 1210-1.

B. Place FW-P-1B in HAND AND increase feedwater flow.

C. Reduce the ULD ~~setpoint~~ output demand to 68% (585 MWe) AND verify the plant runs back.

D. Place the SG/Rx Master in HAND AND reduce power to 68% (585 MWe).

Technical Reference ARP MAP H-1-1, ICS Runback, Rev. 19, Page 2.

Open Exam Reference

Learning Objective IV.E.27.60 Given a set of plant conditions, determine the correct ICS response and any actions that must be taken if the ICS response is incorrect.

Question Source ☑ New ☐ TMI Bank TMI Question #

☐ Modified TMI Bank Parent Question #

Question History ☐ Used in Last Two TMI NRC Exams Exam Date

☐ Used in Audit Exam ☐ Used in Training Program Quiz Date

Question Cognitive Level ☐ Memory or Fundamental Knowledge

☑ Comprehension or Analysis

10 CFR Part 55 Content ☑ 55.41 .7 ☐ 55.43 ☑ 55.45 .5, .6

Discriminant Validity Statements

A Plausible distracter since this would result in a reduction in turbine output.

B Plausible distracter since this would attempt to match reactor power and feedwater flow.

C Plausible distracter since this would normally result in a plant power reduction except when ICS Track Alarm is present.

D Correct answer.

Comments None.

Form ES-401-6

Written Exam Question Worksheet

Q # 021

Examination Outline Cross-Reference

					RO	SRO
KA #	BWA04 AA1.1	Page	4.3-33	Tier #	1	
RO/SRO Importance Rating	3.5	3.3		Group #	2	

Measurement Ability to operate and/or monitor components, and functions of control and safety systems, including instrumentation, signals, interlocks, failure modes, and automatic and manual features as applicable to a Turbine Trip: actions for turbine trip at low power.

Proposed Question ☑ RO ☑ SRO **Correct Answer** B

Plant conditions:
- Reactor power is 35%, during plant startup.
- All ICS stations in auto EXCEPT FW-P-1A.

Considering these plant conditions, from the list below identify the ONE (1) statement that describes the operational status of the MAIN TURBINE if the main generator breakers trip due to a generator ground fault.

A. Must be manually tripped.

B. Will ~~immediately~~ trip automatically. w/o a time delay.

C. Will trip automatically after a 30 second time delay.

D. Will revert to Speed Control and remain at 1800 RPM.

Technical Reference ARP MAP K-1-1, Turbine Trip, Rev. 18, Page 1.

Open Exam Reference

Learning Objective IV.E.03.08 Given a specific main turbine trip, explain its operation including control signal(s) monitored, setpoint(s) for actuation and any applicable logic to cause the actuation.

Question Source ☑ New ☐ TMI Bank TMI Question #
☐ Modified TMI Bank Parent Question #

Question History ☐ Used in Last Two TMI NRC Exams Exam Date
☐ Used in Audit Exam ☐ Used in Training Program Quiz Date

Question Cognitive Level ☐ Memory or Fundamental Knowledge
☑ Comprehension or Analysis

10 CFR Part 55 Content ☑ 55.41 41.7 ☐ 55.43 ☑ 55.45 .5, .6

Discriminant Validity Statements

A Plausible if misconception that turbine will not automatically trip on generator fault.

B Correct answer.

C Plausible because there is a 30 second delay generator trip following turbine trip.

D Plausible because this is normal turbine control.

Comments None.

Form ES-401-6

Written Exam Question Worksheet

Q # 031

Examination Outline Cross-Reference

RO SRO

KA # APE 058 AK1.01 Page 4.2-43 Tier # 1

RO/SRO Importance Rating 2.8 3.1 Group # 2

Measurement Knowledge of the operational implications of battery charger equipment and instrumentation as applicable to Loss of DC Power.

Proposed Question ☑ RO ☑ SRO STEM Missing **Correct Answer** B

A. Satisfy a closing interlock for the AC breaker.

B. Prevent damage to the rectifier stack and/or blowing a rectifier anode fuse.

C. Provide a reference voltage for the battery charger regulator control circuit.

D. Ensure the charger is immediately placed in service in order to minimize the loading on the Battery Charger ~~1D~~.

Technical Reference OP 1107-2, Emergency Electrical System, Rev. 72, Page 20.

Open Exam Reference

Learning Objective V.G.10.03 Explain the basic function and operation of the static inverters and battery chargers during both normal and emergency (UV) operation.

Question Source ☑ New ☐ TMI Bank TMI Question #

☐ Modified TMI Bank Parent Question #

Question History ☐ Used in Last Two TMI NRC Exams Exam Date

☐ Used in Audit Exam ☐ Used in Training Program Quiz Date

Question Cognitive Level ☑ Memory or Fundamental Knowledge

☐ Comprehension or Analysis

10 CFR Part 55 Content ☑ 55.41 .8, .10 ☐ 55.43 ☑ 55.45 .3

Discriminant Validity Statements

A Plausible distracter since there is a closing interlock for the AC supply breakers to chargers 'E' and 'F' AC breakers.

B Correct answer.

C Plausible distracter since output voltage is regulated.

D Plausible distracter since the charger will be in service when the breaker is closed.

Comments None.

Form ES-401-6 **Written Exam Question Worksheet** Q # 034

Examination Outline Cross-Reference RO SRO

KA # APE 028 AA1.03 Page 4.2-23 Tier # 1

RO/SRO Importance Rating 2.9 2.9 Group # 3

Measurement Ability to operate and/or monitor RCP and seal water system as applicable to the Pressurizer Level Control Malfunction.

Proposed Question ☑ RO ☑ SRO **Correct Answer** C

Plant conditions:
- Reactor power is 100%.
- MU-P-1B is operating in normal makeup system alignment.
- MU-V-17 is in AUTO with makeup flow at 22 gpm.
- MU-V-32 is in HAND for maintenance with seal injection flow at 38 gpm.

The selected Pressurizer temperature transmitter suddenly fails low.

From the list below, identify the ONE (1) statement that describes makeup and seal injection flow responses to this condition, with no operator action.

A. Makeup flow to decrease and seal injection flow to increase.

B. Makeup flow to decrease, but seal injection flow will not change.

C. Makeup flow to increase and seal injection flow to decrease.

D. Makeup flow to increase, but seal injection flow will not change.

Technical Reference EP 1202-29, Pressurizer System Failure, Rev. 54, Page 11.

Open Exam Reference

Learning Objective V.D.11.01, V.D.11.03 State the Immediate Automatic Actions that occur for the following Pressurizer System Failures per EP 1202-29:
d. Malfunction in Pressurizer Level Indication or Control.
Given a list of symptoms, identify the event, determine what Immediate Automatic Actions will occur and what Immediate Manual Actions are required IAW EP 1202-29.

Question Source ☑ New ☐ TMI Bank TMI Question #
☐ Modified TMI Bank Parent Question #

Question History ☐ Used in Last Two TMI NRC Exams Exam Date
☐ Used in Audit Exam ☐ Used in Training Program Quiz Date

Question Cognitive Level ☐ Memory or Fundamental Knowledge
☑ Comprehension or Analysis

10 CFR Part 55 Content ☑ 55.41 .7 ☐ 55.43 ☑ 55.45 .5, .6

Discriminant Validity Statements

A Plausible because of misconception that PZR level will increase causing MU-V-17 to close, and seal injection flow would increase if makeup flow decreased.

B Plausible because of misconception that PZR level will increase causing MU-V-17 to close, and that seal injection flow would not change with MU-V-32 in HAND.

C Correct answer because MU-V-17 will open causing makeup flow to increase and seal injection flow to decrease with MU-V-32 in HAND.

D Plausible because MU-V-17 will open causing makeup flow to increase, and misconception that seal injection flow would not change with MU-V-32 in HAND.

Comments None.

Form ES-401-6

Written Exam Question Worksheet

Q # 035

Examination Outline Cross-Reference

RO SRO

KA # BWE13 EK1.2 Page 4.3-21 Tier # 1

RO/SRO Importance Rating 3 3.6 Group # 3

Measurement Knowledge of the operational implications of normal, abnormal and emergency operating procedures associated with (EOP Rules): 1210-10 question.

Proposed Question ☑ RO ☑ SRO **Correct Answer** B

A reactor trip from 100% power has occurred.
- All RCPs were tripped 60 minutes ago.
- Steam flow and feedwater flow have been verified.
- Incore thermocouples are tracking T-hot.
- Adequate RCS Subcooled Margin has been verified. DJB

From the list below, identify the ONE (1) set of plant conditions that indicates natural circulation is occurring.

A. OTSG pressure is 700 psig, and decreasing;
RCS Cold Leg temperature is 540° F, and increasing;
RCS Hot Leg temperature is 550° F, and stable.

B. OTSG pressure is 750 psig, and stable;
RCS Cold Leg temperature is 513° F, and stable;
RCS Hot Leg temperature is 545° F, and decreasing.

C. OTSG pressure is 800 psig, and stable;
RCS Cold Leg temperature is 550° F, and decreasing;
RCS Hot Leg temperature is 570° F, and increasing.

D. OTSG pressure is 940 psig, and increasing;
RCS Cold Leg temperature is 540° F, and increasing;
RCS Hot Leg temperature is 600° F, and stable.

Technical Reference ATP 1210-10, Abnormal Transients Rules, Guides and Graphs, Rev 37, Page 11.

Open Exam Reference

Learning Objective ~~V.E 10.01~~ 111.C.09.09 DJB Without the use of ~~ATP 1210-10 Abnormal Transient Rules, Guides and Graphs, be able to recite and explain the rules and the basis of the rules contained in the procedure.~~ DJB

Question Source ☐ New ☐ TMI Bank TMI Question #
☐ Modified TMI Bank Parent Question #

Question History ☑ Used in Last Two TMI NRC Exams Exam Date 1998 TMI SRO
☐ Used in Audit Exam ☐ Used in Training Program Quiz Date

Question Cognitive Level ☐ Memory or Fundamental Knowledge
☑ Comprehension or Analysis

10 CFR Part 55 Content ☑ 55.41 .8, .10 ☐ 55.43 ☑ 55.45 .3

Discriminant Validity Statements

A Plausible distracter since conditions presented indicate natural circulation cooling is not occurring per ATP 1210-10 Natural Circulation Verification guidelines.

B Correct answer.

C Plausible distracter since conditions presented indicate natural circulation cooling may be starting, but do not yet meet ATP 1210-10 Natural Circulation Verification guidelines.

D Plausible distracter since conditions presented indicate natural circulation cooling has not yet been established. Loop delta-T is excessive in accordance with ATP 1210-10 Natural Circulation Verification guidelines.

Comments 1998 TMI SRO Exam Question 87.

Form ES-401-6 **Written Exam Question Worksheet** Q # 038

Examination Outline Cross-Reference RO SRO

KA # SYSTEM 001 K6.11 Page 3.1-8 Tier # 2

RO/SRO Importance Rating 3.1 3.3 Group # 1

Measurement Knowledge of the effect of a loss or malfunction on location and operation of CRDS fault detection (trouble alarms) and reset system, including rod control annunciator: effect of CRD fault detection.

Proposed Question ☑ RO ☑ SRO **Correct Answer** B

Plant conditions:
- Reactor power is 90%.
- ICS in FULL AUTOMATIC.
- RPI is inadvertently selected to RELATIVE at the CRD position indication panel.
- STP for Control Rod Testing has been started.

Group 7 control rod insertion (using the ICS ULD toggle switch) was terminated 8% below the original position; it was discovered that Rod #1 was stuck at its original position (initially aligned with the rest of the group).

Due to a fault detection circuit malfunction, no overhead alarms actuated, and no CRD fault lights energized during Group 7 insertion. From the list below, identify the ONE (1) automatic action that ~~SHOULD~~ HAVE OCCURRED under these conditions. WOULD

A. ICS Asymmetric Rod RUNBACK.

B. Actuate CRD OUT-INHIBIT.

C. Actuate CRD MOTOR FAULT interlock.

D. Energize CRD SYSTEM FAULT lights.

Technical Reference EP 1202-8, CRD Equipment Failure, Rev. 53, Page 3.

Open Exam Reference

Learning Objective IV.E.13.22 Given a set of conditions associated with the CRD system, determine if one of the following conditions exists:
a. Out-Inhibit
b. Sequence Inhibit
c. Auto Inhibit

Question Source ☑ New ☐ TMI Bank TMI Question #
☐ Modified TMI Bank Parent Question #

Question History ☐ Used in Last Two TMI NRC Exams Exam Date
☐ Used in Audit Exam ☐ Used in Training Program Quiz Date

Question Cognitive Level ☐ Memory or Fundamental Knowledge
☑ Comprehension or Analysis

10 CFR Part 55 Content ☑ 55.41 .7 ☐ 55.43 ☑ 55.45 .7

Discriminant Validity Statements

A Plausible misconception regarding ICS Asymmetric Rod Runback logic.

B Correct answer - power is greater than 60% with an asymmetric rod.

C Plausible misconception regarding CRD Motor Fault detection circuit.

D Plausible misconception regarding System Fault logic circuits.

Comments None.

Form ES-401-6

Written Exam Question Worksheet

Q # 039

Examination Outline Cross-Reference

RO SRO

KA # SYSTEM 003 K2.02 Page 3.4-6 Tier # 2

RO/SRO Importance Rating 2.5 2.6 Group # 1

Measurement Knowledge of bus power supplies to CCW pumps: IC-P-1A/1B.

Proposed Question ☑ RO ☑ SRO **Correct Answer** A

Sequence of events:
- MU-P-1A is placed in service for normal makeup and seal injection.
- IC-P-1B is started and IC-P-1A is secured per the On-Line Risk Maintenance Document.
- MU-P-1B is secured for maintenance.

From the list below, identify the ONE (1) phrase that correctly completes the following statement:

IC-P-1A and IC-P-1B are shifted for this makeup pump configuration change to prevent a trip of RC Pumps if a(an) _____ and the standby IC pump fails to start.

A. Loss of the 1D 4KV bus occurs.

B. Loss of the 1E 4KV bus occurs.

C. Loss of station power occurs.

D. Actuation of Emergency Safeguards ~~actuates~~ Actuation occurs.

Technical Reference On-Line Maintenance Risk Management Document #107.

Open Exam Reference

Learning Objective IV.A.09.22 Explain the method of shifting in-service MU Pumps.

Question Source ☑ New ☐ TMI Bank TMI Question #
☐ Modified TMI Bank Parent Question #

Question History ☐ Used in Last Two TMI NRC Exams Exam Date
☐ Used in Audit Exam ☐ Used in Training Program Quiz Date

Question Cognitive Level ☑ Memory or Fundamental Knowledge
☐ Comprehension or Analysis

10 CFR Part 55 Content ☑ 55.41 .7 ☐ 55.43 ☐ 55.45

Discriminant Validity Statements

A Correct answer.

B Plausible because IC-P-1B is powered from 1E 4KV bus.

C Plausible because loss of station power results in UV on 1D & 1E 4KV buses.

D Plausible because this could trip IC-P-1B if 1E bus undervoltage occurred.

Comments None.

Form ES-401-6

Written Exam Question Worksheet

Q # 044

Examination Outline Cross-Reference

RO SRO

KA # SYSTEM 013 A2.01 Page 3.2-26 Tier # 2

RO/SRO Importance Rating 4.6 4.8 Group # 1

Measurement Ability to (a) predict the impact of a LOCA on the ESFAS, and (b) based on those predictions, use procedures to correct, control, or mitigate the consequences; ESAS response to a LOCA - sequence of actuations.

Proposed Question ☑ RO ☑ SRO **Correct Answer** D

Plant conditions:
- Small Break LOCA is in progress.
- RCS pressure is 1500 psig and decreasing.
- Pressurizer level is 120 inches and decreasing.
- Reactor Building pressure is 1.9 psig and increasing.
- MU-P-1A and MU-P-1B are operating.
- MU-V-217 is THROTTLED OPEN.
- Makeup flow rate is 300 gpm .

Identify the ONE (1) statement below that describes required operator actions for this condition.

A. Fully open MU-V-217.

B. Start MU-P-1C AND open MU-V-16A/B/C/D.

C. Depress Train B manual ~~1600~~ psig ESAS button.

D. Depress Train A AND Train B 1600 psig ESAS manual actuation buttons.

Technical Reference ATP 1210-1, Reactor Trip, Rev. 40, Page 4.
ATP 1210-10, Abnormal Transients Rules, Guides and Graphs, Rev. 37, Page 7.

Open Exam Reference

Learning Objective IV.E.24.20 Using console indication, demonstrate or describe the method for manually actuating HPI, RB isolation and cooling or RB high-high pressure ESAS actuation.

Question Source ☑ New ☐ TMI Bank TMI Question #
☐ Modified TMI Bank Parent Question #

Question History ☐ Used in Last Two TMI NRC Exams Exam Date
☐ Used in Audit Exam ☐ Used in Training Program Quiz Date

Question Cognitive Level ☐ Memory or Fundamental Knowledge
☑ Comprehension or Analysis

10 CFR Part 55 Content ☑ 55.41 .5 ☑ 55.43 .5 ☑ 55.45 .3, .13

Discriminant Validity Statements

A Plausible since this would increase inventory, per ATP-1210-1, Reactor Trip.

B Plausible since this would increase inventory, but wouldn't satisfy HPI or ES line up requirements.

C Plausible since this would initiate 1 train of HPI, therefore starting MU-P-1c and opening MU-V-1C/D.

D Correct answer.

Comments None.

Form ES-401-6 **Written Exam Question Worksheet** Q # 045

Examination Outline Cross-Reference RO SRO

KA # SYSTEM 013 K4.11 Page 3.2-25 Tier # 2

RO/SRO Importance Rating 3.2 3.8 Group # 1

Measurement Knowledge of ESAS design feature(s) and/or interlock(s) which provide for vital power load control (Non-ES NR-P trip on ES actuation).

Proposed Question ☑ RO ☑ SRO **Correct Answer** B

Initial conditions:
- Reactor power was 100%.
- NR-P-1A and NR-P-1C were running (both are ES selected).
- NR-P-1B powered from 1T 480V bus and in standby (normal after stop).

Sequence of events:
- Small break LOCA.
- Reactor trip.
- ESAS Actuations: 1600# AND 4#.
- No safety systems have been bypassed or defeated.

From the list below identify the ONE (1) statement that describes NR-P-1B status if NR-P-1A trips under these conditions.

A. NR-P-1B will automatically start.
B. NR-P-1B can be manually started.
C. NR-P-1B ~~will only start~~ if it is ~~ES selected on~~ 1R 480V bus.
D. NR-P-1B ~~will only~~ start if it is ~~powered from~~ the 1R 480V bus.

Technical Reference EP 1202-38, Nuclear Services River Water Failure, Rev. 37, Page 2.

Open Exam Reference

Learning Objective V.D.19.01, V.D.19.02 State Immediate Automatic Actions that occur for a failure of the Nuclear Services River Water system per EP 1202-38. State the Immediate Manual Actions required for a failure of the Nuclear Services River Water per EP 1202-38.

Question Source ☑ New ☐ TMI Bank TMI Question #
☐ Modified TMI Bank Parent Question #

Question History ☐ Used in Last Two TMI NRC Exams Exam Date
☐ Used in Audit Exam ☐ Used in Training Program Quiz Date

Question Cognitive Level ☐ Memory or Fundamental Knowledge
☑ Comprehension or Analysis

10 CFR Part 55 Content ☑ 55.41 .7 ☐ 55.43 ☐ 55.45

Discriminant Validity Statements

A Plausible because it would automatically start with no ES signal present.
B Correct answer.
C Plausible because of ES signal present and NR-P-1A was on 1R 480V bus.
D Plausible because NR-P-1A was powered from 1R 480V bus.

Comments None.

Form ES-401-6

Written Exam Question Worksheet

Q # 048

Examination Outline Cross-Reference RO SRO

KA # SYSTEM 017 K5.02 Page 3.7-11 Tier # 2

RO/SRO Importance Rating 3.7 4 Group # 1

Measurement Knowledge of the operational implications of saturation and subcooling of water concepts applicable to the Incore Temperature Monitor (ITM) system: use of incore thermocouples to determine RCS subcooling margin.

Proposed Question ☑ RO ☑ SRO **Correct Answer** C

Plant conditions:
- Reactor Trip following LOSS OF STATION POWER.
- Current plant parameters:
  - Loop A SCM meter indication = 7 F Loop B SCM meter indication = 12 F.
  - Loop A T-Hot 460 F Loop B T-Hot 455 F.
  - Loop A T-Cold 425 F Loop B T-Cold 425 F.
  - RCS Wide Range Pressure (PI-949A) = 485 psig.
  - Average of the 5 highest operable incore thermocouples (Pt. C4006) = 440 F.

Natural circulation cooling has NOT been confirmed. From the list below, identify the ONE(1) correct value for RCS subcooling margin under these conditions.

New text inserted by Amergen.

App'd

A. 7 degrees F.

B. 12 degrees F.

C. 27 degrees F.

D. 42 degrees F.

Technical Reference ATP 1210-10, Abnormal Transients Rules, Guides and Graphs, Rev. 37, Page 4. Steam Tables.

Open Exam Reference Steam Tables.

Learning Objective V.E.10.08 Given plant condition/status determine what "Rules" of ATP 1210-10 Abnormal Transient Rules, Guides and Graphs, apply and what actions are required to be taken.

Question Source ☑ New ☐ TMI Bank TMI Question #

☐ Modified TMI Bank Parent Question #

Question History ☐ Used in Last Two TMI NRC Exams Exam Date

☐ Used in Audit Exam ☐ Used in Training Program Quiz Date

Question Cognitive Level ☐ Memory or Fundamental Knowledge

☑ Comprehension or Analysis

10 CFR Part 55 Content ☑ 55.41 .5 ☐ 55.43 ☑ 55.45 .7

Discriminant Validity Statements

A Plausible if 460 degrees F is incorrrectly used to determine SCM.

B Plausible if 455 degrees F is incorrectly used to determine SCM.

C Correct answer.

D Plausible if 425 degrees F is incorrectly used to determine SCM.

Comments None.

Form ES-401-6

Written Exam Question Worksheet

Q # 049

Examination Outline Cross-Reference

					RO	SRO
KA #	SYSTEM 022 A2.04	Page	3.5-6	Tier #	2	
RO/SRO Importance Rating	2.9	3.2		Group #	1	

Measurement Ability to predict impact(s) of loss of service water or operations on the CCS and (b) based on those predictions, use procedures to correct, control, or mitigate the consequences of those malfunctions or operations.

Proposed Question ☑ RO ☑ SRO **Correct Answer** C

Plant conditions:
- Reactor trip from 100% power.
- Large break LOCA.
- ATOG immediate actions have been completed.
- RR-P-1A tripped, and can not be restarted.
- RR-P-1B is operating.
- RB pressure and temperature are elevated.
- Pressurizer level indication = 18 inches.

one word

Identify the ONE (1) statement below that describes the EFFECT AND CAUSE for erroneous Pressurizer Level indication under these plant conditions.

A. Level indicates high due to RB depressurization effects by RB spray.

B. Level indicates low due to RB depressurization effects by RB spray.

C. Level indicates high due to boiling in the reference leg.

D. Level indicates low due to boiling in the reference leg.

Technical Reference ATP 1210-10, Abnormal Transients Rules, Guides and Graphs, Rev. 37, Page 9.

Open Exam Reference

Learning Objective IV.E.09.02 Given an NNI instrument and a failure mode, identify how the instrument will respond and what interlock(s) or control function(s) will be affected, including effects on system/component operation.

Question Source ☐ New ☐ TMI Bank TMI Question #
☐ Modified TMI Bank Parent Question #

Question History ☑ Used in Last Two TMI NRC Exams Exam Date 1998 TMI SRO
☐ Used in Audit Exam ☐ Used in Training Program Quiz Date

Question Cognitive Level ☐ Memory or Fundamental Knowledge
☑ Comprehension or Analysis

10 CFR Part 55 Content ☑ 55.41 .5 ☑ 55.43 .5 ☑ 55.45 .13

Discriminant Validity Statements

A Plausible misconception regarding effect of RB depressurization after a LOCA.

B Plausible misconception regarding effect of RB depressurization after a LOCA.

C Correct answer.

D Plausible misconception (opposite effect) of reference leg boiling on level indication.

Comments 1998 TMI SRO Exam Question 37.

Form ES-401-6

Written Exam Question Worksheet

Q # 050

Examination Outline Cross-Reference

					RO	SRO
KA #	SYSTEM 056 A2.04	Page	3.4-39	Tier #	2	
RO/SRO Importance Rating	2.6	2.8		Group #	1	

Measurement Ability to (a) predict the impacts of loss of condensate pumps or operations on the Condensate System and (b) based upon those predictions, use procedures to correct, control, or mitigate the consequences of those malfunctions or operations: impact/actions on loss of Condensate pumps.

Proposed Question ☑ RO ☑ SRO **Correct Answer** B

Plant conditions:
- Plant heatup in progress, RCS temperature is 428 degrees F.
- OTSG 1A/1B pressures are both 330 psig.
- OTSG 1A/1B levels are both 25" on Startup Range.
- FW-V-16A and FW-V-16B are in hand control.
- Startup Feedwater Flow is 0.1E6 lbm per hour to each OTSG.
- CO-P-1A is running, CO-P-1B and CO-P-1C are in Normal After Stop.
- CO-P-2A is operating, CO-P-2B is Out-of-Service, CO-P-2C is in Normal After Stop
- FW-P-1A/1B are both tripped. Operating

From the list below, identify the ONE (1) statement that describes initial startup feedwater flow response if CO-P-2A trips and CO-P-2C does not auto start.

A. Decrease to 0 lbm/hr due to automatic trip of CO-P-1A.

B. Decrease to 0 lbm/hr due to condensate pump operating characteristics.

C. Remain the same.

D. Increase.

Technical Reference OP 1102-1, Plant Heatup to 525 Degrees F, Rev. 152, Pages 9 & 28.
Condensate Pump Flow vs. Dynamic Head Curve, Rev. 4.

Open Exam Reference

Learning Objective IV.C.02.11 Describe the interface between the Condensate System and the following system:
a. Feedwater

Question Source ☑ New ☐ TMI Bank TMI Question #
☐ Modified TMI Bank Parent Question #

Question History ☐ Used in Last Two TMI NRC Exams Exam Date
☐ Used in Audit Exam ☐ Used in Training Program Quiz Date

Question Cognitive Level ☐ Memory or Fundamental Knowledge
☑ Comprehension or Analysis

10 CFR Part 55 Content ☑ 55.41 .5 ☑ 55.43 .5 ☑ 55.45 .3, .13

Discriminant Validity Statements

A Plausible misconception on the pump counting circuit.

B Correct answer.

C Plausible misconception that CO-P-1A will maintain sufficient flow.

D Plausible misconception if examinee thinks CO-P-1B will auto start due to failure of CO-P-2C to start.

Comments None.

Form ES-401-6 **Written Exam Question Worksheet** Q # 061

Examination Outline Cross-Reference RO SRO

KA # SYSTEM 006 A4.06 Page 3.2-20 Tier # 2

RO/SRO Importance Rating 4.4 4.4 Group # 2

Measurement Ability to manually operate and/or monitor in the control room, ESF control panel.

Proposed Question ☑ RO ☑ SRO **Correct Answer** A

Sequence of events:
- Reactor trip from 100%.
- LOCA occurs resulting in 1600 psig RCS and 4 psig RB ES actuations.
- The plant stabilizes at the following parameters:
  - RCS pressure is 1850 psig.
  - RB pressure is 6 psig.
- Shift Supervisor orders 1600 psig and 4 psig ES actuations cleared so HPI can be throttled.

From the list below, identify the ONE (1) statement that describes ~~pushbuttons~~ procedurally required actions ~~to be depressed in order~~ to clear both the 1600 psig and 4 psig actuation automatic signals on both ES train A & B.

A. Depress The three 1600 psig ENABLE & CHANNEL RESET pushbuttons AND two 4 psig DEFEAT pushbuttons.

B. The three 1600 psig ENABLE & CHANNEL RESET pushbuttons AND two 4 psig ENABLE pushbuttons.

C. The three 1600 psig BYPASS pushbuttons AND two 4 psig DEFEAT pushbuttons.

D. The three 1600 psig BYPASS pushbuttons AND two 4 psig ENABLE pushbuttons.

Technical Reference OP 1105-3, Safeguards Actuation System, Rev. 40, Pages 15 & 16.

Open Exam Reference

Learning Objective IV.E.24.16 Using console indication, demonstrate or describe how to bypass, reset or defeat an ESAS auto actuation. This is to include HPI, LPI, RB isolation and cooling, RB high high pressure and reactor trip isolation.

Question Source ☑ New ☐ TMI Bank TMI Question #
☐ Modified TMI Bank Parent Question #

Question History ☐ Used in Last Two TMI NRC Exams Exam Date
☐ Used in Audit Exam ☐ Used in Training Program Quiz Date

Question Cognitive Level ☐ Memory or Fundamental Knowledge
☑ Comprehension or Analysis

10 CFR Part 55 Content ☑ 55.41 .7 ☐ 55.43 ☑ 55.45 .5 to .8

Discriminant Validity Statements

A Correct answer.

B Plausible misconception that 4 psi can be enabled at 6 psi RB pressure.

C Plausible misconception that 1600 psig can be bypassed at 1850 psi following an actuation.

D Plausible misconception 1600 psig can be bypassed at 1850 psi following an actuation and 4 psi can be enabled at 6 psi RB pressure.

Comments None.

Form ES-401-6

Written Exam Question Worksheet

Q # 062

Examination Outline Cross-Reference

					RO	SRO
KA #	2.4.49	Page	2-16	Tier #	2	
RO/SRO Importance Rating	4	4		Group #	2	

Measurement Ability to perform without reference to procedures those actions that require immediate operation of system components and controls: Pressurizer Pressure Control - EP 1202-29 IAs for pressure control malfunction (PORV).

Proposed Question ☑ RO ☑ SRO **Correct Answer** B

Initial plant conditions:
- Cooldown in progress.
- RCS temperature is 430 degrees F.
- RCS pressure is 690 psig.
- RC-P-1A and RC-P-1C are operating.
- PORV NDTT switch is in AUTO.
- Pressurizer level control is in AUTO maintaining 100 inches.

Sequence of events:
- Plant cooldown was stopped in order to cycle CF-V-1A and CF-V-1B.
- All plant parameters were stabilized.
- Loop A Wide Range T-cold signal FAILED LOW.

From the list below, identify the ONE (1) statement that describes plant response to this situation.

A. RC-P1A AND RC-P-1C BOTH TRIP.

B. RCDT cooling valve IC-V-20 OPENS.

C. Pressurizer level control valve MU-V-17 OPENS.

D. Loop A Subcooling Margin Meter indication INCREASES.

Technical Reference ARP MAP G-1-7, PORV Open (Acoustic), Rev. 8, Pages 1 & 2.
ARP LWDS-1-4, R. C. Drain Tnk. Press. Hi, Rev. 10, Page 1.

Open Exam Reference

Learning Objective IV.A.01.08 State the following concerning the PORV:
a. Setpoints both high and low pressure.
b. NDT switch operation and interlocks.
c. Indication available to the operator to determine PORV position.
d. Function/Purpose of the PORV.

Question Source ☑ New ☐ TMI Bank TMI Question #
☐ Modified TMI Bank Parent Question #

Question History ☐ Used in Last Two TMI NRC Exams Exam Date
☐ Used in Audit Exam ☐ Used in Training Program Quiz Date

Question Cognitive Level ☐ Memory or Fundamental Knowledge
☑ Comprehension or Analysis

10 CFR Part 55 Content ☑ 55.41 .10 ☑ 55.43 .2 ☑ 55.45 ,6

Discriminant Validity Statements

A Plausible misconception that RCPs would automatically trip due to the low temperature signal. There IS a fourth pump STARTING interlock affected by this signal failure.

B Correct answer.

C Plausible misconception that Pressurizer level would decrease.

D Plausible misconception that T-cold is used to compute SCM, rather than T-hot.

Comments None.

Form ES-401-6

Written Exam Question Worksheet

Q # 066

Examination Outline Cross-Reference

RO SRO

KA # SYSTEM 016 K4.03 Page 3.7-10 Tier # 2

RO/SRO Importance Rating 2.8 2.9 Group # 2

Measurement Knowledge of NNIS design feature(s) and/or interlock(s) which provide input to control systems.

Proposed Question ☑ RO ☑ SRO **Correct Answer** D

Initial plant conditions:
- Reactor power is 100%.
- ICS is in FULL AUTOMATIC.

RCS Loop A flow is slowly failing low and a SASS Mismatch alarm occurs but there is NO SASS actuation. Total RCS Flow signal to ICS is normal.

From the list below, identify the ONE (1) set of ICS Hand/Auto Stations that is required to be transferred to hand to mitigate the consequence of this event.

A. A Feedwater Pump AND A Startup & Main Feedwater Valves.

B. A & B Feedwater Loop Masters.

C. A & B Main AND Startup Feedwater Valves.

D. A & B Feedwater Pumps AND A & B Main & Startup Feedwater Valves.

Technical Reference ICS Print D553731, Feedwater Control Analog Logic, Rev. Q.

Open Exam Reference

Learning Objective IV.E.27.60 Given a set of plant conditions, determine the correct ICS response and any actions that must be taken if the ICS response is incorrect.

Question Source ☑ New ☐ TMI Bank TMI Question #
☐ Modified TMI Bank Parent Question #

Question History ☐ Used in Last Two TMI NRC Exams Exam Date
☐ Used in Audit Exam ☐ Used in Training Program Quiz Date

Question Cognitive Level ☐ Memory or Fundamental Knowledge
☑ Comprehension or Analysis

10 CFR Part 55 Content ☑ 55.41 .7 ☐ 55.43 ☐ 55.45

Discriminant Validity Statements

A Plausible misconception since the failure is an 'A' input to ICS.

B Plausible misconception that Feedwater Loop Masters would eliminate the bad signal.

C Plausible misconception that controlling the feedwater valves would mitigate the event.

D Correct answer.

Comments None.

Form ES-401-6

Written Exam Question Worksheet

Q # 069

Examination Outline Cross-Reference

RO SRO

KA # SYSTEM 033 A3.02 Page 3.8-10 Tier # 2

RO/SRO Importance Rating 2.9 3.1 Group # 2

Measurement Ability to monitor automatic operation of the Spent Fuel Pool Cooling System including spent fuel leak or rupture.

Proposed Question ☑ RO ☑ SRO **Correct Answer** C

Plant conditions:
- Reactor power is 100%.
- SF-P-1A Spent Fuel Cooling Pump is operating in recirc mode.
- SF-P-2 Borated Water Recirc Pump is operating for Pool A (LWDS) cleanup.
- Spent fuel assembly rack location change in progress in Spent Fuel Pool A.

Due to equipment failure, ~~the~~ a spent fuel assembly is dropped – lying on top of the fuel racks in Pool A. Fuel pin clad rupture has resulted in significant activity release to the spent fuel pool water.

Identify the ONE (1) statement below that describes plant design response to RM-L-5 indication which pegs high due to the increase in radioactivity described above.

A. SF-P-2 trips.

B. SF-P-1A trips.

C. MAP C-1-1 RADIATION LEVEL HIGH actuates.

D. MAP C-1-1 RADIATION LEVEL HIGH actuates AND Fuel Handling Building Supply Fan, AH-E-10, trips.

Technical Reference ARP MAP C-1-1, Radiation Level Hi, Rev. 20, Page 53.

Open Exam Reference

Learning Objective IV.E.06.04 Given an RMS channel, state the interlocks associated with a channel in the Radiation Monitoring system.

Question Source ☑ New ☐ TMI Bank TMI Question #
☐ Modified TMI Bank Parent Question #

Question History ☐ Used in Last Two TMI NRC Exams Exam Date
☐ Used in Audit Exam ☐ Used in Training Program Quiz Date

Question Cognitive Level ☑ Memory or Fundamental Knowledge
☐ Comprehension or Analysis

10 CFR Part 55 Content ☑ 55.41 .7 ☐ 55.43 ☑ 55.45 .5

Discriminant Validity Statements

A Plausible misconception that LWDS cleanup flow should be automatically terminated to minimize plant personnel radiation exposures due to contamination of LWDS cation demineralizer resins.

B Plausible misconception that liquid flow out of the spent fuel pool should be terminated to limit curie transport out of the spent fuel pool in order to minimize plant personnel radiation exposures.

C Correct answer.

D Plausible misconception that air flow out of the spent fuel handling area should be minimized to reduce plant personnel radiation exposures.

Comments None.

Form ES-401-6

Written Exam Question Worksheet

Q # 083

Examination Outline Cross-Reference

RO SRO

KA # SYSTEM 034 A1.02 Page 3.8-13 Tier # 2

RO/SRO Importance Rating 2.9 3.7 Group # 3

Measurement Ability to predict and/or monitor changes in parameters (to prevent exceeding design limits) associated with operating the Fuel Handling System controls, including water level in the refueling canal: FH actions for refueling canal low level.

Proposed Question ☑ RO ☑ SRO **Correct Answer** D

A fuel assembly has just been lifted from the up ender and is transitioning to the core to be placed in core position H-8. The assembly is currently 2 feet away from the up ender when spent fuel pool level is observed do be dropping at 10 inches per minute.

From the list below, identify the ONE (1) statement that describes the procedurally required disposition of the fuel assembly.

A. Placed in core position H-8.

B. Placed in the nearest available core location.

C. Placed in the up ender to be returned to the Spent Fuel Pool.

D. Lowered between the plenum and the up ender until it just touches the floor.

Technical Reference AbP 1203-43, Transfer Canal Seal Plate Gasket Failure/Level Loss, Rev. 6, Page 2.

Open Exam Reference

Learning Objective V.C.16.02 State the required Immediate Manual Actions for a failure of the fuel transfer canal seal plate per AP 1203-43.

Question Source ☑ New ☐ TMI Bank TMI Question #

☐ Modified TMI Bank Parent Question #

Question History ☐ Used in Last Two TMI NRC Exams Exam Date

☐ Used in Audit Exam ☐ Used in Training Program Quiz Date

Question Cognitive Level ☑ Memory or Fundamental Knowledge

☐ Comprehension or Analysis

10 CFR Part 55 Content ☑ 55.41 .5 ☐ 55.43 ☑ 55.45 .5

Discriminant Validity Statements

A Plausible since this is where the assembly belongs.

B Plausible since this is an immediate action if the assembly is closer to the core.

C Plausible since the Spent Fuel Pool is an alternate storage location.

D Correct answer.

Comments None.

App'd by Bissett

#88 Fix-up

From the list below, identify the ONE (1) statement that describes the requirements for performing an Independent Verification for an easily accessible manual valve that is required to be closed.

a. One individual closes the valve, second individual verifies from an independent remote position DEMAND indicator that the valve closed.

b. One individual closes the valve, second individual independently uses a remote POSITION indicator to verify the valve is closed.

c. One individual closes the valve, second individual independently verifies the valve is closed by physically turning in the closed direction.

d. One individual closes the valve, while the second individual visually observes the first individual closing the valve.

a. Plausible misconception that use of DEMAND indication is an acceptable means of position verification.

b. Plausible misconception that use of remote position indication is acceptable for manual valves with easy access.

c. Correct answer.

d. Plausible distracter since this is procedurally acceptable for valves which are not easily accessed.

Form ES-401-6

Written Exam Question Worksheet

Q # 088

Examination Outline Cross-Reference

RO SRO

KA # Conduct of Operations 2.1.29 Page 2-4 Tier # 3

RO/SRO Importance Rating 3.4 3.3 Group # 1

Measurement Knowledge of how to conduct and verify valve lineups: performance of valve lineup - independent verification of valve position.

Proposed Question ☑ RO ☑ SRO **Correct Answer** C

From the list below, identify the ONE (1) statement that describes the requirements for performing an Independent Verification for an open valve (located in a HIGH RADIATION AREA) that is required to be closed.

A. One individual closes the valve, SECOND individual verifies from an independent remote position DEMAND indicator that the valve closed.

B. One individual closes the valve, SAME individual independently uses a remote position DEMAND indicator to verify valve is closed.

C. One individual closes valve, SECOND individual independently verifies the valve is closed locally.

D. One individual closes valve locally, SAME individual verifies from an independent remote POSITION indicator that the valve is closed.

Technical Reference AP 1067, Independent Verification Program, Rev. 28, Page 5.

Open Exam Reference

Learning Objective V.J.01.02 State how valve position must be verified for valves without remote position indication/ and state when valve position may be verified by remote indication - according to AP 1067 Independent Verification.

Question Source ☐ New ☐ TMI Bank TMI Question #

☐ Modified TMI Bank Parent Question #

Question History ☑ Used in Last Two TMI NRC Exams Exam Date 1998 TMI SRO

☐ Used in Audit Exam ☐ Used in Training Program Quiz Date

Question Cognitive Level ☑ Memory or Fundamental Knowledge

☐ Comprehension or Analysis

10 CFR Part 55 Content ☑ 55.41 .10 ☐ 55.43 ☑ 55.45 .1, .12

Discriminant Validity Statements

A Plausible distracter since two individuals are used but includes misconception that use of DEMAND indication is an acceptable means of verification.

B Plausible distracter since this provides two independent means of position verification (misconception that use of DEMAND indication is acceptable) is employed – even though performed by the same individual.

C Correct answer.

D Plausible distracter since this provides two valid independent means of position verification (misconception that this is acceptable even though performed by the same individual).

Comments 1998 TMI SRO Exam Question 33.

Form ES-401-6

Written Exam Question Worksheet

Q # 092

Examination Outline Cross-Reference

RO SRO

KA # Conduct of Operations 2.1.30 Page 2-4 Tier # 3

RO/SRO Importance Rating 3.9 3.4 Group # 1

Measurement Ability to locate and operate components, including local controls: Conduct of operations - local manual operation of MOV.

Proposed Question ☑ RO ☑ SRO **Correct Answer** C

From the list ~~provided~~ below, identify the ONE (1) witness required when hand-cranking a motor operated ESAS valve.

A. Licensed Reactor Operator.

B. Member of Plant Engineering staff.

C. ~~Shift Supervisor~~ / Shift Foreman.

D. Shift Technical Advisor.

Technical Reference AP 1029, Conduct of Operations, Rev. 71, Page 28.

Open Exam Reference

Learning Objective V.A.10.16 Identify/explain the requirements for hand cranking motor operated valves to stop valve seat or stem leakage, as delineated in AP 1029, Conduct of Operations.

Question Source ☐ New ☐ TMI Bank TMI Question #

☐ Modified TMI Bank Parent Question #

Question History ☑ Used in Last Two TMI NRC Exams Exam Date 1995 TMI RO

☐ Used in Audit Exam ☐ Used in Training Program Quiz Date

Question Cognitive Level ☑ Memory or Fundamental Knowledge

☐ Comprehension or Analysis

10 CFR Part 55 Content ☑ 55.41 .7 ☐ 55.43 ☑ 55.45 .7

Discriminant Validity Statements

A Plausible misconception since this person holds an active NRC license.

B Plausible misconception regarding systems engineering SME support.

C Correct answer.

D Plausible misconception regarding shift engineering support.

Comments 1995 TMI RO Exam Question 20.

Form ES-401-6

Written Exam Question Worksheet

Q # 095

Examination Outline Cross-Reference

RO SRO

KA # Equipment Control 2.2.13 Page 2-6 Tier # 3

RO/SRO Importance Rating 3.6 3.8 Group # 2

Measurement Knowledge of tagging and clearance procedures: equipment control - approval requirements for operation of blue-tagged equipment.

Proposed Question ☑ RO ☑ SRO **Correct Answer** C

In addition to the person having clearance, identify ONE (1) specific person whose approval is required prior to changing the condition or position of BLUE tagged ES equipment (SINGLE manipulation).

A. Director, Operations and Maintenance.

B. Plant Operations Director.

C. Duty Shift Supervisor/~~Shift Foreman.~~ DJB

D. Licensed Control Room Operator.

Technical Reference AP 1002, Rules for Protection of Employees Working on Electrical and Mechanical Apparatus, Rev. 85, Page 9.

Open Exam Reference

Learning Objective V.A.01.02 State whose permission is required to change the position/condition of blue tagged equipment IAW AP 1002.

Question Source ☐ New ☐ TMI Bank TMI Question #

☐ Modified TMI Bank Parent Question #

Question History ☑ Used in Last Two TMI NRC Exams Exam Date 1998 TMI SRO

☐ Used in Audit Exam ☐ Used in Training Program Quiz Date

Question Cognitive Level ☑ Memory or Fundamental Knowledge

☐ Comprehension or Analysis

10 CFR Part 55 Content ☑ 55.41 .10 ☐ 55.43 ☑ 55.45 .13

Discriminant Validity Statements

A A plausible misconception as this is a senior management official.

B A plausible misconception as this is a senior management official.

C Correct answer.

D Plausible misconception since this individual is licensed by the NRC.

Comments 1998 TMI SRO Exam Question 11.

Form ES-401-6

Written Exam Question Worksheet

Q # 095

Examination Outline Cross-Reference RO SRO

KA # Equipment Control 2.2.13 Page 2-6 Tier # 3

RO/SRO Importance Rating 3.6 3.8 Group # 2

Measurement Knowledge of tagging and clearance procedures: equipment control - approval requirements for operation of blue-tagged equipment.

Proposed Question ☑ RO ☑ SRO **Correct Answer** C

In addition to the person having clearance, identify ONE (1) specific person whose approval is required prior to changing the condition or position of BLUE tagged ES equipment (SINGLE manipulation).

A. Director, Operations and Maintenance. → Plant Mgr DJB 1/19/00

B. Plant Operations Director. → Dir, OPS. DJB 1/19/00

C. Duty Shift Supervisor.

D. Licensed Control Room Operator.

Technical Reference AP 1002, Rules for Protection of Employees Working on Electrical and Mechanical Apparatus, Rev. 85, Page 9.

Open Exam Reference

Learning Objective V.A.01.02 State whose permission is required to change the position/condition of blue tagged equipment IAW AP 1002.

Question Source ☐ New ☐ TMI Bank TMI Question #

☐ Modified TMI Bank Parent Question #

Question History ☑ Used in Last Two TMI NRC Exams Exam Date 1998 TMI SRO

☐ Used in Audit Exam ☐ Used in Training Program Quiz Date

Question Cognitive Level ☑ Memory or Fundamental Knowledge

☐ Comprehension or Analysis

10 CFR Part 55 Content ☑ 55.41 .10 ☐ 55.43 ☑ 55.45 .13

Discriminant Validity Statements

A A plausible misconception as this is a senior management official.

B A plausible misconception as this is a senior management official.

C Correct answer.

D Plausible misconception since this individual is licensed by the NRC.

Comments 1998 TMI SRO Exam Question 11.

Form ES-401-6

Written Exam Question Worksheet

Q # 097

Examination Outline Cross-Reference

RO SRO

KA # Radiation Control 2.3.1 Page 2-9 Tier # 3

RO/SRO Importance Rating 2.6 3 Group # 3

Measurement Knowledge of 10 CFR 20 and related facility radiation control requirements: radiation control - approval requirements for emergency condition exposures in excess of normal limits.

Proposed Question ☑ RO ☑ SRO **Correct Answer** B

Identify the ONE (1) statement that describes the minimum requirement(s) for an individual to be allowed to receive a TEDE dose ~~greater than 4000~~ of 4100 mRem per year, excluding a planned special exposure.

A. A special RWP is written covering the individual to be permitted to exceed 4000 mRem.

B. Approvals from the Radcon/Environmental Health & Safety Director AND the Site Director.

C. Approval from the President of the Company.

D. Notification of the NRC.

Technical Reference GET Radiation Worker Training Handout, Rev. 5, Page 14.

Open Exam Reference

Learning Objective III.F.02.01 State the Federal and TMI-1 Administrative Limits on Radiation Exposure at TMI-1 for whole body, skin and extremities.

Question Source ☐ New ☐ TMI Bank TMI Question #

☐ Modified TMI Bank Parent Question #

Question History ☑ Used in Last Two TMI NRC Exams Exam Date 1998 TMI SRO

☐ Used in Audit Exam ☐ Used in Training Program Quiz Date

Question Cognitive Level ☑ Memory or Fundamental Knowledge

☐ Comprehension or Analysis

10 CFR Part 55 Content ☑ 55.41 .12 ☑ 55.43 .4 ☑ 55.45 .9, .10

Discriminant Validity Statements

A Plausible misconception that a special RWP would permit additional exposure.

B Correct answer.

C Plausible misconception since this individual is required to pre-approve exposures in excess of 4500 mRem.

D Plausible misconception that the NRC could authorize additional exposure.

Comments 1998 TMI SRO Exam Question 6.

Form ES-401-6

Written Exam Question Worksheet

Q # 062

Examination Outline Cross-Reference RO SRO

KA # 2.4.49 Page 2-16 Tier # 2

RO/SRO Importance Rating 4 4 Group # 2

Measurement Ability to perform without reference to procedures those actions that require immediate operation of system components and controls: Pressurizer Pressure Control - EP 1202-29 IAs for pressure control malfunction (PORV).

Proposed Question ☑ RO ☑ SRO **Correct Answer** B

Initial plant conditions:
- Cooldown in progress.
- RCS temperature is 430 degrees F.
- RCS pressure is 690 psig.
- RC-P-1A and RC-P-1C are operating.
- PORV NDTT switch is in AUTO.
- Pressurizer level control is in AUTO maintaining 100 inches.

Sequence of events:
- Plant cooldown was stopped in order to cycle CF-V-1A and CF-V-1B.
- All plant parameters were stabilized.
- Loop A Wide Range T-cold signal FAILED LOW.

From the list below, identify the ONE (1) statement that describes plant response to this situation.

A. RC-P1A AND RC-P-1C BOTH TRIP.

B. RCDT cooling valve IC-V-20 OPENS.

C. Pressurizer level control valve MU-V-17 OPENS.

D. Loop A Subcooling Margin Meter indication INCREASES.

Technical Reference ARP MAP G-1-7, PORV Open (Acoustic), Rev. 8, Pages 1 & 2.
ARP LWDS-1-4, R. C. Drain Tnk. Press. Hi, Rev. 10, Page 1.

Open Exam Reference

Learning Objective IV.A.01.08 State the following concerning the PORV:
a. Setpoints both high and low pressure.
b. NDT switch operation and interlocks.
c. Indication available to the operator to determine PORV position.
d. Function/Purpose of the PORV.

Question Source ☑ New ☐ TMI Bank TMI Question #
☐ Modified TMI Bank Parent Question #

Question History ☐ Used in Last Two TMI NRC Exams Exam Date
☐ Used in Audit Exam ☐ Used in Training Program Quiz Date

Question Cognitive Level ☐ Memory or Fundamental Knowledge
☑ Comprehension or Analysis

10 CFR Part 55 Content ☑ 55.41 .10 ☑ 55.43 .2 ☑ 55.45 ,6

Discriminant Validity Statements

A Plausible misconception that RCPs would automatically trip due to the low temperature signal. There IS a fourth pump STARTING interlock affected by this signal failure.

B Correct answer.

C Plausible misconception that Pressurizer level would decrease.

D Plausible misconception that T-cold is used to compute SCM, rather than T-hot.

Comments None.

Form ES-401-6

Written Exam Question Worksheet

Q # 066

Examination Outline Cross-Reference RO SRO

KA # SYSTEM 016 K4.03 Page 3.7-10 Tier # 2

RO/SRO Importance Rating 2.8 2.9 Group # 2

Measurement Knowledge of NNIS design feature(s) and/or interlock(s) which provide input to control systems.

Proposed Question ☑ RO ☑ SRO **Correct Answer** D

Initial plant conditions:
- Reactor power is 100%.
- ICS is in FULL AUTOMATIC.

RCS Loop A flow is slowly failing low and a SASS Mismatch alarm occurs but there is NO SASS actuation. Total RCS Flow signal to ICS is normal.

From the list below, identify the ONE (1) set of ICS Hand/Auto Stations that is required to be transferred to hand to mitigate the consequence of this event.

A. A Feedwater Pump AND A Startup & Main Feedwater Valves.

B. A & B Feedwater Loop Masters.

C. A & B Startup AND Main Feedwater Valves.

D. A & B Feedwater Pumps AND A & B Startup & Main Feedwater Valves.

Technical Reference ICS Print D553731, Feedwater Control Analog Logic, Rev. Q.

Open Exam Reference

Learning Objective IV.E.27.60 Given a set of plant conditions, determine the correct ICS response and any actions that must be taken if the ICS response is incorrect.

Question Source ☑ New ☐ TMI Bank TMI Question #
☐ Modified TMI Bank Parent Question #

Question History ☐ Used in Last Two TMI NRC Exams Exam Date
☐ Used in Audit Exam ☐ Used in Training Program Quiz Date

Question Cognitive Level ☐ Memory or Fundamental Knowledge
☑ Comprehension or Analysis

10 CFR Part 55 Content ☑ 55.41 .7 ☐ 55.43 ☐ 55.45

Discriminant Validity Statements

A Plausible misconception since the failure is an 'A' input to ICS.

B Plausible misconception that Feedwater Loop Masters would eliminate the bad signal.

C Plausible misconception that controlling the feedwater valves would mitigate the event.

D Correct answer.

Comments None.

Form ES-401-6

Written Exam Question Worksheet

Q # 069

Examination Outline Cross-Reference RO SRO

KA # SYSTEM 033 A3.02 Page 3.8-10 Tier # 2

RO/SRO Importance Rating 2.9 3.1 Group # 2

Measurement Ability to monitor automatic operation of the Spent Fuel Pool Cooling System including spent fuel leak or rupture.

Proposed Question ☑ RO ☑ SRO **Correct Answer** C

Plant conditions:
- Reactor power is 100%.
- SF-P-1A Spent Fuel Cooling Pump is operating in recirc mode.
- SF-P-2 Borated Water Recirc Pump is operating for Pool A (LWDS) cleanup.
- Spent fuel assembly rack location change in progress in Spent Fuel Pool A.

Due to equipment failure, a spent fuel assembly is dropped – lying on top of the fuel racks in Pool A. Fuel pin clad rupture has resulted in significant activity release to the spent fuel pool water.

Identify the ONE (1) statement below that describes plant design response to RM-L-5 indication, which pegs high due to the increase in radioactivity described above.

A. SF-P-2 trips.

B. SF-P-1A trips.

C. MAP C-1-1 RADIATION LEVEL HIGH actuates.

D. MAP C-1-1 RADIATION LEVEL HIGH actuates AND Fuel Handling Building Supply Fan, AH-E-10, trips.

Technical Reference ARP MAP C-1-1, Radiation Level Hi, Rev. 20, Page 53.

Open Exam Reference

Learning Objective IV.E.06.04 Given an RMS channel, state the interlocks associated with a channel in the Radiation Monitoring system.

Question Source ☑ New ☐ TMI Bank TMI Question #
☐ Modified TMI Bank Parent Question #

Question History ☐ Used in Last Two TMI NRC Exams Exam Date
☐ Used in Audit Exam ☐ Used in Training Program Quiz Date

Question Cognitive Level ☑ Memory or Fundamental Knowledge
☐ Comprehension or Analysis

10 CFR Part 55 Content ☑ 55.41 .7 ☐ 55.43 ☑ 55.45 .5

Discriminant Validity Statements

A Plausible misconception that LWDS cleanup flow should be automatically terminated to minimize plant personnel radiation exposures due to contamination of LWDS cation demineralizer resins.

B Plausible misconception that liquid flow out of the spent fuel pool should be terminated to limit curie transport out of the spent fuel pool in order to minimize plant personnel radiation exposures.

C Correct answer.

D Plausible misconception that air flow out of the spent fuel handling area should be minimized to reduce plant personnel radiation exposures.

Comments None.

Form ES-401-6

Written Exam Question Worksheet

Q # 083

Examination Outline Cross-Reference RO SRO

KA # SYSTEM 034 A1.02 Page 3.8-13 Tier # 2

RO/SRO Importance Rating 2.9 3.7 Group # 3

Measurement Ability to predict and/or monitor changes in parameters (to prevent exceeding design limits) associated with operating the Fuel Handling System controls, including water level in the refueling canal: FH actions for refueling canal low level.

Proposed Question ☑ RO ☑ SRO **Correct Answer** D

A fuel assembly has just been lifted from the upender and is transitioning to the core to be placed in core position H-8. The assembly is currently 2 feet away from the upender when spent fuel pool level is observed do be dropping at 10 inches per minute.

From the list below, identify the ONE (1) statement that describes the procedurally required disposition of the fuel assembly.

A. Placed in core position H-8.

B. Placed in the nearest available core location.

C. Placed in the upender to be returned to the Spent Fuel Pool.

D. Lowered between the plenum and the upender until it just touches the floor.

Technical Reference AbP 1203-43, Transfer Canal Seal Plate Gasket Failure/Level Loss, Rev. 6, Page 2.

Open Exam Reference

Learning Objective V.C.16.02 State the required Immediate Manual Actions for a failure of the fuel transfer canal seal plate per AP 1203-43.

Question Source ☑ New ☐ TMI Bank TMI Question #

☐ Modified TMI Bank Parent Question #

Question History ☐ Used in Last Two TMI NRC Exams Exam Date

☐ Used in Audit Exam ☐ Used in Training Program Quiz Date

Question Cognitive Level ☑ Memory or Fundamental Knowledge

☐ Comprehension or Analysis

10 CFR Part 55 Content ☑ 55.41 .5 ☐ 55.43 ☑ 55.45 .5

Discriminant Validity Statements

A. Plausible since this is where the assembly belongs.

B Plausible since this is an immediate action if the assembly is closer to the core.

C Plausible since the Spent Fuel Pool is an alternate storage location.

D Correct answer.

Comments None.

Form ES-401-6

Written Exam Question Worksheet

Q # 088

Examination Outline Cross-Reference RO SRO

KA # Conduct of Operations 2.1.29 Page 2-4 Tier # 3

RO/SRO Importance Rating 3.4 3.3 Group # 1

Measurement Knowledge of how to conduct and verify valve lineups: performance of valve lineup - independent verification of valve position.

Proposed Question ☑ RO ☑ SRO **Correct Answer** C

From the list below, identify the ONE (1) statement that describes the requirements for performing an Independent Verification for an easily accessible manual valve that is required to be closed.

A. One individual closes the valve, second individual verifies from an independent remote position DEMAND indicator that the valve closed.

B. One individual closes the valve, second individual independently uses a remote POSITION indicator to verify the valve is closed.

C. One individual closes the valve, second individual independently verifies the valve is closed by physically turning in the closed direction.

D. One individual closes the valve, while the second individual visually observes the first individual closing the valve.

Technical Reference AP 1067, Independent Verification Program, Rev. 28, Page 5.

Open Exam Reference

Learning Objective V.J.01.02 State how valve position must be verified for valves without remote position indication/ and state when valve position may be verified by remote indication - according to AP 1067 Independent Verification.

Question Source ☐ New ☐ TMI Bank TMI Question #
☐ Modified TMI Bank Parent Question #

Question History ☑ Used in Last Two TMI NRC Exams Exam Date 1998 TMI SRO
☐ Used in Audit Exam ☐ Used in Training Program Quiz Date

Question Cognitive Level ☑ Memory or Fundamental Knowledge
☐ Comprehension or Analysis

10 CFR Part 55 Content ☑ 55.41 .10 ☐ 55.43 ☑ 55.45 .1, .12

Discriminant Validity Statements

A Plausible misconception that use of DEMAND indication is an acceptable means of position verification.

B Plausible misconception that use of remote position indication is acceptable for manual valves with easy access.

C Correct answer.

D Plausible distracter since this is procedurally acceptable for valves which are not easily accessed.

Comments 1998 TMI SRO Exam Question 33.

Form ES-401-6

Written Exam Question Worksheet

Q # 092

Examination Outline Cross-Reference RO SRO

KA # Conduct of Operations 2.1.30 Page 2-4 Tier # 3

RO/SRO Importance Rating 3.9 3.4 Group # 1

Measurement Ability to locate and operate components, including local controls: Conduct of operations - local manual operation of MOV.

Proposed Question ☑ RO ☑ SRO **Correct Answer** C

From the list below, identify the ONE (1) witness required when hand-cranking a motor operated ESAS valve.

A. Licensed Reactor Operator.

B. Member of Plant Engineering staff.

C. Shift Foreman.

D. Shift Technical Advisor.

Technical Reference AP 1029, Conduct of Operations, Rev. 71, Page 28.

Open Exam Reference

Learning Objective V.A.10.16 Identify/explain the requirements for hand cranking motor operated valves to stop valve seat or stem leakage, as delineated in AP 1029, Conduct of Operations.

Question Source ☐ New ☐ TMI Bank TMI Question #

☐ Modified TMI Bank Parent Question #

Question History ☑ Used in Last Two TMI NRC Exams Exam Date 1995 TMI RO

☐ Used in Audit Exam ☐ Used in Training Program Quiz Date

Question Cognitive Level ☑ Memory or Fundamental Knowledge

☐ Comprehension or Analysis

10 CFR Part 55 Content ☑ 55.41 .7 ☐ 55.43 ☑ 55.45 .7

Discriminant Validity Statements

A Plausible misconception since this person holds an active NRC license.

B Plausible misconception regarding systems engineering SME support.

C Correct answer.

D Plausible misconception regarding shift engineering support.

Comments 1995 TMI RO Exam Question 20.

Form ES-401-6

Written Exam Question Worksheet

Q # 095

Examination Outline Cross-Reference RO SRO

KA # Equipment Control 2.2.13 Page 2-6 Tier # 3

RO/SRO Importance Rating 3.6 3.8 Group # 2

Measurement Knowledge of tagging and clearance procedures: equipment control - approval requirements for operation of blue-tagged equipment.

Proposed Question ☑ RO ☑ SRO **Correct Answer** C

In addition to the person having clearance, identify ONE (1) specific person whose approval is required prior to changing the condition or position of BLUE tagged ES equipment (SINGLE manipulation).

A. Plant Manager.

B. Director, Operations.

C. Duty Shift Supervisor.

D. Licensed Control Room Operator.

Technical Reference AP 1002, Rules for Protection of Employees Working on Electrical and Mechanical Apparatus, Rev. 85, Page 9.

Open Exam Reference

Learning Objective V.A.01.02 State whose permission is required to change the position/condition of blue tagged equipment IAW AP 1002.

Question Source ☐ New ☐ TMI Bank TMI Question #

☐ Modified TMI Bank Parent Question #

Question History ☑ Used in Last Two TMI NRC Exams Exam Date 1998 TMI SRO

☐ Used in Audit Exam ☐ Used in Training Program Quiz Date

Question Cognitive Level ☑ Memory or Fundamental Knowledge

☐ Comprehension or Analysis

10 CFR Part 55 Content ☑ 55.41 .10 ☐ 55.43 ☑ 55.45 .13

Discriminant Validity Statements

A A plausible misconception as this is a senior management official.

B A plausible misconception as this is a senior management official.

C Correct answer. Shift Supervisor title was recently changed to Shift Manager - procedure updates are not complete.

D Plausible misconception since this individual is licensed by the NRC.

Comments 1998 TMI SRO Exam Question 11. Shift Supervisor title was recently changed to Shift Manager, Shift Foreman titles were recently changed to Control Room Supervisor and Group Operations Supervisor - procedure updates are not complete.

Form ES-401-6

Written Exam Question Worksheet

Q # 097

Examination Outline Cross-Reference RO SRO

KA # Radiation Control 2.3.1 Page 2-9 Tier # 3

RO/SRO Importance Rating 2.6 3 Group # 3

Measurement Knowledge of 10 CFR 20 and related facility radiation control requirements: radiation control - approval requirements for emergency condition exposures in excess of normal limits.

Proposed Question ☑ RO ☑ SRO **Correct Answer** B

Identify the ONE (1) statement that describes the MINIMUM requirement(s) for an individual to be allowed to receive a TEDE dose of 4100 mRem per year, excluding a planned special exposure.

A. A special RWP is written covering the individual to be permitted to exceed 4000 mRem.

B. Approvals from the Radcon/Environmental Health & Safety Director AND the Site Director.

C. Approval from the President of the Company.

D. Notification of the NRC.

Technical Reference GET Radiation Worker Training Handout, Rev. 5, Page 14.

Open Exam Reference

Learning Objective III.F.02.01 State the Federal and TMI-1 Administrative Limits on Radiation Exposure at TMI-1 for whole body, skin and extremities.

Question Source ☐ New ☐ TMI Bank TMI Question #

☐ Modified TMI Bank Parent Question #

Question History ☑ Used in Last Two TMI NRC Exams Exam Date 1998 TMI SRO

☐ Used in Audit Exam ☐ Used in Training Program Quiz Date

Question Cognitive Level ☑ Memory or Fundamental Knowledge

☐ Comprehension or Analysis

10 CFR Part 55 Content ☑ 55.41 .12 ☑ 55.43 .4 ☑ 55.45 .9, .10

Discriminant Validity Statements

A Plausible misconception that a special RWP would permit additional exposure.

B Correct answer.

C Plausible misconception since this individual is required to pre-approve exposures in excess of 4500 mRem.

D Plausible misconception that the NRC could authorize additional exposure.

Comments 1998 TMI SRO Exam Question 6.
1/19/00 - Edited question stem to specify MINIMUM requirements and 4100 mRem exposure. This positively eliminated distracter C as a potentially correct answer. This individual COULD approve this exposure in the absence of the individuals in the normally correct answer (B). This individual is REQUIRED to approve exposures in excess of 4500 Mrem.

Form ES-401-6

Written Exam Question Worksheet

Q # 006

Examination Outline Cross-Reference RO SRO

KA # APE 027 AK2.03 Page 4.2-20 Tier # 1

RO/SRO Importance Rating 2.6 2.8 Group # 1

Measurement Knowledge of the interrelations between the Pressurizer Pressure Control Malfunctions and the controllers and positioners: Predict/monitor/control effects of Pressurizer pressure control malfunction.

Proposed Question ☑ RO ☑ SRO **Correct Answer** B

Sequence of events:
- Initial reactor power = 90%.
- FW-P-1A trips and an automatic ICS runback is in progress.
- At 2225 psig RCS pressure (still increasing), the selected RCS pressure transmitter fails low (SASS DOES NOT ACTUATE).
- NO manual operations have been performed.

From the list below, identify the ONE (1) group of automatic actions that will occur if this plant situation continues and no operator actions are taken.

A. RC-V-1 CLOSES;
Pressurizer heaters ENERGIZE;
Reactor trips on LOW RCS pressure.

B. RC-V-1 CLOSES;
Pressurizer heaters ENERGIZE;
Reactor trips on HIGH RCS pressure.

C. RC-V-1 remains OPEN;
Pressurizer heaters DE-ENERGIZE;
Reactor trips on HIGH RCS pressure.

D. RC-V-1 remains OPEN;
Pressurizer heaters DE-ENERGIZE;
Reactor trips on LOW RCS pressure.

Technical Reference EP 1202-29, Pressurizer System Failure, Rev. 54, Pages 5 and 7.

Open Exam Reference

Learning Objective V.D.11.03 Given a list of symptoms, identify the event, determine what Immediate Automatic Actions will occur and what Immediate Manual Actions are required IAW EP 1202-29.

Question Source ☑ New ☐ TMI Bank TMI Question #
☐ Modified TMI Bank Parent Question #

Question History ☐ Used in Last Two TMI NRC Exams Exam Date
☐ Used in Audit Exam ☐ Used in Training Program Quiz Date

Question Cognitive Level ☐ Memory or Fundamental Knowledge
☑ Comprehension or Analysis

10 CFR Part 55 Content ☑ 55.41 .7 ☐ 55.43 ☑ 55.45 .7

Discriminant Validity Statements

A Plausible because all actions listed occur in response to an actual decrease in RCS pressure.

B Correct answer. The first two actions result in the third action.

C Plausible because all actions listed occur in response to an actual increase in RCS pressure.

D Plausible because first two actions occur in response to an actual increase in RCS pressure.

Comments None.

Form ES-401-6

Written Exam Question Worksheet

Q # 008

Examination Outline Cross-Reference RO SRO

KA # APE 056 AK1.04 Page 4.2-37 Tier # 1

RO/SRO Importance Rating 3.1 3.2 Group # 1

Measurement Knowledge of the operational implications of the definition of saturation conditions, implications for the systems as applicable to Loss of Offsite Power:

Proposed Question ☑ RO ☑ SRO **Correct Answer** B

Plant conditions:
- A loss of station power has occurred.
- Only the 1D 4KV bus has been re-energized.
- Pressurizer heaters have NOT been energized.
- Pressurizer level is being maintained at 100 inches.
- OTSG levels are being maintained at 50% operating range.
- RCS natural circulation has been obtained and verified.
- RCS Subcooled margin is 50 degrees F.
- Core cooldown rate is 0 degrees F/hour.

From the list below, identify the ONE (1) statement that describes expected RCS Subcooled margin response.

A. Increase as core temperatures decrease.

B. Decrease as Pressurizer temperature decreases.

C. Remain fairly constant with constant Pressurizer level.

D. Remain fairly constant with constant core cooldown rate.

Technical Reference EP 1202-2, Loss of Station Power, Rev. 49, Page 6.

Open Exam Reference

Learning Objective IV.A.01.06 Describe how RCS pressurizer pressure is maintained to include:
a. Heaters and their setpoints.

Question Source ☑ New ☐ TMI Bank TMI Question #
☐ Modified TMI Bank Parent Question #

Question History ☐ Used in Last Two TMI NRC Exams Exam Date
☐ Used in Audit Exam ☐ Used in Training Program Quiz Date

Question Cognitive Level ☐ Memory or Fundamental Knowledge
☑ Comprehension or Analysis

10 CFR Part 55 Content ☑ 55.41 .8, .10 ☐ 55.43 ☑ 55.45 .3

Discriminant Validity Statements

A Plausible because with constant pressure, SCM increases as temperature decreases.

B Correct answer.

C Plausible if Pressurizer heaters were available to maintain Pressurizer temperature.

D Plausible if Pressurizer heaters were available to maintain Pressurizer temperature.

Comments 1/19/00 - Changed last bullet in stem from 5 degrees per hour cooldown rate to 0 degrees per hour to eliminate compound (opposite) effects on RCS Subcooled Margin - pressurizer ambient losses due to loss of Pressurizer Heaters (decreases subcooled margin) and decreasing Thot (increases subcooled margin) with constant Pressurizer level.

Form ES-401-6

Written Exam Question Worksheet

Q # 012

Examination Outline Cross-Reference RO SRO

KA # APE 068 AA1.23 Page 4.2-55 Tier # 1

RO/SRO Importance Rating 4.3 4.4 Group # 1

Measurement Ability to operate and/or monitor manual trip of reactor and turbine as applicable to the Control Room Evacuation.

Proposed Question ☑ RO ☑ SRO **Correct Answer** D

Plant conditions:
- Reactor power is 100%.
- Fire in the Control Room requires immediate evacuation.

Due to degrading Control Room conditions, time is not available to complete ALL Immediate Actions of ATP 1210-1.

From the list below, identify the ONE (1) statement that describes the action(s) procedurally REQUIRED to be completed PRIOR TO LEAVING THE CONTROL ROOM, in accordance with EP 1202-37, Cooldown Outside the Control Room.

A. Start a second Makeup Pump AND Open MU-V-217.

B. Verify Safety System Status.

C. Verify Subcooling Margin exists.

D. Manually trip the Turbine.

Technical Reference EP 1202-37, Cooldown From Outside the Control Room, Rev. 52, Page 2.

Open Exam Reference

Learning Objective V.D.18.02 State and explain the immediate manual actions required for a control room evacuation per EP 1202-37, Cooldown from Outside the Control Room.

Question Source ☑ New ☐ TMI Bank TMI Question #
☐ Modified TMI Bank Parent Question #

Question History ☐ Used in Last Two TMI NRC Exams Exam Date
☐ Used in Audit Exam ☐ Used in Training Program Quiz Date

Question Cognitive Level ☑ Memory or Fundamental Knowledge
☐ Comprehension or Analysis

10 CFR Part 55 Content ☑ 55.41 .7 ☐ 55.43 ☑ 55.45 .5, .6

Discriminant Validity Statements

A Plausible distracter since this is an Immediate Action contained in 1210-1.

B Plausible distracter since this is an Immediate Action contained in 1210-1.

C Plausible distracter since this is an Immediate Action contained in 1210-1.

D Correct answer.

Comments None.

Form ES-401-6

Written Exam Question Worksheet

Q # 015

Examination Outline Cross-Reference RO SRO

KA # EPE E02 AK3.2 Page 4.3-29 Tier # 1

RO/SRO Importance Rating 3.7 4 Group # 1

Measurement Knowledge of the reasons for normal, abnormal and emergency operating procedures associated with Loss of NNI Hand Power.

Proposed Question ☑ RO ☑ SRO **Correct Answer** A

Plant conditions:
- Reactor Power is 42%.
- The following ICS Stations are in HAND due to ICS automatic control problems:
  FW-P-1A, FW-P-1B (FWP flows are matched).
  FW-V-16A, FW-V-16B.
  FW-V-17A, FW-V-17B.
- All other ICS controls are in AUTOMATIC.

LOSS OF ICS HAND POWER occurs, followed immediately by a TURBINE TRIP.

Identify the ONE (1) statement below that describes procedurally required operator action(s) for this situation.

A. Trip the reactor AND trip both Main Feedwater Pumps.

B. Stabilize reactor power equal to Main Feedwater flow.

C. Transfer control of BOTH Feedwater Pumps to the Motor Speed Changers in the Control Room.

D. Transfer BOTH Main Feedwater Pumps to LOCAL SPEED CONTROL at the feedwater pump control panel.

Technical Reference EP 1202-41, Total or Partial Loss of ICS/NNI Hand Power, Rev. 30, Page 3.

Open Exam Reference

Learning Objective V.D.21.03 State the Immediate Manual Actions required for a Total or Partial Loss of ICS/NNI Hand power per EP 1202-41.

Question Source ☑ New ☐ TMI Bank TMI Question #
☐ Modified TMI Bank Parent Question #

Question History ☐ Used in Last Two TMI NRC Exams Exam Date
☐ Used in Audit Exam ☐ Used in Training Program Quiz Date

Question Cognitive Level ☐ Memory or Fundamental Knowledge
☑ Comprehension or Analysis

10 CFR Part 55 Content ☑ 55.41 .5, .10 ☐ 55.43 ☑ 55.45 .6, .13

Discriminant Validity Statements

A Correct answer.

B Plausible since this action would attempt to balance heat production with heat removal.

C Plausible since this is an alternate method of Feedwater pump control but not an immediate manual action allowed by the procedure.

D Plausible since this is an alternate method of Feedwater pump control but not an immediate manual action prescribed by the procedure.

Comments 1/19/00 - Edited stem to specify initial FWP flows are matched to avoid ambiguity regarding FP responses due to loss of Hand Power.

Form ES-401-6

Written Exam Question Worksheet

Q # 016

Examination Outline Cross-Reference RO SRO

KA # APE 040 AK2.01 Page 4.2-31 Tier # 1

RO/SRO Importance Rating 2.6 2.5 Group # 1

Measurement Knowledge of the interrelations between the Steam Line Rupture and valves: valve response to Main Steam line rupture.

Proposed Question ☑ RO ☑ SRO **Correct Answer** A

Sequence of events:
- Reactor power is initially 100%.
- Steam Line Rupture in the Intermediate Building, upstream of MS-V-1C.
- HSPS actuates.
- OTSG 1B depressurizes to 40 psig.

RCS Subcooling Margin is maintained throughout this event. No operator action has been taken to isolate OTSG 1B.

Identify the ONE (1) statement below that describes the response of EF-V-30A, EF-V-30B, EF-V-30C and EF-V-30D under these conditions.

A. EF-V-30A and EF-V-30D remain closed in automatic;
EF-V-30B and EF-V-30C control OTSG 1B level at 25 inches in the Startup Range.

B. EF-V-30A and EF-V-30D remain closed in automatic;
EF-V-30 B and EF-V-30C control OTSG 1B level at 50% in the Operating Range.

C. EF-V-30A and EF-V-30D control OTSG 1A level at 25 inches in the Startup Range;
EF-V-30B and EF-V-30C remain closed due to HSPS (low pressure) actuation.

D. EF-V-30A and EF-V-30D control OTSG 1A level at 25 inches in the Startup Range;
EF-V-30B and EF-V-30C control OTSG 1B level at 25 inches in the Startup Range.

Technical Reference ATOG ATP 1210-10 Abnormal Transients Rules, Guides and Graphs, Rev. 37, OTSG Level Rule 1.6, Pages 5 & 6.
ATP 1210-1, Reactor Trip, Rev. 40, Step 2.7, Page 4.

Open Exam Reference

Learning Objective IV.C.05.26 Given a set of plant conditions, determine whether the EFW system has responded correctly.

Question Source ☑ New ☐ TMI Bank TMI Question #
☐ Modified TMI Bank Parent Question #

Question History ☐ Used in Last Two TMI NRC Exams Exam Date
☐ Used in Audit Exam ☐ Used in Training Program Quiz Date

Question Cognitive Level ☐ Memory or Fundamental Knowledge
☑ Comprehension or Analysis

10 CFR Part 55 Content ☑ 55.41 .7 ☐ 55.43 ☑ 55.45 .7

Discriminant Validity Statements

A Correct answer.

B Plausible distracter if actuation setpoint is misunderstood.

C Plausible distracter if actuation setpoint and HSPS isolation is misunderstood.

D Plausible distracter if HSPS isolation is misunderstood.

Comments None.

Form ES-401-6

Written Exam Question Worksheet

Q # 017

Examination Outline Cross-Reference RO SRO

KA # APE 001 AA2.01 Page 4.2-3 Tier # 1

RO/SRO Importance Rating 4.5 4.8 Group # 2

Measurement Ability to determine and interpret the following as they apply to the Continuous Rod Withdrawal: Reactor Trip Breaker Indication.

Proposed Question ☑ RO ☑ SRO **Correct Answer** C

The Control Room Operator MANUALLY trips the reactor. Identify the ONE (1) situation below that confirms ALL the CRD breakers have OPENED.

A. All rods in CRD Groups 1-7 drop, fully inserted into the core.

B. Alarms G-1-3 (CRD DC Trip Brkr Open) AND G-1-4 (CRD AC Trip Brkr Open) actuate.

C. RPS Breaker Trip Lights on ALL 4 RPS Cabinets are energized.

D. RPS Protective Subsystem Lights on ALL 4 RPS Cabinets are energized.

Technical Reference OPM Section F-02, Reactor Protection System, Rev 8 Page 117

Open Exam Reference

Learning Objective IV.E.14.10 Given the RPS cabinet status and/or CRD Breaker status, determine if a reactor trip has occurred and/or which control rod groups have tripped.

Question Source ☑ New ☐ TMI Bank TMI Question #

☐ Modified TMI Bank Parent Question #

Question History ☐ Used in Last Two TMI NRC Exams Exam Date

☐ Used in Audit Exam ☐ Used in Training Program Quiz Date

Question Cognitive Level ☐ Memory or Fundamental Knowledge

☑ Comprehension or Analysis

10 CFR Part 55 Content ☐ 55.41 ☑ 55.43 .5 ☑ 55.45 .13

Discriminant Validity Statements

A Plausible misconception that all CRD breakers are required to be open in order for all the rods to be de-energized and drop into the core.

B Plausible misconception that this alarm combination confirms that all breakers associated with each alarms have opened. Alarm actuation logic does not require ALL breakers to be open.

C Correct answer.

D Plausible misconception that the RPS Protective Trip lights indicate the associated breaker has opened. These lights energize when the RPS Subsystem Reactor Trip module actuates - rather than actual operation (opening) of CRD breakers.

Comments KA catalog does not address 10 CFR 55.41 for this measurement. Amergen feels 10 CFR 55.41 is applicable to this KA Catalog item for TMI.

Form ES-401-6

Written Exam Question Worksheet

Q # 020

Examination Outline Cross-Reference RO SRO

KA # BWA01 AA1.1 Page 4.3-27 Tier # 1

RO/SRO Importance Rating 3.7 3.7 Group # 2

Measurement Ability to operate and/or monitor components, and functions of control and safety systems, including instrumentation, signals, interlocks, failure modes, and automatic and manual features as applicable to a Plant Runback: actions for ICS Runback failure.

Proposed Question ☑ RO ☑ SRO **Correct Answer** D

Plant conditions:
- Reactor power 85%.
- ICS in full automatic.

Sequence of events:
- FW-P-1A tripped concurrent with a total loss of ICS Hand Power.
- ICS Runback failed to occur.
- The following alarms are actuated:
  - ICS IN TRACK
  - ICS HIGH LOAD LIMITED

From the list below, identify the ONE (1) statement that describes required operator action(s) for this condition.

A. Trip the Reactor/Turbine AND go to ATP 1210-1.

B. Place FW-P-1B in HAND AND increase feedwater flow.

C. Reduce the ULD output demand to 68% (585 MWe) AND verify the plant runs back.

D. Place the SG/Rx Master in HAND AND reduce power to 68% (585 MWe).

Technical Reference ARP MAP H-1-1, ICS Runback, Rev. 19, Page 2.

Open Exam Reference

Learning Objective IV.E.27.60 Given a set of plant conditions, determine the correct ICS response and any actions that must be taken if the ICS response is incorrect.

Question Source ☑ New ☐ TMI Bank TMI Question #
☐ Modified TMI Bank Parent Question #

Question History ☐ Used in Last Two TMI NRC Exams Exam Date
☐ Used in Audit Exam ☐ Used in Training Program Quiz Date

Question Cognitive Level ☐ Memory or Fundamental Knowledge
☑ Comprehension or Analysis

10 CFR Part 55 Content ☑ 55.41 .7 ☐ 55.43 ☑ 55.45 .5, .6

Discriminant Validity Statements

A Plausible distracter since this would result in a reduction in turbine output.

B Plausible distracter since this would attempt to match reactor power and feedwater flow.

C Plausible distracter since this would normally result in a plant power reduction except when ICS Track Alarm is present.

D Correct answer.

Comments 1/19/00 - Edited question stem to specify ICS initially in full automatic. This removes ambiguity regarding initial ICS status, and improves plausibility of distracter C. Edited distracter C, replacing ULD setpoint with ULD output demand to clarify this (incorrect) action.

Form ES-401-6

Written Exam Question Worksheet

Q # 021

Examination Outline Cross-Reference RO SRO

KA # BWA04 AA1.1 Page 4.3-33 Tier # 1

RO/SRO Importance Rating 3.5 3.3 Group # 2

Measurement Ability to operate and/or monitor components, and functions of control and safety systems, including instrumentation, signals, interlocks, failure modes, and automatic and manual features as applicable to a Turbine Trip: actions for turbine trip at low power.

Proposed Question ☑ RO ☑ SRO **Correct Answer** B

Plant conditions:
- Reactor power is 35%, during plant startup.
- All ICS stations in auto EXCEPT FW-P-1A.

Considering these plant conditions, from the list below identify the ONE (1) statement that describes the operational status of the MAIN TURBINE if the main generator breakers trip due to a generator ground fault.

A. Must be manually tripped.

B. Will trip automatically without a time delay.

C. Will trip automatically after a 30 second time delay.

D. Will revert to Speed Control and remain at 1800 RPM.

Technical Reference ARP MAP K-1-1, Turbine Trip, Rev. 18, Page 1.

Open Exam Reference

Learning Objective IV.E.03.08 Given a specific main turbine trip, explain its operation including control signal(s) monitored, setpoint(s) for actuation and any applicable logic to cause the actuation.

Question Source ☑ New ☐ TMI Bank TMI Question #
☐ Modified TMI Bank Parent Question #

Question History ☐ Used in Last Two TMI NRC Exams Exam Date
☐ Used in Audit Exam ☐ Used in Training Program Quiz Date

Question Cognitive Level ☐ Memory or Fundamental Knowledge
☑ Comprehension or Analysis

10 CFR Part 55 Content ☑ 55.41 41.7 ☐ 55.43 ☑ 55.45 .5, .6

Discriminant Validity Statements

A Plausible if misconception that turbine will not automatically trip on generator fault.

B Correct answer.

C Plausible because there is a 30 second delay generator trip following turbine trip.

D Plausible because this is normal turbine control.

Comments None.

Form ES-401-6

Written Exam Question Worksheet

Q # 034

Examination Outline Cross-Reference RO SRO

KA # APE 028 AA1.03 Page 4.2-23 Tier # 1

RO/SRO Importance Rating 2.9 2.9 Group # 3

Measurement Ability to operate and/or monitor RCP and seal water system as applicable to the Pressurizer Level Control Malfunction.

Proposed Question ☑ RO ☑ SRO **Correct Answer** C

Plant conditions:
- Reactor power is 100%.
- MU-P-1B is operating in normal makeup system alignment.
- MU-V-17 is in AUTO with makeup flow at 22 gpm.
- MU-V-32 is in HAND for maintenance with seal injection flow at 38 gpm.

The selected Pressurizer temperature transmitter suddenly fails low.

From the list below, identify the ONE (1) statement that describes makeup and seal injection flow responses to this condition, with no operator action.

A. Makeup flow will decrease and seal injection flow will increase.

B. Makeup flow will decrease, but seal injection flow will not change.

C. Makeup flow will increase and seal injection flow will decrease.

D. Makeup flow will increase, but seal injection flow will not change.

Technical Reference EP 1202-29, Pressurizer System Failure, Rev. 54, Page 11.

Open Exam Reference

Learning Objective V.D.11.01, V.D.11.03 State the Immediate Automatic Actions that occur for the following Pressurizer System Failures per EP 1202-29:
d. Malfunction in Pressurizer Level Indication or Control.
Given a list of symptoms, identify the event, determine what Immediate Automatic Actions will occur and what Immediate Manual Actions are required IAW EP 1202-29.

Question Source ☑ New ☐ TMI Bank TMI Question #
☐ Modified TMI Bank Parent Question #

Question History ☐ Used in Last Two TMI NRC Exams Exam Date
☐ Used in Audit Exam ☐ Used in Training Program Quiz Date

Question Cognitive Level ☐ Memory or Fundamental Knowledge
☑ Comprehension or Analysis

10 CFR Part 55 Content ☑ 55.41 .7 ☐ 55.43 ☑ 55.45 .5, .6

Discriminant Validity Statements

A Plausible because of misconception that PZR level will increase causing MU-V-17 to close, and seal injection flow would increase if makeup flow decreased.

B Plausible because of misconception that PZR level will increase causing MU-V-17 to close, and that seal injection flow would not change with MU-V-32 in HAND.

C Correct answer because MU-V-17 will open causing makeup flow to increase and seal injection flow to decrease with MU-V-32 in HAND.

D Plausible because MU-V-17 will open causing makeup flow to increase, and misconception that seal injection flow would not change with MU-V-32 in HAND.

Comments None.

Form ES-401-6

Written Exam Question Worksheet

Q # 035

Examination Outline Cross-Reference RO SRO

KA # BWE13 EK1.2 Page 4.3-21 Tier # 1

RO/SRO Importance Rating 3 3.6 Group # 3

Measurement Knowledge of the operational implications of normal, abnormal and emergency operating procedures associated with (EOP Rules): 1210-10 question.

Proposed Question ☑ RO ☑ SRO **Correct Answer** B

A reactor trip from 100% power has occurred.
- All RCPs were tripped 60 minutes ago.
- Steam flow and feedwater flow have been verified.
- Incore thermocouples are tracking T-hot.
- Adequate RCS Subcooled Margin has been verified.

From the list below, identify the ONE (1) set of plant conditions that indicates natural circulation is occurring.

A. OTSG pressure is 700 psig, and decreasing;
RCS Cold Leg temperature is 540° F, and increasing;
RCS Hot Leg temperature is 550° F, and stable.

B. OTSG pressure is 750 psig, and stable;
RCS Cold Leg temperature is 513° F, and stable;
RCS Hot Leg temperature is 545° F, and decreasing.

C. OTSG pressure is 800 psig, and stable;
RCS Cold Leg temperature is 550° F, and decreasing;
RCS Hot Leg temperature is 570° F, and increasing.

D. OTSG pressure is 940 psig, and increasing;
RCS Cold Leg temperature is 540° F, and increasing;
RCS Hot Leg temperature is 600° F, and stable.

Technical Reference ATOG ATP 1210-10, Abnormal Transients Rules, Guides and Graphs, Rev. 37, Page 11.

Open Exam Reference

Learning Objective III.C.09.09 Given plant conditions, determine if natural circulation exists per ATP 1210-10 Abnormal Transient Rules, Guides and Graphs.

Question Source ☐ New ☐ TMI Bank TMI Question #
☐ Modified TMI Bank Parent Question #

Question History ☑ Used in Last Two TMI NRC Exams Exam Date 1998 TMI SRO
☐ Used in Audit Exam ☐ Used in Training Program Quiz Date

Question Cognitive Level ☐ Memory or Fundamental Knowledge
☑ Comprehension or Analysis

10 CFR Part 55 Content ☑ 55.41 .8, .10 ☐ 55.43 ☑ 55.45 .3

Discriminant Validity Statements

A Plausible distracter since conditions presented indicate natural circulation cooling is not occurring per ATP 1210-10 Natural Circulation Verification guidelines.

B Correct answer.

C Plausible distracter since conditions presented indicate natural circulation cooling may be starting, but do not yet meet ATP 1210-10 Natural Circulation Verification guidelines.

D Plausible distracter since conditions presented indicate natural circulation cooling has not yet been established. Loop delta-T is excessive in accordance with ATP 1210-10 Natural Circulation Verification guidelines.

Comments 1998 TMI SRO Exam Question 87.
1/20/00 - Added bullet to question stem to specify RCS Subcooled Margin exists, to satisfy ATOG Guideline 2.8. Without this an argument could be made that there is no correct answer provided.

Form ES-401-6

Written Exam Question Worksheet

Q # 062

Examination Outline Cross-Reference RO SRO

KA # 2.4.49 Page 2-16 Tier # 2

RO/SRO Importance Rating 4 4 Group # 2

Measurement Ability to perform without reference to procedures those actions that require immediate operation of system components and controls: Pressurizer Pressure Control - EP 1202-29 IAs for pressure control malfunction (PORV).

Proposed Question ☑ RO ☑ SRO **Correct Answer** B

Initial plant conditions:
- Cooldown in progress.
- RCS temperature is 430 degrees F.
- RCS pressure is 690 psig.
- RC-P-1A and RC-P-1C are operating.
- PORV NDTT switch is in AUTO.
- Pressurizer level control is in AUTO maintaining 100 inches.

Sequence of events:
- Plant cooldown was stopped in order to cycle CF-V-1A and CF-V-1B.
- All plant parameters were stabilized.
- Loop A Wide Range T-cold signal FAILED LOW.

From the list below, identify the ONE (1) statement that describes plant response to this situation.

A. RC-P1A AND RC-P-1C BOTH TRIP.

B. RCDT cooling valve IC-V-20 OPENS.

C. Pressurizer level control valve MU-V-17 OPENS.

D. Loop A Subcooling Margin Meter indication INCREASES.

Technical Reference ARP MAP G-1-7, PORV Open (Acoustic), Rev. 8, Pages 1 & 2.
ARP LWDS-1-4, R. C. Drain Tnk. Press. Hi, Rev. 10, Page 1.

Open Exam Reference

Learning Objective IV.A.01.08 State the following concerning the PORV:
a. Setpoints both high and low pressure.
b. NDT switch operation and interlocks.
c. Indication available to the operator to determine PORV position.
d. Function/Purpose of the PORV.

Question Source ☑ New ☐ TMI Bank TMI Question #
☐ Modified TMI Bank Parent Question #

Question History ☐ Used in Last Two TMI NRC Exams Exam Date
☐ Used in Audit Exam ☐ Used in Training Program Quiz Date

Question Cognitive Level ☐ Memory or Fundamental Knowledge
☑ Comprehension or Analysis

10 CFR Part 55 Content ☑ 55.41 .10 ☑ 55.43 .2 ☑ 55.45 ,6

Discriminant Validity Statements

A Plausible misconception that RCPs would automatically trip due to the low temperature signal. There IS a fourth pump STARTING interlock affected by this signal failure.

B Correct answer.

C Plausible misconception that Pressurizer level would decrease.

D Plausible misconception that T-cold is used to compute SCM, rather than T-hot.

Comments None.

Form ES-401-6

Written Exam Question Worksheet

Q # 066

Examination Outline Cross-Reference RO SRO

KA # SYSTEM 016 K4.03 Page 3.7-10 Tier # 2

RO/SRO Importance Rating 2.8 2.9 Group # 2

Measurement Knowledge of NNIS design feature(s) and/or interlock(s) which provide input to control systems.

Proposed Question ☑ RO ☑ SRO **Correct Answer** D

Initial plant conditions:
- Reactor power is 100%.
- ICS is in FULL AUTOMATIC.

RCS Loop A flow is slowly failing low and a SASS Mismatch alarm occurs but there is NO SASS actuation. Total RCS Flow signal to ICS is normal.

From the list below, identify the ONE (1) set of ICS Hand/Auto Stations that is required to be transferred to hand to mitigate the consequence of this event.

A. A Feedwater Pump AND A Startup & Main Feedwater Valves.

B. A & B Feedwater Loop Masters.

C. A & B Startup AND Main Feedwater Valves.

D. A & B Feedwater Pumps AND A & B Startup & Main Feedwater Valves.

Technical Reference ICS Print D553731, Feedwater Control Analog Logic, Rev. Q.

Open Exam Reference

Learning Objective IV.E.27.60 Given a set of plant conditions, determine the correct ICS response and any actions that must be taken if the ICS response is incorrect.

Question Source ☑ New ☐ TMI Bank TMI Question #
☐ Modified TMI Bank Parent Question #

Question History ☐ Used in Last Two TMI NRC Exams Exam Date
☐ Used in Audit Exam ☐ Used in Training Program Quiz Date

Question Cognitive Level ☐ Memory or Fundamental Knowledge
☑ Comprehension or Analysis

10 CFR Part 55 Content ☑ 55.41 .7 ☐ 55.43 ☐ 55.45

Discriminant Validity Statements

A Plausible misconception since the failure is an 'A' input to ICS.

B Plausible misconception that Feedwater Loop Masters would eliminate the bad signal.

C Plausible misconception that controlling the feedwater valves would mitigate the event.

D Correct answer.

Comments None.

Form ES-401-6

Written Exam Question Worksheet

Q # 069

Examination Outline Cross-Reference RO SRO

KA # SYSTEM 033 A3.02 Page 3.8-10 Tier # 2

RO/SRO Importance Rating 2.9 3.1 Group # 2

Measurement Ability to monitor automatic operation of the Spent Fuel Pool Cooling System including spent fuel leak or rupture.

Proposed Question ☑ RO ☑ SRO **Correct Answer** C

Plant conditions:
- Reactor power is 100%.
- SF-P-1A Spent Fuel Cooling Pump is operating in recirc mode.
- SF-P-2 Borated Water Recirc Pump is operating for Pool A (LWDS) cleanup.
- Spent fuel assembly rack location change in progress in Spent Fuel Pool A.

Due to equipment failure, a spent fuel assembly is dropped – lying on top of the fuel racks in Pool A. Fuel pin clad rupture has resulted in significant activity release to the spent fuel pool water.

Identify the ONE (1) statement below that describes plant design response to RM-L-5 indication, which pegs high due to the increase in radioactivity described above.

A. SF-P-2 trips.

B. SF-P-1A trips.

C. MAP C-1-1 RADIATION LEVEL HIGH actuates.

D. MAP C-1-1 RADIATION LEVEL HIGH actuates AND Fuel Handling Building Supply Fan, AH-E-10, trips.

Technical Reference ARP MAP C-1-1, Radiation Level Hi, Rev. 20, Page 53.

Open Exam Reference

Learning Objective IV.E.06.04 Given an RMS channel, state the interlocks associated with a channel in the Radiation Monitoring system.

Question Source ☑ New ☐ TMI Bank TMI Question #
☐ Modified TMI Bank Parent Question #

Question History ☐ Used in Last Two TMI NRC Exams Exam Date
☐ Used in Audit Exam ☐ Used in Training Program Quiz Date

Question Cognitive Level ☑ Memory or Fundamental Knowledge
☐ Comprehension or Analysis

10 CFR Part 55 Content ☑ 55.41 .7 ☐ 55.43 ☑ 55.45 .5

Discriminant Validity Statements

A Plausible misconception that LWDS cleanup flow should be automatically terminated to minimize plant personnel radiation exposures due to contamination of LWDS cation demineralizer resins.

B Plausible misconception that liquid flow out of the spent fuel pool should be terminated to limit curie transport out of the spent fuel pool in order to minimize plant personnel radiation exposures.

C Correct answer.

D Plausible misconception that air flow out of the spent fuel handling area should be minimized to reduce plant personnel radiation exposures.

Comments None.

Form ES-401-6

Written Exam Question Worksheet

Q # 083

Examination Outline Cross-Reference RO SRO

KA # SYSTEM 034 A1.02 Page 3.8-13 Tier # 2

RO/SRO Importance Rating 2.9 3.7 Group # 3

Measurement Ability to predict and/or monitor changes in parameters (to prevent exceeding design limits) associated with operating the Fuel Handling System controls, including water level in the refueling canal: FH actions for refueling canal low level.

Proposed Question ☑ RO ☑ SRO **Correct Answer** D

A fuel assembly has just been lifted from the upender and is transitioning to the core to be placed in core position H-8. The assembly is currently 2 feet away from the upender when spent fuel pool level is observed do be dropping at 10 inches per minute.

From the list below, identify the ONE (1) statement that describes the procedurally required disposition of the fuel assembly.

A. Placed in core position H-8.

B. Placed in the nearest available core location.

C. Placed in the upender to be returned to the Spent Fuel Pool.

D. Lowered between the plenum and the upender until it just touches the floor.

Technical Reference AbP 1203-43, Transfer Canal Seal Plate Gasket Failure/Level Loss, Rev. 6, Page 2.

Open Exam Reference

Learning Objective V.C.16.02 State the required Immediate Manual Actions for a failure of the fuel transfer canal seal plate per AP 1203-43.

Question Source ☑ New ☐ TMI Bank TMI Question #

☐ Modified TMI Bank Parent Question #

Question History ☐ Used in Last Two TMI NRC Exams Exam Date

☐ Used in Audit Exam ☐ Used in Training Program Quiz Date

Question Cognitive Level ☑ Memory or Fundamental Knowledge

☐ Comprehension or Analysis

10 CFR Part 55 Content ☑ 55.41 .5 ☐ 55.43 ☑ 55.45 .5

Discriminant Validity Statements

A. Plausible since this is where the assembly belongs.

B Plausible since this is an immediate action if the assembly is closer to the core.

C Plausible since the Spent Fuel Pool is an alternate storage location.

D Correct answer.

Comments None.

Form ES-401-6

Written Exam Question Worksheet

Q # 088

Examination Outline Cross-Reference RO SRO

KA # Conduct of Operations 2.1.29 Page 2-4 Tier # 3

RO/SRO Importance Rating 3.4 3.3 Group # 1

Measurement Knowledge of how to conduct and verify valve lineups: performance of valve lineup - independent verification of valve position.

Proposed Question ☑ RO ☑ SRO **Correct Answer** C

From the list below, identify the ONE (1) statement that describes the requirements for performing an Independent Verification for an easily accessible manual valve that is required to be closed.

A. One individual closes the valve, second individual verifies from an independent remote position DEMAND indicator that the valve closed.

B. One individual closes the valve, second individual independently uses a remote POSITION indicator to verify the valve is closed.

C. One individual closes the valve, second individual independently verifies the valve is closed by physically turning in the closed direction.

D. One individual closes the valve, while the second individual visually observes the first individual closing the valve.

Technical Reference AP 1067, Independent Verification Program, Rev. 28, Page 5.

Open Exam Reference

Learning Objective V.J.01.02 State how valve position must be verified for valves without remote position indication/ and state when valve position may be verified by remote indication - according to AP 1067 Independent Verification.

Question Source ☐ New ☐ TMI Bank TMI Question #

☐ Modified TMI Bank Parent Question #

Question History ☑ Used in Last Two TMI NRC Exams Exam Date 1998 TMI SRO

☐ Used in Audit Exam ☐ Used in Training Program Quiz Date

Question Cognitive Level ☑ Memory or Fundamental Knowledge

☐ Comprehension or Analysis

10 CFR Part 55 Content ☑ 55.41 .10 ☐ 55.43 ☑ 55.45 .1, .12

Discriminant Validity Statements

A Plausible misconception that use of DEMAND indication is an acceptable means of position verification.

B Plausible misconception that use of remote position indication is acceptable for manual valves with easy access.

C Correct answer.

D Plausible distracter since this is procedurally acceptable for valves which are not easily accessed.

Comments 1998 TMI SRO Exam Question 33.

Form ES-401-6

Written Exam Question Worksheet

Q # 092

Examination Outline Cross-Reference RO SRO

KA # Conduct of Operations 2.1.30 Page 2-4 Tier # 3

RO/SRO Importance Rating 3.9 3.4 Group # 1

Measurement Ability to locate and operate components, including local controls: Conduct of operations - local manual operation of MOV.

Proposed Question ☑ RO ☑ SRO **Correct Answer** C

From the list below, identify the ONE (1) witness required when hand-cranking a motor operated ESAS valve.

A. Licensed Reactor Operator.

B. Member of Plant Engineering staff.

C. Shift Foreman.

D. Shift Technical Advisor.

Technical Reference AP 1029, Conduct of Operations, Rev. 71, Page 28.

Open Exam Reference

Learning Objective V.A.10.16 Identify/explain the requirements for hand cranking motor operated valves to stop valve seat or stem leakage, as delineated in AP 1029, Conduct of Operations.

Question Source ☐ New ☐ TMI Bank TMI Question #

☐ Modified TMI Bank Parent Question #

Question History ☑ Used in Last Two TMI NRC Exams Exam Date 1995 TMI RO

☐ Used in Audit Exam ☐ Used in Training Program Quiz Date

Question Cognitive Level ☑ Memory or Fundamental Knowledge

☐ Comprehension or Analysis

10 CFR Part 55 Content ☑ 55.41 .7 ☐ 55.43 ☑ 55.45 .7

Discriminant Validity Statements

A Plausible misconception since this person holds an active NRC license.

B Plausible misconception regarding systems engineering SME support.

C Correct answer.

D Plausible misconception regarding shift engineering support.

Comments 1995 TMI RO Exam Question 20.

Form ES-401-6

Written Exam Question Worksheet

Q # 095

Examination Outline Cross-Reference RO SRO

KA # Equipment Control 2.2.13 Page 2-6 Tier # 3

RO/SRO Importance Rating 3.6 3.8 Group # 2

Measurement Knowledge of tagging and clearance procedures: equipment control - approval requirements for operation of blue-tagged equipment.

Proposed Question ☑ RO ☑ SRO **Correct Answer** C

In addition to the person having clearance, identify ONE (1) specific person whose approval is required prior to changing the condition or position of BLUE tagged ES equipment (SINGLE manipulation).

A. Plant Manager.

B. Director, Operations.

C. Duty Shift Supervisor.

D. Licensed Control Room Operator.

Technical Reference AP 1002, Rules for Protection of Employees Working on Electrical and Mechanical Apparatus, Rev. 85, Page 9.

Open Exam Reference

Learning Objective V.A.01.02 State whose permission is required to change the position/condition of blue tagged equipment IAW AP 1002.

Question Source ☐ New ☐ TMI Bank TMI Question #

☐ Modified TMI Bank Parent Question #

Question History ☑ Used in Last Two TMI NRC Exams Exam Date 1998 TMI SRO

☐ Used in Audit Exam ☐ Used in Training Program Quiz Date

Question Cognitive Level ☑ Memory or Fundamental Knowledge

☐ Comprehension or Analysis

10 CFR Part 55 Content ☑ 55.41 .10 ☐ 55.43 ☑ 55.45 .13

Discriminant Validity Statements

A A plausible misconception as this is a senior management official.

B A plausible misconception as this is a senior management official.

C Correct answer. Shift Supervisor title was recently changed to Shift Manager - procedure updates are not complete.

D Plausible misconception since this individual is licensed by the NRC.

Comments 1998 TMI SRO Exam Question 11. Shift Supervisor title was recently changed to Shift Manager, Shift Foreman titles were recently changed to Control Room Supervisor and Group Operations Supervisor - procedure updates are not complete.

Form ES-401-6

Written Exam Question Worksheet

Q # 097

Examination Outline Cross-Reference RO SRO

KA # Radiation Control 2.3.1 Page 2-9 Tier # 3

RO/SRO Importance Rating 2.6 3 Group # 3

Measurement Knowledge of 10 CFR 20 and related facility radiation control requirements: radiation control - approval requirements for emergency condition exposures in excess of normal limits.

Proposed Question ☑ RO ☑ SRO **Correct Answer** B

Identify the ONE (1) statement that describes the MINIMUM requirement(s) for an individual to be allowed to receive a TEDE dose of 4100 mRem per year, excluding a planned special exposure.

A. A special RWP is written covering the individual to be permitted to exceed 4000 mRem.

B. Approvals from the Radcon/Environmental Health & Safety Director AND the Site Director.

C. Approval from the President of the Company.

D. Notification of the NRC.

Technical Reference GET Radiation Worker Training Handout, Rev. 5, Page 14.

Open Exam Reference

Learning Objective III.F.02.01 State the Federal and TMI-1 Administrative Limits on Radiation Exposure at TMI-1 for whole body, skin and extremities.

Question Source ☐ New ☐ TMI Bank TMI Question #
☐ Modified TMI Bank Parent Question #

Question History ☑ Used in Last Two TMI NRC Exams Exam Date 1998 TMI SRO
☐ Used in Audit Exam ☐ Used in Training Program Quiz Date

Question Cognitive Level ☑ Memory or Fundamental Knowledge
☐ Comprehension or Analysis

10 CFR Part 55 Content ☑ 55.41 .12 ☑ 55.43 .4 ☑ 55.45 .9, .10

Discriminant Validity Statements

A Plausible misconception that a special RWP would permit additional exposure.

B Correct answer.

C Plausible misconception since this individual is required to pre-approve exposures in excess of 4500 mRem.

D Plausible misconception that the NRC could authorize additional exposure.

Comments 1998 TMI SRO Exam Question 6.
1/19/00 - Edited question stem to specify MINIMUM requirements and 4100 mRem exposure. This positively eliminated distracter C as a potentially correct answer. This individual COULD approve this exposure in the absence of the individuals in the normally correct answer (B). This individual is REQUIRED to approve exposures in excess of 4500 Mrem.

Form ES-401-6

Written Exam Question Worksheet

Q # 004 (10)

App'd

Examination Outline Cross-Reference RO SRO

KA # 000015 K5.02 Tier #

RO/SRO Importance Rating 2.90 Group #

Proposed Question ☐ RO ☑ SRO **Correct Answer** B

The reactor is super critical and just entering the intermediate range (4000 cps on the Source Range) when detector compensating voltage to NI-3 is lost. Which ONE (1) statement explains the effect this loss of compensating voltage will have on NI-3 indication?

A. NI-3 would be unaffected at this low power level.

B. NI-3 would indicate higher than NI-4.

C. NI-3 would come on scale some time after NI-4.

D. NI-3 would go off scale low before NI-4 if a reactor trip occurred while at 1E-8 amps.

Technical Reference OPM F-04 Nuclear Instrumentation Sys., Rev 9, Figure 4, Page 22.

Open Exam Reference None.

Learning Objective IV.E.11.09

Question Source ☑ TMI Bank TMI Question # SR4E11-09-Q05

☐ New ☐ Modified TMI Bank Parent Question #

Question History ☐ Used in Last Two TMI NRC Exam Exam Date

☐ Used in Audit Exam ☐ Used in Training Program Quiz Date

Question Cognitive Level ☐ Memory or Fundamental Knowledge

☑ Comprehension or Analysis (2)

10 CFR Part 55 Content ☐ 55.41 ☐ 55.43

Discriminant Validity Statements

A Plausible misconception since this is a correct response for higher reactor power conditions.

B Correct answer.

C This is a plausible distracter since this is a possible correct effect for overcompensation rather than undercompensation..

D This is a plausible distracter since it describes the effects of overcompensation during a reactor trip situation.

Comments None.

SYSTEM 015 K6.02
Page 3.7-7 2.6/2.9
41.7/45.7

New #10

Knowledge of the effect of a loss or malfunction on Disc/compensation cuts will have on the NIs.

N - Y

Note - SR4E11-09-Q05.

App 9

Replacement for RO Question #57
(Old SRO #20) Modified

Plant conditions require a manual reactor trip. The Reactor Trip AND DSS pushbuttons have been depressed. During the performance of the Immediate Actions of 1210-1, the following plant conditions exist:

All RCPs are operating
Turbine Stop Valve, SV-2, is open
Turbine Stop Valves SV-1, SV-3 and SV-4 are closed.
Turbine Control Valves are Open
Reactor power is stable at 22%
OTSG levels are 10% on the Operating range and stable
OTSG Pressures are stable at 1042 psig
RCS hot leg temperatures are 584F and stable
RCS Pressure is 2025 and rising slowly

Identify the procedurally required action for these conditions.

FIX ORDER

A. Place the EHC pump control switches in P-T-L and open EHC-FV-1.

B. Secure 1 RCP in each loop.

C. Initiate HPI and maintain primary to secondary heat transfer until power level is less than 10%.

D. Transfer ICS FW stations to manual to control OTSG levels.

Correct Answer: C

a. Plausible distracter since this is a remedial action for failure of the turbine to trip.

b. Plausible misconception since this action would reduce heat input to the RCS.

c. Correct Answer

d. Plausible distracter since this is a remedial action in the Reactor Trip ATP.

Form ES-401-6

Written Exam Question Worksheet

Q # ~~020~~ 57

Examination Outline Cross-Reference RO SRO

KA # 000029 EK3.12 Tier #

RO/SRO Importance Rating 4.70 Group #

Proposed Question ☐ RO ☑ SRO **Correct Answer:** C

Plant conditions require manual reactor trip. Upon depressing the Trip AND DSS pushbuttons, the reactor does not trip (reactor power remains at 100%). Which ONE (1) statement describes the required action?

A. Place the EHC pump control switches in P-T-L and open EHC-FV-1. ^procedurally

B. Place the diamond rod control station in manual and reduce reactor power.

C. Initiate HPI and maintain primary to secondary heat transfer until power level is less than 10%.

D. Transfer FW to manual to control OTSG levels.

Technical Reference ATP 1210-1 Reactor Trip Rev 37, Page 2.0.

Open Exam Reference None.

Learning Objective V.E.01.06

Question Source ☐ TMI Bank TMI Question #
☑ New ☐ Modified TMI Bank Parent Question #

Question History ☐ Used in Last Two TMI NRC Exam Exam Date
☐ Used in Audit Exam ☐ Used in ~~Training Program~~ Quiz Date

Question Cognitive Level ☐ ~~Memory or Fundamental Knowledge~~
☑ Comprehension or Analysis (2)

10 CFR Part 55 Content ☐ 55.41 ☐ 55.43

Discriminant Validity Statements

A Plausible distracter since this is a remedial action for failure of the turbine to trip.

B Plausible misconception since this action would reduce reactor power.

C Correct answer.

D Plausible distracter since this is a remedial action in the Reactor Trip ATP.

Comments None.

EPE 029 EK3.12
Page 4.1-9 4.4/4.7 mod
41.5/41.10/45.6/45.13
New # 57

Knowledge of the reasons for actions contained in EOP for ATWS.

Note – This Q was selected to go into the SRBank – Not in yet on 1/17/00 – DJB

Form ES-401-6

Written Exam Question Worksheet

Q # ~~061~~ 60

App'd w/ Δ's

Examination Outline Cross-Reference RO SRO

KA # 000037 AK1.02 Tier #

RO/SRO Importance Rating 3.90 Group #

Proposed Question ☐ RO ☑ SRO **Correct Answer** A

The crew has ~~reduced RCS pressure~~ taken action to minimize subcooling margin in accordance with ATP 1210-5, OTSG Tube Leakage. Which ONE (1) statement describes the reason for minimizing subcooling margin?

A. Minimize ~~RCS leakage through the leaking OTSG tube.~~ the differential pressure between the OTSG and RCS.

B. Minimize time required for cooldown of the RCS.

C. Minimize potential of lifting Main Steam safety valves.

D. Minimize tensile stresses on affected OTSG tubes.

DJB

Technical Reference Abnormal Transient Procedure, 1210-5, OTSG Tube Leakage, Rev 28, Page 2.

Open Exam Reference None.

Learning Objective V.E.05.05

Question Source ☐ TMI Bank TMI Question #
☐ New ☑ Modified TMI Bank Parent Question # SR5E05-05-Q03

Question History ☐ Used in Last Two TMI NRC Exam Exam Date
☐ Used in Audit Exam ☐ Used in Training Program Quiz Date

Question Cognitive Level ☐ Memory or Fundamental Knowledge
☑ Comprehension or Analysis (2)

10 CFR Part 55 Content ☐ 55.41 ☐ 55.43

Discriminant Validity Statements

A Correct answer.

B Plausible since depressurization of RCS is required during cooldown.

C Plausible since lowering RCS pressure reduces maximum OTSG pressure if affected OTSG is filled to solid condition.

D Plausible since RCS pressure reduction reduces stress on affected OTSG tubes.

Comments None.

Memory 2 - actes

APE 037 AK1.02
4.3/4.1/10/45.3 3.5/3.9
Page 4.2-29
New #60

Knowledge of the op'l imps. of leakrate vs. pressure drop as applied to SG Tube leak.

Note - This Q was selected to go into SR Bank - Not in yet m 1/17/00 - DJB

Form ES-401-6

Written Exam Question Worksheet

Q # ~~067~~ 63

App'd

Examination Outline Cross-Reference RO SRO

KA # 000039 K1.01 Tier #

RO/SRO Importance Rating 3.20 Group #

Proposed Question ☐ RO ☑ SRO **Correct Answer** B

Sequence of events:
- Reactor is operating at 35% power.
- FW-P-1A is in operation; FW-P-1B trip has not been reset.
- Steam line rupture occurs upstream of Main Steam Isolation Valve MS-V1A.
- The reactor and turbine trip.
- Main Turbine Stop Valves 1-4 fail to close.

Which ONE (1) statement describes why only one OTSG depressurizes as a direct result of the steam line break?

A. HSPS isolates Main Feedwater to OTSG 1A.

B. MS-V-1A and MS-V-1B are stop check valves that prevent back flow from OTSG 1B.

C. Closure of turbine Control Valves 1-4 results in separation of the two steam generators.

D. Automatic open command for EF-P-1 steam supply valve MS-V-13B is delayed for 40 seconds following MS-V-13A automatic operation.

Technical Reference C-302-011, Rev. 56, Main Steam.

Open Exam Reference None.

Learning Objective IV.C.01.03

Question Source ☐ TMI Bank TMI Question #
☑ New ☐ Modified TMI Bank Parent Question #

Question History ☐ Used in Last Two TMI NRC Exam Exam Date
☐ Used in Audit Exam ☐ Used in Training Program Quiz Date

Question Cognitive Level ☐ Memory or Fundamental Knowledge
☑ Comprehension or Analysis (3)

10 CFR Part 55 Content ☐ 55.41 ☐ 55.43

Discriminant Validity Statements

A Plausible distracter since this is a true statement for this situation.

B Correct answer.

C Plausible misconception that closure of Main Turbine Control Valves separates the two OTSGs.

D Plausible distracter since this is a true statement. MS-V-13B opening is delayed to allow MS-V-6 control prevent EF-P-1 overspeed, and to prevent steam pipe over-pressurization.

Comments None.

SYSTEM 039 K1.01 / KG
Page 3.4-19 3.1/3.2
41.2-41.9 / 45.7-45.8
B New #63 TMI Exam - DJB

Knowledge of the physical connections &/or C-E relationships betw the Stm Sys & OTSG's.

Form ES-401-6

Written Exam Question Worksheet

Q # ~~014~~ 78

Examination Outline Cross-Reference RO SRO

KA # 000003 3.10 Tier #

RO/SRO Importance Rating 3.20 Group # App 1

Proposed Question ☐ RO ☑ SRO **Correct Answer** C

Current plant conditions:
- Reactor is operating at 100% power.
- RCS Tavg is constant at 579º F.
- Make up tank level is decreasing slowly - MU-V-17 is in MANUAL control.
- Letdown flow has been constant at 45 gpm.
- RCP total seal injection flow is 38 gpm (~~normal~~) – MU-V-32 is in AUTO.
- RCP labyrinth seal DP indicators show low off-scale [redacted].
- Auxiliary Building airborne activity is increasing.

Which ONE (1) statement describes the cause for the abnormal conditions?

A. RCP seal #1 leak-off flow is aligned to the Auxiliary Building sump.

B. RCP total seal injection flow transmitter has failed.

C. RCP seal injection flow is not reaching the RCPs.

D. RCP seal #1 leak-off flow has been isolated by closure of MU-V-26.

Technical Reference Abnormal Procedure 1203-15, Loss of R.C. Makeup/Seal Injection, Rev 22, Page 2.

Open Exam Reference None.

Learning Objective IV.A.05.04

Question Source ☐ TMI Bank TMI Question #
☑ New ☐ Modified TMI Bank Parent Question #

Question History ☐ Used in Last Two TMI NRC Exam Exam Date
☐ Used in Audit Exam ☐ Used in Training Program Quiz Date

Question Cognitive Level ☐ Memory or Fundamental Knowledge
☑ Comprehension or Analysis (3)

10 CFR Part 55 Content ☐ 55.41 ☐ 55.43

Discriminant Validity Statements

A Plausible misconception since the question stem provides leak indications in the same plant building.

B Plausible misconception since the question stem provides leak indications in the same plant building.

C Correct answer.

D Plausible misconception since the question stem ng.
Plausible misconception since the question stem ng.

Knowledge of the effect of a loss or malf. on RCP Seals & Seal water supply will have on the RCPs.

Comments None.

SYSTEM 003 K6.02
Page 3.4-7 2.7/3.1
41.7 / 45.5
New # 078

Selected ~~not~~ Not used ~~Bank~~

Form ES-401-6

Written Exam Question Worksheet

Q # ~~031~~ 82

App'd

Examination Outline Cross-Reference RO SRO

KA # 000008 AA1.01 Tier #

RO/SRO Importance Rating 4.00 Group #

Proposed Question ☐ RO ☑ SRO **Correct Answer** C

Current plant conditions:
- Reactor is operating at 100% power.
- RCS pressure is 2155 psig.
- CRO closed RC-V-2 one minute ago due to suspected PORV leakage.
- RC Drain Tank pressure is 5.0 psig.

If the PORV is leaking, what is the expected tailpipe temperature?

A. 162° F.

B. 212° F.

C. 228° F.

D. 267° F.

Technical Reference Steam Tables.

Open Exam Reference Steam Tables.

Learning Objective III.C.02.12

Question Source ☐ TMI Bank TMI Question #
☑ New ☐ Modified TMI Bank Parent Question #

Question History ☐ Used in Last Two TMI NRC Exam Exam Date
☐ Used in Audit Exam ☐ Used in Training Program Quiz Date

Question Cognitive Level ☐ Memory or Fundamental Knowledge
☑ Comprehension or Analysis (3)

10 CFR Part 55 Content ☐ 55.41 ☐ 55.43

Discriminant Validity Statements

A Plausible distracter since this is the correct answer for 5 psia rather than 5 psig in case the examinee forgets to convert.

B Plausible distracter since this is the correct answer for atmospheric pressure in case the examinee fails to consider the positive pressure in the Reactor Coolant Drain Tank.

C Correct answer.

D This is a plausible distracter since this is the correct answer for 20 psig rather than 20 psia.

Comments None.

Ability to operate &/or monitor reseating of Code safety or PORV as applied to Pzr Vapor Space Accident.

APE 008 AA1.07
Page 4.2-8 #82
RO SRO
4.0 4.2
41.7/45.5/45.6

Form ES-401-6

Written Exam Question Worksheet

Q # 010

Examination Outline Cross-Reference RO SRO

KA # 000015 K5.02 Page 3.7-6 Tier #

RO/SRO Importance Rating 2.9 Group #

Measurement

Proposed Question ☐ RO ☐ SRO **Correct Answer** B

The reactor is super critical and just entering the intermediate range (4000 cps on the Source Range) when detector compensating voltage to NI-3 is lost. Identify the ONE (1) statement that describes the effect this loss of compensating voltage will have on NI-3 indication.

A. NI-3 would be unaffected at this low power level.

B. NI-3 would indicate higher than NI-4.

C. NI-3 would come on scale some time after NI-4.

D. NI-3 would go off scale low before NI-4 if a reactor trip occurred while at 1E-8 amps.

Technical Reference OPM F-04 Nuclear Instrumentation System, Rev 9, Figure 4, Page 22.

Open Exam Reference

Learning Objective IV.E.11.09 Describe or identify the affects of improper discriminator or compensating voltage settings on the source and intermediate range Nuclear Instrumentation channels.

Question Source ☐ New ☐ TMI Bank TMI Question #

☐ Modified TMI Bank Parent Question #

Question History ☑ Used in Last Two TMI NRC Exams Exam Date 1998 TMI SRO

☐ Used in Audit Exam ☐ Used in Training Program Quiz Date

Question Cognitive Level ☐ Memory or Fundamental Knowledge

☑ Comprehension or Analysis

10 CFR Part 55 Content ☐ 55.41 ☐ 55.43 ☐ 55.45

Discriminant Validity Statements

A Plausible misconception since this is a correct response for higher reactor power conditions.

B Correct answer.

C This is a plausible distracter since this is a possible correct effect for overcompensation rather than undercompensation.

D This is a plausible distracter since it describes the effects of overcompensation during a reactor trip situation.

Comments NRC approved question replacement - different from original examination submittal.

CONTROLLED COPY

Q#018

SECTION F-4
REVISION 9

TMI OPERATIONS PLANT MANUAL
NUCLEAR INSTRUMENTATION SYSTEM

Table of Effective Pages

PAGE	REVISION	PAGE	REVISION	PAGE	REVISION	PAGE	REVISION
1.0	9	31.0	7				
2.0	8	32.0	9				
3.0	7	33.0	7				
4.0	7	34.0	7				
5.0	7	35.0	7				
6.0	7	36.0	7				
7.0	7	37.0	7				
8.0	7	38.0	8				
9.0	7						
10.0	7						
11.0	7						
12.0	7						
13.0	7						
14.0	7						
15.0	7						
16.0	7						
17.0	7						
18.0	7						
19.0	7						
20.0	7						
21.0	7						
22.0	7						
23.0	7						
24.0	7						
25.0	7						
26.0	7						
27.0	7						
28.0	7						
29.0	7						
30.0	7						

Concur

Owner R E Smith Date 8-9-96

Operations Training Manager, TMI Reviews Date 8-16-96

Training Coordinator, TMI Linda L. Ritter Date 8-19-96

Approved

Plant Operations Director TMI L. G. Nole Date 8-26-96

FIGURE 4 - TYPICAL GAMMA COMPENSATED CURVE FOR A COMPENSATED ION CHAMBER

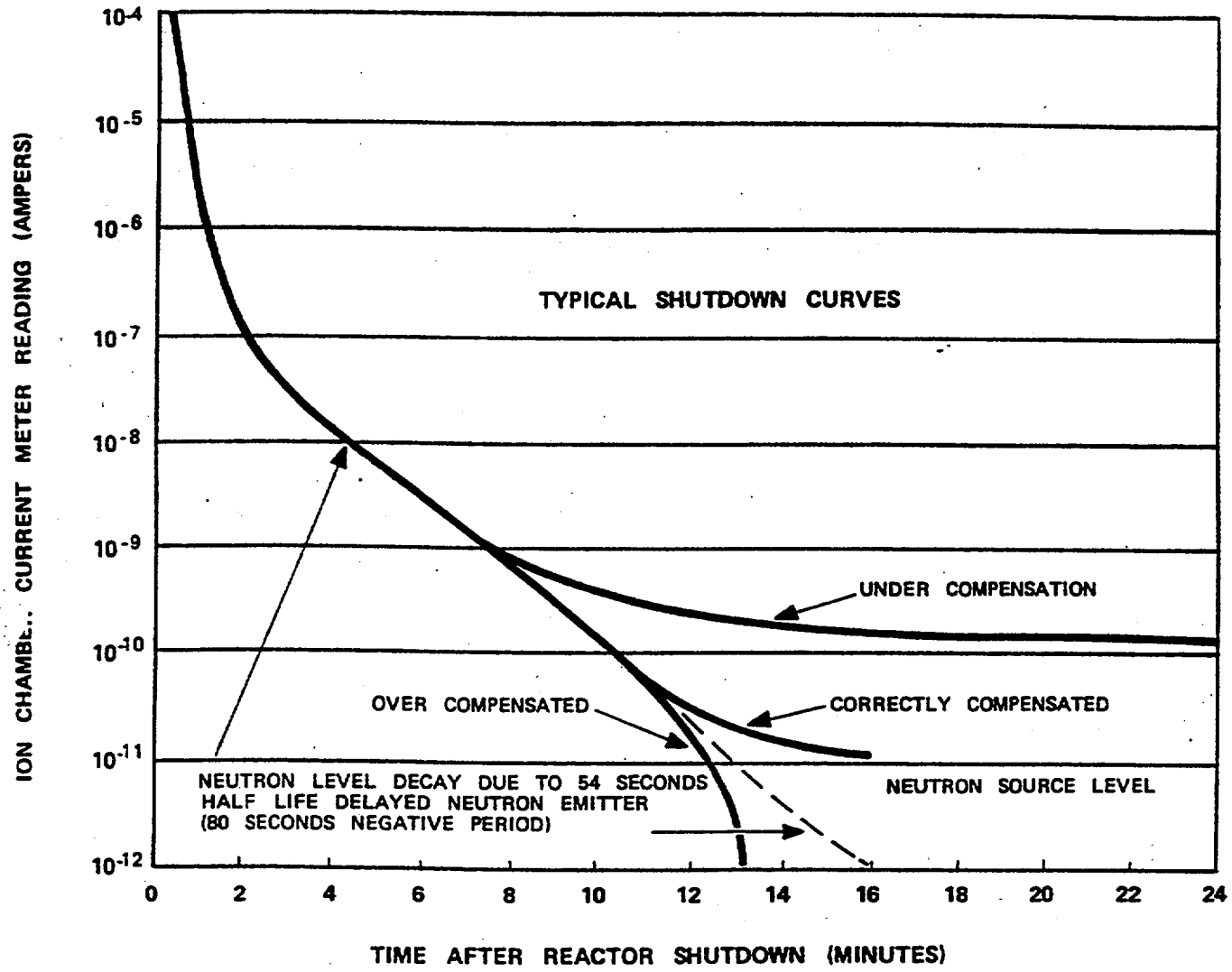

Form ES-401-6

Written Exam Question Worksheet

Q # 057

Examination Outline Cross-Reference RO SRO

KA # Page Tier #

RO/SRO Importance Rating Group #

Measurement

Proposed Question ☐ RO ☐ SRO **Correct Answer** D

Initial plant conditions:
- Reactor power 100%.
- ICS in full automatic.

Plant conditions require a manual reactor trip. After the CRO depresses the Manual Reactor Trip and DSS pushbuttons, the following plant conditions exist:
- Reactor power is stable at 22%.
- All 4 RCPs are operating.
- RCS hot leg temperatures are stable at 584 degrees F.
- RCS pressure is 2025 psig and rising slowly.
- Turbine Stop Valve SV-2, is open.
- Turbine Stop Valves SV-1, SV-3, and SV-4 are closed.
- Turbine Control Valves CV-1, CV-2, CV-3, and CV-4 are open.
- OTSG levels are 10% on the Operating Range and stable.
- OTSG pressures are stable at 1042 psig.

From the list below, identify the ONE (1) statement that describes the procedurally required action(s) for these conditions.

A. Secure 1 RCP in each loop.

B. Transfer ICS FW stations to manual to control OTSG levels.

C. Place the EHC pump control switches in P-T-L and open EHC-FV-1.

D. Initiate HPI and maintain primary to secondary heat transfer until power level is less than 10%.

Technical Reference ATOG ATP 1210-1, Reactor Trip, Rev. 40, Page 2.

Open Exam Reference

Learning Objective V.E.01.06 State and explain the steps of ATP 1210-1, Reactor Trip which deal with an ATWS event.

Question Source ☐ New ☐ TMI Bank TMI Question #
☑ Modified TMI Bank Parent Question #

Question History ☐ Used in Last Two TMI NRC Exams Exam Date
☐ Used in Audit Exam ☐ Used in Training Program Quiz Date

Question Cognitive Level ☐ Memory or Fundamental Knowledge
☑ Comprehension or Analysis

10 CFR Part 55 Content ☐ 55.41 ☐ 55.43 ☐ 55.45

Discriminant Validity Statements

A Plausible distracter since this reduces heat input to the RCS.

B Plausible distracter since this is a remedial action in the reactor trip ATP.

C Plausible distracter since this is a remedial action for failure of the turbine to trip.

D Correct answer.

Comments NRC approved replacement question - different from the original exam submittal.

CONTROLLED COPY

Q #57

GPU NUCLEAR	TMI Abnormal Transient Procedure	Number 1210-1
Title: **Reactor Trip**		Revision No. 40
Applicability/Scope: TMI Division	Responsible Office: Plant Operations Dir.	Effective Date: 10/19/99

This document is within QA plan scope: [X] Yes [ ] No

Safety Reviews Required: [X] Yes [ ] No

SIMULATOR ROOM FILE COPY

List of Effective Pages

Page	Revision	Page	Revision	Page	Revision	Page	Revision
1	40						
2	40						
3	40						
4	40						
5	40						
6	40						
7	40						

	Signature	Date
Originator	[signature]	10/15/99
Procedure Owner	James N. Faulks	10/15/99
PRG	John S. Schaub	10/18/99
Approver	James N. Faulks	10/15/99

Q #57

1.0 **ENTRY CONDITION** - Any condition requiring an automatic or manual trip signal or a symptom of core cooling upset occurs while shutdown prior to DHR operation.

> **NOTE**
>
> The following sequence represents a predetermined prioritization of immediate actions. Although some or all steps may be performed in parallel it is essential that all immediate actions be performed at least once and within several minutes.

2.0 **IMMEDIATE ACTIONS** - (Vital System Action, Status Verification, and Remedial Action).

2.1 Manually trip Reactor by depressing the Trip AND DSS pushbuttons.

Verify Groups 1-7 rods on bottom

IF power is not less than 10% power;	THEN initiate HPI, AND maintain primary to secondary heat transfer.
IF one or more rods are stuck out.	THEN emergency borate.

> **CAUTION**
>
> 1. If the Reactor is not less than 10% power, do not perform any of the following steps which would reduce the balance of primary to secondary heat transfer.
> 2. During the blowdown phase of a large break LOCA, the nuclear instrumentation may indicate erroneously high due to increased thermal neutron leakage. If the assessment is made that indicated NI power is not accurate, do not stop at this point.

2.2 Manually trip Turbine.

Verify T/G stop valves closed.

IF T/G stop valves are not closed;	THEN place EHC-P-1A&B in pull-to-lock AND open EHC-FV-1 (bypass valve at EHC).

Verify Generator/Field Breakers open.

IF Generator/field breakers remain closed;	THEN Verify that generator output is zero or negative MWe.
IF Generator output is zero or negative MWe;	THEN Manually trip GB1-12, GB1-02 AND the field breaker.

Form ES-401-6

Written Exam Question Worksheet

Q # 060

Examination Outline Cross-Reference RO SRO

KA # 000037 AK1.02 Page 4.2-29 Tier #

RO/SRO Importance Rating 3.9 Group #

Measurement

Proposed Question ☐ RO ☐ SRO **Correct Answer** A

The crew has taken action to minimize subcooling margin in accordance with ATP 1210-5, OTSG Tube Leakage. Identify the ONE (1) statement below that describes the reason for minimizing subcooling margin in this situation.

A. Minimize the differential pressure between the OTSG and RCS.

B. Minimize time required for cooldown of the RCS.

C. Minimize potential of lifting Main Steam safety valves.

D. Minimize tensile stresses on affected OTSG tubes.

Technical Reference ATOG ATP 1210-5, OTSG Tube leakage, Rev. 31, Page 2.

Open Exam Reference

Learning Objective V.E.05.05 Describe the methods available in ATP 1210-5, OTSG Tube Leakage, for limiting integrated OTSG tube leakage.

Question Source ☐ New ☐ TMI Bank TMI Question #

☑ Modified TMI Bank Parent Question #

Question History ☐ Used in Last Two TMI NRC Exams Exam Date 1998 TMI SRO E

☐ Used in Audit Exam ☐ Used in Training Program Quiz Date

Question Cognitive Level ☐ Memory or Fundamental Knowledge

☑ Comprehension or Analysis

10 CFR Part 55 Content ☐ 55.41 ☐ 55.43 ☐ 55.45

Discriminant Validity Statements

A Correct answer.

B Plausible since depressurization of RCS is required during cooldown.

C Plausible since lowering RCS pressure reduces maximum OTSG pressure if affected OTSG is filled to solid condition.

D Plausible since RCS pressure reduction reduces stress on affected OTSG tubes.

Comments NRC approved replacement question - different from the original exam submittal.

CONTROLLED COPY

Q#60

GPU NUCLEAR	TMI Abnormal Transient Procedure	Number 1210-5
Title **OTSG Tube Leakage**		Revision No. 31
Applicability/Scope TMI Division	Responsible Office Plant Operations Dir.	Effective Date 10/15/99

This document is within QA plan scope	X	Yes		No
Safety Reviews Required	X	Yes		No

TRAINING DEPT.

List of Effective Pages

Page	Revision	Page	Revision	Page	Revision	Page	Revision
1	31						
2	31						
3	31						
4	31						
5	31						
6	31						
7	31						
8	31						
9	31						

	Signature	Date
Originator	[illegible]	9-22-99
Procedure Owner	James Naulls	9/24/99
PRG	[illegible]	9/27/99
Approver	James Naulls	9/24/99

Q #60

GPU NUCLEAR	TMI Abnormal Transient Procedure	Number 1210-5
Title: OTSG Tube Leakage		Revision No 31

1.0 **ENTRY CONDITION**: Identified OTSG tube leakage greater than 1 gpm.

2.0 **IMMEDIATE ACTIONS**

2.1 Close MU-V-3 as needed AND increase makeup as needed to maintain PZR level.

3.0 **FOLLOW-UP ACTION**

OBJECTIVE: The objective of this procedure is to:

a. Shut down the reactor without intentionally lifting the MSSV's.

b. Steam both OTSG's to cool down the RCS to less than 540°F (MSSV's set point SAT TEMP).

c. Depressurize RCS to less than 1000 psig consistent with maintaining desired minimum SCM.

d. Establish RCS controlled cooldown with acceptable tube-to-shell DT.

e. Maintain OTSG steaming and avoid OTSG isolation unless:

1. RCS (Th or incore temp.) < 540°F and (pressure) < 1000 psig, and

a. BWST Level < 21 ft., or
b. Projected or Actual dose rates offsite approach 50 mr/hr total W.B. dose (TEDE) or 250 mr/hr child thyroid organ dose (CDE), or
c. Severe equipment damage is projected (i.e., steam line water hammer).

f. Stop the leakage by depressurizing and cooling down to DHR system operation and draining RCS as necessary.

CAUTION

Adhere to Pressurizer Level Guide ATP 1210-10, Guideline 2.1.

_____ 3.1 IF the reactor is NOT tripped: THEN shut down the plant (refer to OP 1102-10, "Plant Shutdown") at a rate specified by the Shift Supervisor to minimize the risk of a MS Safety Valve lifting.

_____ 3.2 If any Emergency Action Levels (EAL's) listed in Attachment 1 have been exceeded, implement EPIP-TMI-.01, "Emergency Classification", and additional implementing procedures as required.

_____ 3.3 Determine affected OTSG by sampling OTSG steamlines, surveying steam lines, observation of OTSG levels and feed rates.

Form ES-401-6

Written Exam Question Worksheet

Q # 063

Examination Outline Cross-Reference RO SRO

KA # 000039 K1.01 Page 3.2-22 Tier #

RO/SRO Importance Rating 3.2 Group #

Measurement

Proposed Question ☐ RO ☐ SRO **Correct Answer** B

Sequence of events:
- Reactor is operating at 35% power.
- FW-P-1A is in operation; FW-P-1B trip has not been reset.
- Steam line rupture occurs upstream of Main Steam Isolation Valve MS-V1A.
- The reactor and turbine trip.
- Main Turbine Stop Valves 1-4 fail to close.

From the list below, identify the ONE (1) statement that describes why only one OTSG depressurizes as a direct result of the steam line.

A. HSPS isolates Main Feedwater to OTSG 1A.

B. MS-V-1A and MS-V-1B are stop check valves that prevent back flow from OTSG 1B.

C. Closure of turbine Control Valves 1-4 results in separation of the two steam generators.

D. Automatic open command for EF-P-1 steam supply valve MS-V-13B is delayed for 40 seconds following MS-V-13A automatic operation.

Technical Reference C-302-011, Main Steam, Rev. 56.

Open Exam Reference

Learning Objective IV.C.01.03 State what kind of valve MS-V-1 A, B, C, D are and explain why was this type chosen.

Question Source ☐ New ☐ TMI Bank TMI Question #
☐ Modified TMI Bank Parent Question #

Question History ☑ Used in Last Two TMI NRC Exams Exam Date 1998 TMI SRO E
☐ Used in Audit Exam ☐ Used in Training Program Quiz Date

Question Cognitive Level ☐ Memory or Fundamental Knowledge
☑ Comprehension or Analysis

10 CFR Part 55 Content ☐ 55.41 ☐ 55.43 ☐ 55.45

Discriminant Validity Statements

A Plausible distracter since this is a true statement for this situation.

B Correct answer.

C Plausible misconception that closure of Main Turbine Control Valves separates the two OTSGs.

D Plausible distracter since this is a true statement. MS-V-13B opening is delayed to allow MS-V-6 control prevent EF-P-1 overspeed, and to prevent steam pipe over-pressurization.

Comments NRC approved replacement question - different from original exam submittal.

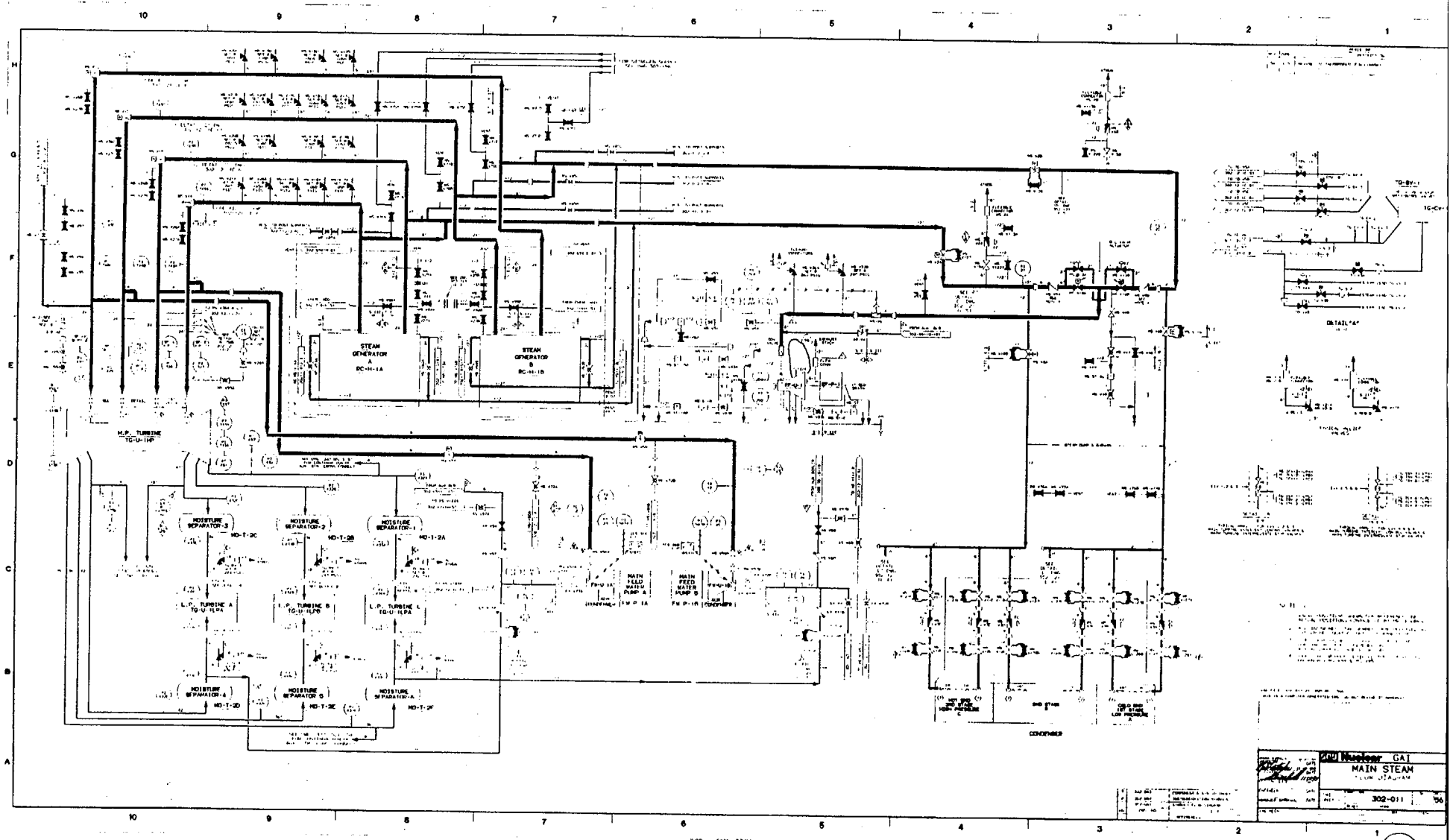
STEAM GENERATOR A RC-H-1A
STEAM GENERATOR B RC-H-1B
H.P. TURBINE TG-U-1HP
MOISTURE SEPARATOR-3 MD-T-2C
MOISTURE SEPARATOR-2 MD-T-2B
MOISTURE SEPARATOR-1 MD-T-2A
L.P. TURBINE A TG-U-1LPA
L.P. TURBINE B TG-U-1LPB
L.P. TURBINE C TG-U-1LPC
MOISTURE SEPARATOR-4 MD-T-2D
MOISTURE SEPARATOR-5 MD-T-2E
MOISTURE SEPARATOR-6 MD-T-2F
MAIN FEED WATER PUMP A FW-P-1A
MAIN FEED WATER PUMP B FW-P-1B
CONDENSER
DETAIL "A"
MAIN STEAM
302-011

Q#6-3

Form ES-401-6

Written Exam Question Worksheet

Q # 078

Examination Outline Cross-Reference RO SRO

KA # SYSTEM 003 K6.02 Page 3.4-7 Tier #

RO/SRO Importance Rating 2.7 3.1 Group #

Measurement Knowledge of the effect of a loss or malfunction on RCP seals and seal water supply will have on the RCPs.

Proposed Question ☑ RO ☑ SRO **Correct Answer** C

Current plant conditions:
- Reactor is operating at 100% power.
- RCS Tavg is constant at 579 degrees F.
- Make up tank level is decreasing slowly - MU-V-17 is in MANUAL control.
- Letdown flow has been constant at 45 gpm.
- RCP total seal injection flow is 38 gpm – MU-V-32 is in AUTO.
- RCP labyrinth seal DP indicators show low off-scale.
- Auxiliary Building airborne activity is increasing.

From the list below, identify the ONE (1) statement that describes the cause for the abnormal conditions.

A. RCP seal #1 leak-off flow is aligned to the Auxiliary Building sump.

B. RCP total seal injection flow transmitter has failed.

C. RCP seal injection flow is not reaching the RCPs.

D. RCP seal #1 leak-off flow has been isolated by closure of MU-V-26.

Technical Reference C-302-661, Makeup & Purification System, Rev. 51.

Open Exam Reference

Learning Objective IV.A.05.04 Given a cross section of the reactor coolant pump seal package label the major components and show flow paths and flow rates.

Question Source ☐ New ☐ TMI Bank TMI Question #
☐ Modified TMI Bank Parent Question #

Question History ☑ Used in Last Two TMI NRC Exams Exam Date 1998 TMI SRO E
☐ Used in Audit Exam ☐ Used in Training Program Quiz Date

Question Cognitive Level ☐ Memory or Fundamental Knowledge
☑ Comprehension or Analysis

10 CFR Part 55 Content ☑ 55.41 .7 ☐ 55.43 ☑ 55.45 .5

Discriminant Validity Statements

A Plausible misconception since the question stem provides leak indications in the same plant building.

B Plausible misconception since the question stem provides leak indications in the same plant building.

C Correct answer.

D Plausible misconception since the question stem provides leak indications in the same plant building.

Comments NRC approved replacement question - different from original exam submittal.

Q#78

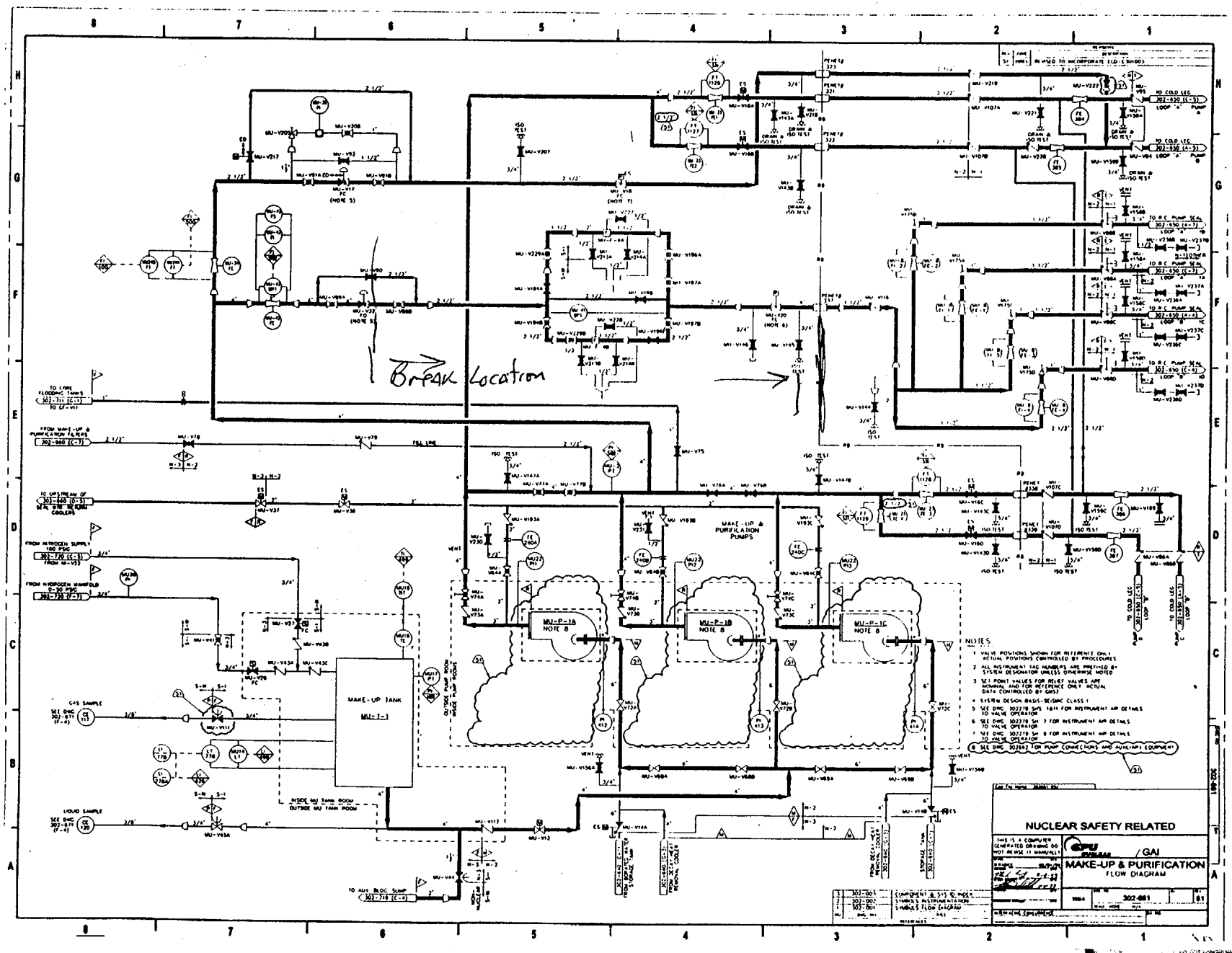
Break Location
MAKE-UP & PURIFICATION PUMPS
MU-P-1A NOTE 8
MU-P-1B NOTE 8
MU-P-1C NOTE 8
MAKE-UP TANK MU-T-1
NOTES
NUCLEAR SAFETY RELATED
GAI
MAKE-UP & PURIFICATION
FLOW DIAGRAM
302-081

Form ES-401-6

Written Exam Question Worksheet

Q # 082

Examination Outline Cross-Reference

RO ☒ SRO ☒

KA # 0000027 AA1.01 Page 3.5-15 Tier #

RO/SRO Importance Rating 4 Group #

Measurement

Proposed Question ☐ RO ☐ SRO Correct Answer C

Current plant conditions:
- Reactor is operating at 100% power.
- RCS pressure is 2155 psig.
- CRO closed RC-V-2 one minute ago due to suspected PORV leakage.
- RC Drain Tank pressure is 5.0 psig.

From the list below, identify the value for expected tailpipe temperarure if the PORV is leaking under these conditions.

A. 162° F.

B. 212° F.

C. 228° F.

D. 267° F.

Technical Reference Steam Tables.

Open Exam Reference Steam Tables.

Learning Objective III.C.02.12 Solve problems involving throttling process utilizing a Mollier diagram and/or steam tables.

Question Source ☐ New ☐ TMI Bank TMI Question #
☐ Modified TMI Bank Parent Question #

Question History ☑ Used in Last Two TMI NRC Exams Exam Date 1998 TMI SRO E
☐ Used in Audit Exam ☐ Used in Training Program Quiz Date

Question Cognitive Level ☐ Memory or Fundamental Knowledge
☑ Comprehension or Analysis

10 CFR Part 55 Content ☐ 55.41 ☐ 55.43 ☐ 55.45

Discriminant Validity Statements

A Plausible distracter since this is the correct answer for 5 psia rather than 5 psig in case the examinee forgets to convert.

B Plausible distracter since this is the correct answer for atmospheric pressure in case the examinee fails to consider the positive pressure in the Reactor Coolant Drain Tank.

C Correct answer.

D This is a plausible distracter since this is the correct answer for 20 psig rather than 20 psia.

Comments NRC approved replacement question - different from original exam submittal.

Facility: TMI
Exam Level: RO

Date of Examination: Week of 2/14/2000
Operating Test Number: _____

System / JPM Title	Type Code*	Safety Function
B.1 Control Room Systems		
a. 001 / Perform a safety group withdrawal (TMI task #0010180101; K/A = K4.13, RO = 3.4)	N, A, S, L JPM #177	1
b. 004 / Perform recovery from high temp. letdown isolation ** (TMI task #004C010101; K/A = A4.06, RO = 3.6)	M, S JPM #119	2
c. 010 / Respond to decreasing or low RCS pressure (TMI task #0008350501; K/A = A2.02, RO = 3.9)	N, A, S JPM #178	3
d. 059 / Transfer MFW pump control between ICS and motor speed changer *** (TMI task #0598060401; K/A = K1.07, RO = 3.2)	D, S JPM #116	4
e. 022 / Perform required actions if containment temperature cannot be controlled within specified limits (TMI task #0020070401; K/A = A4.02, RO = 3.2)	D, A, S JPM #079	5
f. 064 / Return 4KV ES bus to its normal power supply *** (TMI task #0620080101; K/A = A2.09, RO = 3.1)	D, S, L JPM #064	6
g. 012 / Energize and reset RPS channel ** (TMI task #0120010101; K/A = A2.02, RO = 3.6)	D, S JPM #153	7
B.2 Facility Walk-Through		
a. 004 / Perform emergency boration lineup. (TMI task #009A010204; K/A = A2.14, RO = 3.8)	D, L, R JPM #109	1
b. 063 / Respond to loss of A-DC (TMI task #0000580504; K/A = AK3.02, RO = 4.0)	D JPM #067	6
c. 086 / Manually actuate relay room CO2 system (TMI task #0868040101; K/A = K4.06, RO = 3.0)	M, A, L JPM #045	8

* Type Codes: (D)irect from bank, (M)odified from bank, (N)ew, (A)lternate path, (C)ontrol room, (S)imulator, (L)ow-Power, (R)CA

** 119 and 153 may be performed simultaneously *** 064 and 116 may be performed simultaneously

C O P Y

Facility: TMI-1 NRC RO Exam | Date of Examination: 02 /14/2000
Examination Level (circle one): RO / SRO | Operating Test Number: _____

	Administrative Topic/Subject Description	Describe method of evaluation: 1. ONE Administrative JPM, OR 2. TWO Administrative Questions
A.1	**Conduct of Operations:** **Shutdown Margin Calculation** **K/A 2.1.25 RO 2.8** **TMI Task 0010040101** **RO 2.6**	JPM: RO is tasked to calculate Shutdown Margin given plant conditions that will involve one inoperable control rod.
	Conduct of Operations: **Computer Leakrate Calculation** **K/A 2.1.19 RO 3.0** **TMI Task 0020010201** **RO 2.49**	JPM: Given a RCS leak the RO is tasked to perform a RCS leak rate calculation using the plant process computer and then evaluate the results against Technical Specifications.
A.2	**Equipment Control:** **Verify EDG Operability** **K/A 2.2.12 RO 3.0** **TMI Task 0640010101** **RO 2.61**	JPM: RO is tasked to verify / place an emergency diesel generator in ES standby following a surveillance for a test run. Note: NRC K/A was incorrect on original submittal.
A.3	**Radiation Control:** **Tagging manual operated valves in a High Rad Area** **K/A 2.3.1 RO 2.6** **TMI Task 1190120301** **RO 3.86**	**JPM: RO is tasked to hang red tags on manual valves located in a high radiation area IAW AP 1002, which allows tagging at entrance of High Rad Area.** **Rev. 1**
A.4	**Emergency Plan:** **Emergency Communications** **K/A 2.4.43 RO 2.8** **TMI Task 5010045003 RO 2.90**	JPM: RO is tasked to perform the required offsite notifications following an Emergency Plan Declaration.

C O P Y

Facility: TMI Scenario No. 1 (70 minutes) Op-Test No.: DAY-1

Examiners: _____ Operators: _____

Objectives: To evaluate applicants' ability to: transfer ICS stations back to automatic per 1105-4; diagnose and respond to a loss of RC pump seal injection flow per 1203-15, and then an RC pump #1 seal failure per 1203-16; reduce reactor power and secure the RC pump; diagnose and respond to an RCS leak in containment per alarm responses; respond to a reactor trip with failure of the main turbine to automatically trip per 1210-1; respond to an ES actuation with failure of B-train HPI pump to automatically start per 1210-1 and 1210-10; and diagnose and respond to an increase in RCS leakrate and loss of 25° F subcooled margin per 1210-2 and 1210-6.

Initial Conditions: IC15 (100% power, BOC), with RR-P-1A out of service, and the following ICS stations in hand: SG/Rx master, both FW loop masters, all four FW valve stations, both FW pump stations, and delta-Tc station with demand at zero (0).

Turnover: Plant is at 100% power, BOC, with RR-P-1A out of service for shaft bearing replacement (4 hours into 16 hour estimated work time).

The following ICS stations are in hand: SG/Rx master, both FW loop masters, all four FW valve stations, both FW pump stations, and delta-Tc. Maintenance has been completed on the FW ratio and BTU limit circuits, and ICS must be returned to full automatic.

Event No.	Action No.	Event Type*	Event Description
1	N/A	N (BOP)	Return ICS to full automatic.
2	AOR** MU07	I (RO) C (RO)	MU-FT-42, RCP seal injection flow fails high (80 gpm) **02A3M05-ZAOMU42FI FLO MU-42FI. MU-V-32, RCP seal injection flow control valve closes.
3	MU19A	C (RO) R (RO)	RC-P-1A #1 seal failure; 100% severity (50 gpm) over 60 seconds. Reduce power to 70% and secure RC-P-1A.
4	RC08B	I (BOP)	RC5A-TE3 (selected loop-A T-cold) fails; 0% severity (520°F) ramped in over 30 seconds when RC-P-1A is secured. Event Trigger: THA0427<5.0
5	TH06	M (ALL)	LOCA at RC-P-1A; 0.15% severity (1500 gpm) ramped in over 100 seconds.
6	TC02	C (BOP)	Main turbine fails to automatically trip when reactor trips.
7	MU23C	C (RO)	MU-P-1C fails to automatically start on ES signal.
8	N/A	M (ALL)	Loss of 25°F RCS subcooled margin and small break LOCA cooldown.

* (N)ormal, (R)eactivity, (I)nstrument, (C)omponent, (M)ajor

Facility: TMI Scenario No. 2 (80 minutes) Op-Test No.: DAY-1

Examiners: _____ Operators: _____

Objectives: To evaluate applicants' ability to: synchronize and load turbine/generator per 1106-1, and continue plant startup per 1102-2; respond to an OTSG tube leak per 1210-5; perform a plant and reactor shutdown per 1210-5 and 1102-10; respond to a makeup pump trip per alarm response; respond to a failed pressurizer level transmitter per 1202-29; respond to a turbine bypass valve failure after turbine trip; and reduce subcooled margin per 1210-5 with failure of the pressurizer spray valve to open.

Initial Conditions: IC12, 14% reactor power, 300 EFPD, during a xenon-free plant startup with main turbine hot at 1800 rpm, ready to synchronize and load. MFW pump on MS.

Turnover: Reactor is at 14% power during a xenon-free plant startup at 300 EFPD, with main turbine hot at 1800 rpm, ready to synchronize and load. The plant tripped 80 hours ago due to a main generator relay failure. Continue plant startup by synchronizing and loading turbine-generator and increasing power per 1102-2. MFW pump and gland steam on MS.

Event No.	Action No.	Event Type*	Event Description
1	N/A	N (BOP)	Synchronize and load turbine generator per 1106-1.
2	N/A	R (BOP)	Increase reactor power per 1102-2 and place turbine in auto.
3	MS01A	I (BOP)	Selected turbine header pressure instrument fails low with main turbine in automatic. (0% severity over 20 seconds)
4	TH16A	M (ALL)	Tube Leak on A-OTSG; 0.3% severity (45 gpm)
5	N/A	R (RO)	Plant & reactor shutdown per 1210-5 & 1102-10.
6	MS09D	C (BOP)	MS-V-3D (turbine bypass valve) fails open after turbine trip. Event Trigger: TC:TRIP
7	RC04A	I (RO)	Selected PZR level fails high; 0% severity over 600 seconds.
8	MU01A	C (RO)	MU-P-1A trips after start. Event trigger: MUPDISA>1000.
9	**DIOR	C (RO)	RC-V-1 does not open to reduce RCS subcooled margin per 1210-5; must use PZR vent and/or PORV. **02A5S06-ZDIPBORCV1 OPN CC RC-V-1 OPEN PB

* (N)ormal, (R)eactivity, (I)nstrument, (C)omponent, (M)ajor

Facility: TMI Scenario No. 3 (70 minutes) Op-Test No.: DAY-2

Examiners: _____ Operators: _____

Objectives: To evaluate the applicants' ability to: swap operating makeup pumps per 1104-2; respond to a makeup system leak per alarm responses; perform a plant shutdown per 1102-10; secure a MFW pump per 1106-3; respond to a turbine trip while less than ARTS per K-1-1; respond to a main steam line break and excessive primary to secondary heat transfer per 1210-3; and stabilize plant following termination of excessive primary to secondary heat transfer per 1210-3.

Initial Conditions: IC16 (100% power MOC), IA-P-4 out of service, IA-P-1A running in hand.

Turnover: Plant at 100% power, MOC, IA-P-4 out of service, IA-P-1A running in hand. MU-P-1B must be removed from service for an oil system inspection – expected duration is two hours. DCCW loop-A will be sampled while running.

Event No.	Action No.	Event Type*	Event Description
1	N/A	N (RO)	Operating makeup pumps are swapped per 1104-2.
2	MU14 AOR**	C (RO) I (RO) R (RO) N (BOP)	Makeup system leak (50%=50 gpm) downstream of makeup valve, and low range makeup flow transmitter, MU-FT-24A, fails low. The makeup system leak requires normal makeup line isolation and management will order plant shutdown. **02A3M06-ZAOMU24FI FLO (0% with 120 second delay)
3	FW06B	N (BOP) I (BOP)	As FW-P-1A is removed from service per 1102-10/1106-3, the selected B-train MFW valve d/p transmitter, SP11B-DPT2 fails low (0% severity over 15 seconds) Trigger = FWFDFWP(1)<416
4	EG03 MS03A	M (ALL)	Main generator and turbine trips at about 40% power, and a main steam line break on A-SG occurs outside containment (100% severity ramped in over 300 seconds).
5	FW13A MS10, SGA, TRN B	C (BOP)	FW-V-5A breaker trips as it is commanded to close, causing main feedwater block valve to be failed 95% open. And, HSPS isolation of FW-V-16A and 17A (train-A) on low SG pressure will fail to actuate. Trigger = FWVFWV5A<0.95
6	DOR***	C (RO)	MU-V-16C will not close by pushbutton on panel when required to secure HPI. ***03A4S35-ZDIPBCMUV16C ON CR MU-V-16C CLOSE PUSHBUT

* (N)ormal, (R)eactivity, (I)nstrument, (C)omponent, (M)ajor

ORIGINAL

Facility: TMI Scenario No. 4 (70 minutes) Op-Test No.: DAY-2

Examiners: _____ Operators: _____

Objectives: To evaluate the applicants' ability to: manually increase reactor power per 1102-2; transfer MFW pump steam supplies per 1106-3; respond to a loss of RC makeup and seal injection per 1203-15; respond to a loss of main feedwater per alarm responses; respond to an EFW actuation failure per 1210-10; respond to a SG tube rupture per 1210-5; and respond to a loss of 25°F subcooled margin per 1210-2.

Initial Conditions: IC08, reactor critical at 1E-8 amps during a plant startup at MOC. All operating ventilation fans transferred to A-train.

Turnover: Reactor is critical at 1E-8 amps during a plant startup at MOC. Critical data has been obtained and 1103-8 has been closed out. FW-P-1A and gland steam is currently supplied from the auxiliary steam system. B-RCBT is on sample recirc.

Event No.	Action No.	Event Type*	Event Description
1	NI19A	R (RO) I (RO)	Reactor power is increased to 5% power using CRD panel in accordance with 1102-2. NI-5 (selected power range NI) will not increase above 0% as reactor power is increased into power range flux level.
2	MSR19	N (BOP)	FW-P-1A is transferred from auxiliary steam to main steam per 1106-3 prior to 5% reactor power per 1102-2.
3	RC23A	I (BOP)	At ≈5% power, selected B-SG startup level transmitter (LT-1054) fails low (0% over 300 seconds), causing FW-V-16B to open in auto.
4	ED02D	C (RO)	1A auxiliary transformer trips, causing trip of MU-P-1B and loss of RC makeup/seal injection.
5	DOR** ICR03	C (BOP) C (BOP)	FW-P-1A speed control fault causes loss of main feedwater. **01A5S07-ZDIMSCA(3) SLOLO FW-P-1A MSC SWITCH EF-V-30B/C do not automatically open for EFW to B-SG.
6	TH15B DOR***	M (ALL) C (RO)	A tube rupture occurs on B-SG that results in loss of 25°F subcooled margin. (20% severity over 100 seconds) RC-P-1B does not trip using its normal control switch. ***02A3S16-ZDICSRCP1B(1) PTL RC-P-1B CS, and 02A3S16-ZDICSRCP1B(2) STP RC-P-1B CS

* (N)ormal, (R)eactivity, (I)nstrument, (C)omponent, (M)ajor

ORIGINAL

ORIGINAL

Facility: TMI
Exam Level: RO

Date of Examination: Week of 2/14/2000
Operating Test Number: _____

System / JPM Title	Type Code*	Safety Function
B.1 Control Room Systems		
a. 001 / Perform a safety group withdrawal (TMI task #0010180101; K/A = K4.13, RO = 3.4)	N, A, S, L JPM #177	1
b. 004 / Perform recovery from high temp. letdown isolation ** (TMI task #004C010101; K/A = A4.06, RO = 3.6)	M, S JPM #119	2
c. 010 / Respond to decreasing or low RCS pressure (TMI task #0008350501; K/A = A2.02, RO = 3.9)	N, A, S JPM #178	3
d. 059 / Transfer MFW pump control between ICS and motor speed changer *** (TMI task #0598060401; K/A = K1.07, RO = 3.2)	D, S JPM #116	4
e. 022 / Perform required actions if containment temperature cannot be controlled within specified limits (TMI task #0020070401; K/A = A4.02, RO = 3.2)	D, A, S JPM #079	5
f. 064 / Return 4KV ES bus to its normal power supply *** (TMI task #0620080101; K/A = A2.09, RO = 3.1)	D, S, L JPM #064	6
g. 012 / Energize and reset RPS channel ** (TMI task #0120010101; K/A = A2.02, RO = 3.6)	D, S JPM #153	7
B.2 Facility Walk-Through		
a. 004 / Perform emergency boration lineup. (TMI task #009A010204; K/A = A2.14, RO = 3.8)	D, L, R JPM #109	1
b. 063 / Respond to loss of A-DC (TMI task #0000580504; K/A = AK3.02, RO = 4.0)	D JPM #067	6
c. 086 / Manually actuate relay room CO2 system (TMI task #0868040101; K/A = K4.06, RO = 3.0)	M, A, L JPM #045	8

* Type Codes: (D)irect from bank, (M)odified from bank, (N)ew, (A)lternate path, (C)ontrol room, (S)imulator, (L)ow-Power, (R)CA

** 119 and 153 may be performed simultaneously *** 064 and 116 may be performed simultaneously

Facility: TMI-1 NRC RO Exam	Date of Examination: 02 /14/2000
Examination Level (circle one): RO / SRO	Operating Test Number: _____

Administrative Topic/Subject Description		Describe method of evaluation: 1. ONE Administrative JPM, OR 2. TWO Administrative Questions
A.1	**Conduct of Operations:** **Shutdown Margin Calculation** **K/A 2.1.25 RO 2.8** **TMI Task 0010040101 RO 2.6**	JPM: RO is tasked to calculate Shutdown Margin given plant conditions that will involve one inoperable control rod.
	Conduct of Operations: **Computer Leakrate Calculation** **K/A 2.1.19 RO 3.0** **TMI Task 0020010201 RO 2.49**	JPM: Given a RCS leak the RO is tasked to perform a RCS leak rate calculation using the plant process computer and then evaluate the results against Technical Specifications.
A.2	**Equipment Control:** **Verify EDG Operability** **K/A 2.2.14 RO 2.5** **TMI Task 0640010101 RO 2.61**	JPM: RO is tasked to verify / place an emergency diesel generator in ES standby following a surveillance for a test run.
A.3	**Radiation Control:** **RWP Entry & Exit Requirements Survey Map** **K/A 2.3.1 RO 2.6**	JPM: RO is tasked to enter and exit a radiological area. This task includes reviewing the RWP and Survey Map.
A.4	**Emergency Plan:** **Emergency Communications** **K/A 2.4.43 RO 2.8** **TMI Task 5010045003 RO 2.90**	JPM: RO is tasked to perform the required offsite notifications following an Emergency Plan Declaration.

ORIGINAL

NRC RO OPERATIONAL
SIMULATOR SCENARIO No. 1

RC PUMP SEAL FAILURE, SMALL BREAK LOCA, & LOSS OF SUBCOOLED MARGIN

DEVELOPED BY/DATE: _____ 12/13/99

REVIEWED BY/DATE: _____ 12/15/99

APPROVED BY/DATE: _____ 12/15/99
(OPERATIONS TRAINING MANAGER)

NRC RO OPERATIONAL
SIMULATOR SCENARIO No. 1

SCENARIO CHANGE HISTORY PAGE			
REVISION	DATE	REFERENCE TITLE	DESCRIPTION (Include AI # if appropriate)

NRC RO OPERATIONAL SIMULATOR SCENARIO No. 1

1.0 GENERAL DESCRIPTION OF SCENARIO

Plant at 100% power, MOC, with RR-P-1A out of service, and the following ICS stations in HAND:

SG/Rx Master, both FW Loop Masters, all four FW Valve stations, both FW Pump stations, and Delta-Tc station.

ICS is returned to full automatic.

RC Pump seal injection flow transmitter causes MU-V-32 closure and loss of seal injection.

RC-P-1A experiences a #1 seal failure.

When RC-P-1A is secured, selected RCS Loop-A T-cold fails low.

A small break LOCA (1500 gpm) occurs at RC-P-1A.

The main turbine fails to automatically trip when reactor trips.

MU-P-1C fails to automatically start on ES actuation.

Loss of 25°F subcooled margin requires a small break LOCA cooldown.

Estimated scenario time - 70 minutes. **3 Critical Tasks**

2.0 REFERENCES

A. 10 CFR 55.45 Operating Tests, (a) Content (3), (4), (5), (6), (7), (8), (9), (12), (13)

B. PROCEDURES

1105-4	Integrated Control System
1203-15	Loss of RC Makeup/Seal Injection
1203-16	Reactor Coolant Pump and Motor Malfunction
1103-6	Reactor Coolant Pump Operation
1210-1	Reactor Trip (copies required for examiners)
1210-2	Loss of 25°F Subcooled Margin
1210-6	Small Break LOCA Cooldown
1210-10	Abnormal Transients Rules, Guides, and Graphs

Alarm Responses

NRC RO OPERATIONAL
SIMULATOR SCENARIO No. 1

3.0 TASKS

0150040101	Transfer ICS stations to automatic
0008210501	Respond to loss of RCP seal injection
0008180401	Respond to high RCP seal #1 leakoff
0158020401	Respond to a SASS mismatch/actuation
3418000101	Perform plant power changes
0030030101	Perform a normal reactor coolant pump shutdown
0150030101	Operate the ICS in hand
0000070501	Respond to a reactor trip as the primary CRO
0000080501*	**Respond to a reactor trip as the secondary CRO**
0130020101	Manually initiate the ESAS
0618000501	Respond to an emergency feedwater actuation
0008360501	Throttle emergency feedwater
000C190501*	**Respond to loss of 25°F subcooled margin**
000C230501	Respond to a small break LOCA
0130030101	Reset an ES channel
0130040101	Bypass or defeat an ES channel
004C040101*	**Throttle high pressure injection**

*** Critical Task**

NRC RO OPERATIONAL
SIMULATOR SCENARIO No. 1

4.0 SIMULATOR INITIALIZATION

A. IC16 100% power, steady-state, MOC.

Place simulation in RUN and perform the following:

1. Red tag RR-P-1A extension control on CC in pull-to-lock.
2. Place red sticker tag on RR-P-1A OPEN pushbutton on CC.
3. Verify or align 1C ES Valves MCC to the 1S Bus.
4. Transfer the following ICS stations to HAND:
   SG/Rx Master, both FW Loop Masters, all four FW Valves, both FW Pumps, and Delta-Tc
5. Reduce Delta-Tc station demand to zero (0).

B. EVENT TRIGGERS

#4 THA0427<5.0
Command: IMF RC08B 0 30

C. MALFUNCTIONS

MU07	MU-V-32 failure; insert at 0% severity over 10 second ramp on Event #2.
MU19A	RC-P-1A #1 seal failure; insert at 100% severity over 60 second ramp on Event #3.
TH06	LOCA at RC-P-1A; insert at 0.15% severity over 100 second ramp on Event #5.
TC02	Main Turbine auto trip failure; insert immediately.
MU23C	MU-P-1C auto start failure; insert immediately.

D. REMOTE FUNCTIONS

RWR07	RR-P-1A breaker; insert OUT immediately to rack out RR-P-1A breaker.
RWR24	RR-V-1A breaker; insert OPEN immediately to open RR-V-1A breaker.

E. OVERRIDES

02A3M05-ZAOMU42FI FLO MU-42FI; insert at 100% severity over 10 second ramp on Event #2.

F. MONITOR

Set MSK2609A = 14.7 immediately (auxiliary steam pressure).

NRC RO OPERATIONAL
SIMULATOR SCENARIO No. 1

5.0 SCENARIO PREVIEW

A. EXAMINER PREVIEW

Plant at 100% power, MOC, with RR-P-1A out of service and the following ICS stations in HAND: SG/Rx Master, both FW Loop Masters, all four FW Valves, both FW Pumps, and Delta-Tc. Delta-Tc demand is at zero (0) from previous maintenance on module.

1. Secondary CRO must return ICS to full automatic per 1105-4.
2. MU-FT-42, RCP Seal Injection flow fails high over 10 seconds, causing MU-V-32 to automatically close. Primary CRO must respond to the loss of RC Pump seal injection per 1203-15, by reopening MU-V-32 in HAND.
3. RC-P-1A #1 seal failure requires power to be reduced to less than 75% and pump to be secured per 1203-16.
4. When RC-P-1A is secured, RC5A-TE3 (selected RCS loop-A T-cold) fails low to 520°F over 30 seconds, causing SASS mismatch and high RCS delta-Tc. The secondary CRO must respond to the SASS mismatch per H-3-2 and control ICS feedwater loop masters to re-ratio main feedwater per 1203-16, then return FW loop masters back to AUTO.
5. A small break LOCA at RC-P-1A ramps in over 100 seconds, eventually resulting in an automatic reactor trip if not tripped manually per 1210-10 Pressurizer Level Guide. The CROs must respond to the increased RB radiation levels per C-1-1 and 1202-12, and to the reactor trip per 1210-1.
6. The main turbine will not automatically trip when the reactor trips, requiring the secondary CRO to manually trip the turbine per 1210-1 when reactor power is less than 10%. **(CT)**
7. MU-P-1C will not automatically start on any ESAS signal, requiring the primary CRO to manually start MU-P-1C per 1210-10.
8. 25°F subcooled margin is lost, requiring the primary CRO to secure remaining RC pumps per 1210-2 **(CT)**. The secondary CRO must verify EFW actuation and eventually throttle EFW flows per 1210-10. When subcooled margin is regained, ESAS signals must be cleared and the primary CRO must throttle HPI per 1210-10 for PTS concerns **(CT)**.
   A small break LOCA cooldown will be commenced per 1210-6.

NRC RO OPERATIONAL
SIMULATOR SCENARIO No. 1

B. SHIFT BRIEFING

1. Plant is at 100% power, steady-state, 300 EFPD.

2. RR-P-1A is out of service for shaft bearing replacement. It has been out of service 4 hours into its 16 hour estimated completion time. (See On-line Maintenance Risk Management document)

3. The following ICS stations are still in HAND following completed maintenance on the FW ratio and BTU limit circuits: SG/Rx Master, both FW Loop Masters, all four FW Valves, both FW Pumps, and Delta-Tc.

4. Orders for this shift include transferring ICS back to full automatic, and maintaining 100% power operation.

NRC RO OPERATIONAL
SIMULATOR SCENARIO No. 1

6.0 SEQUENCE OF EVENTS

Examiner Notes and Actions	Expected Operator Actions
♦ **ICO**: Initialize the simulator per Section 4.0.	
♦ **IPOI**: Assign team positions and conduct the SHIFT BRIEFING per Section 5.B.	♦ Assume assigned team positions.
♦ Allow crew 3-5 minutes to take turnover and assume the watch.	♦ Take turnover and review plant status. ♦ Assume the watch and inform examiner.
1. **SHIFT FOREMAN**: Direct secondary CRO to transfer ICS back to full automatic per 1105-4.	
NOTE: Delta-Tc station demand is initially at zero (0) as left following mantenance.	1.1 BOP - Reviews guidelines for returning ICS stations to AUTO per 1105-4, Appendix 7.
	1.2 BOP - Checks errors across all ICS stations in HAND, and recognizes error on FW loop masters.
	1.3 BOP - Raises Delta-Tc station demand to 50% to zero errors across FW loop masters.
	1.4 BOP - Transfers the ICS stations back to AUTO per 1105-4 in following order: a. FW-V-17A and 17B b. FW-V-16A and 16B c. FW Loop Masters A and B d. Delta-Tc e. FW-P-1A and 1B f. SG/Rx Master
	1.5 BOP - Verifies ICS Track alarm H-2-1 clears after SG/Rx Master is in AUTO.

NRC RO OPERATIONAL
SIMULATOR SCENARIO No. 1

Examiner Notes and Actions	Expected Operator Actions
2. **ICO**: Approximately one (1) minute after ICS is in full AUTO, or when directed by Examiner, activate EVENT #2 to cause MU-FT-42 failure high, and MU-V-32 to close in AUTO.	
	2.1 RO - Recognizes RCP seal injection flow transient by the following alarms and indications on CC: ◆ Alarms F-1-5, F-1-6 ◆ RC-18-DPI-1/2/4 off-scale low ◆ MU-42-FI1 indicates 80 gpm ◆ MU-V-32 station demand = zero (0)
NOTE: RCP total seal injection flow may still be monitored on PPC.	
	2.2 RO - Diagnoses actual loss of RCP seal injection caused by MU-V-32 closure.
SHIFT FOREMAN: After RO has diagnosed MU-V-32 closure as cause for loss of RCP seal injection, implement 1203-15 verify immediate actions, and direct follow-up actions.	
	2.3 RO - Transfers MU-V-32 station to HAND, and raises demand to restore RCP seal injection flow as directed by SRO per 1203-15.
	2.4 RO - Monitors RCP seal parameters (RC-18-DPI-1/2/4) and #1 seal water temperatures as seal injection is being restored.
	2.5 RO - Limits seal injection flow increase to limit cooldown rate on radial bearings to ≤1°F per minute per 1203-15.
	2.6 RO - Obtains approximately 38 gpm RCP seal injection flow as indicated on PPC, but leaves MU-V-32 in HAND until MU-FT-42 is fixed.

NRC RO OPERATIONAL
SIMULATOR SCENARIO No. 1

	Examiner Notes and Actions		Expected Operator Actions
3.	**ICO**: Approximately one (1) minute after RCP seal injection flow has been restored to normal, or when directed by Examiner, activate EVENT #3 to cause #1 seal failure on RC-P-1A.	3.1	RO - Diagnoses symptoms of RCP #1 seal failure on RC-P-1A by the following: ♦ Alarms F-1-6, F-1-4, F-1-3, D-2-2, and LWDS-1-5 (delayed) ♦ RC-18-DPI-1 (CC) off-scale low ♦ MU-13-DPI-1 (CC) goes low ♦ RC-P-1A seal leakoff flow high (>12 gpm) on PC recorder and PPC
		3.2	RO - Closes MU-V-33A on CC per 1203-16.
	NOTE: When MU-V-33A is closed, alarm F-1-4 will clear and MU-13-DPI-1 (CC) will go high.		
		3.3	RO - Recognizes requirement to reduce power and secure RC-P-1A within 30 minutes per 1203-16.
	SHIFT FOREMAN: Implement 1203-16 and direct **primary CRO** to reduce reactor power to 70% at 5% per minute per the manual actions.		
		3.4	RO - Sets ULD rate of change setpoint at 50 (5%/minute), and lowers ULD to approximately 60 (600 MW) to effect the power reduction.
		3.5	RO/BOP - Monitor critical parameters during the power reduction.
		3.6	RO/BOP - Verify that reactor power stabilizes at target power level (70%) and report to SF.
	SHIFT FOREMAN: Direct **primary CRO** to secure RC-P-1A.		
		3.7	RO - Secures RC-P-1A using its control switch on CC per 1103-6.

NRC RO OPERATIONAL
SIMULATOR SCENARIO No. 1

Examiner Notes and Actions	Expected Operator Actions
4. **ICO**: When RC-P-1A is secured, verify EVENT #4 inserts RC08B at 0% severity over 30 seconds to fail RC5A-TE3.	4.1 BOP - Monitors for automatic ICS re-ratio of main feedwater when RC-P-1A is secured.
	4.2 BOP - Recognizes SASS mismatch on RCS loop-A T-cold by alarm H-3-2 and indication on CC.
	4.3 BOP - Acknowledges high delta-Tc alarm H-2-4 and sustained RCS delta-Tc on CC indicator.
	4.4 RO - Responds to RCS temperature and pressure transient by verifying proper automatic operation of pressurizer heaters (CR) and spray valve, RC-V-1 (CC).
	4.5 BOP - Responds to SASS mismatch per H-3-2: ♦ Transfers both FW Loop Masters to HAND ♦ Selects alternate RCS loop-A T-cold, RC5A-TE1 by depressing its SASS selector pushbutton on CC
SHIFT FOREMAN: After secondary CRO diagnoses and initially responds to the SASS mismatch, implement H-3-2 alarm response and verify/direct actions as necessary.	
	4.6 BOP - Adjusts ICS FW Loop Master demands (decreases A-loop & increases B-loop) as necessary to obtain zero (0) degrees delta-Tc, while maintaining correct total FW flow for reactor power.
EXAMINERS: If reactor trips due to improper FW control, proceed to Event #6.	

NRC RO OPERATIONAL
SIMULATOR SCENARIO No. 1

	Examiner Notes and Actions		Expected Operator Actions
	EXAMINERS: It is not necessary for FW Loop Masters to be returned to AUTO prior to proceeding with next Event #5.	4.7	BOP - After correct FW flows have been obtained, checks for zero (0) error across FW Loop Masters and transfers both stations back to AUTO.
		4.8	BOP - Performs follow-up actions of H-3-2 as directed by the SRO for the SASS mismatch.
5.	**ICO**: After RCS temperatures are stable with zero (0) delta-Tc, or when directed by Examiner, activate EVENT #5 to insert TH06 at 0.15% severity (1500 gpm) over 100 seconds.	5.1	RO/BOP - Diagnose RCS leak into containment by the following indications: ◆ Increased RB radiation levels (PRF) and RMS alarms (C-1-1) ◆ Decreasing pressurizer level (CC) ◆ Decreasing makeup tank level (CC) ◆ Increasing RB temperatures & pressures
		5.2	RO - Operates makeup system to provide more makeup flow to maintain pressurizer level: ◆ Starts MU-P-1A, DC-P-1A, and DR-P-1A using their control switches on CC ◆ Opens MU-V-217 using its pushbutton on CC to augment normal makeup line flow
		5.3	RO/BOP - Recommend reactor trip or manually trip reactor based upon quickly degrading plant conditions and impending safety system actuations (RPS,ESAS).
	SHIFT FOREMAN: If either CRO recommends or initiates manual reactor trip due to quickly degrading plant conditions, concur with their action or recommendation.		

NRC RO OPERATIONAL
SIMULATOR SCENARIO No. 1

Examiner Notes and Actions		Expected Operator Actions
NOTE: MU-P-1C will fail to automatically start on any ESAS actuation. See Event #7 for expected RO actions.	5.4	RO - With pressurizer level dropping below 150" and reactor power greater than 25%, implements 1210-10 Pressurizer Level Guide as follows: ◆ Manually trips reactor by depressing both trip pushbuttons on CC, and ◆ Manually initiates HPI by depressing 1600# or 4# manual ESAS pushbuttons for both trains on CC and CR
EXAMINERS: Refer to copy of 1210-1.	5.5	RO/BOP - Perform immediate manual actions of 1210-1 for the reactor trip.
6. NOTE: The main turbine will fail to automatically trip when reactor trips.	6.1	BOP - Recognizes failure of main turbine to automatically trip when reactor trips by: ◆ No K-1-1 alarm (Turbine Trip) ◆ Turbine stop valves open on CL
NOTE: 6.2 is a Critical Task.	**6.2**	**BOP - Verifies reactor power is less than 10% on CC digital indicators, and manually trips main turbine by depressing its trip pushbutton on CL.**
	6.3	BOP - Verifies main turbine is tripped per 1210-1 by verifying the turbine stop valves are closed and generator and field breakers open (CC).
	6.4	BOP/RO - Continue immediate actions of 1210-1 for the reactor trip. (see attached)
NOTE: If the reactor tripped automatically during Event #4, then following Event #6 go to and insert Event #5.		

NRC RO OPERATIONAL
SIMULATOR SCENARIO No. 1

	Examiner Notes and Actions		Expected Operator Actions
7.	NOTE: MU-P-1C will fail to automatically start on any ESAS actuation.	7.1	RO - Monitors ESAS component status on ESAS panel (PCR) to verify proper safety system response per 1210-1.
		7.2	RO - Diagnoses failure of MU-P-1C to automatically start as required for ES, by its green breaker status lamp on CR or its amber ES status lamp on PCR.
		7.3	RO - Manually starts MU-P-1C using its control switch on CR, per 1210-1 and 1210-10.
		7.4	RO - Verifies MU-P-1C starts by its red breaker status indication on CC and its blue ES status lamp on PCR.
		7.5	RO - Verifies A and B train HPI flows exist on all four lines using their indicators, MU-FI-1126 and 1127 on CC, MU-FI-1128 and 1129 on CR.
	SHIFT FOREMAN: Following all 1210-1 immediate actions by CROs, announce to team and commence 1210-1 immediate action verification.	7.6	RO/BOP - Verify 1210-1 immediate actions with Shift Foreman as read by Shift Foreman, and continue to monitor plant conditions.
8.	NOTE: The LOCA size will eventually result in loss of 25°F subcooled margin.	8.1	BOP/RO - Diagnose loss of 25°F subcooled margin by the following indications: ♦ Alarm G-1-8 ♦ One or both Margin to Saturation meters on PCL indicate less than 25°F

NRC RO OPERATIONAL
SIMULATOR SCENARIO No. 1

Examiner Notes and Actions		Expected Operator Actions
NOTE: 8.2 is a Critical Task.	8.2	**RO - Performs 1210-2 immediate actions for loss of 25°F subcooled margin as follows:** ♦ **Secures RC-P-1B, RC-P-1C, and RC-P-1D using their control switches on CC** ♦ **Verifies HPI flow on all four HPI flow meters MU-FI-1126 and 1127 on CC, and MU-FI-1128 and 1129 on CR.**
	8.3	BOP - Performs 1210-2 immediate actions for loss of 25°F subcooled margin as follows: ♦ Verifies EF-P-1, EF-P-2A, and EF-P-2B start by indications of speed, breaker status lamps, and pump discharge pressures (on CL and CC) ♦ Verifies EFW flow to both SGs as indicated on EF-FI-779/788 for A-SG, and on EF-FI-782/791 for B-SG (on CL and CC) ♦ Verifies SG levels increasing toward 75-85% on operating range level indications LI-1103 for A-SG and LI-1105 for B-SG (both on CC)
SHIFT FOREMAN: After 1210-2 immediate actions have been performed by CROs, transition from 1210-1 to 1210-2, verify immediate actions of 1210-2, and direct CROs in 1210-2 follow-up actions.	8.4	RO/BOP - Verify 1210-2 immediate actions as read by Shift Foreman, and perform 1210-2 follow-up actions as directed by SF.
	8.5	RO - Operates RC and MU system valves from CC as directed by the Shift Foreman per 1210-2 follow-up actions.

NRC RO OPERATIONAL
SIMULATOR SCENARIO No. 1

Examiner Notes and Actions		Expected Operator Actions
	8.6	BOP - Recognizes requirement to throttle EFW flows per 1210-10 EFW Throttling Criteria, due to SG pressure response to the EFW flow.
	8.7	BOP - Throttles EFW flows per 1210-10 as follows: ♦ Transfers EF-V-30A, 30B, 30C, and 30D controllers to manual (CL and CC) ♦ Operates EF-V-30A/D and EF-V-30B/C controllers as necessary to throttle EFW flows, while ensuring both SG levels are still increasing toward 75-85% setpoint with RCS subcooled margin < 25°F
SHIFT FOREMAN: Continue to direct 1210-2 and 1210-6 follow-up actions, and direct HPI throttling for PTS considerations when at least 25°F subcooled margin has been regained.	8.8	BOP - Continues to feed and steam both steam generators as necessary to maintain them as heat sinks per 1210-6, and attempts to develop RCS natural circulation per 1210-10.
NOTE: When ESAS trains A and B are clear, 2 of 3 sets of block loading sequence blue lamps will be extinguished for each train on PCR.	8.9	RO/BOP - When directed by Shift Foreman, clear ESAS signals for HPI throttling as follows: ♦ Bypass 1600# auto channels, 3 on train-A and 3 on train-B, by depressing their bypass pushbuttons on CC and CR ♦ Defeat 4# auto channels, 2/3 on train-A and 2/3 on train-B, by depressing their defeat pushbuttons on CC and CR ♦ Defeat and reset 1600# manual channels 3 on train-A and 3 on train-B, by depressing their defeat/enable pushbuttons on CC and CR

NRC RO OPERATIONAL
SIMULATOR SCENARIO No. 1

Examiner Notes and Actions		Expected Operator Actions
NOTE: 8.10 is a Critical Task.	8.10	**RO - When directed by Shift Foreman, throttles HPI for PTS concerns per 1210-10 as follows:** ♦ **Verifies that at least 25°F subcooled margin has been regained as indicated by PPC point C4006** ♦ **Operates MU-V-16A, 16B, 16C, and 16D using their pushbuttons on CC and CR as necessary to control HPI flows** ♦ **Reopens MU-V-36 and MU-V-37 using their pushbuttons on CC prior to throttling below 100 gpm/HPI pump as indicated on MU-FI-1126 and 1127 on CC for MU-P-1A, and MU-FI-1128 and 1129 on CR for MU-P-1C**
SHIFT FOREMAN: Direct primary CRO to throttle HPI and control RCS subcooled margin between 30°F and 70°F, to comply with 1210-10 PTS Guideline.		
SHIFT FOREMAN: Continue to direct CROs in 1210-6 follow-up actions for the small break LOCA cooldown.		
	8.11	RO/BOP - Perform 1210-6 follow-up actions as directed by the Shift Foreman for the small break LOCA cooldown.
NOTE: RCP Restart Criteria of 1210-10 will not be met during this scenario.		

NRC RO OPERATIONAL
SIMULATOR SCENARIO No. 1

7.0 TERMINATION POINT

When all of the following conditions exist:

1. Examinees had opportunity to perform all critical tasks as designed.
2. RCS pressure (subcooled margin) is being controlled by HPI throttling.
3. Small break LOCA cooldown at approximately 100°F/hour has commenced per 1210-6.
4. Examiners agree to terminate.

ON-LINE MAINTENANCE RISK MANAGEMENT

ON-LINE RISK # 58 **Rev : 0**

RISK EVALUATION SUMMARY - RR-P-1A

Risk Achievement Worth (RAW) is the factor increase in core damage frequency resulting when the structure, system, or component (SSC) is determined to be continuosly failed.

Assumptions:

RR-P-1A will be removed from service for shaft bearing replacement. Duration is scheduled for approximately 16 hours.

1. LIST THE TYPE OF RISK CONCERNS EVALUATED

Reduction in energy removal from containment post accident conditions.
Failure of containment post accident.

2. LIST IMPORTANT SSCs WHICH NEED TO BE MAINTAINED OPERABLE

RB Emergency Cooling Train "B"
Building Spray Trains "A" and "B"
DC Power Trains "A" and "B"
AC Power Trains "A" and "B"

3. LIST IMPORTANT MANUAL ACTIONS WHICH SHALL BE BRIEFED WITH THE APPROPRIATE PERSONNEL

Verify or align 1C ES Valves MCC to the 1S Bus

If an ES actuation occurs direct immediate restoration of Emergency Cooling Train "A".

4. IDENTIFY CONTINGENCY PLANS OR COMPENSATORY ACTIONS USED TO REDUCE RISK

COMPENSATORY ACTIONS (PRIOR TO/IN PREPARATION FOR OUTAGE):

Verify of align 1C ES Valves MCC to the 1S Bus

CONTINGENCY ACTIONS:

5. EVALUATION APPROVALS

- ○ 1. Risk found acceptable
- ● 2. Risk found acceptable with contingencies identified
- ○ 3. Risk unacceptable,

Signature of Evaluator: FOR TRAINING on 02/13/2000

Signature of Director: FOR TRAINING on 02/13/2000

CC: Job Package
Shift Supervisor Clipboard
Operations Department General Files
STA

NRC RO OPERATIONAL
SIMULATOR SCENARIO No. 2

MAIN GENERATOR PLACED ON LINE DURING PLANT STARTUP, AND SECONDARY PRESSURE TRANSIENT CAUSING OTSG TUBE LEAK WITH PRIMARY INVENTORY & PRESSURE CONTROL FAILURES

DEVELOPED BY/DATE: _____ 12/15/99

REVIEWED BY/DATE: _____ 12/15/99

APPROVED BY/DATE: _____ 12/15/99
(OPERATIONS TRAINING MANAGER)

NRC RO OPERATIONAL
SIMULATOR SCENARIO No. 2

SCENARIO CHANGE HISTORY PAGE

REVISION	DATE	REFERENCE TITLE	DESCRIPTION (Include AI # if appropriate)

NRC RO OPERATIONAL
SIMULATOR SCENARIO No. 2

1.0 GENERAL DESCRIPTION OF SCENARIO

Reactor at 14% power, 300 EFPD, during a xenon-free plant startup.

Main turbine-generator is synchronized and loaded.

Power is increased and main turbine is placed in auto.

Turbine header pressure instrument fails low causing SASS mismatch and secondary pressure transient.

A 45 gpm tube leak occurs on A-SG.

Plant shutdown is performed per 1210-5.

One turbine bypass valve fails open when main turbine is tripped.

Pressurizer level transmitter fails high as RCS temperature is reduced during reactor shutdown.

MU-P-1A trips upon start.

RC-V-1 does not open to reduce subcooled margin per 1210-5.

Plant cooldown is commenced after subcooled margin is minimized.

Estimated scenario time - 80 minutes. **3 Critical Tasks**

2.0 REFERENCES

A. 10 CFR 55.45 Operating Tests, (a) Content (3), (4), (5), (6), (7), (8), (9), (12), (13)

B. PROCEDURES

1102-2	Plant Startup (sign-off copy required for crew)
1106-1	Turbine Generator (sign-off copy required for crew, and copy required for examiner)
1106-2	Condensate System (sign-off copy required for crew)
1106-3	Feedwater System (sign-off copy required for crew)
1104-2	Makeup and Purification System
1210-5	OTSG Tube Leakage
1102-10	Plant Shutdown
1202-12	Excessive Radiation Levels
1202-29	Pressurizer System Failure
1210-1	Reactor Trip (copies required for examiners)

Alarm Responses

NRC RO OPERATIONAL
SIMULATOR SCENARIO No. 2

3.0 TASKS

0450050101	Synchronize and load turbine generator
0450060101	Increase load on turbine generator
341C020101	Perform a plant startup
0150030101	Operate the ICS in hand
0150040101	Transfer ICS stations to automatic
0158020401	Respond to a SASS mismatch/actuation
000C220501*	**Respond to OTSG tube leak**
0000610501	Respond to excessive radiation levels
3418000101	Perform plant power changes
0450100101	Unload turbine generator
0450120101	Shutdown the turbine generator
0008370501*	**Isolate affected OTSG during excessive heat transfer**
0010290101*	**Operate the CRD system to shutdown the reactor**
0008140401	Respond to a malfunction in PZR level indication or control
0000070501	Respond to a reactor trip as the primary CRO
0000080501	Respond to a reactor trip as the secondary CRO
0130040101	Bypass or defeat an ES channel

*** Critical Task**

NRC RO OPERATIONAL
SIMULATOR SCENARIO No. 2

4.0 SIMULATOR INITIALIZATION

A. IC12 14% reactor power, MOC, xenon-free, main turbine at 1800 rpm.

Ensure MSK2609A = 214.7, then place simulation in RUN and ensure the following:

1. Main Feedwater Pump is running on main steam (AS-V-5A closed)
2. Gland steam is supplied by main steam (AS-V-8 closed)

B. EVENT TRIGGERS

#6 TC:TRIP
Command: IMF MS09D 100

#7 CRQCRNRM<0.1
Command: IMF RC04A 0 600

#8 MUPDISA>1000
Command: IMF MU01A

#9 RD:CFTRP

C. MALFUNCTIONS

MS01A MS10A-PT1 failure; insert at 0% severity over 20 second ramp on Event #3.
TH16A A-SG tube leak; insert at 0.3% severity (45 gpm) on Event #4.

D. REMOTE FUNCTIONS

None

E. OVERRIDES

02A5S06-ZDIPBORCV1 OPN CC RC-V-1 OPEN PB; insert OFF on Event #9.

F. MONITOR

Set MSK2609A = 214.7 immediately (auxiliary steam pressure).

NRC RO OPERATIONAL
SIMULATOR SCENARIO No. 2

5.0 SCENARIO PREVIEW

A. EXAMINER PREVIEW

Plant at 14% power, during xenon-free plant startup at MOC. Main Turbine is at 1800 rpm.

1. Secondary CRO will synchronize and load turbine-generator per 1106-1.
2. Secondary CRO will increase reactor power using Reactor Demand to obtain 579°F T-ave, then transfer ICS stations to auto, including main turbine.
3. Selected turbine header pressure transmitter (MS10A-PT1) fails low over 20 seconds. The secondary CRO must respond to the SASS mismatch per H-3-2 by assuming hand control of main turbine and selecting good transmitter.
4. A 45 gpm tube leak occurs on A-SG. The team must respond to the excessive radiation levels per 1202-12, and to the tube leak per 1210-5.
5. The primary CRO must operate ICS stations and control rods to shutdown reactor per 1210-5. **(CT)**
6. When the main turbine is tripped at 15% reactor power, MS-V-3D (A-SG) fails 100% open and must be isolated locally. The secondary CRO must then control A-SG pressure. **(CT)**
7. At 10% reactor power during the shutdown, selected pressurizer level transmitter (RC1-LT1) fails to 400" indicated level over 600 seconds. The primary CRO must respond per 1202-29 to control RCS makeup in hand, then select alternate pressurizer level instrument.
8. MU-P-1A trips when it is started for augmented makeup flow during reactor shutdown or after reactor trip per 1210-1. The primary CRO must start MU-P-1C and use HPI as necessary to maintain RCS inventory.
9. Following reactor shutdown when RCS subcooled margin is reduced per 1210-5, RC-V-1 will not manually open. The primary CRO must operate pressurizer vent and/or PORV as necessary to reduce subcooled margin. **(CT)**

NRC RO OPERATIONAL
SIMULATOR SCENARIO No. 2

B. SHIFT BRIEFING

1. Reactor is at 14% power during a xenon-free startup at 300 EFPD.

2. The main turbine is at 1800 rpm and ready to load.

3. The plant tripped 80 hours ago due to a main generator relay failure.

4. FW-P-1A and gland steam are currently supplied by main steam per 1102-2.

5. Continue plant startup by synchronizing and loading main turbine-generator, and increasing power per 1102-2.

NRC RO OPERATIONAL
SIMULATOR SCENARIO No. 2

6.0 SEQUENCE OF EVENTS

Examiner Notes and Actions	Expected Operator Actions
◆ **ICO**: Initialize the simulator per Section 4.0.	
◆ **IPOI**: Assign team positions and conduct the SHIFT BRIEFING per Section 5.B.	◆ Assume assigned team positions.
◆ Provide Shift Foreman with sign-off copies of 1102-2, 1106-1, 1106-2, and 1106-3.	◆ Take turnover and review plant status.
◆ Allow crew 3-5 minutes to take turnover and assume the watch.	◆ Assume the watch and inform examiner.
1. **SHIFT FOREMAN**: Direct secondary CRO actions to synchronize and initially load main turbine-generator per 1106-1.	
	1.1 BOP – Operates main generator excitation controls on CL to establish main generator voltage per 1106-1.
EXAMINER: Refer to a copy of 1106-1 to follow specific control manipulations.	
	1.2 RO – Operates ICS Reactor Demand station on CC as necessary to maintain reactor power during turbine-generator initial loading.
	1.3 BOP – Operates Digital Turbine Control System (DTCS), main generator breakers, and main generator voltage controls (all on CL) to synchronize and load main generator to minimum load (40MW) per 1106-1.

NRC RO OPERATIONAL
SIMULATOR SCENARIO No. 2

Examiner Notes and Actions	Expected Operator Actions
2. **SHIFT FOREMAN**: After turbine-generator is loaded to 40 MW, direct CROs to continue power escalation at less than 30% power per hour (MMRs) per 1102-2.	
	2.1 BOP – Operates Reactor Demand station (CC), to create positive neutron error such that control rods pull and reactor power increases.
SHIFT FOREMAN: Direct primary CRO to maintain pressurizer level within Figure 1 of 1102-2, bleeding to C-RCBT as necessary. Provide Figure 1 to primary CRO.	
	2.2 RO – Operates the following makeup and LWDS system components as necessary to maintain pressurizer level increase within Figure 1 as T-ave increases, and to maintain makeup tank level within Figure 1 of 1104-2: ♦ MU-V-17 ICS station setpoint (CC) ♦ Bleed Tank Select switch on LWDS ♦ MU-V-8 (THRU/BLEED) pushbuttons (CC) ♦ MU-V-5 demand setpoint (CC)
SHIFT FOREMAN: Direct secondary CRO in operation of ICS controls per 1102-2 when RCS T-ave reaches 579°F.	
	2.3 BOP – Transfers Reactor Demand station to auto when T-ave reaches 579°F, per 1102-2.
	2.4 BOP – Increases demand on SG/Rx Master ICS station (CC) until CRD out motion is obtained, then transfers SG/Rx Master to auto per 1102-2.
	2.5 BOP – Operates turbine ICS station (CL) to increase load until turbine bypass valves (MS-V-3s) close, then transfers turbine to auto.

NRC RO OPERATIONAL
SIMULATOR SCENARIO No. 2

Examiner Notes and Actions	Expected Operator Actions
3. **ICO**: Approximately one (1) minute after turbine is in auto, or when directed by Examiner, activate EVENT #3 to cause selected turbine header pressure transmitter, MS10A-PT1, to fail low (600 psig) and cause SASS mismatch.	
	3.1 BOP – Responds to SASS Mismatch alarm (H-3-2), and diagnoses mismatch on turbine header pressure recorder on CC.
NOTE: Large header pressure error for greater than 10 seconds will cause turbine ICS station to revert to HAND, and cause alarm H-3-3.	
	3.2 BOP – Diagnoses main turbine ICS station (CL) reverted to HAND, by alarm H-3-3 and white lamp illuminated on turbine ICS station.
	3.3 BOP – Assumes hand control of main turbine ICS station to control header pressure and return it to 885 psig per H-3-3.
SHIFT FOREMAN: Implement H-3-2 and H-3-3 after secondary CRO performs initial manual actions, and verify/direct the actions therein.	
	3.4 RO – Responds to OTSG pressure transient effects on RCS temperature, pressure, inventory, and reactor power. ◆ Verifies automatic response of MU-V-17 ◆ Verifies automatic response or RC-V-1 (pressurizer spray on CC) ◆ Verifies automatic response of PZR heaters on CR
	3.5 BOP – Selects alternate turbine header pressure instrument per H-3-2, by depressing its SASS pushbutton on CC.

NRC RO OPERATIONAL
SIMULATOR SCENARIO No. 2

Examiner Notes and Actions		Expected Operator Actions
	3.6	BOP – Obtains zero (0) header pressure error as indicated on turbine ICS station (50% in Header Pressure Error position), and with turbine bypass valves closed, transfers main turbine ICS station back to auto.
SHIFT FOREMAN: Direct secondary CRO in follow-up actions for SASS Mismatch per H-3-2.		
	3.7	BOP – Performs follow-up actions of H-3-2 as directed by the Shift Foreman.
4. **ICO**: After main turbine is back in automatic, or when directed by Examiner, activate EVENT #4 to insert a 45 gpm tube leak in A-SG.		
	4.1	BOP/RO – Diagnose indications of a tube leak into A-SG by the following: ♦ High radiation alarms (C-1-1) on main condenser off-gas monitors RM-A-5 & 15, and on A-SG steam line monitor RM-G-26 (all monitors in upper right of PRF) ♦ Increase in RCS makeup flow and decrease in makeup tank level (CC) with stable RCS temperature
	4.2	BOP/RO – Perform immediate actions of 1202-12 for the excessive radiation levels: ♦ Announce radiation monitor alarms on plant page and radio ♦ Mark meteorological chart (PLF) and radiation monitor chart (PRF) ♦ Contact Group Rad Con Supervisor

NRC RO OPERATIONAL
SIMULATOR SCENARIO No. 2

Examiner Notes and Actions	Expected Operator Actions
SHIFT FOREMAN: Following CRO actions for the excessive radiation levels, implement 1202-12 and C-1-1 and verify/direct actions.	
	4.3 RO – Performs actions of C-1-1 to validate and quantify tube leak.
	4.4 RO – When tube leak is validated, recommends plant shutdown per 1210-5, and may close MU-V-3 (CC) to isolate letdown if necessary for RCS inventory control.
5. **SHIFT FOREMAN**: After primary CRO validates and quantifies SG tube leakage, implement 1210-5 and direct **primary CRO** to commence plant/reactor shutdown per 1210-5 at 3-5% per minute.	
NOTE: 5.1 is a Critical Task.	**5.1 RO - Effects plant shutdown by performing the following per 1210-5:** ♦ **Sets ULD rate of change at 30-50%** ♦ **Reduces ULD input to reduce reactor power** ♦ **When OTSGs reach low level limits (alarms H-1-6 and H-1-7), transfers SG/Rx Master and Reactor Demand stations to HAND** ♦ **Transfers the Diamond Rod Control panel to manual, and inserts control rods to continue reactor shutdown**

NRC RO OPERATIONAL
SIMULATOR SCENARIO No. 2

Examiner Notes and Actions	Expected Operator Actions
SHIFT FOREMAN: If primary CRO requests which RC bleed tank to select for feed, direct primary CRO to use B-RCBT.	
	5.2 RO - Operates makeup system and LWDS controls as necessary to maintain RCS and makeup system inventory during reactor power and T-ave reduction with 45 gpm leak: ♦ Opens MU-V-217 using its pushbutton on CC to augment normal makeup line flow through MU-V-17 ♦ Operates Feed Tank Select and Feed Pump Select switches on LWDS to align selected RC bleed tank & pump for feed ♦ Operates makeup system batch controller (CC) and opens MU-V-10 (CC) to enable a batch feed ♦ Operates Waste Transfer (feed) Pump control on LWDS to start batch feed to makeup tank ♦ Operates makeup batch controller and/or MU-V-14A (CC) as necessary to maintain makeup tank within limits of 1104-2, Figure 1
	5.3 BOP - Operates FW-P-1A ICS station demand (CL) as necessary to maintain at least 25" main feedwater valve delta-p on SP-11A/B-DPT2.
SHIFT FOREMAN: Continue to direct 1210-5 actions to shut down plant and reactor, and at 15% reactor power direct **secondary CRO** to unload and trip main turbine.	

NRC RO OPERATIONAL
SIMULATOR SCENARIO No. 2

Examiner Notes and Actions	Expected Operator Actions
	5.4 BOP - Secures main turbine at 15% power as follows: (controls on CL) ♦ Transfers main turbine ICS station to hand ♦ Decreases turbine ICS demand to unload generator to 0 MW, while verifying that turbine bypass valves control SG pressures ♦ Manually trip main turbine by depressing turbine TRIP button
6. ICO: When the main turbine is tripped, verify EVENT #6 activates to cause MS-V-3D to fail 100% open.	
NOTE: This MS-V-3D failure may not be diagnosed until lower in reactor power during reactor shutdown, or possibly not until MS-V-3 ICS stations are taken to hand for reactor trip per 1210-5.	
	6.1 BOP - Recognizes lower demand on ICS station for MS-V-3D/E/F as compared to demand for MS-V-3A/B/C on B-SG, and/or notices MS-V-3E and 3F closed but MS-V-3D open.
	6.2 BOP - Diagnoses failure of MS-V-3D by: ♦ Zero (0) demand on ICS station for MS-V-3D/E/F (CC) ♦ Red open indication for MS-V-3D (CC) ♦ A-SG pressure decreasing below desired pressure.
NOTE: 6.3 is a Critical Task.	**6.3 BOP - Respond to MS-V-3D failure by directing auxiliary operator to locally isolate or manually close MS-V-3D.**

NRC RO OPERATIONAL
SIMULATOR SCENARIO No. 2

Examiner Notes and Actions		Expected Operator Actions
ICO-ROLE PLAY: As AO if directed to locally isolate MS-V-3D, after a 2-3 minute time delay use **MSR10** to close MS-V-11D. If directed to manually close MS-V-3D, after a 2-3 minute time delay: insert **MSR36** at 100%, change **MSR35** to MANUAL, then insert **MSR36** at 0% over 30 second ramp. After the appropriate task is complete, report task complete to control room.		
	6.4	BOP - Recognize MS-V-3D isolation by proper A-SG pressure control by MS-V-3E/F. Recognize MS-V-3D manual closure by green position indication on CC, and proper A-SG pressure control by MS-V-3E/F.
	5.5	RO - Operates CRD panel as necessary to reduce reactor power until T-ave = 545°F.
ICO: When reactor power is less than 10% (CRQCRNRM<0.1), verify EVENT #7 activates to fail selected pressurizer level transmitter to 400" over 600 seconds.		
	7.1	RO - Diagnose decreasing makeup flow (CC) to RCS and increasing makeup tank level (CC), and recognize increase in pressurizer level RC1-LT1 on recorder (CC), with decrease in pressurizer level on digital, LI-777A (CC).
	7.2	RO - Diagnose probable failure of RC1-LT1 on pressurizer level recorder by conflicting indications of: ♦ Increase on RC1-LT1 recorder level (CC) but decrease on LI-777A digital level (CC) ♦ Increase on RC1-LT1 recorder level but decreasing RCS temperature and pressure

NRC RO OPERATIONAL
SIMULATOR SCENARIO No. 2

Examiner Notes and Actions		Expected Operator Actions
	7.3	RO - Respond to failure of RC1-LT1 per 1202-29, Section D as follows: ◆ May close MU-V-3 (CC) to isolate RCS letdown if not previously done per 1210-5 ◆ Transfer MU-V-17 controller to HAND (CC), and increase MU-V-17 demand to obtain required makeup flow and maintain real pressurizer level on LI-777A ◆ Select alternate pressurizer level for recorder, RC1-LT3 (CC) ◆ Select alternate pressurizer temperature, RC2-TE2 (CC)
SHIFT FOREMAN: After primary CRO has performed 1202-29, Section D immediate manual actions, implement 1202-29, Section D and verify/direct the immediate actions.		
	7.4	RO - Verify or perform immediate actions for RC1-LT1 failure as read by Shift Foreman.
	7.5	RO - Following selection of RC1-LT3, check level error on MU-V-17 controller, and with zero error at appropriate level setpoint, transfer MU-V-17 back to auto.
SHIFT FOREMAN: Continue to direct CRO actions per 1210-5 to shutdown (trip) reactor and control SG pressures to prevent MSSV lift.		
	5.6	BOP - Transfers turbine bypass valve (MS-V-3) ICS stations on CC to hand prior to reactor trip, per 1210-5.
EXAMINERS: Refer to copy of 1210-1 for required operator actions.	5.7	RO - At 545°F T-ave, manually trips reactor per 1210-5 and commences 1210-1 immediate actions.

NRC RO OPERATIONAL
SIMULATOR SCENARIO No. 2

Examiner Notes and Actions		Expected Operator Actions
EXAMINER: When RO starts MU-P-1A per 1210-1 immediate actions, it will trip. See EVENT #8 for operator actions.		
	5.8	BOP - Operates turbine bypass valve ICS stations in HAND to stabilize SG pressures and prevent MSSV lift (at >1040 psig).
	5.9	BOP - Performs 1210-1 immediate actions for the reactor trip: verifies turbine tripped, and ensures main feedwater controlling SG levels at 25" on startup range indications (CC).
8. **ICO**: When MU-P-1A is started, verify it trips by EVENT #8 activation.	8.1	RO - Starts MU-P-1A, DC-P-1A, and DR-P-1A using their extension controls on CC, per 1210-1 immediate actions.
	8.2	RO - Diagnoses MU-P-1A trip by the following alarms and indications: ♦ Alarms B-1-2 and B-2-2 ♦ Green and amber lamps for MU-P-1A breaker status above its control switch on CC ♦ Zero (0) amps indicated on MU-P-1A ammeter above its control switch on CC
	8.3	RO - Starts MU-P-1C, DC-P-1B, and DR-P-1B using their extension controls on CR.
	8.4	RO - Opens HPI valves MU-V-16C/D using their pushbuttons on CR, to provide additional makeup flow to RCS as necessary to maintain pressurizer level per 1210-1.

NRC RO OPERATIONAL
SIMULATOR SCENARIO No. 2

Examiner Notes and Actions		Expected Operator Actions
EXAMINERS: Refer to copy of 1210-1 for required operator actions.		
	5.10	RO/BOP - Perform remaining immediate actions for reactor trip per 1210-1.
SHIFT FOREMAN: Following all 1210-1 immediate actions by CROs, announce to team and commence 1210-1 immediate action verification.		
	5.11	RO/BOP - Verify 1210-1 immediate actions as read by Shift Foreman, and continue to monitor plant conditions.
SHIFT FOREMAN: Transition back to 1210-5 from 1210-1, and continue directing CROs in 1210-5 follow-up actions after reactor trip.		
	5.12	BOP - Operates MS-V-3 ICS controllers (CC) as necessary to steam both OTSGs and reduce RCS T-hot below 540°F per 1210-5.
ICO: Verify EVENT #9 activated when reactor was tripped, to fail RC-V-1 OPEN pushbutton.		
9. **SHIFT FOREMAN**: Direct primary CRO to secure pressurizer heaters and commence maximum pressurizer spray to reduce RCS subcooled margin below 70°F, but not lower than 40°F.		
	9.1	RO - Secures all pressurizer heaters by turning control switches for Banks 1, 2, 3, 4, and 5 to OFF on CR.
	9.2	RO - Transfers RC-V-1 control on to MAN, and depresses OPEN pushbutton for RC-V-1 (CC).

NRC RO OPERATIONAL
SIMULATOR SCENARIO No. 2

Examiner Notes and Actions		Expected Operator Actions
	9.3	RO - Diagnoses and reports failure of RC-V-1 to open as indicated by no OPEN red lamp illuminated when pushbutton was depressed.
SHIFT FOREMAN: When primary CRO reports RC-V-1 failure to open, direct primary CRO to use pressurizer vent and/or PORV to reduce RCS subcooled margin.		
NOTE: 9.4 is a Critical Task.	9.4	**RO - Operate pressurizer vent valves RC-V-44 (PC) and RC-V-28 (CC), and/or PORV (CC) to reduce RCS subcooled margin to between 40°F and 70°F as indicated on Margin To Saturation meters on PCL: TI-977 and TI-978.**
SHIFT FOREMAN: Direct CROs to bypass 1600# ESAS channels when BYPASS PERMITS are obtained during RCS pressure reduction.		
	9.5	RO/BOP - When 1600# ESAS channel bypass permits are obtained as indicated by the white BYPASS PERMIT lamps illuminated for channels RC-1A, 2A, and 3A (CC) and RC-1B, 2B, and 3B (CR), perform the following: ♦ Depress BYPASS pushbuttons for RC-1A, 2A, and 3A on CC, and verify yellow BYPASS lamps illuminate ♦ Depress BYPASS pushbuttons for RC-1B, 2B, and 3B on CR, and verify yellow BYPASS lamps illuminate

NRC RO OPERATIONAL
SIMULATOR SCENARIO No. 2

7.0 TERMINATION POINT

When all of the following conditions exist:

1. Examinees had opportunity to perform all critical tasks as designed.
2. RCS subcooled margin has been minimized (<70°F), and 1600# ESAS channels are bypassed.
3. Crew is preparing to commence plant cooldown per 1210-5.
4. Examiners agree to terminate.

NRC RO OPERATIONAL SIMULATOR SCENARIO No. 3

MAKEUP PUMPS SHIFTED, MAKEUP SYSTEM LEAK REQUIRING PLANT SHUTDOWN, TURBINE TRIP AT 40% POWER, AND MAIN STEAM LINE BREAK OUTSIDE CONTAINMENT CAUSING EXCESSIVE PRIMARY TO SECONDARY HEAT TRANSFER

DEVELOPED BY/DATE: 12-16-99

REVIEWED BY/DATE: 12/16/99

APPROVED BY/DATE: 12/17/99
(OPERATIONS TRAINING MANAGER)

NRC RO OPERATIONAL
SIMULATOR SCENARIO No. 3

SCENARIO CHANGE HISTORY PAGE

REVISION	DATE	REFERENCE TITLE	DESCRIPTION (Include AI # if appropriate)

NRC RO OPERATIONAL
SIMULATOR SCENARIO No. 3

1.0 GENERAL DESCRIPTION OF SCENARIO

Plant at 100% power, MOC, with IA-P-4 out of service.

Operating makeup pumps are shifted to remove MU-P-1B from service.

A makeup system leak occurs downstream of MU-V-17 and MU-FT-24A fails low.

Normal makeup line must be isolated, and management orders plant shutdown.

As FW-P-1A is unloaded to secure it, the selected B-train MFW valve d/p transmitter fails low.

The main generator and turbine trips at 40% power.

A main steam line break on A-SG occurs outside containment in Intermediate Building.

The reactor will trip automatically if not tripped manually.

FW-V-5A breaker trips and HSPS fails to close FW-V-16A and 17A on low SG pressure.

MU-V-16C will not close upon demand to secure HPI.

Plant will be stabilized with A-SG isolated.

Estimated scenario time - 70 minutes. **3 Critical Tasks**

2.0 REFERENCES

A. 10 CFR 55.45 Operating Tests, (a) Content (3), (4), (5), (6), (7), (8), (9), (12), (13)

B. PROCEDURES

1104-25	Instrument and Control Air System
1104-2	Makeup and Purification System
1102-10	Plant Shutdown
1106-3	Main Feedwater
1203-24	Steam Leak
1210-1	Reactor Trip (copies required for examiners)
1210-3	Excessive Primary to Secondary Heat Transfer (copies required for examiners)
1210-10	Abnormal Transients Rules, Guides, and Graphs

Alarm Responses

NRC RO OPERATIONAL
SIMULATOR SCENARIO No. 3

3.0 TASKS

004C020101	Perform shifting of makeup pumps
0000590501*	**Respond to accidental liquid radioactive water release (RCS)**
3418000101	Perform plant power changes
0150030101	Operate the ICS in hand
0598050101	Manually operate a main feedwater pump
0158020401	Respond to a SASS mismatch/actuation
0008310501	Respond to a turbine trip below the anticipatory trip setpoint
0000400501	Respond to a steam leak
0000070501	Respond to a reactor trip as the primary CRO
0000080501	Respond to a reactor trip as the secondary CRO
0008370501*	**Isolate the affected OTSG during excessive primary to secondary heat transfer**
000C200501	Respond to excessive primary to secondary heat transfer
0618000501	Respond to an emergency feedwater actuation
0130040101	Bypass or defeat an ES channel
004C040101*	**Throttle high pressure injection**

*** Critical Task**

NRC RO OPERATIONAL
SIMULATOR SCENARIO No. 3

4.0 SIMULATOR INITIALIZATION

A. IC16 100% power, steady-state, MOC.

Place simulation in RUN and perform the following to remove IA-P-4 from service per 1104-25:

1. Start IA-P-1A in **HAND** using **IAR01**.
2. Verify or place IA-P-1B in **AUTO** using **IAR02**.
3. **OPEN** IA-V-2104A/B Bypass using **IAR08**.
4. Start SA-P-1A in **HAND** using **IAR03**.
5. **CLOSE** IA/SA Cross-connect Valves using **IAR10**.
6. Red tag IA-P-4 extension control on PLF in pull-to-lock.

B. EVENT TRIGGERS

#3 FWFDFWP(1)<416
Command: IMF FW06B 0 15

#5 FWVFWV5A<0.95
Command: IMF FW13A

C. MALFUNCTIONS

IA01C	IA-P-4 trip; insert immediately.
MU14	Makeup line leak; insert at 50% severity (50 gpm) on Event #2.
EG03	Main generator trip; insert on Event #4.
MS03A	MSLB outside RB; insert at 100% severity with 300 second ramp on Event #4.
MS10,SGA,TRN B	HSPS SG-A Train-B failure; insert immediately.

D. REMOTE FUNCTIONS

Per 4.A. above.

E. OVERRIDES

02A3M06-ZAOMU24FI FLO; insert at 0% severity with 120 second delay on Event #2.

03A4S35-ZDIPBCMUV16C ON CR MU-V-16C CLOSE PUSHBUT; insert OFF immediately.

F. MONITOR

Set MSK2609A = 14.7 immediately (auxiliary steam pressure).

NRC RO OPERATIONAL
SIMULATOR SCENARIO No. 3

5.0 SCENARIO PREVIEW

A. EXAMINER PREVIEW

Plant at 100% power, MOC, with IA-P-4 out of service. IA and SA systems are aligned for service per 1104-25 as required by the On-Line Maintenance Risk document..

1. The RO will place MU-P-1A in service and secure MU-P-1B per 1104-2.
2. A makeup system leak occurs downstream of MU-V-17 and the low range makeup flow transmitter (MU-FT-24A) fails low. The RO must isolate the normal makeup line to isolate the leak, and HPI must be used to control RCS inventory. **(CT)**
   One hour time compression will be used, and plant management will order a plant shutdown. The plant shutdown will be performed per 1102-10.
3. As FW-P-1A is removed from service per 1102-10 and 1106-3 by the BOP operator, the selected B-train main feedwater valve d/p transmitter fails low causing SASS mismatch but no actuation. The BOP operator must assume hand control of FW-P-1B and select the alternate main feedwater valve d/p transmitter per H-3-2.
4. At 35-40% reactor power, the main generator and turbine trips without reactor trip, causing a main steam line rupture on A-SG in intermediate building. The reactor will eventually trip automatically if not tripped manually per 1203-24. BOP and RO operators must respond to the reactor trip per 1210-1. The RO must start MU-P-1C and use HPI to maintain pressurizer level per 1210-1.
5. Component and safety system failures on the feedwater system will require the BOP operator to manually isolate main and emergency feedwater to the A-SG per 1210-3. **(CT)** The BOP operator must then control B-SG feeding and steaming to control RCS temperatures and minimize reheat per 1210-3.
6. When the RCS excessive cooling is terminated, the RO must control (terminate) HPI to control RCS inventory and pressure per 1210-3. However, MU-V-16C will not close on demand from control room, requiring RO to secure MU-P-1C to secure B-train HPI. **(CT)**
7. The crew will perform all follow-up actions of 1210-3 and transition back to 1210-1.

NRC RO OPERATIONAL
SIMULATOR SCENARIO No. 3

B. SHIFT BRIEFING

1. Plant is at 100% power, steady-state, 300 EFPD.

2. IA-P-4 is out of service for inspection, maintenance, and cleaning. The compressor is currently disassembled, and maintenance is awaiting arrival of vendor representative to perform further inspection and cleaning. (See On-Line Maintenance Risk document)

3. The Instrument and Service Air systems are aligned for service per 1104-25, while IA-P-4 is out of service, per the On-Line Maintenance Risk document.

4. Maintenance and Engineering must perform an inspection of MU-P-1B lube oil system while it is shutdown. A switching order is being prepared. Expected duration of the inspection will be 1-2 hours, after which MU-P-1B will be returned to service.

5. DCCW loop-A will be sampled while in service for MU-P-1A operation.

6. Orders for this shift include shifting from MU-P-1B to MU-P-1A in operation, and maintaining 100% power operation.

NRC RO OPERATIONAL
SIMULATOR SCENARIO No. 3

6.0 SEQUENCE OF EVENTS

Examiner Notes and Actions	Expected Operator Actions
♦ **ICO**: Initialize the simulator per Section 4.0.	
♦ **IPOI**: Assign team positions and conduct the SHIFT BRIEFING per Section 5.B.	♦ Assume assigned team positions.
♦ Allow crew 3-5 minutes to take turnover and assume the watch.	♦ Take turnover and review plant status. ♦ Assume the watch and inform examiner.
1. **SHIFT FOREMAN**: Direct primary CRO actions per 1104-2 to place MU-P-1A in service for less than 4 hour run, and secure MU-P-1B.	
	1.1 RO - Starts DC-P-1A, DR-P-1A, and MU-P-1A using their extension controls on CC.
	1.2 RO - Monitors makeup and RCP seal injection parameters on CC to ensure stability.
	1.3 RO - Secures MU-P-1B using its extension control on CR.
SHIFT FOREMAN: Direct RO to start IC-P-1B and secure IC-P-1A per the On-line Maintenance Risk document for MU-P-1B.	
	1.4 RO - Starts IC-P-1B using its extension control on CR, and secures IC-P-1A using its extension control on CR.

NRC RO OPERATIONAL
SIMULATOR SCENARIO No. 3

Examiner Notes and Actions	Expected Operator Actions
2. **ICO**: Approximately one (1) minute after IC-P-1A is secured, or when directed by Examiner, activate EVENT #2 to cause makeup line leak and 120 seconds later, MU-FT-24A fails low.	
	2.1 RO - Diagnose symptoms of primary system leak in Auxiliary Building by the following alarms and indications: ♦ Pressurizer level decrease (CC) with MU-V-17 controller demand increase (CC) ♦ Makeup flow increase on MU-FI-24A and 24B (CC) and eventually D-3-1 alarm ♦ Makeup tank level and pressure decrease and eventually alarms D-3-2 & D-3-3 ♦ Auxiliary Building sump level increase (LWDS recorder) and eventually LWDS-1-1 alarm
SHIFT FOREMAN: Implement alarm response procedures as they occur or as requested by RO.	
	2.2 BOP/RO - Dispatch personnel to Auxiliary Building to search for leaks.
	2.3 RO - Closes MU-V-3 by depressing its CLOSE pushbutton on CC to isolate letdown and conserve RCS inventory per D-3-1.
	2.4 RO - Recognize failure of MU-FT-24A by its indication on CC meter dropping to zero (0), with flow still indicated on MU-FI-24B.
ICO-ROLE PLAY: As auxiliary operator looking for leak in auxiliary building, report a bad leak in overhead of 281' elevation just outside makeup valve alley.	

NRC RO OPERATIONAL
SIMULATOR SCENARIO No. 3

Examiner Notes and Actions		Expected Operator Actions
SHIFT FOREMAN: If RO inquires as to which RC Bleed Tank to use for feed to makeup system, direct RO to use B-RCBT.		
	2.5	RO - Operates the following LWDS and makeup system controls to initiate feed to makeup tank per D-3-2: ♦ Selects B-RCBT using FEED TANK SELECT switch on LWDS ♦ Selects a waste transfer pump using FEED PUMP SELECT switch on LWDS ♦ Operates makeup batch controller and MU-V-10 on CC to enable a batch feed ♦ Starts selected waste transfer pump on LWDS to initiate batch feed to makeup tank ♦ Operates makeup batch controller as necessary to maintain makeup tank level and pressure within limits of 1104-2, Figure 1
SHIFT FOREMAN: Based upon report from field, direct the primary CRO to isolate makeup to the RCS - more specifically, close MU-V-17 and MU-V-18.		
NOTE: 2.6 is a Critical Task.	2.6	**RO - Closes MU-V-17 by transferring its controller (CC) to HAND and decreasing the demand to zero (0), and closes MU-V-18 by depressing its CLOSE pushbutton on CC.**
ICO-ROLE PLAY: Monitor the makeup system mimic on the Instructor Station, and when MU-V-17 and MU-V-217 both indicated closed, report to control room that the leak outside makeup valve alley has stopped.		

NRC RO OPERATIONAL
SIMULATOR SCENARIO No. 3

Examiner Notes and Actions		Expected Operator Actions
	2.7	RO - Operates MU-V-16A or MU-V-16B using their OPEN, CLOSE, and STOP pushbuttons on CC, as needed to restore and maintain pressurizer level.
EXAMINER: After pressurizer level and makeup tank level are under control and stable with the makeup leak isolated, inform crew that after one (1) hour of time compression, plant management has ordered a plant shutdown to repair the leak.		
SHIFT FOREMAN: Implement 1102-10 and direct **primary CRO** to commence plant shutdown at 5% per minute.		
	2.8	RO - Commences plant shutdown by: ♦ Setting ULD rate of change at 50% (CC) ♦ Lowering ULD setting to reduce power (CC)
SHIFT FOREMAN: Direct CRO actions for plant shutdown per 1102-10.		
	2.9	BOP/RO - Monitor critical parameters during plant shutdown.
	2.10	BOP - Secures moisture separator drain pumps (MO-P-1A-F) using their extension controls on CL, when directed by Shift Foreman.
SHIFT FOREMAN: Direct primary CRO to stop power reduction at approximately 40%, to secure FW-P-1A and HD-P-1C.		
	2.11	RO - Operates ULD (CC) as necessary to stop plant power reduction at approximately 40% as directed by Shift Foreman.

NRC RO OPERATIONAL
SIMULATOR SCENARIO No. 3

Examiner Notes and Actions	Expected Operator Actions
3. **SHIFT FOREMAN**: When the plant has stabilized at approximately 40% power, direct the secondary CRO to secure **FW-P-1A**.	3.1 BOP - Performs actions to secure FW-P-1A per 1106-3 as follows: (all on CL) ♦ Transfers FW-P-1A ICS station to HAND ♦ Slowly lowers FW-P-1A ICS station demand to reduce FW-P-1A speed and flow ♦ Monitors FW-P-1B speed and flow to ensure proper automatic response to decreasing FW-P-1A speed and flow
ICO: Verify EVENT #3 activates to fail SP11B-DPT2 low over 15 seconds, as FW-P-1A speed is reduced.	
	3.2 BOP - Diagnoses decreasing (failed) B-train MFW valve d/p as follows: ♦ Indication on SP11B-DPT2 (CC) drops to 0 ♦ SASS Mismatch alarm H-3-2 ♦ SASS Mismatch red lamps illuminated on SP11B-DPT1 and DPT2 ♦ Low MFW valve d/p alarm M-1-5 ♦ Increase in FW-P-1B speed and flow due to automatic ICS controller response to low MFW valve d/p
	3.3 RO - Monitors RCS critical parameters and responds to the slight overcooling effects of the FW-P-1B transient: ♦ Operates MU-V-16A/B (CC) as necessary to maintain pressurizer level ♦ Verifies proper automatic response of pressurizer heaters and spray valve (RC-V-1) to decreasing RCS pressure

NRC RO OPERATIONAL
SIMULATOR SCENARIO No. 3

Examiner Notes and Actions		Expected Operator Actions
	3.4	BOP - Responds to failed MFW valve d/p instrument per H-3-2 as follows: (on CC) ◆ Transfers FW-P-1B ICS station to HAND ◆ Adjusts FW-P-1B ICS station demand as necessary to stabilize MFW flows ◆ Selects alternate B-train MFW valve d/p transmitter, SP11B-DPT1, by depressing its SASS selector pushbutton
SHIFT FOREMAN: After secondary CRO has diagnosed MFW valve d/p instrument failure and initiated corrective action to control FW-P-1B, implement H-3-2 alarm response and verify or direct actions as necessary.		
	3.5	BOP - Performs or verifies actions per H-3-2 as directed by the Shift Foreman.
	3.6	BOP - Following selection of SP11B-DPT1, may transfer FW-P-1B back to auto at 35 psid on lower MFW valve d/p (zero error on FW-P-1B ICS station; or, may leave FW-P-1B in HAND for remainder of plant shutdown.
SHIFT FOREMAN: Continue plant shutdown per 1102-10 by directing secondary CRO to secure HD-P-1C.		
	3.7	BOP - Secures HP-P-1C using its extension control on CL as directed by the Shift Foreman.
SHIFT FOREMAN: Continue plant shutdown by directing primary CRO to lower reactor power to approximately 25%.		
	3.8	RO - Lowers ULD setting as necessary to obtain reduction in plant power level as directed by the Shift Foreman.

NRC RO OPERATIONAL
SIMULATOR SCENARIO No. 3

Examiner Notes and Actions	Expected Operator Actions
4. ICO: When reactor power is between 35 and 40%, or when directed by Examiner, activate EVENT #4 to cause main generator-turbine trip and initiate a main steam line break on A-SG in Intermediate Building.	
	4.1 BOP/RO - Diagnose turbine trip without reactor trip by alarm K-1-1 and numerous other panel indications (no alarm G-1-1).
	4.2 BOP/RO - Respond to the turbine trip without reactor trip per K-1-1 as follows: ♦ Verify ICS goes in TRACK (alarm H-2-2) ♦ Monitor power range digitals on CC, and verify control rod insertion (CRD panel and average control rod position on CC) to automatically decrease reactor power to minimum ICS demand (15%)
	4.3 BOP - Controls FW-P-1B ICS controller if in HAND as necessary to maintain MFW valve d/p for sufficient main feedwater flow, due to initial SG pressure increase.
	4.4 RO - Monitors RCS critical parameters and responds to the RCS cooldown and shrink as reactor power decreases: ♦ Operates MU-V-16A/B (CC) as necessary to maintain pressurizer level ♦ Verifies proper automatic response of pressurizer heaters and spray valve (RC-V-1) to decreasing RCS pressure

NRC RO OPERATIONAL
SIMULATOR SCENARIO No. 3

Examiner Notes and Actions		Expected Operator Actions
	4.5	BOP - Recognizes abnormal A-SG pressure response during power reduction and after reactor trip, by the following indications: ◆ A-SG pressure lower than B-SG pressure (CC and PCL) ◆ Demand on MS-V-3D/E/F ICS controller is lower than the demand for MS-V-3A/B/C controller
NOTE: Reactor may automatically trip due to numerous failures combined with main steam line break.		
SHIFT FOREMAN: After allowing time for CROs to respond and diagnose abnormal pressure response in A-SG, or if recommended by either CRO, direct RO to manually trip reactor due to steam leak per 1203-24.		
	4.6	RO/BOP - Manually trips reactor by depressing TRIP and DSS pushbuttons on CC.
EXAMINERS: Refer to copy of 1210-1 for expected operator actions.		
	4.7	RO - Verifies reactor is tripped per 1210-1 and commences 1210-1 immediate actions.
	4.8	BOP - Verifies main turbine is tripped per 1210-1.
EXAMINER: See Step 5.2 for actions expected to mitigate FW-V-5A failure to close.	4.9	BOP - Controls main feedwater per 1210-1 by controlling FW-P-1B in HAND as necessary, and recognizes FW-V-5A has no control power.

NRC RO OPERATIONAL
SIMULATOR SCENARIO No. 3

Examiner Notes and Actions	Expected Operator Actions
	4.10 RO - Performs 1210-1 action to start a second makeup pump and maintain pressurizer level as follows: ◆ Starts MU-P-1C, DC-P-1B, and DR-P-1B using their extension controls on CR ◆ Operates MU-V-16A/B/C/D (CC/CR) as necessary to maintain pressurizer level above 80 inches (CC - recorder and digital) ◆ Opens MU-V-14A/B (CC) if makeup tank level drops below 55 inches (CC digital) ◆ If pressurizer level drops below 20 inches, manually initiates HPI by depressing 1600# or 4# ES Manual Actuation pushbuttons on CC for Train-A and on CR for Train-B
5. **ICO**: Verify EVENT #5 activates to trip FW-V-5A breaker as it starts to close on reactor trip. **SHIFT FOREMAN**: After providing secondary CRO sufficient time to initiate A-SG isolation on his/her own, if necessary direct secondary CRO to isolate A-SG per 1210-3.	5.1 BOP/RO - Diagnose A-SG blow-down causing excessive primary to secondary heat transfer by following indications: ◆ Rapid drop in A-SG pressure (CC & PCL) ◆ Decreasing RCS temperatures below normal post-trip values (CC & PCL) ◆ Decreasing RCS pressure below normal post-trip value (CC & PCL)
NOTE: 5.2 is a Critical Task.	**5.2 BOP - Performs actions necessary to isolate feedwater to A-SG per 1210-1 and 1210-3:** ◆ **Transfers FW-V-17A and 16A ICS controllers (CC) to HAND and decreases demands to zero (0)** ◆ **Closes FW-V-92A by depressing its CLOSE pushbutton on CC** ◆ **Controls or trips FW-P-1B (CL)**

NRC RO OPERATIONAL
SIMULATOR SCENARIO No. 3

Examiner Notes and Actions	Expected Operator Actions
NOTE: Emergency feedwater will automatically actuate at less than 10 inches in A-SG as it steams down with MFW isolated, and EF-V-30A/D will automatically open to control A-SG level at 25 inches on startup range.	
	5.3 **BOP - Performs actions to completely isolate A-SG per 1210-3 as follows:** ♦ Closes or verifies closed MS-V-3D/E/F and MS-V-4A with their ICS controller on CC in HAND at zero (0) demand ♦ Closes MS-V-1A and 1B by depressing their CLOSE pushbuttons on CC ♦ Closes MS-V-2A by depressing its CLOSE pushbutton on CC ♦ **Transfers EF-V-30A and EF-V-30D controllers on CL to MANUAL, and sets their demands to zero (0)** ♦ May direct AO to locally close FW-V-5A
NOTE: Closing EF-V-30A and 30D is part of the Critical Task to isolate A-SG.	
ICO-ROLE PLAY: If directed to close FW-V-5A locally, display FWVFWV5A on MONITOR and set its value to zero (0) in 0.1 increments over a one minute ramp. When FW-V-5A is closed, report task complete to the control room.	
NOTE: When A-SG blows dry and no longer removes heat from RCS, the RCS will begin to reheat and repressurize until control of B-SG and HPI is assumed by the operators to stabilize RCS temperature & pressure.	

NRC RO OPERATIONAL
SIMULATOR SCENARIO No. 3

Examiner Notes and Actions		Expected Operator Actions
	5.4	BOP - When A-SG blows dry, performs actions necessary to establish B-SG as an adequate heat sink to minimize RCS reheat as follows: ♦ Adjusts (lowers) turbine header pressure setpoint (CC) to open MS-V-3A/B/C in auto, or transfers MS-V-3A/B/C ICS controller on CC to HAND and adjusts (raises) their demand, to lower B-SG pressure such that it becomes a heat sink and stabilizes RCS T-cold ♦ Provides main or emergency feedwater to B-SG as necessary to maintain sufficient level for heat transfer (≥ 25 " startup level)
6. **SHIFT FOREMAN**: Direct operators to clear ESAS signals as necessary to gain control of high pressure injection components, and direct primary CRO to control HPI as necessary to stabilize RCS pressure with at least 40°F subcooled margin.		
NOTE: When ESAS trains A and B are clear, all 3 sets of block loading sequence blue lamps will be extinguished for each train on PCR.	6.1	RO/BOP - When directed by Shift Foreman, clear ESAS signals as necessary for HPI throttling as follows: ♦ Bypass or reset 1600# auto channels, 3 on train-A and 3 on train-B, by depressing their bypass or reset pushbuttons on CC and CR ♦ Defeat and re-enable 1600# manual channels 3 on train-A and 3 on train-B, by depressing their defeat/enable pushbuttons on CC and CR

NRC RO OPERATIONAL
SIMULATOR SCENARIO No. 3

Examiner Notes and Actions		Expected Operator Actions
NOTE: 6.2 is a Critical Task. NOTE: MU-V-16C will NOT close upon demand by its CLOSE pushbutton on CR.	6.2	**RO - Operates makeup (HPI) system valves and pumps as necessary to control HPI:** ◆ **Closes or throttles as necessary MU-V-16A, 16B, 16C, and 16D if open** ◆ **Reopens MU-V-36 and 37 on CC prior to throttling below 100 gpm on MU-P-1A or MU-P-1C** ◆ **If open, recognizes MU-V-16C failure to close as indicated by its red OPEN lamp on CR** ◆ **Secures MU-P-1C using its extension control on CR to terminate B-train HPI flow if MU-V-16C is open** ◆ Operates MU-V-16A/B as necessary to maintain stable pressurizer level
SHIFT FOREMAN: Following all immediate actions to isolate A-SG and actions necessary to stabilize the plant, announce to team and commence 1210-1 verification. When required, announce to team and transition to 1210-3.		
EXAMINERS: Refer to copy of 1210-1.	6.3	RO/BOP - Verify 1210-1 immediate actions as read by Shift Foreman, and continue to monitor plant conditions.
EXAMINERS: Refer to copy of 1210-3.	6.4	BOP - Verifies 1210-3 immediate actions as read by Shift Foreman, and continue to monitor plant conditions.
SHIFT FOREMAN: Direct crew in follow-up actions of 1210-3, then when appropriate, announce to team and transition back to 1210-1.	6.5	RO/BOP - Perform applicable follow-up actions of 1210-3 as directed by Shift Foreman.

NRC RO OPERATIONAL
SIMULATOR SCENARIO No. 3

7.0 TERMINATION POINT

When all of the following conditions exist:

1. Examinees had opportunity to perform all critical tasks as designed.
2. Crew has transitioned back to 1210-1 from 1210-3.
3. Examiners agree to terminate.

ON-LINE MAINTENANCE RISK MANAGEMENT

ON-LINE RISK # 149 **Rev : 0**

RISK EVALUATION SUMMARY - IA-P-4 System Outage

IAW AP 1070 the Instrument Air has a Risk Ranking of High (RAW of 18).

Risk Achievement Worth (RAW) is the factor increase in core damage frequency resulting when the structure, system, or component (SSC) is determined to be continuosly failed.

Assumptions:

IA-P-4 will be removed from service for fan motor replacement, vendor cleaning, and inspection of the compressor cooling system. Work is scheduled for the week of 2/14/2000.

1. LIST THE TYPE OF RISK CONCERNS EVALUATED

None provided that IA-P-1A/B, IA-Q-1 and SA-P-1A/B are placed in service and function properly.
Infrequently run equipment may not support demands.

2. LIST IMPORTANT SSCs WHICH NEED TO BE MAINTAINED OPERABLE

IA-P-1A
IA-P-1B
SA-P-1A
SA-P-1B
IA-Q-1

3. LIST IMPORTANT MANUAL ACTIONS WHICH SHALL BE BRIEFED WITH THE APPROPRIATE PERSONNEL

IA system will be supplied by IA-P-1A/B, and SA system will be supplied by SA-P-1A/B per 1104-25, Instrument and Control Air System, and 1104-42, Station Service Air, respectively.

IA-P-1A/B and SA-P-1A/B maintain the air systems at a slightly lower pressure than IA-P-4 (85# vs.100#). Monitor IA and SA system pressures more frequently while IA-P-4 is OOS.

4. IDENTIFY CONTINGENCY PLANS OR COMPENSATORY ACTIONS USED TO REDUCE RISK

COMPENSATORY ACTIONS (PRIOR TO/IN PREPARATION FOR OUTAGE):

IA-P-1A/B and SA-P-1A/B will be placed in service and made to carry plant air loads for a period of at least 4 hours prior to disabling IA-P-4 and IA-Q-2.

IA-P-4 will be removed from service in accordance with 1104-25. Maintenance work will be performed, and IA-P-4 will be returned to service per 1104-25 at the completion of scheduled work.

CONTINGENCY ACTIONS:

5. EVALUATION APPROVALS

- ○ 1. Risk found acceptable
- ● 2. Risk found acceptable with contingencies identified
- ○ 3. Risk unacceptable,

Signature of Evaluator: FOR TRAINING on 02/13/2000

Signature of Director: FOR TRAINING on 02/13/2000

CC: Job Package
Shift Supervisor Clipboard
Operations Department General Files
STA

NRC RO OPERATIONAL
SIMULATOR SCENARIO No. 4

**REACTOR STARTUP CONTINUES FROM 1E-8 AMPS,
LOSS OF 1A AUXILIARY TRANSFORMER, LOSS OF MAIN FEEDWATER,
AND OTSG TUBE RUPTURE CAUSING LOSS OF SUBCOOLED MARGIN**

DEVELOPED BY/DATE: 12-17-99

REVIEWED BY/DATE: 12/20/99

APPROVED BY/DATE: 12/20/99
(OPERATIONS TRAINING MANAGER)

NRC RO OPERATIONAL
SIMULATOR SCENARIO No. 4

SCENARIO CHANGE HISTORY PAGE

REVISION	DATE	REFERENCE TITLE	DESCRIPTION (Include AI # if appropriate)

NRC RO OPERATIONAL
SIMULATOR SCENARIO No. 4

1.0 GENERAL DESCRIPTION OF SCENARIO

Reactor at 1E-8 amps during a xenon-free plant startup at MOC.

Reactor power is increased to 5%.

NI-5 (selected) fails to come on scale.

FW-P-1A is transferred from auxiliary to main steam prior to 5% power.

At 5% power, selected B-SG startup level transmitter fails low, causing FW-V-16B to open.

1A auxiliary transformer trips causing loss trip of MU-P-1B and loss of RC makeup/seal injection.

FW-P-1A motor speed changer malfunction causes loss of main feedwater.

EF-V-30B/C do not automatically open to supply B-SG with emergency feedwater.

A tube rupture occurs on B-SG resulting in loss of required RCS subcooled margin.

RC-P-1B can not be secured by its extension control on CC.

RCS subcooled margin will be regained

RCS natural circulation must be established.

Plant cooldown is commenced per 1210-5.

Estimated scenario time - 70 minutes. **3 Critical Tasks**

2.0 REFERENCES

A. 10 CFR 55.45 Operating Tests, (a) Content (3), (4), (5), (6), (7), (8), (9), (12), (13)

B. PROCEDURES

1102-2	Plant Startup (sign-off copy required for crew)
1106-1	Turbine Generator (sign-off copy required for crew)
1106-2	Condensate System (sign-off copy required for crew)
1106-3	Feedwater System (sign-off copy required for crew)
1203-15	Loss of RC Makeup/Seal Injection
1202-38	Nuclear Services River Water Failure
1203-19	River Water System Failure (DR/SR)
1203-20	Nuclear Services Closed Cooling System Failure
1210-5	OTSG Tube Leakage
1202-12	Excessive Radiation Levels
1210-1	Reactor Trip (copies required for examiners)
1210-2	Loss of 25°F Subcooled Margin (copies required for examiners)
1210-10	Abnormal Transients Rules, Guides, and Graphs

Alarm Responses

NRC RO OPERATIONAL
SIMULATOR SCENARIO No. 4

3.0 TASKS

0010250101	Operate control rods manually at power
341C020101	Perform a plant startup
3418000101	Perform plant power changes
0000340501	Respond to a loss of power range nuclear instrument
0598040101	Shift steam supply to FW-P-1A/B between auxiliary and main steam
0158020401	Respond to a SASS mismatch/actuation
0590050101	Operate the feedwater regulating valves in manual and automatic
0008320501	Respond to loss of a 4160V bus
0000220501	Respond to a loss of reactor coolant makeup
0008210501	Respond to loss of RCP seal injection
0000540501	Respond to a loss of main feedwater
0610010401*	**Perform required actions if EFW system does not operate properly**
000C220501	Respond to OTSG tube leak
0000610501	Respond to excessive radiation levels
0000070501	Respond to a reactor trip as the primary CRO
0000080501	Respond to a reactor trip as the secondary CRO
000C190501*	**Respond to loss of 25°F subcooled margin**
0020100101	Establish natural circulation
0130040101	Bypass or defeat an ES channel
004C040101*	**Throttle high pressure injection flow**

*** Critical Task**

NRC RO OPERATIONAL
SIMULATOR SCENARIO No. 4

4.0 SIMULATOR INITIALIZATION

A. IC08 Reactor critical at 1E-8 amps, MOC, xenon-free.

Ensure MSK2609A = 214.7, then place simulation in RUN and ensure the following:

1. Main Feedwater Pump is running on auxiliary steam (AS-V-5A open)
2. Gland steam is supplied by auxiliary steam (AS-V-8 open)
3. Transfer all operating ventilation fans on H&V panel to A-train.

B. EVENT TRIGGERS

None

C. MALFUNCTIONS

NI19A	NI-5 linear amp fails low; insert immediately.
RC23A	B-SG startup level transmitter (LT-1054) failure; insert at 0% severity over 300 second ramp on EVENT #3.
ED02D	Auxiliary transformer 1A fault; insert on EVENT #4.
TH15B	B-SG tube leak; insert at 20% severity over 100 second ramp on EVENT #6.

D. REMOTE FUNCTIONS

ICR03	EF-V-30B/C startup level setpoint; insert value of zero (0) immediately.

E. OVERRIDES

01A5S07-ZDIMSCA(3) SLOLO FW-P-1A MSC SWITCH; insert ON on EVENT #5.

02A3S16-ZDICSRCP1B(1) PTL RC-P-1B CS; insert OFF immediately.

02A3S16-ZDICSRCP1B(2) STP RC-P-1B CS; insert OFF immediately.

F. MONITOR

Set MSK2609A = 214.7 immediately (auxiliary steam pressure).

NRC RO OPERATIONAL
SIMULATOR SCENARIO No. 4

5.0 SCENARIO PREVIEW

A. EXAMINER PREVIEW

Reactor critical at 1E-8 amps during a xenon-free plant startup at MOC. Startup to continue.

1. Primary CRO will operate control rods to increase reactor power to 5% per 1102-2. NI-5 will not come on scale as power is increased into power range, requiring NI-6 to be selected for ICS control per H-3-2 prior to transfer of Diamond to auto per 1102-2.
2. Prior to reaching 5% reactor power per 1102-2, the secondary CRO will transfer FW-P-1A turbine steam supply from auxiliary to main steam per 1106-3.
3. Selected B-SG startup level transmitter (LT-1054) fails low (0") over 300 seconds, causing FW-V-16B to open in auto and eventually a SASS mismatch alarm. The secondary CRO must respond to the SASS mismatch per H-3-2, by assuming hand control of FW-V-16B, selecting a good level transmitter, then transferring FW-V-16B back to auto.
4. A failed fault pressure switch trips 1A auxiliary transformer and 230KV bus #8, causing fast transfer of BOP buses, under-voltage on 1E 4160V ES bus, and trip of numerous components including MU-P-1B. The primary CRO must respond to the loss of RC makeup and RCP seal injection per 1203-15. Both CROs must respond to other component trips per the appropriate procedure.
5. An electrical short in the motor speed changer for FW-P-1A will cause it to run off line, resulting in a loss of main feedwater. When EFW actuates, EF-V-30B/C will not automatically open and control level in B-SG. The secondary CRO must manually initiate and control EFW flow to B-SG to provide adequate heat transfer. **(CT)**
6. A multiple tube failure occurs in B-SG, resulting in a loss of 25°F subcooled margin. The primary CRO must secure reactor coolant pumps per 1210-1/1210-2, but RC-P-1B extension control will not function. The primary CRO must de-energize 1B 6900V bus to secure RC-P-1B. **(CT)**
7. Eventually RCS subcooled margin will be regained, requiring the primary CRO to throttle HPI per 1210-10. **(CT)**

   The secondary CRO will establish RCS natural circulation core cooling, and a plant cooldown per 1210-5 will be commenced.

NRC RO OPERATIONAL
SIMULATOR SCENARIO No. 4

B. SHIFT BRIEFING

1. Reactor is critical at 1E-8 amps during a xenon-free startup at 300 EFPD.

2. Critical data has been obtained and 1103-8, Approach to Criticality, is complete.

3. The plant tripped 80 hours ago due to a main generator relay failure.

4. FW-P-1A and gland steam are currently supplied by the auxiliary steam system.

5. B-RCBT is on sample recirculation at this time.

5. Continue plant startup by increasing power reactor power per 1102-2.

NRC RO OPERATIONAL
SIMULATOR SCENARIO No. 4

6.0 SEQUENCE OF EVENTS

Examiner Notes and Actions	Expected Operator Actions
♦ **ICO**: Initialize the simulator per Section 4.0.	
♦ **IPOI**: Assign team positions and conduct the SHIFT BRIEFING per Section 5.B.	♦ Assume assigned team positions.
♦ Provide Shift Foreman with sign-off copies of 1102-2, 1106-1, 1106-2, and 1106-3.	♦ Take turnover and review plant status.
♦ Allow crew 3-5 minutes to take turnover and assume the watch.	♦ Assume the watch and inform examiner.
1. **SHIFT FOREMAN**: Direct primary CRO to increase reactor power to 5% per 1102-2. Remind primary CRO that power ramp limit is 30%/hour per 1102-2, Enclosure 4.	
	1.1 RO – Operates CRD panel (CC) to withdraw control rods and increase reactor power while: ♦ Monitoring power level and startup rate on NI-3 and NI-4 (intermediate range) (CC) ♦ Monitoring RCS critical parameters ♦ Complying with MMRs (<30%/hour)
NOTE: Point of adding heat occurs between 1E-7 and 1E-6 amps on NI-3 and NI-4.	
	1.2 RO – Recognizes and announces when point of adding heat is reached as indicated by: ♦ Decrease in startup rate on NI-3/4 (CC) ♦ Increase in RCS temperatures (CC & PCL) ♦ Increase in pressurizer and makeup tank levels (CC) ♦ Decrease in RCS makeup flowrate (CC)

NRC RO OPERATIONAL
SIMULATOR SCENARIO No. 4

Examiner Notes and Actions		Expected Operator Actions
	1.3	BOP – Monitors secondary critical parameters as reactor power is increased, and: ◆ Verifies automatic response of MS-V-3s to control SG pressures at 895 psig (CC) ◆ Verifies automatic response of FW-V-16s to control SG levels at 25" (CC) ◆ Operates FW-P-1A ICS station demand to maintain ≥ 35 psid MFW valve d/p (CL)
SHIFT FOREMAN: Direct primary CRO to maintain pressurizer level within Figure 1 of 1102-2, bleeding to C-RCBT as necessary. Provide 1102-2, Figure 1 to primary CRO.		
	1.4	RO – Operates the following makeup and LWDS system components as necessary to maintain pressurizer level increase within Figure 1 as T-ave increases, and to maintain makeup tank level within Figure 1 of 1104-2: ◆ MU-V-17 ICS station setpoint (CC) ◆ Bleed Tank Select switch on LWDS ◆ MU-V-8 (THRU/BLEED) pushbuttons (CC) ◆ MU-V-5 demand setpoint (CC)
NOTE: NI-5 will NOT come on scale when reactor power increases into power range.		
	1.5	RO - Recognizes and reports failure of NI-5 to come on scale as indicated by comparison to NI-6, 7, and 8.
SHIFT FOREMAN: When primary CRO identifies and reports NI-5 problem, inform CRO that you will evaluate Tech. Specs. Then, after reading Tech. Spec. requirement for NI operability, direct primary CRO to select NI-6 for control and continue power escalation.		

NRC RO OPERATIONAL
SIMULATOR SCENARIO No. 4

Examiner Notes and Actions	Expected Operator Actions
NOTE: As reactor power is increased to 5%, a SASS mismatch will eventually occur (H-3-2) on the NI channel.	
	1.6 RO - Selects NI-6 for ICS control by depressing its SASS select pushbutton on CC, prior to transferring Diamond panel to auto per H-3-2.
SHIFT FOREMAN: Direct secondary CRO to place A-RPS channel in Manual Bypass due to NI-5 failure. Direct third CRO to make a log entry for the RPS channel to manual bypass.	
	1.7 BOP - Places A-RPS in manual bypass: ♦ Obtains RPS manual bypass key from controlled key locker ♦ Opens left door on A-RPS cabinet ♦ Inserts manual bypass key into reactor trip module and turns key 90° clockwise
	1.8 RO - Operates control rods to continue reactor power increase towards 5% on NI-6, 7, 8.
2. **SHIFT FOREMAN**: As reactor power is increased but prior to 5%, direct secondary CRO to transfer FW-P-1A steam supply from auxiliary to main steam per 1106-3.	
	2.1 BOP – Transfers FW-P-1A steam supply per 1106-3 as follows: ♦ Directs auxiliary operator to slowly close AS-V-5A in plant ♦ Monitors MFW valve d/p (CL) and FW-P-1A control valve positions (PLF) ♦ Controls FW-P-1A ICS station demand as necessary to maintain MFW valve d/p greater than 70 psid per 1106-3

NRC RO OPERATIONAL
SIMULATOR SCENARIO No. 4

Examiner Notes and Actions	Expected Operator Actions
3. **ICO**: When reactor power is approximately 5%, or when directed by Examiner, activate EVENT #3 to cause selected B-SG startup level instrument (LT-1054) to fail low (0") over 300 seconds.	
	3.1 BOP – Recognizes increase in B-SG feed flow (CC) and real startup level on digital (CC).
	3.2 BOP – Recognizes increase in demand on FW-V-16B ICS station and valve position (CC).
NOTE: Eventually a SASS mismatch (H-3-2) will occur on the B-SG startup level channel.	
	3.3 BOP – Transfers FW-V-16B ICS station (CC) to HAND, and controls demand as necessary to control B-SG feed flow and return startup level to 25" on CC digital.
SHIFT FOREMAN: Implement H-3-2 after secondary CRO performs initial manual actions, and verify/direct the actions therein.	
	3.4 RO – Responds to the MFW flow transient effects on RCS temperature, pressure, inventory, and reactor power. ◆ Verifies automatic response of MU-V-17 ◆ Verifies automatic response or RC-V-1 (pressurizer spray on CC) ◆ Verifies automatic response of PZR heaters on CR
	3.5 BOP – Selects alternate B-SG startup level instrument per H-3-2, by depressing its SASS pushbutton on CC.
	3.6 BOP – Obtains zero (0) error and transfers FW-V-16B ICS station back to auto.

NRC RO OPERATIONAL
SIMULATOR SCENARIO No. 4

Examiner Notes and Actions		Expected Operator Actions
SHIFT FOREMAN: Direct secondary CRO in follow-up actions for SASS Mismatch per H-3-2.		
	3.7	BOP – Performs follow-up actions of H-3-2 as directed by the Shift Foreman.
4. **ICO**: After FW-V-16B is back in automatic, or when directed by Examiner, activate EVENT #4 to cause 230KV bus-8 trip, fast transfer of BOP buses, under-voltage on 1E 4160V bus, and trip of numerous B-train components including: MU-P-1B, NS-P-1C, NR-P-1C, & SR-P-1B.		
	4.1	BOP/RO – Diagnose loss of 230KV bus-8 and 1E 4160V bus under-voltage by the following: ♦ Alarms B-1-1, B-2-1, NN-1-1, & others ♦ One set of control room overhead lights goes off for 10 seconds ♦ Numerous component trips
	4.2	BOP/RO – Recognize by panel indications and overhead lights re-energizing that EG-Y-1B has re-energized the 1E 4160V bus.
	4.3	RO - Diagnoses MU-P-1B trip by alarms and panel indications, and responds to the loss of RC makeup and seal injection per 1203-15: ♦ Transfer MU-V-32 (seal injection flow control valve) control station on CC to HAND, and reduce its demand to zero to close MU-V-32 ♦ Start MU-P-1A, DC-P-1A, and DR-P-1A using their extension controls on CC ♦ Reopen MU-V-32 by raising its controller demand to re-establish RCP seal injection flow on MU42-FI (CC)

NRC RO OPERATIONAL
SIMULATOR SCENARIO No. 4

Examiner Notes and Actions		Expected Operator Actions
	4.4	RO - Obtains 38 gpm seal injection flow on MU42-FI, checks MU-V-32 control station error at zero, and transfers MU-V-32 control station back to AUTO.
	4.5	BOP - Recognizes trip of SR-P-1B by its breaker status lamps above its extension control on CL (green and amber lamps), and verifies or starts SR-P-1B or 1C per 1203-19.
	4.6	RO - Recognizes trip of NR-P-1C and NS-P-1C by their breaker status lamps above their extension controls on CR (green and amber lamps), and verifies start of NR-P-1B (CR) per 1202-38, and verifies start of NS-P-1B (CC) per 1203-21.
SHIFT FOREMAN: After sufficient time for the CROs to have performed immediate actions of 1203-15, 1202-38, 1203-19, and 1203-20, implement each procedure and verify or direct the actions.		
	4.7	BOP/RO - Perform verification of applicable emergency and abnormal procedures as read by Shift Foreman.
	4.8	BOP/RO - Perform follow-up actions of applicable emergency and abnormal procedures as directed by the Shift Foreman.
SHIFT FOREMAN: Implement appropriate alarm response procedures and direct CRO actions.	4.9	BOP/RO - Perform actions of alarm responses as directed by Shift Foreman.

NRC RO OPERATIONAL
SIMULATOR SCENARIO No. 4

Examiner Notes and Actions	Expected Operator Actions
5. **ICO**: After all emergency and abnormal procedure actions have been verified for loss of 230KV bus-8, or when directed by Examiner, activate EVENT #5 to cause FW-P-1A motor speed changer short and loss of main feedwater.	
	5.1 BOP - Diagnose FW-P-1A problem and loss of main feedwater by the following: ♦ Low MFW valve d/p alarm M-1-5 ♦ Decreasing speed and discharge pressure on FW-P-1A (CL) ♦ Low SG levels and alarms J-2-3 & J-2-4 ♦ No MFW flow to SG's indicated on CC
	5.2 RO - Responds to the reduced RCS heat removal as follows: ♦ Monitors increase in RCS temperature and pressure (CC and PCL) ♦ Verifies automatic response of pressurizer spray valve, RC-V-1, to open (CC) ♦ Transfers RC-V-1 to MAN using its mode selector switch on CC, and fully opens RC-V-1 using its OPEN pushbutton on CC per G-3-8 ♦ Transfers RC-V-1 back to AUTO using its mode selector switch on CC
NOTE: Unless FW-P-1A is manually tripped, EFW will only actuate on low-low OTSG levels (10"). But, EF-V-30B and 30C will not open automatically to provide EFW flow to B-SG.	

NRC RO OPERATIONAL
SIMULATOR SCENARIO No. 4

Examiner Notes and Actions		Expected Operator Actions
	5.3	BOP - Responds to EFW actuation per 1210-10 as follows: ♦ Verifies EF-P-2A, 2B and EF-P-1 start by indications of breaker status lamps above EF-P-2A/2B extension controls (CL & CC), and EF-P-1 speed indication on CC ♦ Verifies EF-P-2A, 2B, and EF-P-1 discharge pressures (CC) are greater than SG pressures (CC & PCL) ♦ Verifies EF-V-30A/D and EF-V-30B/C open as required to provide EFW flow to both steam generators (CL & CC)
NOTE: Step 5.4 is a Critical Task.	**5.4**	**BOP - Diagnoses no EFW flow to B-SG (CC) and responds per 1210-10:** ♦ **Transfers EF-V-30B or EF-V-30C controller to manual (CC)** ♦ **Increases EF-V-30B or 30C controller demand to open at least one valve and supply EFW flow to B-SG**
SHIFT FOREMAN: If reactor is not manually tripped by CROs, or when either CRO recommends a manual reactor trip, direct the primary CRO to manually trip the reactor.		
	5.5	RO - Manually trips reactor by depressing TRIP and DSS pushbuttons on CC, and commences 1210-1 immediate actions.
EXAMINERS: Refer to copy of 1210-1.		
	5.6	BOP - Commences 1210-1 immediate actions for the reactor trip.

NRC RO OPERATIONAL
SIMULATOR SCENARIO No. 4

Examiner Notes and Actions

6. ICO: After reactor is tripped or when directed by examiner, activate EVENT #6 to initiate a large tube rupture in B-SG which will eventually result in loss of required subcooled margin.

NOTE: 1210-5 allows A-SG to be preferentially fed for loss of subcooled margin as long as HPI exists and the affected B-SG level is rising due to the tube rupture.

Expected Operator Actions

6.1 RO/BOP - Diagnose large RCS leak in B-SG by the following indications:

- Radiation monitor alarms (C-1-1) on RM-A-5/15/5G-Hi, and RM-G-27 (PRF)
- Rapid loss of pressurizer level (CC) and drop in RCS pressure (CC & PCL)
- High makeup flowrate (CC) & D-3-1
- Increase in B-SG level (CC)

6.2 RO - Performs actions in response to low pressurizer level per 1210-1 as follows, or verifies automatic 1600# ESAS actuation:

- Opens MU-V-217, MU-V-16A/16B using their OPEN pushbuttons on CC
- Starts MU-P-1C, DC-P-1B, and DR-P-1B using their extension controls on CR
- Opens MU-V-16C/16D using their OPEN pushbuttons on CR
- Manually initiates full HPI by depressing 1600# or 4# Manual ES pushbuttons on CC for Train-A and on CR for Train-B, if pressurizer level drops below 20 inches.

6.3 BOP - Operates EF-V-30B/C controllers (CC) as necessary to terminate EFW flow to B-SG as its level increases due to tube rupture (CC).

NRC RO OPERATIONAL
SIMULATOR SCENARIO No. 4

Examiner Notes and Actions		Expected Operator Actions
NOTE: Step 6.4 is a Critical Task.	6.4	**RO - Diagnoses loss of 25°F subcooled margin by alarm G-1-8 and PCL meters, and responds per 1210-2:** ♦ **Secures RC-P-1A, 1B, 1C, and 1D using their extension controls on CC** ♦ **Recognizes failure of RC-P-1B to trip by its extension control, and de-energizes 1B 6900V bus by opening breaker 1SB-02 using its extension control on PR** ♦ **Verifies or manually initiates full HPI as indicated on MU-FI-1126 & 1127 (CC) and MU-FI 1128 & 1129 (CR)**
	6.5	BOP - Responds to loss of subcooled margin per 1210-2: ♦ Verifies EF-V-30A or 30D responds in auto to provide EFW flow to A-SG to raise its level towards 75-85%, or ♦ Manually controls EF-V-30A or 30D to provide EFW flow to A-SG and raise its level to 75-85%
SHIFT FOREMAN: After 1210-1 and 1210-2 immediate actions have been performed by CROs, verify 1210-1 and 1210-2 immediate actions, then commence and direct 1210-2 follow-up actions.		
	6.6	RO/BOP - Verify 1210-1 and 1210-2 immediate actions as led by Shift Foreman.
EXAMINERS: Refer to copy of 1210-2 for follow-up actions.		

NRC RO OPERATIONAL
SIMULATOR SCENARIO No. 4

Examiner Notes and Actions	Expected Operator Actions
	6.7 RO - Operates valve controls (CC) as directed by Shift Foreman to isolate possible sources of leakage per 1210-2 follow-up step 2.2.
SHIFT FOREMAN: If secondary CRO is still feeding B-SG with EFW, direct the CRO to stop feeding B-SG as long as its level is rising due to the tube rupture.	
	6.8 BOP - Preferentially feeds A-SG with EFW as B-SG level rises due to tube rupture, and as long as HPI flow exists, per 1210-2; and stops feeding B-SG with EFW by closing EF-V-30B/C.
SHIFT FOREMAN: Announce and transition from 1210-2 follow-up actions to 1210-5 at the appropriate point.	
	6.9 RO/BOP - Perform 1210-5 follow-up actions as directed by the Shift Foreman.
	6.10 BOP - Per 1210-5: Operates MS-V-3 ICS controllers (CC) as necessary to steam both OTSG's to reduce incore temperatures below 540°F, and to maintain B-SG level ≤ 85% on the operating range (CC).
	6.11 BOP - Secures EF-P-1 when directed by Shift Foreman per 1210-5 as follows: ♦ Defeats any active HSPS-EFW actuation signals using ENABLE/DEFEAT switches for Train-A on CL and for Train-B on CC ♦ Closes MS-V-13A and 13B by depressing their CLOSE pushbuttons on CC

NRC RO OPERATIONAL
SIMULATOR SCENARIO No. 4

Examiner Notes and Actions	Expected Operator Actions
NOTE: As RCS pressure decreases toward B-SG pressure, the tube leakrate will decrease and RCS subcooled margin will be regained.	
SHIFT FOREMAN: When at least 25°F subcooled margin has been regained, direct CROs to clear ESAS signals for throttling HPI.	
	6.12 RO/BOP - When directed by Shift Foreman, clear ESAS signals for HPI throttling as follows (assuming only 1600# auto and manual ES actuation signals are present): ♦ Bypass 1600# auto channels, 3 on train-A and 3 on train-B, by depressing their bypass pushbuttons on CC and CR ♦ Defeat and reset 1600# manual channels, 3 on train-A and 3 on train-B, by depressing their defeat/enable pushbuttons on CC and CR
NOTE: When ESAS trains A and B are clear, all 3 sets of block loading sequence blue lamps will be extinguished for each train on PCR.	
SHIFT FOREMAN: Direct primary CRO to throttle HPI and control RCS subcooled margin between 30°F and 70°F, to comply with 1210-10 PTS Guideline.	

NRC RO OPERATIONAL
SIMULATOR SCENARIO No. 4

Examiner Notes and Actions		Expected Operator Actions
NOTE: Step 6.13 is a Critical Task.	6.13	**RO - When directed by Shift Foreman, throttles HPI for PTS concerns per 1210-10 as follows:** ♦ **Verifies that at least 25°F subcooled margin has been regained as indicated by PPC point C4006** ♦ **Operates MU-V-16A, 16B, 16C, and 16D using their pushbuttons on CC and CR as necessary to control HPI flows** ♦ **Reopens MU-V-36 and MU-V-37 using their pushbuttons on CC prior to throttling below 100 gpm/HPI pump as indicated on MU-FI-1126 and 1127 on CC for MU-P-1A, and MU-FI-1128 and 1129 on CR for MU-P-1C**
SHIFT FOREMAN: Direct CROs to stabilize RCS pressure and control incore temperatures, and prepare to commence plant cooldown per 1210-5.		
	6.14	BOP - Performs actions necessary to obtain RCS natural circulation via A-SG and control incore temperatures if possible: ♦ Operates EF-V-30A or 30D controller (CL) to continue A-SG level increase toward required level setpoint (50% if at least 25°F subcooled margin is regained) ♦ Operates MS-V-3 ICS controllers (CC) to steam both steam generators enough to maintain then as heat sinks relative to RCS temperatures
	6.15	RO - Throttles HPI as necessary to stabilize RCS pressure with 30-70°F subcooled margin.

NRC RO OPERATIONAL
SIMULATOR SCENARIO No. 4

7.0 TERMINATION POINT

When all of the following conditions exist:

1. Examinees had opportunity to perform all critical tasks as designed.
2. RCS pressure and core temperatures are under control.
3. Crew is preparing to commence plant cooldown per 1210-5.
4. Examiners agree to terminate.

Test Item 2.

Accept answers 'B' and 'C' as correct answers based on the following information.

Q:
Plant conditions:
- Reactor power is 100%
- PPC Point A0961, RC-P-1A UPPER OIL POT LOW alarm actuates

From the list below, identify the ONE (1) condition that would require the operator to secure RC-P-1A as conditions continue to degrade.

A. RCP Backstop Oil Flow Alarm actuates.

B. Motor Thrust Bearing temperature = 192 degrees F.

C. Motor Radial Bearing temperature = 188 degrees F.

D. Motor Stator temperature = 140 degrees C (284 degrees F).

The answer key identified C as the correct answer based on section 5.2.B.2 of 1203-16, Reactor Coolant Pump and Motor Malfunction. The section states that "If high motor bearing temps (Radial > 185°, thrust > 195°F) **are being approached**, reduce power to 50 - 75 Percent and tripped the affected pump". Response C, "Motor Radial Bearing temperature = 188 degrees F" exceeds this criteria and warrants tripping the RCP. Therefore, 'C' is a correct response.

Response 'B', "Motor Thrust Bearing temperature = 192 degrees F", also meets the criteria for reducing power and tripping the RCP. The stem requires that the examinee identify " ONE (1) condition that would require the operator to secure RC-P-1A **as conditions continue to degrade**". In this case, distracter 'B' also falls well within the guidance provided in 1203-16 that require tripping the pump as conditions continue to degrade.

Distracter A is an alarm on the PPC and does not provide operational guidance.

Distracter D is a component cooled by NSCW, and is not affected by the loss of lube oil. In addition, the guidance for tripping the RCP for high Motor Stator Temperature, section 2.2.B.1.a, requires that the temperature actually exceed 150C prior to taking action.

2/14/00

CONTROLLED COPY

GPU NUCLEAR	TMI Abnormal Procedure	Number 1203-16
Title: **Reactor Coolant Pump and Motor Malfunction**		Revision No. 40
Applicability/Scope: TMI Division	Responsible Office: Plant Operations Dir.	Effective Date: 10/12/99

This document is within QA plan scope	X	Yes		No
Safety Reviews Required	X	Yes		No

TRAINING DEPT.

List of Effective Pages

Page	Revision	Page	Revision	Page	Revision	Page	Revision
1	40						
2	40						
3	40						
4	40						
5	40						
6	40						
7	40						
8	40						

	Signature	Date
Originator	R S Campbell FOR F. KALINKO	10-12-99
Procedure Owner	R S Campbell	10-12-99
PRG	John S. Fehrer	10/12/99
Approver	James Neelis	10/12/99

NOTE

If ATP 1210-8 Superheat requires operation of a RCP, the instruction in 1210-8 supercedes the requirements in this procedure.

1.0 SEAL FAILURE

1.1 Symptoms

a. RCP Labyrinth Seal D/P Lo Alarm < 10" for RCP-1A, 1B, 1D only (F-1-6).

b. RCP Seal No. 1 Leakoff Flow Hi/Lo Alarm Hi > 5 gpm*; Lo < 0.86 gpm (F-1-3).

*or as set IAW 1101-2, Plant Setpoints

NOTE

If No. 1 seal leakoff has gradually increased over a period of time, a No. 1 seal leakoff of greater than 8 gpm may not be indicative of seal damage. In these circumstances, Plant Engineering should be consulted. Continued pump operation with No. 1 seal leakoff greater than 8 gpm (but within measurable range) may be authorized. Refer to follow-up actions for additional guidance.

c. RCP Seal No. 1 Inlet Water Temperature Hi Computer Alarm Pts. A0525, A0526, A0527, A0528.

d. High Stand Pipe Level Computer Alarm Pts. L2755, L2757, L2759, L2127.

e. Excessive vibration Computer Alarm Pts. L3122, L3123, L3124, L3125.

f. Excessive pump shaft or motor stand vibration indicated on PLF.

g. RCDT level rate of increase abnormal.

1.2 Immediate Action

A. Automatic Action

1. None

B. Manual Action

1. No. 1 Seal failure - as determined by uncontrolled No. 1 seal leakoff and sustained Lab seal ΔP for RCP-1A/1B/1D < 10" H_2O (seal injection still in operation) with normal radial Brg temps.

a. Close No. 1 Seal Leakoff within 5 minutes. (MU-V-33A-D)

b. Reduce power to between 50 - 75 Percent and secure the affected pump within 30 minutes.

2. No. 2 Seal failure - as determined by high standpipe level; excessive RC Drain Tank level increase, and abnormal vibration (< limits of Section 3).

a. Reduce power to between 50 - 75% and secure the affected pump within 24 hrs.

1.3 Follow-up Action

Objective: To stabilize RCP seal performance in a manner to either permit continued operation or permit a shutdown and cooldown with minimal damage to the seal package.

1.3.1 If a No. 1 or No. 2 seal failure has been mitigated by securing No. 1 seal leakoff and RCP shutdown, continued Power Operation may be authorized by the Plant Operations Director at power levels up to 75 Percent. Do not attempt to restart the idle RCP without permission of Plant Operations with concurrence from Plant Engineering Directors.

1.3.2 If No. 1 or No. 2 Seal Degradation has occurred as determined by abnormal seal performance developing over a period of days, the Plant Ops Director with concurrence from Plant Engineering may authorize continued operation under these circumstances, additional monitoring requirements and extended limits provided by the Plant Operations Director shall be observed.

The following considerations should determine when an RCP should be secured under these degraded conditions:

a. Without loss of seal injection, if Lab seal ΔP remains < 20" H_2O for a sustained period of time, reverse flow thru the radial bearing should be suspected. This indication is available for RCP-1A/1B/1D only. Continued operation in this mode is not recommended. If lab ΔP is unstable, its value is negative and with increasing radial Brg temps. then closure of No. 1 Seal leakoff isolation valve (MU-V-33A-D) is required.

NOTE

The conditions in (a) may also be an indication of turning vane diffuser bolt failure (Ref. Westinghouse Advisory 88-508).

b. If #1 seal leakoff (SLO) exceeds 8 gpm continuously, degradation of #1 seal is to the extent that a subsequent loss of seal injection (SI) has the potential to cause overheating of the radial bearing and seal package in a relatively short period of time. Continued operation of up to two reactor coolant pumps with sustained SLO > 8 gpm (up to a maximum of 14 gpm) is allowable as long as:

1. SLO has degraded gradually over a period of time and the response and associated parameters of the seal continues to indicate an otherwise normal performance.

2. Increased monitoring of SLO flow is performed as specified by the Plant Operations Director.

3. Additional precautions are taken to insure that a standby makeup pump is available to provide seal injection in the case where the operating makeup pump would trip.

c. RC Drain Tank level control considerations may restrict continued operation with No. 2 Seal degradation. Limiting aspects of RC Drain Tank control include level, temperature and maintaining additional tank capacity to receive what must be rejected from the RC Drain Tank.

d. If No. 1 Seal leakoff is low and below the recommendations of OP 1103-6, it may be indicative of either an abnormally tight No. 1 seal or most likely an abnormally open No. 2 Seal. A bucket check of No. 1 seal leakoff per OP 1103-6 is recommended under these circumstances. Continued operation of the RCP within the guidance provided above can be expected.

2.0 LOSS OF RCP MOTOR COOLING WATER

2.1 Symptoms

1. Loss of N.S.

a. Motor air temp. Hi computer alarm Pts. A0699, A0705, A0711, A0717.

b. RCP stator temp. Hi computer alarm Pts. A0704, A0710, A0716, A0722.

c. Motor upper guide bearing temp. Hi computer alarm Pts. A0702, A0708, A0714, A0720. Motor lower guide bearing temp. Hi computer alarm Pts. A0703, A0709, A0715, A0721.

d. Motor up thrust bearing temp. Hi computer alarm Pts. A0701, A0707, A0713, A0719. Motor down thrust bearing temp. Hi computer alarm Pts. A0700, A0706, A0712, A0718.

2.2 Immediate Action

A. Automatic Action

None

B. Manual Action

1. On loss of N.S., if any of the following temperatures are exceeded, reduce power to 50-75 Percent and trip the affected pump.

a. Motor Stator > 150°C. (302°F).

b. Motor Radial Bearings > 185°F.

c. Motor Thrust Bearings > 195°F.

2.3 Follow-up Action

Objective: To prevent damage to RCP due to excessive temperature.

_____ 1. Re-establish cooling water flow.

3.0 PUMP AND MOTOR VIBRATION

3.1 Symptoms

> **NOTE**
>
> Pump shaft vibration alarms are Alert: 15 mils, Danger: 20 mils. Motor stand vibration alarms are Alert: 3 mils, Danger: 7 mils. Setting the toggle switch to "Trip Multiply" on PLF doubles the alarm limits and causes the red bypass lights to flash.

a. Excessive pump shaft or motor stand vibration indicated on PLF.

b. High vibration computer alarm points L3122, L3123, L3124, L3125.

3.2 Immediate Action

A. Automatic Action

1. None

B. Manual Action

1. Reset alarms:

a. Reset for motor stand vibration on Bently Nevada System on PLF.

b. Reset for shaft vibration on Bently Nevada System on PLF.

2. If vibration alarms reoccur immediately, reduce power to 50 - 75 Percent and trip affected RCP.

3.3 Follow-up Action

Objective: To prevent damage to RCP due to excessive vibration.

_____ 1. Determine cause and repair.

4.0 REVERSE ROTATION

4.1 Symptoms

a. Excessive vibration due to backstop failure.

b. Computer points L2875, L2876, L2877 or L2878 for applicable RC pump in alarm.

4.2 Immediate Action

A. Automatic Action

1. None

B. Manual Action

1. Start the oil lift systems on the affected pump.

4.3 Follow-up Actions

Objective: To place the plant in a safe condition and prevent further damage to the RCP.

____ 1. Upon orders from the SS/SF, commence a Normal Plant Shutdown and Cooldown of the RCS per 1102-10 and 1102-11.

____ 2. Stop all the Reactor Coolant Pumps, as soon as possible, in accordance with the Plant Cooldown Procedure 1102-11.

____ 3. Determine the cause and repair.

5.0 LUBE OIL EMERGENCY

5.1 Symptoms

a. Low lift pump discharge oil pressure alarm 1750 psig on computer and affected RCP trouble ann. alarm (F-2-1, 2, 3, 4).

b. High bearing temp. alarms on computer

RCP	A	B	C	D
Upper Guide	A0702	A0708	A0714	A0720
Lower Guide	A0703	A0709	A0715	A0721
Up Thrust	A0701	A0707	A0713	A0719
Down Thrust	A0700	A0706	A0712	A0718

c. Levels on upper and lower oil pots on computer

RCP	A	B	C	D
Upper Oil Pot	A0961	A0963	A0965	A0967
Lower Oil Pot	A0962	A0964	A0966	A0968

d. RCP lube oil flow Hi/Lo, thrust runner pump discharge Hi 12.7 gpm Ann. Affected RCP trouble alarm Lo 7 gpm computer (F-2-1, 2, 3, 4).

e. RCP Backstop oil flow Lo computer alarm Pts L2784, L2795, L2806, L2817.

5.2 Immediate Action

A. Automatic Action

1. D.C. oil lift pump starts on low oil press. 1750 psig, if RC pump breaker is open.

B. Manual Action

1. Verify auto start of D.C. oil lift pump. If not, start manually.

2. If high motor bearing temps (Radial >185°, thrust > 195°F) are being approached, reduce reactor power to 50 - 75 Percent and trip affected pump.

5.3 Follow-up Action

Objective: To prevent damage to RCP due to loss of oil to bearings.

_____ 1. If low flow exists on lift and/or backstop system, start lift and/or backstop pumps on affected RCP.

_____ 2. If Hi/Lo levels exist in oil pots, reduce reactor power to 75 Percent and secure affected pump.

_____ 3. A possibility of oil fire exists if the oil systems have ruptured in case of oil fire. The plant will be shutdown and cooled down to < 400°F which is the flash point of oil used in system.

_____ 4. Determine cause and repair.

6.0 PUMP MOTOR SEPARATION - DROPPED IMPELLER

6.1 Symptoms

a. Low motor current ind. above RCP C/S.

b. Low R.C.S. flow ind. on Console "CC".

c. Hi vibration:

1. Motor stand on computer, Pts L3122, L3123, L3124, L3125.

2. Shaft - Bently Nevada Sys. - Alarm lights.

6.2 Immediate Action

A. Automatic Action

1. Possible reactor trip on power to flow.

B. Manual Action

1. Commence Plant Shutdown.

2. Secure affected RCP.

6.3 Follow Up Action

Objective: To place the plant in a safe condition.

_____ 1. Proceed to cold shutdown per 0P 1102-11.

_____ 2. Determine cause and repair.

Facility: Three Mile Island **Date of Exam:** February 2000 **Exam Level:** RO

Tier	Group	K/A Category Points											Point Total
		K 1	K 2	K 3	K 4	K 5	K 6	A 1	A 2	A 3	A 4	G *	
1. Emergency & Abnormal Plant Evolutions	1	3	4	3				3	2			1	16
	2	1	1	2				6	6			1	17
	3	2	--	--				1	--			--	3
	Tier Totals	6	5	5				10	8			2	36
2. Plant Systems	1	4	2	1	3	3	1	2	3	2	1	1	23
	2	2	--	1	4	1	1	2	1	1	5	2	20
	3	--	--	--	2	--	--	2	1	--	2	1	8
	Tier Totals	6	2	2	9	4	2	6	5	3	8	4	51

3. Generic Knowledge and Abilities	Cat 1	Cat 2	Cat 3	Cat 4	13
	5	4	2	2	

Note:
1. Ensure that at least two topics from every K/A category are sampled within each tier (i.e., the "Tier Totals" in each K/A category shall not be less than two).
2. Actual point totals must match those specified in the table.
3. Select topics from many systems; avoid selecting more than two or three K/A topics from a given system unless they relate to plant-specific priorities.
4. Systems/evolutions within each group are identified on the associated outline.
5. The shaded areas are not applicable to the category/tier.
6. * The generic K/As in Tiers 1 and 2 shall be selected from Section 2 of the K/A Catalog, but the topics must be relevant to the applicable evolution or system.
7. On the following pages, enter the K/A numbers, a brief description of each topic, the topics' importance ratings for the RO license level, and the point totals for each system and category. K/As below 2.5 should be justified on the basis of plant-specific priorities. Enter the tier totals for each category in the table above.

ORIGINAL

Emergency and Abnormal Plant Evolutions - Tier 1/Group 1

E/APE # / Name / Safety Function	K1	K2	K3	A1	A2	G	K/A Topic(s)	Imp.	Points
000005 Inoperable/Stuck Control Rod / 1	.02						AK1.01 Page 4.2-6 CFR41.8 Q # 001 Operational implications of quadrant power tilt.	3.1	1.0
000015/17 RCP Malfunctions / 4				.02			AA1.02 Page 4.2-11 CFR41.7 Q # 002 Ability to operate/monitor oil reservoir level level/alarms.	2.8	1.0
BW/E09; CE/A13; W/E09&E10 Natural Circ. / 4		.2					EK2.2 Page 4.3-15 CFR41.7 Q # 003 Heat removal systems operational interrelationships.	4.0	1.0
000024 Emergency Boration / 1				.26			AA1.26 Page 4.2-15 CFR41.7 Q # 004 Operate/Monitor Boric Acid Mix Tank level.	3.3	1.0
000026 Loss of Component Cooling Water / 8					.02		AK2.02 Page 4.2-19 CFR45.13 Q # 005 ID cause of possible loss of ICCW/NSCCW system.	2.9	1.0
000027 Pressurizer Pressure Control System Malfunction / 3		.03					AK2.03 Page 4.2-20 CFR41.7 Q # 006 Predict/monitor/control effects of Pzr pressure control malfunction (transmitter fails low).	2.6	1.0
000040 (BW/E05; CE/E05; W/E12) Steam Line Rupture - Excessive Heat Transfer / 4	.05						AK1.05 Page 4.2-31 CFR41.8 Q # 007 Reactivity effects of excessive C/D on Steam Line Break.	4.1	1.0
CE/A11; W/E08 RCS Overcooling - PTS / 4									
000051 Loss of Condenser Vacuum / 4									
000056 Station Blackout / 6	.04						AK1.04 Page 4.2-37 CFR41.8 Q # 008 Definition of saturated water conditions.	3.1	1.0
000057 Loss of Vital AC Elec. Inst. Bus / 6			.01				AK3.01 Page 4.2-41 CFR41.5 Q # 009 EP actions for loss of instrumentation bus (Auto or Hand/Auto Power).	4.1	1.0
000062 Loss of Nuclear Service Water / 4			.03				AK3.03 Page 4.2-49 CFR41.4 Q # 010 Actions for loss of NR cooling system.	4.0	1.0
000067 Plant Fire On-site / 9					.05		AA2.05 Page 4.2-53 CFR45.13 Q # 011 Actions to secure ventilation to area affected by a fire.	3.2	1.0
000068 (BW/A06) Control Room Evac. / 8				.23			AA1.23 Page 4.2-55 CFR41.7 Q # 012 Manual trip of reactor & turbine on CR evacuation.	4.3	1.0
000069 (W/E14) Loss of CTMT Integrity / 5									
000074 (W/E06&E07) Inad. Core Cooling / 4									
BW/E03 Inadequate Subcooling Margin / 4						2.2	2.2.2 Page 2-5 CFR45.2 Q # 013 Control manipulations during inadequate core cooling.	4.0	1.0
000076 High Reactor Coolant Activity / 9		.01					AK2.01 Page 4.2-58 CFR41.7 Q # 014 RMS response to high RCS activity.	2.6	1.0
BW/A02&A03 Loss of NNI-X/Y / 7 **(HAND POWER)**			.2				AK3.2 Page 4.3-29 CFR41.5, .10 Q # 015 Loss of NNI Hand Power EP IAs.	3.7	1.0
000040 (BW/E05; CE/E05; W/E12) Steam Line Rupture – Excessive Heat Transfer / 4		.01					AK2.01 Page 4.2-31 CFR41.7 Q # 016 HSPS Valve response to Main Steam line rupture.	2.6	1.0
K/A Category Totals:	3	4	3	3	2	1	Group Point Total: 16		16

ORIGINAL

E/APE # / Name / Safety Function	K1	K2	K3	A1	A2	G	K/A Topic(s)	Imp.	Points
000001 Continuous Rod Withdrawal / 1					.01		AA2.03 Page 4.2-3 CFR45.13 Q # 017 Indications of Rx trip breaker status following manual trip for continuous rod withdrawal with high startup rate.	4.2	1.0
000003 Dropped Control Rod / 1						4.1	2.4.1 Page 2-11 CFR41.10 Q # 018 Dropped control or safety rod EP entry conditions, actions.	4.3	1.0
000007 (BW/E02&E10; CE/E02) Reactor Trip – Stabilization - Recovery / 1				.2			EA1.2 Page 4.3-19 CFR41.7 Q # 019 Operate/monitor operating behavior characteristics for Rx Trip.	3.5	1.0
BW/A01 Plant Runback / 1				.1			AA1.1 Page 4.3-27 CFR41.7 Q # 020 Actions for failure of ICS runback to occur.	3.7	1.0
BW/A04 Turbine Trip / 4				.1			AA1.1 Page 4.3-33 CFR41.7 Q # 021 Operate/monitor turbine trip interlocks.	3.5	1.0
000008 Pressurizer Vapor Space Accident / 3					.30		AA2.30 Page 4.2-9 CFR45.13 Q # 022 ID loss of SCM - inadequate cooling on Pzr steam space leak.	4.3	1.0
000009 Small Break LOCA / 3		.03					EK2.03 Page 4.1-4 CFR41.5/10 Q # 023 ID why PSHT is required on Small Break LOCA.	3.0	1.0
			.17				EK3.17 Page 4.1-4 CFR41.4/10 Q # 024 Containment isolation interlocks on Small Break LOCA.	4.0	1.0
000011 Large Break LOCA / 3					.11		EA2.11 Page 4.1-8 CFR45.13 Q # 025 ID requirement for throttling HPI flow.	3.9	1.0
W/E04 LOCA Outside Containment / 3									
BW/E08 W/E03 LOCA Cooldown/Depress. / 4									
W/E11 Loss of Emergency Coolant Recirc. / 4									
W/EO1 & E02 Rediagnosis & SI Termination / 3									
000022 Loss of Reactor Coolant Makeup / 2				.06			AA1.01 Page 4.2-13 CFR41.7 Q # 026 MUP ammeters/indicators during loss of MU.	2.9	1.0
000025 Loss of RHR System / 4			.02				AK3.02 Page 4.2-16 CFR41.5/10 Q # 027 ID reason for DH-V-1 & DH-V-2 400# interlocks.	3.3	1.0
000029 Anticipated Transient w/o Scram / 1									
000032 Loss of Source Range NI / 7									
000033 Loss of Intermediate Range NI / 7									
000037 Steam Generator Tube Leak / 3					.12		AA2.12 Page 4.2-30 CFR45.13 Q # 028 Analyze data to determine value of OTSG Tube Leak flow rate.	3.3	1.0
000038 Steam Generator Tube Rupture / 3									
000054 (CE/E06) Loss of Main Feedwater / 4					.03		AA2.03 Page 4.2-36 CFR45.13 Q # 029 ID conditions/reasons for EFW start following (LOFW) loss of FPs.	4.1	1.0
BW/E04; W/E05 Inadequate Heat Transfer - Loss of Secondary Heat Sink / 4	.2						EK1.2 Page 4.3-7 CFR41.8/10 Q # 030 Explain why RCPs are required to be tripped if RCS superheated.	4.0	1.0
000058 Loss of DC Power / 6				.01			AA1.01 Page 4.2-43 CFR41.7 Q # 031 ID basis for AC/DC breaker ops during charger restoration following loss of DC.	3.4	1.0
000059 Accidental Liquid RadWaste Rel. / 9									
000060 Accidental Gaseous RadWaste Rel. / 9					.05		AA2.05 Page 4.2-47 CFR45.13 Q # 032 Automatic RMS actions for accidental radioactive gas release.	3.7	1.0
000061 ARM System Alarms / 7				.01			AA1.01 Page 4.2-48 CFR41.7 Q # 033 Automatic RMS (RM-A-X) interlock.	3.6	1.0
W/E16 High Containment Radiation / 9									
CE/E09 Functional Recovery									
K/A Category Point Totals:	1	1	2	6	6	1	Group Point Total: 17		17

ORIGINAL

Emergency and Abnormal Plant Evolutions - Tier 1/Group 3

E/APE # / Name / Safety Function	K1	K2	K3	A1	A2	G	K/A Topic(s)	Imp.	Points
000028 Pressurizer Level Malfunction / 2				.03			AA1.03 Page 4.2-23 CFR41.7 Q # 034 Operation of RCP Seal Injection during Pzr Level Control malf.	2.9	1.0
000036 (BW/A08) Fuel Handling Accident / 8									
000056 Loss of Off-site Power / 6									
000065 Loss of Instrument Air / 8									
BW/E13&E14 EOP Rules and Enclosures	.2						EK1.2 Page 4.3-21 CFR41.8/10 Q # 035 1210-10 ATOG Rule/Guideline Question.	3.0	1.0
BW/A05 Emergency Diesel Actuation / 6	.2						AK2.1 Page 4.3-34 CFR41.7 Q # 036 OP/EP regarding actuation of EDGs.	4.0	1.0
BW/A07 Flooding / 8									
CE/A16 Excess RCS Leakage / 2									
W/E13 Steam Generator Over-pressure / 4									
W/E15 Containment Flooding / 5									
K/A Category Point Totals:	2			1			Group Point Total: 3		3

ORIGINAL

System # / Name	K1	K2	K3	K4	K5	K6	A1	A2	A3	A4	G	K/A Topic(s)	Imp	Pts
001 Control Rod Drive				.15								K4.15 Page 3.1-4 CFR41.7 Q # 037 Operation of latch controls.	2.7	1.0
001 Control Rod Drive						.11						K6.11 Page 3.1-8 CFR41.7 Q # 038 Asymmetric rod fault detection/alarms.	2.9	1.0
003 Reactor Coolant Pump		.02										K2.02 Page 3.4-6 CFR41.7 Q # 039 ICCW pump PSs.	2.5	1.0
003 Reactor Coolant Pump							.05					A1.05 Page 3.4-8 CFR 41.5 Q # 040 RCP low flow protection.	3.4	1.0
004 Chemical and Volume Control							.09					A1.09 Page 3.2-12 CFR41.5 Q # 041 MU Sys. ops to prevent RCS over P/T.	3.6	1.0
004 Chemical and Volume Control									.02			A3.02 Page3.2-14 CFR41.7 Q # 042 Automatic RCS letdown isolation.	3.6	1.0
013 Engineered Safety Features Actuation	.03											K1.03 Page 3.2-24 CFR41.2-.9 Q #043 CCS response to ESAS actuation.	3.8	1.0
013 Engineered Safety Features Actuation								.01				A2.01 Page 3.2-26 CFR41.5 Q # 044 ESAS LOCA response.	4.6	1.0
013 Engineered Safety Features Actuation				.11								K4.11 Page 3.2-25 CFR41.7 Q #045 ESAS interlocks which provide for vital power load control.	3.2	1.0
015 Nuclear Instrumentation			.04									K3.04 Page 3.7-5 CFR41.7 Q # 046 Effect of loss of NI signal to ICS at power.	3.4	1.0
015 Nuclear Instrumentation				.08								K4.08 Page 3.7-6 CFR41.7 Q # 047 $_0N^1$ error rod motion command signal.	3.4	1.0
017 In-core Temperature Monitor					.02							K5.02 Page 3.7-11 CFR41.5 Q # 048 Use of ITC to determine SCM.	3.7	1.0
022 Containment Cooling								.04				A2.04 Page 3.5-6 CFR41.5 Q # 049 Instrument accuracy effects due to post-LOCA atmosphere.	2.9	1.0
025 Ice Condenser														
056 Condensate								.04				A2.04 Page 3.4-39 CFR41.5 Q # 050 Impact of loss of Cond. pump at low power level.	2.6	1.0
056 Condensate	.03											K1.03 Page 3.4-36 CFR41.2-.9 Q#051 MFW/Condensate System interrelations.	2.6	1.0
059 Main Feedwater	.07											K1.07 Page 3.4-41 CFR41.2-.9 Q # 052 MFW/ICS interrelations.	3.2	1.0
059 Main Feedwater											1.30	2.1.30 Page 2-4 CFR41.7 Q # 053 Local/manual Main FW controls.	3.9	1.0
061 Auxiliary/Emergency Feedwater		.02										K2.02 Page 3.4-45 CFR41.7 Q # 054 EF-P-2A/B power supplies.	3.7	1.0
061 Auxiliary/Emergency Feedwater					.01							K5.01 Page 3.4-46 CFR41.5 Q # 055 RCS heat transfer using EFW.	3.6	1.0
068 Liquid Radwaste										.02		A4.02 Page 3.9-4 CFR41.7 Q # 056 Monitor/control liquid rad. Release.	3.2	1.0
071 Waste Gas Disposal					.04							K5.04 Page 3.9-6 CFR41.5 Q # 057 H_2/O_2 flammability concentrations.	2.5	1.0
072 Area Radiation Monitoring	.04											K1.04 Page 3.7-13 CFR41.2-.9 Q#058 Control Bldg ventilation RMS interlocks.	3.3	1.0
072 Area Radiation Monitoring									.01			A3.01 Page 3.7-14 CFR41.7 Q # 059 RMS ventilation alignment changes.	2.9	1.0
K/A Category Point Totals:	4	2	1	3	3	1	2	3	2	1	1	Group Point Total: 23		23

ORIGINAL

System # / Name	K1	K2	K3	K4	K5	K6	A1	A2	A3	A4	G	K/A Topic(s)	Imp	Pts
002 Reactor Coolant					.11							K5.11 Page 3.4-3 CFR41.5 Q # 060 Primary to Secondary Heat Transfer B-C Cooling elevation requirements.	4.0	1.0
006 Emergency Core Cooling										.06		A4.06 Page 3.2-20 CFR41.7 Q # 061 ESAS manual controls.	4.4	1.0
010 Pressurizer Pressure Control											4.49	2.4.49 Page 2-16 CFR41.10 Q # 062 Response to WR T_C failure low.	4.0	1.0
011 Pressurizer Level Control						.03						K6.03 Page 3.2-22 CFR41.7 Q # 063 Pzr level instr. failure effect on heater cutout intlk.	3.3	1.0
012 Reactor Protection	.03											K1.03 Page 3.7-2 CFR41.2-.9 Q # 064 RPS-CRD System interface.	3.7	1.0
014 Rod Position Indication							.02					A1.02 Page 3.1-22 CFR41.5 Q # 065 ID actions required to prevent violation of rod insertion index limit.	3.2	1.0
016 Non-nuclear Instrumentation				.03								K4.03 Page 3.7-10 CFR41.7 Q # 066 NNI input to control systems.	2.8	1.0
026 Containment Spray										.01		A4.01 Page 3.5-13 CFR41.7 Q # 067 Manual operation of RB Spray System.	4.5	1.0
029 Containment Purge				.03								K4.03 Page 3.8-6 CFR 41.7 Q # 068 RB Purge automatic isolation interlocks.	3.2	1.0
033 Spent Fuel Pool Cooling									.02			A3.02 Page 3.8-10 CFR41.7 Q # 069 SF Cooling response to spent fuel leak/rupture.	2.9	1.0
035 Steam Generator							.01					A1.01 Page 3.4-16 CFR 41.5 Q # 070 OTSG LLL control on plant SU/SD with 3 RCPs.	3.6	1.0
039 Main and Reheat Steam										.04		A4.04 Page 3.4-22 CFR41.7 Q # 071 EF-P-1 auto/manual operation.	3.8	1.0
055 Condenser Air Removal	.06											K1.06 Page 3.4-33 CFR 41.2-.9 Q # 072 Condenser off-gas/RMS relationship for low vacuum w/ADVs open.	2.6	1.0
062 AC Electrical Distribution										.02		A4.02 Page 3.6-5 CFR 41.7 Q # 073 CS, light status with BDDs in various positions.	2.5	1.0
063 DC Electrical Distribution				.01								K4.01 Page 3.6-6 CFR41.7 Q # 074 1M DC Bus automatic transfer interlocks.	2.7	1.0
064 Emergency Diesel Generator											1.30	2.1.30 Page 2-4 CFR41.7 Q # 075 Operate EDG.	3.9	1.0
073 Process Radiation Monitoring										.02		A4.02 Page 3.7-16 CFR41.7 Q # 076 Manually operate/back-up RMS auto interlocks.	3.7	1.0
075 Circulating Water								.03				A2.03 Page 3.8-16 CFR41.5 Q # 077 Auto/manual actions for loss of CW/low vacuum.	2.5	1.0
079 Station Air				.01								K4.01 Page 3.8-21 CFR41.7 Q # 078 Service Air to Instrument Air cross-tie.	2.9	1.0
086 Fire Protection			.01									K3.01 Page 3.8-23 CFR=41.7 Q # 079 Shutdown capability w/redundant equipment following failure of Fire Protection System.	2.7	1.0
K/A Category Point Totals:	2	--	1	4	1	1	2	1	1	5	2	Group Point Total: 20		20

ORIGINAL

System # / Name	K1	K2	K3	K4	K5	K6	A1	A2	A3	A4	G	K/A Topic(s)	Imp	Pts
005 Residual Heat Removal								.04				A2.04 Page 3.4-13 CFR 41.5 Q # 080 Predict/mitigate impact of DHR valve failure.	2.9	1.0
007 Pressurizer Relief/Quench Tank														
008 Component Cooling Water				.09								K4.09 Page 3.8-3 CFR 41.7 Q # 081 IC-P-1A/1B automatic standby start interlock.	2.7	1.0
027 Containment Iodine Removal										.02		A4.02 Page 3.5-15 CFR41.7 Q # 082 Kidney filter iodine removal system operation -- charcoal filter protection.	2.8	1.0
028 H_2 Recombiner/Purge Control														
034 Fuel Handling Equipment							.02					A1.02 Page 3.8-13 CFR41.5 Q # 083 FH actions for Refueling Canal low level.	2.9	1.0
041 Steam Dump/TBV Control										.06		A4.06 Page 3.4-25 CFR41.7 Q # 084 Manual Atmospheric Dump Valve control.	2.9	1.0
045 Main Turbine Generator				.47								K4.47 Page 3.4-29 CFR41.7 Q # 085 Source of turbine trip signal from reactor trip.	4.0	1.0
076 Service Water							.02					A1.02 Page 3.4-50 CFR=41.5 Q # 086 Loss of RW Sys effects on SCCS temperatures.	2.6	1.0
078 Instrument Air											4.4	2.4.4 Page 2-11 CFR41.10 Q # 087 Use symptoms to ID required entry to EOP/AbP.	4.0	1.0
103 Containment														
K/A Category Point Totals:	--	--	--	2	--	--	2	1	--	2	1	Group Point Total: 8		8

Plant-Specific Priorities

System / Topic	Recommended Replacement for.	Reason	Points
Plant-Specific Priority Total: (limit 10)			

ORIGINAL

Facility: Three Mile Island Date of Exam: February 2000 Exam Level: RO

Category	K/A #	Topic	Imp.	Points
Conduct of Operations	2.1.29	Page 2- 4 CFR 41.10 Q # 088 Performance of valve lineup, independent verification.	3.4	1.0
	2.1.2	Page 2-1 CFR 41.10 Q # 089 Control Room Operator responsibilities - trip Rx if ...	3.0	1.0
	2.1.1	Page 2-1 CFR = 41.10 Q # 090 Conduct of Operations question.	3.7	1.0
	2.1.25	Page 2-3 CFR = 41.10 Q # 091 Given plant operational data, interpret graph to determine low gas pressure T-G load limit.	2.8	1.0
	2.1.30	Page 2-4 CFR = 41.7 Q # 092 MOV local manual operations requirements – AP 1029.	3.9	1.0
	Total			5
Equipment Control	2.2.11	Page 2-6 CFR = 41.10 Q # 093 Documentation and approval requirements for temporary valve lineup changes.	2.5	1.0
	2.2.12	Page 2-6 CFR = 41.10 Q # 094 Actions required when surveillance procedure acceptance criteria is not met.	3.0	1.0
	2.2.13	Page 2-6 CFR = 41.10 Q # 095 Approval requirements for operation of blue-tagged equipment.	3.6	1.0
	2.2.13	Page 2-6 CFR = 41.10 Q # 096 Clearance requirements for maintenance to work on tagged equipment.	3.6	1.0
	Total			4
Radiation Control	2.3.1	Page 2-9 CFR = 41.12 Q # 097 Approval requirements for emergency condition exposures over normal limits.	2.6	1.0
	2.3.2	Page 2-9 CFR = 41.12 Q # 098 Knowledge of facility ALARA program.	2.5	1.0
	Total			2
Emergency Procedures/ Plan	2.4.2	Page 2-11 CFR = 41.7 Q # 099 Given setpoints, interlocks, automatic actions, enter correct EOP.	3.9	1.0
	2.4.31	Page 2-14 CFR = 41.10 Q # 100 Use of alarms/indicators to identify EP entry is required.	3.3	1.0
	Total			2
Tier 3 Point Total (RO)				13

ORIGINAL

ORIGINAL

ES-301 Control Room Systems and Facility Walk-Through Test Outline Form ES-301-2

Facility: TMI
Exam Level: RO

Date of Examination: Week of 2/14/2000
Operating Test Number: _____

System / JPM Title	Type Code*	Safety Function
B.1 Control Room Systems		
a. 001 / Perform a safety group withdrawal (TMI task #0010180101; K/A = K4.13, RO = 3.4)	N, A, S, L JPM #177	1
b. 004 / Perform recovery from high temp. letdown isolation ** (TMI task #004C010101; K/A = A4.06, RO = 3.6)	M, S JPM #119	2
c. 010 / Respond to decreasing or low RCS pressure (TMI task #0008350501; K/A = A2.02, RO = 3.9)	N, A, S JPM #178	3
d. 059 / Transfer MFW pump control between ICS and motor speed changer *** (TMI task #0598060401; K/A = K1.07, RO = 3.2)	D, S JPM #116	4
e. 022 / Perform required actions if containment temperature cannot be controlled within specified limits (TMI task #0020070401; K/A = A4.02, RO = 3.2)	D, A, S JPM #079	5
f. 064 / Return 4KV ES bus to its normal power supply *** (TMI task #0620080101; K/A = A2.09, RO = 3.1)	D, S, L JPM #064	6
g. 012 / Energize and reset RPS channel ** (TMI task #0120010101; K/A = A2.02, RO = 3.6)	D, S JPM #153	7
B.2 Facility Walk-Through		
a. 004 / Perform emergency boration lineup. (TMI task #009A010204; K/A = A2.14, RO = 3.8)	D, L, R JPM #109	1
b. 063 / Respond to loss of A-DC (TMI task #0000580504; K/A = AK3.02, RO = 4.0)	D JPM #067	6
c. 086 / Manually actuate relay room CO2 system (TMI task #0868040101; K/A = K4.06, RO = 3.0)	M, A, L JPM #045	8

* Type Codes: (D)irect from bank, (M)odified from bank, (N)ew, (A)lternate path, (C)ontrol room, (S)imulator, (L)ow-Power, (R)CA

** 119 and 153 may be performed simultaneously *** 064 and 116 may be performed simultaneously

Facility: TMI-1 NRC RO Exam	Date of Examination: 02 /14/2000
Examination Level (circle one): RO / SRO	Operating Test Number: _____

Administrative Topic/Subject Description		Describe method of evaluation: 1. ONE Administrative JPM, OR 2. TWO Administrative Questions
A.1	**Conduct of Operations:** **Shutdown Margin Calculation** **K/A 2.1.25 RO 2.8** **TMI Task 0010040101 RO 2.6**	JPM: RO is tasked to calculate Shutdown Margin given plant conditions that will involve one inoperable control rod.
	Conduct of Operations: **Computer Leakrate Calculation** **K/A 2.1.19 RO 3.0** **TMI Task 0020010201 RO 2.49**	JPM: Given a RCS leak the RO is tasked to perform a RCS leak rate calculation using the plant process computer and then evaluate the results against Technical Specifications.
A.2	**Equipment Control:** **Verify EDG Operability** **K/A 2.2.14 RO 2.5** **TMI Task 0640010101 RO 2.61**	JPM: RO is tasked to verify / place an emergency diesel generator in ES standby following a surveillance for a test run.
A.3	**Radiation Control:** **RWP Entry & Exit Requirements Survey Map** **K/A 2.3.1 RO 2.6**	JPM: RO is tasked to enter and exit a radiological area. This task includes reviewing the RWP and Survey Map.
A.4	**Emergency Plan:** **Emergency Communications** **K/A 2.4.43 RO 2.8** **TMI Task 5010045003 RO 2.90**	JPM: RO is tasked to perform the required offsite notifications following an Emergency Plan Declaration.

ORIGINAL

Facility: TMI Scenario No. 1 (70 minutes) Op-Test No.: DAY-1

Examiners: _____ Operators: _____

Objectives: To evaluate applicants' ability to: transfer ICS stations back to automatic per 1105-4; diagnose and respond to a loss of RC pump seal injection flow per 1203-15, and then an RC pump #1 seal failure per 1203-16; reduce reactor power and secure the RC pump; diagnose and respond to an RCS leak in containment per alarm responses; respond to a reactor trip with failure of the main turbine to automatically trip per 1210-1; respond to an ES actuation with failure of B-train HPI pump to automatically start per 1210-1 and 1210-10; and diagnose and respond to an increase in RCS leakrate and loss of 25° F subcooled margin per 1210-2 and 1210-6.

Initial Conditions: IC15 (100% power, BOC), with RR-P-1A out of service, and the following ICS stations in hand: SG/Rx master, both FW loop masters, all four FW valve stations, both FW pump stations, and delta-Tc station with demand at zero (0).

Turnover: Plant is at 100% power, BOC, with RR-P-1A out of service for shaft bearing replacement (4 hours into 16 hour estimated work time).

The following ICS stations are in hand: SG/Rx master, both FW loop masters, all four FW valve stations, both FW pump stations, and delta-Tc. Maintenance has been completed on the FW ratio and BTU limit circuits, and ICS must be returned to full automatic.

Event No.	Action No.	Event Type*	Event Description
1	N/A	N (BOP)	Return ICS to full automatic.
2	AOR** MU07	I (RO) C (RO)	MU-FT-42, RCP seal injection flow fails high (80 gpm) **02A3M05-ZAOMU42FI FLO MU-42FI. MU-V-32, RCP seal injection flow control valve closes.
3	MU19A	C (RO) R (RO)	RC-P-1A #1 seal failure; 100% severity (50 gpm) over 60 seconds. Reduce power to 70% and secure RC-P-1A.
4	RC08B	I (BOP)	RC5A-TE3 (selected loop-A T-cold) fails; 0% severity (520°F) ramped in over 30 seconds when RC-P-1A is secured. Event Trigger: THA0427<5.0
5	TH06	M (ALL)	LOCA at RC-P-1A; 0.15% severity (1500 gpm) ramped in over 100 seconds.
6	TC02	C (BOP)	Main turbine fails to automatically trip when reactor trips.
7	MU23C	C (RO)	MU-P-1C fails to automatically start on ES signal.
8	N/A	M (ALL)	Loss of 25°F RCS subcooled margin and small break LOCA cooldown.

* (N)ormal, (R)eactivity, (I)nstrument, (C)omponent, (M)ajor

Op-Test No.: DAY-1 Scenario No.: 1 Event No.: 1 Page 1 of 9

Event Description: When directed by SRO, the following ICS stations are returned to auto per 1105-4: SG/Rx master, both FW loop masters, all four FW valve stations, both FW pump stations, and delta-Tc station.

Time	Position	Applicant's Actions or Behavior
	BOP	Reviews guidelines for returning ICS stations to auto during power operation per 1105-4, Appendix 7.
	BOP	Checks error on all stations in hand, and notes error on FW loop masters.
	BOP	Raises delta-Tc station demand to 50% to zero errors on FW loop master stations.
	BOP	Transfers ICS stations back to auto per 1105-4 as follows: • FW-V-17A/B • FW-V-16A/B • FW Loop Masters A and B • Delta-Tc • FW-P-1A/B • SG/Rx Master
	BOP	Verifies ICS Track alarm, H-2-1, clears.

Op-Test No.: DAY-1 Scenario No.: 1 Event No.: 2 Page 2 of 9

Event Description: Following ICS return to full auto, MU-FT-42 RCP seal injection flow indication fails high (80 gpm) over 10 seconds, causing MU-V-32 RCP seal injection flow control valve to close in auto resulting in loss of RCP seal injection. RCP seal injection must be restored per 1203-15.

Time	Position	Applicant's Actions or Behavior
	RO	Recognize RCP seal injection flow transient by the following alarms and indications: • F-1-5, F-1-6 • RC-18-DPI-1/2/3/4 off-scale low • MU-42-FI1 indicates 80 gpm • MU-V-32 station demand indicates zero (0)
	RO	Diagnose actual loss of RCP seal injection as indicated by low RCP labyrinth seal delta-p indications (RC-18-DPI-1/2/3/4) off-scale low and alarm F-1-6, caused by MU-V-32 closure.
	RO	Transfer MU-V-32 station to hand, and increase demand to reopen MU-V-32 and restore RCP seal injection flow as directed by SRO per 1203-15.
	RO	Monitor RCP seal parameters (RC-18-DPI-1/2/3/4) to verify RCP seal injection flow is being re-established.
	RO	Monitor RCP radial bearing temperatures on PPC to ensure temperatures do not decrease faster than 1°F per minute as RCP seal injection flow is restored per 1203-15.
	RO	Obtain 38 gpm RCP seal injection flow as indicated on PPC.
	RO	Recognize that MU-V-32 station must remain in hand.

Op-Test No.: DAY-1 Scenario No.: 1 Event No.: 3 Page 3 of 9

Event Description: After RCP seal injection flow has been restored to 38 gpm, RC-P-1A #1 seal fails open over 60 seconds (50 gpm leakage). Immediate actions of 1203-16 must be performed to limit the leakage, reduce reactor power, and secure RC-P-1A.

Time	Position	Applicant's Actions or Behavior
	RO	Diagnose symptoms of RCP #1 seal failure on RC-P-1A: • Alarms F-1-6, F-1-4, F-1-3, D-2-2, LWDS-1-5 (delayed) • RC-18-DPI-1 off-scale low • MU-13-DPI-1 goes low • Increased vibration on Bentley-Nevada • RC-P-1A seal leakoff flow high (>12 gpm) on recorder and PPC
	RO	Close MU-V-33A, seal return isolation valve, per 1203-16.
	RO	Recognize requirement to reduce power and secure RC-P-1A per 1203-16.
	RO	Operate ICS Unit Load Demand and Rate of Change controls to effect a power reduction as directed by SRO.
	BOP/RO	Monitor critical parameters during the reactor power reduction to the reactor power specified by SRO.
	BOP/RO	Verify reactor power stabilizes at target power level.
	RO	Manipulate RC-P-1A controls per 1103-6 to secure the pump when directed by the SRO.

Op-Test No.: DAY-1 Scenario No.: 1 Event No.: 4 Page 4 of 9

Event Description: When RC-P-1A is secured, selected RCS loop-A T-cold, RC5A-TE3, fails low to 520°F over 30 seconds. This failure results in a SASS mismatch and inhibits ICS re-ratio of MFW to correct RCS delta-Tc. FW Loop Masters must be adjusted in hand to obtain zero delta-Tc.

Time	Position	Applicant's Actions or Behavior
	BOP	Monitor automatic ICS re-ratio of MFW when RC-P-1A is secured, to correct RCS delta-Tc induced by RCS flow transient.
	BOP	Recognize SASS mismatch on RCS loop-A T-cold by alarm H-3-2 and panel indications.
	BOP	Acknowledge high delta-Tc alarm H-2-4 and sustained RCS delta-Tc on panel indication.
	BOP	Respond to SASS mismatch per H-3-2 as follows: • Transfer ICS FW Loop Masters to hand • Select alternate RCS loop-A T-cold instrument, RC5A-TE1
	BOP	Adjust ICS FW Loop Master demands as necessary to obtain zero (0) delta-Tc while maintaining correct total FW flow for reactor power.
	BOP	Obtain zero errors on FW Loop Master stations and transfer both stations back to auto.
	BOP	Perform follow-up actions of H-3-2 as directed by SRO for SASS mismatch.

Op-Test No.: DAY-1 Scenario No.: 1 Event No.: 5 Page 5 of 9

Event Description: After RCS delta-Tc is returned to zero and during follow-up actions of H-3-2, a 1500 gpm RCS leak at RC-P-1A into containment ramped in over 100 seconds, causes significant loss of RCS inventory and high containment pressure and temperature. The loss of RCS inventory will result in an automatic reactor trip if not tripped manually on 1210-10 Pressurizer Level Guide, and automatic ESAS actuations.

Time	Position	Applicant's Actions or Behavior
	BOP/RO	Diagnose RCS leak into containment by the following indications: • Increased RB radiation levels and RMS alarms (C-1-1) • Decreasing pressurizer level and increasing RCS makeup flow • Decreasing makeup tank level • Increased RB temperatures and pressure
	RO	Operate makeup system in attempt to maintain pressurizer level: • Start MU-P-1A, DC-P-1A, and DR-P-1A • Open MU-V-217 to augment normal makeup line via MU-V-17
	BOP/RO	Based upon quickly degrading plant conditions and impending safety system actuations (RPS, ESAS) recommend manual reactor trip.
	RO	With pressurizer level decreasing below 150" and power >25%, implement 1210-10 Pressurizer Level Guide as follows: • Manually trip reactor • Manually initiate 1600# ESAS actuation

Op-Test No.: DAY-1 Scenario No.: 1 Event No.: 6 Page 6 of 9

Event Description: When the reactor trips, the main turbine fails to automatically trip and must be manually tripped per 1210-1.

Time	Position	Applicant's Actions or Behavior
	BOP	Recognize failure of main turbine to automatically trip when reactor trips, as indicated by lack of turbine trip indications: • No K-1-1 alarm • Turbine stop valves indicating open on CL
	BOP (CT)	**Monitor reactor power after reactor trip, and manually trip turbine after verifying reactor power less than 10%, per 1210-1.**
	BOP	Verify turbine tripped per 1210-1 by verifying turbine stop valves closed and generator and field breakers open.

Op-Test No.: DAY-1 Scenario No.: 1 Event No.: 7 Page 7 of 9

Event Description: When ESAS actuates manually or automatically due to RCS leak, MU-P-1C fails to automatically start, thus preventing B-train HPI flow when it is required. MU-P-1C must be manually started per 1210-1/1210-10.

Time	Position	Applicant's Actions or Behavior
	RO	Monitor ESAS component status on ESAS status panel (PCR) for proper response when manually or automatically actuated, in accordance with 1210-1, Safety System Status Verification.
	RO	Diagnose failure of MU-P-1C to automatically start on any ESAS signal – auto or manual, as indicated by its green breaker status lamp on above control switch and its amber lamp illuminated on ESAS status panel (PCR).
	RO	Manually start MU-P-1C using its control switch on CR, per 1210-1 and 1210-10.
	RO	Verify MU-P-1C starts by its status indications above its control switch and on ESAS status panel (PCR).
	RO	Verify B-train HPI flow exists as indicated on flow indications on CR.

Op-Test No.: DAY-1	Scenario No.: 1	Event No.: 8	Page 8 of 9

Event Description: RCS inventory loss due to leak results in loss of 25°F subcooled margin, and the crew must respond per 1210-2 and 1210-6 for the small break LOCA.

Time	Position	Applicant's Actions or Behavior
	BOP/RO	Diagnose loss of 25°F subcooled margin by the following indications: • Alarm G-1-8 • One or both Margin to Saturation meters on panel center left (PCL) indicate <25°F
	RO **(CT)**	**Perform 1210-2 immediate actions for loss of 25°F subcooled margin:** • **Secure RC-P-1B, RC-P-1C, and RC-P-1D using controls on CC** • **Verify HPI flow on all four HPI flow meters MU-FI-1126 and 1127 on CC, and MU-FI-1128 and 1129 on CR**
	BOP	Perform 1210-2 immediate actions for loss of 25°F subcooled margin: • Verify EF-P-1, EF-P-2A, and EF-P-2B start by indications of speed, breaker status, and discharge pressures on CL and CC • Verify EFW flow to both SG's as indicated on EF-FI-779/788 for A-SG and EF-FI-782/791 for B-SG • Verify SG levels increasing toward 75-85% on operating range level indications LI-1103 for A-SG and LI-1105 for B-SG
	BOP	When required as indicated by SG pressure response to EFW flow, throttle EFW per 1210-10 EFW Throttling Criteria as follows: • Transfer EF-V-30A, 30B, 30C, and 30D controllers to manual • Operate EF-V-30A/D and EF-V-30B/C as necessary to throttle EFW flow to each SG • Ensure that both SG levels are still increasing toward 75-85%
	BOP	Feed and steam both steam generators as necessary to maintain them as heat sinks per 1210-6, and attempt to develop RCS natural circulation per 1210-10.

Op-Test No.: DAY-1 Scenario No.: 1 Event No.: 8 (cont.) Page 9 of 9

Event Description: RCS inventory loss due to leak results in loss of 25°F subcooled margin, and the crew must respond per 1210-2 and 1210-6 for the small break LOCA. ESAS signals must be cleared and HPI throttled per 1210-10, HPI Throttling Criteria.

Time	Position	Applicant's Actions or Behavior
	BOP/RO	When authorized by SRO to clear ESAS signals for throttling HPI: • Bypass 1600# auto channels (3) on A and B trains per 1105-3 • Defeat 4# auto channels (2/3) on A and B trains per 1105-3 • Defeat and reset 1600# manual channels (3) on A and B trains per 1105-3
	RO (CT)	**When directed to throttle HPI for PTS concerns per 1210-10, throttle HPI per 1210-10 HPI Throttling Criteria as follows:** • **Verify at least 25°F subcooled margin has been regained as indicated by Avg. of five highest incores (PPC point C4006)** • **Operate MU-V-16A, 16B, 16C, and 16D as necessary to control HPI flows** • **Reopen MU-V-36 and MU-V-37 (HPI minimum recirc valves) when HPI is manually throttled below 400 gpm/pump, as indicated on MU-FI-1126 and 1127 on CC for MU-P-1A, and MU-FI-1128 and 1129 on CR for MU-P-1C**
	BOP/RO	Perform follow-up actions of 1210-6 as directed by the SRO for the small break LOCA cooldown.
		(Scenario terminated after RCS pressure and temperature are under control for the small break LOCA coodown per 1210-6)

Facility: TMI Scenario No. 2 (80 minutes) Op-Test No.: DAY-1

Examiners: _____ Operators: _____

Objectives: To evaluate applicants' ability to: synchronize and load turbine/generator per 1106-1, and continue plant startup per 1102-2; respond to an OTSG tube leak per 1210-5; perform a plant and reactor shutdown per 1210-5 and 1102-10; respond to a makeup pump trip per alarm response; respond to a failed pressurizer level transmitter per 1202-29; respond to a turbine bypass valve failure after turbine trip; and reduce subcooled margin per 1210-5 with failure of the pressurizer spray valve to open.

Initial Conditions: IC12, 14% reactor power, 300 EFPD, during a xenon-free plant startup with main turbine hot at 1800 rpm, ready to synchronize and load. MFW pump on MS.

Turnover: Reactor is at 14% power during a xenon-free plant startup at 300 EFPD, with main turbine hot at 1800 rpm, ready to synchronize and load. The plant tripped 80 hours ago due to a main generator relay failure. Continue plant startup by synchronizing and loading turbine-generator and increasing power per 1102-2. MFW pump and gland steam on MS.

Event No.	Action No.	Event Type*	Event Description
1	N/A	N (BOP)	Synchronize and load turbine generator per 1106-1.
2	N/A	R (BOP)	Increase reactor power per 1102-2 and place turbine in auto.
3	MS01A	I (BOP)	Selected turbine header pressure instrument fails low with main turbine in automatic. (0% severity over 20 seconds)
4	TH16A	M (ALL)	Tube Leak on A-OTSG; 0.3% severity (45 gpm)
5	N/A	R (RO)	Plant & reactor shutdown per 1210-5 & 1102-10.
6	MS09D	C (BOP)	MS-V-3D (turbine bypass valve) fails open after turbine trip. Event Trigger: TC:TRIP
7	RC04A	I (RO)	Selected PZR level fails high; 0% severity over 600 seconds.
8	MU01A	C (RO)	MU-P-1A trips after start. Event trigger: MUPDISA>1000.
9	**DIOR	C (RO)	RC-V-1 does not open to reduce RCS subcooled margin per 1210-5; must use PZR vent and/or PORV. **02A5S06-ZDIPBORCV1 OPN CC RC-V-1 OPEN PB

* (N)ormal, (R)eactivity, (I)nstrument, (C)omponent, (M)ajor

Op-Test No.: DAY-1 Scenario No.: 2 Event No.: 1 Page 1 of 9

Event Description: As directed by SRO, excite, synchronize, and load main turbine-generator to minimum load per 1106-1.

Time	Position	Applicant's Actions or Behavior
	BOP	Operate main generator excitation controls on CL to establish main generator voltage per 1106-1.
	RO	Operate ICS Reactor Demand station as necessary to maintain reactor power per 1102-2.
	BOP	Operate Digital Turbine Control System (DTCS), main generator breakers, and main generator voltage controls on CL, to synchronize and load main generator to minimum load (40MW) per 1106-1.

Op-Test No.: DAY-1 Scenario No.: 2 Event No.: 2 Page 2 of 9

Event Description: After turbine-generator is loaded, increase reactor power to obtain T-ave of 579°F (23% power), transfer Reactor Demand and SG/Rx Demand stations to auto, and place main turbine in auto per 1102-2.

Time	Position	Applicant's Actions or Behavior
	BOP	Operate Reactor Demand ICS station to increase reactor power within MMR's (< 30%per hour) until T-ave = 579°F per 1102-2.
	RO	Operate RCS makeup system and LWDS controls to maintain pressurizer level increase per Figure 1 of 1102-2, as reactor power and RCS T-ave increase.
	BOP	Transfer Reactor Demand station to auto at 579°F T-ave per 1102-2.
	BOP	Increase demand on SG/Rx Master until it has reactor control, then transfer SG/Rx Master to auto per 1102-2.
	BOP	Operate ICS main turbine control station to increase main turbine-generator load until turbine bypass valves (MS-V-3's) indicate closed, and transfer main turbine to auto per 1102-2.

Op-Test No.: DAY-1 Scenario No.: 2 Event No.: 3 Page 3 of 9

Event Description: After main turbine is in auto, selected main turbine header pressure instrument (MS-10A-PT1) fails low (600 psig) over 30 seconds, causing SASS mismatch. The main turbine control valves initially close in automatic response to the instrument failure. The turbine will automatically transfer to manual on high header pressure error. OTSG pressures will increase and turbine bypass valves (MS-V-3's) may eventually open as required at 960 psig.

Time	Position	Applicant's Actions or Behavior
	BOP	Respond to SASS Mismatch alarm (H-3-2) and diagnose mismatch on turbine header pressure instrument on CC.
	BOP	Diagnose main turbine transfer to manual by alarm H-3-3 and indications on ICS turbine control station (red and white lamps on).
	BOP	Assume hand control of turbine at ICS station to control header pressure and return it to 885 psig per H-3-3.
	RO	Respond to OTSG pressure transient effects on RCS temperature, pressure, inventory, and reactor power. • Verify automatic response of pressurizer spray valve, RC-V-1.
	BOP	Select good turbine header pressure instrument per H-3-2.
	BOP	Transfer main turbine back to auto at ICS station with zero header pressure error and turbine bypass valves are closed if open in response to OTSG pressure increase.
	BOP	Perform follow-up actions of H-3-2 as directed by SRO.

Op-Test No.: DAY-1 Scenario No.: 2 Event No.: 4 Page 4 of 9

Event Description: After main turbine is back in auto and during H-3-2 follow-up actions, a primary to secondary tube leak of 45 gpm develops on A-OTSG. The team must respond to excessive radiation levels per 1202-12, and to the tube leakage per 1210-5 and alarm response procedures. A plant shutdown will be performed to comply with 1210-5 and Tech. Specs (Event 4).

Time	Position	Applicant's Actions or Behavior
	BOP/RO	Recognize indications of the tube leak on the A-SG: • high radiation alarm (C-1-1) due to alarms on condenser off-gas monitors RM-A-5 & 15, and A-SG steam line monitor RM-G-26 • increase in RCS makeup flow and decrease in makeup tank level
	BOP/RO	Respond to excessive radiation levels per 1202-12: • Announce radiation alarms on plant page & radio • Mark meteorological and radiation monitor charts • Contact Group Rad Con Supervisor (GRCS)
	RO	Perform actions of alarm response C-1-1 to validate tube leak, and implement 1210-5.
	RO	May close MU-V-3 per 1210-5 to isolate RCS letdown if deemed necessary to maintain pressurizer level.

Op-Test No.: DAY-1	Scenario No.: 2	Event No.: 5	Page 5 of 9

Event Description: Operation of ICS and CRD controls to effect plant and reactor shutdown per 1210-5 and 1210-1.

Time	Position	Applicant's Actions or Behavior
	RO (CT)	**Effect plant shutdown by performing the following per 1210-5:** • **Reduce Unit Load Demand until OTSG's reach low level limits** • **Transfer SG/Rx Demand, Reactor Demand, and CRD stations to manual** • **Operate CRD system to reduce reactor power at rate specified by SRO**
	RO	Operate RCS makeup system and LWDS as necessary to maintain RCS inventory during the reactor power and T-ave reduction.
	BOP	Operate FW-P-1A ICS station in hand as necessary to maintain MFW valve delta-p per 1102-10.
	BOP	Secure main turbine at <15% power per 1210-5 as follows: • Transfer main turbine ICS station to hand • Unload turbine-generator to zero (0) MW • Trip main turbine
	RO	Operate the control rod drive system as necessary to reduce reactor power until T-ave = 545°F per 1210-5.
	BOP	Transfer turbine bypass valve stations to hand prior to reactor trip.
	RO	Manually trip reactor per 1210-5.
	BOP	Operate turbine bypass valve stations in hand to stabilize OTSG pressures and prevent MSSV lift per 1210-5.
	BOP/RO	Perform immediate actions of 1210-1 for the reactor trip.

Op-Test No.: DAY-1 Scenario No.: 2 Event No.: 6 Page 6 of 9

Event Description: When main turbine is manually tripped at 15% power per 1210-5, MS-V-3D (turbine bypass valve) on A-SG fails open and must be isolated per 1210-3.

Time	Position	Applicant's Actions or Behavior
	BOP	Verify turbine bypass valves open and control SG pressures after main turbine is tripped.
	BOP	May recognize reduced or lower demand on ICS station for MS-V-3D/E/F as compared to demand for MS-V-3A/B/C on B-SG.
	BOP	As reactor power is reduced or after reactor is tripped per 1210-5, recognize failure of MS-V-3D by: • zero (0) demand on ICS station for MS-V-3D/E/F • red open indication for MS-V-3D • A-SG pressure decreasing below desired pressure
	BOP (CT)	**Direct AO over page or radio to locally isolate or manually close MS-V-3D.**
	BOP (CT)	**Operate MS-V-3D/E/F ICS station as necessary to reassume A-SG pressure control at desired pressure.**

Op-Test No.: DAY-1 Scenario No.: 2 Event No.: 7 Page 7 of 9

Event Description: At 10% power during the plant shutdown, selected pressurizer level transmitter, RC1-LT1, fails to 400" indicated level (over 10 minutes), causing closure of MU-V-17 if in automatic as false level increases above pressurizer level setpoint.

Time	Position	Applicant's Actions or Behavior
	RO	Diagnose decreasing makeup flow to RCS and increasing makeup tank level, due to decreasing demand on MU-V-17.
	RO	Recognize increase in pressurizer level on RC1-LT1, with decrease in pressurizer level on RC-LI-777A.
	RO	Diagnose probable failure of RC1-LT1 by conflicting indications of: • Increase in RC1-LT1 level with decreasing RCS temperature and loss of RCS inventory due to tube leak • Increase in RC1-LT1 level with decrease on RC-LI-777A level
	RO	Respond to failure of RC1-LT1 per 1202-29 as follows: • Assume hand control of MU-V-17 and adjust demand (open) as necessary to maintain required RCS inventory • Select alternate pressurizer level and temperature instruments • May close MU-V-3 to isolate RCS letdown if not already closed
	RO	May transfer MU-V-17 back to automatic at appropriate pressurizer level setpoint per 1210-5.

Op-Test No.: DAY-1 Scenario No.: 2 Event No.: 8 Page 8 of 9

Event Description: When MU-P-1A is manually started for augmented RCS makeup during plant shutdown or after reactor is tripped, MU-P-1A trips, thus reducing normal makeup capability.

Time	Position	Applicant's Actions or Behavior
	RO	Start MU-P-1A, DC-P-1A, and DR-P-1A when necessary for augmented RCS makeup flow to maintain RCS inventory, or as required for reactor trip response per 1210-1.
	RO	Diagnose MU-P-1A trip by the following alarms and indications: • Alarms B-1-2 and B-2-2 • Green and amber lamps for MU-P-1A breaker status • Zero (0) amps indicated for MU-P-1A motor
	RO	Start MU-P-1C, DC-P-1B, and DR-P-1B; and open MU-V16C/D as necessary for additional RCS makeup to maintain pressurizer level per 1210-1.

Op-Test No.: DAY-1 Scenario No.: 2 Event No.: 9 Page 9 of 9

Event Description: Pressurizer spray valve, RC-V-1, will not manually open when required by 1210-5 to reduce RCS pressure and subcooled margin, requiring use of pressurizer vent and/or PORV to reduce RCS presssure.

Time	Position	Applicant's Actions or Behavior
	RO	When directed by SRO per 1210-5 follow-up actions, perform the following actions to minimize RCS subcooled margin: • secure pressurizer heaters • transfer to manual and open pressurizer spray valve, RC-V-1
	RO	Diagnose failure of RC-V-1 to open by no open (red) indication when open pushbutton is depressed with RC-V-1 mode switch in manual.
	RO (CT)	**Operate pressurizer vent (RC-V-44 and RC-V-28) and/or PORV (RC-V-2) as directed by SRO to minimize RCS subcooled margin.**
	BOP/RO	Bypass ESAS 1600# channels when directed by SRO per 1210-5.
		(scenario is terminated after RCS subcooled margin is minimized and crew commences plant cooldown per 1210-5)

Facility: TMI Scenario No. 3 (70 minutes) Op-Test No.: DAY-2

Examiners: _____ Operators: _____

Objectives: To evaluate the applicants' ability to: swap operating makeup pumps per 1104-2; respond to a makeup system leak per alarm responses; perform a plant shutdown per 1102-10; secure a MFW pump per 1106-3; respond to a turbine trip while less than ARTS per K-1-1; respond to a main steam line break and excessive primary to secondary heat transfer per 1210-3; and stabilize plant following termination of excessive primary to secondary heat transfer per 1210-3.

Initial Conditions: IC16 (100% power MOC), IA-P-4 out of service, IA-P-1A running in hand.

Turnover: Plant at 100% power, MOC, IA-P-4 out of service, IA-P-1A running in hand. MU-P-1B must be removed from service for an oil system inspection – expected duration is two hours. DCCW loop-A will be sampled while running.

Event No.	Action No.	Event Type*	Event Description
1	N/A	N (RO)	Operating makeup pumps are swapped per 1104-2.
2	MU14 AOR**	C (RO) I (RO) R (RO) N (BOP)	Makeup system leak (50%=50 gpm) downstream of makeup valve, and low range makeup flow transmitter, MU-FT-24A, fails low. The makeup system leak requires normal makeup line isolation and management will order plant shutdown. **02A3M06-ZAOMU24FI FLO (0% with 120 second delay)
3	FW06B	N (BOP) I (BOP)	As FW-P-1A is removed from service per 1102-10/1106-3, the selected B-train MFW valve d/p transmitter, SP11B-DPT2 fails low (0% severity over 15 seconds) Trigger = FWFDFWP(1)<416
4	EG03 MS03A	M (ALL)	Main generator and turbine trips at about 40% power, and a main steam line break on A-SG occurs outside containment (100% severity ramped in over 300 seconds).
5	FW13A MS10, SGA, TRN B	C (BOP)	FW-V-5A breaker trips as it is commanded to close, causing main feedwater block valve to be failed 95% open. And, HSPS isolation of FW-V-16A and 17A (train-A) on low SG pressure will fail to actuate. Trigger = FWVFWV5A<0.95
6	DOR***	C (RO)	MU-V-16C will not close by pushbutton on panel when required to secure HPI. ***03A4S35-ZDIPBCMUV16C ON CR MU-V-16C CLOSE PUSHBUT

* (N)ormal, (R)eactivity, (I)nstrument, (C)omponent, (M)ajor

ORIGINAL

Op-Test No.: DAY-2 Scenario No.: 3 Event No.: 1 Page 1 of 6

Event Description: When directed by the SRO, operating makeup pumps are swapped from MU-P-1B to MU-P-1A per 1104-2 and the On-line Risk Document. MU-P-1B is then secured for inspection.

Time	Position	Applicant's Actions or Behavior
	RO	Performs actions of 1104-2 as directed by SRO as follows:
		• Starts DC-P-1A
		• Starts DR-P-1A
		• Starts MU-P-1A
		• Monitors makeup and seal injection parameters for stability
		• Secures MU-P-1B
	RO	Starts IC-P-1B and secures IC-P-1A per On-line Risk Document

ORIGINAL

Op-Test No.: DAY-2 Scenario No.: 3 Event No.: 2 Page 2 of 6

Event Description: After MU-P-1B is secured, a makeup system leak (50 gpm initially) develops between the normal makeup control valve (MU-V-17) and containment isolation valve (MU-V-18). Shortly after leak begins, the low range makeup flow transmitter (MU-FT-24A) fails low. The makeup system leak must be isolated by closing MU-V-17. Following time compression (1 hour), plant management will order a plant shutdown to repair leak.

Time	Position	Applicant's Actions or Behavior
	RO	Diagnose symptoms of primary leak into Auxiliary Building by: • Pressurizer level decrease and MU-V-17 demand increase • Makeup flow increase and possibly D-3-1 alarm • Makeup tank level and pressure decrease with alarms • Auxiliary Building sump level increase and LWDS-1-1 alarm • Report by primary auxiliary operator
	RO	Operate LWDS and makeup systems to establish feed to makeup tank from selected RC bleed tank, per 1104-2 and D-3-2.
	RO	Recognize failure of MU-FT-24A by indication on meter dropping to zero with flow still indicated on wide range MU-FT-24B.
	RO	Close MU-V-3 per D-1-3 to isolate RCS letdown and conserve PZR level. Operate NR-V-15A and 15B to control ICCW system temperature when letdown is isolated.
	RO (CT)	**Operate makeup system valves (MU-V-17, MU-V-18) as directed the by SRO to isolate the leak.**
	RO	Operate MU-V-16A or MU-V-16B as needed to restore and maintain normal pressurizer level (220").
	RO	Commence plant shutdown per 1102-10 as directed by SRO: • Operate makeup system components as directed • Set ULD rate of change at 3-5% per minute (30-50%) • Reduce ULD input to initiate plant power reduction
	RO/BOP	Monitor critical parameters during power reduction.
	BOP	Secure moisture separator drain pumps as directed by SRO.
	RO	Stop power reduction and stabilize plant at approx. 40% power to secure FW-P-1A and HD-P-1C.

Op-Test No.: DAY-2 Scenario No.: 3 Event No.: 3 Page 3 of 6

Event Description: When reactor power is approximately 40% per 1102-10, FW-P-1A is removed from service per 1106-3. As speed and flow are reduced on FW-P-1A (less than 1.5E6 lbm/hr), selected B-train MFW valve d/p transmitter (SP11B-DPT2) fails low over 15 seconds and causes SASS mismatch. FW-P-1B will automatically respond to false low MFW valve d/p by increasing in speed and flow.

Time	Position	Applicant's Actions or Behavior
	BOP	Perform actions to secure FW-P-1A per 1106-3 as directed: • Transfer FW-P-1A ICS station to hand • Slowly reduce ICS demand to reduce pump speed and flow • Monitor FW-P-1B and verify proper auto response
	BOP	Diagnose decreasing or failed B-train MFW valve d/p as follows: • Indication on SP11B-DPT2 decreasing to zero • SASS mismatch alarm H-3-2 • SASS mismatch lamps on SP11B-DPT1 & 2 • Low MFW valve d/p alarm M-1-5 • Increase in speed and pressure on MFW pump in auto
	RO	Monitor primary critical parameters response to effects of MFW flow transient (lower T-ave, PZR level, pressure).
	RO	Operate MU-V-16A/B as necessary to maintain PZR level. Verify proper operation of PZR heaters and spray.
	BOP	Respond to failed instrument per H-3-2 as follows: • Transfer FW-P-1B ICS station to hand • Adjust loaded FW-P-1B demand to stabilize MFW flows • Select alternate B-train MFW valve d/p, SP11B-DPT1 • Verify SP11B-DPT1 reads as expected
	BOP	Perform follow-up actions of H-3-2 as directed by SRO.

Op-Test No.: DAY-2 Scenario No.: 3 Event No.: 4 Page 4 of 6

Event Description: During follow-up actions of H-3-2 for the FW valve d/p mismatch, the main turbine-generator trips below ARTS (at 35 – 40% power) due to generator excitation relay failure, and a main steam line rupture occurs (ramped over 300 seconds) on A-SG outside containment. The reactor will most likely automatically trip on high or low RCS pressure, but may also be manually tripped due to plant instability.

Time	Position	Applicant's Actions or Behavior
	BOP/RO	Diagnose main turbine trip by K-1-1 and panel indications, with reactor power less than ARTS (45%).
	BOP/RO	Respond to the turbine trip without reactor trip per K-1-1 as follows: • Verify ICS trips to Track (H-2-2) • Monitor and verify reactor power is decreasing
	RO	Monitor and control RCS inventory and pressure control systems as necessary during RCS temperature increase.
	BOP	Recognize abnormal A-SG pressure response during power reduction and after reactor trip, by the following indications: • A-SG pressures indicate lower than B-SG • Demand on MS-V-3D/E/F ICS controller is lower than expected
	BOP/RO	Diagnose and respond to reactor trip per 1210-1.
	BOP	Verify MFW is under control per 1210-1, and recognize FW-V-5A has no lamps illuminated. (see Event No. 5 actions)
	RO	Start MU-P-1C, DC-P-1B, and DR-P-1B per 1210-1 (2nd makeup pump), and operate MU-V-16A/B/C/D as necessary to maintain pressurizer level above 80".
	BOP/RO	Diagnose excessive primary to secondary heat transfer causing abnormally low RCS temperature and pressure.
	RO	Respond to RCS shrink due to excessive cooling as follows: • Open MU-V-16A/B/C/D as necessary to maintain PZR level above 80 inches • Manually initiate full HPI if PZR level drops below 20 inches per 1210-1, or verify 1600# ESAS actuation per 1210-10

ORIGINAL

Op-Test No.: DAY-2 Scenario No.: 3 Event No.: 5 Page 5 of 6

Event Description: When the reactor trips and during A-SG blowdown, the breaker for FW-V-5A trips the valve stops at 95% open; and HSPS train-B low SG pressure actuation will not automatically occur at less than 600 psig to close FW-V-16A and 17A. This combination of failures requires operator action to manually isolate MFW to A-SG, in addition to manually isolating EFW to A-SG to terminate the excessive primary to secondary heat transfer per 1210-3.

Time	Position	Applicant's Actions or Behavior
	BOP (CT)	**Perform actions to isolate MFW to A-SG per 1210-1 and 1210-3:** • **Manually close or verify closed FW-V-17A, FW-V-16A, and FW-V-92A; recognize FW-V-5A breaker tripped** • **Control or trip MFW pumps if necessary**
	BOP (CT)	Perform actions to isolate A-SG completely per 1210-3 as follows: • Close or verify closed MS-V-3D/E/F and MS-V-4A • Close MS-V-1A and 1B • Close MS-V-2A • **Transfer to manual and close EF-V-30A and EF-V-30D**
	BOP	Perform actions necessary to control RCS temperatures as directed by SRO after A-SG blows dry and excessive heat transfer stops: • Transfer MS-V-3A/B/C to hand or adjust turbine header pressure setpoint as required, to steam B-SG and control RCS T-colds • Provide main or emergency feedwater to B-SG as required to maintain sufficient level for heat transfer (25" start-up level)
	BOP	Perform applicable follow-up actions of 1210-3 as directed by SRO.

Op-Test No.: DAY-2 Scenario No.: 3 Event No.: 6 Page 6 of 6

Event Description: When it becomes necessary after the excessive cooling is terminated, the RO throttles or terminates HPI flow to the RCS to minimize the RCS re-pressurization, but MU-V-16C will not close on demand by its pushbutton on CR. The alternative is to secure MU-P-1C. ESAS signals must be bypassed or defeated as necessary to control ESAS components.

Time	Position	Applicant's Actions or Behavior
	RO/BOP	Bypass/defeat/reset all three ESAS channels on both trains when directed by SRO.
	RO (CT)	**Operate makeup (HPI) system valves and pumps as necessary to control (terminate) HPI flow to RCS when directed by SRO:** • **Close MU-V-16A, 16B, 16C, and 16D as necessary** • **Recognize MU-V-16C failure to close on demand** • **Secure MU-P-1C to terminate B-train HPI flow**
	RO	Perform applicable follow-up actions of 1210-3 as directed by SRO
	RO	Operate MU-V-16A/16B as necessary to maintain stable pressurizer level during recovery actions of 1210-3.
		(scenario is terminated when 1210-3 follow-up actions direct crew back to 1210-1)

Facility: TMI Scenario No. 4 (70 minutes) Op-Test No.: DAY-2

Examiners: _____ Operators: _____

Objectives: To evaluate the applicants' ability to: manually increase reactor power per 1102-2; transfer MFW pump steam supplies per 1106-3; respond to a loss of RC makeup and seal injection per 1203-15; respond to a loss of main feedwater per alarm responses; respond to an EFW actuation failure per 1210-10; respond to a SG tube rupture per 1210-5; and respond to a loss of 25°F subcooled margin per 1210-2.

Initial Conditions: IC08, reactor critical at 1E-8 amps during a plant startup at MOC. All operating ventilation fans transferred to A-train.

Turnover: Reactor is critical at 1E-8 amps during a plant startup at MOC. Critical data has been obtained and 1103-8 has been closed out. FW-P-1A and gland steam is currently supplied from the auxiliary steam system. B-RCBT is on sample recirc.

Event No.	Action No.	Event Type*	Event Description
1	NI19A	R (RO) I (RO)	Reactor power is increased to 5% power using CRD panel in accordance with 1102-2. NI-5 (selected power range NI) will not increase above 0% as reactor power is increased into power range flux level.
2	MSR19	N (BOP)	FW-P-1A is transferred from auxiliary steam to main steam per 1106-3 prior to 5% reactor power per 1102-2.
3	RC23A	I (BOP)	At ≈5% power, selected B-SG startup level transmitter (LT-1054) fails low (0% over 300 seconds), causing FW-V-16B to open in auto.
4	ED02D	C (RO)	1A auxiliary transformer trips, causing trip of MU-P-1B and loss of RC makeup/seal injection.
5	DOR** ICR03	C (BOP) C (BOP)	FW-P-1A speed control fault causes loss of main feedwater. **01A5S07-ZDIMSCA(3) SLOLO FW-P-1A MSC SWITCH EF-V-30B/C do not automatically open for EFW to B-SG.
6	TH15B DOR***	M (ALL) C (RO)	A tube rupture occurs on B-SG that results in loss of 25°F subcooled margin. (20% severity over 100 seconds) RC-P-1B does not trip using its normal control switch. ***02A3S16-ZDICSRCP1B(1) PTL RC-P-1B CS, and 02A3S16-ZDICSRCP1B(2) STP RC-P-1B CS

* (N)ormal, (R)eactivity, (I)nstrument, (C)omponent, (M)ajor

ORIGINAL

Op-Test No.: DAY-2 Scenario No.: 4 Event No.: 1 Page 1 of 7

Event Description: When directed by SRO, reactor power is increased above point of adding heat and into power range, but power range detector NI-5 does not come on scale due to latent failure of its summer amplifier.

Time	Position	Applicant's Actions or Behavior
	RO	Raise reactor power to 5% per 1102-2: • Operate CRD panel to withdraw control rods • Monitor nuclear instrumentation • Monitor and control RCS critical parameters • Monitor rate of power increase and comply with mechanical maneuvering recommendations (Enclosure 4)
	RO	Recognize failure of NI-5 to come on scale as compared to NI-6, 7, 8: • Inform SRO • Recognize and flag Tech. Spec. concern • Select NI-6 as controlling NI to ICS using SASS selector pushbutton, prior to transferring CRD panel to auto at 5% power

	RO	Control RCS inventory during power and T-ave increase per 1102-2:
		• Monitor and control pressurizer level per Figure 1
		  • Operate MU-V-17 control station setpoint
		• Monitor and control makeup tank level per Figure 1 of 1104-2
		  • Operate MU-V-8 and LWDS panel controls to bleed

	BOP	Monitor secondary critical parameters during reactor power increase: • Verify automatic response of MS-V-3s to control SG pressures • Verify automatic response of FW-V-16s to control SG levels • Operate FW-P-1A ICS station to maintain FW vlv d/p per 1106-3
	BOP	Place A-RPS channel in manual bypass if directed by SRO.

Op-Test No.: DAY-2 Scenario No.: 4 Event No.: 2 Page 2 of 7

Event Description: After reaching point of adding heat and prior to 5% reactor power, FW-P-1A turbine steam supply is transferred from auxiliary to main steam.

Time	Position	Applicant's Actions or Behavior
	BOP	Transfer FW-P-1A steam supply per 1106-3 prior to 5% power: • Direct auxiliary operator to operate AS-V-5A in plant • Monitor FW valve d/p and FW-P-1A control valve positions • Operate FW-P-1A ICS station demand as necessary to maintain FW valve d/p above 70#

Op-Test No.: DAY-2 Scenario No.: 4 Event No.: 3 Page 3 of 7

Event Description: After FW-P-1A is on main steam and at ≈5% reactor power, selected B-SG startup level transmitter (LT-1054) fails low over 300 seconds, causing FW-V-16B to open in auto and eventually a SASS mismatch alarm.

Time	Position	Applicant's Actions or Behavior
	BOP	Recognize increase in B-SG feed flow and startup level by panel indications.
	BOP	Recognize increase in FW-V-16B demand and position indication.
	RO	Monitor RCS critical parameters and respond to increased RCS heat removal: • Verify automatic pressurizer level control by MU-V-17 • Verify automatic RCS pressure control by pressurizer heaters
	BOP	Transfer FW-V-16B to hand and control demand as necessary to return B-SG feed flow and level to normal.
	BOP	Acknowledge SASS mismatch alarm H-3-2 due to B-SG startup level, and recognize failing B-SG startup level on recorder.
	BOP	Select alternate B-SG startup level transmitter using SASS pushbutton per H-3-2.
	BOP	Check error across FW-V-16B controller and transfer FW-V-16B back to auto when its error is zero (0).
	BOP	Perform follow-up actions of H-3-2 as directed by SRO.

ORIGINAL

Op-Test No.: DAY-2 Scenario No.: 4 Event No.: 4 Page 4 of 7

Event Description: After FW-V-16B is back in auto, the 1A auxiliary transformer trips due to failed fault pressure switch, causing: loss of 230KV bus-8, fast transfer of BOP buses, under-voltage on 1E 4160V ES bus, and trip of numerous B-train components including MU-P-1B. MU-P-1B trip results in loss of RC makeup and RCP seal injection. EG-Y-1B starts and re-energizes 1E 4160V ES bus.

Time	Position	Applicant's Actions or Behavior
	ALL	Recognize loss of 230KV bus-8 and 1E 4160V bus undervoltage by alarms and panel indications.
	RO	Verify by panel indications and overhead lights in control room that EG-Y-1B starts and re-energizes 1E 4160V bus.
	RO	Recognize MU-P-1B trip causing loss of RC makeup/seal injection and respond per 1203-15: • Transfer MU-V-32 (seal injection flow control valve) control station on CC to hand and reduce demand to zero to close valve • Start MU-P-1A, DC-P-1A, and DR-P-1A using controls on CC • Reopen MU-V-32 by increasing its controller demand to obtain 38 gpm seal injection flow on MU42-FI • Transfer MU-V-32 controller back to auto with zero error
	BOP	Recognize trip of SR-P-1B, and respond per 1203-19: • start SR-P-1B or 1C using its control on CL
	RO	Recognize trip of NR-P-1C and NS-P-1C, and respond per 1202-38 and 1203-20: • Verify auto start of NR-P-1B by its breaker status on CR • Verify auto start of NS-P-1B by its breaker status on CC
	ALL	Perform follow-up actions of procedures as directed by SRO for the loss of 230KV bus-8 and 1E 4160V bus under-voltage.

ORIGINAL

Op-Test No.: DAY-2 Scenario No.: 4 Event No.: 5 Page 5 of 7

Event Description: After all immediate actions are complete for loss of 1A transformer, an electrical short in FW-P-1A motor speed changer (MSC) causes uncontrollable FW-P-1A speed reduction to zero and loss of main feedwater to SGs. EFW will automatically actuate at less than 10" on either SG, but a relay failure will prevent auto B-SG level control by EF-V-30B and 30C.

Time	Position	Applicant's Actions or Behavior
	BOP	Diagnose FW-P-1A problem and loss of MFW flow by the following: • Low feedwater valve d/p alarm M-1-5 • Decreasing speed and discharge pressure on FW-P-1A (CL) • Decreasing SG levels (CC) and alarms J-2-3 and J-2-4
	RO	Respond to reduced heat transfer as follows: • Monitor increase in RCS temperature and pressure • Verify automatic response of pressurizer spray, RC-V-1 (CC) • Transfer RC-V-1 to MAN and open fully per G-3-8 • Transfer RC-V-1 back to auto
	BOP	Respond to EFW actuation per 1210-10 as follows: • Verify EF-P-2A, 2B and EF-P-1 start (CL & CC) • Verify EF-P-2A, 2B and EF-P-1 discharge pressure (CC) is greater than SG pressure • Verify EF-V-30A/D and EF-V-30B/C open as required to provide EFW flow to both SGs (CL & CC)
	BOP (CT)	**Diagnose no EFW flow to B-SG (CC) and respond per 1210-10:** • **Transfer EF-V-30B and/or 30C controller to manual (CC)** • **Increase EF-V-30B/C demand to supply EFW flow to B-SG**
	RO	Manually trip reactor if directed by SRO, and perform immediate actions 1, 4, 5, 6, 7, 8, 9, 10, & 11 of 1210-1 (see attached 1210-1) • Start MU-P-1C, DC-P-1B, and DR-P-1B • Open MU-V-16C/D as necessary to maintain pressurizer > 40"
	BOP	If reactor tripped, perform immediate actions 2 and 3 of 1210-1.

ORIGINAL

Op-Test No.: DAY-2 Scenario No.: 4 Event No.: 6 Page 6 of 7

Event Description: When desired by examiner, multiple tubes rupture in B-SG (over 100 seconds) resulting in eventual loss of 25°F subcooled margin. RC-P-1B control switch will not function to secure pump when required per 1210-2.

Time	Position	Applicant's Actions or Behavior
	ALL	Diagnose primary to secondary leak in B-SG by the following: • Radiation monitor alarms (C-1-1) on RM-G-27, RM-A-5/15/5G hi • Rapid reduction in pressurizer level and RCS pressure • High normal makeup flow • Increase in B-SG level
	RO	Perform actions in response to low pressurizer level: • Open MU-V-217, MU-V-16A, MU-V-16B • Start MU-P-1C, DC-P-1B, DR-P-1B • Open MU-V-16C, MU-V-16D • Manually initiate full HPI (1600# ESAS – trains A & B) if pressurizer level drops to 20" after reactor trip
	RO	Verify or manually trip reactor, and perform immediate actions 1, 4, 5, 6, 7, 8, 9, 10, & 11 of 1210-1 (see attached 1210-1)
	BOP	When reactor trips, perform immediate actions 2 and 3 of 1210-1.
	BOP	Operate EF-V-30B/C as necessary to terminate EFW flow to B-SG as level increases due to tube rupture.

	RO (CT)	**Diagnose loss of 25°F subcooled margin by alarm G-1-8 and PCL indication, and respond per 1210-2:**
		• **Secure RC-P-1A, 1B, 1C, and 1D**
		• **Recognize failure of RC-P-1B control switch to secure pump, and de-energize 1B 6900V bus by opening breaker 1SB-02 on PR**
		• **Verify or manually initiate HPI (1600# ESAS) to obtain:**
		  • **MU-P-1A and 1C running**
		  • **MU-V-14A and 14B open**
		  • **MU-V-16A, 16B, 16C, and 16D open**
		  • **MU-V-3, 18, 36, and 37 closed**
		  • **Maximum HPI flow indicated on CC and CR**

	BOP	Respond to loss of 25°F subcooled margin per 1210-2: • Verify EF-V-30A/D respond in auto to provide EFW flow to A-SG and raise level towards 75-85%

ORIGINAL

Op-Test No.: DAY-2 Scenario No.: 4 Event No.: 6 (cont) Page 7 of 7

Event Description: Multiple tubes rupture in B-SG (over 100 seconds) resulting in eventual loss of 25°F subcooled margin. RC-P-1B control switch will not function to secure pump when required per 1210-2.

Time	Position	Applicant's Actions or Behavior
	RO/BOP	Verify immediate actions of 1210-1 and 1210-2 as led by SRO.
	RO	Perform follow-up actions of 1210-2 as directed by SRO: • Operate valves per step 2.2
	BOP	Operate EF-V-30A/D to throttle EFW to A-SG per 1210-10, while ensuring A-SG level increases toward required setpoint.
	BOP/RO	Perform follow-up actions of 1210-5 as directed by the SRO.
	BOP/RO	Bypass/defeat/reset ESAS channels on trains A and B as directed by SRO to allow HPI throttling.
	RO (CT)	**Throttle HPI per 1210-10 when directed by SRO:** • **Verify at least 25°F subcooled margin has been recovered** • **Operate MU-V-16A. 16B, 16C, and 16D as necessary to throttle HPI and control subcooled margin as directed by SRO, and prevent MSSV lift on B-SG at >1040 psig** • Reopen MU-V-36 and 37 if HPI is throttled below 400 gpm on either MU-P-1A or 1C.
	BOP	Operate EF-V-30A/D as necessary to raise A-SG level and provide sufficient EFW flow to promote RCS natural circulation.
	BOP	Secure EF-P-1 per 1210-5 follow-up actions when directed by SRO: • Defeat HSPS-EFW actuation signals • Close MS-V-13A and 13B to isolate main steam to EF-P-1
		(scenario is terminated when RCS pressure and temperature are under control and crew commences plant cooldown per 1210-5)

ORIGINAL

NRC RO OPERATIONAL
SIMULATOR SCENARIO No. 1

RC PUMP SEAL FAILURE, SMALL BREAK LOCA, & LOSS OF SUBCOOLED MARGIN

DEVELOPED BY/DATE: _____ 12/13/99

REVIEWED BY/DATE: _____ 12/15/99

APPROVED BY/DATE: _____ 12/15/99
(OPERATIONS TRAINING MANAGER)

NRC RO OPERATIONAL
SIMULATOR SCENARIO No. 1

SCENARIO CHANGE HISTORY PAGE

REVISION	DATE	REFERENCE TITLE	DESCRIPTION (Include AI # if appropriate)

NRC RO OPERATIONAL
SIMULATOR SCENARIO No. 1

1.0 GENERAL DESCRIPTION OF SCENARIO

Plant at 100% power, MOC, with RR-P-1A out of service, and the following ICS stations in HAND:

SG/Rx Master, both FW Loop Masters, all four FW Valve stations, both FW Pump stations, and Delta-Tc station.

ICS is returned to full automatic.

RC Pump seal injection flow transmitter causes MU-V-32 closure and loss of seal injection.

RC-P-1A experiences a #1 seal failure.

When RC-P-1A is secured, selected RCS Loop-A T-cold fails low.

A small break LOCA (1500 gpm) occurs at RC-P-1A.

The main turbine fails to automatically trip when reactor trips.

MU-P-1C fails to automatically start on ES actuation.

Loss of 25°F subcooled margin requires a small break LOCA cooldown.

Estimated scenario time - 70 minutes. **3 Critical Tasks**

2.0 REFERENCES

A. 10 CFR 55.45 Operating Tests, (a) Content (3), (4), (5), (6), (7), (8), (9), (12), (13)

B. PROCEDURES

1105-4	Integrated Control System
1203-15	Loss of RC Makeup/Seal Injection
1203-16	Reactor Coolant Pump and Motor Malfunction
1103-6	Reactor Coolant Pump Operation
1210-1	Reactor Trip (copies required for examiners)
1210-2	Loss of 25°F Subcooled Margin
1210-6	Small Break LOCA Cooldown
1210-10	Abnormal Transients Rules, Guides, and Graphs

Alarm Responses

NRC RO OPERATIONAL
SIMULATOR SCENARIO No. 1

3.0 TASKS

0150040101	Transfer ICS stations to automatic
0008210501	Respond to loss of RCP seal injection
0008180401	Respond to high RCP seal #1 leakoff
0158020401	Respond to a SASS mismatch/actuation
3418000101	Perform plant power changes
0030030101	Perform a normal reactor coolant pump shutdown
0150030101	Operate the ICS in hand
0000070501	Respond to a reactor trip as the primary CRO
0000080501*	**Respond to a reactor trip as the secondary CRO**
0130020101	Manually initiate the ESAS
0618000501	Respond to an emergency feedwater actuation
0008360501	Throttle emergency feedwater
000C190501*	**Respond to loss of 25°F subcooled margin**
000C230501	Respond to a small break LOCA
0130030101	Reset an ES channel
0130040101	Bypass or defeat an ES channel
004C040101*	**Throttle high pressure injection**

*** Critical Task**

NRC RO OPERATIONAL
SIMULATOR SCENARIO No. 1

4.0 SIMULATOR INITIALIZATION

A. IC16 100% power, steady-state, MOC.

Place simulation in RUN and perform the following:

1. Red tag RR-P-1A extension control on CC in pull-to-lock.
2. Place red sticker tag on RR-P-1A OPEN pushbutton on CC.
3. Verify or align 1C ES Valves MCC to the 1S Bus.
4. Transfer the following ICS stations to HAND:
   SG/Rx Master, both FW Loop Masters, all four FW Valves, both FW Pumps, and Delta-Tc
5. Reduce Delta-Tc station demand to zero (0).

B. EVENT TRIGGERS

#4 THA0427<5.0
Command: IMF RC08B 0 30

C. MALFUNCTIONS

MU07	MU-V-32 failure; insert at 0% severity over 10 second ramp on Event #2.
MU19A	RC-P-1A #1 seal failure; insert at 100% severity over 60 second ramp on Event #3.
TH06	LOCA at RC-P-1A; insert at 0.15% severity over 100 second ramp on Event #5.
TC02	Main Turbine auto trip failure; insert immediately.
MU23C	MU-P-1C auto start failure; insert immediately.

D. REMOTE FUNCTIONS

RWR07	RR-P-1A breaker; insert OUT immediately to rack out RR-P-1A breaker.
RWR24	RR-V-1A breaker; insert OPEN immediately to open RR-V-1A breaker.

E. OVERRIDES

02A3M05-ZAOMU42FI FLO MU-42FI; insert at 100% severity over 10 second ramp on Event #2.

F. MONITOR

Set MSK2609A = 14.7 immediately (auxiliary steam pressure).

NRC RO OPERATIONAL
SIMULATOR SCENARIO No. 1

5.0 SCENARIO PREVIEW

A. EXAMINER PREVIEW

Plant at 100% power, MOC, with RR-P-1A out of service and the following ICS stations in HAND: SG/Rx Master, both FW Loop Masters, all four FW Valves, both FW Pumps, and Delta-Tc. Delta-Tc demand is at zero (0) from previous maintenance on module.

1. Secondary CRO must return ICS to full automatic per 1105-4.
2. MU-FT-42, RCP Seal Injection flow fails high over 10 seconds, causing MU-V-32 to automatically close. Primary CRO must respond to the loss of RC Pump seal injection per 1203-15, by reopening MU-V-32 in HAND.
3. RC-P-1A #1 seal failure requires power to be reduced to less than 75% and pump to be secured per 1203-16.
4. When RC-P-1A is secured, RC5A-TE3 (selected RCS loop-A T-cold) fails low to 520°F over 30 seconds, causing SASS mismatch and high RCS delta-Tc. The secondary CRO must respond to the SASS mismatch per H-3-2 and control ICS feedwater loop masters to re-ratio main feedwater per 1203-16, then return FW loop masters back to AUTO.
5. A small break LOCA at RC-P-1A ramps in over 100 seconds, eventually resulting in an automatic reactor trip if not tripped manually per 1210-10 Pressurizer Level Guide. The CROs must respond to the increased RB radiation levels per C-1-1 and 1202-12, and to the reactor trip per 1210-1.
6. The main turbine will not automatically trip when the reactor trips, requiring the secondary CRO to manually trip the turbine per 1210-1 when reactor power is less than 10%. **(CT)**
7. MU-P-1C will not automatically start on any ESAS signal, requiring the primary CRO to manually start MU-P-1C per 1210-10.
8. 25°F subcooled margin is lost, requiring the primary CRO to secure remaining RC pumps per 1210-2 **(CT)**. The secondary CRO must verify EFW actuation and eventually throttle EFW flows per 1210-10. When subcooled margin is regained, ESAS signals must be cleared and the primary CRO must throttle HPI per 1210-10 for PTS concerns **(CT)**.
   A small break LOCA cooldown will be commenced per 1210-6.

NRC RO OPERATIONAL
SIMULATOR SCENARIO No. 1

B. SHIFT BRIEFING

1. Plant is at 100% power, steady-state, 300 EFPD.

2. RR-P-1A is out of service for shaft bearing replacement. It has been out of service 4 hours into its 16 hour estimated completion time. (See On-line Maintenance Risk Management document)

3. The following ICS stations are still in HAND following completed maintenance on the FW ratio and BTU limit circuits: SG/Rx Master, both FW Loop Masters, all four FW Valves, both FW Pumps, and Delta-Tc.

4. Orders for this shift include transferring ICS back to full automatic, and maintaining 100% power operation.

NRC RO OPERATIONAL
SIMULATOR SCENARIO No. 1

6.0 SEQUENCE OF EVENTS

Examiner Notes and Actions	Expected Operator Actions
♦ **ICO**: Initialize the simulator per Section 4.0.	
♦ **IPOI**: Assign team positions and conduct the SHIFT BRIEFING per Section 5.B.	♦ Assume assigned team positions.
♦ Allow crew 3-5 minutes to take turnover and assume the watch.	♦ Take turnover and review plant status. ♦ Assume the watch and inform examiner.
1. **SHIFT FOREMAN**: Direct secondary CRO to transfer ICS back to full automatic per 1105-4.	
NOTE: Delta-Tc station demand is initially at zero (0) as left following mantenance.	1.1 BOP - Reviews guidelines for returning ICS stations to AUTO per 1105-4, Appendix 7.
	1.2 BOP - Checks errors across all ICS stations in HAND, and recognizes error on FW loop masters.
	1.3 BOP - Raises Delta-Tc station demand to 50% to zero errors across FW loop masters.
	1.4 BOP - Transfers the ICS stations back to AUTO per 1105-4 in following order: a. FW-V-17A and 17B b. FW-V-16A and 16B c. FW Loop Masters A and B d. Delta-Tc e. FW-P-1A and 1B f. SG/Rx Master
	1.5 BOP - Verifies ICS Track alarm H-2-1 clears after SG/Rx Master is in AUTO.

NRC RO OPERATIONAL
SIMULATOR SCENARIO No. 1

Examiner Notes and Actions	Expected Operator Actions
2. **ICO**: Approximately one (1) minute after ICS is in full AUTO, or when directed by Examiner, activate EVENT #2 to cause MU-FT-42 failure high, and MU-V-32 to close in AUTO.	
	2.1 RO - Recognizes RCP seal injection flow transient by the following alarms and indications on CC: ◆ Alarms F-1-5, F-1-6 ◆ RC-18-DPI-1/2/4 off-scale low ◆ MU-42-FI1 indicates 80 gpm ◆ MU-V-32 station demand = zero (0)
NOTE: RCP total seal injection flow may still be monitored on PPC.	
	2.2 RO - Diagnoses actual loss of RCP seal injection caused by MU-V-32 closure.
SHIFT FOREMAN: After RO has diagnosed MU-V-32 closure as cause for loss of RCP seal injection, implement 1203-15 verify immediate actions, and direct follow-up actions.	
	2.3 RO - Transfers MU-V-32 station to HAND, and raises demand to restore RCP seal injection flow as directed by SRO per 1203-15.
	2.4 RO - Monitors RCP seal parameters (RC-18-DPI-1/2/4) and #1 seal water temperatures as seal injection is being restored.
	2.5 RO - Limits seal injection flow increase to limit cooldown rate on radial bearings to ≤1°F per minute per 1203-15.
	2.6 RO - Obtains approximately 38 gpm RCP seal injection flow as indicated on PPC, but leaves MU-V-32 in HAND until MU-FT-42 is fixed.

NRC RO OPERATIONAL
SIMULATOR SCENARIO No. 1

Examiner Notes and Actions	Expected Operator Actions
3. **ICO**: Approximately one (1) minute after RCP seal injection flow has been restored to normal, or when directed by Examiner, activate EVENT #3 to cause #1 seal failure on RC-P-1A.	3.1 RO - Diagnoses symptoms of RCP #1 seal failure on RC-P-1A by the following: ♦ Alarms F-1-6, F-1-4, F-1-3, D-2-2, and LWDS-1-5 (delayed) ♦ RC-18-DPI-1 (CC) off-scale low ♦ MU-13-DPI-1 (CC) goes low ♦ RC-P-1A seal leakoff flow high (>12 gpm) on PC recorder and PPC
	3.2 RO - Closes MU-V-33A by depressing its CLOSE pushbutton on CC within 5 minutes per 1203-16.
NOTE: When MU-V-33A is closed, alarm F-1-4 will clear and MU-13-DPI-1 (CC) will go high.	
	3.3 RO - Recognizes requirement to reduce power and secure RC-P-1A within 30 minutes per 1203-16.
SHIFT FOREMAN: Implement 1203-16 and direct **primary CRO** to reduce reactor power to 70% at 5% per minute per the manual actions.	
	3.4 RO - Sets ULD rate of change setpoint at 50 (5%/minute), and lowers ULD to approximately 60 (600 MW) to effect the power reduction.
	3.5 RO/BOP - Monitor critical parameters during the power reduction.
	3.6 RO/BOP - Verify that reactor power stabilizes at target power level (70%) and report to SF.
SHIFT FOREMAN: Direct **primary CRO** to secure RC-P-1A.	
	3.7 RO - Secures RC-P-1A using its control switch on CC per 1103-6.

NRC RO OPERATIONAL
SIMULATOR SCENARIO No. 1

Examiner Notes and Actions	Expected Operator Actions
4. **ICO**: When RC-P-1A is secured, verify EVENT #4 inserts RC08B at 0% severity over 30 seconds to fail RC5A-TE3.	4.1 BOP - Monitors for automatic ICS re-ratio of main feedwater when RC-P-1A is secured.
	4.2 BOP - Recognizes SASS mismatch on RCS loop-A T-cold by alarm H-3-2 and indication on CC.
	4.3 BOP - Acknowledges high delta-Tc alarm H-2-4 and sustained RCS delta-Tc on CC indicator.
	4.4 RO - Responds to RCS temperature and pressure transient by verifying proper automatic operation of pressurizer heaters (CR) and spray valve, RC-V-1 (CC).
	4.5 BOP - Responds to SASS mismatch per H-3-2: ♦ Transfers both FW Loop Masters to HAND ♦ Selects alternate RCS loop-A T-cold, RC5A-TE1 by depressing its SASS selector pushbutton on CC
SHIFT FOREMAN: After secondary CRO diagnoses and initially responds to the SASS mismatch, implement H-3-2 alarm response and verify/direct actions as necessary.	
	4.6 BOP - Adjusts ICS FW Loop Master demands (decreases A-loop & increases B-loop) as necessary to obtain zero (0) degrees delta-Tc, while maintaining correct total FW flow for reactor power.
EXAMINERS: If reactor trips due to improper FW control, proceed to Event #6.	

NRC RO OPERATIONAL
SIMULATOR SCENARIO No. 1

	Examiner Notes and Actions		Expected Operator Actions
	EXAMINERS: It is not necessary for FW Loop Masters to be returned to AUTO prior to proceeding with next Event #5.	4.7	BOP - After correct FW flows have been obtained, checks for zero (0) error across FW Loop Masters and transfers both stations back to AUTO.
		4.8	BOP - Performs follow-up actions of H-3-2 as directed by the SRO for the SASS mismatch.
5.	**ICO**: After RCS temperatures are stable with zero (0) delta-Tc, or when directed by Examiner, activate EVENT #5 to insert TH06 at 0.15% severity (1500 gpm) over 100 seconds.	5.1	RO/BOP - Diagnose RCS leak into containment by the following indications: ♦ Increased RB radiation levels (PRF) and RMS alarms (C-1-1) ♦ Decreasing pressurizer level (CC) ♦ Decreasing makeup tank level (CC) ♦ Increasing RB temperatures & pressures
		5.2	RO - Operates makeup system to provide more makeup flow to maintain pressurizer level: ♦ Starts MU-P-1A, DC-P-1A, and DR-P-1A using their control switches on CC ♦ Opens MU-V-217 using its pushbutton on CC to augment normal makeup line flow
		5.3	RO/BOP - Recommend reactor trip or manually trip reactor based upon quickly degrading plant conditions and impending safety system actuations (RPS,ESAS).
	SHIFT FOREMAN: If either CRO recommends or initiates manual reactor trip due to quickly degrading plant conditions, concur with their action or recommendation.		

NRC RO OPERATIONAL
SIMULATOR SCENARIO No. 1

	Examiner Notes and Actions		Expected Operator Actions
	NOTE: MU-P-1C will fail to automatically start on any ESAS actuation. See Event #7 for expected RO actions.	5.4	RO - With pressurizer level dropping below 150" and reactor power greater than 25%, implements 1210-10 Pressurizer Level Guide as follows: ♦ Manually trips reactor by depressing both trip pushbuttons on CC, and ♦ Manually initiates HPI by depressing 1600# or 4# manual ESAS pushbuttons for both trains on CC and CR
	EXAMINERS: Refer to copy of 1210-1.	5.5	RO/BOP - Perform immediate manual actions of 1210-1 for the reactor trip.
6.	NOTE: The main turbine will fail to automatically trip when reactor trips.	6.1	BOP - Recognizes failure of main turbine to automatically trip when reactor trips by: ♦ No K-1-1 alarm (Turbine Trip) ♦ Turbine stop valves open on CL
	NOTE: 6.2 is a Critical Task.	6.2	**BOP - Verifies reactor power is less than 10% on CC digital indicators, and manually trips main turbine by depressing its trip pushbutton on CL.**
		6.3	BOP - Verifies main turbine is tripped per 1210-1 by verifying the turbine stop valves are closed and generator and field breakers open (CC).
		6.4	BOP/RO - Continue immediate actions of 1210-1 for the reactor trip. (see attached)
	NOTE: If the reactor tripped automatically during Event #4, then following Event #6 go to and insert Event #5.		

NRC RO OPERATIONAL
SIMULATOR SCENARIO No. 1

	Examiner Notes and Actions		Expected Operator Actions
7.	NOTE: MU-P-1C will fail to automatically start on any ESAS actuation.	7.1	RO - Monitors ESAS component status on ESAS panel (PCR) to verify proper safety system response per 1210-1.
		7.2	RO - Diagnoses failure of MU-P-1C to automatically start as required for ES, by its green breaker status lamp on CR or its amber ES status lamp on PCR.
		7.3	RO - Manually starts MU-P-1C using its control switch on CR, per 1210-1 and 1210-10.
		7.4	RO - Verifies MU-P-1C starts by its red breaker status indication on CC and its blue ES status lamp on PCR.
		7.5	RO - Verifies A and B train HPI flows exist on all four lines using their indicators, MU-FI-1126 and 1127 on CC, MU-FI-1128 and 1129 on CR.
	SHIFT FOREMAN: Following all 1210-1 immediate actions by CROs, announce to team and commence 1210-1 immediate action verification.	7.6	RO/BOP - Verify 1210-1 immediate actions with Shift Foreman as read by Shift Foreman, and continue to monitor plant conditions.
8.	NOTE: The LOCA size will eventually result in loss of 25°F subcooled margin.	8.1	BOP/RO - Diagnose loss of 25°F subcooled margin by the following indications: ◆ Alarm G-1-8 ◆ One or both Margin to Saturation meters on PCL indicate less than 25°F

NRC RO OPERATIONAL
SIMULATOR SCENARIO No. 1

Examiner Notes and Actions		Expected Operator Actions
NOTE: 8.2 is a Critical Task.	8.2	**RO - Performs 1210-2 immediate actions for loss of 25°F subcooled margin as follows:** ♦ **Secures RC-P-1B, RC-P-1C, and RC-P-1D using their control switches on CC, within 2 minutes per 1210-10 rule.** ♦ **Verifies HPI flow on all four HPI flow meters MU-FI-1126 and 1127 on CC, and MU-FI-1128 and 1129 on CR.**
	8.3	BOP - Performs 1210-2 immediate actions for loss of 25°F subcooled margin as follows: ♦ Verifies EF-P-1, EF-P-2A, and EF-P-2B start by indications of speed, breaker status lamps, and pump discharge pressures (on CL and CC) ♦ Verifies EFW flow to both SGs as indicated on EF-FI-779/788 for A-SG, and on EF-FI-782/791 for B-SG (on CL and CC) ♦ Verifies SG levels increasing toward 75-85% on operating range level indications LI-1103 for A-SG and LI-1105 for B-SG (both on CC)
SHIFT FOREMAN: After 1210-2 immediate actions have been performed by CROs, transition from 1210-1 to 1210-2, verify immediate actions of 1210-2, and direct CROs in 1210-2 follow-up actions.	8.4	RO/BOP - Verify 1210-2 immediate actions as read by Shift Foreman, and perform 1210-2 follow-up actions as directed by SF.
	8.5	RO - Operates RC and MU system valves from CC as directed by the Shift Foreman per 1210-2 follow-up actions.

NRC RO OPERATIONAL
SIMULATOR SCENARIO No. 1

Examiner Notes and Actions		Expected Operator Actions
	8.6	BOP - Recognizes requirement to throttle EFW flows per 1210-10 EFW Throttling Criteria, due to SG pressure response to the EFW flow.
	8.7	BOP - Throttles EFW flows per 1210-10 as follows: ♦ Transfers EF-V-30A, 30B, 30C, and 30D controllers to manual (CL and CC) ♦ Operates EF-V-30A/D and EF-V-30B/C controllers as necessary to throttle EFW flows, while ensuring both SG levels are still increasing toward 75-85% setpoint with RCS subcooled margin < 25°F
SHIFT FOREMAN: Continue to direct 1210-2 and 1210-6 follow-up actions, and direct HPI throttling for PTS considerations when at least 25°F subcooled margin has been regained.	8.8	BOP - Continues to feed and steam both steam generators as necessary to maintain them as heat sinks per 1210-6, and attempts to develop RCS natural circulation per 1210-10.
NOTE: When ESAS trains A and B are clear, 2 of 3 sets of block loading sequence blue lamps will be extinguished for each train on PCR.	8.9	RO/BOP - When directed by Shift Foreman, clear ESAS signals for HPI throttling as follows: ♦ Bypass 1600# auto channels, 3 on train-A and 3 on train-B, by depressing their bypass pushbuttons on CC and CR ♦ Defeat 4# auto channels, 2/3 on train-A and 2/3 on train-B, by depressing their defeat pushbuttons on CC and CR ♦ Defeat and reset 1600# manual channels 3 on train-A and 3 on train-B, by depressing their defeat/enable pushbuttons on CC and CR

NRC RO OPERATIONAL
SIMULATOR SCENARIO No. 1

Examiner Notes and Actions		Expected Operator Actions
NOTE: 8.10 is a Critical Task.	8.10	**RO - When directed by Shift Foreman, throttles HPI for PTS concerns per 1210-10 as follows:** ♦ **Verifies that at least 25°F subcooled margin has been regained as indicated by PPC point C4006** ♦ **Operates MU-V-16A, 16B, 16C, and 16D using their pushbuttons on CC and CR as necessary to control HPI flows** ♦ **Reopens MU-V-36 and MU-V-37 using their pushbuttons on CC prior to throttling below 100 gpm/HPI pump as indicated on MU-FI-1126 and 1127 on CC for MU-P-1A, and MU-FI-1128 and 1129 on CR for MU-P-1C**
SHIFT FOREMAN: Direct primary CRO to throttle HPI and control RCS subcooled margin between 30°F and 70°F, to comply with 1210-10 PTS Guideline.		
SHIFT FOREMAN: Continue to direct CROs in 1210-6 follow-up actions for the small break LOCA cooldown.	8.11	RO/BOP - Perform 1210-6 follow-up actions as directed by the Shift Foreman for the small break LOCA cooldown.
NOTE: RCP Restart Criteria of 1210-10 will not be met during this scenario.		

NRC RO OPERATIONAL
SIMULATOR SCENARIO No. 1

7.0 TERMINATION POINT

When all of the following conditions exist:

1. Examinees had opportunity to perform all critical tasks as designed.
2. RCS pressure (subcooled margin) is being controlled by HPI throttling.
3. Small break LOCA cooldown at approximately 100°F/hour has commenced per 1210-6.
4. Examiners agree to terminate.

ON-LINE MAINTENANCE RISK MANAGEMENT

ON-LINE RISK # 58 **Rev : 0**

RISK EVALUATION SUMMARY - RR-P-1A

Risk Achievement Worth (RAW) is the factor increase in core damage frequency resulting when the structure, system, or component (SSC) is determined to be continuosly failed.

Assumptions:

RR-P-1A will be removed from service for shaft bearing replacement. Duration is scheduled for approximately 16 hours.

1. LIST THE TYPE OF RISK CONCERNS EVALUATED

Reduction in energy removal from containment post accident conditions.
Failure of containment post accident.

2. LIST IMPORTANT SSCs WHICH NEED TO BE MAINTAINED OPERABLE

RB Emergency Cooling Train "B"
Building Spray Trains "A" and "B"
DC Power Trains "A" and "B"
AC Power Trains "A" and "B"

3. LIST IMPORTANT MANUAL ACTIONS WHICH SHALL BE BRIEFED WITH THE APPROPRIATE PERSONNEL

Verify or align 1C ES Valves MCC to the 1S Bus

If an ES actuation occurs direct immediate restoration of Emergency Cooling Train "A".

4. IDENTIFY CONTINGENCY PLANS OR COMPENSATORY ACTIONS USED TO REDUCE RISK

COMPENSATORY ACTIONS (PRIOR TO/IN PREPARATION FOR OUTAGE):

Verify of align 1C ES Valves MCC to the 1S Bus

CONTINGENCY ACTIONS:

5. EVALUATION APPROVALS

- ○ 1. Risk found acceptable
- ● 2. Risk found acceptable with contingencies identified
- ○ 3. Risk unacceptable,

Signature of Evaluator: FOR TRAINING on 02/13/2000

Signature of Director: FOR TRAINING on 02/13/2000

CC: Job Package
Shift Supervisor Clipboard
Operations Department General Files
STA

NRC RO OPERATIONAL
SIMULATOR SCENARIO No. 2

MAIN GENERATOR PLACED ON LINE DURING PLANT STARTUP, AND SECONDARY PRESSURE TRANSIENT CAUSING OTSG TUBE LEAK WITH PRIMARY INVENTORY & PRESSURE CONTROL FAILURES

DEVELOPED BY/DATE: _____ 12/15/99

REVIEWED BY/DATE: _____ 12/15/99

APPROVED BY/DATE: _____ 12/15/99
(OPERATIONS TRAINING MANAGER)

NRC RO OPERATIONAL
SIMULATOR SCENARIO No. 2

SCENARIO CHANGE HISTORY PAGE

REVISION	DATE	REFERENCE TITLE	DESCRIPTION (Include AI # if appropriate)

NRC RO OPERATIONAL
SIMULATOR SCENARIO No. 2

1.0 GENERAL DESCRIPTION OF SCENARIO

Reactor at 14% power, 300 EFPD, during a xenon-free plant startup.

Main turbine-generator is synchronized and loaded.

Power is increased and main turbine is placed in auto.

Turbine header pressure instrument fails low causing SASS mismatch and secondary pressure transient.

A 45 gpm tube leak occurs on A-SG.

Plant shutdown is performed per 1210-5.

One turbine bypass valve fails open when main turbine is tripped.

Pressurizer level transmitter fails high as RCS temperature is reduced during reactor shutdown.

MU-P-1A trips upon start.

RC-V-1 does not open to reduce subcooled margin per 1210-5.

Plant cooldown is commenced after subcooled margin is minimized.

Estimated scenario time - 80 minutes. **3 Critical Tasks**

2.0 REFERENCES

A. 10 CFR 55.45 Operating Tests, (a) Content (3), (4), (5), (6), (7), (8), (9), (12), (13)

B. PROCEDURES

1102-2	Plant Startup (sign-off copy required for crew)
1106-1	Turbine Generator (sign-off copy required for crew, and copy required for examiner)
1106-2	Condensate System (sign-off copy required for crew)
1106-3	Feedwater System (sign-off copy required for crew)
1104-2	Makeup and Purification System
1210-5	OTSG Tube Leakage
1102-10	Plant Shutdown
1202-12	Excessive Radiation Levels
1202-29	Pressurizer System Failure
1210-1	Reactor Trip (copies required for examiners)

Alarm Responses

NRC RO OPERATIONAL
SIMULATOR SCENARIO No. 2

3.0 TASKS

0450050101	Synchronize and load turbine generator
0450060101	Increase load on turbine generator
341C020101	Perform a plant startup
0150030101	Operate the ICS in hand
0150040101	Transfer ICS stations to automatic
0158020401	Respond to a SASS mismatch/actuation
000C220501*	**Respond to OTSG tube leak**
0000610501	Respond to excessive radiation levels
3418000101	Perform plant power changes
0450100101	Unload turbine generator
0450120101	Shutdown the turbine generator
0008370501*	**Isolate affected OTSG during excessive heat transfer**
0010290101*	**Operate the CRD system to shutdown the reactor**
0008140401	Respond to a malfunction in PZR level indication or control
0000070501	Respond to a reactor trip as the primary CRO
0000080501	Respond to a reactor trip as the secondary CRO
0130040101	Bypass or defeat an ES channel

*** Critical Task**

NRC RO OPERATIONAL
SIMULATOR SCENARIO No. 2

4.0 SIMULATOR INITIALIZATION

A. IC12 14% reactor power, MOC, xenon-free, main turbine at 1800 rpm.

Ensure MSK2609A = 214.7, then place simulation in RUN and ensure the following:

1. Main Feedwater Pump is running on main steam (AS-V-5A closed)
2. Gland steam is supplied by main steam (AS-V-8 closed)

B. EVENT TRIGGERS

#6 TC:TRIP
Command: IMF MS09D 100

#7 CRQCRNRM<0.1
Command: IMF RC04A 0 600

#8 MUPDISA>1000
Command: IMF MU01A

#9 RD:CFTRP

C. MALFUNCTIONS

MS01A MS10A-PT1 failure; insert at 0% severity over 20 second ramp on Event #3.
TH16A A-SG tube leak; insert at 0.3% severity (45 gpm) on Event #4.

D. REMOTE FUNCTIONS

None

E. OVERRIDES

02A5S06-ZDIPBORCV1 OPN CC RC-V-1 OPEN PB; insert OFF on Event #9.

F. MONITOR

Set MSK2609A = 214.7 immediately (auxiliary steam pressure).

NRC RO OPERATIONAL
SIMULATOR SCENARIO No. 2

5.0 SCENARIO PREVIEW

A. EXAMINER PREVIEW

Plant at 14% power, during xenon-free plant startup at MOC. Main Turbine is at 1800 rpm.

1. Secondary CRO will synchronize and load turbine-generator per 1106-1.
2. Secondary CRO will increase reactor power using Reactor Demand to obtain 579°F T-ave, then transfer ICS stations to auto, including main turbine.
3. Selected turbine header pressure transmitter (MS10A-PT1) fails low over 20 seconds. The secondary CRO must respond to the SASS mismatch per H-3-2 by assuming hand control of main turbine and selecting good transmitter.
4. A 45 gpm tube leak occurs on A-SG. The team must respond to the excessive radiation levels per 1202-12, and to the tube leak per 1210-5.
5. The primary CRO must operate ICS stations and control rods to shutdown reactor per 1210-5. **(CT)**
6. When the main turbine is tripped at 15% reactor power, MS-V-3D (A-SG) fails 100% open and must be isolated locally. The secondary CRO must then control A-SG pressure. **(CT)**
7. At 10% reactor power during the shutdown, selected pressurizer level transmitter (RC1-LT1) fails to 400" indicated level over 600 seconds. The primary CRO must respond per 1202-29 to control RCS makeup in hand, then select alternate pressurizer level instrument.
8. MU-P-1A trips when it is started for augmented makeup flow during reactor shutdown or after reactor trip per 1210-1. The primary CRO must start MU-P-1C and use HPI as necessary to maintain RCS inventory.
9. Following reactor shutdown when RCS subcooled margin is reduced per 1210-5, RC-V-1 will not manually open. The primary CRO must operate pressurizer vent and/or PORV as necessary to reduce subcooled margin. **(CT)**

NRC RO OPERATIONAL
SIMULATOR SCENARIO No. 2

B. SHIFT BRIEFING

1. Reactor is at 14% power during a xenon-free startup at 300 EFPD.

2. The main turbine is at 1800 rpm and ready to load.

3. The plant tripped 80 hours ago due to a main generator relay failure.

4. FW-P-1A and gland steam are currently supplied by main steam per 1102-2.

5. Continue plant startup by synchronizing and loading main turbine-generator, and increasing power per 1102-2.

NRC RO OPERATIONAL
SIMULATOR SCENARIO No. 2

6.0 SEQUENCE OF EVENTS

Examiner Notes and Actions	Expected Operator Actions
♦ **ICO**: Initialize the simulator per Section 4.0.	
♦ **IPOI**: Assign team positions and conduct the SHIFT BRIEFING per Section 5.B.	♦ Assume assigned team positions.
♦ Provide Shift Foreman with sign-off copies of 1102-2, 1106-1, 1106-2, and 1106-3.	♦ Take turnover and review plant status.
♦ Allow crew 3-5 minutes to take turnover and assume the watch.	♦ Assume the watch and inform examiner.
1. **SHIFT FOREMAN**: Direct secondary CRO actions to synchronize and initially load main turbine-generator per 1106-1.	
	1.1 BOP – Operates main generator excitation controls on CL to establish main generator voltage per 1106-1.
EXAMINER: Refer to a copy of 1106-1 to follow specific control manipulations.	
	1.2 RO – Operates ICS Reactor Demand station on CC as necessary to slowly raise reactor power during turbine-generator initial loading.
	1.3 BOP – Operates Digital Turbine Control System (DTCS), main generator breakers, and main generator voltage controls (all on CL) to synchronize and load main generator to minimum load (40MW) per 1106-1.

NRC RO OPERATIONAL
SIMULATOR SCENARIO No. 2

Examiner Notes and Actions	Expected Operator Actions
2. **SHIFT FOREMAN**: After turbine-generator is loaded to 40 MW, direct CROs to continue power escalation at less than 30% power per hour (MMRs) per 1102-2.	
	2.1 RO – Operates Reactor Demand station (CC), to create positive neutron error such that control rods pull and reactor power increases. BOP - Operates Turbine ICS station (CL) to increase main generator load, and operates FW-P-1A ICS station (CL) to maintain main feedwater valve d/p at ≥ 35 psid.
SHIFT FOREMAN: Direct primary CRO to maintain pressurizer level within Figure 1 of 1102-2, bleeding to C-RCBT as necessary. Provide Figure 1 to primary CRO.	2.2 RO – Operates the following makeup and LWDS system components as necessary to maintain pressurizer level increase within Figure 1 as T-ave increases, and to maintain makeup tank level within Figure 1 of 1104-2: ♦ MU-V-17 ICS station setpoint (CC) ♦ Bleed Tank Select switch on LWDS ♦ MU-V-8 (THRU/BLEED) pushbuttons (CC) ♦ MU-V-5 demand setpoint (CC)
SHIFT FOREMAN: Direct CROs in operation of ICS controls per 1102-2 when RCS T-ave reaches 579°F.	
	2.3 BOP/RO – Transfers Reactor Demand ICS station (CC) to auto when T-ave reaches 579°F.
	2.4 BOP/RO – Increases demand on SG/Rx Master ICS station (CC) until CRD out motion is obtained, then transfers SG/Rx Master to auto.
	2.5 BOP – Operates turbine ICS station (CL) to increase load until turbine bypass valves (MS-V-3s) close, then transfers turbine to auto.

NRC RO OPERATIONAL
SIMULATOR SCENARIO No. 2

Examiner Notes and Actions	Expected Operator Actions
3. **ICO**: Approximately one (1) minute after turbine is in auto, or when directed by Examiner, activate EVENT #3 to cause selected turbine header pressure transmitter, MS10A-PT1, to fail low (600 psig) and cause SASS mismatch.	
	3.1 BOP – Responds to SASS Mismatch alarm (H-3-2), and diagnoses mismatch on turbine header pressure recorder on CC.
NOTE: Large header pressure error for greater than 10 seconds will cause turbine ICS station to revert to HAND, and cause alarm H-3-3.	
	3.2 BOP – Diagnoses main turbine ICS station (CL) reverted to HAND, by alarm H-3-3 and white lamp illuminated on turbine ICS station.
	3.3 BOP – Assumes hand control of main turbine ICS station to control header pressure and return it to 885 psig per H-3-3.
SHIFT FOREMAN: Implement H-3-2 and H-3-3 after secondary CRO performs initial manual actions, and verify/direct the actions therein.	
	3.4 RO – Responds to OTSG pressure transient effects on RCS temperature, pressure, inventory, and reactor power. ◆ Verifies automatic response of MU-V-17 ◆ Verifies automatic response or RC-V-1 (pressurizer spray on CC) ◆ Verifies automatic response of PZR heaters on CR
	3.5 BOP – Selects alternate turbine header pressure instrument per H-3-2, by depressing its SASS pushbutton on CC.

NRC RO OPERATIONAL
SIMULATOR SCENARIO No. 2

Examiner Notes and Actions		Expected Operator Actions
	3.6	BOP – Obtains zero (0) header pressure error as indicated on turbine ICS station (50% in Header Pressure Error position), and with turbine bypass valves closed, transfers main turbine ICS station back to auto.
SHIFT FOREMAN: Direct secondary CRO in follow-up actions for SASS Mismatch per H-3-2.		
	3.7	BOP – Performs follow-up actions of H-3-2 as directed by the Shift Foreman.
4. **ICO**: After main turbine is back in automatic, or when directed by Examiner, activate EVENT #4 to insert a 45 gpm tube leak in A-SG.		
	4.1	BOP/RO – Diagnose indications of a tube leak into A-SG by the following: ♦ High radiation alarms (C-1-1) on main condenser off-gas monitors RM-A-5 & 15, and on A-SG steam line monitor RM-G-26 (all monitors in upper right of PRF) ♦ Increase in RCS makeup flow and decrease in makeup tank level (CC) with stable RCS temperature
	4.2	BOP/RO – Perform immediate actions of 1202-12 for the excessive radiation levels: ♦ Announce radiation monitor alarms on plant page and radio ♦ Mark meteorological chart (PLF) and radiation monitor chart (PRF) ♦ Contact Group Rad Con Supervisor

NRC RO OPERATIONAL
SIMULATOR SCENARIO No. 2

Examiner Notes and Actions	Expected Operator Actions
SHIFT FOREMAN: Following CRO actions for the excessive radiation levels, implement 1202-12 and C-1-1 and verify/direct actions.	
	4.3 RO – Performs actions of C-1-1 to validate and quantify tube leak.
	4.4 RO – When tube leak is validated, recommends plant shutdown per 1210-5, and may close MU-V-3 (CC) to isolate letdown if necessary for RCS inventory control.
5. **SHIFT FOREMAN**: After primary CRO validates and quantifies SG tube leakage, implement 1210-5 and direct **primary CRO** to commence plant/reactor shutdown per 1210-5 at 3-5% per minute.	
NOTE: 5.1 is a Critical Task.	5.1 **RO - Effects plant shutdown by performing the following per 1210-5:** ♦ **Sets ULD rate of change at 30-50%** ♦ **Reduces ULD input to reduce reactor power** ♦ **When OTSGs reach low level limits (alarms H-1-6 and H-1-7), transfers SG/Rx Master and Reactor Demand stations to HAND** ♦ **Transfers the Diamond Rod Control panel to manual, and inserts control rods to continue reactor shutdown**

NRC RO OPERATIONAL
SIMULATOR SCENARIO No. 2

Examiner Notes and Actions	Expected Operator Actions
SHIFT FOREMAN: If primary CRO requests which RC bleed tank to select for feed, direct primary CRO to use B-RCBT.	
	5.2 RO - Operates makeup system and LWDS controls as necessary to maintain RCS and makeup system inventory during reactor power and T-ave reduction with 45 gpm leak: ♦ Opens MU-V-217 using its pushbutton on CC to augment normal makeup line flow through MU-V-17 ♦ Operates Feed Tank Select and Feed Pump Select switches on LWDS to align selected RC bleed tank & pump for feed ♦ Operates makeup system batch controller (CC) and opens MU-V-10 (CC) to enable a batch feed ♦ Operates Waste Transfer (feed) Pump control on LWDS to start batch feed to makeup tank ♦ Operates makeup batch controller and/or MU-V-14A (CC) as necessary to maintain makeup tank within limits of 1104-2, Figure 1
	5.3 BOP - Operates FW-P-1A ICS station demand (CL) as necessary to maintain at least 25" main feedwater valve delta-p on SP-11A/B-DPT2.
SHIFT FOREMAN: Continue to direct 1210-5 actions to shut down plant and reactor, and at 15% reactor power direct **secondary CRO** to unload and trip main turbine.	

NRC RO OPERATIONAL
SIMULATOR SCENARIO No. 2

Examiner Notes and Actions	Expected Operator Actions
	5.4 BOP - Secures main turbine at 15% power as follows: (controls on CL) ♦ Transfers main turbine ICS station to hand ♦ Decreases turbine ICS demand to unload generator to 0 MW, while verifying that turbine bypass valves control SG pressures ♦ Manually trip main turbine by depressing turbine TRIP button
6. ICO: When the main turbine is tripped, verify EVENT #6 activates to cause MS-V-3D to fail 100% open. NOTE: This MS-V-3D failure may not be diagnosed until lower in reactor power during reactor shutdown, or possibly not until MS-V-3 ICS stations are taken to hand for reactor trip per 1210-5.	
	6.1 BOP - Recognizes lower demand on ICS station for MS-V-3D/E/F as compared to demand for MS-V-3A/B/C on B-SG, and/or notices MS-V-3E and 3F closed but MS-V-3D open.
	6.2 BOP - Diagnoses failure of MS-V-3D by: ♦ Zero (0) demand on ICS station for MS-V-3D/E/F (CC) ♦ Red open indication for MS-V-3D (CC) ♦ A-SG pressure decreasing below desired pressure.
NOTE: 6.3 is a Critical Task.	**6.3 BOP - Respond to MS-V-3D failure by directing auxiliary operator to locally isolate or manually close MS-V-3D.**

NRC RO OPERATIONAL
SIMULATOR SCENARIO No. 2

Examiner Notes and Actions		Expected Operator Actions
ICO-ROLE PLAY: As AO if directed to locally isolate MS-V-3D, after a 2-3 minute time delay use **MSR10** to close MS-V-11D. If directed to manually close MS-V-3D, after a 2-3 minute time delay: insert **MSR36** at 100%, change **MSR35** to MANUAL, then insert **MSR36** at 0% over 30 second ramp. After the appropriate task is complete, report task complete to control room.		
	6.4	BOP - Recognize MS-V-3D isolation by proper A-SG pressure control by MS-V-3E/F. Recognize MS-V-3D manual closure by green position indication on CC, and proper A-SG pressure control by MS-V-3E/F.
	5.5	RO - Operates CRD panel as necessary to reduce reactor power until T-ave = 545°F.
ICO: When reactor power is less than 10% (CRQCRNRM<0.1), verify EVENT #7 activates to fail selected pressurizer level transmitter to 400" over 600 seconds.		
	7.1	RO - Diagnose decreasing makeup flow (CC) to RCS and increasing makeup tank level (CC), and recognize increase in pressurizer level RC1-LT1 on recorder (CC), with decrease in pressurizer level on digital, LI-777A (CC).
	7.2	RO - Diagnose probable failure of RC1-LT1 on pressurizer level recorder by conflicting indications of: ♦ Increase on RC1-LT1 recorder level (CC) but decrease on LI-777A digital level (CC) ♦ Increase on RC1-LT1 recorder level but decreasing RCS temperature and pressure

NRC RO OPERATIONAL
SIMULATOR SCENARIO No. 2

Examiner Notes and Actions		Expected Operator Actions
	7.3	RO - Respond to failure of RC1-LT1 per 1202-29, Section D as follows: ♦ May close MU-V-3 (CC) to isolate RCS letdown if not previously done per 1210-5 ♦ Transfer MU-V-17 controller to HAND (CC), and increase MU-V-17 demand to obtain required makeup flow and maintain real pressurizer level on LI-777A ♦ Select alternate pressurizer level for recorder, RC1-LT3 (CC) ♦ Select alternate pressurizer temperature, RC2-TE2 (CC)
SHIFT FOREMAN: After primary CRO has performed 1202-29, Section D immediate manual actions, implement 1202-29, Section D and verify/direct the immediate actions.		
	7.4	RO - Verify or perform immediate actions for RC1-LT1 failure as read by Shift Foreman.
	7.5	RO - Following selection of RC1-LT3, check level error on MU-V-17 controller, and with zero error at appropriate level setpoint, transfer MU-V-17 back to auto.
SHIFT FOREMAN: Continue to direct CRO actions per 1210-5 to shutdown (trip) reactor and control SG pressures to prevent MSSV lift.		
	5.6	BOP - Transfers turbine bypass valve (MS-V-3) ICS stations on CC to hand prior to reactor trip, per 1210-5.
EXAMINERS: Refer to copy of 1210-1 for required operator actions.	5.7	RO - At 545°F T-ave, manually trips reactor per 1210-5 and commences 1210-1 immediate actions.

NRC RO OPERATIONAL
SIMULATOR SCENARIO No. 2

	Examiner Notes and Actions		Expected Operator Actions
	EXAMINER: When RO starts MU-P-1A per 1210-1 immediate actions, it will trip. See EVENT #8 for operator actions.		
		5.8	BOP - Operates turbine bypass valve ICS stations in HAND to stabilize SG pressures and prevent MSSV lift (at >1040 psig).
		5.9	BOP - Performs 1210-1 immediate actions for the reactor trip: verifies turbine tripped, and ensures main feedwater controlling SG levels at 25" on startup range indications (CC).
8.	**ICO**: When MU-P-1A is started, verify it trips by EVENT #8 activation.	8.1	RO - Starts MU-P-1A, DC-P-1A, and DR-P-1A using their extension controls on CC, per 1210-1 immediate actions.
		8.2	RO - Diagnoses MU-P-1A trip by the following alarms and indications: ♦ Alarms B-1-2 and B-2-2 ♦ Green and amber lamps for MU-P-1A breaker status above its control switch on CC ♦ Zero (0) amps indicated on MU-P-1A ammeter above its control switch on CC
		8.3	RO - Starts MU-P-1C, DC-P-1B, and DR-P-1B using their extension controls on CR.
		8.4	RO - Opens HPI valves MU-V-16C/D using their pushbuttons on CR, to provide additional makeup flow to RCS as necessary to maintain pressurizer level per 1210-1.

NRC RO OPERATIONAL
SIMULATOR SCENARIO No. 2

Examiner Notes and Actions	Expected Operator Actions
EXAMINERS: Refer to copy of 1210-1 for required operator actions.	
	5.10 RO/BOP - Perform remaining immediate actions for reactor trip per 1210-1.
SHIFT FOREMAN: Following all 1210-1 immediate actions by CROs, announce to team and commence 1210-1 immediate action verification.	
	5.11 RO/BOP - Verify 1210-1 immediate actions as read by Shift Foreman, and continue to monitor plant conditions.
SHIFT FOREMAN: Transition back to 1210-5 from 1210-1, and continue directing CROs in 1210-5 follow-up actions after reactor trip.	
	5.12 BOP - Operates MS-V-3 ICS controllers (CC) as necessary to steam both OTSGs and reduce RCS T-hot below 540°F per 1210-5.
ICO: Verify EVENT #9 activated when reactor was tripped, to fail RC-V-1 OPEN pushbutton.	
9. **SHIFT FOREMAN**: Direct primary CRO to secure pressurizer heaters and commence maximum pressurizer spray to reduce RCS subcooled margin below 70°F, but not lower than 40°F.	
	9.1 RO - Secures all pressurizer heaters by turning control switches for Banks 1, 2, 3, 4, and 5 to OFF on CR.
	9.2 RO - Transfers RC-V-1 control on to MAN, and depresses OPEN pushbutton for RC-V-1 (CC).

NRC RO OPERATIONAL
SIMULATOR SCENARIO No. 2

Examiner Notes and Actions		Expected Operator Actions
	9.3	RO - Diagnoses and reports failure of RC-V-1 to open as indicated by no OPEN red lamp illuminated when pushbutton was depressed.
SHIFT FOREMAN: When primary CRO reports RC-V-1 failure to open, direct primary CRO to use pressurizer vent and/or PORV to reduce RCS subcooled margin.		
NOTE: 9.4 is a Critical Task.	9.4	**RO - Operate pressurizer vent valves RC-V-44 (PC) and RC-V-28 (CC), and/or PORV (CC) to reduce RCS subcooled margin to between 40°F and 70°F as indicated on Margin To Saturation meters on PCL: TI-977 and TI-978.**
SHIFT FOREMAN: Direct CROs to bypass 1600# ESAS channels when BYPASS PERMITS are obtained during RCS pressure reduction.		
	9.5	RO/BOP - When 1600# ESAS channel bypass permits are obtained as indicated by the white BYPASS PERMIT lamps illuminated for channels RC-1A, 2A, and 3A (CC) and RC-1B, 2B, and 3B (CR), perform the following: ♦ Depress BYPASS pushbuttons for RC-1A, 2A, and 3A on CC, and verify yellow BYPASS lamps illuminate ♦ Depress BYPASS pushbuttons for RC-1B, 2B, and 3B on CR, and verify yellow BYPASS lamps illuminate

NRC RO OPERATIONAL
SIMULATOR SCENARIO No. 2

7.0 TERMINATION POINT

When all of the following conditions exist:

1. Examinees had opportunity to perform all critical tasks as designed.
2. RCS subcooled margin has been minimized (<70°F), and 1600# ESAS channels are bypassed.
3. Crew is preparing to commence plant cooldown per 1210-5.
4. Examiners agree to terminate.

NRC RO OPERATIONAL
SIMULATOR SCENARIO No. 3

MAKEUP PUMPS SHIFTED, MAKEUP SYSTEM LEAK REQUIRING PLANT SHUTDOWN, TURBINE TRIP AT 40% POWER, AND MAIN STEAM LINE BREAK OUTSIDE CONTAINMENT CAUSING EXCESSIVE PRIMARY TO SECONDARY HEAT TRANSFER

DEVELOPED BY/DATE: 12-14-99

REVIEWED BY/DATE: 12/16/99

APPROVED BY/DATE: 12/17/99
(OPERATIONS TRAINING MANAGER)

NRC RO OPERATIONAL
SIMULATOR SCENARIO No. 3

SCENARIO CHANGE HISTORY PAGE

REVISION	DATE	REFERENCE TITLE	DESCRIPTION (Include AI # if appropriate)

NRC RO OPERATIONAL SIMULATOR SCENARIO No. 3

1.0 GENERAL DESCRIPTION OF SCENARIO

Plant at 100% power, MOC, with IA-P-1A out of service.

Operating makeup pumps are shifted to remove MU-P-1B from service.

A makeup system leak occurs downstream of MU-V-17 and MU-FT-24A fails low.

Normal makeup line must be isolated, and management orders plant shutdown.

As FW-P-1A is unloaded to secure it, the selected B-train MFW valve d/p transmitter fails low.

The main generator and turbine trips at 40% power.

A main steam line break on A-SG occurs outside containment in Intermediate Building.

The reactor will trip automatically if not tripped manually.

FW-V-5A breaker trips and HSPS fails to close FW-V-16A and 17A on low SG pressure.

MU-V-16C will not close upon demand to secure HPI.

Plant will be stabilized with A-SG isolated.

Estimated scenario time - 70 minutes. **3 Critical Tasks**

2.0 REFERENCES

A. 10 CFR 55.45 Operating Tests, (a) Content (3), (4), (5), (6), (7), (8), (9), (12), (13)

B. PROCEDURES

1104-2	Makeup and Purification System
1102-10	Plant Shutdown
1106-3	Main Feedwater
1203-24	Steam Leak
1210-1	Reactor Trip (copies required for examiners)
1210-3	Excessive Primary to Secondary Heat Transfer (copies required for examiners)
1210-10	Abnormal Transients Rules, Guides, and Graphs

Alarm Responses

NRC RO OPERATIONAL
SIMULATOR SCENARIO No. 3

3.0 TASKS

004C020101	Perform shifting of makeup pumps
0000590501*	**Respond to accidental liquid radioactive water release (RCS)**
3418000101	Perform plant power changes
0150030101	Operate the ICS in hand
0598050101	Manually operate a main feedwater pump
0158020401	Respond to a SASS mismatch/actuation
0008310501	Respond to a turbine trip below the anticipatory trip setpoint
0000400501	Respond to a steam leak
0000070501	Respond to a reactor trip as the primary CRO
0000080501	Respond to a reactor trip as the secondary CRO
0008370501*	**Isolate the affected OTSG during excessive primary to secondary heat transfer**
000C200501	Respond to excessive primary to secondary heat transfer
0618000501	Respond to an emergency feedwater actuation
0130040101	Bypass or defeat an ES channel
004C040101*	**Throttle high pressure injection**

*** Critical Task**

NRC RO OPERATIONAL
SIMULATOR SCENARIO No. 3

4.0 SIMULATOR INITIALIZATION

A. IC16 100% power, steady-state, MOC.

Place simulation in RUN and perform the following to remove IA-P-1A from service:

1. Red tag IA-P-1A extension control on PLF in pull-to-lock.

B. EVENT TRIGGERS

#3 FWFDFWP1(1)<416
Command: IMF FW06B 0 15

#5 FWVFWV5A<0.95
Command: IMF FW13A

C. MALFUNCTIONS

IA01A	IA-P-1A trip; insert immediately to simulate breaker open for tag-out.
MU14	Makeup line leak; insert at 50% severity (50 gpm) on Event #2.
EG03	Main generator trip; insert on Event #4.
MS03A	MSLB outside RB; insert at 100% severity with 300 second ramp on Event #4.
MS10,SGA,TRN B	HSPS SG-A Train-B failure; insert immediately.

D. REMOTE FUNCTIONS

Per 4.A. above.

E. OVERRIDES

02A3M06-ZAOMU24FI FLO; insert at 0% severity with 120 second delay on Event #2.
03A4S35-ZDIPBCMUV16C ON CR MU-V-16C CLOSE PUSHBUT; insert OFF immediately.
04A2DS03-ZLOIAP1A(1) GRN IA-P-1A; insert OFF immediately.
04A2DS04-ZLOIAP1A(2) RED IA-P-1A; insert OFF immediately.

F. MONITOR

Set MSK2609A = 14.7 immediately (auxiliary steam pressure).

NRC RO OPERATIONAL
SIMULATOR SCENARIO No. 3

5.0 SCENARIO PREVIEW

A. EXAMINER PREVIEW

Plant at 100% power, MOC, with IA-P-1A out of service.

1. The RO will place MU-P-1A in service and secure MU-P-1B per 1104-2.
2. A makeup system leak occurs downstream of MU-V-17 and the low range makeup flow transmitter (MU-FT-24A) fails low. The RO must isolate the normal makeup line to isolate the leak, and HPI must be used to control RCS inventory. **(CT)**
   One hour time compression will be used, and plant management will order a plant shutdown. The plant shutdown will be performed per 1102-10.
3. As FW-P-1A is removed from service per 1102-10 and 1106-3 by the BOP operator, the selected B-train main feedwater valve d/p transmitter fails low causing SASS mismatch but no actuation. The BOP operator must assume hand control of FW-P-1B and select the alternate main feedwater valve d/p transmitter per H-3-2.
4. At 35-40% reactor power, the main generator and turbine trips without reactor trip, causing a main steam line rupture on A-SG in intermediate building. The reactor will eventually trip automatically if not tripped manually per 1203-24. BOP and RO operators must respond to the reactor trip per 1210-1. The RO must start MU-P-1C and use HPI to maintain pressurizer level per 1210-1.
5. Component and safety system failures on the feedwater system will require the BOP operator to manually isolate main and emergency feedwater to the A-SG per 1210-3. **(CT)**
   The BOP operator must then control B-SG feeding and steaming to control RCS temperatures and minimize reheat per 1210-3.
6. When the RCS excessive cooling is terminated, the RO must control (terminate) HPI to control RCS inventory and pressure per 1210-3. However, MU-V-16C will not close on demand from control room, requiring RO to secure MU-P-1C to secure B-train HPI. **(CT)**
7. The crew will perform all follow-up actions of 1210-3 and transition back to 1210-1.

NRC RO OPERATIONAL
SIMULATOR SCENARIO No. 3

B. SHIFT BRIEFING

1. Plant is at 100% power, steady-state, 300 EFPD.

2. IA-P-1A is out of service for inspection and overhaul. The compressor is currently disassembled, and maintenance is awaiting arrival of vendor representative to perform further inspection and cleaning. (See On-Line Maintenance Risk document)

3. Maintenance and Engineering must perform an inspection of MU-P-1B lube oil system while it is shutdown. A switching order is being prepared. Expected duration of the inspection will be 1-2 hours, after which MU-P-1B will be returned to service.

4. DCCW loop-A will be sampled while in service for MU-P-1A operation.

5. Orders for this shift include shifting from MU-P-1B to MU-P-1A in operation, and maintaining 100% power operation.

NRC RO OPERATIONAL
SIMULATOR SCENARIO No. 3

6.0 SEQUENCE OF EVENTS

Examiner Notes and Actions	Expected Operator Actions
♦ **ICO**: Initialize the simulator per Section 4.0.	
♦ **IPOI**: Assign team positions and conduct the SHIFT BRIEFING per Section 5.B.	♦ Assume assigned team positions.
♦ Allow crew 3-5 minutes to take turnover and assume the watch.	♦ Take turnover and review plant status. ♦ Assume the watch and inform examiner.
1. **SHIFT FOREMAN**: Direct primary CRO actions per 1104-2 to place MU-P-1A in service for less than 4 hour run, and secure MU-P-1B.	
	1.1 RO - Starts DC-P-1A, DR-P-1A, and MU-P-1A using their extension controls on CC.
	1.2 RO - Monitors makeup and RCP seal injection parameters on CC to ensure stability.
	1.3 RO - Secures MU-P-1B using its extension control on CR.
SHIFT FOREMAN: Direct RO to start IC-P-1B and secure IC-P-1A per the On-line Maintenance Risk document for MU-P-1B.	
	1.4 RO - Starts IC-P-1B using its extension control on CR, and secures IC-P-1A using its extension control on CR.

NRC RO OPERATIONAL
SIMULATOR SCENARIO No. 3

Examiner Notes and Actions	Expected Operator Actions
2. **ICO**: Approximately one (1) minute after IC-P-1A is secured, or when directed by Examiner, activate EVENT #2 to cause makeup line leak and 120 seconds later, MU-FT-24A fails low.	
	2.1 RO - Diagnose symptoms of primary system leak in Auxiliary Building by the following alarms and indications: ♦ Pressurizer level decrease (CC) with MU-V-17 controller demand increase (CC) ♦ Makeup flow increase on MU-FI-24A and 24B (CC) and eventually D-3-1 alarm ♦ Makeup tank level and pressure decrease and eventually alarms D-3-2 & D-3-3 ♦ Auxiliary Building sump level increase (LWDS recorder) and eventually LWDS-1-1 alarm
SHIFT FOREMAN: Implement alarm response procedures as they occur or as requested by RO.	
	2.2 BOP/RO - Dispatch personnel to Auxiliary Building to search for leaks.
	2.3 RO - Closes MU-V-3 by depressing its CLOSE pushbutton on CC to isolate letdown and conserve RCS inventory per D-3-1.
	2.4 RO - Recognize failure of MU-FT-24A by its indication on CC meter dropping to zero (0), with flow still indicated on MU-FI-24B.
ICO-ROLE PLAY: As auxiliary operator looking for leak in auxiliary building, report a bad leak in overhead of 281' elevation just outside makeup valve alley.	

NRC RO OPERATIONAL
SIMULATOR SCENARIO No. 3

Examiner Notes and Actions		Expected Operator Actions
SHIFT FOREMAN: If RO inquires as to which RC Bleed Tank to use for feed to makeup system, direct RO to use B-RCBT.		
	2.5	RO - Operates the following LWDS and makeup system controls to initiate feed to makeup tank per D-3-2: ◆ Selects B-RCBT using FEED TANK SELECT switch on LWDS ◆ Selects a waste transfer pump using FEED PUMP SELECT switch on LWDS ◆ Operates makeup batch controller and MU-V-10 on CC to enable a batch feed ◆ Starts selected waste transfer pump on LWDS to initiate batch feed to makeup tank ◆ Operates makeup batch controller as necessary to maintain makeup tank level and pressure within limits of 1104-2, Figure 1
SHIFT FOREMAN: Based upon report from field, direct the primary CRO to isolate makeup to the RCS - more specifically, close MU-V-17 and MU-V-18.		
NOTE: 2.6 is a Critical Task.	2.6	**RO - Closes MU-V-17 by transferring its controller (CC) to HAND and decreasing the demand to zero (0), and closes MU-V-18 by depressing its CLOSE pushbutton on CC.**
ICO-ROLE PLAY: Monitor the makeup system mimic on the Instructor Station, and when MU-V-17 and MU-V-217 both indicated closed, report to control room that the leak outside makeup valve alley has stopped.		

NRC RO OPERATIONAL
SIMULATOR SCENARIO No. 3

Examiner Notes and Actions	Expected Operator Actions
	2.7 RO - Operates MU-V-16A or MU-V-16B using their OPEN, CLOSE, and STOP pushbuttons on CC, as needed to restore and maintain pressurizer level.
EXAMINER: After pressurizer level and makeup tank level are under control and stable with the makeup leak isolated, inform crew that after one (1) hour of time compression, plant management has ordered a plant shutdown to repair the leak.	
SHIFT FOREMAN: Implement 1102-10 and direct **primary CRO** to commence plant shutdown at 5% per minute.	
	2.8 RO - Commences plant shutdown by: ♦ Setting ULD rate of change at 50% (CC) ♦ Lowering ULD setting to reduce power (CC)
SHIFT FOREMAN: Direct CRO actions for plant shutdown per 1102-10.	
	2.9 BOP/RO - Monitor critical parameters during plant shutdown.
	2.10 BOP - Secures moisture separator drain pumps (MO-P-1A-F) using their extension controls on CL, when directed by Shift Foreman.
SHIFT FOREMAN: Direct primary CRO to stop power reduction at approximately 40%, to secure FW-P-1A and HD-P-1C.	
	2.11 RO - Operates ULD (CC) as necessary to stop plant power reduction at approximately 40% as directed by Shift Foreman.

NRC RO OPERATIONAL
SIMULATOR SCENARIO No. 3

Examiner Notes and Actions	Expected Operator Actions
3. **SHIFT FOREMAN**: When the plant has stabilized at approximately 40% power, direct the secondary CRO to secure **FW-P-1A**.	3.1 BOP - Performs actions to secure FW-P-1A per 1106-3 as follows: (all on CL) ◆ Transfers FW-P-1A ICS station to HAND ◆ Slowly lowers FW-P-1A ICS station demand to reduce FW-P-1A speed and flow ◆ Monitors FW-P-1B speed and flow to ensure proper automatic response to decreasing FW-P-1A speed and flow
ICO: Verify EVENT #3 activates to fail SP11B-DPT2 low over 15 seconds, as FW-P-1A speed is reduced.	
	3.2 BOP - Diagnoses decreasing (failed) B-train MFW valve d/p as follows: ◆ Indication on SP11B-DPT2 (CC) drops to 0 ◆ SASS Mismatch alarm H-3-2 ◆ SASS Mismatch red lamps illuminated on SP11B-DPT1 and DPT2 ◆ Low MFW valve d/p alarm M-1-5 ◆ Increase in FW-P-1B speed and flow due to automatic ICS controller response to low MFW valve d/p
	3.3 RO - Monitors RCS critical parameters and responds to the slight overcooling effects of the FW-P-1B transient: ◆ Operates MU-V-16A/B (CC) as necessary to maintain pressurizer level ◆ Verifies proper automatic response of pressurizer heaters and spray valve (RC-V-1) to decreasing RCS pressure

NRC RO OPERATIONAL
SIMULATOR SCENARIO No. 3

Examiner Notes and Actions		Expected Operator Actions
	3.4	BOP - Responds to failed MFW valve d/p instrument per H-3-2 as follows: (on CC) ◆ Transfers FW-P-1B ICS station to HAND ◆ Adjusts FW-P-1B ICS station demand as necessary to stabilize MFW flows ◆ Selects alternate B-train MFW valve d/p transmitter, SP11B-DPT1, by depressing its SASS selector pushbutton
SHIFT FOREMAN: After secondary CRO has diagnosed MFW valve d/p instrument failure and initiated corrective action to control FW-P-1B, implement H-3-2 alarm response and verify or direct actions as necessary.		
	3.5	BOP - Performs or verifies actions per H-3-2 as directed by the Shift Foreman.
	3.6	BOP - Following selection of SP11B-DPT1, may transfer FW-P-1B back to auto at 35 psid on lower MFW valve d/p (zero error on FW-P-1B ICS station; or, may leave FW-P-1B in HAND for remainder of plant shutdown.
SHIFT FOREMAN: Continue plant shutdown per 1102-10 by directing secondary CRO to secure HD-P-1C.		
	3.7	BOP - Secures HP-P-1C using its extension control on CL as directed by the Shift Foreman.
SHIFT FOREMAN: Continue plant shutdown by directing primary CRO to lower reactor power to approximately 25%.		
	3.8	RO - Lowers ULD setting as necessary to obtain reduction in plant power level as directed by the Shift Foreman.

NRC RO OPERATIONAL
SIMULATOR SCENARIO No. 3

Examiner Notes and Actions	Expected Operator Actions
4. ICO: When reactor power is between 35 and 40%, or when directed by Examiner, activate EVENT #4 to cause main generator-turbine trip and initiate a main steam line break on A-SG in Intermediate Building.	
	4.1 BOP/RO - Diagnose turbine trip without reactor trip by alarm K-1-1 and numerous other panel indications (no alarm G-1-1).
	4.2 BOP/RO - Respond to the turbine trip without reactor trip per K-1-1 as follows: ♦ Verify ICS goes in TRACK (alarm H-2-2) ♦ Monitor power range digitals on CC, and verify control rod insertion (CRD panel and average control rod position on CC) to automatically decrease reactor power to minimum ICS demand (15%)
	4.3 BOP - Controls FW-P-1B ICS controller if in HAND as necessary to maintain MFW valve d/p for sufficient main feedwater flow, due to initial SG pressure increase.
	4.4 RO - Monitors RCS critical parameters and responds to the RCS cooldown and shrink as reactor power decreases: ♦ Operates MU-V-16A/B (CC) as necessary to maintain pressurizer level ♦ Verifies proper automatic response of pressurizer heaters and spray valve (RC-V-1) to decreasing RCS pressure

NRC RO OPERATIONAL
SIMULATOR SCENARIO No. 3

Examiner Notes and Actions		Expected Operator Actions
	4.5	BOP - Recognizes abnormal A-SG pressure response during power reduction and after reactor trip, by the following indications: ◆ A-SG pressure lower than B-SG pressure (CC and PCL) ◆ Demand on MS-V-3D/E/F ICS controller is lower than the demand for MS-V-3A/B/C controller
NOTE: Reactor may automatically trip due to numerous failures combined with main steam line break. **SHIFT FOREMAN**: After allowing time for CROs to respond and diagnose abnormal pressure response in A-SG, or if recommended by either CRO, direct RO to manually trip reactor due to steam leak per 1203-24.		
	4.6	RO/BOP - Manually trips reactor by depressing TRIP and DSS pushbuttons on CC.
EXAMINERS: Refer to copy of 1210-1 for expected operator actions.		
	4.7	RO - Verifies reactor is tripped per 1210-1 and commences 1210-1 immediate actions.
	4.8	BOP - Verifies main turbine is tripped per 1210-1.
EXAMINER: See Step 5.2 for actions expected to mitigate FW-V-5A failure to close.	4.9	BOP - Controls main feedwater per 1210-1 by controlling FW-P-1B in HAND as necessary, and recognizes FW-V-5A has no control power.

NRC RO OPERATIONAL
SIMULATOR SCENARIO No. 3

Examiner Notes and Actions		Expected Operator Actions
	4.10	RO - Performs 1210-1 action to start a second makeup pump and maintain pressurizer level as follows: ♦ Starts MU-P-1C, DC-P-1B, and DR-P-1B using their extension controls on CR ♦ Operates MU-V-16A/B/C/D (CC/CR) as necessary to maintain pressurizer level above 80 inches (CC - recorder and digital) ♦ Opens MU-V-14A/B (CC) if makeup tank level drops below 55 inches (CC digital) ♦ If pressurizer level drops below 20 inches, manually initiates HPI by depressing 1600# or 4# ES Manual Actuation pushbuttons on CC for Train-A and on CR for Train-B
5. **ICO**: Verify EVENT #5 activates to trip FW-V-5A breaker as it starts to close on reactor trip. **SHIFT FOREMAN**: After providing secondary CRO sufficient time to initiate A-SG isolation on his/her own, if necessary direct secondary CRO to isolate A-SG per 1210-3.	5.1	BOP/RO - Diagnose A-SG blow-down causing excessive primary to secondary heat transfer by following indications: ♦ Rapid drop in A-SG pressure (CC & PCL) ♦ Decreasing RCS temperatures below normal post-trip values (CC & PCL) ♦ Decreasing RCS pressure below normal post-trip value (CC & PCL)
NOTE: step 5.2 is a Critical Task. NOTE: FW-V-92A will automatically close by HSPS at less than 600 psig in A-SG, and this will isolate FW-V-16A.	**5.2**	**BOP - Performs actions necessary to isolate feedwater to A-SG per 1210-1 and 1210-3:** ♦ **Transfers FW-V-17A ICS controller (CC) to HAND and closes it by decreasing its demand to zero, <u>or</u>** ♦ **Reduces FW-P-1B speed using its motor speed changer (CL), or trips FW-P-1B using its TRIP pushbutton (CL)**

NRC RO OPERATIONAL
SIMULATOR SCENARIO No. 3

Examiner Notes and Actions	Expected Operator Actions
NOTE: Emergency feedwater will automatically actuate at less than 10 inches in A-SG as it steams down with MFW isolated, and EF-V-30A/D will automatically open to control A-SG level at 25 inches on startup range.	
	5.3 **BOP - Performs actions to completely isolate A-SG per 1210-3 as follows:** ♦ Closes or verifies closed MS-V-3D/E/F and MS-V-4A with their ICS controller on CC in HAND at zero (0) demand ♦ Closes MS-V-1A and 1B by depressing their CLOSE pushbuttons on CC ♦ Closes MS-V-2A by depressing its CLOSE pushbutton on CC ♦ **Transfers EF-V-30A and EF-V-30D controllers on CL to MANUAL, and sets their demands to zero (0)** ♦ May direct AO to locally close FW-V-5A
NOTE: Closing EF-V-30A and 30D is part of the Critical Task to isolate A-SG.	
ICO-ROLE PLAY: If directed to close FW-V-5A locally, display FWVFWV5A on MONITOR and set its value to zero (0) in 0.1 increments over a one minute ramp. When FW-V-5A is closed, report task complete to the control room.	
NOTE: When A-SG blows dry and no longer removes heat from RCS, the RCS will begin to reheat and repressurize until control of B-SG and HPI is assumed by the operators to stabilize RCS temperature & pressure.	

NRC RO OPERATIONAL
SIMULATOR SCENARIO No. 3

Examiner Notes and Actions		Expected Operator Actions
	5.4	BOP - When A-SG blows dry, performs actions necessary to establish B-SG as an adequate heat sink to minimize RCS reheat as follows: ♦ Adjusts (lowers) turbine header pressure setpoint (CC) to open MS-V-3A/B/C in auto, or transfers MS-V-3A/B/C ICS controller on CC to HAND and adjusts (raises) their demand, to lower B-SG pressure such that it becomes a heat sink and stabilizes RCS T-cold ♦ Provides main or emergency feedwater to B-SG as necessary to maintain sufficient level for heat transfer (≥ 25 " startup level)
6. **SHIFT FOREMAN**: Direct operators to clear ESAS signals as necessary to gain control of high pressure injection components, and direct primary CRO to control HPI as necessary to stabilize RCS pressure with at least 40°F subcooled margin.		
NOTE: When ESAS trains A and B are clear, all 3 sets of block loading sequence blue lamps will be extinguished for each train on PCR.	6.1	RO/BOP - When directed by Shift Foreman, clear ESAS signals as necessary for HPI throttling as follows: ♦ Bypass or reset 1600# auto channels, 3 on train-A and 3 on train-B, by depressing their bypass or reset pushbuttons on CC and CR ♦ Defeat and re-enable 1600# manual channels 3 on train-A and 3 on train-B, by depressing their defeat/enable pushbuttons on CC and CR

NRC RO OPERATIONAL
SIMULATOR SCENARIO No. 3

Examiner Notes and Actions		Expected Operator Actions
NOTE: 6.2 is a Critical Task. NOTE: MU-V-16C will NOT close upon demand by its CLOSE pushbutton on CR.	6.2	**RO - Operates makeup (HPI) system valves and pumps as necessary to control HPI:** ♦ **Closes or throttles as necessary MU-V-16A, 16B, 16C, and 16D if open** ♦ **Reopens MU-V-36 and 37 on CC prior to throttling below 100 gpm on MU-P-1A or MU-P-1C** ♦ **If open, recognizes MU-V-16C failure to close as indicated by its red OPEN lamp on CR** ♦ **Secures MU-P-1C using its extension control on CR to terminate B-train HPI flow if MU-V-16C is open** ♦ Operates MU-V-16A/B as necessary to maintain stable pressurizer level
SHIFT FOREMAN: Following all immediate actions to isolate A-SG and actions necessary to stabilize the plant, announce to team and commence 1210-1 verification. When required, announce to team and transition to 1210-3.		
EXAMINERS: Refer to copy of 1210-1.	6.3	RO/BOP - Verify 1210-1 immediate actions as read by Shift Foreman, and continue to monitor plant conditions.
EXAMINERS: Refer to copy of 1210-3.	6.4	BOP - Verifies 1210-3 immediate actions as read by Shift Foreman, and continue to monitor plant conditions.
SHIFT FOREMAN: Direct crew in follow-up actions of 1210-3, then when appropriate, announce to team and transition back to 1210-1.	6.5	RO/BOP - Perform applicable follow-up actions of 1210-3 as directed by Shift Foreman.

NRC RO OPERATIONAL
SIMULATOR SCENARIO No. 3

7.0 TERMINATION POINT

When all of the following conditions exist:

1. Examinees had opportunity to perform all critical tasks as designed.
2. Crew has transitioned back to 1210-1 from 1210-3.
3. Examiners agree to terminate.

ON-LINE MAINTENANCE RISK MANAGEMENT

ON-LINE RISK # 68 **Rev : 0**

RISK EVALUATION SUMMARY - MU-P-1B

IAW AP 1070 MU-P-1B has a Risk Ranking of Low (RAW of 1).
IAW AP 1070 the HPI Train "B" has a Risk Ranking of High (RAW of 26).

Risk Achievement Worth (RAW) is the factor increase in core damage frequency resulting when the structure, system, or component (SSC) is determined to be continuosly failed.

Assumptions:

Work involves inspection of MU-P-1B oil system. Scheduled duration of work is approximately 2 hours. MU-P-1A will be placed in service with DCCW supplying cooling.
Normal Makeup Pump suction and discharge valve line up will be maintained.

1. LIST THE TYPE OF RISK CONCERNS EVALUATED

Reduction in HPI capacity
Loss of redundancy of makeup and seal injection
HPI line break

2. LIST IMPORTANT SSCs WHICH NEED TO BE MAINTAINED OPERABLE

LPI Trains A and B
HPI Trains A and B
Building Spray Train A and B
EFW Train A and B
RB Emergency Cooling Train A and B
DC Power Train A and B
AC ES Power Train A and B
EG-Y-1A and EG-Y-1B
IC-P-1B and IC-P-1A

ICCW RCP Seal Cooling Function

3. LIST IMPORTANT MANUAL ACTIONS WHICH SHALL BE BRIEFED WITH THE APPROPRIATE PERSONNEL

MU-P-1A will be started and supply seal injection. There is no backup seal injection pump.

MU cross connects MU-V-76A and 76B will remain locked closed. It will be necessary to open these valves if MU-P-1C is started for seal injection.

If MU-P-1C must be started and the MU-P-1A/1C discharge cross connect valves open to provide seal injection, a 72 hour time clock will be in effect. IC/Makeup pump combination is to be evaluated with potential transfer of ICCW to IC-P-1A.

4. IDENTIFY CONTINGENCY PLANS OR COMPENSATORY ACTIONS USED TO REDUCE RISK

COMPENSATORY ACTIONS (PRIOR TO/IN PREPARATION FOR OUTAGE):

IC-P-1B will be placed in service to address vulnerability to loss of 1D 4160 Bus.

CONTINGENCY ACTIONS:

If MU-P-1B requires repair and will be out of service beyond the scheduled duration, and it is desired to provide backup seal injection capability, obtain Plant Operations Director or Director O & M approval, open the discharge cross connects, and commence a 72 hour TS time clock.

5. EVALUATION APPROVALS

- ○ 1. Risk found acceptable
- ● 2. Risk found acceptable with contingencies identified
- ○ 3. Risk unacceptable,

Signature of Evaluator: FOR TRAINING on 02/14/2000

Signature of Director: FOR TRAINING on 02/14/2000

CC: Job Package

ON-LINE MAINTENANCE RISK MANAGEMENT

ON-LINE RISK # 22 **Rev : 0**

RISK EVALUATION SUMMARY - IA-P-1A

Risk Achievement Worth (RAW) is the factor increase in core damage frequency resulting when the structure, system, or component (SSC) is determined to be continuosly failed.

Assumptions:

IA-P-1A will be removed from service for annual inspection/maintenance

1. LIST THE TYPE OF RISK CONCERNS EVALUATED

None provided that IA-P-4 remains in service and functions properly.
Infrequently run equipment may not support demands.

2. LIST IMPORTANT SSCs WHICH NEED TO BE MAINTAINED OPERABLE

IA-P-4
IA-P-1B
SA-P-1A
SA-P-1B
IA-Q-1

3. LIST IMPORTANT MANUAL ACTIONS WHICH SHALL BE BRIEFED WITH THE APPROPRIATE PERSONNEL

None

4. IDENTIFY CONTINGENCY PLANS OR COMPENSATORY ACTIONS USED TO REDUCE RISK

COMPENSATORY ACTIONS (PRIOR TO/IN PREPARATION FOR OUTAGE):

Verify IA and SA systems are aligned for normal operation, prior to removing IA-P-1A from service.

CONTINGENCY ACTIONS:

5. EVALUATION APPROVALS

- ● 1. Risk found acceptable
- ○ 2. Risk found acceptable with contingencies identified
- ○ 3. Risk unacceptable,

Signature of Evaluator: FOR TRAINING on 02/14/2000

Signature of Director: FOR TRAINING on 02/14/2000

CC: Job Package
Shift Supervisor Clipboard
Operations Department General Files
STA

NRC RO OPERATIONAL
SIMULATOR SCENARIO No. 4

**REACTOR STARTUP CONTINUES FROM 1E-8 AMPS,
LOSS OF 1A AUXILIARY TRANSFORMER, LOSS OF MAIN FEEDWATER,
AND OTSG TUBE RUPTURE CAUSING LOSS OF SUBCOOLED MARGIN**

DEVELOPED BY/DATE: 12-17-99

REVIEWED BY/DATE: 12/20/99

APPROVED BY/DATE: 12/20/99
(OPERATIONS TRAINING MANAGER)

NRC RO OPERATIONAL
SIMULATOR SCENARIO No. 4

SCENARIO CHANGE HISTORY PAGE

REVISION	DATE	REFERENCE TITLE	DESCRIPTION (Include AI # if appropriate)

NRC RO OPERATIONAL
SIMULATOR SCENARIO No. 4

1.0 GENERAL DESCRIPTION OF SCENARIO

Reactor at 1E-8 amps during a xenon-free plant startup at MOC.

Reactor power is increased to 5%.

NI-5 (selected) fails to come on scale.

FW-P-1A is transferred from auxiliary to main steam prior to 5% power.

At 5% power, selected B-SG startup level transmitter fails low, causing FW-V-16B to open.

1A auxiliary transformer trips causing loss trip of MU-P-1B and loss of RC makeup/seal injection.

FW-P-1A motor speed changer malfunction causes loss of main feedwater.

EF-V-30B/C do not automatically open to supply B-SG with emergency feedwater.

A tube rupture occurs on B-SG resulting in loss of required RCS subcooled margin.

RC-P-1B can not be secured by its extension control on CC.

RCS subcooled margin will be regained

RCS natural circulation must be established.

Plant cooldown is commenced per 1210-5.

Estimated scenario time - 70 minutes. **3 Critical Tasks**

2.0 REFERENCES

A. 10 CFR 55.45 Operating Tests, (a) Content (3), (4), (5), (6), (7), (8), (9), (12), (13)

B. PROCEDURES

1102-2	Plant Startup (sign-off copy required for crew)
1106-1	Turbine Generator (sign-off copy required for crew)
1106-2	Condensate System (sign-off copy required for crew)
1106-3	Feedwater System (sign-off copy required for crew)
1203-15	Loss of RC Makeup/Seal Injection
1202-38	Nuclear Services River Water Failure
1203-19	River Water System Failure (DR/SR)
1203-20	Nuclear Services Closed Cooling System Failure
1210-5	OTSG Tube Leakage
1202-12	Excessive Radiation Levels
1210-1	Reactor Trip (copies required for examiners)
1210-2	Loss of 25°F Subcooled Margin (copies required for examiners)
1210-10	Abnormal Transients Rules, Guides, and Graphs

Alarm Responses

NRC RO OPERATIONAL SIMULATOR SCENARIO No. 4

3.0 TASKS

0010250101	Operate control rods manually at power
341C020101	Perform a plant startup
3418000101	Perform plant power changes
0000340501	Respond to a loss of power range nuclear instrument
0598040101	Shift steam supply to FW-P-1A/B between auxiliary and main steam
0158020401	Respond to a SASS mismatch/actuation
0590050101	Operate the feedwater regulating valves in manual and automatic
0008320501	Respond to loss of a 4160V bus
0000220501	Respond to a loss of reactor coolant makeup
0008210501	Respond to loss of RCP seal injection
0000540501	Respond to a loss of main feedwater
0610010401*	**Perform required actions if EFW system does not operate properly**
000C220501	Respond to OTSG tube leak
0000610501	Respond to excessive radiation levels
0000070501	Respond to a reactor trip as the primary CRO
0000080501	Respond to a reactor trip as the secondary CRO
000C190501*	**Respond to loss of 25°F subcooled margin**
0020100101	Establish natural circulation
0130040101	Bypass or defeat an ES channel
004C040101*	**Throttle high pressure injection flow**

*** Critical Task**

NRC RO OPERATIONAL
SIMULATOR SCENARIO No. 4

4.0 SIMULATOR INITIALIZATION

A. IC08 Reactor critical at 1E-8 amps, MOC, xenon-free.

Ensure MSK2609A = 214.7, then place simulation in RUN and ensure the following:

1. Main Feedwater Pump is running on auxiliary steam (AS-V-5A open)
2. Gland steam is supplied by auxiliary steam (AS-V-8 open)
3. Transfer all operating ventilation fans on H&V panel to A-train.

B. EVENT TRIGGERS

None

C. MALFUNCTIONS

NI19A	NI-5 linear amp fails low; insert immediately.
RC23A	B-SG startup level transmitter (LT-1054) failure; insert at 0% severity over 300 second ramp on EVENT #3.
ED02D	Auxiliary transformer 1A fault; insert on EVENT #4.
TH15B	B-SG tube leak; insert at 20% severity over 100 second ramp on EVENT #6.

D. REMOTE FUNCTIONS

ICR03	EF-V-30B/C startup level setpoint; insert value of zero (0) immediately.

E. OVERRIDES

01A5S07-ZDIMSCA(3) SLOLO FW-P-1A MSC SWITCH; insert ON on EVENT #5.

02A3S16-ZDICSRCP1B(1) PTL RC-P-1B CS; insert OFF immediately.

02A3S16-ZDICSRCP1B(2) STP RC-P-1B CS; insert OFF immediately.

F. MONITOR

Set MSK2609A = 214.7 immediately (auxiliary steam pressure).

NRC RO OPERATIONAL
SIMULATOR SCENARIO No. 4

5.0 SCENARIO PREVIEW

A. EXAMINER PREVIEW

Reactor critical at 1E-8 amps during a xenon-free plant startup at MOC. Startup to continue.

1. Primary CRO will operate control rods to increase reactor power to 5% per 1102-2. NI-5 will not come on scale as power is increased into power range, requiring NI-6 to be selected for ICS control per H-3-2 prior to transfer of Diamond to auto per 1102-2.
2. Prior to reaching 5% reactor power per 1102-2, the secondary CRO will transfer FW-P-1A turbine steam supply from auxiliary to main steam per 1106-3.
3. Selected B-SG startup level transmitter (LT-1054) fails low (0") over 300 seconds, causing FW-V-16B to open in auto and eventually a SASS mismatch alarm. The secondary CRO must respond to the SASS mismatch per H-3-2, by assuming hand control of FW-V-16B, selecting a good level transmitter, then transferring FW-V-16B back to auto.
4. A failed fault pressure switch trips 1A auxiliary transformer and 230KV bus #8, causing fast transfer of BOP buses, under-voltage on 1E 4160V ES bus, and trip of numerous components including MU-P-1B. The primary CRO must respond to the loss of RC makeup and RCP seal injection per 1203-15. Both CROs must respond to other component trips per the appropriate procedure.
5. An electrical short in the motor speed changer for FW-P-1A will cause it to run off line, resulting in a loss of main feedwater. When EFW actuates, EF-V-30B/C will not automatically open and control level in B-SG. The secondary CRO must manually initiate and control EFW flow to B-SG to provide adequate heat transfer. **(CT)**
6. A multiple tube failure occurs in B-SG, resulting in a loss of 25°F subcooled margin. The primary CRO must secure reactor coolant pumps per 1210-1/1210-2, but RC-P-1B extension control will not function. The primary CRO must de-energize 1B 6900V bus to secure RC-P-1B. **(CT)**
7. Eventually RCS subcooled margin will be regained, requiring the primary CRO to throttle HPI per 1210-10. **(CT)**

   The secondary CRO will establish RCS natural circulation core cooling, and a plant cooldown per 1210-5 will be commenced.

NRC RO OPERATIONAL
SIMULATOR SCENARIO No. 4

B. SHIFT BRIEFING

1. Reactor is critical at 1E-8 amps during a xenon-free startup at 300 EFPD.

2. Critical data has been obtained and 1103-8, Approach to Criticality, is complete.

3. The plant tripped 80 hours ago due to a main generator relay failure.

4. FW-P-1A and gland steam are currently supplied by the auxiliary steam system.

5. B-RCBT is on sample recirculation at this time.

5. Continue plant startup by increasing power reactor power per 1102-2.

NRC RO OPERATIONAL
SIMULATOR SCENARIO No. 4

6.0 SEQUENCE OF EVENTS

Examiner Notes and Actions	Expected Operator Actions
♦ **ICO**: Initialize the simulator per Section 4.0.	
♦ **IPOI**: Assign team positions and conduct the SHIFT BRIEFING per Section 5.B.	♦ Assume assigned team positions.
♦ Provide Shift Foreman with sign-off copies of 1102-2, 1106-1, 1106-2, and 1106-3.	♦ Take turnover and review plant status.
♦ Allow crew 3-5 minutes to take turnover and assume the watch.	♦ Assume the watch and inform examiner.
1. **SHIFT FOREMAN**: Direct primary CRO to increase reactor power to 5% per 1102-2. Remind primary CRO that power ramp limit is 30%/hour per 1102-2, Enclosure 4.	
	1.1 RO – Operates CRD panel (CC) to withdraw control rods and increase reactor power while: ♦ Monitoring power level and startup rate on NI-3 and NI-4 (intermediate range) (CC) ♦ Monitoring RCS critical parameters ♦ Complying with MMRs (<30%/hour)
NOTE: Point of adding heat occurs between 1E-7 and 1E-6 amps on NI-3 and NI-4.	
	1.2 RO – Recognizes and announces when point of adding heat is reached as indicated by: ♦ Decrease in startup rate on NI-3/4 (CC) ♦ Increase in RCS temperatures (CC & PCL) ♦ Increase in pressurizer and makeup tank levels (CC) ♦ Decrease in RCS makeup flowrate (CC)

NRC RO OPERATIONAL
SIMULATOR SCENARIO No. 4

Examiner Notes and Actions		Expected Operator Actions
	1.3	BOP – Monitors secondary critical parameters as reactor power is increased, and: ◆ Verifies automatic response of MS-V-3s to control SG pressures at 895 psig (CC) ◆ Verifies automatic response of FW-V-16s to control SG levels at 25" (CC) ◆ Operates FW-P-1A ICS station demand to maintain ≥ 35 psid MFW valve d/p (CL)
SHIFT FOREMAN: Direct primary CRO to maintain pressurizer level within Figure 1 of 1102-2, bleeding to C-RCBT as necessary. Provide 1102-2, Figure 1 to primary CRO.		
	1.4	RO – Operates the following makeup and LWDS system components as necessary to maintain pressurizer level increase within Figure 1 as T-ave increases, and to maintain makeup tank level within Figure 1 of 1104-2: ◆ MU-V-17 ICS station setpoint (CC) ◆ Bleed Tank Select switch on LWDS ◆ MU-V-8 (THRU/BLEED) pushbuttons (CC) ◆ MU-V-5 demand setpoint (CC)
NOTE: NI-5 will NOT come on scale when reactor power increases into power range.		
	1.5	RO - Recognizes and reports failure of NI-5 to come on scale as indicated by comparison to NI-6, 7, and 8.
SHIFT FOREMAN: When primary CRO identifies and reports NI-5 problem, inform CRO that you will evaluate Tech. Specs. Then, after reading Tech. Spec. requirement for NI operability, direct primary CRO to select NI-6 for control and continue power escalation.		

NRC RO OPERATIONAL
SIMULATOR SCENARIO No. 4

Examiner Notes and Actions	Expected Operator Actions
NOTE: As reactor power is increased to 5%, a SASS mismatch will eventually occur (H-3-2) on the NI channel.	
	1.6 RO - Selects NI-6 for ICS control by depressing its SASS select pushbutton on CC, prior to transferring Diamond panel to auto per H-3-2.
SHIFT FOREMAN: Direct secondary CRO to place A-RPS channel in Manual Bypass due to NI-5 failure, and direct third CRO to make a log entry for the RPS channel to manual bypass.	
	1.7 BOP - Places A-RPS in manual bypass: ♦ Obtains RPS manual bypass key from controlled key locker ♦ Opens left door on A-RPS cabinet ♦ Inserts manual bypass key into reactor trip module and turns key 90° clockwise ♦ Acknowledges alarm G-3-1
	1.8 RO - Operates control rods to continue reactor power increase towards 5% on NI-6, 7, and 8.
2. **SHIFT FOREMAN**: As reactor power is increased but prior to 5%, direct secondary CRO to transfer FW-P-1A steam supply from auxiliary to main steam per 1106-3.	
	2.1 BOP – Transfers FW-P-1A steam supply per 1106-3 as follows: ♦ Directs auxiliary operator to slowly close AS-V-5A in plant ♦ Monitors MFW valve d/p (CL) and FW-P-1A control valve positions (PLF) ♦ Controls FW-P-1A ICS station demand as necessary to maintain MFW valve d/p greater than 70 psid per 1106-3

NRC RO OPERATIONAL
SIMULATOR SCENARIO No. 4

Examiner Notes and Actions	Expected Operator Actions
3. **ICO**: When reactor power is approximately 5%, or when directed by Examiner, activate EVENT #3 to cause selected B-SG startup level instrument (LT-1054) to fail low (0") over 300 seconds.	
	3.1 BOP – Recognizes increase in B-SG feed flow (CC) and real startup level on digital (CC).
	3.2 BOP – Recognizes increase in demand on FW-V-16B ICS station and valve position (CC).
NOTE: Eventually a SASS mismatch (H-3-2) will occur on the B-SG startup level channel.	
	3.3 BOP – Transfers FW-V-16B ICS station (CC) to HAND, and controls demand as necessary to control B-SG feed flow and return startup level to 25" on CC digital.
SHIFT FOREMAN: Implement H-3-2 after secondary CRO performs initial manual actions, and verify/direct the actions therein.	
	3.4 RO – Responds to the MFW flow transient effects on RCS temperature, pressure, inventory, and reactor power. ◆ Verifies automatic response of MU-V-17 ◆ Verifies automatic response or RC-V-1 (pressurizer spray on CC) ◆ Verifies automatic response of PZR heaters on CR
	3.5 BOP – Selects alternate B-SG startup level instrument per H-3-2, by depressing its SASS pushbutton on CC.
	3.6 BOP – Obtains zero (0) error and transfers FW-V-16B ICS station back to auto.

NRC RO OPERATIONAL
SIMULATOR SCENARIO No. 4

Examiner Notes and Actions	Expected Operator Actions
SHIFT FOREMAN: Direct secondary CRO in follow-up actions for SASS Mismatch per H-3-2.	
	3.7 BOP – Performs follow-up actions of H-3-2 as directed by the Shift Foreman.
4. **ICO**: After FW-V-16B is back in automatic, or when directed by Examiner, activate EVENT #4 to cause 230KV bus-8 trip, fast transfer of BOP buses, under-voltage on 1E 4160V bus, and trip of numerous B-train components including: MU-P-1B, NS-P-1C, NR-P-1C, & SR-P-1B.	
	4.1 BOP/RO – Diagnose loss of 230KV bus-8 and 1E 4160V bus under-voltage by the following: ◆ Alarms B-1-1, B-2-1, NN-1-1, & others ◆ One set of control room overhead lights goes off for 10 seconds ◆ Numerous component trips
	4.2 BOP/RO – Recognize by panel indications and overhead lights re-energizing that EG-Y-1B has re-energized the 1E 4160V bus.
	4.3 RO - Diagnoses MU-P-1B trip by alarms and panel indications, and responds to the loss of RC makeup and seal injection per 1203-15: ◆ Transfer MU-V-32 (seal injection flow control valve) control station on CC to HAND, and reduce its demand to zero to close MU-V-32 ◆ Start MU-P-1A, DC-P-1A, and DR-P-1A using their extension controls on CC ◆ Reopen MU-V-32 by raising its controller demand to re-establish RCP seal injection flow on MU42-FI (CC)

NRC RO OPERATIONAL
SIMULATOR SCENARIO No. 4

Examiner Notes and Actions	Expected Operator Actions
	4.4 RO - Obtains 38 gpm seal injection flow on MU42-FI, checks MU-V-32 control station error at zero, and transfers MU-V-32 control station back to AUTO.
	4.5 BOP - Recognizes trip of SR-P-1B by its breaker status lamps above its extension control on CL (green and amber lamps), and verifies or starts SR-P-1B or 1C per 1203-19.
	4.6 RO - Recognizes trip of NR-P-1C and NS-P-1C by their breaker status lamps above their extension controls on CR (green and amber lamps), and verifies start of NR-P-1B (CR) per 1202-38, and verifies start of NS-P-1B (CC) per 1203-21.
SHIFT FOREMAN: After sufficient time for the CROs to have performed immediate actions of 1203-15, 1202-38, 1203-19, and 1203-20, implement each procedure and verify or direct the actions.	
	4.7 BOP/RO - Perform verification of applicable emergency and abnormal procedures as read by Shift Foreman.
	4.8 BOP/RO - Perform follow-up actions of applicable emergency and abnormal procedures as directed by the Shift Foreman.
SHIFT FOREMAN: Implement appropriate alarm response procedures and direct CRO actions.	4.9 BOP/RO - Perform actions of alarm responses as directed by Shift Foreman.

NRC RO OPERATIONAL
SIMULATOR SCENARIO No. 4

Examiner Notes and Actions

5. ICO: After all emergency and abnormal procedure actions have been verified for loss of 230KV bus-8, or when directed by Examiner, activate EVENT #5 to cause FW-P-1A motor speed changer short and loss of main feedwater.

Expected Operator Actions

5.1 BOP - Diagnose FW-P-1A problem and loss of main feedwater by the following:

- Low MFW valve d/p alarm M-1-5
- Decreasing speed and discharge pressure on FW-P-1A (CL)
- Low SG levels and alarms J-2-3 & J-2-4
- No MFW flow to SG's indicated on CC

5.2 RO - Responds to the reduced RCS heat removal as follows:

- Monitors increase in RCS temperature and pressure (CC and PCL)
- Verifies automatic response of pressurizer spray valve, RC-V-1, to open (CC)
- Transfers RC-V-1 to MAN using its mode selector switch on CC, and fully opens RC-V-1 using its OPEN pushbutton on CC per G-3-8
- Transfers RC-V-1 back to AUTO using its mode selector switch on CC

NOTE: Unless FW-P-1A is manually tripped, EFW will only actuate on low-low OTSG levels (10"). But, EF-V-30B and 30C will not open automatically to provide EFW flow to B-SG.

NRC RO OPERATIONAL
SIMULATOR SCENARIO No. 4

Examiner Notes and Actions	Expected Operator Actions
	5.3 BOP - Responds to EFW actuation per 1210-10 as follows: ◆ Verifies EF-P-2A, 2B and EF-P-1 start by indications of breaker status lamps above EF-P-2A/2B extension controls (CL & CC), and EF-P-1 speed indication on CC ◆ Verifies EF-P-2A, 2B, and EF-P-1 discharge pressures (CC) are greater than SG pressures (CC & PCL) ◆ Verifies EF-V-30A/D and EF-V-30B/C open as required to provide EFW flow to both steam generators (CL & CC)
NOTE: Step 5.4 is a Critical Task.	**5.4 BOP - Diagnoses no EFW flow to B-SG (CC) and responds per 1210-10:** ◆ **Transfers EF-V-30B or EF-V-30C controller to manual (CC)** ◆ **Increases EF-V-30B or 30C controller demand to open at least one valve and supply EFW flow to B-SG**
SHIFT FOREMAN: If reactor is not manually tripped by CROs, or when either CRO recommends a manual reactor trip, direct the primary CRO to manually trip the reactor.	
	5.5 RO - Manually trips reactor by depressing TRIP and DSS pushbuttons on CC, and commences 1210-1 immediate actions.
EXAMINERS: Refer to copy of 1210-1.	5.6 BOP - Commences 1210-1 immediate actions for the reactor trip.

NRC RO OPERATIONAL
SIMULATOR SCENARIO No. 4

Examiner Notes and Actions	Expected Operator Actions
6. ICO: After reactor is tripped or when directed by examiner, activate EVENT #6 to initiate a large tube rupture in B-SG which will eventually result in loss of required subcooled margin.	
	6.1 RO/BOP - Diagnose large RCS leak in B-SG by the following indications: ◆ Radiation monitor alarms (C-1-1) on RM-A-5/15/5G-Hi, and RM-G-27 (PRF) ◆ Rapid loss of pressurizer level (CC) and drop in RCS pressure (CC & PCL) ◆ High makeup flowrate (CC) & D-3-1 ◆ Increase in B-SG level (CC)
	6.2 RO - Performs actions in response to low pressurizer level per 1210-1 as follows, or verifies automatic 1600# ESAS actuation: ◆ Opens MU-V-217, MU-V-16A/16B using their OPEN pushbuttons on CC ◆ Starts MU-P-1C, DC-P-1B, and DR-P-1B using their extension controls on CR ◆ Opens MU-V-16C/16D using their OPEN pushbuttons on CR ◆ Manually initiates full HPI by depressing 1600# or 4# Manual ES pushbuttons on CC for Train-A and on CR for Train-B, if pressurizer level drops below 20 inches.
NOTE: 1210-5 allows A-SG to be preferentially fed for loss of subcooled margin as long as HPI exists and the affected B-SG level is rising due to the tube rupture.	
	6.3 BOP - Operates EF-V-30B/C controllers (CC) as necessary to terminate EFW flow to B-SG as its level increases due to tube rupture (CC).

NRC RO OPERATIONAL
SIMULATOR SCENARIO No. 4

Examiner Notes and Actions		Expected Operator Actions
NOTE: Step 6.4 is a Critical Task.	6.4	**RO - Diagnoses loss of 25°F subcooled margin by alarm G-1-8 and PCL meters, and responds per 1210-2:** ♦ **Secures RC-P-1A, 1B, 1C, and 1D using their extension controls on CC, within 2 minutes per 1210-10 rule.** ♦ **Recognizes failure of RC-P-1B to trip by its extension control, and de-energizes 1B 6900V bus by opening breaker 1SB-02 using its extension control on PR** ♦ **Verifies or manually initiates full HPI as indicated on MU-FI-1126 & 1127 (CC) and MU-FI 1128 & 1129 (CR)**
	6.5	BOP - Responds to loss of subcooled margin per 1210-2: ♦ Verifies EF-V-30A or 30D responds in auto to provide EFW flow to A-SG to raise its level towards 75-85%, or ♦ Manually controls EF-V-30A or 30D to provide EFW flow to A-SG and raise its level to 75-85%
SHIFT FOREMAN: After 1210-1 and 1210-2 immediate actions have been performed by CROs, verify 1210-1 and 1210-2 immediate actions, then commence and direct 1210-2 follow-up actions.		
	6.6	RO/BOP - Verify 1210-1 and 1210-2 immediate actions as led by Shift Foreman.
EXAMINERS: Refer to copy of 1210-2 for follow-up actions.		

NRC RO OPERATIONAL
SIMULATOR SCENARIO No. 4

Examiner Notes and Actions		Expected Operator Actions
	6.7	RO - Operates valve controls (CC) as directed by Shift Foreman to isolate possible sources of leakage per 1210-2 follow-up step 2.2.
SHIFT FOREMAN: If secondary CRO is still feeding B-SG with EFW, direct the CRO to stop feeding B-SG as long as its level is rising due to the tube rupture.		
	6.8	BOP - Preferentially feeds A-SG with EFW as B-SG level rises due to tube rupture, and as long as HPI flow exists, per 1210-2; and stops feeding B-SG with EFW by closing EF-V-30B/C.
SHIFT FOREMAN: Announce and transition from 1210-2 follow-up actions to 1210-5 at the appropriate point.		
	6.9	RO/BOP - Perform 1210-5 follow-up actions as directed by the Shift Foreman.
	6.10	BOP - Per 1210-5: Operates MS-V-3 ICS controllers (CC) as necessary to steam both OTSG's to reduce incore temperatures below 540°F, and to maintain B-SG level ≤ 85% on the operating range (CC).
	6.11	BOP - Secures EF-P-1 when directed by Shift Foreman per 1210-5 as follows: ♦ Defeats any active HSPS-EFW actuation signals using ENABLE/DEFEAT switches for Train-A on CL and for Train-B on CC ♦ Closes MS-V-13A and 13B by depressing their CLOSE pushbuttons on CC

NRC RO OPERATIONAL
SIMULATOR SCENARIO No. 4

Examiner Notes and Actions

NOTE: As RCS pressure decreases toward B-SG pressure, the tube leakrate will decrease and RCS subcooled margin will be regained.

SHIFT FOREMAN: When at least 25°F subcooled margin has been regained, direct CROs to clear ESAS signals for throttling HPI.

Expected Operator Actions

6.12 RO/BOP - When directed by Shift Foreman, clear ESAS signals for HPI throttling as follows (assuming only 1600# auto and manual ES actuation signals are present):

- Bypass 1600# (and 500# if Bypass Permits exist) auto channels, 3 on train-A and 3 on train-B, by depressing their BYPASS pushbuttons on CC and CR
- Defeat and reset 1600# manual channels, 3 on train-A and 3 on train-B, by depressing their DEFEAT/ENABLE pushbuttons on CC and CR

NOTE: When ESAS trains A and B are clear, all 3 sets of block loading sequence blue lamps will be extinguished for each train on PCR.

SHIFT FOREMAN: Direct primary CRO to throttle HPI and control RCS subcooled margin between 30°F and 70°F, to comply with 1210-10 PTS Guideline.

NRC RO OPERATIONAL
SIMULATOR SCENARIO No. 4

Examiner Notes and Actions	Expected Operator Actions
NOTE: Step 6.13 is a Critical Task.	**6.13 RO - When directed by Shift Foreman, throttles HPI for PTS concerns per 1210-10 as follows:** **♦ Verifies that at least 25°F subcooled margin has been regained as indicated by PPC point C4006** **♦ Operates MU-V-16A, 16B, 16C, and 16D using their pushbuttons on CC and CR as necessary to control HPI flows** **♦ Reopens MU-V-36 and MU-V-37 using their pushbuttons on CC prior to throttling below 100 gpm/HPI pump as indicated on MU-FI-1126 and 1127 on CC for MU-P-1A, and MU-FI-1128 and 1129 on CR for MU-P-1C**
SHIFT FOREMAN: Direct CROs to stabilize RCS pressure and control incore temperatures, and prepare to commence plant cooldown per 1210-5.	
	6.14 BOP - Performs actions necessary to obtain RCS natural circulation via A-SG and control incore temperatures if possible: ♦ Operates EF-V-30A or 30D controller (CL) to continue A-SG level increase toward required level setpoint (50% if at least 25°F subcooled margin is regained) ♦ Operates MS-V-3 ICS controllers (CC) to steam both steam generators enough to maintain then as heat sinks relative to RCS temperatures
	6.15 RO - Throttles HPI as necessary to stabilize RCS pressure with 30-70°F subcooled margin.

NRC RO OPERATIONAL
SIMULATOR SCENARIO No. 4

7.0 TERMINATION POINT

When all of the following conditions exist:

1. Examinees had opportunity to perform all critical tasks as designed.
2. RCS pressure and core temperatures are under control.
3. Crew is preparing to commence plant cooldown per 1210-5.
4. Examiners agree to terminate.

TMI-1 OPERATOR TRAINING REQUALIFICATION PROGRAM

JOB PERFORMANCE MEASURE

POSITION: SRO/RO/AO

TITLE:	Shutdown Margin Calculation
TASK NUMBER:	0010040101
EVALUATION METHOD:	PERFORM: X SIMULATE: ____
EVALUATION LOCATION:	SIMULATOR: ____ IN-PLANT: ____ CONTROL ROOM: X
APPROXIMATE COMPLETION TIME:	Minutes: 20
IMPORTANCE RATING (TIF):	NRC 2.8 K/A 2.1.25 TMI 2.6
TOOLS AND EQUIPMENT:	Calculator and Ruler OP 1103-15A Rev. 28
EXAMINEE REFERENCES:	OP 1103-15A Shutdown Margin and Reactivity Balance Rev. 28
10CFR55.41:	(a)(10).

	SIGNATURE	DATE
Submitted By:	[signature]	11/29/99
Validated By:	[signature]	11-30-99
Reviewed by: Lead Instructor, Operator Training OR Lead Instructor, Simulator Training	[signature]	11/30/99
Operations Training Manager	[signature]	12/14/99
Approved By: Plant Operations Director	[signature]	12/17/99

SIMULATOR CONDITIONS: N/A

EXAMINER PREVIEW:

The sequence of events which should be followed in the conduct of this JPM is as follows:

1. Read or otherwise inform the Examinee of the information contained in the "EXAMINEE PREVIEW" section of this JPM.
2. Inform the Examinee of the TASK CONDITIONS.
3. Begin the cueing sequence as described in the EXAMINER CUES section.

A certain amount of liberty (questioning or cueing beyond the bounds of the "EXAMINER CUES") may be taken by the Examiner in trying to extract the requisite information from the Examinee, however, care must be taken to ensure that you do not COACH the Examinee.

To complete this task successfully, the Examinee must complete each critical element (an element of the task which, if omitted or performed incorrectly, would result in a failure to meet the "TASK STANDARD") correctly.

TASK STANDARDS: Examinee Calculates the SDM within tolerances described within this JPM.

This sheet is available for the examinee to review

EXAMINEE PREVIEW:

For this event you are assigned the duties of the third CRO. The instructor/examiner will act as the SS.

When you are told to begin, you will respond to the cues or indications which the Examiner will provide to you either verbally or by the simulator.

TASK CONDITIONS:

The reactor is at 100% Power.

400 EFPD

Group 8 rod position: 30% WD

RCS Boron: 770 ppm

Boron Depletion factor: 1.0

PPC Xenon: -2.4% $\Delta k/k$

It has been determined that Group 7 Rod 4 is stuck at 92% WD and cannot be moved.

EXAMINER CUES	EXAMINEE ACTIONS	STANDARD
Instruct the examinee to calculate a Shutdown Margin for the current plant conditions. Examinee does not have to complete Enclosure 4 for this JPM. **NOTE:** Allowances Fig. 1 ± 0.1% Δk/k Fig. 2A ± 0.005%Δk/k Fig. 3 ± 0.25ppmB/%Δk/k Max Error ±0.355% Δk/k	*1. Examinee obtains a copy of OP 1103-15A and using Enclosure 1 calculates the SDM.	1. The examinee calculates the SDM within the allowable tolerances provided with this JPM. _____ SAT

JPM may be terminated after completion of calculation.

(*) Denotes Critical Element.

EVALUATION: SAT:_____ UNSAT:_____

JPM CHANGE HISTORY PAGE

REVISION	DATE	REFERENCE TITLE	DESCRIPTION (Include AI # if Appropriate)

- Key

ENCLOSURE 1

Shutdown Margin Calculation Data Sheet

NOTE

Refer to attached Enclosure 1 Instructions to complete the Data Sheet.

I. CALCULATION IS FOR A SDM AT: DATE _____ TIME _____

1. TAVE (Assume TAVE = 532°F) 532 °F
2. CYCLE BURNUP 400 EFPD
3. a. MEASURED BORON CONCENTRATION 770 ppmB
   b. BORON DEPLETION CORRECTION FACTOR 1.0
   (NAS, Control Room Log, Nuclear Engineering)
   c. CORRECTED BORON CONCENTRATION (3a x 3b) = 770 ppmB
4. CONTROL ROD GROUP 8 POSITION 30 % WD
5. EXCESS REACTIVITY (FIG. 1) 5.1 % Δk/k
6. CRG 8 REACTIVITY WORTH (FIG. 2A) -0.122 % Δk/k
7. BOREON REACTIVITY WORTH
   7a. HZP Inverse Boron Worth (FIG. 3) 135.6 ppmB/%Δk/k
   7b. Boron Worth -5.68 % Δk/k
   [(ppmB)/(HZP Inverse Boron Worth)] * (-1)
   #3c #7a
8. XENON REACTIVITY WORTH (PPC, Nuclear Engr, FIG. 4) -2.4 % Δk/k
9. SAMARIUM AND PLUTONIUM BUILDUP REACTIVITY WORTH (FIG. 5)
   9a. If shutdown: Time since last shutdown 0 HRS
   9b. Reactivity due to samarium and plutonium buildup 0 % Δk/k
10. INOPERABLE CONTROL RODS THAT ARE NOT FULLY INSERTED
   10a. No. of known inoperable rods (>0%WD) 1
   10b. Total inoperable rod worth (Enclosure 4) 1.43 % Δk/k
   (Figure 1 includes stuck rod as required by T.S.)
11. SHUTDOWN MARGIN -1.672 % Δk/k
   EXCESS + CRG 8 + BORON + XENON + SAM + INOP ROD =
   #5 #6 #7b #8 #9b #10b

CAUTION

Verification of shutdown margin more negative than –1% Δk/k **DOES NOT** imply 1% Δk/k subcriticality.

CALCULATED BY _____ DATE/TIME _____

ROVED (SRO) BY _____ DATE/TIME _____

Send to Operations Engineer for filing: Copy to Manager, Shift Engineering

TMI-1 OPERATOR TRAINING REQUALIFICATION PROGRAM

JOB PERFORMANCE MEASURE

POSITION: SRO/RO/AO

TITLE:	RCS PPC Computer Leak Rate Calculation
TASK NUMBER:	0020010201
EVALUATION METHOD:	PERFORM: X SIMULATE: ____
EVALUATION LOCATION:	SIMULATOR: X IN-PLANT: ____ CONTROL ROOM: ____
APPROXIMATE COMPLETION TIME:	Minutes: 70 Minutes
IMPORTANCE RATING (TIF):	TMI: RO 2.49 NRC K/A 2.1.19 RO 3.0
TOOLS AND EQUIPMENT:	Plant Process Computer
EXAMINEE REFERENCES:	1303-1.1 Reactor Coolant System Leak Rate Rev. 35
10CFR55.45:	(a)(12).

	SIGNATURE	DATE
Submitted By:	[signature]	11/24/99
Validated By:	[signature]	11/24/99
Reviewed by: Lead Instructor, Operator Training OR Lead Instructor, Simulator Training	[signature]	11/24/99
Operations Training Manager	[signature]	12/14/99
Approved By: Plant Operations Director	[signature]	12/17/99

SIMULATOR CONDITIONS:

IC16 MOC
Set makeup tank level to obtain approximately 87" @ 33 psig using monitor point MUMMT = 28,000, immediately, MUT pressure should be approximately 33 psig

Insert Malfunction TH02A at 1% severity, immediately.

Turn on PPC Printer GPU Tag 17528

EXAMINER PREVIEW:

The sequence of events which should be followed in the conduct of this JPM is as follows:

1. Read or otherwise inform the Examinee of the information contained in the "EXAMINEE PREVIEW" section of this JPM.
2. Inform the Examinee of the TASK CONDITIONS.
3. Allow the Examinee 2-3 minutes to scan the Console.
4. Begin the cueing sequence as described in the EXAMINER CUES section.

A certain amount of liberty (questioning or cueing beyond the bounds of the "EXAMINER CUES") may be taken by the Examiner in trying to extract the requisite information from the Examinee, however, care must be taken to ensure that you do not COACH the Examinee.

To complete this task successfully, the Examinee must complete each critical element (an element of the task which, if omitted or performed incorrectly, would result in a failure to meet the "TASK STANDARD") correctly.

TASK STANDARDS:

Examinee successfully uses the PPC to enter a RCS leak rate and print the results with the RCS unidentified leak rate approximately 2.1 GPM. The examinee identifies that this leak rate value is in excess of Tech Spec limits (TS 3.1.6.2).

This sheet is available for the examinee to review

EXAMINEE PREVIEW:

For this event you are assigned the duties of the third CRO.
The instructor/examiner will act as the primary/secondary CRO and the SF.
The auxiliary instructor is available to act as Auxiliary Operators on the radio or page system.

When you are told to begin, you will respond to the cues or indications which the Examiner will provide to you either verbally or by the simulator.

You are to respond as you would in the plant for a real condition.

TASK CONDITIONS:

Plant is at 100% power MOC, with an unidentified RCS leak in containment.

THREE MILE ISLAND NUCLEAR STATION 11/24/99 08:58:25

UNIT NO. 1 SURVEILLANCE PROCEDURE 1303-1.1

REACTOR COOLANT SYSTEM LEAK RATE

SELECTED INTERVAL (1-8 HOURS):	1	HOURS
ENTERED RCS OR MUT INVENTORY CHANGE FROM DATA SHEET 5		.000
ENTERED RCDT CHANGE FROM DATA SHEET 5		.000
ENTERED IDENTIFIED LEAK RATE FROM DATA SHEET 4		.000
ENTERED OSTG LEAKAGE FROM SP1301-1		.000

TIME	TCA (F)	THA (F)	TCB (F)	THB (F)	TAVE (F)	PRZR LVL (IN)	MUTK LVL (IN)
POINT ID:	A0510	A0508	A0513	A0509		C1720	A0426
07:48:52	556.178	601.538	556.362	601.577	578.914	218.540	82.758
POINT ID:	A0510	A0508	A0513	A0509		C1720	A0426
08:48:52	556.063	601.480	556.294	601.531	578.842	217.556	78.344

TIME	RCDT LVL (IN)	RCS PRESS (PSIG)	RCDT LVL MAX/MIN (IN)		MUTK LVL MAX/MIN (IN)
POINT ID:	A0835	A0586	MAX	96.021	82.886
07:48:52	95.678	2155.46	MIN	95.695	78.042
POINT ID:	A0835	A0586			
08:48:52	96.006	2158.11			

LEAKAGE PLUS LOSSES (MUST BE LESS THAN 30 GPM) :	2.3131
TOTAL RCS LEAK RATE (MUST BE LESS THAN 10 GPM) :	2.1219
NET UNIDENTIFIED LEAK RATE (MUST BE LESS THAN 1 GPM) :	2.1219

HARD COPY BEING MADE TO LINE PRINTER IF COPY COMPLETE CANCEL ELSE EXECUTE

OKE

EXAMINER CUES	EXAMINEE ACTIONS	STANDARD
As the Shift Foreman, direct the Examinee to enter an RCS leak rate into the PPC for a time length of 1 Hour using Automatic Mode and identify any leakage in excess of Tech Spec limits. Provide the examinee a copy of 1303-1.1 RCS Leak Rate if the examinee request.	1. The examinee obtains a copy of 1303-1.1 RCS Leak Rate.	1. Examinee obtains a copy of 1303-1.1 RCS Leak Rate.
	*2. At the PPC the examinee depresses the System Performance Calculation Menu Function on the CRT keypad.	2. A system performance calculation menu will appear on the CRT. _____ SAT
	*3. The examinee selects the Reactor Coolant Leak Rate Calculation by entering '1' in the area designated "Enter Area No.".	3. The RCS leak rate screen appears. _____ SAT
If the examinee identifies that the RCS leak rate should be entered for 2 hours, due to plant conditions the SS wants the RCS leak rate to be calculated for 1 hour.	*4. The examinee enters '1' hour for the time interval.	4. The examinee enters '1' hour for time limit. _____ SAT
If the examinee made an error in any entry he/she should be allowed to correct the error in accordance with the procedure "NOTE".	*5 The examinee tabs to position the cursor to the Call Back entry and enters '1' to select automatic mode and depresses Execute function key.	5. The examinee enters a '1' in the Call back entry and depresses execute function key. A message "Please Wait" will appear At the bottom of the CRT. _____ SAT

EXAMINER CUES	EXAMINEE ACTIONS	STANDARD
Option 1: If other JPMs are to be performed in the simulator, they should be performed while waiting for the RCS leak rate calculation. Option 2: If the examinee successfully entered the RCS leakrate proceed to step 7.		
If the examinee made an error in any entry, he/she should be allowed to correct the error in accordance with the procedure "NOTE".	6. At the end of the selected time interval the examinee will enter the following information and press the Execute function key. RCS/MUT Inventory Change: 0 Gal. RCDT change: 0 Lbm Identified Leak rate: 0 Lbm/Min OTSG Leak rate: 0 Lbm/Min	6. Using the Tab forward function key, repositions the cursor and enter the appropriate data in the correct field. RCS/MUT Inventory Change: 0 Gal. RCDT change: 0 Lbm Identified Leak rate: 0 Lbm/Min OTSG Leak rate: 0 Lbm/Min Examinee depresses the execute function key. The message "Hard Copy Being Made to the Line Printer" will appear on the CRT.
The examiner should provide the RCS leak rate results if option 2 was used in this JPM.	7. The examinee obtains a hard copy from the line printer for examiner to evaluate the results.	7. The examinee obtains a hard copy of the RCS leak rate. Unidentified RCS leak rate is approximately 2.1 GPM

EXAMINER CUES	EXAMINEE ACTIONS	STANDARD
As the SF, ask the examinee if the RCS leakage is in excess of any Tech Spec allowable leakage. Tech Spec Section No. is not required.	*8. Using Tech Specs, the examinee identifies that Tech Spec 3.1.6.2 Unidentified RCS leakage is in excess of 1 GPM.	8. The examinee identifies that the 2.1 GPM RCS leak rate is in excess of the Tech Spec limit for unidentified RCS leakage (1GPM) _____ SAT

After the examinee completes the leak rate and identifies that the leakage is in excess of the Tech Spec allowed limit the JPM may be terminated.

(*) Denotes Critical Element.

EVALUATION: SAT:_____ UNSAT:_____

JPM CHANGE HISTORY PAGE

REVISION	DATE	REFERENCE TITLE	DESCRIPTION (Include AI # if Appropriate)

THREE MILE ISLAND NUCLEAR STATION
UNIT NO. 1 SURVEILLANCE PROCEDURE 1303-1.1
REACTOR COOLANT SYSTEM LEAK RATE

11/24/1999
07:48:51

NOTE: YOU MUST ENTER A DECIMAL POINT WITH THE LEAKAGE VALUES.
IF RCS INVENTORY IS INCREASED THE DATA ENTRY MUST BE NEGATIVE.

SELECTED INTERVAL (1-8 HOURS):	1 HOURS	
ENTERED RCS OR MUT INVENTORY CHANGE FROM DATA SHEET 5	.000	GAL
ENTERED RCDT CHANGE FROM DATA SHEET 5	.000	LBM
ENTERED IDENTIFIED LEAK RATE FROM DATA SHEET 4	.000	LBM/MIN
ENTERED OSTG LEAKAGE FROM SP1301-1	.000	LBM/MIN

POINT ID:	A0510	A0508	A0513	A0509	C1720	A0426	A0835
POINT ID:	A0510	A0508	A0513	A0509	C1720	A0426	A0835

TIME	TCA (F)	THA (F)	TCB (F)	THB (F)	TAVE (F)	PRZR LVL (IN)	MUTK LVL (IN)	RCDT L (IN)
07:48:52	556.178	601.538	556.362	601.577	578.914	218.540	82.758	95.67
08:48:52	556.063	601.480	556.294	601.531	578.842	217.556	78.344	96.00

	RCDT LVL (IN)	MUTK LVL (IN)
MAX	96.021	82.886
MIN	95.695	78.042

LEAKAGE PLUS LOSSES (MUST BE LESS THAN 30 GPM) :	2.3131
RCS LEAK RATE (MUST BE LESS THAN 10 GPM) :	2.1219
NET UNIDENTIFIED LEAK RATE (MUST BE LESS THAN 1 GPM) :	2.1219

OPERATOR: _____ DATE/TIME: _____

APPROVED: _____ DATE/TIME: _____

NOTE: ATTACH ALL APPROPRIATE DATA SHEETS

FRWD

TMI-1 OPERATOR TRAINING REQUALIFICATION PROGRAM

JOB PERFORMANCE MEASURE

POSITION: SRO/RO/AO

TITLE:	Verification of Emergency Diesel ES Standby
TASK NUMBER:	0640010101
EVALUATION METHOD:	PERFORM: X SIMULATE: ____
EVALUATION LOCATION:	SIMULATOR: X IN-PLANT: ____ CONTROL ROOM: ____
APPROXIMATE COMPLETION TIME:	15 Minutes
IMPORTANCE RATING (TIF):	TMI: RO 2.61 NRC: K/A 2.2.12, RO 3.0
TOOLS AND EQUIPMENT:	None
EXAMINEE REFERENCES:	Surveillance Procedure 1303-4.16 Emergency Power System Rev. 84
10CFR55.	(a)(41.10, 45.13).

	SIGNATURE	DATE
Submitted By:		11/29/99
Validated By:		12/6/99
Reviewed by: Lead Instructor, Operator Training OR Lead Instructor, Simulator Training		12/4/99
Operations Training Manager		12/14/99
Approved By: Plant Operations Director		12/17/99

SIMULATOR CONDITIONS:

IC 86 or any 100% Power IC

EDG 1A is shutdown following a 1 hour surveillance run.

Verify Remote Functions:

EGR07 Speed Droop @ 70%

EGR09 Unit/Parallel selected to Parallel

EGR28 Fuel Rack - Tripped

EGR05 Exciter – Norm

Verify Panel Controls:

Manual Voltage Control @ 0

Starting Switch in Manual

Exciter in Manual

EXAMINER PREVIEW:

The sequence of events which should be followed in the conduct of this JPM is as follows:

1. Read or otherwise inform the Examinee of the information contained in the "EXAMINEE PREVIEW" section of this JPM.
2. Inform the Examinee of the TASK CONDITIONS.
3. Allow the Examinee 2-3 minutes to scan the Console.
4. Begin the cueing sequence as described in the EXAMINER CUES section.

A certain amount of liberty (questioning or cueing beyond the bounds of the "EXAMINER CUES") may be taken by the Examiner in trying to extract the requisite information from the Examinee, however, care must be taken to ensure that you do not COACH the Examinee.

To complete this task successfully, the Examinee must complete each critical element (an element of the task which, if omitted or performed incorrectly, would result in a failure to meet the "TASK STANDARD") correctly.

TASK STANDARDS:

EDG 1A is in ES standby IAW 1303-4.16, Emergency Power System

This sheet is available for the examinee to review

EXAMINEE PREVIEW:

For this event you are assigned the duties of the Primary CRO. The instructor/examiner will act as the Secondary CRO and the SF. The auxiliary instructor is available to act as Auxiliary Operators on the radio or page system.

When you are told to begin, you will respond to the cues or indications which the Examiner will provide to you either verbally or by the simulator.

You are to respond as you would in the plant for a real condition.

TASK CONDITIONS:

EDG 1A has just completed a 1 hour test run and must be placed in ES standby.

EXAMINER CUES	EXAMINEE ACTIONS	STANDARD
As the SF direct the examinee to place EDG-1A into ES standby IAW 1303-4.16 Emergency Power System, Section 8.5 As applicable in-plant steps have already been completed as noted by initials on appropriate steps.	*1, Examinee verifies in the control room the following switch positions or settings: Exciter switch: AUTO Generator Manual Voltage Controller set at 45%. Starting Switch: AUTO	1. Exciter Switch indicates AUTO Generator Manual Voltage Controller is at 45% Starting Switch is in AUTO. The speed control idle lamp goes out and in approximately 3 minutes, the speed control High Lamp goes 'on'. _____ SAT
ICO: Using Remote Functions EGR07 Speed Droop to 0 EGR09 Unit/Parallel to Unit. After completion notify the control room that you and another AO have verified required positions.	*2. The examinee directs the Aux operator to position the SPEED DROOP to 0% and the UNIT/PARALLEL switch to UNIT.	1. The examinee directs the Aux operator to position the following: Speed droop to 0% Unit/Parallel Switch to Unit. _____ SAT
Note: Examiner may sign as independent verifier for these steps.	*3. The examinee verifies the following: U-1 Diesel Fuel Tank Full Light, 'on'. Govenor Speed Control "HIGH" Lamp 'on'.	3. The examinee verifies the following on CR: U-1 Diesel Fuel Tank Full Light, 'on'. Govenor Speed Control "HIGH" Lamp 'on'. _____ SAT

EXAMINER CUES	EXAMINEE ACTIONS	STANDARD
The ICO, when directed by the examinee, performs the following: a. Using Remote Function EGR28, Reset the fuel racks. b. Simulate depressing the Exciter RESET PB. c. Using remote Function EGR05 RESET Exciter. d. Simulate SDR & 5A Relay are de-energized. e. Using remote function ANR02 Reset/Clear local alarms.	*4. The examinee has the Aux Operator at the diesel perform the following steps: a. Reset the fuel rack. b. Depress the Exciter RESET pushbutton at the EMMSB. c. Depress the RESET Pushbutton at the EMIP. d. Verify the SDR & 5A relays are de-energized. e. Verify local alarms are clear.	4. The examinee in communications has the Aux Operator performs the following steps: a. Reset the fuel rack. b. Depress the Exciter RESET pushbutton at the EMMSB. c. Depress the RESET Pushbutton at the EMIP, and reset A-2-1. d. Verify the SDR & 5A relays are de-energized. e. Verify local alarms are clear. _____ SAT
Examiner: If steps performed correctly, you may initial steps for independent verification.	*5 The examinee verifies the following alarms are clear: Diesel Gen 1A Trouble(A-1-2) Diesel Gen 1A Blocked(A-2-1) Diesel Gen Bkr Trip(A-1-3)	5. The examinee verifies the following alarms are clear Main Annunciator Panel A Diesel Gen 1A Trouble Diesel Gen 1A Blocked Diesel Gen Bkr Trip _____ SAT
	*6. The examinee verifies the following computer alarms are clear: L2428 Diesel Fuel Tank Storage Tank Level MIN. L2429 Diesel Fuel Inventory below MIN.	6. The examinee verifies the following computer alarms are clear: L2428 Diesel Fuel Tank Storage Tank Level MIN. L2429 Diesel Fuel Inventory below MIN. _____ SAT

EXAMINER CUES	EXAMINEE ACTIONS	STANDARD
	7. The examinee notifies the SF that the surveillance is complete.	7. The examinee notifies the SF that the EDG surveillance is complete IAW 1303-4.16 Declare EG-Y-1A Operable. Terminate Respective time clocks. Make appropriate closeout logbook entries.

After the SF is notified the JPM may be terminated.

(*) Denotes Critical Element.

EVALUATION: SAT:_____ UNSAT:_____

JPM CHANGE HISTORY PAGE

REVISION	DATE	REFERENCE TITLE	DESCRIPTION (Include AI # if Appropriate)

TMI-1 OPERATOR TRAINING INITIAL TRAINING PROGRAM
ADMINISTRATIVE REQUIREMENTS QUESTIONS

POSITION: SRO/RO

ADMIN SECTION	A.3.1
TASK STATEMENT	N/A
TASK NUMBER	N/A
TERMINAL OBJECTIVE	Define, identify the postings, and state the requirements to enter each of the following radiological areas: Contaminated Area, Radiation Area Explain how time may be used to reduce dose, and state methods to implement this ALARA factor.
EVALUATION METHOD	ORAL EXAMINATION
EVALUATION LOCATION	SIMULATOR:_____ IN-PLANT:_____ CONTROL ROOM:_____
APPROXIMATE TIME	2 Minutes
IMPORTANCE RATING (TIF)	N/A
TOOLS AND EQUIPMENT	NONE
REFERENCES	GET Radiation Worker Training Manual, Rev. 5
10CFR55.45(A)	(10)

	SIGNATURE	DATE
Submitted By:	John L Carey	1/7/2000
Validated By:	[illegible]	1/26/00
Reviewed By: Lead Instructor, Operator Training OR Lead Instructor, Simulator Training	[illegible]	1/26/00
Operations Training Manager	R [illegible]	1/27/00
Approved By: Plant Operations Director	[illegible] / [illegible]	1/26/00

AMERGEN, LLC
Middletown, Pa.
Copyright 2000

EXAMINER INSTRUCTIONS

Sequence for administration of Administrative Requirements questions:

1. Provide the Examinee with a copy of the Administrative Requirements Question Sheet.
2. Inform the Examinee of the PLANT CONDITIONS, and AUTHORIZED OPEN REFERENCES, if appropriate as delineated on the cover sheet.
3. Allow the Examinee to ask clarification questions regarding the questions. Questions and clarifications provided should be annotated in the Examiner Comments section of the Question Sheet.
4. If needed, allow the Examinee 2-3 minutes to develop solutions to the questions prior to answering.
5. Instruct the Examinee to DOCUMENT ANSWERS on the Question Sheet.
6. Instruct the Examinee to inform you when the answers are complete.
7. Do not inform the Examinee whether answers are correct or incorrect.
8. Retrieve the Question Sheet from the Examinee after answers have been documented and the Examinee has signed.
9. Do not grade the answers in the presence of the Examinee.
10. Use the Examiner's Reference Sheet to grade the answers.

AMERGEN, LLC
Middletown, Pa.
Copyright 2000

Administrative Requirements Question Sheet

PLANT CONDITIONS	You are a licensed CRO and have been directed to go to DH-V-12B to support work on DH-V-12B.

ADMINISTRATIVE REQUIREMENTS QUESTION
QUESTION **Using the accompanying Radiological Survey Map, identify the posting requirements for the area where DH-V-12B is located.**
RESPONSE

ADMINISTRATIVE REQUIREMENTS QUESTION
QUESTION **The Control Room has notified you that there will be a 30 minute delay until work can commence. Identify on the accompanying Radiological Survey Map where ALARA expectations can be met while awaiting permission to commence work.**
RESPONSE

EXAMINEE: _____ - DATE: _____

EXAMINER COMMENTS		
EVALUATION	SAT: _____	UNSAT: _____

EXAMINER: _____ - DATE: _____

AMERGEN, LLC
Middletown, Pa.
Copyright 2000

EXAMINER REFERENCE SHEET

QUESTION	ANSWER	STANDARD
Question 1 Using the accompanying Radiological Survey Map, identify the posting requirements for the area where DH-V-12B is located.	Radiation Area Contaminated Area	Correct answer provided without the use of references. Ref: GET Rad Worker Handout, page 56 and 58.
Question 2 The Control Room has notified you that there will be a 30 minute delay until work can commence. Identify on the accompanying Radiological Survey Map where ALARA expectations can be met while awaiting permission to commence work.	Words to the effect: "Standby in the area where the radiation level is 1 mrem/hr (lower right hand corner of the survay map)."	Correct answer provided without the use of references. Ref: GET Rad Worker Handout, page 17.

AMERGEN, LLC
Middletown, Pa.
Copyright 2000

ADMIN QUESTION CHANGE HISTORY PAGE

REVISION	DATE	REFERENCE TITLE	DESCRIPTION (Include AI # if Appropriate)

AMERGEN, LLC
Middletown, Pa.
Copyright 2000

TMI - 1 Radiological Survey

Survey Information	Instrument Data				Air Sample	File Code Number	Sequential Survey Number
Location - Decay Heat Shielded Area 5B	Contamination Survey		Radiation Survey		Date N/ Time	1AB055	952 8048
Reason - Routine	Inst Rm-14	Inst SAC-4	Inst RS050E	Inst N/	Activity: T		
Date 12-17-99 Time 0355	S/N 3447	S/N 394	S/N B313V	S/N	Notes:		
Technician Tyler Piper	Cal Due 1-18-00	Cal Due 7-18-00	Cal Due 12-18-99	Cal Due / A	Contamination results in DPM/100cm² unless otherwise noted.		
Reviewed by 12.17.99 Power Level 100	Eff % 10%	Eff % 34%	BCF 4	BCF	O = Contact readings		
	Bkgd 100	Bkgd 0.1	Tech: Tyler Piper		□ = Smear locations		
	MDC —	MDC 4.4	Radiation levels in mr/hr, and dose rates are general area unless otherwise noted.				
	Tech: T. Young						

Smearable Contamination

Location	β γ	α	Comments
1	<1K		Floor
2	<1K		
3	2K	<MDC	
4	<1K		
5	<1K		Valve
6	<1K		Valve
7	<1K		Valve

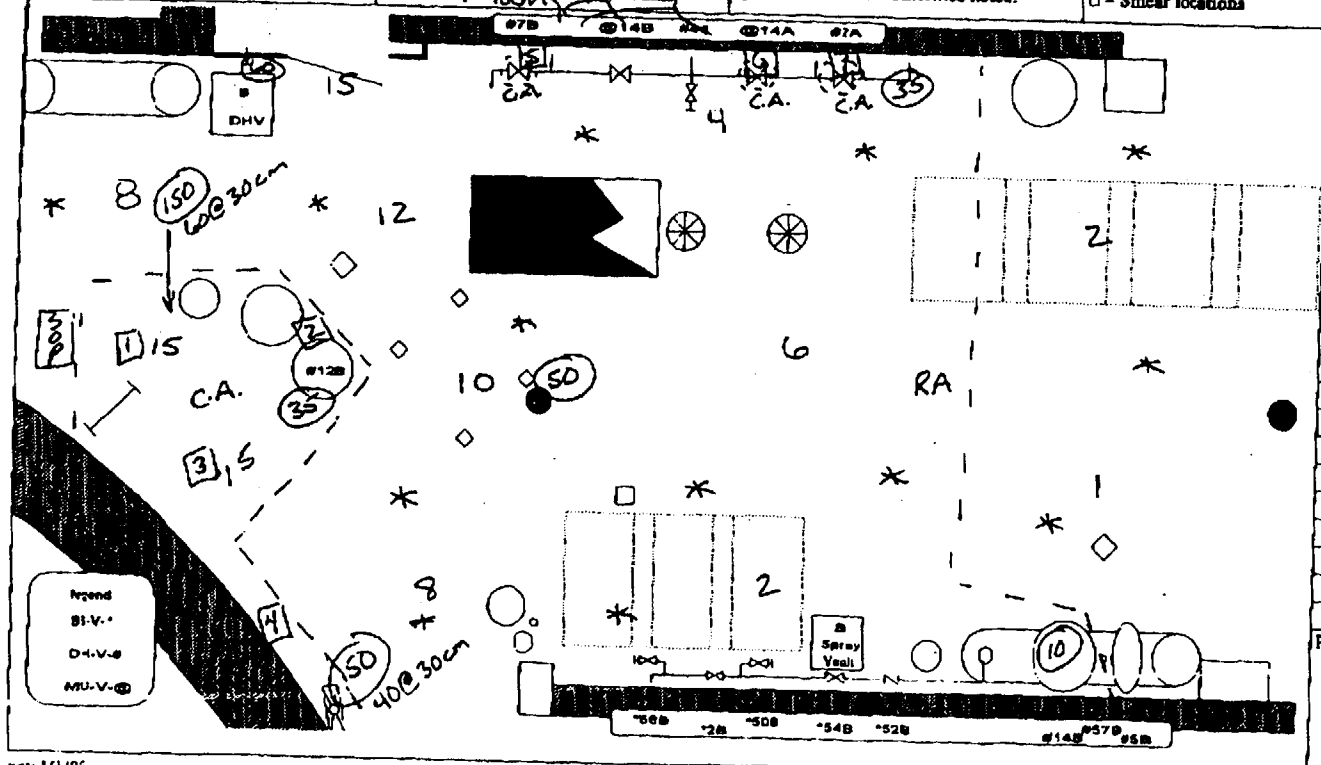

Remarks: NOB

* = TACKY WIPES TAKEN IN AREAS AS INDICATED. ALL WIPES LESS THAN 1000 DPM/WIPE.

rev 1/1/95

JAN 04 00 01:08P

TMI-1 OPERATOR TRAINING REQUALIFICATION PROGRAM

JOB PERFORMANCE MEASURE - TIME CRITICAL

POSITION: SRO/RO/AO

TITLE:	Emergency Notifications and Call Outs
TASK NUMBER:	5010045003
EVALUATION METHOD:	PERFORM:_____ SIMULATE:__X__
EVALUATION LOCATION:	SIMULATOR:__X__ IN-PLANT:_____ CONTROL ROOM:_____
APPROXIMATE COMPLETION TIME:	Minutes: 15
IMPORTANCE RATING (TIF):	NRC: K/A 2.4.43 RO 2.8 TMI: RO 2.9
TOOLS AND EQUIPMENT:	EP Pager Call Out Phone Notification Line ENS Telephone
EXAMINEE REFERENCES:	EPIP-TMI-03 Emergency Notification and Call Outs
10CFR55.45:	(a)(13).

	SIGNATURE	DATE
Submitted By:	Fred Ozaino	10/1/99
Validated By:	D Swift	12/6/99
Reviewed by: Lead Instructor, Operator Training OR Lead Instructor, Simulator Training	Fred Ozaino	12/6/99
Operations Training Manager	R L Parnello	12/14/99
Approved By: Plant Operations Director	[illegible]	12/17/99

SIMULATOR CONDITIONS: N/A

EXAMINER PREVIEW: The sequence of events which should be followed in the conduct of this JPM is as follows:

1. Read or otherwise inform the Examinee of the information contained in the "EXAMINEE PREVIEW" section of this JPM.
2. Inform the Examinee of the TASK CONDITIONS.
3. Begin the cueing sequence as described in the EXAMINER CUES section.

A certain amount of liberty (questioning or cueing beyond the bounds of the "EXAMINER CUES") may be taken by the Examiner in trying to extract the requisite information from the Examinee, however, care must be taken to ensure that you do not COACH the Examinee.

To complete this task successfully, the Examinee must complete each critical element (an element of the task which, if omitted or performed incorrectly, would result in a failure to meet the "TASK STANDARD") correctly.

TASK STANDARDS: Perform all emergency notifications Per EPIP-TMI-.03, Exhibit 2, ALERT Checklist. Exhibit 2, Step 3 must be completed within 15 minutes of event declaration.

This sheet is available for the examinee to review

EXAMINEE PREVIEW:

For this event you are assigned the duties of the third CRO.
The instructor/examiner will act as the Emergency Director.
The auxiliary instructor is available to act as Auxiliary Operators on the radio or page system.

When you are told to begin, you will respond to the cues or indications which the Examiner will provide to you either verbally or by the simulator.

You are to respond as you would in the plant for a real condition.

TASK CONDITIONS:

An ALERT was declared due to a Security Event A7.1, Bomb discovered inside the Vital Area, at TMI.

Emergency Notifications are required to be performed.

You are the On-shift ECC Communication Coordinator.

EXAMINER CUES	EXAMINEE ACTIONS	STANDARD
As the Emergency Director give the examinee the Emergency Report Form part 1 and 2. Direct the examinee to make the required emergency notifications per EPIP-TMI-.03. Give the examinee a copy of the procedure.	1. The examinee obtains the Emergency Report Form Part 1 and 2 and proceeds to the SS office.	1. The examinee, with Emergency Report Form Parts 1 and 2, reports to the Simulator SS office, behind H&V panel. _____ SAT
2. As examiner provide the following CUES: a. Dial tone is heard. b. After the examinee pushes the GROUP PAGE button inform the examinee he hears: ***"Please enter your caller password"***. c. After the examinee enters LEVEL 2, wait 15 seconds and inform the examinee he hears: ***"Thank You"***.	*2. The examinee activates the group pagers.	2. The examinee activates the group pagers. a. Lifts the EP Pager Call Out Phone Receiver. b. Examinee pushes the GROUP PAGE button. c. The examinee hears ***"Please Enter your caller password"***, and presses the designated LEVEL button, LEVEL 2. d. After the examinee hears the voice prompt "Thank You", he/she hangs up. _____ SAT
3. Examiner: If the examinee performs the step correctly provide the following CUES: Dial tone is present.	*3. Examinee performs the 15 minute notifications.	3. Examinee picks up the Notification Line and confirms a dial tone.

EXAMINER CUES	EXAMINEE ACTIONS	STANDARD
a. Toggle Switch is on 'OVERRIDE'.		a. Examinee moves Toggle Switch UP to OVERRIDE. _____SAT
a. Calling tone is heard.		b. Examinee Dials "91" _____ SAT
b. Toggle Switch is 'NORMAL'.		c. After the examinee hears the calling tone, he/she places Toggle Switch down to NORMAL. _____ SAT
c. Hello this is: (Answer as appropriate.) PEMA Dauphin County Cumberland County Lancaster County Lebanon County York County		d. As the agencies answer the examinee states: ***"This is Three Mile Island Nuclear Station, Standby for an emergency message."*** _____ SAT
d. Repeat above (d.) as necessary.		e. The examinee ask each agency if it is on the line and checks each off in the procedure. _____ SAT
		f. After the examinee verifies each agency is on the line, he/she states: ***" Please stay on the line after the following message to provide a name or dispatcher number and to confirm receipt".*** _____ SAT

EXAMINER CUES	EXAMINEE ACTIONS	STANDARD
		g. The examiner reads "Emergency Report Form Part 1 and enters time when notification is completed. _____ SAT
h. As asked respond as follows: PEMA: No. 100 Dauphin No. 101 Cumberland No. 102 Lancaster No. 103 Lebanon No. 104 York No. 105		h. The examiner request confirmation Name or Number) from: PEMA Dauphin County Cumberland County Lancaster County Lebanon County York County _____ SAT
i. Inform examiner dial tone is heard.		i. The examiner: Flash the Hook Switch until a dial tone is heard and hangs up.
Step 4.0 of the procedure: As the examiner, play the part of an ECC Communicator and accept Part 2 of the Emergency Report Form and you are performing Exhibit 9. Step 4.1 Log Receipt confirmation may be left blank or N/A by examinee	*4. Examiner directs an ECC communicator to perform Exhibit 9 of this procedure and provide Part 2 of the Emergency Report Form.	4. The examiner directs an ECC communicator to perform Exhibit 9 of this procedure and provides him Part 2 of the Emergency Report Form. _____ SAT
Step 5 of procedure I&C Turnover N/A for examinee.		

EXAMINER CUES	EXAMINEE ACTIONS	STANDARD
Step 7 of procedure Examiner: Examinee may simulate this step.	5. The examinee pins on the ECC Communication Coordinator Button	5. The examinee pins on the ECC Communication Coordinator Button
Examiner CUE: As the STA inform the examinee that ERDS has been activated. Step 8.1 and 8.2 of procedure: Providing Exhibit 6 & completing exhibit 8 Not Applicable (N/A)	*6. The examinee verifies ERDS activation.	6. The examinee verifies activation of ERDS by the Shift Engineer. _____ SAT
Examiner: As the examinee successfully complete each step provide the following CUES: a. Dial tone and the phone has been successfully dialed. ***"Hello this is the NRC Emergency Notification Line", Mr. Robert Nelson.*** b. NRC Listens and acknowledges report. c. If requested provide the name of the NRC contact. Mr Robert Nelson.	*7. The examinee notifies the NRC using the Emergency Notification System (ENS) in the SS office or Control Room. (Simulator)	7. The examinee informs the NRC using the ENS by: a. Dialing the ten digit number attached on the ENS telephone. _____ SAT b. Examinee reads the Emergency Report Form. _____ SAT c. Examinee records the person contacted in the procedure. _____ SAT d. Examinee remains on the line with the NRC. _____ SAT

EXAMINER CUES	EXAMINEE ACTIONS	STANDARD
After the examinee has notified the NRC the JPM may be terminated.		

(*) Denotes Critical Element.

EVALUATION: **SAT:**_____ **UNSAT:**_____

JPM CHANGE HISTORY PAGE

REVISION	DATE	REFERENCE TITLE	DESCRIPTION (Include AI # if Appropriate)

NOTIFICATION OF A NUCLEAR POWER PLANT INCIDENT

EMERGENCY NOTIFICATION REPORT
CONFIRMATION FROM - TMI

This is a drill. This is a drill.

1. This is the Emergency Director at Three Mile Island.
The call back number is 717-948-2078.

2. EMERGENCY CLASSIFICATION
An Alert has been declared at hours on
This represents an Initial Classification Status.

3. BRIEF NON-TECHNICAL DESCRIPTION OF EVENT

Emergency Action Level : A 7.1 - Confirmed Security Event Potentially Affecting Safety Related Equipment.

'An Alert is declared because of a confirmed security event which degrades the safety level of the power plant. This event involves: A bomb discovered inside the Vital Area. The Vital Area includes buildings where Safety Related Equipment is located. Damage to this equipment would reduce the ability to protect the public's health and safety. - ~~OR - A Hostile Force inside the Protected Area. The Protected Area includes major plant structures like the turbine and service buildings that are protected by a security fence and to which access is controlled.'~~ DWilt

The plant mode is: Power Operation

4. There is no release to the environment as a result of this emergency.

6. Wind direction is **FROM** 337 degrees and the wind speed is 17.3 miles per hour.
This is a drill. This is a drill.

Approved by Daryl L Wilt

EMERGENCY REPORT FORM - TMI

CALL OUT:
Level 2

NOTIFICATIONS:
Instruction - Read Message - slowly and clearly.
This is a drill. This is a drill.

~~~~~~
(Instruction) This section to be completed by the communicator.

This is ______________________ at TMI. The time is now ______________.
communicator - your name
My phone number is 717-948-2078.
~~~~~~

An Alert has been declared at hours on .
This represents an Initial Classification Status.

Event type : A 7.1 - Confirmed Security Event Potentially Affecting Safety Related Equipment.
(EAL #) - (EAL Title)

The plant Mode is : Power Operation

There is no release to the environment as a result of this emergency.

Wind direction is **FROM** 337 degrees and the wind speed is 17.3 miles per hour.

This is a drill. This is a drill.

Approved by Daryl L Wilt

Part 2

EMERGENCY REPORT FORM - TMI

Instruction - Read Message - Slowly - Clearly.
This is a drill. This is a drill.

An Alert has been declared at hours on .
This represents an Initial Classification Status.
A 7.1 - Confirmed Security Event Potentially Affecting Safety Related Equipment.
'An Alert is declared because of a confirmed security event which degrades the safety level of the power plant. This event involves: A bomb discovered inside the Vital Area. The Vital Area includes buildings where Safety Related Equipment is located. Damage to this equipment would reduce the ability to protect the public's health and safety. -
~~OR - A Hostile Force inside the Protected Area. The Protected Area includes major plant structures like the turbine and service buildings that are protected by a security fence and to which access is controlled.'~~ DLWilt

The plant mode is : Power Operation

There is no release to the environment as a result of this emergency.

This is a drill. This is a drill.

Approved by Daryl L Wilt

TMI-1 OPERATOR TRAINING REQUALIFICATION PROGRAM

JOB PERFORMANCE MEASURE – ALTERNATE PATH

POSITION: SRO/RO

TITLE:	Perform a Safety Group Withdrawal
TASK NUMBER:	0010180101
EVALUATION METHOD:	PERFORM: X SIMULATE: ____
EVALUATION LOCATION:	SIMULATOR: X IN-PLANT: ____ CONTROL ROOM: ____
APPROXIMATE COMPLETION TIME:	25 Minutes
IMPORTANCE RATING (TIF):	TMI=2.84 NRC=3.4 K4.13
TOOLS AND EQUIPMENT:	None
EXAMINEE REFERENCES:	OP 1105-9 (sections 3.2.2, 3.2.3, and 3.2.5 attached for examiner)
10CFR55.45:	(a)(1), (3), (12).

	SIGNATURE	DATE
Submitted By:	[signature]	10/8/99
Validated By:	[signature]	10/8/99
Reviewed by: Lead Instructor, Operator Training OR Lead Instructor, Simulator Training	[signature]	10/8/99
Operations Training Manager	[signature]	10/19/99
Approved By: Plant Operations Director	[signature]	12/3/99

SIMULATOR CONDITIONS:

IC05 Hot Shutdown, MOC, no xenon

On RPPC center console monitor, display Group 10, Area 24.

On CRD panel, turn GROUP POSITION SELECTOR switch to SAFETY.

Transfer CRG-4 to auxiliary power supply and insert CRG-4 to 75%.

Event Trigger #1: RDSGP(4)>0.95, Event Command: imf RD0201.

Event Trigger #2: RDSGP(4)>0.98, Event Command: dmf RD0201.

EXAMINER PREVIEW:

This task deals with performing safety group-4 withdrawal from 75% to its group out-limit to establish conditions necessary for reactor startup. It is considered an alternate path JPM because one rod in group-4 will NOT reach its individual out limit, requiring alternate actions delineated in 1105-9 to obtain the individual rod out limit.

Obtain current revision of 1105-9 sections 3.2.2, 3.2.3, and 3.2.5 for reference during the JPM.

The sequence of events which should be followed in the conduct of this JPM is as follows:

1. Read or otherwise inform the Examinee of the information contained in the "EXAMINEE PREVIEW" section of this JPM.
2. Inform the Examinee of the TASK CONDITIONS.
3. Allow the Examinee 2-3 minutes to scan the Console.
4. Begin the cueing sequence as described in the EXAMINER CUES section.

A certain amount of liberty (questioning or cueing beyond the bounds of the "EXAMINER CUES") may be taken by the Examiner in trying to extract the requisite information from the Examinee, however, care must be taken to ensure that you do not COACH the Examinee.

To complete this task successfully, the Examinee must complete each critical element (an element of the task which, if omitted or performed incorrectly, would result in a failure to meet the "TASK STANDARD") correctly.

TASK STANDARDS:

Safety group-4 at group out limit (red lamp on CRD panel) and all eight group-4 rods at individual rod out limits (red lamps on PI panel), and all eight group-4 rods on the hold bus (none on auxiliary power supply).

This sheet is available for the examinee to review

EXAMINEE PREVIEW:

For this event you are assigned the duties of the primary CRO.

The instructor/examiner will act as the shift foreman, secondary CRO, and STA.

The auxiliary instructor is available to act as Auxiliary Operators on the radio or page system.

When you are told to begin, you will respond to the cues or indications which the Examiner will provide to you either verbally or by the simulator.

You are to respond as you would in the plant for a real condition.

TASK CONDITIONS:

The plant is at hot shutdown, 300 EFPD, no xenon.

RCS boron is 1600 ppm

Preparations are in progress for plant restart following a turbine trip and reactor trip from 100% power four days ago.

Control rod safety groups 1,2, and 3 are fully withdrawn.

Control rod safety group 4 is currently 75% withdrawn on the auxiliary power supply, awaiting results of 1/M plot for which stable counts has already been obtained.

Your task will be to complete safety group 4 withdrawal to its full out position, and then transfer group 4 back to the DC hold bus per 1105-9.

EXAMINER CUES	EXAMINEE ACTIONS	STANDARD
As the Shift Foreman, inform examinee that redundant 1/M plots indicate it is safe to pull control rod group-4 (CRG-4) to 100%. Direct examinee to withdraw CRG-4 to 100%, then transfer CRG-4 back to the DC hold bus.	1. Examinee reviews 1105-9 section 3.2.5 to determine current applicable step.	1. Examinee has found current place in 1105-9 as evidenced by his/her report that CRG-4 will be withdrawn.
	*2. Examinee manipulates CRD panel control handle to WITHDRAW position and monitors CRG-4 position meter on CC, PI panel on PC, and computer to verify out motion.	2. CRG-4 is withdrawing as evidenced by increasing CRG-4 position on CC, PC, and computer. _____ SAT
	3. Examinee monitors source range nuclear instruments, NI-11 and 12, as positive reactivity is added by CRG-4.	3. Source range NI's being monitored during CRG-4 withdrawal as evidenced by examinee actions.
	*4. Examinee withdraws CRG-4 to 100% then releases CRD control handle to neutral position when CRG-4 red OUT LIMIT lamp is illuminated on CRD panel.	4. CRG-4 is at its out limit as indicated by the red CRG-4 OUT LIMIT lamp illuminated on CRD panel. _____ SAT

EXAMINER CUES	EXAMINEE ACTIONS	STANDARD
As Shift Foreman, acknowledge any report from examinee concerning rod positions and/or lamp status.	*5. Examinee checks PI panel on PC for all eight CRG-4 red OUT LIMIT lamps on, and recognizes that rod 4-4 OUT LIMIT lamp is off.	5. Rod 4-4 recognized as not at its individual out limit on PI panel, as evidenced by report from examinee. _____ SAT
	6. Examinee performs a lamp check of red OUT LIMIT lamps on PI panel, by depressing the white OUT LIMIT lamp check button on top left of PI panel.	6. All PI panel red OUT LIMIT lamps checked good as evidenced by all 69 red lamps illuminating when OUT LIMIT lamp check button is depressed.
	7. Examinee selects JOG on SPEED SELECTOR switch on CRD panel.	7. CRD speed selector switch on CRD panel in JOG position.
	*8. Examinee inserts CRG-4 by manipulating CRD control handle forward to INSERT position until red CRG-4 OUT LIMIT lamp on CRD panel goes off, and then releases CRD control handle prior to CRG-4 individual rod OUT LIMIT lamps on PI panel going off except rod 4-4.	8. CRG-4 OUT LIMIT lamp on CRD panel is off, and all CRG-4 individual rod OUT LIMIT lamps on PI panel are still on except rod 4-4. _____ SAT

EXAMINER CUES	EXAMINEE ACTIONS	STANDARD
NOTE: CRD panel will already be in MANUAL and SEQ-OR (sequence override) mode, with ALL Group-4 rods selected on the SINGLE and GROUP SELECT SWITCHES.	*9. Examinee transfers CRG-4 back to its hold bus per section 3.2.3 of 1105-9 as follows: ♦ Depresses GROUP/AUXIL pushbutton and verifies AUXIL lamp illuminates ♦ Selects JOG on SPEED SELECTOR switch ♦ Verifies SY (synch) lamp illuminates ♦ Depresses CLAMP push-button and verifies amber CLAMP lamp illuminates ♦ Depresses MAN TRANS pushbutton, and verifies TR CF lamp goes off, and verifies individual Group-4 rod CONTROL ON lamps (white) on PI panel (PC) go off ♦ Depresses CLAMP REL pushbutton and verifies green CLAMP REL lamp illuminates ♦ Depresses GROUP/AUXIL pushbutton and verifies GROUP lamp illuminates ♦ Selects OFF on GROUP SELECT SWITCH ♦ Selects OFF on SINGLE SELECT SWITCH ♦ Depresses TRANS RESET pushbutton and verifies white CONTROL ON lamp for Group-4 on CRD panel goes off, and verifies TRANS RESET lamp illuminates	9. All CRG-4 rods are on hold bus as evidenced by: white TR CF and CRG-4 CONTROL ON lamps on CRD panel off, and all eight CRG-4 white CONTROL ON lamps on PI panel are off. _____ SAT
NOTE: There is no need to transfer CRD panel back to SEQ and RUN mode because of forthcoming rod transfer operations.		

EXAMINER CUES	EXAMINEE ACTIONS	STANDARD
NOTE: CRD panel should already be in MAN mode.	*10. Examinee transfers control rod 4-4 only to the auxiliary power supply per section 3.2.2 of 1105-9 as follows: ♦ Verifies CRD in manual (MAN lamp on) ♦ Verifies GROUP lamp on ♦ Verifies or selects SEQ-OR mode and lamp on ♦ Selects Group-4 on GROUP SELECT SWITCH ♦ Selects Rod-4 on SINGLE SELECT SWITCH ♦ Depresses TRANS RESET pushbutton ♦ Depresses GROUP/AUXIL pushbutton and verifies AUXIL lamp on ♦ Verifies white CONTROL ON lamp for Group-4 on CRD panel is on ♦ Selects JOG on SPEED SELECTOR switch ♦ Verifies SY (synch) lamp illuminates ♦ Depresses CLAMP push-button and verifies amber CLAMP lamp on ♦ Depresses MAN TRANS pushbutton, verifies TR CF lamp on, and verifies individual Rod 4-4 white CONTROL ON lamp on PI panel (PC) is on ♦ Depresses CLAMP REL pushbutton and verifies green CLAMP REL lamp illuminates ♦ Depresses GROUP/AUXIL pushbutton and verifies GROUP lamp illuminates	10. Control rod 4-4 is on auxiliary power supply as evidenced by: GROUP SELECT SWITCH on CRD panel selected to CRG-4, SINGLE SELECT SWITCH on CRD panel selected to rod 4, white TR CF and CRG-4 CONTROL ON lamps on CRD panel are on, and control rod 4-4 white CONTROL ON lamp on PI panel is on. _____ SAT
NOTE: Selecting SEQ and AUTO mode on CRD panel is not desired in this case.		

EXAMINER CUES	EXAMINEE ACTIONS	STANDARD
	11. Examinee selects JOG on SPEED SELECTOR switch on CRD panel.	11. CRD speed selector switch on CRD panel in JOG position.
	*12. Examinee withdraws rod 4-4 by manipulating CRD control handle to WITHDRAW position until rod 4-4 red OUT LIMIT lamp on PI panel comes on, then releases CRD control handle to vertical neutral position prior to obtaining CRG-4 red OUT LIMIT lamp on CRD panel.	12. Control rod 4-4 is at its individual out limit as evidenced by rod 4-4 red OUT LIMIT lamp on PI panel on. _____ SAT

EXAMINER CUES	EXAMINEE ACTIONS	STANDARD
NOTE: CRD panel will already be in MANUAL and SEQ-OR (sequence override) mode, with Group-4 and Rod-4 selected on GROUP and SINGLE SELECT SWITCHes.	*13. Examinee transfers rod 4-4 back to the hold bus per section 3.2.3 of 1105-9 as follows: ♦ Depresses GROUP/AUXIL pushbutton and verifies AUXIL lamp illuminates ♦ Selects JOG on SPEED SELECTOR switch ♦ Verifies SY (synch) lamp illuminates ♦ Depresses CLAMP push-button and verifies amber CLAMP lamp illuminates ♦ Depresses MAN TRANS pushbutton, and verifies TR CF lamp goes off, and verifies individual rod 4-4 CONTROL ON lamp (white) on PI panel (PC) goes off ♦ Depresses CLAMP REL pushbutton and verifies green CLAMP REL lamp illuminates ♦ Depresses GROUP/AUXIL pushbutton and verifies GROUP lamp illuminates ♦ Selects OFF on GROUP SELECT SWITCH ♦ Selects OFF on SINGLE SELECT SWITCH ♦ Depresses TRANS RESET pushbutton and verifies white CONTROL ON lamp for Group-4 on CRD panel goes off, and verifies TRANS RESET lamp illuminates	13. All CRG-4 rods are on hold bus as evidenced by: white TR CF and CRG-4 CONTROL ON lamps on CRD panel off, and all eight white CRG-4 rod CONTROL ON lamps on PI panel are off. _____ SAT
NOTE: There is no need to transfer CRD panel back to SEQ and RUN mode because of forthcoming rod transfer operations.		

EXAMINER CUES	EXAMINEE ACTIONS	STANDARD
NOTE: CRD panel should already be in MAN mode.	*14. Examinee transfers Group-4 to the auxiliary power supply per section 3.2.2 of 1105-9 as follows: ♦ Verifies CRD in manual (MAN lamp on) ♦ Verifies GROUP lamp on ♦ Verifies or selects SEQ-OR mode and lamp on ♦ Selects Group-4 on GROUP SELECT SWITCH ♦ Selects ALL on SINGLE SELECT SWITCH ♦ Depresses TRANS RESET pushbutton ♦ Depresses GROUP/AUXIL pushbutton and verifies AUXIL lamp on ♦ Verifies white CONTROL ON lamp for Group-4 on CRD panel is on ♦ Selects JOG on SPEED SELECTOR switch ♦ Verifies SY (synch) lamp illuminates ♦ Depresses CLAMP pushbutton and verifies amber CLAMP lamp on ♦ Depresses MAN TRANS pushbutton, verifies TR CF lamp on, and verifies all eight Group-4 rod white CONTROL ON lamps on PI panel (PC) are on ♦ Depresses CLAMP REL pushbutton and verifies green CLAMP REL lamp illuminates ♦ Depresses GROUP/AUXIL pushbutton and verifies GROUP lamp illuminates	14. All eight CRG-4 rods on auxiliary power supply as evidenced by: GROUP SELECT SWITCH on CRD panel selected to CRG-4, SINGLE SELECT SWITCH on CRD panel selected to ALL, white TR CF and CRG-4 CONTROL ON lamps on CRD panel are on, and all eight CRG-4 white CONTROL ON lamps on PI panel are on. _____ SAT
NOTE: Selecting SEQ and AUTO mode on CRD panel is not desired in this case.		

EXAMINER CUES	EXAMINEE ACTIONS	STANDARD
	15. Examinee selects RUN on SPEED SELECTOR switch on CRD panel.	15. CRD speed selector switch on CRD panel in RUN position.
	*16. Examinee withdraws CRG-4 to 100% by manipulating CRD control handle to WITHDRAW position, then releases CRD control handle to neutral position when CRG-4 red OUT LIMIT lamp is illuminated on CRD panel.	16. CRG-4 is at its out limit as indicated by the red CRG-4 OUT LIMIT lamp illuminated on CRD panel, and all eight CRG-4 rods are at their individual out limits as indicated by all eight CRG-4 red OUT LIMIT lamps illuminated on PI panel. _____ SAT

EXAMINER CUES	EXAMINEE ACTIONS	STANDARD
NOTE: CRD panel will already be in MANUAL and SEQ-OR (sequence override) mode, with ALL Group-4 rods selected on the SINGLE and GROUP SELECT SWITCHES.	*17. Examinee transfers CRG-4 back to its hold bus per section 3.2.3 of 1105-9 as follows: ♦ Depresses GROUP/AUXIL pushbutton and verifies AUXIL lamp illuminates ♦ Selects JOG on SPEED SELECTOR switch ♦ Verifies SY (synch) lamp illuminates ♦ Depresses CLAMP push-button and verifies amber CLAMP lamp illuminates ♦ Depresses MAN TRANS pushbutton, and verifies TR CF lamp goes off, and verifies individual Group-4 rod CONTROL ON lamps (white) on PI panel (PC) go off ♦ Depresses CLAMP REL pushbutton and verifies green CLAMP REL lamp illuminates ♦ Depresses GROUP/AUXIL pushbutton and verifies GROUP lamp illuminates ♦ Selects OFF on GROUP SELECT SWITCH ♦ Selects OFF on SINGLE SELECT SWITCH ♦ Depresses TRANS RESET pushbutton and verifies white CONTROL ON lamp for Group-4 on CRD panel goes off, and verifies TRANS RESET lamp illuminates ♦ Depresses SEQ pushbutton ♦ Selects RUN on SPEED SELECTOR switch	17. All CRG-4 rods are on hold bus as evidenced by: white TR CF and CRG-4 CONTROL ON lamps on CRD panel off, and all eight CRG-4 white CONTROL ON lamps on PI panel are off. _____ SAT
NOTE: It is not required to transfer CRD panel back to SEQ and RUN mode, and it is not desired to select AUTO mode.		

EXAMINER CUES	EXAMINEE ACTIONS	STANDARD
If examinee inquires about desired final status of CRD panel, as Shift Foreman direct examinee to leave CRD panel in manual.	18. Examinee leaves CRD panel in manual mode following transfer of CRG-4 back to hold bus.	18. CRD panel in manual mode as indicated on CRD panel by white MAN lamp on and red AUTO lamp off.

(*) Denotes Critical Element.

EVALUATION: SAT:_____ UNSAT:_____

JPM CHANGE HISTORY PAGE

REVISION	DATE	REFERENCE TITLE	DESCRIPTION (Include AI # if Appropriate)

TMI-1 OPERATOR TRAINING REQUALIFICATION PROGRAM

JOB PERFORMANCE MEASURE

POSITION: SRO/RO

TITLE:	Perform a Recovery from High Temperature Letdown Isolation.
TASK NUMBER:	004C010101
EVALUATION METHOD:	PERFORM: X SIMULATE: ____
EVALUATION LOCATION:	SIMULATOR: X IN-PLANT: ____ CONTROL ROOM: ____
APPROXIMATE COMPLETION TIME:	15 Minutes
IMPORTANCE RATING (TIF):	TMI=3.19 NRC=3.6 A4.06
TOOLS AND EQUIPMENT:	OP 1104-2, Makeup and Purification System
EXAMINEE REFERENCES:	OP 1104-2, Makeup and Purification System Alarm Response Procedure D-2-1
10CFR55.45:	(a)(4), (6).

	Signature	Date
Submitted By:	D Witt	10/5/99
Validated By:	[illegible]	10/18/99
Reviewed By: Lead Inst., Ops. Training or Lead Inst., Sim. Training	[illegible]	10/18/99
Operations Training Manager	R Farnlo	10/19/99
Approved By: Plant Operations Director	D W [illegible]	12/3/99

SIMULATOR CONDITIONS:

Initialize at IC15, 16, or 17, and go to RUN.

Place IC-P-1A and 1B extension controls in pull-to-lock until MU-V-3 closes on high temperature interlock then restart IC-P-1A.

Insert the following overrides "ON" to simulate high temperature closure of MU-V-2A, 2B and MU-V-3:

08A9S19-ZDISSMUV2A(1)CLS PCR MU-V-2A RC LD FROM CLR CS

08A9S12-ZDISSMUV2B(1)CLS PCR MU-V-2B RC LD FROM CLR CS

02A5S56-ZDIPBCMUV3 ON CC MU-V-3 CLOSE PUSHBUTTON

EXAMINER PREVIEW:

This task deals with restoring normal letdown flow following high letdown temperature isolation of MU-V-2A, 2B, and MU-V-3.

The sequence of events which should be followed in the conduct of this JPM is as follows:

1. Read or otherwise inform the Examinee of the information contained in the "EXAMINEE PREVIEW" section of this JPM.
2. Inform the Examinee of the TASK CONDITIONS.
3. Allow the Examinee 2-3 minutes to scan the console.
4. Begin the cueing sequence as described in the EXAMINER CUES section.

A certain amount of liberty (questioning or cueing beyond the bounds of the "EXAMINER CUES") may be taken by the Examiner in trying to extract the requisite information from the Examinee, however, care must be taken to ensure that you do not COACH the Examinee.

To complete this task successfully, the Examinee must complete each critical element (an element of the task which, if omitted or performed incorrectly, would result in a failure to meet the "TASK STANDARD") correctly.

TASK STANDARDS:

Normal RCS letdown flowpath through both letdown coolers, block orifice (MU-V-4), and a makeup demineralizer (MU-K-1) has been established with sustained flow of 50±5 gpm. MU-V-5 and MU-V-70A are closed.

This sheet is available for the examinee to review

EXAMINEE PREVIEW:

For this event you are assigned the duties of the Primary CRO.

The instructor/examiner will act as the Secondary CRO and the SF.

The auxiliary instructor is available to act as Auxiliary Operators on the radio or page system.

When you are told to begin, you will respond to the cues or indications which the Examiner will provide to you either verbally or by the simulator.

You are to respond as you would in the plant for a real condition.

TASK CONDITIONS:

The Reactor is at 100% power.

MU-V-2A, 2B and MU-V-3 automatically closed on high letdown temperature due to temporary loss of ICCW system flow.

ICCW system flow has been returned to normal.

Your task will be to restore letdown flow to normal via the block orifice and MU-K-1A in accordance with 1104-2.

EXAMINER CUES	EXAMINEE ACTIONS	STANDARD
As the Shift Foreman, direct examinee to reestablish normal letdown flow IAW 1104-2.	*1. Examinee closes MU-V-6A/B by depressing the CLOSE pushbutton on CC.	1. MU-V-6A and 6B closed as indicated by their green CLOSE lights illuminated on CC. _____ SAT
ICO-ROLEPLAY as AO: When directed by examinee, use MUR01 to open MU-V-70A, and inform examinee when it is open.	*2. Examinee directs AO to open MU-V-70A.	2. MU-V-70A is open as reported by AO using radio or page. _____ SAT
	3. Examinee verifies normal ICCW system flow restored to letdown coolers.	3. Normal ICCW system flow (650-1300 gpm) indicated on IC-5-FI (CR), and IC-V-1A and IC-V-1B are open (CC).
ICO-ROLEPLAY: When directed by examinee to place MU-V-2A/B High Temperature Interlock in "BYPASS", delete active overrides on MU-V-2A and 2B. Then, inform examinee that task is completed. ICO-ROLE PLAY: When directed by examinee to place MU-V-3 High Temperature interlock in "BYPASS", delete active override on MU-V-3. Then, inform examinee that task is completed.	*4. Examinee directs AO to place MU-V-2A/B High Temperature Interlock in "BYPASS" on 1B ES Valves MCC, Unit 5D; and place MU-V-3 High Temperature interlock in "BYPASS" on T-85.	4. MU-V-2A/B High Temperature Interlock is in "BYPASS" as reported by AO _____ SAT MU-V-3 High Temperature interlock is in "BYPASS" as reported by AO. _____ SAT
	*5. Examinee closes MU-V-4 by depressing the CLOSE pushbutton on CC, and sets MU-V-5 demand at 0% by rotating the thumbscrew on the Bailey Controller on CC.	5. MU-V-4 is closed as indicated by its green CLOSE light illuminated on CC, and MU-V-5 demand is at 0%, as indicated on CC controller. MU-V-4 _____ SAT MU-V-5 _____ SAT

EXAMINER CUES	EXAMINEE ACTIONS	STANDARD
	*6. Examinee opens MU-V-2A and MU-V-2B by rotating their control switches on PCR to "OPEN" and then releasing.	6. MU-V-2A and 2B are open as indicated by red status lamps on CC and yellow status lamps on PCR. MU-V-2A _____ SAT MU-V-2B _____ SAT
	*7. Examinee pushes and holds MU-V-3 OPEN pushbutton (on CC) and simultaneously sets MU-V-5 demand at 10% by rotating the thumbscrew on its Bailey Controller (on CC).	7. MU-V-3 is OPEN as indicated by its red OPEN light illuminated on CC. MU-V-5 demand at 10%, as indicated on CC. MU-V-3 _____ SAT MU-V-5 _____ SAT
	*8. Examinee releases MU-V-3 pushbutton when the high temperature alarm, MAP D-2-1, clears.	8. MU-V-3 remains open as indicated by its red OPEN light illuminated on CC, and sustained letdown flow (10 gpm) indicated on MU-4FI on CC. _____ SAT
	9. Examinee increases the demand on MU-V-5 at a rate which results in an increase in letdown flow of $\leq$ 2.5 gpm/min on MU-4FI.	9. Letdown flow increased to 50±5 gpm, at $\leq$ 2.5 gpm/min as read on MU-4FI on CC.
Following demonstration of ability to control letdown flow through MU-V-5, allow examinee to increase letdown flowrate to 50±5 gpm without a rate limit.	*10. When letdown flow equals 50±5 gpm, examinee reopens MU-V-4 by pressing its OPEN pushbutton on CC, and concurrently closes MU-V-5 by reducing its controller demand to zero (0) on CC.	10. MU-V-4 open as indicated by red OPEN light illuminated on CC, and MU-V-5 closed as indicated by zero (0) demand on CC. MU-V-4 _____ SAT MU-V-5 _____ SAT

EXAMINER CUES	EXAMINEE ACTIONS	STANDARD
If examinee inquires as to which MU-K-1 to place in service, direct examinee to place MU-K-1A back in service.	*11. Examinee places the isolated demineralizer back in service by depressing the MU-V-6A OPEN pushbutton on CC.	11. MU-V-6A open as indicated by its red OPEN light illuminated on CC. _____ SAT
ICO-ROLEPLAY: When directed use MUR01 to close MU-V-70A. then inform examinee when it is closed.	*12. Examinee directs AO to close MU-V-70A.	12. MU-V-70A is closed as reported by AO over radio or page. _____ SAT
	13. Examinee adjusts ICCW system temperature using NR-V-15A/B on CR as necessary to maintain letdown temperature <125°F on MU5-TI.	13. Letdown temperature is maintained <125°F as indicated on MU5-TI on CC.
ICO-ROLE PLAY: When directed to return MU-V-2A/B and MU-V-3 High Temperature Interlock bypass switches back to "NORMAL," after one minute report task complete.	14. Examinee directs AO to return MU-V-2A/B and MU-V-3 High Temperature Interlock bypass switches back to "NORMAL."	14. MU-V-2A/B and MU-V-3 High Temperature Interlock bypass switches back to "NORMAL" as reported by AO over radio or page.

JPM may be terminated at this time.

(*) Denotes Critical Element.

EVALUATION: SAT:_____ UNSAT:_____

JPM CHANGE HISTORY PAGE

REVISION	DATE	REFERENCE TITLE	DESCRIPTION (Include AI # if Appropriate)
1	10/25/89	N/A	Removed Examinee temperature adjustment of IC coolers.
2	10/12/90	N/A	Removed followup questions, modified for current critical task standards.
3	12/19/90	N/A	Updated to new format for summary page.
4	1/23/91	N/A	Modified examiner preview section and changed to "≤" 2.5GPM.
5	3/11/91	N/A	Removed critical task #6.
6	11/18/91	N/A	Alarm reformat change.
7	8/11/94	N/A	Remove alarm from critical step #5.
8	12/17/97	PCR to OP 1104-2	AI #97-330, modified for MU-V-3 operational changes.
9	11/24/98	1998 JPM Upgrade Project	Numerous editorial changes made. Updated format. Revised wording of TASK STANDARD.
10	10/05/99	Ops. Trng. Handout 3210-99-067	ETTS #24070: Added MU-V-2A & 2B to also close using overrides, and improved JPM editorially per NUREG 1021.

TMI-1 OPERATOR TRAINING REQUALIFICATION PROGRAM

JOB PERFORMANCE MEASURE – ALTERNATE PATH

POSITION: SRO/RO

TITLE:	Respond to decreasing or low RCS pressure.
TASK NUMBER:	0008350501
EVALUATION METHOD:	PERFORM: X SIMULATE:
EVALUATION LOCATION:	SIMULATOR: X IN-PLANT: CONTROL ROOM:
APPROXIMATE COMPLETION TIME:	12 Minutes
IMPORTANCE RATING (TIF):	TMI=3.33 NRC=3.9 A2.02
TOOLS AND EQUIPMENT:	None
EXAMINEE REFERENCES:	1202-29, Pressurizer System Failures H-3-2, SASS Mismatch
10CFR55.45(a):	(3), (4), (6), (12)

	SIGNATURE	DATE
Submitted By:		10-7-99
Validated By:		10/18/99
Reviewed by: Lead Instructor, Operator Training OR Lead Instructor, Simulator Training		10/18/99
Operations Training Manager		10/19/99
Approved By: Plant Operations Director		12/3/99

SIMULATOR CONDITIONS:

IC15, 16, or 17 100% power, steady-state, core age optional.

Place A-RPS channel in manual bypass.

Insert 02A2S03-ZDIRC3BPT1 ON CC-RC3BPT1 NR PRESS. SEL S with value of "OFF" to prevent manual selection of RC3B-PT1.

Insert NI27A at 100% severity over 600 second ramp to fail high (2500 psig) selected RCS pressure transmitter, RC3A-PT1.

After RC-V-1 opens in auto, insert RC29 to fail RC-V-1 at 40%.

FREEZE simulation immediately after inserting RC29 and prior to receiving G-3-8 alarm.

EXAMINER PREVIEW:

This task deals with responding to decreasing RCS pressure due to automatic RCS pressure control system response to a failed RCS pressure transmitter with complete SASS channel failure. It is considered alternate path because RC-V-1 will not close when demanded, requiring its isolation per 1202-29.

The sequence of events which should be followed in the conduct of this JPM is as follows:

1. Read or otherwise inform the Examinee of the information contained in the "EXAMINEE PREVIEW" section of this JPM.
2. Inform the Examinee of the TASK CONDITIONS.
3. Allow the Examinee 2-3 minutes to scan the Console.
4. Begin the cueing sequence as described in the EXAMINER CUES section.

A certain amount of liberty (questioning or cueing beyond the bounds of the "EXAMINER CUES") may be taken by the Examiner in trying to extract the requisite information from the Examinee, however, care must be taken to ensure that you do not COACH the Examinee.

To complete this task successfully, the Examinee must complete each critical element (an element of the task which, if omitted or performed incorrectly, would result in a failure to meet the "TASK STANDARD") correctly.

TASK STANDARDS:

RC-V-1 isolated (RC-V-3 closed) and RC-RV-2 isolated (RC-V-2 closed), to prevent reactor trip on low RCS pressure (1900 psig).

This sheet is available for the examinee to review

EXAMINEE PREVIEW:

For this event you are assigned the duties of the primary CRO.

The instructor/examiner will act as the shift foreman, secondary CRO, and STA.

The auxiliary instructor is available to act as Auxiliary Operators on the radio or page system.

When you are told to begin, you will respond to the cues or indications that the Examiner will provide to you either verbally or by the simulator.

You are expected to perform the required immediate actions of any EP/AP/ATP from memory, but then you may refer to the applicable procedure(s) to verify proper completion of those actions.

You are to respond as you would in the plant for a real condition.

TASK CONDITIONS:

Plant is at 100% power, equilibrium xenon, _____ EFPD.

A-RPS channel is in manual bypass for its monthly surveillance.

No maintenance is currently in progress.

A SASS mismatch has just occurred on the RCS pressure channel.

Your task will be to respond to the SASS mismatch and its affects on the plant.

EXAMINER CUES	EXAMINEE ACTIONS	STANDARD
ICO-Place simulation in RUN. As Shift Foreman, direct examinee to respond to the SASS mismatch on the RCS pressure channel.	1. Examinee compares all console and panel indications of RCS pressure, and recognizes that RC3A-PT1 disagrees with all other indications.	1. RC3A-PT1 recognized as different than all other indications of RCS pressure, as reported by examinee.
As Shift Foreman, acknowledge all reports from examinee concerning failing pressure transmitter, failure of SASS selector system, and failure of RC-V-1 to close in manual.	2. Examinee attempts to select alternate RCS pressure transmitter, RC3B-PT1, by depressing its SASS selector pushbutton on CC, and recognizes its failure to operate.	2. Failure of RCS pressure SASS selector system recognized as indicated by white lamp remaining illuminated for RC3A-PT1.
	3. Examinee transfers RC-V-1 mode control switch on CC to MAN.	3. RC-V-1 mode control switch on CC is in MAN position.
	4. Examinee depresses and holds RC-V-1 CLOSE pushbutton on CC, and recognizes failure of RC-V-1 to close as indicated by both green (CLOSE) and red (OPEN) lamps lit.	4. RC-V-1 recognized as failed open by both its green (CLOSE) and red (OPEN) lamps lit on CC, and continued RCS pressure decrease.
	*5. Examinee closes RC-V-3 by depressing its CLOSE pushbutton on CC, and verifies RC-V-3 closes as indicated by its green CLOSE lamp on and its red OPEN lamp off.	5. RC-V-3 is closed as indicated by its green CLOSE lamp on and its red OPEN lamp off on CC. _____ SAT
If at any time the examinee requests that you (as Shift Foreman) implement 1202-29, direct the examinee to refer to the procedure as he/she desires.	*6. Examinee operates PZR heater control switches for Banks 4 and/or 5 on CR, and/or PZR pressure controller demand for Banks 1,2,3 on CC as necessary to stop RCS pressure decrease.	6. Pressurizer heater banks 1, 2, 3, 4, and/or 5 energized and RCS pressure decrease has stopped. _____ SAT

EXAMINER CUES	EXAMINEE ACTIONS	STANDARD
If examinee requests permission to block PORV (close RC-V-2) prior to or after its opening, as Shift Foreman grant that permission.	7. Examinee recognizes that PORV will open if RC3A-PT1 continues to fail above 2450 psig; or, examinee diagnoses PORV open by alarms G-1-6, G-1-7, and panel indication DPI-921 when RC3A-PT1 has failed above 2450 psig.	7. Impending or actual PORV opening is recognized by examinee, as indicated by examinee report or actions to block PORV.
If at any time the examinee requests that you (as Shift Foreman) implement 1202-29, direct the examinee to refer to the procedure as he/she desires.	*8. Examinee depresses RC-V-2 CLOSE pushbutton on CC and verifies RC-V-2 closes as indicated by its green CLOSE lamp on and its red OPEN lamp off, and as indicated by no more flow through PORV on DPI-921.	8. RC-V-2 is closed as indicated by its green CLOSE lamp on and its red OPEN lamp off on CC, and PORV flow is terminated as indicated by alarms G-1-6, G-1-7 clearing. _____ SAT

JPM may be terminated when examinee has RCS pressure under control or after reactor trips.

(*) Denotes Critical Element.

EVALUATION: SAT:_____ UNSAT:_____

JPM CHANGE HISTORY PAGE

REVISION	DATE	REFERENCE TITLE	DESCRIPTION (Include AI # if Appropriate)

FILE COPY

TMI-1 OPERATOR TRAINING REQUALIFICATION PROGRAM

JOB PERFORMANCE MEASURE

POSITION: SRO/RO

TITLE:	Transfer Main Feedwater Pump Control between ICS H/A Controller and Full Range Motor Speed Control. (ICS to MSC)
TASK NUMBER:	0598060401
EVALUATION METHOD:	PERFORM: X SIMULATE: ____
EVALUATION LOCATION:	SIMULATOR: X IN-PLANT: ____ CONTROL ROOM: ____
APPROXIMATE COMPLETION TIME:	10 Minutes
IMPORTANCE RATING (TIF):	3.30 NRC = 3.2 K1.07
TOOLS AND EQUIPMENT:	None.
EXAMINEE REFERENCES:	OP 1106-3, Feedwater System
10CFR55.45:	(a)(4), (6)

	SIGNATURE	DATE
Submitted By:	[signature]	12/23/98
Validated By:	[signature]	12/23/98
Reviewed By: Lead Inst. – Ops. Training Or Lead Inst. - Sim. Training	[signature]	12/23/98
Reviewed By: Operations Training Manager	[signature]	12/23/98
Approved By: Plant Operations Director	[signature]	12-24-98

GPU Nuclear Inc
Middletown PA
Copyright 1998

SIMULATOR CONDITIONS:

Initialize the trainer at IC15, 16, or 17.

Go to RUN.

EXAMINER PREVIEW:

This JPM deals with transferring FW-P-1A speed control from the ICS controller ("ICS-36A") to the Motor Speed Changer ("Governor"), as a "planned evolution."

The trainer will be turned over to the Examinee in a condition with the reactor operating at full power. The Examinee will be given direction from the examiner acting as the Shift Foreman to transfer FW-P-1A speed control from the ICS controller (ICS-36A) to the motor speed changer ("governor"), to support subsequent maintenance on the ICS controller.

The sequence of events which should be followed in the conduct of this JPM is as follows:

1. Read or otherwise inform the Examinee of the information contained in the "EXAMINEE PREVIEW" section of this JPM.
2. Inform the Examinee of the TASK CONDITIONS.
3. Allow the Examinee 2-3 minutes to scan the Console.
4. Begin the cueing sequence as described in the EXAMINER CUES section.

A certain amount of liberty (questioning or cueing beyond the bounds of the "EXAMINER CUES") may be taken by the Examiner in trying to extract the requisite information from the Examinee, however, care must be taken to ensure that you do not COACH the Examinee.

To complete this task successfully, the Examinee must complete each critical element (an element of the task which, if omitted or performed incorrectly, would result in a failure to meet the "TASK STANDARD") correctly.

TASK STANDARDS:

FW-P-1A is under full range Motor Speed Changer control, NOT under ICS control, and no reactor trip occurred as a result of improper transfer or FW-P-1A speed control by examinee.

GPU Nuclear, Inc.
Middletown, PA
Copyright 1998

This sheet is available for the examinee to review

EXAMINEE PREVIEW:

For this event you are assigned the duties of the Secondary CRO.

The instructor/examiner will act as the Primary CRO and SF.

The auxiliary instructor is available to act as Auxiliary Operators on the radio or page system.

When you are told to begin, you will respond to the cues or indications which the Examiner will provide to you either verbally or by the simulator.

You are to respond as you would in the plant for a real condition.

TASK CONDITIONS:

The Reactor is at power.

There is no surveillance activity in progress at this time that could affect plant operations.

Maintenance is planning repairs on the E/P converter for the ICS speed control system for FW-P-1A.

GPU Nuclear, Inc.
Middletown, PA
Copyright 1998

EXAMINER CUES	EXAMINEE ACTIONS	STANDARD
Inform Examinee that in order to support maintenance on the E/P converter for FW-P-1A, it is desirable to transfer speed control of FW-P-1A to its Motor Speed Changer. There is an AO standing by FW-P-1A speed control cabinet with a radio to support you. ROLEPLAY: As the Shift Foreman, direct Examinee to perform this planned evolution.	1. Examinee directs AO to observe the FW-P-1A motor speed changer (MSC) handwheel for movement.	1. AO directed to observe the FW-P-1A motor speed changer (MSC) handwheel to confirm movement. AO responds that he is in position to observe the MSC handwheel for FW-P-1A.
NOTE: This step may result in a speed decrease which is acceptable for the next step (3). ICO-ROLEPLAY: As the AO at FW-P-1A, when examinee inquires about MSC handwheel movement, inform examinee that the MSC handwheel moved.	2. Examinee places the "1A FPT GOVERNOR" control switch (MSC) on CL in the "SLOW LOWER" position for a short time (5-10 seconds) while AO confirms the MSC handwheel responds to the signal. Examinee may observe a small speed decrease.	2. "1A FPT GOVERNOR" control switch (MSC) on CL is placed in the "SLOW LOWER" position for a short time (5-10 seconds) to confirm movement. Confirmation of MSC handwheel is received from the AO at FW-P-1A.
NOTE: The amount of speed decrease on FW-P-1A must be sufficient to ensure MSC controller has control, but must not be significant enough to cause a main feedwater transient that results in an automatic reactor trip.	*3. Examinee places and holds the "1A FPT GOVERNOR" (MSC) control switch on CL in "SLOW LOWER" position until a small decrease in speed (50-100 rpm) is observed on FW-P-1A speed recorder or PPC point A0320.	3. "1A FPT GOVERNOR" control switch on CL is placed and held in "SLOW LOWER" position until a small decrease in speed is observed on FW-P-1A speed recorder or PPC point A0320. _____ SAT
	*4. Examinee depresses the HAND button on the ICS controller for FW-P-1A to place the controller in HAND.	4. FW-P-1A ICS controller transferred to HAND, as indicated by white HAND lamp illuminated and red AUTO lamp off on the ICS station. _____ SAT

GPU Nuclear, Inc.
Middletown, PA
Copyright 1998

EXAMINER CUES	EXAMINEE ACTIONS	STANDARD
NOTE: Operation of the "1A FPT GOVERNOR" (MSC) control switch may not be necessary as the ICS controller demand is raised. This would indicate complete transfer of FW-P-1A speed control from ICS to the MSC.	*5. Examinee slowly raises demand on FW-P-1A ICS controller using its toggle switch, and provides "SLOW LOWER" signals on the "1A FPT GOVERNOR" (MSC) control switch as necessary to hold FW-P-1A speed fairly constant.	5. FW-P-1A speed control completely transferred from ICS to Motor Speed Changer control as evidenced by no further increase in FW-P-1A speed as ICS demand is increased. _____ SAT
	6. Examinee raises FW-P-1A ICS station demand to 100% using its toggle switch.	6. FW-P-1A ICS station demand raised to 100% as indicated on ICS station demand meter.
ICO-ROLE PLAY: If examinee asks, as AO at FW-P-1A inform examinee that you heard a "click" in the area of the MSC handwheel.	*7. Examinee turns the switch for "FP A TURBINE FULL RANGE MANUAL SPEED CONTROL" to "ON".	7. Switch for "FP A TURBINE FULL RANGE MANUAL SPEED CONTROL" in the "ON" position. _____ SAT
ROLEPLAY: As the Shift Foreman, direct examinee to control FW-P-1A speed as necessary to adjust flows between the main feedwater pumps to within 1E6 lbm/hr of each other, while maintaining lowest main feedwater valve D/P at 35 ± 10 psid.	8. Examinee manipulates "1A FPT GOVERNOR" (MSC) control switch as necessary to adjust FW-P-1A/B flows and lowest main feedwater valve D/P within limits specified by Shift Foreman.	8. "1A FPT GOVERNOR" (MSC) control switch manipulated to the "SLOW RAISE" and/or "SLOW LOWER" position as necessary to obtain values specified by Shift Foreman for: pump flows indicated on FW-FI-7 and FW-FI-8 on CL, and lowest main feedwater valve D/P indicated on SP-11A/B-PI on CL.
JPM may be terminated when: examinee has exhibited MSC control of FW-P-1A, or lack of MSC control of FW-P-1A; or the reactor trips as a result of improper examinee actions.	(*) Denotes Critical Element.	

EVALUATION: SAT:_____ UNSAT:_____

GPU Nuclear, Inc.
Middletown, PA
Copyright 1998

JPM CHANGE HISTORY PAGE

REVISION	DATE	REFERENCE TITLE	DESCRIPTION (Include AI # if Appropriate)
4	12/23/98	1998 JPM Upgrade Project PCR 1-OS-98-0304 to OP 1106-3, rev.78	Converted to WORD97 & upgraded format. AI 98-156: Changed task elements considerably to conform with new method for "planned" changes in MFW pump speed control.

GPU Nuclear, Inc.
Middletown, PA
Copyright 1998

TMI-1 OPERATOR TRAINING REQUALIFICATION PROGRAM

JOB PERFORMANCE MEASURE - ALTERNATE PATH

POSITION: SRO/RO

TITLE:	Perform the required actions if high Containment temperature cannot be controlled within specific limits.
TASK NUMBER:	0220070401
EVALUATION METHOD:	PERFORM: X SIMULATE: ____
EVALUATION LOCATION:	SIMULATOR: X IN-PLANT: ____ CONTROL ROOM: ____
APPROXIMATE COMPLETION TIME:	15 Minutes
IMPORTANCE RATING (TIF):	TMI=3.17 NRC=3.2 A4.02
TOOLS AND EQUIPMENT:	Copy of 1104-38, section 3.2.
EXAMINEE REFERENCES:	1104-38, Reactor Building Emergency Cooling Water System
10CFR55.45:	(a)(4), (6), (8).

	SIGNATURE	DATE
Submitted By:	[signature]	11-30-99
Validated By:	[signature]	12/6/99
Reviewed by: Lead Instructor, Operator Training OR Lead Instructor, Simulator Training	[signature]	12/6/99
Operations Training Manager	[signature]	12/9/99
Approved By: Plant Operations Director	[signature]	12/17/99

SIMULATOR CONDITIONS:

Initialize to IC15, 16, or 17.

Insert Malfunction MS02A at 0.2% severity.

Insert Malfunction RW08 at 0% severity to fail RR-V-6.

EXAMINER PREVIEW:

This JPM deals with responding to high containment temperatures due to a small secondary steam leak, requiring initiation of RB Emergency Cooling per 1104-38.

This JPM is considered alternate path because RR-V-6 is failed closed, so RR-V-5 must be used to establish RR cooling flow and control cooler outlet pressures.

The sequence of events which should be followed in the conduct of this JPM is as follows:

1. Read or otherwise inform the Examinee of the information contained in the "EXAMINEE PREVIEW" section of this JPM.
2. Inform the Examinee of the TASK CONDITIONS.
3. Allow the Examinee 2-3 minutes to scan the Console.
4. Begin the cueing sequence as described in the EXAMINER CUES section.

A certain amount of liberty (questioning or cueing beyond the bounds of the "EXAMINER CUES") may be taken by the Examiner in trying to extract the requisite information from the Examinee, however, care must be taken to ensure that you do not COACH the Examinee.

To complete this task successfully, the Examinee must complete each critical element (an element of the task which, if omitted or performed incorrectly, would result in a failure to meet the "TASK STANDARD") correctly.

TASK STANDARDS:

RB Emergency Cooling has been initiated in accordance with 1104-38 as follows:

- RR-P-1A is running.
- RR-V-1A is open.
- RR-V-3A and 3B are open.
- RR-V-4A and 4B are open.
- RR-V-5 is throttled open.
- RR-PI-224 and 225 read 55-60 psig.
- PPC points A1049 and A1050 (Area 18, Group 4) indicate >0 gpm.

This sheet is available for the examinee to review

EXAMINEE PREVIEW:

For this event you are assigned the duties of the 3rd CRO.

The Instructor/Examiner will act as the Console CROs and the SF.

The Auxiliary Instructor is available to act as Auxiliary Operators on the radio or page system.

When you are told to begin, you will respond to the cues or indications that the Examiner will provide to you either verbally or by the Simulator.

You are to respond as you would in the Plant for a real condition.

TASK CONDITIONS:

The Plant is at 100% power. ICS is in full AUTO.

There is a small steam leak suspected inside containment that is causing an increase in RB temperature and pressure.

Your task will be to initiate RB Emergency Cooling with RR-P-1A and the "Alpha" and "Bravo" coolers per 1104-38, section 3.2.

The Plant Operations Director has approved RB Emergency Cooling system operation, and both trains of the system have been verified aligned for ES standby.

EXAMINER CUES	EXAMINEE ACTIONS	STANDARD
EXAMINER-ROLE PLAY: As the SF, instruct the examinee to initiate RB Emergency Cooling, with RR-P-1A and the "Alpha" and "Bravo" coolers. Provide examinee with a copy of 1104-38, section 3.2, with steps 3.2.1.1, 3.2.1.2 and 3.2.2.1 initialed for trains A & B.	1. Examinee recognizes that steps 3.2.1.1, 3.2.1.2, and 3.2.2.1 have been initialed as completed.	1. Steps 3.2.1.1, 3.2.1.2, and 3.2.2.1 recognized as completed and initialed.
ICO-ROLE PLAY: When directed, use CCR32 to close NS-V-85, and use CCR31 to verify NS-V-8 closed. Then after 60 - 90 seconds, report task is complete to control room.	2. Examinee directs AO to close NS-V-85 and verify NS-V-8 is closed.	2. NS-V-85 and NS-V-8 are closed as reported by AO.
NOTE: RR-V-10A opens automatically when RR-P-1A is started.	*3. Examinee starts RR-P-1A on CC by rotating the extension control in the clockwise direction and verifying RR-V-10A opens by its status indication on PCR.	3. RR-P-1A running as indicated by its red breaker status lamp on, and its green breaker status lamp off, on CC. RR-P-1A _____ SAT RR-V-10A open as indicated by its amber ES status lamp illuminated on PCR.
NOTE: RR-V-3's are normally open for ES standby.	4. Examinee verifies open RR-V-3A and 3B using their pushbutton lamps on CR.	4. RR-V-3A and 3B are open as indicated by their red OPEN lamps on, and green CLOSE lamps off, on CR.
	*5. Examinee opens RR-V-4A and 4B by depressing their OPEN pushbuttons on CR.	5. RR-V-4A and 4B are open as indicated by their red OPEN lamps on, and green CLOSE lamps off, on CR. RR-V-4A _____ SAT RR-V-4B _____ SAT

EXAMINER CUES	EXAMINEE ACTIONS	STANDARD
EXAMINER-ROLE PLAY: Inform examinee that ISPH water level is >277' as indicated on SR-LI-1172. NOTE: RR-V-10A automatically closes when RR-V-1A is full open.	*6. Examinee opens RR-V-1A by depressing its OPEN pushbutton on CR, and verifies that RR-V-10A closes using its status indication on PCR.	6. RR-V-1A is open as indicated by its red OPEN lamp on, and its green CLOSE lamp off, on CC. RR-V-1A _____ SAT RR-V-1OA closed as indicated by its blue ES status lamp illuminated on PCR.
NOTE: Due to RR-V-6 being failed closed, there will be no flow through RB emergency coolers when RR-V-4A, 4B, and 1A are opened. **ICO-ROLE PLAY:** If examinee requests local status of RR-V-6, after a 30 second time delay inform examinee that RR-V-6 indicates closed. If directed to manually open RR-V-6, after a 60 second time delay inform examinee that RR-V-6 is bound shut and cannot be opened.	7. Examinee recognizes very high pressure on outlets of "Alpha" and "Bravo" RB emergency coolers (>60 psig), as read on RR-PI-224 and 225 on CR.	7. "Alpha" and "Bravo" RB emergency coolers outlet pressures as read on RR-PI-224 and 225 on CR are recognized as much higher than 60 psig.
EXAMINER-ROLE PLAY: If at any time examinee requests RR cooler outlet flow rates from PPC, inform examinee of actual indicated flows on PPC points A1049 and A1050.	*8. Examinee throttles open RR-V-5 by depressing its OPEN and CLOSE pushbuttons on CR as necessary to obtain 55-60 psig on RR-PI-224 and 225.	8. RR-V-5 throttled open, and RR-PI-224 and 225 on CR indicate 55-60 psig. _____ SAT

EXAMINER CUES	EXAMINEE ACTIONS	STANDARD
EXAMINER-ROLE PLAY: If examinee inquires as to whether additional RR cooling is needed with RR-P-1B and "Charlie" cooler, state that time is needed with two coolers in service to evaluate their effectiveness on limiting RB pressure and temperature.	9. Examinee monitors RR cooler outlet flows on PPC points A1049 and A1050 (Area 18,Group 4), and verifies total flow on RR-P-1A is less than or equal to 5800 gpm.	9. PPC points A1049 and A1050 indicate flow through "Alpha" and "Bravo" RB emergency coolers, and total flow is less than or equal to 5800 gpm.

JPM may be terminated when examinee reports task complete.

(*) Denotes Critical Element.

EVALUATION: SAT:_____ UNSAT:_____

JPM CHANGE HISTORY PAGE

REVISION	DATE	REFERENCE TITLE	DESCRIPTION (Include AI # if Appropriate)
1	03/10/99	N/A	Deleted grade sheet, upgrade Simulator terminology, formatted preview sheet, and converted to word97. A new Section was added to address AP 1001G requirements for use of OP 1104-38 during the performance. A subsequent review, and approval of these actions are required by a Licensed Operator.
2	11/30/99	1104-38, rev. 40, 07/30/99	1. Numerous editorial improvements. 2. Added requirement to place "A" and "B" emergency coolers in service.

TMI-1 OPERATOR TRAINING REQUALIFICATION PROGRAM

JOB PERFORMANCE MEASURE

POSITION: SRO/RO

TITLE:	Return an Engineered Safeguards Bus (4160) to its Normal Supply
TASK NUMBER:	0620080101
EVALUATION METHOD:	PERFORM: X SIMULATE:
EVALUATION LOCATION:	SIMULATOR: X IN-PLANT: CONTROL ROOM:
APPROXIMATE COMPLETION TIME:	12 Minutes
IMPORTANCE RATING (TIF):	TMI=3.50 NRC=3.1 A2.09
TOOLS AND EQUIPMENT:	Copy of 1202-2, Attachment 4
EXAMINEE REFERENCES:	1202-2, Loss of Station Power
10CFR55.45(a):	(2), (3), (6), (12), (13)

	SIGNATURE	DATE
Submitted By:		11-22-99
Validated By:		11/24/99
Reviewed by: Lead Instructor, Operator Training OR Lead Instructor, Simulator Training		11/24/99
Operations Training Manager		12/1/99
Approved By: Plant Operations Director		12/3/99

SIMULATOR CONDITIONS:

Initialize at IC15, 16, or 17.

Start EG-Y-1A by depressing its START pushbutton on CR.

Synchronize G1-02 with 1D 4160V bus, and close G1-02.

Open 1SB-D2.

Turn synchroscope off.

Acknowledge and reset all EG-Y-1A trouble alarms.

EXAMINER PREVIEW:

This task deals with returning the 1D 4160V bus back to its normal power supply, the 1B auxiliary transformer. The examinee must manipulate the necessary diesel and breaker controls to accomplish this task.

The sequence of events which should be followed in the conduct of this JPM is as follows:

1. Read or otherwise inform the Examinee of the information contained in the "EXAMINEE PREVIEW" section of this JPM.
2. Inform the Examinee of the TASK CONDITIONS.
3. Allow the Examinee 2-3 minutes to scan the Console.
4. Begin the cueing sequence as described in the EXAMINER CUES section.

A certain amount of liberty (questioning or cueing beyond the bounds of the "EXAMINER CUES") may be taken by the Examiner in trying to extract the requisite information from the Examinee, however, care must be taken to ensure that you do not COACH the Examinee.

To complete this task successfully, the Examinee must complete each critical element (an element of the task which, if omitted or performed incorrectly, would result in a failure to meet the "TASK STANDARD") correctly.

TASK STANDARDS:

The 1D 4160V bus is energized by the 1B auxiliary transformer via breaker 1SB-D2, G1-02 breaker is open, and EG-Y-1A is running with no load. During the transfer of power supplies, no 1D 4160V bus under-voltage occurred due to operator error.

This sheet is available for the examinee to review

EXAMINEE PREVIEW:

For this event you are assigned the duties of the third CRO.

The instructor/examiner will act as the primary CRO and the SF.

The auxiliary instructor is available to act as auxiliary operators on the radio or page system.

When you are told to begin, you will respond to the cues or indications that the Examiner will provide to you either verbally or by the simulator.

You are to respond as you would in the plant for a real condition.

TASK CONDITIONS:

The plant is at 100% power, steady-state, _____ EFPD.

The 1D 4160V bus is currently energized by EG-Y-1A after a previous fault pressure relay trip of the 1B auxiliary transformer.

The 1B auxiliary transformer has been returned to service, and all BOP buses were hot bus transferred back to their normal power supply.

Your task will be to transfer the 1D 4160V bus back to the 1B auxiliary transformer in accordance with 1202-2, Attachment 4.

EG-Y-1A will not be shut down as part of this task.

EXAMINER CUES	EXAMINEE ACTIONS	STANDARD
As the Shift Foreman, provide examinee with a copy of 1202-2, Attachment 4, and direct examinee to transfer the 1D 4160V bus back to the 1B auxiliary transformer.	1. Examinee verifies that the Diesel Generator 1A "Manual Voltage Controller" is set at 45%.	1. Diesel Generator 1A "Manual Voltage Controller" on CR is verified to be set at 45% as indicated on the controller pot.
NOTE: All control room controls and indicators for EG-Y-1A are on console right (CR).	*2. Examinee places Diesel Generator 1A "Exciter" selector to the MANUAL position.	2. Diesel Generator 1A "Exciter" selector switch is in the MANUAL position as indicated at the switch. _____ SAT
	3. Examinee maintains 1D 4KV bus voltage at 4000 – 4300 volts using the Diesel Generator 1A "Manual Voltage Controller."	3. 1D 4KV bus voltage reads 4–4.3 kilovolts as indicated on the 4KV Bus 1D Kilovolt meter.
ICO-ROLE PLAY: As AO at EG-Y-1A, when directed to place the unit/parallel droop switch in the parallel position, use **EGR09**. Then report that the task is complete.	*4. Examinee directs AO at EG-Y-1A to place local "unit/parallel droop switch" in the PARALLEL position.	4. EG-Y-1A unit/parallel droop switch is in the PARALLEL position as reported by the AO. _____ SAT
ICO-ROLE PLAY: As AO at EG-Y-1A, when directed to slowly increase governor speed droop setting, insert **EGR07** over 120 second ramp to 70%. When the final value of EGR07 is 70%, report that the task is complete.	*5. Examinee directs AO to slowly increase EG-Y-1A local governor speed droop setting to 70%, and examinee adjusts EG-Y-1A speed to maintain 900 rpm and 60Hz frequency during the speed droop setting adjustment.	5. EG-Y-1A governor speed droop is slowly raised to 70% as reported by AO, as EG-Y-1A speed and frequency is maintained at 900 ± 50 rpm and 59-61 hertz as indicated on Diesel Generator 1A speed and frequency meters. 900 ± 50 rpm _____ SAT 59-61 hertz _____ SAT

EXAMINER CUES	EXAMINEE ACTIONS	STANDARD
NOTE: All control room controls and indicators for EG-Y-1A are on console right (CR).	*6. Examinee places the synchroscope into operation by placing the switch to immediate right of "1SB-D2 Bus 1D Feeder" control switch to the ON position.	6. Synchroscope for 1SB-D2 breaker is ON, as indicated by scope needle movement and its white lamps cycling bright to dim as it rotates. _____ SAT
	*7. Examinee adjusts the Diesel Generator 1A "Manual Voltage Controller" to match 1D bus voltage with system voltage by -0 to +50 volts, as indicated by the two digital voltmeters on the immediate left of the synchroscope.	7. 1D 4160V bus voltage is adjusted to within -0 to +.05 kilovolts of system voltage, as indicated by the two digital voltmeters on the immediate left of the synchroscope. _____ SAT
	*8. Examinee adjusts the Diesel Generator 1A "Governor" control to adjust diesel speed until the synchroscope is moving slowly in the "FAST" (clockwise) direction.	8. Diesel Generator 1A speed is adjusted such that the synchroscope needle is moving slowly in the "FAST" (clockwise) direction. _____ SAT
	*9. Examinee closes 1SB-D2 breaker using its control switch, when the synchroscope needle indicates 1155 to 1200 on the dial.	9. 1SB-D2 breaker is closed as indicated by its red breaker status lamp on and its green breaker status lamp off. _____ SAT
	10. Examinee reduces Diesel Generator 1A governor setting to shift load from Diesel Generator 1A to the 1B Auxiliary Transformer.	10. Diesel Generator 1A megawatt load is reduced as indicated by decreasing value on Diesel Generator 1A Megawatt meter.

EXAMINER CUES	EXAMINEE ACTIONS	STANDARD
NOTE: All control room controls and indicators for EG-Y-1A are on console right (CR).	11. Examinee de-energizes synchroscope by placing its control switch to immediate right of "1SB-D2 Bus 1D Feeder" control switch to the OFF position.	11. Synchroscope on console right is off as indicated by its control switch to immediate right of "1SB-D2 Bus 1D Feeder" control switch being in the OFF position.
	*12. Examinee reduces Diesel Generator 1A governor setting to obtain ≈0.3 MW load as indicated on Diesel Generator 1A Megawatt meter.	12. Diesel Generator 1A load is ≈0.3 MW as indicated on Diesel Generator 1A Megawatt meter. _____ SAT
	*13. Examinee opens G1-02 breaker using its control switch.	13. G1-02 breaker is open as indicated by its green breaker status lamp on and its red breaker status lamp off. _____ SAT

JPM may be terminated upon successful completion of task or if operator causes 1D 4160V bus undervoltage at any time during the task.

(*) Denotes Critical Element.

EVALUATION: SAT:_____ UNSAT:_____

JPM CHANGE HISTORY PAGE

REVISION	DATE	REFERENCE TITLE	DESCRIPTION (Include AI # if Appropriate)
5	11/22/99		Updated JPM format and simulator function terminology.

TMI-1 OPERATOR TRAINING REQUALIFICATION PROGRAM

JOB PERFORMANCE MEASURE

POSITION: SRO/RO

TITLE:	Energize the Reactor Protection System
TASK NUMBER:	0120010101
EVALUATION METHOD:	PERFORM: X SIMULATE: ____
EVALUATION LOCATION:	SIMULATOR: X IN-PLANT: ____ CONTROL ROOM: ____
APPROXIMATE COMPLETION TIME:	7 Minutes
IMPORTANCE RATING (TIF):	TMI=3.08 NRC=3.6 A2.02
TOOLS AND EQUIPMENT:	Copy of OP 1107-2, Enclosure 6, with steps 3.h.1. - 3.h.4 signed off.
EXAMINEE REFERENCES:	OP 1107-2, Emergency Electrical System (rev. 97)
10CFR55.45:	(a)(3), (4), (6).

	SIGNATURE	DATE
Submitted By:	[signature]	11/22/99
Validated By:	[signature]	11/24/99
Reviewed by: Lead Instructor, Operator Training OR Lead Instructor, Simulator Training	[signature]	11/24/99
Operations Training Manager	[signature]	12/1/99
Approved By: Plant Operations Director	[signature]	12/3/99

SIMULATOR CONDITIONS:

Initialize the trainer at IC15, 16, or 17.

Perform the following in the D-RPS cabinet:

1. Insert Manual Bypass key (#6) and turn it clockwise 90 degrees.
2. Open and then re-close the system AC power breaker to the right of the "AVAILABLE" lamp.
3. Select "OFF" on both power supplies for NI-4, and one for NI-8.
4. Select "OFF" on the RC Pump Contact Monitor power supply.
5. Open the (2) DC Power Supply breakers (per bakelite tags).
6. Open the System AC Supply breaker (per bakelite tag).
7. Remove the Shutdown Bypass Key if installed.

The following **REMOTE FUNCTIONS** will be used during the JPM: **RDR81, 3 and 4**, to reset CB3 and CB4.

EXAMINER PREVIEW:

This JPM deals with re-energizing the "D" RPS cabinet.

The examinee will be told that power was lost to VBD last shift and has now been restored. The examinee will be instructed to re-energize the D-RPS channel and place it in normal service.

The sequence of events which should be followed in the conduct of this JPM is as follows:

1. Provide examinee with the information contained in the "EXAMINEE PREVIEW" section of this JPM.
2. Inform the examinee of the TASK CONDITIONS.
3. Allow the examinee 2-3 minutes to scan the Console.
4. Begin the cueing sequence as described in the EXAMINER CUES section.

A certain amount of liberty (questioning or cueing beyond the bounds of the "EXAMINER CUES") may be taken by the Examiner in trying to extract the requisite information from the Examinee, however, care must be taken to ensure that you do not COACH the Examinee.

To complete this task successfully, the examinee must complete each critical element - an element of the task which, if omitted or performed incorrectly, would result in a failure to meet the "TASK STANDARD."

TASK STANDARD:

D-RPS channel and its subsystem trip relay are energized (MAP alarm G-1-2 clear), both NI-4 and NI-8 power supplies are energized (MAP alarm G-2-4 clear), and D-RPS channel is NOT in Manual Bypass (MAP alarm G-3-1 clear).

This sheet is available for the examinee to review

EXAMINEE PREVIEW:

For this event you are assigned the duties of the third CRO.

The instructor/examiner will act as the Console CRO and the SF.

The auxiliary instructor is available to act as Auxiliary Operators on the radio or page system.

When you are told to begin, you will respond to the cues or indications that the Examiner will provide to you either verbally or by the simulator.

You are to respond as you would in the plant for a real condition.

TASK CONDITIONS:

The plant is at 100% power.

During the last shift, power to VBD was lost due to D-Inverter failure.

D-Inverter and VBD have been restored.

D-RPS channel was secured per 1107-2, Enclosure 6, steps 3.h.1-4. It has been placed in Manual Bypass.

MAP alarms are as indicated.

Your task will be to re-energize and reset the D-RPS channel and restore it to normal operation.

There is a CRO available in the Relay Room to support you as needed.

EXAMINER CUES	EXAMINEE ACTIONS	STANDARD
Provide examinee a copy of 1107-2, Enclosure 6, with steps 3.h.1 through 4 completed and signed off. As the Shift Foreman, direct examinee to re-energize and reset the D-RPS channel and return it to normal operation.	1. Examinee verifies the following items: Power available light on. System AC Power Breaker closed. Fan Breakers closed.	1. The following items verified and signed off in procedure: ♦ Power available light on ♦ System AC Power Breaker closed ♦ Fan Breakers closed
	*2. Examinee closes both DC power supply breakers - one in each subassembly – as labeled with bakelite tags.	2. Both DC power supply breakers (2) are closed as indicated by breaker positions. _____ SAT
EXAMINER: Acknowledge/reset MAP alarms only if requested by examinee.	*3. Examinee closes the AC system power supply breaker as labeled with bakelite tag.	3. AC power supply breaker is closed as indicated by: breaker position, all D-RPS modules having power restored, MAP alarm G-1-2 clearing, and MAP alarm G-3-1 alarming. _____ SAT
ICO/ROLE-PLAY: Use **REMOTE FUNCTION RDR81 3 and 4** to close CB3 and CB4 when directed by examinee. EXAMINER: Acknowledge/reset MAP alarms only if requested by examinee.	4. Examinee directs CRO in Relay Room to close CB3 and CB4 locally by pressing their CLOSE pushbuttons.	4. CB3 and CB4 closed locally as indicated by MAP Alarm G-1-3 clearing.
	5. Examinee presses the FAULT RESET push-button on the CRD panel (CC) to reset the "F" Electronic Trip.	5. "F" Electronic Trip reset as indicated by PROGRAMMER LAMP FAULT B light out on CRD panel (CC).

EXAMINER CUES	EXAMINEE ACTIONS	STANDARD
EXAMINER: Acknowledge/reset MAP alarms only if requested by examinee.	*6. Examinee re-energizes NI-4 and NI-8, by turning ON the power supply switches and depressing the RESET toggle switches for both NI-4 power supplies and the one NI-8 power supply.	6. NI-4 and NI-8 energized as indicated by voltage on all three power supplies (two for NI-4, one for NI-8), normal NI indications in D-RPS cabinet and on console center, and MAP Alarm G-2-4 clear. _____ SAT
	*7. Examinee re-energizes the RCP contact monitor power supply by turning ON its power supply switch and depressing the RESET toggle switch on the power supply module.	7. Contact Monitor power supply energized as indicated by the CONTACT MONITOR CONTACT STATE lights (4) being dim. _____ SAT
EXAMINER: Inform examinee that you may inform him/her of the bright/dim status of any lamp on RPS.	*8. Examinee resets all bistables in the RPS cabinet by depressing the RESET toggle switches and the OUTPUT MEMORY toggle switches on all tripped bistables in the cabinet.	8. All bistables in the D-RPS cabinet are reset as indicated by their individual OUTPUT STATE lamps being dim. _____ SAT
	*9. Examinee resets the RB Pressure Contact Monitor in the RPS cabinet by depressing the TEST RESET switch on the HIGH BLDG. PRESS. RESET module.	9. The RB Pressure Contact Monitor is reset as indicated by its CONTACT BUFFER red INPUT STATE light being off. _____ SAT
EXAMINER: Acknowledge/reset MAP alarms only if requested by examinee.	*10. Examinee removes D-RPS channel from manual bypass by turning the Manual Bypass Key in the Reactor Trip module 90° counter-clockwise, then removing the key.	10. The D-RPS channel is removed from Manual Bypass as indicated by MAP alarm G-3-1 clearing. _____ SAT

EXAMINER CUES	EXAMINEE ACTIONS	STANDARD
EXAMINER: Acknowledge/reset MAP alarms only if requested by examinee.	11. Examinee verifies D-RPS channel is reset by verifying MAP alarm G-1-2 remains clear after removing channel from manual bypass.	11. D-RPS channel is reset as evidenced by subsystem trip lamp dim on all four RPS channels and MAP alarm G-1-2 clear.

JPM may be terminated at this time.

(*) Denotes Critical Element.

EVALUATION: SAT:_____ UNSAT:_____

JPM CHANGE HISTORY PAGE

REVISION	DATE	REFERENCE TITLE	DESCRIPTION (Include AI # if Appropriate)
1	10/31/89	NA	Modified the "Simulator Conditions" and "Examinee Preview" sections to follow procedural guidance.
2	11/04/90	NA	Decreased "Completion Time" to 7 minutes, added Remote Functions used, modified format to existing standard, removed follow-up questions.
3	01/23/91	NA	Updated to current standard, added "Tools and Equipment", modified Examiner Cue #1.
4	11/20/91	NA	Updated for Alarm Reformat.
5	10/26/93	NA	Modified JPM step order due to procedure change.
6	09/11/96	PCR for OP 1107-2	AI 96-071, changed enclosure number, added new verification step #1.
7	11/04/98		Converted to Word97, deleted grading sheet, corrected typos, updated simulator terminology, and changed to D-RPS channel.
8	11/15/99	1107-2, rev. 97.	Updated JPM to revision 97 of 1107-2.

FILE COPY

TMI-1 OPERATOR TRAINING REQUALIFICATION PROGRAM

JOB PERFORMANCE MEASURE

POSITION: AO

TITLE:	Pressurize the core flood tanks
TASK NUMBER:	006A010104
EVALUATION METHOD:	PERFORM:__ SIMULATE: X
EVALUATION LOCATION:	IN-PLANT: X SIMULATOR:__ CONTROL ROOM:
APPROXIMATE COMPLETION TIME:	15 Minutes
IMPORTANCE RATING (TIF):	3.0
TOOLS AND EQUIPMENT:	Copy of OP 1104-1 and 1104-26
EXAMINEE REFERENCES:	OP 1104-1, Core Flooding System OP 1104-26 Nitrogen Supply System
10CFR55.45:	N/A

	SIGNATURE	DATE
Submitted By:	Gregory A. Hack	12/20/99
Validated By:	R. Bakemann	12-20-99
Reviewed by: Lead Instructor, Operator Training OR Lead Instructor, Simulator Training	Ted Mauch	12/21/99
Operations Training Manager	[illegible]	12/21/99
Approved By: Plant Operations Director	[illegible]	12/29/99

GPU Nuclear, Inc.
Middletown, PA
Copyright 1996

SIMULATOR CONDITIONS: N/A

EXAMINER PREVIEW:

This JPM deals with aligning to pressurize the core flood tanks.

The sequence of events which should be followed in the conduct of this JPM is as follows:

1. Read or otherwise inform the Examinee of the information contained in the "EXAMINEE PREVIEW" section of this JPM.
2. Inform the Examinee of the TASK CONDITIONS.
3. Allow the Examinee to ask questions about the JPM.
4. Begin the cueing sequence as described in the EXAMINER CUES section.

A certain amount of liberty (questioning or cueing beyond the bounds of the "EXAMINER CUES") may be taken by the Examiner in trying to extract the requisite information from the Examinee, however, care must be taken to ensure that you do not COACH the Examinee.

To complete this task successfully, the Examinee must complete each critical element (an element of the task which, if omitted or performed incorrectly, would result in a failure to meet the "TASK STANDARD") correctly.

For In-Plant JPMs additional safety gear may be required. The Examinee should inform the Examiner that additional gear is required. The Examiner will then specify if the additional safety gear is to be donned, or to be simulated after the Examinee specifies what equipment is required and where it would be located.

Failure to use the proper safety equipment is immediate grounds for failure.

TASK STANDARDS: The core flood tanks are aligned for pressurization.

GPU Nuclear, Inc.
Middletown, PA
Copyright 1996

This sheet is available for the examinee to review

EXAMINEE PREVIEW:

For this event you are assigned the duties of the Primary AO.
The instructor/examiner will act as the Console CRO and the SF.

When you are told to begin, you will respond to the cues or indications, which the Examiner will provide to you verbally.

Unless otherwise informed, you are to SIMULATE all actions taken.

You are expected to maintain proper communications with the Control Room as you would in the plant for a real condition.

It is very important that you describe to the instructor/examiner the physical details of the actions that you would be taking if you were actually performing the manipulations required to complete this task. Failure to adequately describe your actions could result in a failure to meet the task standard.

You are to respond as you would in the plant for a real condition.

You are expected to wear all required safety gear in accordance with plant procedures and policies. If during a simulated task additional safety gear is required you should notify the Examiner.

Failure to use the proper safety equipment is immediate grounds for failure.

TASK CONDITIONS:

The plant is at 100% power.
The "A" core flood tank pressure is low.
CF-V-19A has been opened from the control room to pressurize the "A" Core Flood tank.

GPU Nuclear, Inc.
Middletown, PA
Copyright 1996

EXAMINER CUES	EXAMINEE ACTIONS	STANDARD
As the SF, instruct the Examinee to align the Core Flood Tanks for pressurization. Examiner provides the Examinee with a copy of OP 1104-1 and OP 1104-26. Examiner informs the Examinee the N_2 is aligned from the high pressure Nitrogen banks, NI-T-1A/B to the 650 psig header.	1. Examinee simulates logging the CF N_2 addition in the primary log.	1. Log entry simulated at primary A.O. center 305 Aux. Bldg IAW AP 1012.
	*2. Examinee opens CF-V-10 by rotating the handwheel in the counter clockwise direction.	2. CF-V-10 is open. _____ SAT.
ROLEPLAY: If the Examinee fails to report to the NI-V-25 location, Examinee CANNOT complete this task. POSITIVE CUE: Inform Examinee that NI-V-25 is aligned per their instruction.	*3. Examinee proceeds to the Auxiliary Building 305' elevation across from 1A ESV MCC and opens NI-V-25 by rotating the handwheel in the counter clockwise direction.	3. NI-V-25 is open. _____ SAT.
ROLEPLAY: If the examinee contacts the Control Room tell the examinee that you are monitoring level and pressure.	4. The Examinee contacts the control room to monitor Core Flood Tank level and pressure.	4. Examinee contacts the control room.
ROLEPLAY: If the examinee contacts the Control Room tell the examinee that you have opened CF-V-19A. (Was listed as open in initial conditions.)	5. The Examinee contacts the Control Room to open CF-V-19A.	5. Control Room contacted to open CF-V-19A.
ROLEPLAY: If the examinee contacts the Control Room or outbuildings tell the examinee that NI-V-137 is open. N_2 was listed as lined up the 650# header in step 1.	6. The Examinee contacts the Control Room or outbuildings to line up the High Pressure bottle banks.	6. High pressure banks inservice.

GPU Nuclear, Inc.
Middletown, PA
Copyright 1996

EXAMINER CUES	EXAMINEE ACTIONS	STANDARD
	*7. Examinee proceeds to the Chem. Addition room and Verifies open NI-V-138 by rotating the handwheel in the counter clockwise direction.	7. NI-V-138 is open. _____ SAT.
	*8. Examinee slowly opens NI-V-139 by rotating the handwheel in the counter clockwise direction.	8. NI-V-139 is open. _____ SAT.
	*9. Examinee slowly opens NI-V-141 by rotating the handwheel in the counter clockwise direction.	9. NI-V-141 is open. _____ SAT.
	*10. Examinee opens NI-V-98A by rotating the handwheel in the counter clockwise direction.	10. NI-V-98A is open. _____ SAT.
	11. Examinee opens NI-V-98B by rotating the handwheel in the counter clockwise direction.	11. NI-V-98B is open.
NOTE: Critical only if the B regulator is to be used.	*12. Examinee slowly opens NI-V-99 by rotating the handwheel in the counter clockwise direction.	12. NI-V-99 is open. _____ SAT.
	*13. Examinee opens the 650 psig inlet valve (NI-V-81A or B) for the regulator by rotating the handwheel in the counter clockwise direction.	13. NI-V-81A or B is open and Lo side 650 # N_2 regulator gauge indicates ≥ 650# _____ SAT.

POSITIVE CUE:
If Examinee performs critical steps 6-12 correctly inform them that N_2 pressure is at least 650#.

NEGATIVE CUE:
Examinee does NOT perform ps 6-12 correctly, inform them that N_2 pressure is not reading > 650#.

GPU Nuclear, Inc.
Middletown, PA
Copyright 1996

EXAMINER CUES	EXAMINEE ACTIONS	STANDARD
NOTE: To use NI-V-79B, NI-V-99 must have been opened above and the B regulator placed inservice.	*14. Examinee slowly opens the 650 psig outlet valve (NI-V-79A & 1011) or 79B for the regulator by rotating the handwheel in the counter clockwise direction.	14. NI-V-79A & 1011 or NI-V-79B is open and Lo side 650 # N_2 regulator gauge indicates ≥ 650# _____ SAT.
	15. Examinee contacts the control room to inform them N2 is lined up to the "A" Core Flood tank.	15. Control room contacted

POSITIVE CUE:
If Examinee performs the critical steps above correctly, inform them that N_2 pressure is rising on CF-T-1A.

NEGATIVE CUE:
If Examinee does not properly perform critical steps properly, inform them that you see no rise in pressure on the "A" Core Flood tank.

JPM may be terminated at this time.

(*)Denotes Critical Element.

EVALUATION: SAT:_____ UNSAT:_____

GPU Nuclear, Inc.
Middletown, PA
Copyright 1996

JPM CHANGE HISTORY PAGE

REVISION	DATE	REFERENCE TITLE	DESCRIPTION (Include AI # if Appropriate)
0	4/11/96		Upgraded AO JPM to LOR standards and incorporated into LOR bank. Deleted existing AO JPM. Previous AO JPM #11.2.07.036
1	12/20/99		Formatted examinee page as preview page. Upgraded to Word97. Deleted Grading sheet. Made editorial changes. Significant rewrite because of the NI mod that installed NI banks and liquid tank added logging requirement as step 1.

GPU Nuclear, Inc.
Middletown, PA
Copyright 1996

TMI-1 OPERATOR TRAINING REQUALIFICATION PROGRAM

JOB PERFORMANCE MEASURE

POSITION: SRO/RO/AO

TITLE: Respond to a Loss of "A" DC Distribution System

TASK NUMBER: 0000580504

EVALUATION METHOD: PERFORM:_____ SIMULATE:___X___

EVALUATION LOCATION: SIMULATOR:_____ IN-PLANT:___X___ CONTROL ROOM:_____

APPROXIMATE COMPLETION TIME: 12 Minutes

IMPORTANCE RATING (TIF): TMI=4.34 NRC=4.0 AK3.02

TOOLS AND EQUIPMENT: None

EXAMINEE REFERENCES: EP 1202-9A, Loss of "A" DC Distribution System

10CFR55.45: (a)(6), (8)

	Signature	Date
Submitted By:		12-15-99
Validated By:		12/15/99
Reviewed By: Lead Inst., Ops. Training or Lead Inst., Sim. Training		12/15/99
Operations Training Manager		12/16/99
Approved By: Plant Operations Director		12/17/99

SIMULATOR CONDITIONS: NA

EXAMINER PREVIEW:

This JPM deals with responding to a loss of the "A" DC distribution system - specifically two in-plant immediate manual actions: securing EG-Y-1A, and transferring the Alterrex Excitation System DC power supply to B-DC.

NOTE: If this JPM is commenced from the Control Room or nearby, it may be started at Step 6 due to the necessity of obtaining a key and the geographical locations of each task. It is NOT critical to secure EG-Y-1A prior to transferring exciter control power.

The sequence of events which should be followed in the conduct of this JPM is as follows:

1. Read or otherwise inform the Examinee of the information contained in the "EXAMINEE PREVIEW" section of this JPM.
2. Inform the Examinee of the TASK CONDITIONS.
3. Allow the Examinee to ask questions about the JPM.
4. Begin the cueing sequence as described in the EXAMINER CUES section.

A certain amount of liberty (questioning or cueing beyond the bounds of the "EXAMINER CUES") may be taken by the Examiner in trying to extract the requisite information from the Examinee, however, care must be taken to ensure that you do not COACH the Examinee.

To complete this task successfully, the Examinee must complete each critical element (an element of the task which, if omitted or performed incorrectly, would result in a failure to meet the "TASK STANDARD") correctly.

TASK STANDARDS: EG-V-15A is closed, EG-Y-1A fuel rack is tripped, and the Alterrex Excitation System DC power supply is transferred to "B" side DC power.

This sheet is available for the examinee to review

EXAMINEE PREVIEW:

For this event you are assigned the duties of the Extra CRO or Secondary AO.

The instructor/examiner will act as the Console CRO and the SF.

When you are told to begin, you will respond to the cues or indications that the examiner will provide to you verbally.

Unless otherwise informed, you are to SIMULATE all actions taken.

You are expected to maintain proper communications with the Control Room as you would in the plant for the real condition.

It is very important that you describe to the instructor/examiner the physical details of the actions that you would be taking if you were actually performing the manipulations required to complete this task. Failure to adequately describe your actions could result in a failure to meet the task standard.

You are to respond as you would in the plant for a real condition.

You are expected to wear all required safety gear in accordance with plant procedures and policies. If during a simulated task additional safety gear is required you should notify the Examiner.

Failure to use the proper safety equipment is immediate grounds for failure.

TASK CONDITIONS:

Plant is at 100% power, steady-state.

A loss of the "A" DC distribution system has occurred.

1202-9A immediate manual actions are in progress.

Your task will be to perform the 1202-9A immediate manual actions associated with securing EG-Y-1A and swapping main generator exciter control power.

EXAMINER CUES	EXAMINEE ACTIONS	STANDARD
EXAMINER-ROLE PLAY: As the Shift Foreman, direct examinee to respond to EG-Y-1A and perform the following: 1) close EG-V-15A, 2) verify starting air pressure on EMIP decreases to 0 psig, and 3) trip EG-Y-1A fuel rack.	1. Examinee responds to EG-Y-1A (red diesel) located in the Diesel Generator Building, northwest room, and locates EG-V-15A on the north side of engine, to the outside of and below the inspection skid.	1. Examinee at EG-Y-1A and EG-V-15A located by examinee.
POSITIVE CUE: If step 2 is performed correctly, inform examinee that EG-V-15A is closed and the starting air receivers are repressurizing. **NEGATIVE CUE:** If step 2 is not performed correctly, inform examinee that starting air receivers are not yet repressurizing.	*2. Examinee closes valve labeled EG-V-15A by turning its valve handle 90°, so the handle is perpendicular to the pipe.	2. EG-V-15A is closed as indicated by its valve handle being perpendicular to the pipe, and starting air receivers repressurizing. _____ SAT
POSITIVE CUE: If examinee performed step 2 correctly (EG-V-15A is closed) and locates EG-PI-535A/B, inform examinee that "Starting Air Pressure" gauges read 0 psig. **NEGATIVE CUE:** If step 2 was not performed correctly, inform examinee that "Starting Air Pressure" on EG-PI-535A/B is NOT decreasing.	3. Examinee checks "Starting Air Pressure" gauges, EG-PI-535A/B, mounted on EMIP, and verifies they decrease to zero (0) psig.	3. "Starting Air Pressure" gauges, EG-PI-535A/B, mounted on EMIP, decrease to zero (0) psig.
POSITIVE CUE: If examinee correctly performs step 4, inform examinee that the noise level from the Diesel and its speed are decreasing.	*4. Examinee trips EG-Y-1A fuel racks by depressing the "FUEL RACKS TRIP" knob located on the southwest corner of the engine.	4. EG-Y-1A fuel racks tripped as indicated by EG-Y-1A speed decreasing to zero (0). _____ SAT
NEGATIVE CUE: If step 4 was not performed correctly, inform examinee that diesel noise level and speed have not changed.	5. Examinee informs control room that EG-Y-1A tasks are complete - the diesel is shutdown.	5. Control room informed that EG-Y-1A is tripped.

EXAMINER CUES	EXAMINEE ACTIONS	STANDARD
EXAMINER-ROLE PLAY: As the SF, direct examinee to obtain Key #22, respond to the Alterrex Cabinet for the Main Generator, and transfer Excitation Control to "B" side DC power.	6. Examinee proceeds with Key #22 to the Alterrex Cabinet located in the BOP switchgear room at the south end of the 2nd floor of the Turbine Building, just north and across from the east end of 1C 4KV BOP Bus.	6. Examinee reports to the BOP switchgear room, and locates the Alterrex cabinet.
POSITIVE CUE: If steps 6 & 7 are performed correctly, inform examinee that the Alterrex Cabinet door is open. **NEGATIVE CUE:** If steps 6 & 7 are NOT performed correctly, inform examinee that Alterrex Cabinet door is NOT open.	7. Examinee opens the Alterrex Excitation cabinet using Key #22.	7. Alterrex Excitation cabinet door is open.
POSITIVE CUE: If step 8 is performed correctly, inform examinee that the Alterrex power supply switch is in the "B" DC position. **NEGATIVE CUE:** Inform the Examinee that the Alterrex power supply switch is still in the "A" DC position.	*8. Examinee transfers the Alterrex Excitation system DC power supply to "B" side DC Power by rotating the 43 SS clockwise.	8. Alterrex power on "B" side DC as indicated by 43SS pointing to "B 125VDC". _____ SAT
	9. Examinee informs control room that Excitation Control power has been transferred to B-DC supply.	9. Examinee calls the Control Room and informs the Control Room personnel of their actions.

JPM may be terminated when examinee reports both tasks completed.

(*) Denotes Critical Element.

EVALUATION: SAT:_____ UNSAT:_____

JPM CHANGE HISTORY PAGE

REVISION	DATE	REFERENCE TITLE	DESCRIPTION (Include AI # if Appropriate)
1	10/31/89	NA	Modified step #2 to non-sequence critical, deleted step #3.
2	10/02/90	NA	Added steps to include tripping open of Main Generator Field Breaker, deleted follow-up questions.
3	01/17/91	NA	Modified Examiner Cues sections to include positive and negative cues.
4	12/26/95	PCR for EP 1202-9A	AI 95-286, Modified JPM to delete performance of tripping Main Generator Field Breaker and added transfer of Alterrex Excitation power due to plant modification.
5	07/23/96	NRC 71001 Inspection	AI 96-117, Upgraded JPM by removing step #2 critical task, comment from Lopez during NRC 71001 inspection. Added cue to step #7 for starting air pressure due to procedure change.
6	12/15/99		Updated format & converted to WORD97. Improved JPM editorially throughout. Swapped order of tasks to match priority in 1202-9A; i.e. diesel tripped then exciter power supply swapped. No technical changes.

TMI-1 OPERATOR TRAINING REQUALIFICATION PROGRAM

JOB PERFORMANCE MEASURE – ALTERNATE PATH

POSITION: SRO/RO/AO

TITLE:	Manually Actuate the Relay Room CO_2 System
TASK NUMBER:	086A090104
EVALUATION METHOD:	PERFORM:_____ SIMULATE:___X___
EVALUATION LOCATION:	SIMULATOR:_____ IN-PLANT:___X___ CONTROL ROOM:_____
APPROXIMATE COMPLETION TIME:	5 Minutes
IMPORTANCE RATING (TIF):	TMI=3.73 NRC=3.0 K4.06
TOOLS AND EQUIPMENT:	None
EXAMINEE REFERENCES:	None
10CFR55.45:	(a)(3), (12).

	SIGNATURE	DATE
Submitted By:		10-5-99
Validated By:		12/15/99
Reviewed by: Lead Instructor, Operator Training OR Lead Instructor, Simulator Training		12/16/99
Operations Training Manager		12/16/99
Approved By: Plant Operations Director		12/17/99

SIMULATOR CONDITIONS: N/A

EXAMINER PREVIEW:

This JPM requires the examinee to manually actuate the relay room cardox (CO_2) system due to a fire in the relay room without automatic CO_2 system actuation. This JPM is considered alternate path because the normal method of manual actuation will not function, requiring the alternate method of manual actuation per 1104-45F.

The Examinee Preview should be conducted in the Control Room.

The sequence of events which should be followed in the conduct of this JPM is as follows:

1. Read or otherwise inform the Examinee of the information contained in the "EXAMINEE PREVIEW" section of this JPM.
2. Inform the Examinee of the TASK CONDITIONS.
3. Allow the Examinee to ask questions about the JPM. (In-Plant)
4. Begin the cueing sequence as described in the EXAMINER CUES section.

A certain amount of liberty (questioning or cueing beyond the bounds of the "EXAMINER CUES") may be taken by the Examiner in trying to extract the requisite information from the Examinee, however, care must be taken to ensure that you do not COACH the Examinee.

To complete this task successfully, the Examinee must complete each critical element (an element of the task which, if omitted or performed incorrectly, would result in a failure to meet the "TASK STANDARD") correctly.

For In-Plant JPMs additional safety gear may be required. The Examinee should inform the Examiner that additional gear is required. The Examiner will then specify if the additional safety gear is to be donned, or to be simulated after the Examinee specifies what equipment is required and where it would be located.

Failure to use the proper safety equipment is immediate grounds for failure.

TASK STANDARDS: CO_2 discharged into Relay Room for at least 3 minutes using manual pilot valve outside relay room patio entrance.

This sheet is available for the examinee to review

EXAMINEE PREVIEW:
(to be conducted in Control room)

For this event you are assigned the duties of an AO/CRO/SRO.

The instructor/examiner will act as the Shift Foreman or Supervisor.

When you are told to begin, you will respond to the cues or indications that the examiner will provide to you verbally.

Unless otherwise informed, you are to SIMULATE all actions taken.

You are expected to maintain proper communications with the Control Room as you would in the plant for a real condition.

It is very important that you describe to the instructor/examiner the physical details of the actions that you would be taking if you were actually performing the manipulations required to complete this task. Failure to adequately describe your actions could result in a failure to meet the task standard.

You are to respond as you would in the plant for a real condition.

You are expected to wear all required safety gear in accordance with plant procedures and policies. If during a simulated task additional safety gear is required you should notify the Examiner.

Failure to use the proper safety equipment is immediate grounds for failure.

TASK CONDITIONS:

The reactor has been manually tripped due to a fire in the Relay Room. The Control Room is being evacuated for the same reason.

Indications are that the Relay Room CO_2 system did not automatically actuate as designed.

EXAMINER CUES	EXAMINEE ACTIONS	STANDARD
As the Shift Foreman, direct the Examinee to manually actuate the Relay Room CO_2 System using the pushbutton station in ESAS cabinet room. NEGATIVE CUE: Inform the Examinee that "nothing has happened" – "there is no evidence that the CO_2 system has actuated."	1. Examinee proceeds to the 3rd floor of the control tower, ESAS cabinet room, and manually actuates the Relay Room CO_2 System by opening the hinged cover and depressing the pushbutton.	1. Examinee simulates actuating the Relay Room CO_2 system by opening the hinged cover and depressing the pushbutton on the manual actuation station in ESAS cabinet room.
	*2. Examinee proceeds to the Control Tower Patio at the east wall across from the CRDM Inductrol units, to the alternate CO_2 Pilot Control Cabinet.	2. Examinee locates the alternate Relay Room CO_2 System Pilot Control Cabinet outside relay room entrance from patio. _____ SAT
POSITIVE CUE: If the Examinee describes this action correctly, inform the Examinee that a rushing noise can be heard in the Relay Room and a slight Wintergreen odor can be detected. NEGATIVE CUE: If the Examinee does not describe this action correctly or in sufficient detail, inform Examinee that "nothing has happened".	*3. Examinee breaks the glass, and rotates the chrome handle ½ turn up in the counter-clockwise direction to the open position for 3 minutes.	3. Glass on Relay Room CO_2 System Pilot Control Cabinet is broken. _____ SAT Chrome handle is rotated ½ turn up in the counter-clockwise direction and position maintained for at least three (3) minutes. _____ SAT
POSITIVE CUE: If reclosure of pilot valve is described correctly, inform Examinee that CO_2 flow noise has stopped.	4. Examinee returns chrome handle in Relay Room CO_2 System Pilot Control Cabinet to its original closed position after 3 minutes.	4. Chrome handle in Relay Room CO_2 System Pilot Control Cabinet is returned to its original closed position after 3 minutes.

(*) Denotes Critical Element.

EVALUATION: SAT:_____ UNSAT:_____

JPM CHANGE HISTORY PAGE

REVISION	DATE	REFERENCE TITLE	DESCRIPTION (Include AI # if Appropriate)
3	01/08/99	N/A	Specified standard on 2nd method of initiating CO_2. Modified preview page, deleted grading sheet, converted to Word97.
4	10/05/99		Converted to alternate path JPM: normal (electrical) manual actuation station will not function – must use pilot valve.

UNITED STATES
NUCLEAR REGULATORY COMMISSION
REGION I
475 ALLENDALE ROAD
KING OF PRUSSIA, PENNSYLVANIA 19406-1415

March 3, 2000

Mr. Randy E. Hess
Director - Training
AmerGen Energy Company, LLC
Three Mile Island Nuclear Station
P. O. Box 480
Middletown, PA 17057

Dear Mr. Hess:

The purpose of this letter is to inform you of the individual examination results for your applicants on the initial examination conducted on February 10, 2000 and February 14-18, 2000, at your facility. This meets the intent of section E.1 of the Examiner Standards (ES 501) in NUREG 1021. Nine individuals were administered the examination, eight passed and one failed. This information is considered to be "proprietary" in accordance with 10 CFR 2.790 and it supplements the information contained in the related examination report for your facility which will be issued shortly.

Enclosure 1 is the completed ES-501-2, Power Plant Licensing Examination Results Summary, and is a summary of overall examination results.

Enclosure 2 contains the individual results ES-303-1 and 303-2, Operator License Examination Report, for the applicant. Contained therein are the deficiencies noted for each applicant. In accordance with your Systems Approach to Training (SAT) Program, we expect that you will review these results and provide appropriate remedial training for the individual independent of the overall pass status. The applicant has authorized the release of this information to your facility by signing Block 19A of NRC Form 398.

Enclosure 3 is a copy of the licenses and denial letter

Thank you for your cooperation in this matter. Please refer any questions you have to me at 610-337-5183.

Sincerely,

Richard J. Conte, Chief
Operational Safety Branch
Division of Reactor Safety

Docket No. 50-289

Mr. Randy E. Hess

Enclosures:
1. ES-501-2, Power Plant Licensing Examination Results Summary
2. ES-303-1 and 303-2, Individual Examination Results
3. Licenses and denial letter

cc w/o encls:

J. B. Cotton, Vice President
PUBLIC