PSEG

Public Service Electric and Gas Company P.O. Box 236 Hancocks Bridge, New Jersey 08038-0236

Nuclear Business Unit

OCT 1 5 1999

LR-N99418
LCR H98-10

United States Nuclear Regulatory Commission
Document Control Desk
Washington, DC 20555

RAI RESPONSE FOR
INCREASE OF ALLOWABLE MSIV LEAKAGE RATE AND DELETION OF MSIV SEALING SYSTEM TECHNICAL SPECIFICATION CHANGES
HOPE CREEK GENERATING STATION
FACILITY OPERATING LICENSE NPF-57
DOCKET NO. 50-354

Gentlemen:

This letter provides Public Service Electric & Gas Company's (PSE&G's) response to an NRC request for additional information (RAI) dated July 1, 1999. The RAI concerned a Hope Creek License Change Request (LCR H98-10), submitted on December 28, 1999, which proposed a revision to the Technical Specifications (TS) to permit an increase in the allowable leak rate for the main steam isolation valves (MSIVs) and to delete the MSIV sealing system.

Attachment 1 of this letter contains PSE&G's response to the RAI questions. Attachment 2 of this letter provides additional TS pages that have been marked-up to reflect the extent of the changes contained in LCR H98-10. These additional pages augment the marked-up pages originally sent with PSE&G's December 28, 1998, LCR submittal and do not introduce any new changes to the TS beyond the scope of the original mark-ups. PSE&G has concluded that the information contained in Attachments 1 and 2 do not alter the conclusions reached in the 10CFR50.92 No Significant Hazards analysis previously submitted with LCR H98-10.

On August 9, 1999, the NRR Hope Creek Project Manager was contacted and an October 15, 1999 due date for the RAI response was negotiated.

A001

Should you have any questions regarding this request, please contact Mr. James Priest at 856-339-5434.

Sincerely,

M. B. Bezilla
Vice President - Operations

Affidavit
Attachments (2)

JPP

C Mr. H. Miller, Administrator - Region I
U. S. Nuclear Regulatory Commission
475 Allendale Road
King of Prussia, PA 19406

Mr. R. Ennis, Licensing Project Manager - Hope Creek
U. S. Nuclear Regulatory Commission
One White Flint North
Mail Stop 8B1
11555 Rockville Pike
Rockville, MD 20852

USNRC Resident Inspector Office (X24)

Mr. K. Tosch, Manager IV
Bureau of Nuclear Engineering
P. O. Box 415
Trenton, NJ 08625

REF: LR-N99418
LCR H98-10

STATE OF NEW JERSEY)
) SS.
COUNTY OF SALEM)

M. B. Bezilla, being duly sworn according to law deposes and says:

I am Vice President - Operations of Public Service Electric and Gas Company, and as such, I find the matters set forth in the above referenced letter, concerning Hope Creek Generating Station, Unit 1, are true to the best of my knowledge, information and belief.

Subscribed and Sworn to before me
this 15th day of October, 1999

Jennifer M. Turner
Notary Public of New Jersey

JENNIFER M. TURNER
NOTARY PUBLIC OF NEW JERSEY
My Commission Expires July 25, 2000

My Commission expires on

RESPONSE TO RAI QUESTIONS:

NRC Question 1:

Provide a detailed description of the alternate leakage treatment (ALT) pathway and the basis for its functional reliability, commensurate with its intended safety-related function. Also, provide a description of the maintenance and testing program for the active components (such as valves) in the ALT pathway.

PSE&G Response:

Description of the Alternate Leakage Treatment (ALT) Pathway

Figure 1 of this attachment depicts the proposed ALT pathway configuration. The proposed configuration relies on the inherent main steam line isolation valve (MSIV) leakage treatment capability described in GE Nuclear Energy's report, "BWROG Report for Increasing MSIV Leakage Rate Limits and Elimination of Leakage Control Systems," NEDC-31858P, Revision 2. The technical justification for the proposed configuration utilizes a BWR industry-wide generic basis to support the proposed deletion of the MSIV Leakage Control System and replacement of that function with the alternate leakage treatment (ALT) path. The existing Hope Creek Leakage Control System is called the Main Steam Isolation Valve Sealing System (MSIVSS) and the proposed Alternate Leakage Treatment (ALT) Pathway will be called the MSIV Leakage Treatment Path (or the MSIV-LTP).

The MSIV-LTP will route the MSIV leakage (up to the limits proposed in the Technical Specification (TS) revisions) to the main condenser via the main steam line drains. The isolated main condenser will be used for MSIV leakage treatment. In the event of a design-basis LOCA with major fuel damage, the radioiodine fission products will plate out in the piping and main condenser, with time delay leakage into the turbine building through the turbine shaft seals. If a pressure transient occurs in the condenser of 5 psig, the leakage would be out of the condenser relief diaphragms (rupture discs).

The operating procedure for establishing the MSIV-LTP will close the Main Steam Stop Valves (MSSVs), open the 1ABHV-F072 to route leakage to the condenser, and provide verification that the other boundary valves are closed. The HPCI and RCIC drain pot valves will auto-close after an automatic initiation. The HPCI and RCIC would be isolated with the reactor at post-LOCA pressure. Emergency and/or abnormal

operating procedures will contain the instructions that define when the MSIV-LTP is to be established.

Figure 1 of this Attachment depicts the design boundaries of the MSIV leakage treatment pathway. The designated boundary (block) valves (e.g. the Main Steam Stop Valves (MSSVs)) will function to contain the MSIV leakage in the drain pathway. The boundary valves also identify the functional and design boundary of the MSIV leakage treatment pathway. All lines which interface with the designated drain pathway shown in Figure 1 will either: 1) be cut and capped; 2) contain boundary valves that will undergo inservice testing; or 3) lead back through Seismic Category I piping into containment (primary or secondary) and as such do not represent potential leakage pathways. The MSIV leakage treatment pathway valves and the associated boundary valves will be inservice tested as appropriate to ensure that the MSIV leakage treatment pathway can be established.

Basis for the Functional Reliability of the ALT Pathway

The MSIVSS currently uses Primary Containment Instrument Gas (PCIG) compressed air to pressurize the steam lines to limit MSIV leakage. The drywell atmosphere is automatically isolated after a LOCA and reactor building air is manually aligned to the PCIG compressor intakes. The PCIG Compressors are manually started to supply the MSIV Leakage Control System (KP) gas, which is routed between the 8 MSIVs (channel A) and between the 4 outboard MSIVs and the 4 MSSVs (channel B). The MSIVSS cannot be placed in service if containment pressure is greater than 25 psig or the total MSIVSS channel leakage exceeds 774 SCFM, since the MSIVSS could add significant gaseous inventory to the primary containment, exasperating the primary containment pressure rise and leakage of radiation out of containment following a LOCA.

The proposed MSIV-LTP modification deletes the MSIVSS and utilizes the reliable and effective main steam piping, the main steam line drain line, and condenser to perform MSIV leakage treatment. To establish the MSIV-LTP the MSSVs (1ABHV-F3631A, B, C, & D) are closed and 1ABHV-F072 is opened (see Figure 1). This leakage treatment method is effective in mitigating the effects of MSIV leakage over an expanded operating range (i.e., will be effective with containment pressure in excess of 25 psig) without exceeding the regulatory limits for off-site and control room dose. With the exception of the MSIV-LTP flowpath alignment from the MSIVs to the condenser, this treatment method is passive and does not require any logic control and interlocks. This method is consistent with the philosophy of protection by multiple leak-tight barriers used in containment design for limiting fission product release to the environment.

The following valves are in the MSIV-LTP drain path and are required to function (close or open), provide a flow path, or to maintain a boundary:

- Valve 1ABHV-F072, which is normally closed, is required to open to establish the MSIV-LTP. The valve is presently bypassed by a 1/8" orifice when AOV 1ABHV-FO69 is opened. Valve 1ABHV-FO69 will be modified to fail open upon a loss of instrument air or electrical power. This bypass flow path will therefore establish the MSIV-LTP whenever a single failure of 1ABHV-F072 to open occurs. In order to accommodate the postulated MSIV-LTP flow rates, the orifice size in the 1ABHV-FO69 valve line will be increased to 0.8".

- Valves 1ABHV-FO70A, B, C and D are normally closed, but are continuously bypassed during operation by a 1/8" orifice. The flow capacity of these bypass lines will be increased by the addition of a 0.6 " orifice and will allow the MSIV-LTP to be established without opening the 1ABHV-F070A, B, C and D valves.

- Valve 1ABHV-F071 is a normally open MOV with Class-1E power. This valve has no bypass and must be opened for establishing the MSIV-LTP. For this valve to cause an MSIV-LTP failure it would have to be mispositioned to "closed" and the valve or the 1E power source (Channel C) would have to fail.

- The boundary valves that need to close are 1ABHV-3631A, B, C, & D, 1ABHV-F020, 1ABHV-F019, 1FDHV-F029, 1FCHV-F026, and 1FDHV-4922. The piping to these boundary valves were evaluated in the seismic evaluation by EQE International, Inc. Failure of one or more of the MSSVs (1ABHV-3631A, B, C, & D) will still result in a passive leakage path to the main condenser through the main steam lead drains through 1ABFO-1051, which has a 0.3" orifice. Any leakage past the Class-1E powered MSSVs (1ABHV-3631A, B, C, & D) or leakage into the steam line before the Turbine Stop Valves (MSVs) would be leakage to the condenser through this path. This "Backup MSIV-LTP" will likely be available in a post-seismic event since the major piping is seismically designed and the small bore piping is extremely rugged. Failure of either the: 1) 1FDHV-F029 (the HPCI drain pot steam condensate drain to the condenser); 2) 1FCHV-F026 (the RCIC drain pot steam condensate drain to the condenser), or 3) 1FDHV-4922 (the HPCI Gland Seal Condenser Vacuum Pump discharge) will result in leakage back into secondary containment. If the lines are broken or open past the boundary valve, the discharge will be treated by the Filtration, Recirculation and Ventilation System (FRVS). If 1ABHV-F019 fails, the 1ABHV-F016 will isolate the MSIV-LTP boundary. 1ABHV-F019 is one of two safety-related primary containment isolation valves (in series with

the 1ABHV-F016) to the inboard MSIV before seat drain (inside primary containment). Failure of the valve 1ABHV-F020 will result in the aforementioned "Backup MSIV-LTP" treating any leakage past that boundary valve. However, 1ABHV- F020 is required to be closed in accordance with plant startup requirements in order to satisfy Station Blackout requirements. Since this valve is procedurally required and ensured to be in the closed position, its failure to close is not postulated and is excluded from the IST Program.

Maintenance and Testing Program the MLT Pathway

The valves required to establish the MSIV-LTP or to form the isolation boundary of the MSIV-LTP will have added requirements to assure their operability and ability to function. Many of these valves are already safety-related or are in the IST Program. The remaining valves (that are required to operate) will be added to the IST Program. The valves of concern are listed in Table 1 below. The proposed MSIV-LTP is composed of safety related and non-safety related piping. For the safety-related piping in the MSIV-LTP, PSE&G will continue to implement required inspections for that class of piping. The non-safety related pipe is part of the flow accelerated corrosion (FAC) program, and as such, it is periodically inspected & has been partially replaced with FAC resistant chrome-moly (A335 Grade P22) piping.

TABLE 1 - Boundary and MSIV-LTP Valves Requirement

Valve(s) With Operators	Action Needed for Initiating MSIV-LTP	Is the Valve in the "Q" Piping Boundary?	Remarks
ABHV-F072 MOV	Remote manually open this normally closed valve.	No, Non-ASME	No auto function. (ABHV-F069 is an air-operated valve that provides sufficient bypass if ABHV-FO72 fails to open). The MOV will be modified to have a Class-1E power source. Valve will be added to IST program, including tests for stroke time opening and position indication.
ABHV-F069 AOV	Remote manually open this normally closed AO valve.	No, Non-ASME	Valve design will change to fail open and orifice size will increase to permit sufficient flow to bypass a failed closed ABHV-F072. Valve will be added to the IST program.
ABHV-F070A, ABHV-F070B, ABHV-F070C, ABHV-F070D MOVs	None.	Yes, ASME Class 2	Orifice size in bypass lines will be increased to provide sufficient flow with the valves closed. Since valve opening is not required, they will not be added to the IST program .
ABHV-F071 MOV	Ensure this normally open valve is open	Yes	Valve is safety-related and Class-1E powered. No valve repositioning is required to establish the MSIV-LTP. IST program will require position indication tests.
ABHV-F3631A ABHV-F3631B ABHV-F3631C ABHV-F3631D MSSVs MOVs	Remote manually close these normally open valves	Yes, Q valve, 1E Power, & ASME Class 2	These are the Main Steam Stop Valves. They are manually closed before establishing the MSIV-LTP. IST program will be revised to retain only closure time tests and position indication.
ABHV-F019 MOV	Ensure this valve auto-closes.	Yes, Containment Isolation valve	This safety-related valve auto closes on a containment isolation.
ABHV-F020 MOV	Ensure this normally closed valve is closed	Yes, Non-Q but ASME Class 3	This valve is tagged closed during operation because of Station Black-out Requirements. No IST program testing required.
ABHV-F021 MOV	None	Yes, Non-Q but ASME Class 3	This valve is in series with ABHV-F019 & 20, which are boundary valves. No IST program testing is required.
ABHV-F033 AOV	None	Yes, Non-Q but ASME Class 3	This valve is in series with ABHV-F019 & 20, which are boundary valves. No IST program testing is required.

TABLE 1 - Boundary and MSIV-LTP Valves Requirement (Continued)

Valve(s) With Operators	Action Needed for Initiating MSIV-LTP	Is the Valve in the "Q" Piping Boundary?	Remarks
FDHV-F029 AOV	Monitor HPCI: If HPCI is isolated, verify valve is closed.	Yes	This is a fail closed HPCI drain, safety-related, controlled by HPCI. When MSIV-LTP is established, HPCI is not required (Post-LOCA).
FCHV-F026 AOV	Monitor RCIC: If RCIC is isolated, Verify valve is closed.	Yes	This is a fail closed RCIC drain, safety-related, controlled by RCIC. When MSIV-LTP is established, RCIC is not required (Post-LOCA).
FDHV-4922 MOV	Monitor HPCI: If HPCI is in service or isolated, ensure this normally closed valve is closed	No. Class-1E Powered, Non-Q valve & Non-Q Pressure Boundary	This is the HPCI gland seal condenser vacuum pump discharge to offgas via the main condenser. The valve is only opened for HPCI test runs. Auto closes on a HPCI initiation so flow is to RBVS/FRVS exhaust. Valve will be added to IST program.

NRC Question 2:

Clarify whether all pipe support anchorages in the ALT pathway have been seismically analyzed. If not, identify the pipe support anchorages that were not analyzed, and provide justification for the statement, made in Section 4.4 of Attachment 4 to Reference 1, that "all support anchorages have adequate capacities," without having all pipe support anchorages analyzed.

PSE&G Response:

All pipe support anchorage designs and loadings were reviewed. Bounding analyses were performed to verify the seismic adequacy of the anchorages of each of several types of pipe supports within the ALT pathway piping that are not classified as seismic Class I systems. Refer to Calculation no. 200965-C-002 (Enclosure 1) for details.

NRC Question 3:

Discuss whether the loading at the pipe support anchorages was generated from the seismic analysis of piping systems. If not, describe the method used.

PSE&G Response:

Pipe support loads used in the bounding support anchorage evaluations were obtained from the seismic analysis of the ALT pathway piping. Refer to Calculation nos. 200965-C-001 and 200965-C-002 (Enclosure 1) for details.

NRC Question 4:

Describe the method and criteria used to obtain the capacity of a pipe support anchorage.

PSE&G Response:

Support anchorages associated with the Hope Creek MSIV ALT pathway drain piping were evaluated on a deterministic basis following standard engineering practices, and were based on the support loads obtained from the analyses for the ALT pathway piping system. Anchorage allowable capacities are based on those presented in the SQUG Generic Implementation Procedure. AISC allowables are used to verify the capacities of the structural support members.

Further details on the method and criteria used to obtain the capacity of pipe support anchorages are described in Section 2.0 of Calculation no. 200965-C-002.

NRC Question 5:

In Section 4.4 of Attachment 4 to Reference 1, you stated that pipe supports for the non-seismically designed portion of the ALT pathway have been evaluated using the Conservative Deterministic Failure Margin (CDFM) methodology from EPRI Report NP-6041. This methodology has not been approved by the NRC, as discussed in Reference 2. Therefore, a plant-specific seismic evaluation for representative supports and anchorages associated with the non-seismically designed portion of the ALT pathway should be performed. The evaluation should be performed using the plant licensing basis methodology, or other methods acceptable to the staff. From this plant-specific evaluation, provide a comparison of the resulting support loads to their capacities and the associated safety margins.

PSE&G Response:

Support anchorages associated with the non-seismic Class I portions of the ALT pathway piping were evaluated on a deterministic basis. The piping systems and supports were subjected to the seismic response spectrum of the Turbine Building and the pipe support loads were determined. The most critical supports were then evaluated. Demand/Capacity ratios (D/C) for the bounding support configuration

anchorage analyses are all acceptable, the largest being 0.74. Table I of Calculation 200965-C-002 illustrates the analysis process and results.

NRC Question 6:

In relation to item (5) above, provide calculations for a typical pipe support anchorage that serve to illustrate the process of demonstrating the seismic adequacy of the support anchorage.

PSE&G Response:

Refer to Calculation no. 200965-C-002 for the support anchorage evaluation process, methodology, criteria and results.

NRC Question 7:

Provide a bounding seismic analysis for the ALT pathway, subject to all the pertinent design loading. Discuss the basis for the selection of the analyzed portion of the drain line piping for the bounding analysis.

PSE&G Response:

A bounding seismic analysis of the ALT pathway piping was performed using a general-purpose finite element piping analysis program. The analysis considered pertinent loadings and criteria. Calculation no. 200965-C-001 provides additional details of the bounding seismic analysis of the ALT pathway piping including selection of the system configuration analyzed.

NRC Question 8:

Provide your approved plant walkdown verification procedure for Hope Creek's ALT pathway.

PSE&G Response:

The Hope Creek plant walkdown verification procedure reviewed various design attributes of the as-installed scope of equipment, piping and tubing to ensure that the installations are representative of database design practice and that components are free of known seismic vulnerabilities. The procedure was based on earthquake experience and the identified conditions that have resulted in failure of piping and tubing systems and components. The conditions evaluated in the walkdown review included:

- Piping, Pipe Support and Equipment Design Attributes

- Seismic Anchor Movement Issues
- Seismic Interaction Issues (II/I & Proximity)
- Valve Design Attributes

The above design attributes and conditions are briefly discussed below.

Piping, Pipe Support and Equipment Design Attributes

The Seismic Walkdown Team reviewed the piping and tubing systems, and associated supports for design attributes and conditions that are inconsistent with good design practice and that may contribute to poor seismic performance. These included:

- Piping with dead weight support spacing greatly in excess of the B31.1 suggested spans, or tubing with excessive sagging.
- Heavy, unsupported in-line components.
- Piping constructed of non-ductile materials such as cast iron or PVC.
- Non-standard fittings or unusual attachments that could cause excessive localized stresses.
- Pipe supports that exhibit non-ductile behavior.
- Presence of severe corrosion.

In addition, anchorage of terminal equipment to piping and tubing systems were reviewed for adequacy.

Seismic Anchor Movement Issues

The earthquake experience database includes instances of seismic damage to piping, tubing and supports that were attributed to seismic anchor movement. Damage was the result of excessive movement of terminal end equipment, differential movement between supports in adjacent buildings, and excessive movements imposed on branch lines by flexible headers. Piping systems were evaluated during the walkdowns for these attributes.

Seismic Interaction Issues (II/I and Proximity)

Visual inspections of structures, piping, or equipment adjacent to the components under evaluation were performed for seismic interactions. The seismic interaction review identified potential seismically induced failures (II/I) and displacements of adjacent

structures, piping, or equipment (proximity) that could adversely affect the required seismic performance of the system and components under consideration.

Valve Design Attributes

Seismic screening of valves that are either relied upon to establish, or are within the Seismic Verification Boundary were performed. The guidelines are consistent with the SQUG Generic Implementation Procedure (GIP, Reference 5) and include provisions for air-operated diaphragm valves, spring-operated pressure relief valves, piston-operated valves of light-weight construction, motor-operated valves, and substantial piston-operated valves.

NRC Question 9:

On page 3-1 of Attachment 4 to Reference I the high-pressure condenser at Hope Creek is compared to similar condensers at Moss Landing Units 6 & 7 and Ormond Beach Units I & 2. The first sentence of the third paragraph on page 3-1 of Attachment 4 states, "In summary, the condenser design and anchorage are similar to those at facilities in the earthquake experience database that have experienced earthquakes in excess of the Hope Creek design-basis Safe Shutdown Earthquake (SSE) (See Figure 4-1)." The Moss Landing response Spectrum shown on Figure 4-1 of Attachment 4 is not the same as the spectrum that has been previously accepted by the staff. The response spectrum for Moss Landing, estimated from ground motion from the 1989 M6.9 Loma Prieta earthquake, that has been accepted by the staff was developed by Pacific Gas & Electric (PG&E). Furthermore, the Ormond Beach Power Plant response spectrum, used because the condenser at Ormond Beach Power Plant is similar to the Hope Creek condenser, is not plotted on Figure 4-1. Provide a separate plot of each of the database response spectra and the Hope Creek SSE design spectrum including plots of the Ormond Beach Power Plant response spectrum and the correct Moss Landing response spectrum.

PSE&G Response:

The Hope Greek turbine condenser design attributes are shown to fall within the bounds of the Moss Landing and Ormond Beach Power Plant design characteristics from the earthquake experience database (Reference 1). Individual comparison plots of the database site response spectrum with the Hope Creek SSE design ground spectrum are provided in Enclosure 2, including the NRC reviewed and accepted Moss Landing site spectra. Ormond Beach spectra were not used in the comparisons with the Hope Creek condenser for anchorage adequacy.

With respect to Appendix A of 10CFR Part 100, the Hope Creek condenser has been demonstrated to have adequate seismic anchorage in Section of 3.2 of Reference 1.

NRC Question 10:

On page 4-4 of Attachment 4 to Reference 1, the first paragraph of the section entitled 'Comparison of Hope Creek Design SSE Spectra with the Earthquake Database Plants' states, "The Hope Creek design basis SSE ground response spectrum was compared with the ground motion spectra at several database power plant sites in the attached Figure 4-1. From a review of Figure 4-1, the database spectra is seen to significantly envelop the Hope Creek spectrum over the entire frequency range of interest." Provide the frequency range of interest referred to above since the Valley Steam, NRC approved Moss Landing, and the Ormond Beach spectra do not envelope the Hope Creek SSE design spectrum over all frequencies.

PSE&G Response:

The individual comparison plots of the 5% damped ground spectra of the database facilities with the Hope Creek SSE ground spectrum are shown in the attached figures (Enclosure 2). The frequencies of interest for piping systems are in the low frequency portion of the spectra and for equipment in the high to rigid range. Many of the earthquake experience database sites have experienced strong ground motions that are in excess of the Hope Creek SSE over the entire frequency range of interest. Some earthquake spectra such as Moss Landing and Valley Stream power plants bound the Hope Creek design SSE spectra in the low and high frequencies of interest. Ormond Beach spectra were not used in the comparisons with the Hope Creek piping or condenser anchorage.

With respect to Appendix A of 10CFR Part 100, a bounding analysis of the ALT pathway has been performed (see Calculation no. 200965-C-001), for seismic and sustained loadings, in addition to the earthquake experience database comparisons. This analysis shows that the piping and supports meet appropriate stress and capacity limits.

NRC Question 11:

Figure 4-1 of Attachment 4 to Reference 1 shows zero period acceleration (ZPA) values for four facility experience database ground motions. It is the staff's position that although peak ground acceleration has been used in the past to characterize earthquake strong ground motion; this single parameter does not have a good correlation with earthquake damage. A much better correlation of ground motion damage potential is the ground response spectrum, which demonstrates the maximum amplitude of the ground motion as a function of the natural frequency. It is the NRC's position that the appropriate characterization of the ground motion at a facility, to be used to verify the adequacy of equipment similar to that in nuclear power plants, is the response spectra developed from ground motion recorded at or near a facility. The staff has accepted the Humboldt Bay response spectra from the 1975 Ferndale earthquake and the 1992 Petrolia earthquake as well as the Glendale response

spectrum from the 1971 San Fernando earthquake as part of the earthquake database ground motion (Reference 2). If equipment from the Humboldt Bay Nuclear Power Plant or Glendale Power Plant is used to qualify equipment at Hope Creek, then provide a separate plot showing the Hope Creek SSE design spectrum and the entire 1975 and 1992 Humboldt Bay response spectra and the entire Glendale response spectrum.

PSE&G Response:

Comparisons of earthquake experience data from the Humboldt Bay and the Glendale Power Plants with Hope Creek plant equipment have not been utilized to establish their performance

NRC Question 12:

In Table 1, "Dose Comparisons," of Attachment 1 to Reference 1, you have provided control room operator doses for a postulated design-basis accident for 30 days. Provide the unfiltered control room air infiltration rate assumed in the control room operator dose calculations and its bases. State if you have performed any unfiltered air inleakage tests.

PSE&G Response:

The unfiltered control room infiltration rate assumed in the control room operator dose calculations is 10 cfm, which reflects the criteria contained in the Standard Review Plan, Section 6.4, "Control Room Habitability." Furthermore, 200 cfm is assumed to be drawn into the control room emergency filtration system upstream of the fans and increase the effective makeup flow rate by 200 cfm above the maximum flow rate of 1000 cfm specified in Hope Creek Technical Specification Surveillance Requirement 4.7.2. Additionally, the re-circulation flow rate is assumed to be a minimum rate of 2400 cfm rather than a nominal rate of 3000 cfm. PSE&G has not performed any control room unfiltered air in-leakage tests. Nevertheless, PSE&G is confident that the control room airflow model is conservative. In its pressurization mode, the control room is maintained at a positive pressure with respect to adjacent areas. No ductwork except that associated with control room supply and exhaust is routed through the control room envelope. Furthermore, "bubble-type" dampers are provided. Therefore, PSE&G concludes that, although the control room may be vulnerable to some filtered infiltration, it is not susceptible to significant unfiltered infiltration.

References

1. Letter from E.C. Simpson (PSE&G) to Document Control Desk (NRC) "Request for Change to Technical Specifications, Increase of Allowable Main Steam Line Isolation Valve (MSIV) Leak Rate and Deletion of MSIV Sealing System, Attachment 4," dated December 28, 1998.

2. Letter from F.M. Akstulewicz (NRC) to T.A. Green (BWROG), "Safety Evaluation of GE Topical Report, NEDC-31858P, Revision 2, 'BWROG Report for increasing MSIV Leakage Limits and Elimination of Leakage Control Systems,' September 1993," dated March 3, 1999.

3. R.B. Ennis (NRC) to H.W. Keiser (PSE&G), NRC Letter – Request for Additional Information (TAC No. MA4471), July 1, 1999.

4. PSBP 324390 – EQE Calculation No. 200965-C-002, September 15, 1999.

5. PSBP 324391 – EQE Calculation No. 200965-C-001, September 15, 1999.

Figure 1

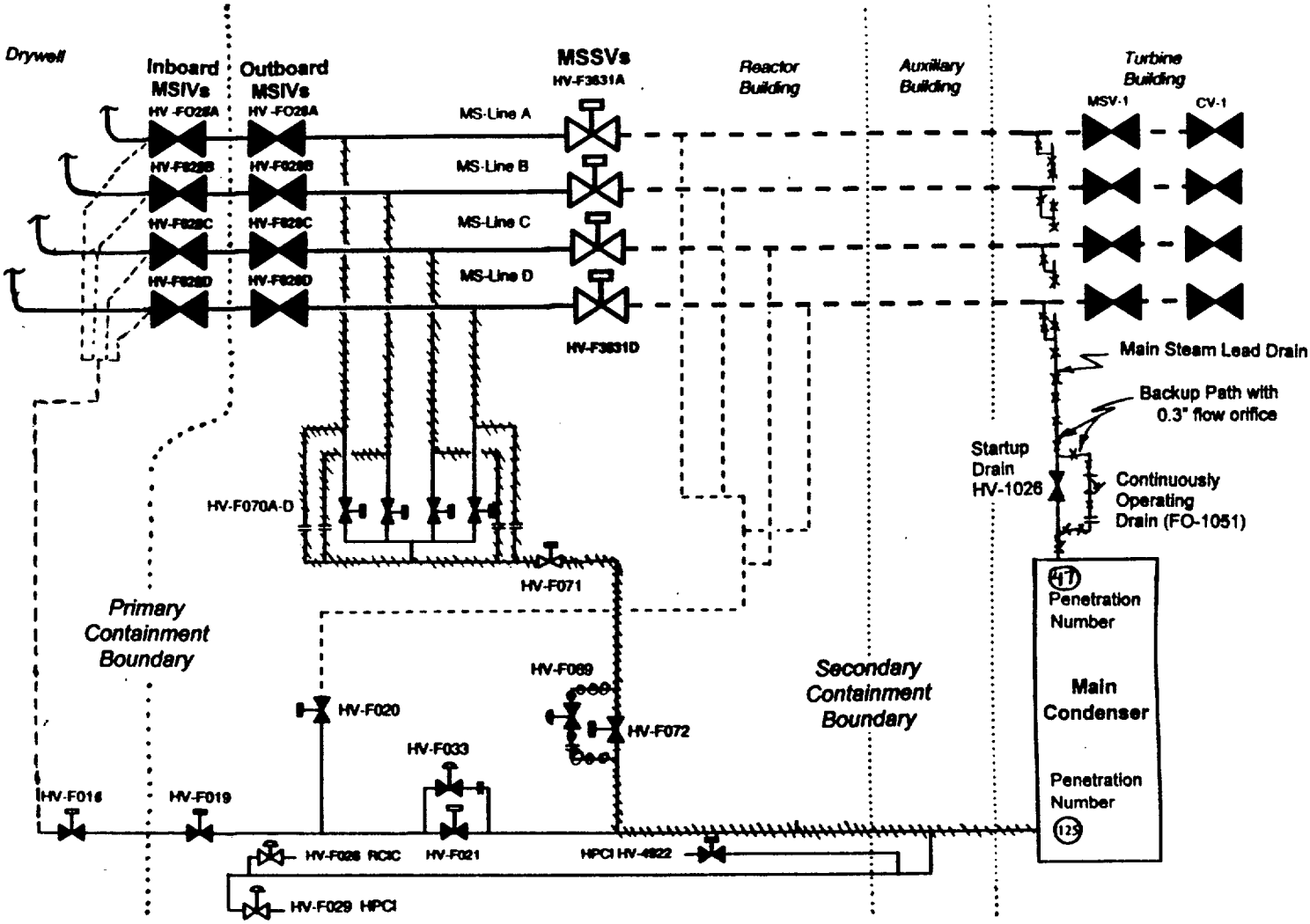

Figure 1 Main Steam Isolation Valve--Leakage Treatment Path (MSIV-LTP)

Enclosure 1

Calculations 200965-C-001 and 200965-C-002

Table 1
Pipe Stress Summary

Node No.	Load Combination	Total Stress (ksi)	Stress Ratio
46	P1	7.85	0.52
235	GR + P1	5.72	0.38
150	T1	20.07	0.89
65	GR + P1 + U1	6.50	0.36
11	GR + P1 + R_{SSE}	29.36	0.82

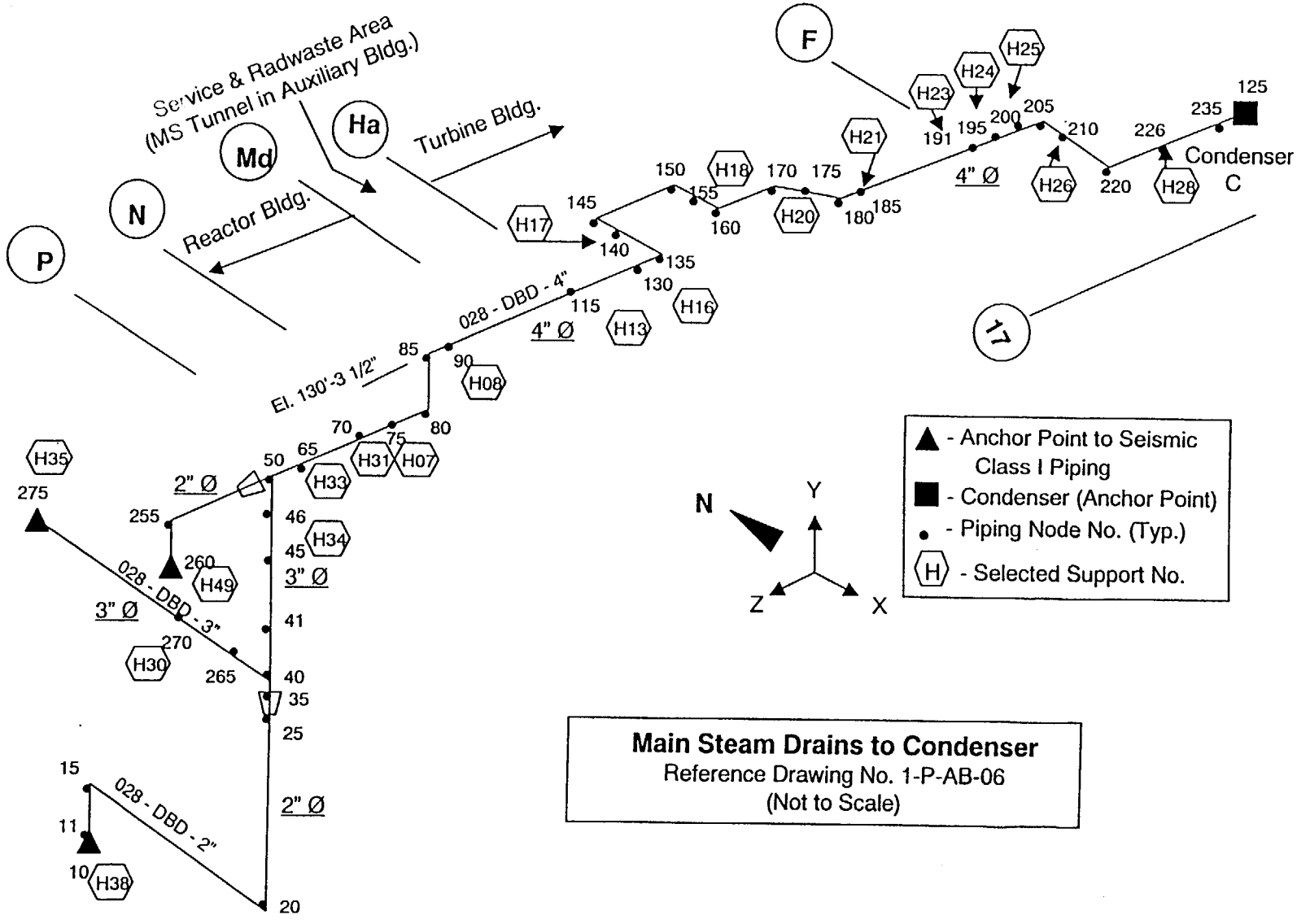

Figure 1- Mathematical Model of the Main Steam Drains to the Condenser

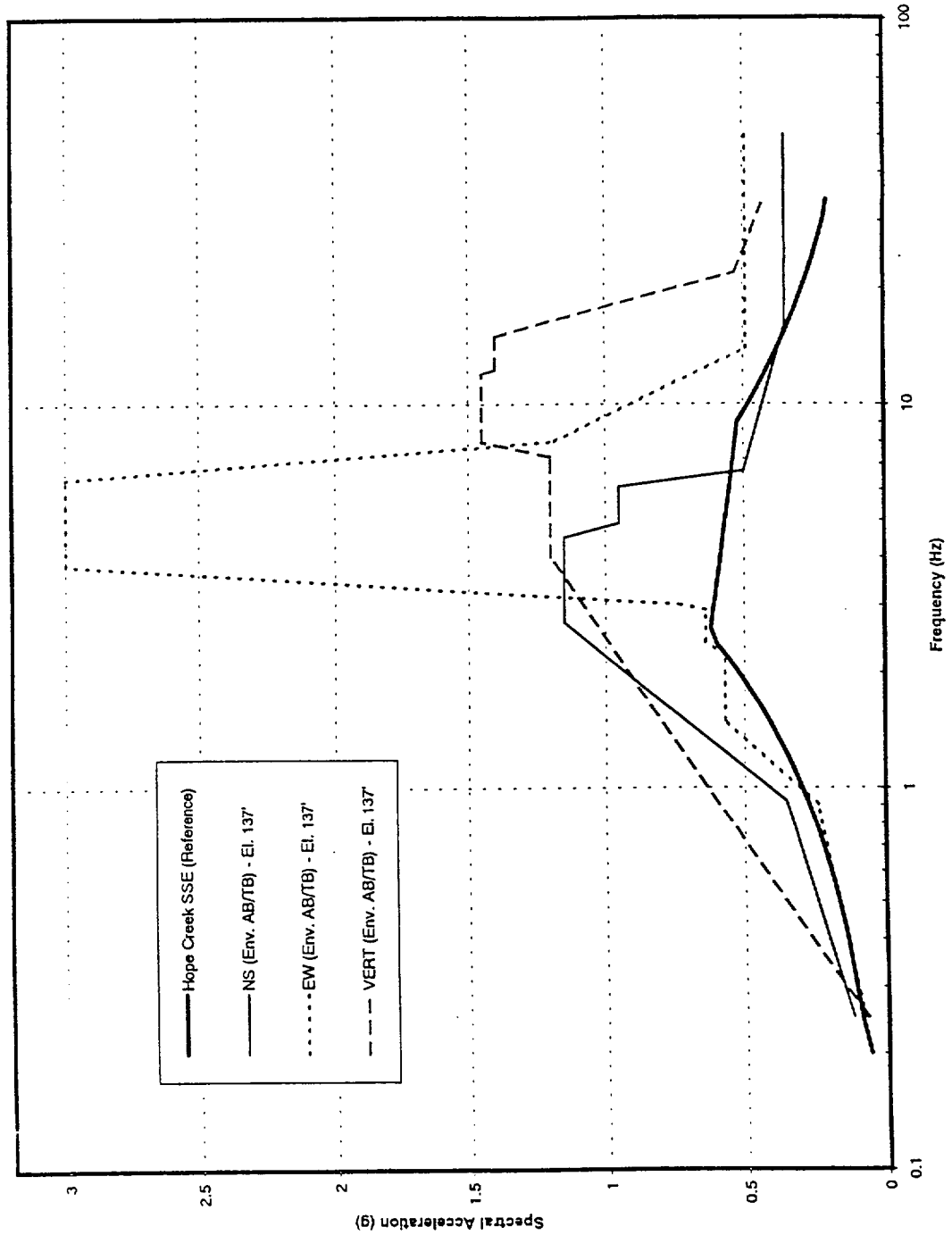

Figure 2 - Enveloped Floor Response Spectra with Reference to SSE Ground Spectrum (5% Damping, El. 137' Auxiliary/Turbine Bldgs.)

5.0 CONCLUSION

The results from the analyses of the non-seismic Class I portions of the Hope Creek MSIV ALT pathway piping have shown that the combined pipe stresses for the various loading combinations, including SSE, considered in accordance with the B31.1 code are within the appropriate stress allowables.

6.0 REFERENCES

1. "BWROG Report for Increasing MSIV Leakage Rate Limits and Elimination of Leakage Control Systems", GE NEDC-31858P, Revision 2, September 1993.

2. ANSI/ASME B31.1 – Power Piping.

3. AutoPIPE Version 4.70.06, Rebis Industrial Working Group Software, Walnut Creek, CA.

4. PSE&G Hope Creek Generating Station, Drawing No. 1-P-AB-06, "System Isometric Reactor Building Main Steam Drains to Condenser", Rev. 6.

5. PSE&G Hope Creek Generating Station, Calculation No. C-1950, "Reactor Building Main Steam Drains to Condenser", Rev. 6.

6. PSE&G Hope Creek Generating Station, Specification No. 10855-G-051(Q), Revision 0.

7. PSE&G Hope Creek Generating Station, Miscellaneous Support Drawings for Line Nos. 028-DBD-4", 028-DBD-3" and 028-DBD-2", Drawing Series 1-P-AB-028.

CALCULATION COVER SHEET

Calculation No. 200965-C-002

Project: PSE&G HOPE CREEK MSIV

Calculation Title: SEISMIC ADEQUACY VERIFICATION OF TYPICAL PIPE SUPPORT ANCHORAGE ASSOCIATED WITH THE MSIV ALTERNATE LEAKAGE TREATMENT PATHWAY

References: SEE SECTION 5.0

Attachments: A (14 PAGES)

Total Number of Pages (Including Cover Sheet): 11 + 14 = 25

Revision Number	Approval Date	Description of Revision	Originator	Checker	Approver
0	9/15/99	ORIGINAL ISSUE	J.O. DIZON	S.P. HARRIS	S.P. HARRIS

Table of Contents

Page

1.0 PURPOSE 3

2.0 EVALUATION METHODOLOGY 3

3.0 TYPICAL PIPE SUPPORT ANCHORAGE EVALUATIONS 4

3.1 Dead Load Supports 4

3.2 Lateral Supports 5

4.0 CONCLUSION 10

5.0 REFERENCES 11

Tables

Table 1 – Seismic Evaluation Summary of Typical ALT Pipe Support Anchorage 7

Figures

Figure 1 – Mathematical Model of the Main Steam Drains to the Condenser 8

Figure 2 – Enveloped Floor Response Spectra with Reference to SSE Ground Spectrum (5% Damping, El. 137' Auxiliary/Turbine Buildings) 9

Attachment

A Support Drawings of Typical Pipe Supports for the Main Steam Drain Piping to the Condenser (13 pages not including cover page) 12-25

1.0 PURPOSE

The purpose of this calculation is to illustrate the process of demonstrating the seismic adequacy of the typical pipe support anchorage associated with the MSIV Alternate Leakage Treatment (ALT) pathway at the Hope Creek Generating Station.

2.0 EVALUATION METHODOLOGY

Support anchorages associated with the Hope Creek MSIV ALT pathway drain piping were evaluated on a deterministic basis following standard engineering practices, and were based on the support loads obtained from the analyses for the ALT pathway piping system (Reference 3). Anchorage allowable capacities are based on those presented in the SQUG Generic Implementation Procedure (GIP, Reference 2). AISC (Reference 8) allowables are used to verify the capacities of the structural support members.

The mathematical model used in the static and dynamic analyses of this system, including support locations, is shown in Figure 1. Load cases considered are as follows:

Static:

GR – Gravity

P1 – Pressure at 1250 psi

T1 – Temperature at 575°F

U1 – ¾" Building settlement at pipe supports in the Reactor/Auxiliary Bldgs. (static displacement in the vertical direction)

Dynamic:

R1 – SSE enveloped response spectrum in the X (N-S) direction (see Fig. 2)

R2 – SSE enveloped response spectrum in the Y (Vertical) direction (see Fig. 2)

R3 – SSE enveloped response spectrum in the Z (E-W) direction (see Fig. 2)

R_{SSE} – Combined SSE response in the X, Y and Z directions

For support evaluations, the resulting pipe support loads from the various load cases considered in the analyses were combined as follows:

$$\text{TOTAL LOAD} = \text{SUPPORT LOAD } (GR + T1 + U1 + R_{SSE})$$

3.0 TYPICAL PIPE SUPPORT ANCHORAGE EVALUATIONS

The Hope Creek MSIV ALT pathway drain piping is supported by a combination of rigid supports, spring hangers, and rod hangers. Support drawings for selected pipe supports in the system are contained in Attachment A. Critical support attributes, such as support anchorage that may exhibit non-ductile failure modes, were evaluated. The following examples illustrate the general evaluation process performed to verify the seismic adequacy of typical support anchorage. The results are summarized in Table 1.

3.1 Dead Load Supports

Dead load supports in the ALT pathway piping system generally consist of standard support components such as single rod and trapeze rod hangers with welded attachments to structural steel members or embedded plates, or expansion anchors to concrete walls. The total calculated support loads for selected supports, as obtained from the analyses performed for the piping system (Reference 3), are listed below:

Node No.	Support Drawing No. 1-P-AB-028-	Rod Size (in.)	Vertical Support Loads (lbs.)				Total Support Loads (lbs.)
			GR	T1	U1	R_{SSE}	
70	H31, R2	5/8	493	252	29	1,219	1,993
210	H26, R2	5/8	462	218	1	1,016	1,697
200	H25, R2	5/8	291	77	1	871	1,240
195	H24, R2	5/8	489	97	1	369	956
155	H18, R3	5/8	416	12	2	455	885

Based on the review of the respective configurations (see Attachment A) and the calculated total loads of the above supports, Support H31 was selected for bounding evaluations. The demand to capacity ratios (D/C's) were calculated for the respective attributes being considered. A D/C ratio of less than 1.0 indicates that the component is adequate.

Support H31

Verify cantilever bracket section, *L* 4"x4"x1/2" (S = 1.97 in^3, Reference 8)

M_{max} = 1,993 x 9 = 17,937 in-lbs. (see Att. A, p. 13 for support configuration details)

f_b = 17,937/1.97 = 9.1 ksi < F_b = 0.6 x 36 = 21.6 ksi (Reference 8)

(D/C = 0.42)

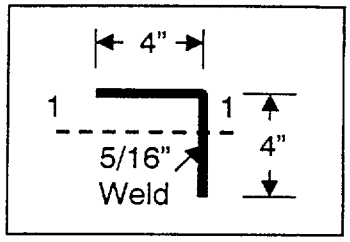

Verify weld attachment to the embedded plate,

$S_{w(1-1)}$ = 4^2 (4x4+4) / {6 (2x4+4)} = 4.44 in^2 (Reference 9)

$f_w = \{(17{,}937/4.44)^2 + (1{,}993/(2x4))^2\}^{1/2}$ = 4.05 k/in

< F_b = 30.6 x 0.707 x 5/16 = 6.76 k/in (Reference 2)

(D/C = 0.60)

3.2 Lateral Supports

Lateral supports in the ALT pathway piping system consist of standard support components such as rigid strut assembly with base plate bolted to concrete walls, or structural steel frame supports. Selected supports, with their corresponding total calculated support loads as obtained from the analyses performed for the piping system (Reference 3), are listed below:

Node No.	Support Drawing No. 1-P-AB-028-	Dir.	Support Loads (lbs.)				Total Support Loads (lbs.)
			GR	T1	U1	R_{SSE}	
130	H16, R5	F_x	3	592	3	859	1,457
226	H28, R2	F_x	3	86	1	950	1,040
191	H23, R3	F_x	3	120	1	818	942

Pipe supports H16 and H23 are structural steel frame supports welded to the Turbine Building structural members, and have similar configuration (see Attachment A). Thus, bounding support anchorage evaluations were performed for Support H16. Support H28 is a rigid sway strut with base plate bolted to the concrete walls, and was selected to verify the capacity of the expansion anchor bolts.

Support H16

Verify structural steel sections, W4x13 (S_{min} = 5.46 in^3, Reference 8)

$M_A = M_B$ = 1,457 x 46 = 67,022 in-lbs

(see Att. A, pp. 18-19 for support details)

f_b = 67,022/5.46 = 12.3 ksi < F_b = 0.6 x 36 = 21.6 ksi

(Reference 8)

(D/C = 0.57)

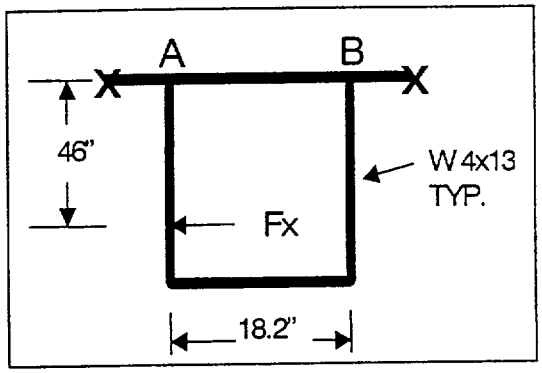

Verify overhead weld attachment to TB structural steel,

$S_{w(1-1)}$ = 4.16 x 4.06 = 16.89 in^2 (Reference 9)

A_w = 4.06 + 4.06 = 8.12 in

$f_w = \{(67{,}022/16.89)^2 + (1{,}457/8.12)^2\}^{1/2}$ = 4.0 k/in

< F_b = 30.6 x 0.707 x 1/4 = 5.4 k/in (Reference 2)

(D/C = 0.74)

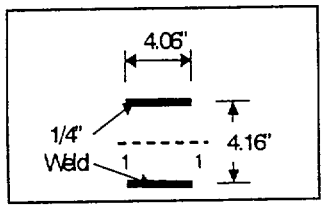

Support H28

Verify anchor bolt capacities, 5/8" dia. expansion type

Fx = 1,040 lbs.

Max. Pullout load per bolt, P = 1,040/4 = 260 lbs.

Per Appendix C of the GIP (Reference 2):

P_{nom} = 3,170 lbs. for 5/8" dia. expansion type anchor bolt

RT_p = 0.6 (Pullout capacity reduction factor for unknown type expansion anchors)

$P_{all} = P_{nom} \times RT_p$ = 3,170 x 0.6 = 1,902 lbs. >> P = 260 lbs. **(D/C = 0.14)**

Table 1
Seismic Evaluation Summary of
Typical ALT Pipe Support Anchorage

Node No.	Support No.	Support Anchorage Attributes	D/C Ratio
70	H31	Weld	0.60
130	H16	Weld	0.74
226	H28	Anchor Bolt	0.14

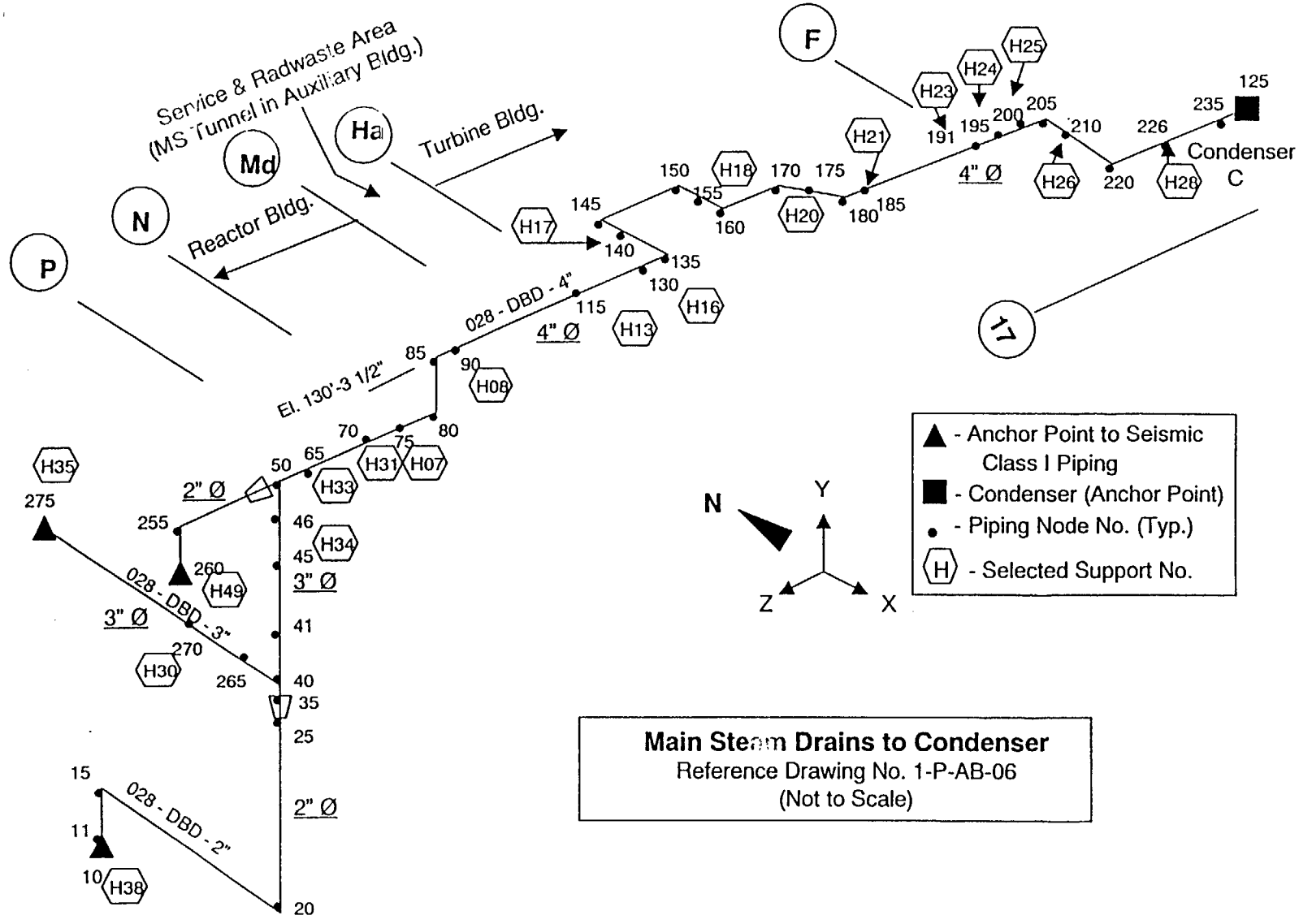

Figure 1- Mathematical Model of the Main Steam Drains to the Condenser

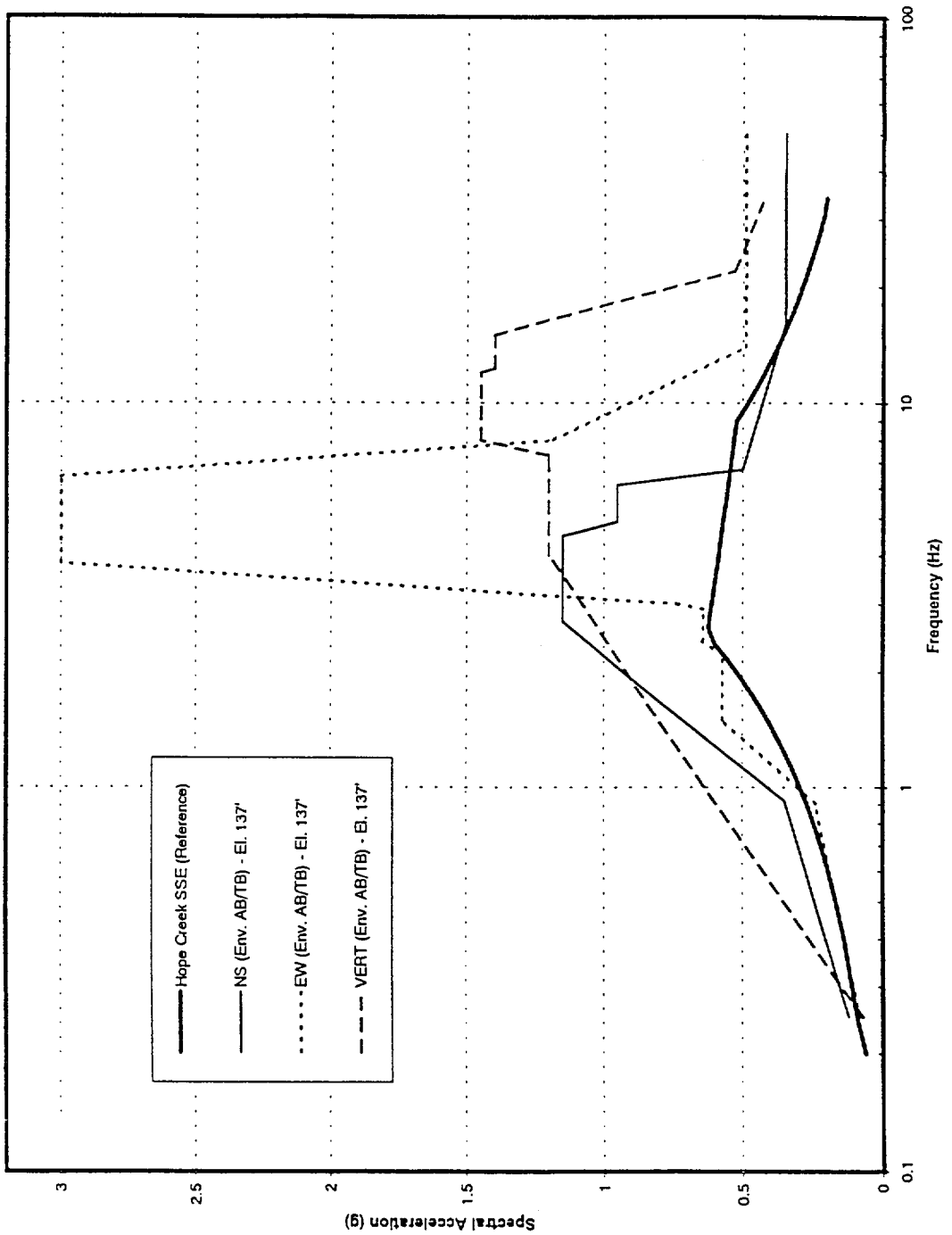

Figure 2 - Enveloped Floor Response Spectra with Reference to SSE Ground Spectrum (5% Damping, El. 137' Auxillary/Turbine Bldgs.)

4.0 CONCLUSION

The pipe support anchorage evaluation results for the non-seismic Class I portions of the Hope Creek MSIV ALT pathway piping system have shown that the demand on the support anchorages, including SSE loading, are generally within the appropriate allowable capacities.

5.0 REFERENCES

1. "BWROG Report for Increasing MSIV Leakage Rate Limits and Elimination of Leakage Control Systems", GE NEDC-31858P, Revision 2, September 1993.

2. Seismic Qualification Utility Group (SQUG), "Generic Implementation Procedure (GIP) for Seismic Verification of Nuclear Plant Equipment", Revision 2A, March 1993.

3. EQE Calculation No. 200965-C-001, "Bounding Seismic Analysis for the MSIV Alternate Leakage Treatment Pathway – Hope Creek Generating Station", Revision 0, 9/15/99.

4. PSE&G Hope Creek Generating Station, Drawing No. 1-P-AB-06, "System Isometric Reactor Building Main Steam Drains to Condenser", Rev. 6.

5. PSE&G Hope Creek Generating Station, Calculation No. C-1950, "Reactor Building Main Steam Drains to Condenser", Rev. 6.

6. PSE&G Hope Creek Generating Station, Specification No. 10855-G-051(Q), Revision 0.

7. PSE&G Hope Creek Generating Station, Miscellaneous Support Drawings for Line Nos. 028-DBD-4", 028-DBD-3" and 028-DBD-2", Drawing Series 1-P-AB-028.

8. AISC Manual of Steel Construction.

9. Blodgett, Omar. "Design of Welded Structures", 1966.

ATTACHMENT A

Support Drawings of Typical Pipe Supports for the Main Steam Drain Piping to the Condenser

Support No.	Drawing No.	Rev.	No. of Sheets	Support Type	Page no(s).
H31	1-P-AB-028-H31	2	1	Rod Hanger	13
H26	1-P-AB-028-H26	2	1	Rod Hanger	14
H25	1-P-AB-028-H25	2	1	Rod Hanger	15
H24	1-P-AB-028-H24	2	1	Rod Hanger	16
H18	1-P-AB-028-H18	3	1	Rod Hanger	17
H16	1-P-AB-028-H16	5	2	Rigid Frames	18-19
H28	1-P-AB-028-H28	2	1	Rigid Sway Strut	20
H23	1-P-AB-028-H23	3	1	Rigid Frames	21
H35	1-P-AB-028-H35	5	4	Typical Anchor Support	22-25

ITEM NO	NO. REQ'D	FIG. No.	SIZE	DESCRIPTION		MAT'L
1	1	-	L 4x4x1/2 x 1'-0" LG			
2	1	140N	5/8" x 1'-4"	Rod W/ 6" RHT BE		
3	3	-	5/8"	Hex Nuts		
4	1	290	5/8"	Weldless Eye Nut		
5	1	295	4"	DOUBLE Bolt Pipe Clamp Provide Lock Nuts		
			NOTE: ALL MAT'L TO BE A-36 OR SA-36 U.N.O.			

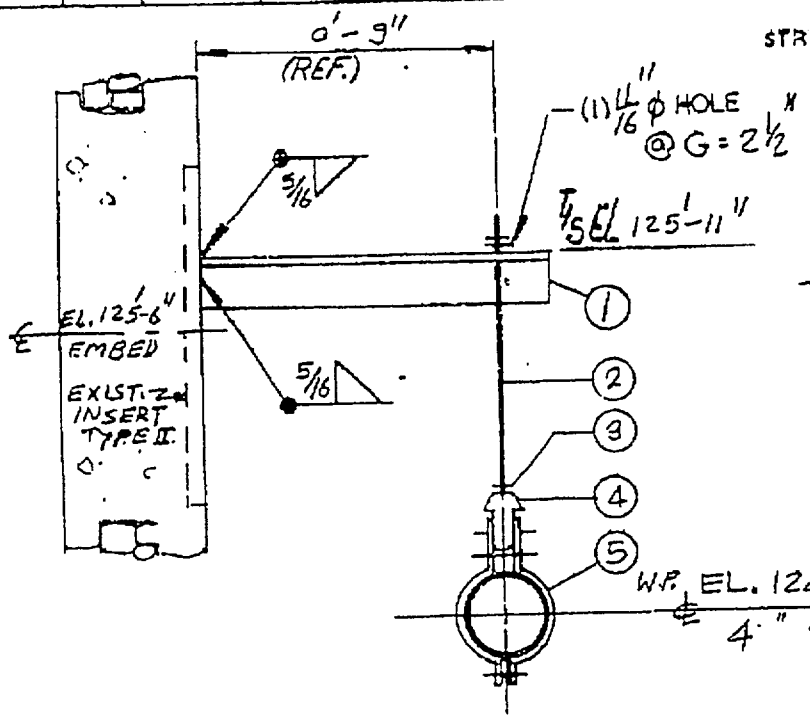

ELEVATION A-A

STRESS PROB. NO. C-1950-2 RDP 70

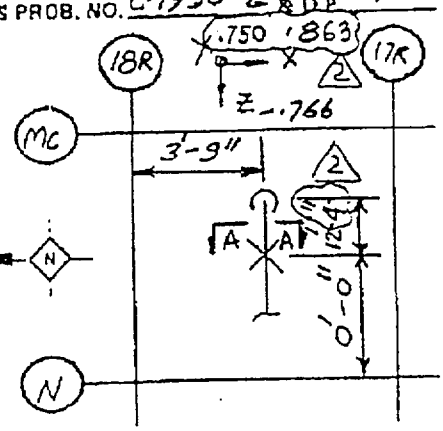

LOCATION PLAN
AREA 14 | R10

NOTE
1. HANGER CRITICAL
2. CODE B31.1 CLASS -
3. SEISMIC CATEGORY 2

FORCE	THER.#	WT.#	±SEIS.#	TOTAL#
FY	-231	-489	—	-720

HYDRO LOAD -489 #
PIPE LOAD —
MARK NO 1-AB-028-H31

REV.	DATE	REVISIONS	BY	CH'K	DESD	SUPV	ENG	STRS	PRCU
2	11/1/88	ISSUED FOR FINAL STRESS CALC. & INCORP. LOC. PER ISO Fg°	H.V.P.		H.V.P.				

PUBLIC SERVICE ELECTRIC AND GAS COMPANY
HOPE CREEK GENERATING STATION
MOD. 1 & 2 UNITS

BECHTEL SAN FRANCISCO

Sys. Iso. 1-P-AB-06 REV 11
REF. DWGS. PIPE P- — 2
STEEL C- C768-1 SH. 2 REV. 11
C- 2558-1 REV. 18

PIPE SUPPORT REACTOR BLDG. MAIN STEAM DRAINS TO CONDENSER	JOB NO.	DRAWING NO.	REV.
	10855	1-P-AB-028-H31	2

SR. - RIGID - 240

ITEM NO.	NO. REQ'D	FIG. NO.	SIZE	DESCRIPTION		MAT'L
1	1	636	5/8"	Welded Beam Attachment W/ PIN & COTTER PIN		
2	1	230	5/8"	TURNBUCKLE		
3	1	140N	5/8" X 2'-0"	Rod w/ 6" THE		
4	3	—	5/8"	Hex Nut		
5	2	290	5/8"	Weldless Eye Nut		
6	1	295	4	DOUBLE Bolt Pipe Clamp Provide Lock Nut		
7	1	—	W 4 X 13 X 1'-7 3/4" LG.			
8	1	253N	5/8" X 1'-4"	ROD w/ 6" RHT & 6" LHT		
			NOTE:	ALL MAT'L TO BE SA-36 OR A-36 U.N.O.		

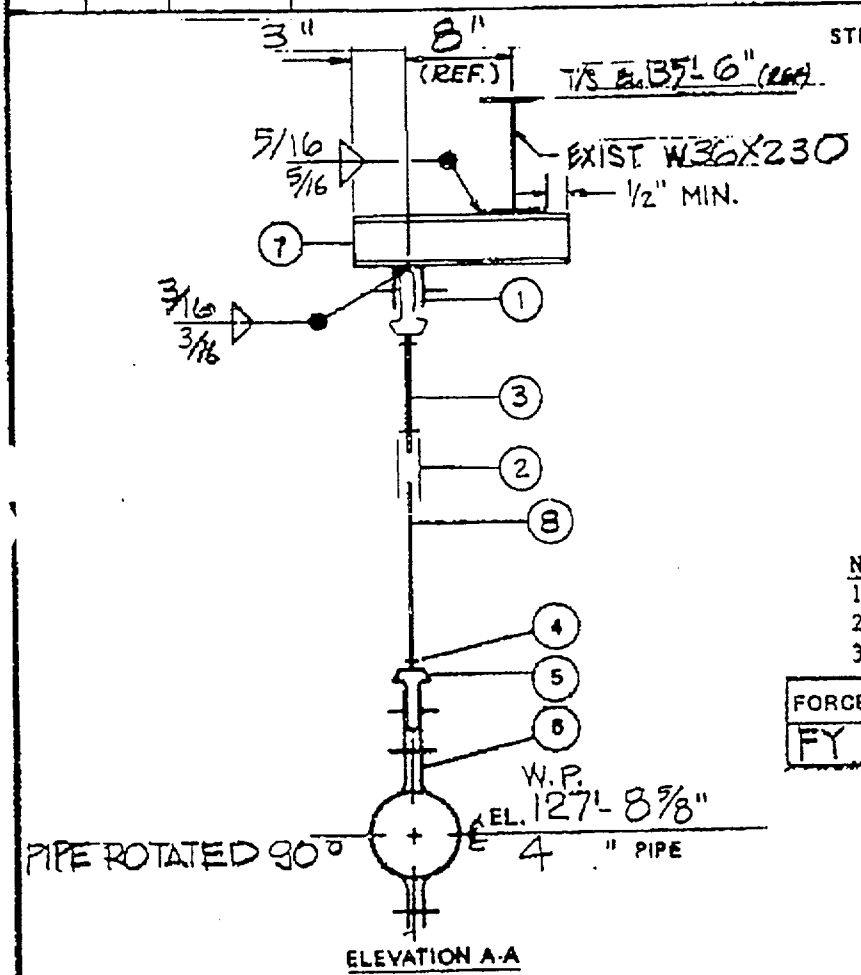

ELEVATION A-A

STRESS PROB. NO C-1950-2 & D.P. 210

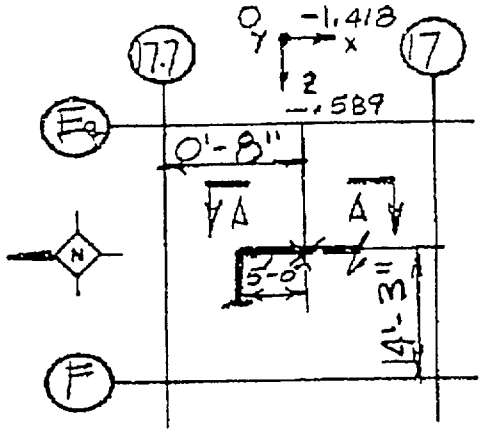

LOCATION PLAN
AREA 06/A-1

NOTE
1. HANGER CRITICAL
2. CODE B.31.1 CLASS —
3. SEISMIC CATEGORY 2

FORCE	THER.=	WT.=	±SEIS.=	TOTAL=	E.W.#
FY	1135	-404	—	-404	—

HYDRO LOAD -404 #
PIPE LOAD —
MARK NO. 1-AB-028-H26

SR-RIGID-225

REV.	DATE	REVISIONS	BY	DESIGN	CH'K	DESIGN SUPV'R	ENG'R	STRS	PROJ
2	11/14/84	ISSUED FOR FINAL STRESS CALC	K.V.P.	K.V.P.	[illegible]	[illegible]	[illegible]	[illegible]	

PUBLIC SERVICE ELECTRIC AND GAS COMPANY
HOPE CREEK GENERATING STATION
NOS. 1 & 2 UNITS

BECHTEL SAN FRANCISCO

REF. DWGS. SYS ISO 1-P-AB-06 REV. 11
PIPE P-(-) 2
STEEL C-2015-1 REV 11

PIPE SUPPORT REACTOR BLDG. MAIN STEAM DRAINS TO CONDENSER	JOB NO.	DRAWING NO.	REV.
	10855	1-P-AB-028-H26	2

ITEM NO.	NO. REQ'D	FIG. NO.	SIZE	DESCRIPTION		MAT'L
1	1	66	5/8"	Welded Beam Attachment W/ PIN & COTTER PIN		
2	1	—	W4X13X1'-11" LG.			
3	1	253N	5/8"X3'-6"	Rod w/ 6" RHT & 6" LHT		
4	1	—	5/8"	Hex Nut		
5	1	290	5/8"	Weldless Eye Nut		
6	1	295	4"	DOUBLE Bolt Pipe Clamp Provide Lock Nut		
7	1	290L	5/8"	WELDLESS EYE NUT W/L.H. TAP		
			NOTE:	ALL MAT'L TO BE SA-36 OR A-36 U.N.O.		

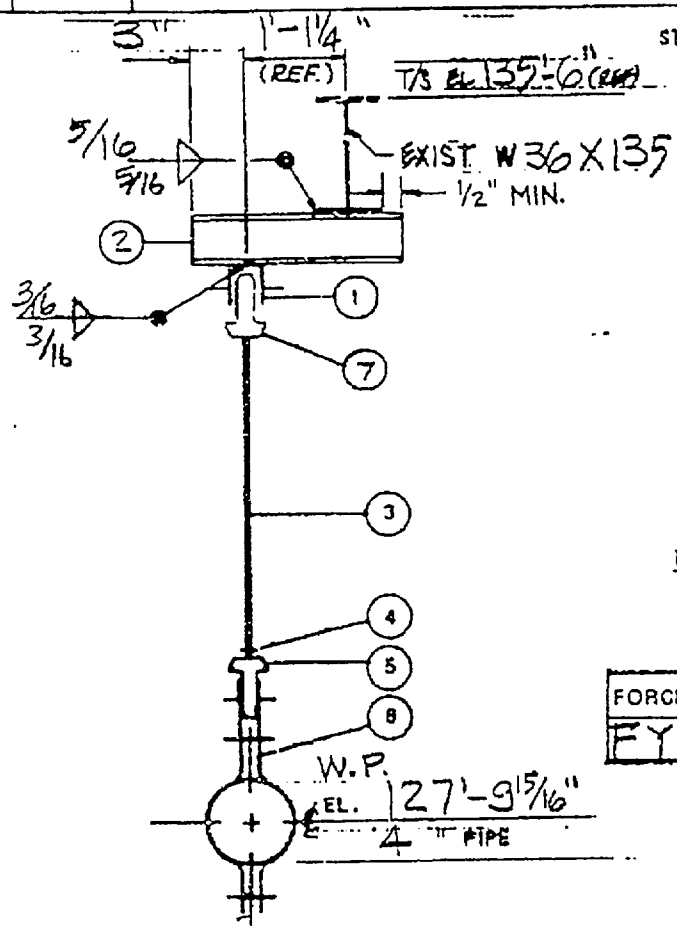

ELEVATION A-A

STRESS PROB NO. C-1950-2 & D.P. 200
0 -2.328

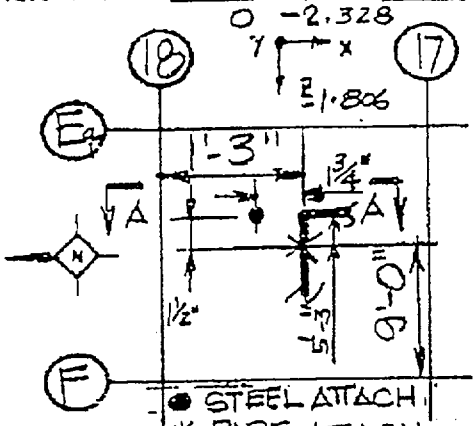

● STEEL ATTACH.
✱ PIPE ATTACH.
LOCATION PLAN
AREA 06/A-1

NOTE
1. HANGER CRITICAL
2. CODE B31.1 CLASS —
3. SEISMIC CATEGORY 2

FORCE	THER. =	WT. =	±SAMBS	TOTAL	E.W.#
FY	-28	-324	0	-352	—

HYDRO LOAD -324 #
PIPE LOAD —
MARK NO. 1-AB-028-H25

SR-RIGID-224

REV.	DATE	REVISIONS	BY	DESD	CH'K	DESIGN SUPVR	ENGTR	STRS	PROJ
2	4/4/89	ISSUED FOR FINAL STRESS CALC.	H.V.P.	H.V.P.	2	[illegible]	HS	[illegible]	

PUBLIC SERVICE ELECTRIC AND GAS COMPANY
HOPE CREEK GENERATING STATION
MOD. 1 & 2 UNITS

BECHTEL SAN FRANCISCO

REF. DWGS. SYS ISO 1-P-AB-06 REV. 11
PIPE P-[illegible]
STEEL C-2015-1 REV. 11

PIPE SUPPORT REACTOR BLDG. MAIN STEAM DRAINS TO CONDENSER	JOB NO.	DRAWING NO.	REV.
	10855	1-P-AB-028-H25	2

ITEM NO	NO. REQ'D	Fig. No.	SIZE	DESCRIPTION		MAT'L
1	1	66	5/8"	Welded Beam Attachment W/ PIN & COTTER PIN		
2	1	290L	5/8"	Weldless Eye Nut w/L.H. Tap		
3	1	253N	5/8" X 3'-7"	Rod w/ 6" RHT & 6" LHT		
4	1	—	5/8"	Hex Nut		
5	1	290	5/8"	Weldless Eye Nut		
6	1	295	4"	DOUBLE Bolt Pipe Clamp Provide Lock Nut		

STRESS PROB. NO. G1350-2 & D.P. 195

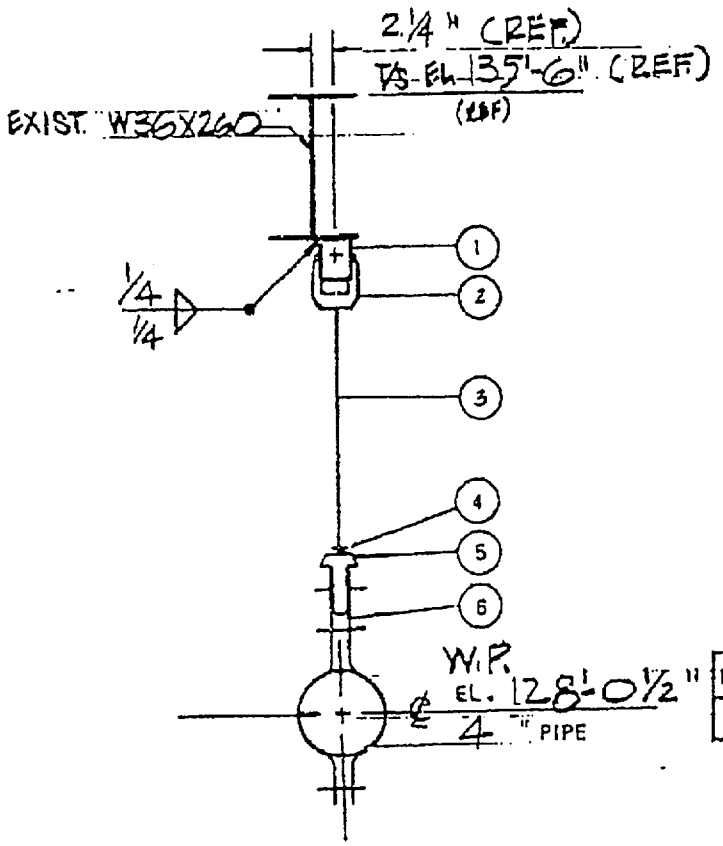

ELEVATION A-A

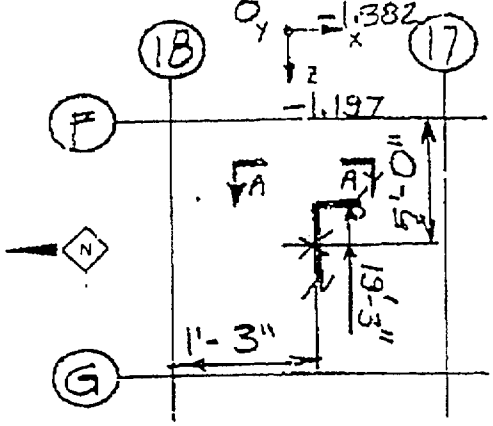

LOCATION PLAN
AREA 10/A 2

NOTE
1. HANGER CRITICAL
2. CODE B.31.1 CLASS —
3. SEISMIC CATEGORY 2

FORCE	THER.=	WT.=	SAMBS	TOTAL=	E.W.=
FY	76	-481	0	-481	—

HYDRO LOAD -481 #
PIPE LOAD —
MARK NO. 1-AB-028-H24

SR-RIGID-232

REV	DATE	REVISIONS	BY	CH'K	DESD	SUPV	ENG	STRS	PROJ
2	1/24/86	ISSUED FOR FINAL STRESS CALC.	H.V.P	[illegible]	H.V.P	[illegible]	[illegible]	[illegible]	

PUBLIC SERVICE ELECTRIC AND GAS COMPANY
HOPE CREEK GENERATING STATION
NOS. 1 & 2 UNITS

BECHTEL SAN FRANCISCO

Sys. Iso. 1-P-AB-06 REV 11
REF. DWGS. PIPE P-[illegible]
STEEL C-2015-1 REV 11

PIPE SUPPORT REACTOR BLDG. MAIN STEAM DRAINS TO CONDENSER	JOB NO.	DRAWING NO.	REV.
	10855	1-P-AB-028-H24	2

ITEM NO	NO. REQ'D	FIG. NO.	SIZE	DESCRIPTION	MAT'L
1	1	66	5/8"	Welded Beam Attachment W/PIN & COTTER PIN	
2	1	290L	5/8"	Weldless Eye Nut w/L.H. Tap	
3	1	253N	5/8" X2'-7"	Rod w/ 6" RHT & 6" LHT.	
4	1	—	5/8"	Hex Nut	
5	1	290	5/8"	Weldless Eye Nut	
6	1	295	4"	DOUBLE Bolt Pipe Clamp PROVIDE LOCK NUT	
7	1	—	W4X13 X 1'-6" LG		

NOTE:
ALL MAT'L. TO BE SA-36 OR A-36 U.N.O.

STRESS PROB. NO. C1950-2, & D.P. 155

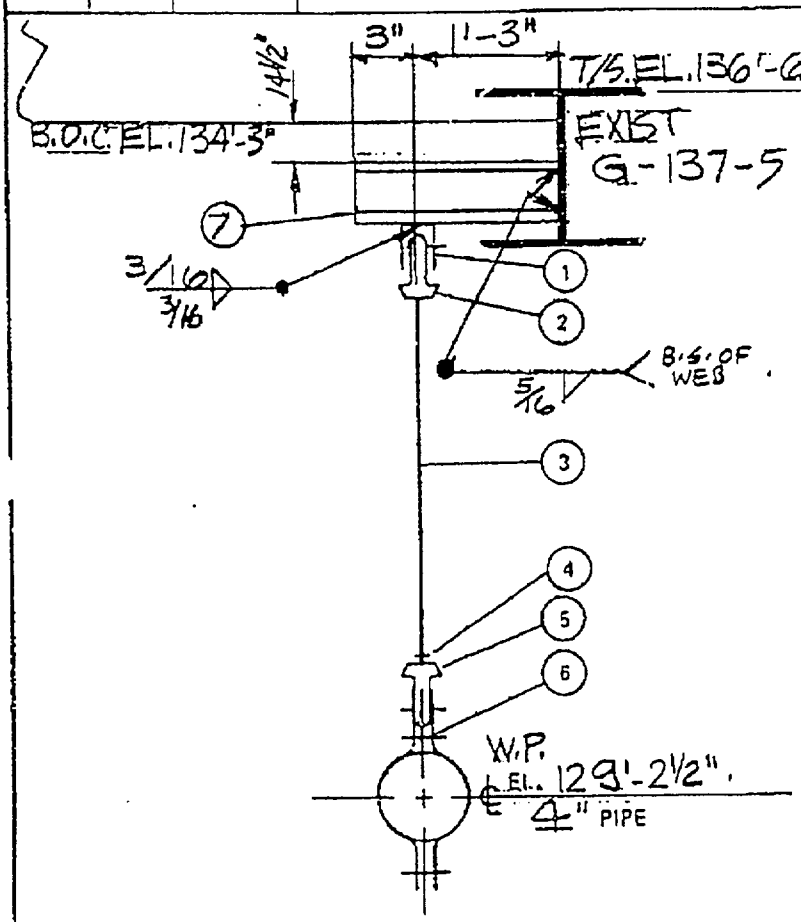

ELEVATION A-A

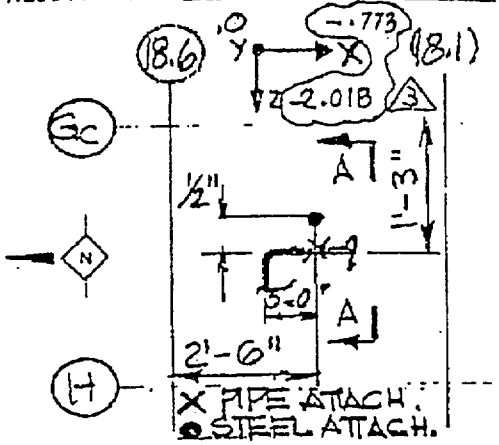

LOCATION PLAN
AREA 10 / A-2

NOTES
1. HANGER CRITICAL
2. CODE B 31.1 CLASS
3. SEISMIC CATEGORY 2

FORCE	THER.#	WT.#	±SAMBS	TOTAL	E.W.#
FY	-12	-426	19	-456	—

HYDRO LOAD -426 #
LOAD —
MARK NO. 1-AB-028-H18

REV.	DATE	REVISIONS	BY	CH'K	DESD	SUPV	ENG	SIRS	PROJ
3	[illegible]	ISSUED FOR FINAL STRESS CALC.	H.V.P	[illegible]	H.V.P	[illegible]	[illegible]	[illegible]	

PUBLIC SERVICE ELECTRIC AND GAS COMPANY
HOPE CREEK GENERATING STATION
NOS. 1 & 2 UNITS

BECHTEL SAN FRANCISCO

SYS ISO. 1-P-AB-06 REV. 11
REF. DWGS. PIPE —
STEEL C-2019-112 REV. 11 3

PIPE SUPPORT REACTOR BLDG.
MAIN STEAM DRAINS TO CONDENSER

JOB NO.	DRAWING NO	REV.
10855	1-P-AB-028-H18	3

SK-RIGID-226

ITEM NO	NO REQ'D	FIG. NO.	SIZE DESCRIPTION	MAT'L
1	2	—	W4 X 13 X 4'-4 3/16" LG.	
2	1	—	W4 X 13 X 1'-2 7/8" LG	
3	1	—	4" TWO BOLT SPECIAL PIPE CLAMP WITH THREE STANCHION PER DWG. NO P-0782 (SEE FIELD NOTE)	
4	1	—	W6 X 20 X 9'-0" LG.	
5	2	—	1/2 X 4" X 10" PL	
6	6	—	3/8" x 2 7/8" x 5 3/8" STIFFENER PLATE PER DWG. NO. P-588	
7	2	—	PL 3/8" x 5 3/8" x 1'-6" LG	
			NOTE:	
			ALL MAT'L TO BE SA-36 OR A-36 U.N.O.	

STRESS PROB. NO. C-1950-2 , & D.P. 130

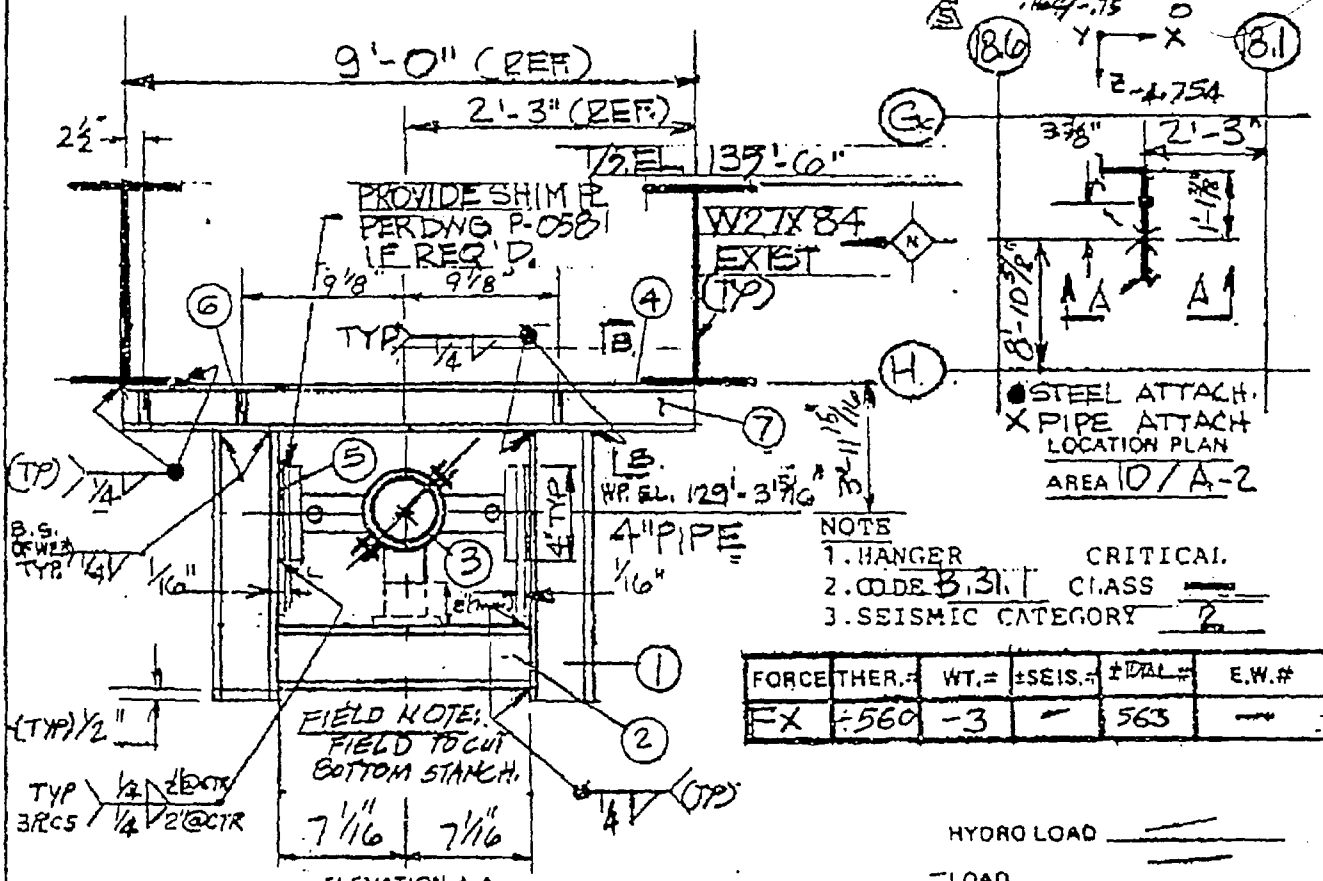

NOTE
1. HANGER CRITICAL
2. CODE B.31.1 CLASS —
3. SEISMIC CATEGORY 2

FORCE	THER.#	WT.#	±SEIS.#	±DIAL.#	E.W.#
FX	-560	-3	—	563	—

HYDRO LOAD —

LOAD —

MARK NO 1-AB-028-H16

REV	DATE	REVISIONS	BY	CH'K	DESD	SUPV	ENG	STRS	PROJ
5	11/4/8	ISSUED FOR FINAL STRESS CALC.	H.V.P	[illegible]	H.V.P	[illegible]	[illegible]	[illegible]	

PUBLIC SERVICE ELECTRIC AND GAS COMPANY
HOPE CREEK GENERATING STATION
NOS. 1 & 2 UNITS

BECHTEL SAN FRANCISCO

SYS ISO 1-P-AB-06 REV. 11
REF. DWGS. PIPE
STEEL C-2015-1 REV. 11

PIPE SUPPORT REACTOR **BLDG.**
MAIN STEAM DRAINS TO CONDENSER

JOB NO.	DRAWING NO.	REV.
10855	SH. 1 OF 2 1-P-AB-028-H16	5

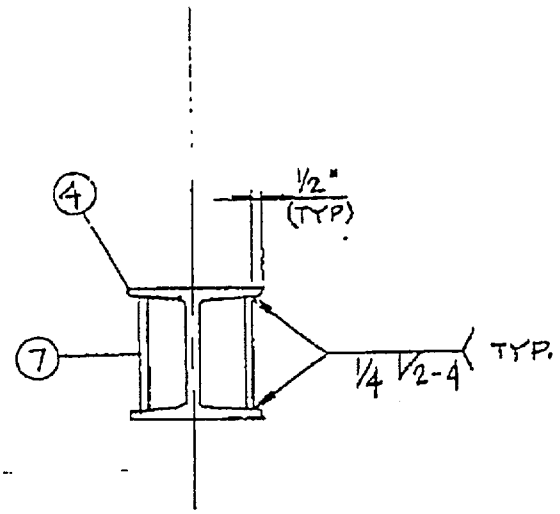

SECTION B-B

MARK NO. 1-AB-028-H16

REV.	DATE	REVISIONS	BY	CH'K	DESD	SUPV	ENG	STRS	PROJ
5	11/14/78	SEE SHT 1 OF 2	H.V.P	[illegible]	H.V.P	[illegible]	HS	[illegible]	

PUBLIC SERVICE ELECTRIC AND GAS COMPANY
HOPE CREEK GENERATING STATION
NOS. 1 & 2 UNITS

BECHTEL SAN FRANCISCO

REF. DWGS. SYS ISO — PIPE — STEEL — 5

PIPE SUPPORT REACTOR BLDG. MAIN STEAM DRAIN TO CONDENSER	JOB NO.	DRAWING NO.	REV.
	10855	SH. 2 OF 2 1-P-AB-028-H16	5

ITEM NO	NO. REQ'D	FIG. NO.	SIZE	DESCRIPTION	MAT'L
1	1	211	A	SWAY STRUT ASSY, O.D. PIPE 4½" W = 3'-2⅜", LOAD = 325#	
2	1	—		5/8" x 12" x 12" PL	
3	8	—		5/8" HEX NUTS	
4	4	—		5/8" EXPANSION CONC. ANCHOR BOLT PER SPEC. C-1360 (Q) 2	
				NOTE: ALL MAT'L TO BE SA-36 OR A-36 U.N.O.	

STRESS PROB. NO. C-1950-2 2 , & D.P. 226

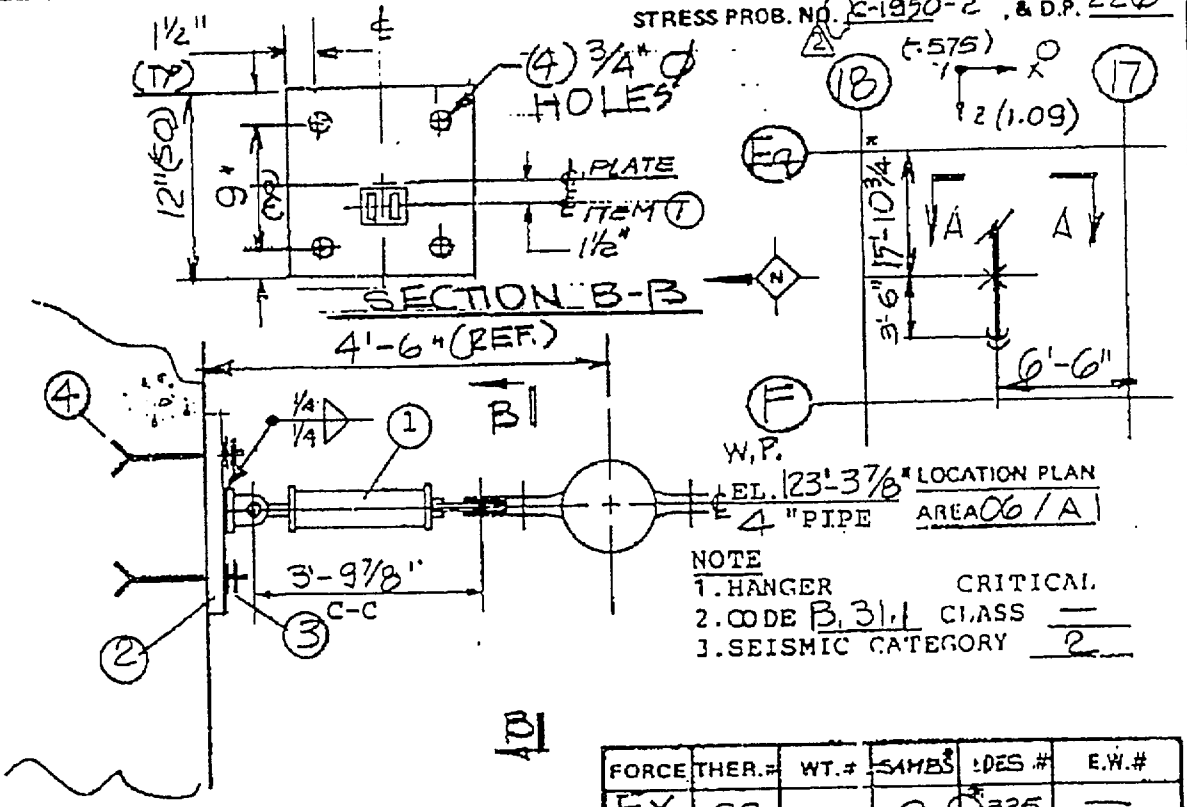

FORCE	THER.#	WT.#	SAMBS	DES.#	E.W.#
FX	86	—	0	325	—

* MIN. DESIGN LOAD. 2

ELEVATION A-A

MARK NO 1-AB-028-H28

H-REST-326

REV	DATE	REVISIONS	BY	CH'K	DES	SUPV	ENG	STRS	PROJ
2	11/4/85	ISSUED FOR FINAL STRESS CALC.	H.V.P		H.V.P				

PUBLIC SERVICE ELECTRIC AND GAS COMPANY
HOPE CREEK GENERATING STATION
NOS. 1 & 2 UNITS

BECHTEL SAN FRANCISCO

REF. DWGS. SYS ISO 1-P-AB-C6 REV. 11
PIPE P-2015-1 REV. 11 2
STEEL C-1734-1541-REV. 15

PIPE SUPPORT TURBINE BLDG. MAIN STEAM DRAINS TO CONDENSER	JOB NO.	DRAWING NO.	REV.
	10855	1-P-AB-028-H28	2

ITEM NO	NO. REQ'D	FIG. NO.	SIZE	DESCRIPTION	MAT'L
1	1	—	W4X13 X 1'-10 3/8" LG.		
2	2	—	W4 X 13 X 4'-5 5/8" LG.		
3	1	—	4" TWO BOLT SPECIAL PIPE CLAMP WITH TWO STANCHIONS PER P-0582		
4	4	—	3/8" X 1 7/8" X 3 3/8" STIFFENER PLATES PER DWG. NO. P-588		

NOTE:
ALL MAT'L TO BE SA-36 OR A-36 U.N.O.

STRESS PROB. NO. C-1950-2 & D.P. 191

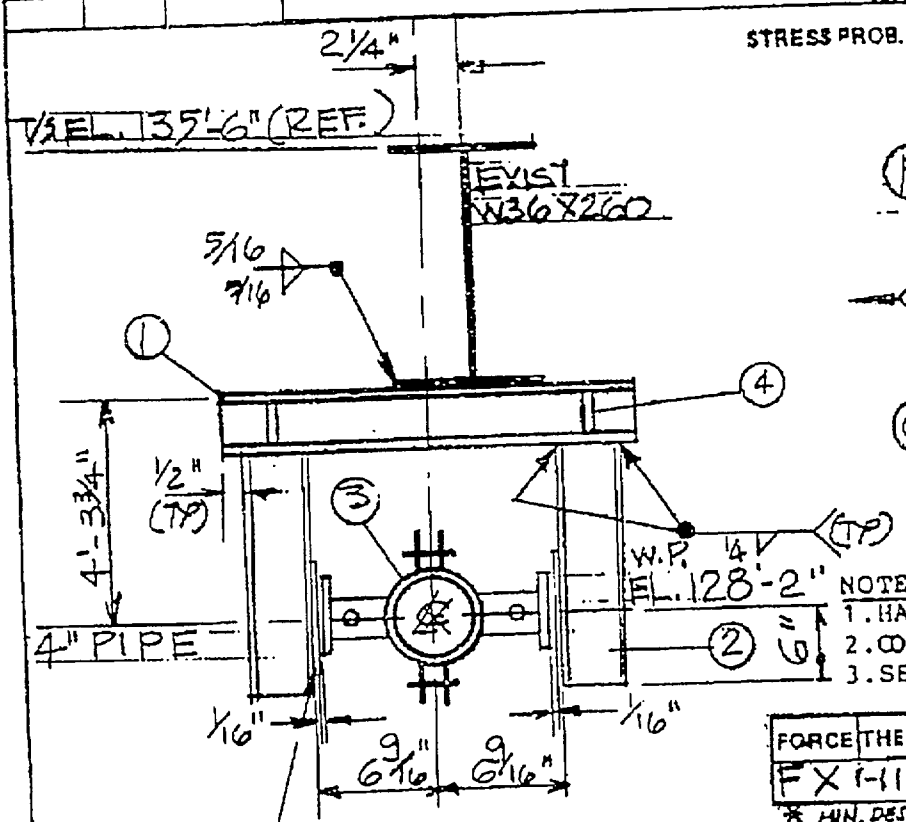

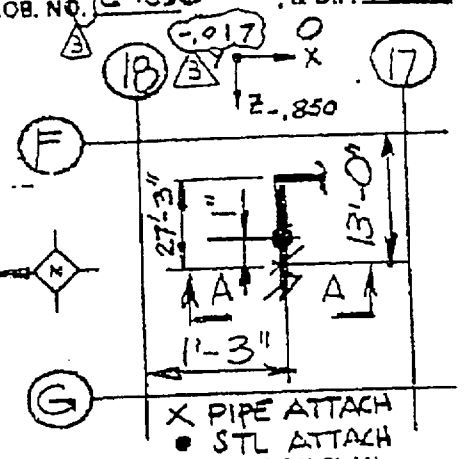

NOTE
1. HANGER
2. CODE B31.1
3. SEISMIC CATEGORY: 2

CRITICAL CLASS —

FORCE	THER. =	WT.#	±SEIS. =	~~DESIGN~~	E.W.#
FX	1-114	—	—	325#	—

* MIN. DESIGN LOAD.

HYDRO LOAD —
LOAD —
MARK NO 1-AB-028-H23

REV	DATE	REVISIONS	BY	CH'K	DES	SUPV	ENG	STRS	PROJ
3	12/4/78	ISSUED FOR FINAL STRESS CALC.	H.V.P		H.V.P				

PUBLIC SERVICE ELECTRIC AND GAS COMPANY
HOPE CREEK GENERATING STATION
DOS. 1 & 2 UNITS

BECHTEL SAN FRANCISCO

SYS ISO 1-P-AB-06 REV. 11
REF. DWGS. PIPE —
STEEL C-2015-1 REV. 11

PIPE SUPPORT REACTOR **BLDG.**
MAIN STEAM DRAINS TO CONDENSER

JOB NO.	DRAWING NO.	REV.
10855	1-P-AB-028-H23	3

ITEM NO	NO REQ'D	FIG. NO.	SIZE	DESCRIPTION	MAT'L
1	2			PIPE REINFORCING SLEEVE 6" x 9 3/4" x 1/2" THK	*
				(CUT and ROLL PER DET 1, SHT 3)	
2	2			TS 6 x 6 x 1/2 x 0'-5 7/16" LG. A501-76 OR EQ	
				(SEE DET 2, SHT 3)	
3	1			TS 8 x 8 x 1/2 x 3'-7 3/8" LG. (CUT TO SUIT)	
4	2			TS 8 x 8 x 1/2 x 1'-4" LG	
5	1			TS 8 x 8 x 1/2 x 3'-5" LG (CUT TO SUIT)	
6	3			PLATE 1/4" x 9" x 0'-9" LG	SA36
7	1			TS 6 x 6 x 1/2 x 1'-3 7/8" LG (CUT TO SUIT) A501-76 OR EQ	
				*MATERIAL AS SPECIFIED FOR PLATE IN APPLICABLE PIPING CLASS SHEET.	

STRESS PROB. NO. C-922-3Q & D.P. 274

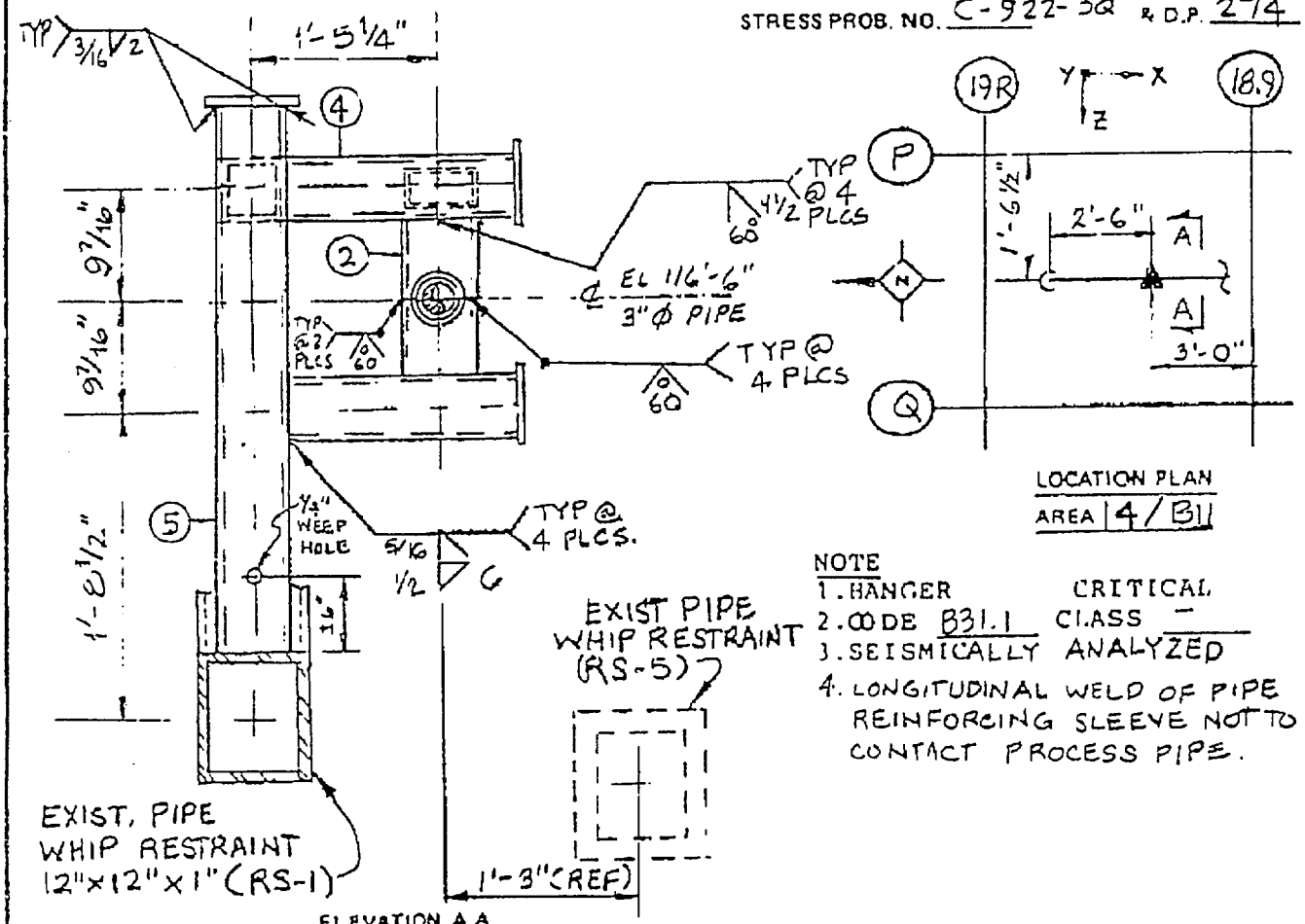

NOTE
1. HANGER CRITICAL
2. CODE B31.1 CLASS —
3. SEISMICALLY ANALYZED
4. LONGITUDINAL WELD OF PIPE REINFORCING SLEEVE NOT TO CONTACT PROCESS PIPE.

(+)

MARK NO 1-AB-028-H35

REV	DATE	REVISIONS	CIVIL	BY	CHK	DESIGN	PV	ENG	STRS	PROJ
5	[illegible]	REVISED PER REVISED HANGER GUIDANCE	—	DK	[illegible]	DK	[illegible]	[illegible]	[illegible]	

PUBLIC SERVICE ELECTRIC AND GAS COMPANY
HOPE CREEK GENERATING STATION
NOS. 1 & 2 UNITS

BECHTEL SAN FRANCISCO

SYS ISO 1-P-AB-06 REV. 10
REF. DWGS. PIPE —
STEEL C-0851-0, SHT 1 REV. 13
C-0851-0, SHT 2 REV. 12

PIPE SUPPORT REACTOR **BLDG.**

MAIN STEAM DRAINS TO CONDENSER

JOB NO.	DRAWING NO	REV
10855	1-P-AB-028-H35 SHT 1 OF 4	5

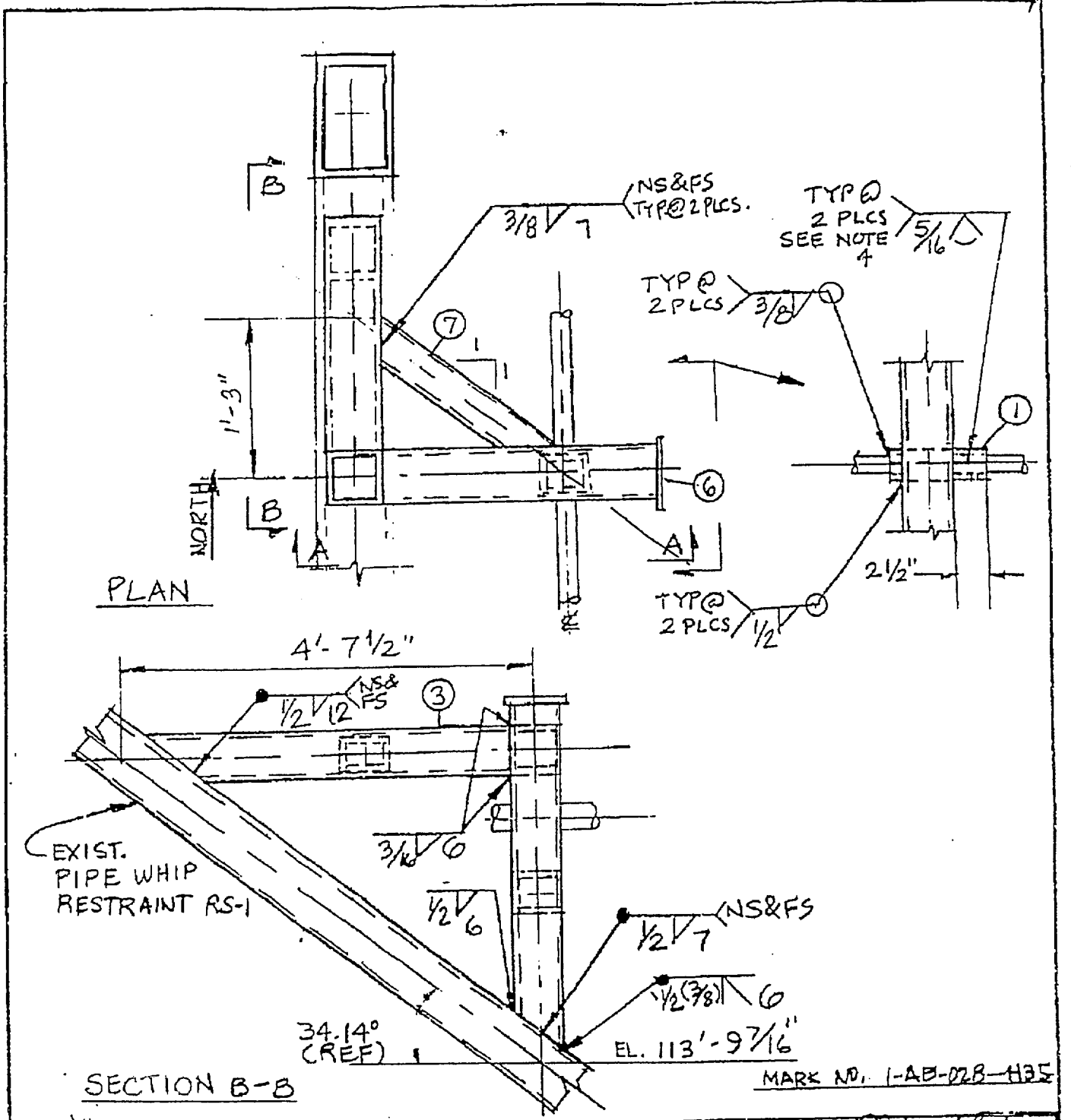

REV.	DATE	REVISIONS	CIVIL	BY	CH'K	DES	PV	ENG	STRS	PROJ
		SEE SHEET 1	—	DK		DK				

PUBLIC SERVICE ELECTRIC AND GAS COMPANY
HOPE CREEK GENERATING STATION
NOS. 1 & 2 UNITS

BECHTEL SAN FRANCISCO

REF. DWGS. ISO — PIPE — STEEL —

PIPE SUPPORT REACTOR BLDG.	JOB NO.	DRAWING NO.		REV.
MAIN STEAM DRAINS TO CONDENSER	10855	1-P-AB-028-H35 SHT 2 OF 4	Qs	5

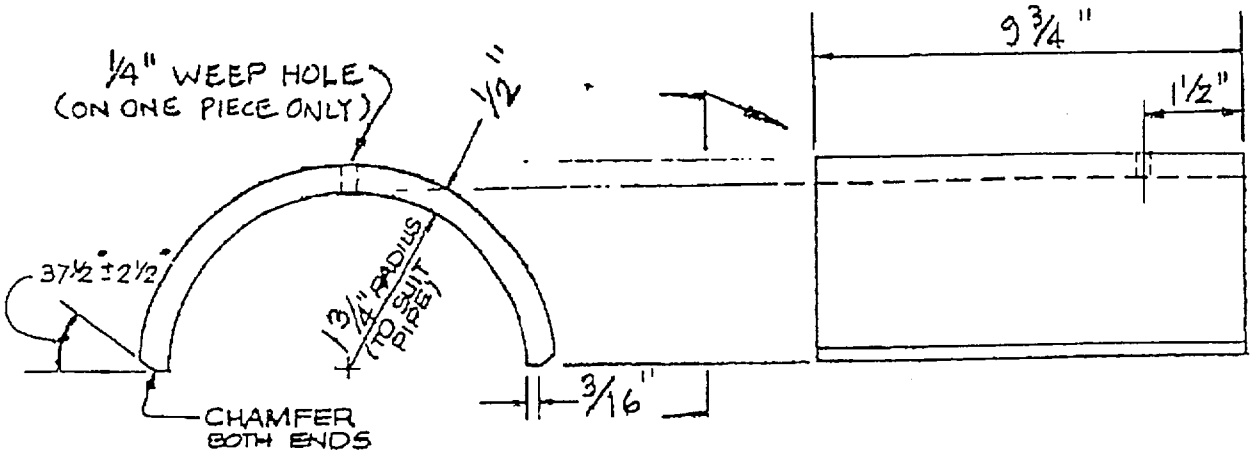

DETAIL 1

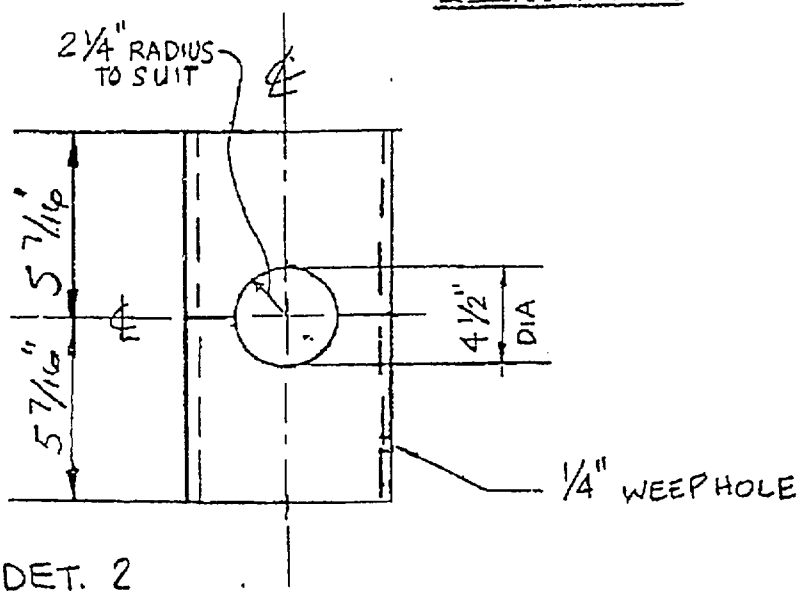

DET. 2

MARK NO. 1-AB-028-H35

REV.	DATE	REVISIONS	CIVIL	BY	CH'K	DESIGN	SUPV	ENG	STRS	PROJ
3		SEE SHEET 1	—	DK		DK				

PUBLIC SERVICE ELECTRIC AND GAS COMPANY
HOPE CREEK GENERATING STATION
NOS. 1 & 2 UNITS

BECHTEL SAN FRANCISCO

REF. DWGS. ISO — PIPE — STEEL —

PIPE SUPPORT REACTOR BLDG	JOB NO.	DRAWING NO.		REV.
MAIN STEAM DRAINS TO CONDENSER	10855	1-P-AB-028-H35 SHT 3 OF 4	Qs	5

TYPE 'B'

NOTE	TYPE OF LOAD	FORCES (LBS)			MOMENTS (FT-LBS)		
		F_x	F_y	F_z	M_x	M_y	M_z
C-922-3Q	UPSET	± 66	± 361	± 169	± 738	± 305	± 1037
	FAULTED	± 60	± 406	± 185	± 754	± 331	± 1109
	FAULTED III ±	43	341	147	788	297	965 (+)
D.P. 274							
	THERMAL						
	WEIGHT						
	SEISMIC OBE						
	SEISMIC SSE						
	TOTAL (SIDE 2)						
TOTAL (SIDE 1 + SIDE 2)							
ADD: PLASTIC LOAD (IF APPLICABLE)		F_p = 10 110 LBS			M_p = 6804 FT-LBS		

MARK NO. 1-AB-028-H35

REV.	DATE	REVISIONS	CIVIL	BY	CHK	DESIG	SUPV	ENG	STRS	PROJ
5		SEE SHEET 1	–	DK		DK			EK	

PUBLIC SERVICE ELECTRIC AND GAS COMPANY
HOPE CREEK GENERATING STATION
NOS. 1 & 2 UNITS

BECHTEL SAN FRANCISCO

REF. DWGS. SYS ISO — PIPE — STEEL —

PIPE SUPPORT REACTOR BLDG.
MAIN STEAM DRAINS TO CONDENSER

JOB NO.	DRAWING NO.		REV.
10855	1-P-AB-028-H35 SHT. 4 OF 4	QS	5

Enclosure 2

Seismic Spectra Figures

Burbank Power Plant, CA (1971 San Fernando Earthquake)

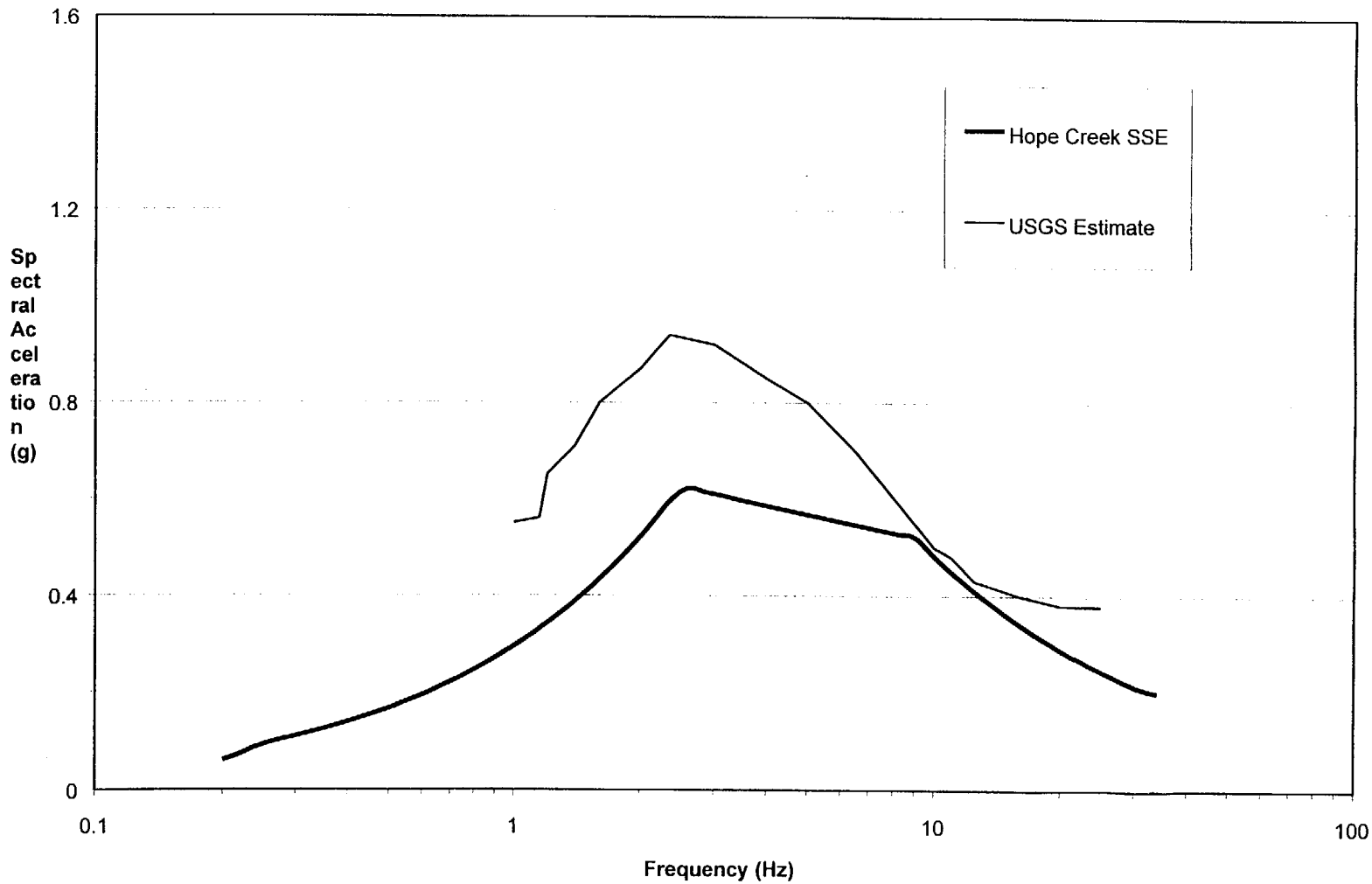

Valley Steam Plant, CA (1971 San Fernando Earthquake)

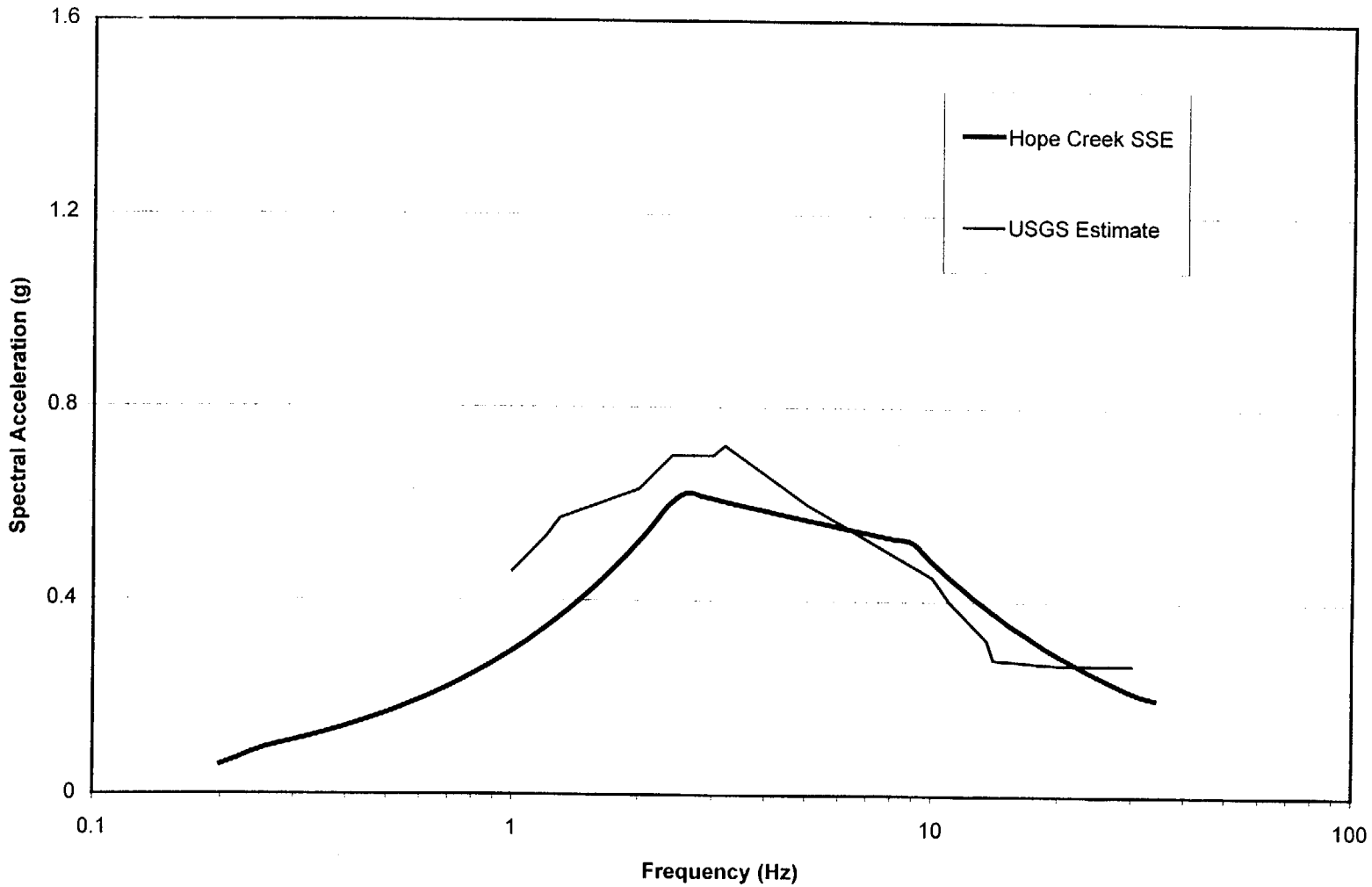

El Centro Steam Plant, CA (1979 Imperial Valley Earthquake)

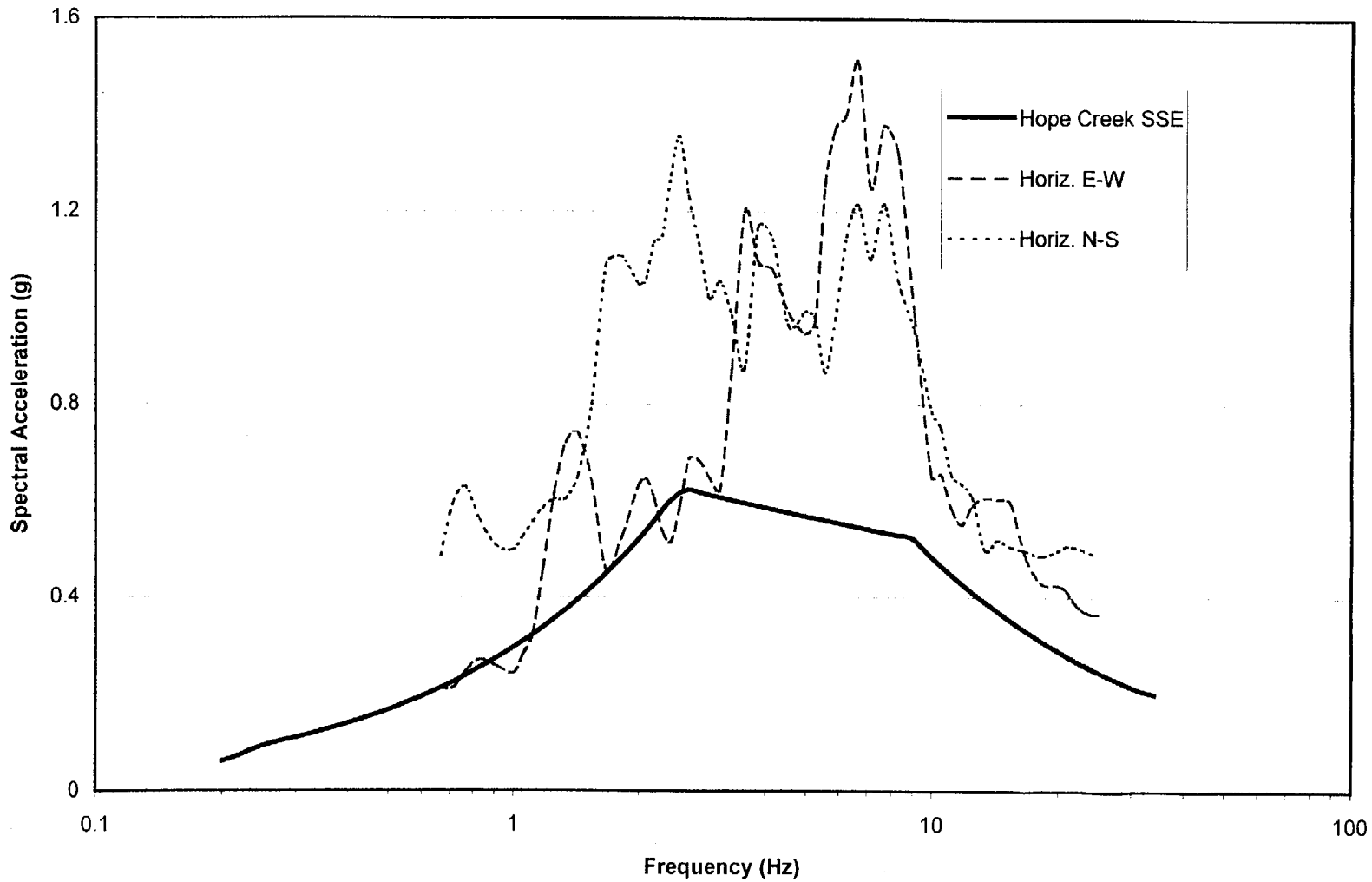

Commerce Refuge to Energy Plant, CA (1987 Whittier Narrows Earthquake)

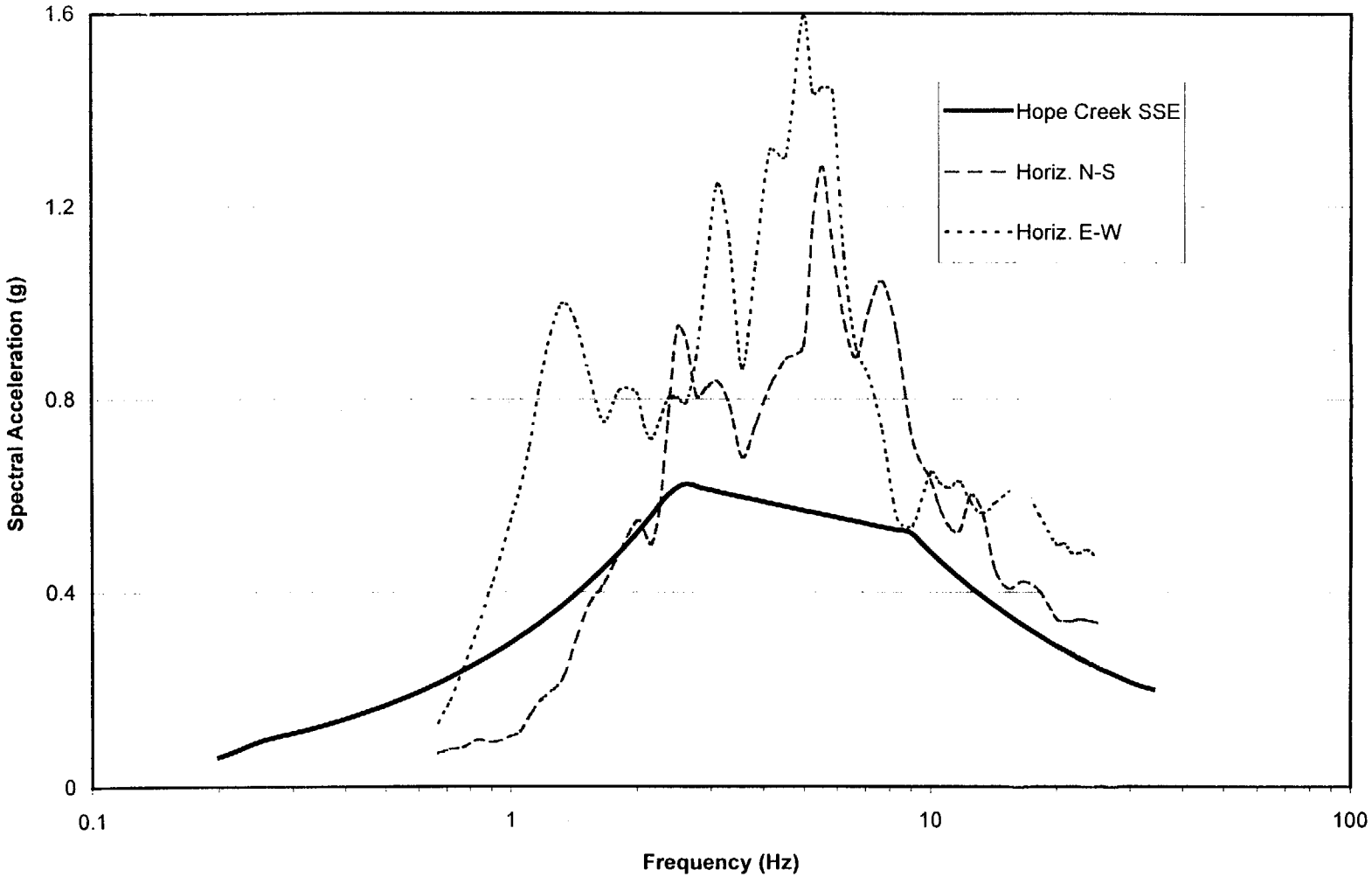

Moss Landing Power Plant, CA (1989 Loma Prieta Earthquake)

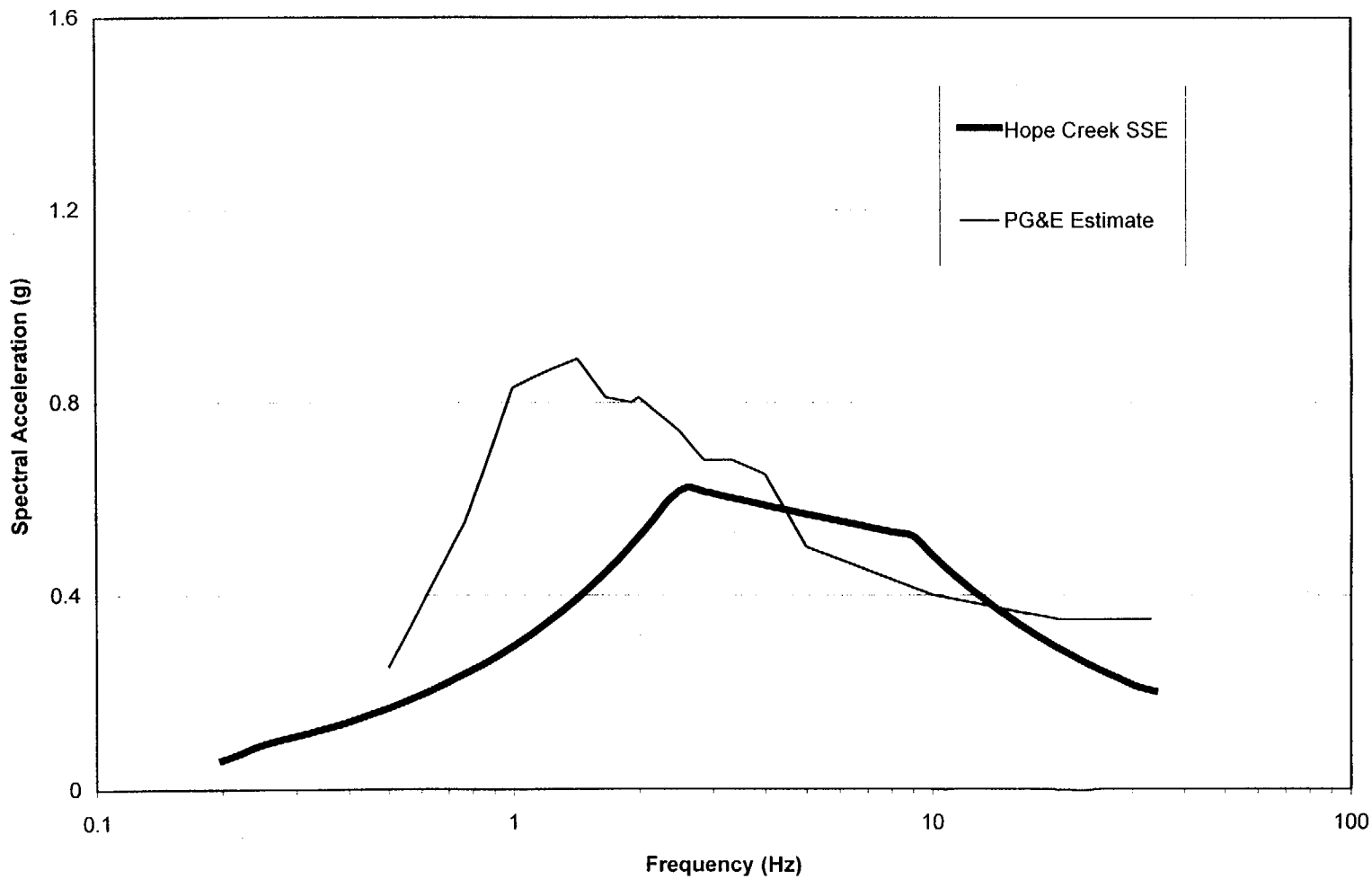

Coolwater Power Plant, CA (1992 Landers Earthquake)

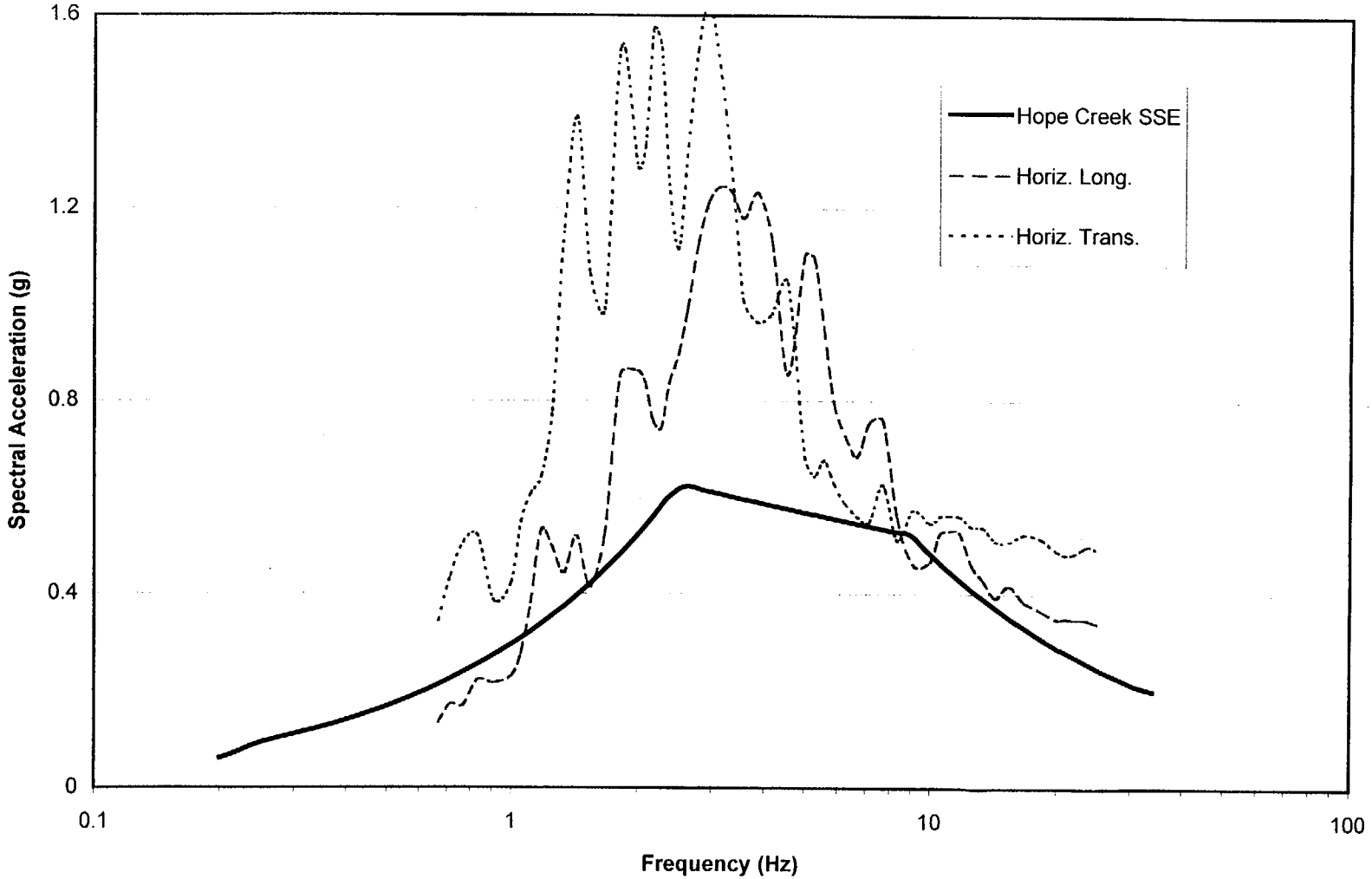

PALCO Cogeneration Plant, CA (1992 Petrolia Earthquake)

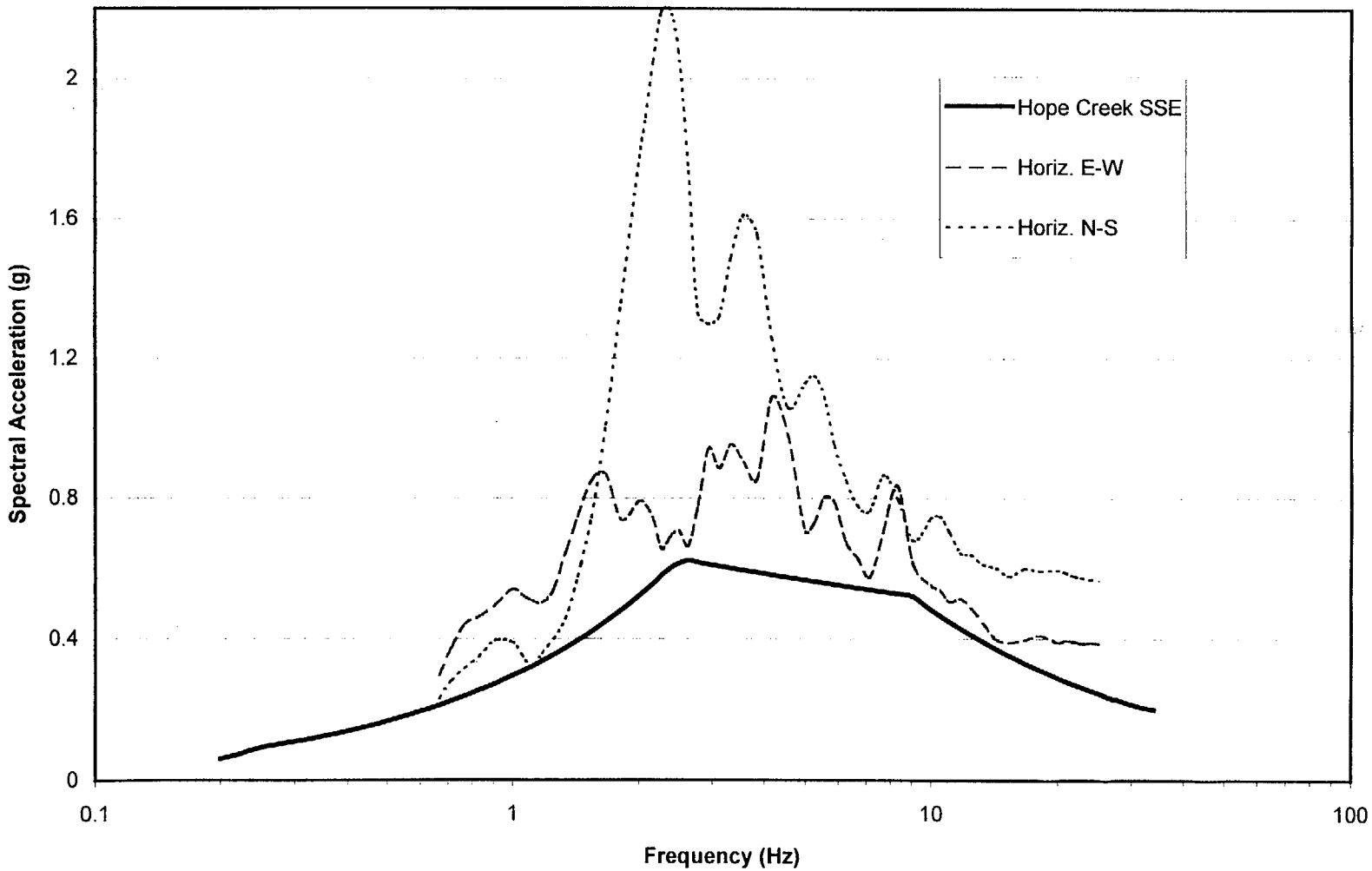

Additional Marked-Up Technical Specification Pages

TABLE 3.3.2-1 (Continued)

ISOLATION ACTUATION INSTRUMENTATION

TABLE NOTATION

This table notation identifies which valves, in an actuation group, are closed by a particular trip signal. If all valves in the group are closed by the trip signal, only the valve group number will be listed. If only certain valves in the group are closed by the trip signal, the valve group number will be listed followed by, in parentheses, a listing of which valves are closed by the trip signal.

TRIP FUNCTION	VALVES CLOSED BY SIGNAL
1. PRIMARY CONTAINMENT ISOLATION	
a. Reactor Vessel Water Level -	
1) Low Low, Level 2	~~1 (HV-5834A, HV-5835A, HV-5836A, HV-5837A)~~, 2, 8, 9, 12, 13, 14, 15 (HV-5154, HV-5155), 17, 18
2) Low Low Low, Level 1	10, 11, 15(HV-5126 A&B, HV-5152 A&B, HV-5147, HV-5148 HV-5162), 16
b. Drywell Pressure - High	~~1 (HV-5834A, HV-5835A, HV-5836A, HV-5837A)~~, 8, 9, 10, 11, 12, 13, 14, 15, 16, 17, 18
c. Reactor Building Exhaust Radiation - High	~~1 (HV-5834A, HV-5835A, HV-5836A, HV-5837A)~~, 8, 9, 12, 13, 14, 15, 17 (HV-5161), 18
d. Manual Initiation	~~1 (HV-5834A, HV-5835A, HV-5836A, HV-5837A)~~, 8, 9, 10, 11, 12, 13, 14, 15, 16, 17 (HV-5161), 18
2. SECONDARY CONTAINMENT ISOLATION	
a. Reactor Vessel Water Level - Low Low, Level 2	19
b. Drywell Pressure - High	19
c. Refueling Floor Exhaust Radiation - High	19
d. Reactor Building Exhaust Radiation - High	19
e. Manual Initiation	19

TABLE 3.3.2-1 (Continued)

ISOLATION ACTUATION INSTRUMENTATION

TABLE NOTATION

TRIP FUNCTION	VALVES CLOSED BY SIGNAL
3. MAIN STEAM LINE ISOLATION	
a. Reactor Vessel Water Level - Low Low Low, Level 1	1 (HV-F022A, B, C & D, HV-F028A, B, C & D, ~~HV-F067A, B, C & D,~~ HV-F016, HV-F019)
b. Main Steam Line Radiation - High, High	2
c. Main Steam Line Presure - Low	1 (as above)
d. Main Steam Line Flow - High	1 (as above)
e. Condenser Vacuum - Low	1 (as above)
f. Main Steam Line Tunnel Temperature - High	1 (as above)
g. Manual Initiation	1 (as above), 2, 17 (SV-J004A-1, 2, 3, 4 & 5)
4. REACTOR WATER CLEANUP SYSTEM ISOLATION	
a. RWCU Δ Flow - High	7
b. RWCU Δ Flow - High, Timer	7
c. RWCU Area Temperature - High	7

TABLE 3.6.3-1

PRIMARY CONTAINMENT ISOLATION VALVES

leakage is routed to the MSIV Leakage Treatment Path.

NOTES NOTATION

1. Main Steam Isolation Valve~~s~~ ~~are sealed with a seal system that maintains a positive pressure of 5 psig above reactor pressure~~. Leakage ~~is inleakage and~~ is not added to 0.60 La allowable leakage.*

2. Containment Isolation Valves are sealed with a water seal from the HPCI and/or RCIC system to form the long-term seal boundary of the feedwater lines. The valves are tested with water at 1.10 Pa, 52.9 psig, to ensure the seal boundary will prevent by-pass leakage. Seal boundary liquid leakage will be limited to 10 gpm.

3. Containment Isolation Valve, Type C gas test at Pa, 48.1 psig. Leakage added to entire system leakage. Allowable leakage for entire system limited to 0.60La.

4. Containment Isolation Valve, Type C water test at 1.10 Pa, 52.9 psig delta P. Leakage added to entire system leakage. Allowable leakage for entire system limited to 10 gpm.

5. Containment boundary is discharge nozzle of relief valve, leakage tested during Type A test.*

6. Drywell and suppression chamber pressure and level instrument root valves and excess flow check valves, leakage tested during Type A.*

7. Explosive shear valves (SE-V021 through SE-V025) not Type C tested.*

8. Surveillances to be performed per Specification 3.6.1.8.

9. All valve I.D. numbers are preceded by a numeral 1 which represents an Unit 1 valve.

10. The reactor vessel head seal leak detection line (penetration J5C) excess flow check valve (BB-XV-3649) is not subject to OPERABILITY testing. This valve will not be exposed to primary system pressure except under the unlikely conditions of a seal failure where it could be partially pressurized to reactor pressure. Any leakage path is restricted at the source; therefore, this valve need not be OPERABILITY tested.

11. Containment Isolation Valve(s) are not Type C tested. Containment by-pass leakage is prevented since the line terminates below the minimum water level in the suppression chamber and the system is a closed system outside Primary Containment. Refer to Specification 4.0.5.

*Exemption to Appendix J of 10 CFR Part 50.