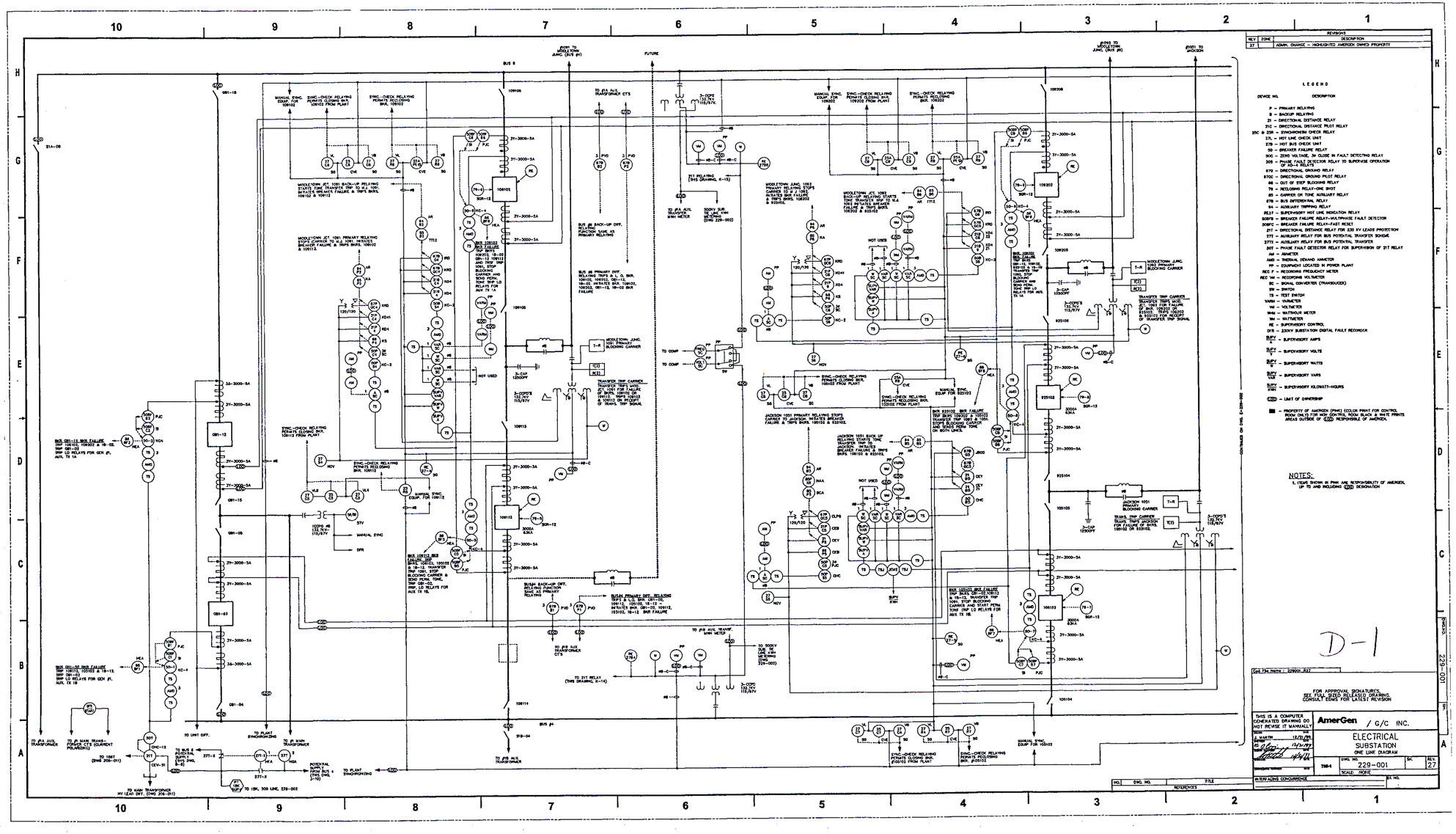

REVISIONS
REV ZONE DESCRIPTION
27 ADMIN. CHANGE - HIGHLIGHTED AMERGEN OWNED PROPERTY
LEGEND
DEVICE NO. DESCRIPTION
P - PRIMARY RELAYING
B - BACKUP RELAYING
21 - DIRECTIONAL DISTANCE RELAY
21C - DIRECTIONAL DISTANCE PILOT RELAY
25C & 25R - SYNCHRONISM CHECK RELAY
27L - HOT LINE CHECK UNIT
27B - HOT BUS CHECK UNIT
50 - BREAKER FAILURE RELAY
50Q - ZERO VOLTAGE, 3V CLOSE IN FAULT DETECTING RELAY
50S - PHASE FAULT DETECTOR RELAY TO SUPERVISE OPERATION OF KD-4 RELAYS
67D - DIRECTIONAL GROUND RELAY
67DC - DIRECTIONAL GROUND PILOT RELAY
68 - OUT OF STEP BLOCKING RELAY
79 - RECLOSING RELAY-ONE SHOT
85 - CARRIER OR TONE AUXILIARY RELAY
87B - BUS DIFFERENTIAL RELAY
94 - AUXILIARY TRIPPING RELAY
RE27 - SUPERVISORY HOT LINE INDICATION RELAY
50BFB - BREAKER FAILURE RELAY-MULTIPHASE FAULT DETECTOR
50BFC - BREAKER FAILURE RELAY-FAST RESET
21T - DIRECTIONAL DISTANCE RELAY FOR 230 KV LEADS PROTECTION
27T - AUXILIARY RELAY FOR BUS POTENTIAL TRANSFER SCHEME
27TT - AUXILIARY RELAY FOR BUS POTENTIAL TRANSFER
50T - PHASE FAULT DETECTOR RELAY FOR SUPERVISION OF 21T RELAY
AM - AMMETER
AMD - THERMAL DEMAND AMMETER
PP - EQUIPMENT LOCATED IN POWER PLANT
REC F - RECORDING FREQUENCY METER
REC VM - RECORDING VOLTMETER
SC - SIGNAL CONVERTER (TRANSDUCER)
SW - SWITCH
TS - TEST SWITCH
VARM - VARMETER
VM - VOLTMETER
WHM - WATTHOUR METER
WM - WATTMETER
RE - SUPERVISORY CONTROL
DFR - 230KV SUBSTATION DIGITAL FAULT RECORDER
SUPV A - SUPERVISORY AMPS
SUPV V - SUPERVISORY VOLTS
SUPV W - SUPERVISORY WATTS
SUPV VAR - SUPERVISORY VARS
SUPV KWH - SUPERVISORY KILOWATT-HOURS
LIMIT OF OWNERSHIP
PROPERTY OF AMERGEN (PINK) (COLOR PRINT FOR CONTROL ROOM ONLY) FOR NON CONTROL ROOM BLACK & WHITE PRINTS AREAS OUTSIDE OF LOO RESPONSIBLE OF AMERGEN.
NOTES:
1. ITEMS SHOWN IN PINK ARE RESPONSIBILITY OF AMERGEN, UP TO AND INCLUDING LOO DESIGNATION
D-1
Cad File Name : 229001.R27
FOR APPROVAL SIGNATURES, SEE FULL SIZED RELEASED DRAWING. CONSULT EDMS FOR LATEST REVISION
THIS IS A COMPUTER GENERATED DRAWING DO NOT REVISE IT MANUALLY
J. MARTIN 12/31/99
AmerGen / G/C INC.
ELECTRICAL SUBSTATION ONE LINE DIAGRAM
TMI-1
DWG. NO. 229-001
SH. REV. 27
SCALE NONE
INTERFACING CONCURRENCE
NO. DWG. NO. TITLE
REFERENCES
229-001