May 15, 2000

MEMORANDUM TO: Suzanne C. Black, Deputy Director
Division of Licensing and Project Management, NRR

FROM: John A. Grobe, Director, DRS /***RA***/

SUBJECT: REQUEST FOR TECHNICAL ASSISTANCE TIA NO. 2000-06

As discussed in NRC Inspection Report 50-315/50-316/99021, the D.C. Cook essential service water (ESW) system safety analysis modeled the ESW system with two ESW pumps supplying cooling water to a single cross connected system header. The plant has two separate ESW headers, each header has two ESW pumps, a Unit 1 pump and a Unit 2 pump. Based on this configuration, an ESW pump located in the opposite unit would be required to meet the design basis safety analysis. For example, an ESW pump on the Unit 1 side of the ESW header would be required to support Unit 2's ability to meet the design basis safety analysis flow requirements. This configuration is consistent with Section 9.8.3.2 of the UFSAR, which stated that two ESW pumps are sufficient to supply all service water requirements for unit operation, shutdown, refueling, or post accident operation. Technical Specification (TS) 3.7.4.1.a required at least two independent ESW loops to be operable, but was not specific about what constituted an operable ESW loop. The inspectors questioned if the flowpath from the opposite unit ESW pumps was required to be operable to support ESW system operability. Because TS 3.7.4.1 applies only to Modes 1 through 4, it had been the licensee's past practice to remove ESW pumps from service in a shutdown unit without entering the limiting condition for operation (LCO) for ESW operability on the other operating unit. Pending review of the ESW system licensing basis and operational requirements, the inspectors opened an Unresolved Item (URI) 50-315/316/99021-02(DRP).

The licensee subsequently conducted extensive testing and evaluation of the ESW system to evaluate the capabilities and design requirements of the system. The licensee completed the evaluation on May 1, 2000, and plans to issue administrative controls to allow the closing of ESW header cross tie valves to isolate an inoperable ESW pump. The licensee currently plans to restart Unit 2 with only the Unit 2 ESW pumps operable, on the basis that Unit 1 pumps are not required though they are connected to a common header. The licensee intends to use NRC Administrative Letter 98-10, "Dispositioning of Technical Specifications That Are Insufficient to Assure Plant Safety," guidance and issue an Administrative Technical requirement to provide interim guidance governing control of the ESW cross tie valves until a

CONTACT: Anton Vegel, DRP
(630)829-9820

DOCUMENT NAME: G:\TIA\TIA ESW.wpd
To receive a copy of this document, indicate in the box "C" = Copy w/o att/encl "E" = Copy w/att/encl "N" = No copy

OFFICE	RIII		RIII					
NAME	Vegel/trn		Grobe					
DATE	05/10 /00		05/15 /00					

OFFICIAL RECORD COPY

Technical Specification amendment can be issued. Administrative Letter 98-10 states that imposing administrative controls for improper or inadequate TSs considered an acceptable short-term corrective action, but that the NRC expects that a TS amendment would be submitted in a timely fashion. The inspectors noted that the current licensee schedule date for issuance of a TS amendment to address TS 3.7.4.1 is November 22, 2001 (see Corrective Action 3 of CR 99-17580). The inspectors concluded that deferral of issuance of a TS amendment clarifying TS 3.7.4.1 requirements to November 2001 would not be consistent with Administrative Letter 98-10 guidance for short-term corrective action. In addition, Administrative Letter 98-10 states that the discovery of an improper or inadequate TS value or required action is considered a degraded or nonconforming condition as defined in Generic Letter (GL) 91-18. GL 91-18, Revision 1, states that in accordance with 10 CFR 50.59, should the evaluation [of compensatory measures] determine that implementation of the compensatory action itself would involve a TS change or an unreviewed safety question (USQ), NRC approval is required prior to the implementation of the compensatory action.

The licensee performed a 10 CFR 50.59 safety screening for these administrative controls and concluded that the controls do not represent a USQ.

The Resident Inspectors performed an independent review of this issue and have concluded that closing the ESW cross tie valves to isolate an inoperable ESW pump constitutes a USQ. Consequently, under GL 91-18, the licensee would require NRC review and approval of these administrative controls prior to their implementation.

The inspectors' basis for this USQ determination is the following:

- The administrative control of ATR 1(2)-ESW-1 could allow a reduction in the number of ESW pumps available to mitigate design basis accidents below the number assumed in the UFSAR. Therefore, this reduction in system redundancy and overall capability represents an increase in the probability of malfunction of equipment important to safety (i.e. the ESW system). The reduction in flow capability could result in the inability to provide sufficient cooling flow to non-accident heat loads, such as the spent fuel pool.

- The licensee's administrative controls will rely on a single ESW pump to deliver the minimum required ESW flow to a unit during a design basis accident. Previous analyses described in the UFSAR relied on a minimum of two ESW pumps to mitigate design basis accidents. Furthermore, the previous ESW safety analysis relied on two cross-tied pumps (a unit 1 and a unit 2 pump) to meet required cooling water flowrates. The licensee's revised ESW safety analysis methodology resulted in a more restrictive ESW pump operability limit for pump differential pressure and required a higher minimum flow capability under accident conditions. Additionally, the licensee's revised analysis did not consider ESW flow requirements associated with non-accident heat loads, such as spent fuel pool cooling. This result demonstrated a reduction in system capability and represents a decrease in the margin of safety described in licensing basis documents.

I am requesting technical assistance in evaluating the following aspects of this issue:

1) What is the appropriate application of GL 91-18 and Administrative Letter 98-10 regarding this issue?

2) What is the appropriate application of the USQ criteria in 10 CFR 50.59 to the licensee's compensatory actions for closing the ESW crosstie valves?

This request was discussed with Singh Bajwa on May 9, 1999. We request a response as soon as practical recognizing the restart of D. C. Cook Unit 2 is scheduled for later this month. We are prepared to support a meeting in headquarters between the D. C. Cook resident inspectors and NRR technical staff at your earliest convenience to ensure a clear understanding of this complex issue. Attached for your consideration is additional background information regarding this issue, including the Resident Inspectors assessment of this issue. Please coordinate your review of this issue closely with Mr. A. Vegel of the Region III staff.

Attachment: As Stated

cc w/att: J. Zwolinski, NRR
S. Bajwa, NRR
C. Craig, NRR
J. Stang, NRR
A. Vegel, RIII
B. Bartlett, RIII
K. Coyne, RIII
G. Shear, RIII

Attachment

Additional Background Information

Unreviewed Safety Question (USQ) for Essential Service Water (ESW)

Executive Summary

The licensee plans to issue administrative controls to allow the closing of ESW header cross tie valves to isolate an inoperable ESW pump. The licensee intends to use NRC Administrative Letter 98-10, "Dispositioning of Technical Specifications That Are Insufficient to Assure Plant Safety," guidance and issue an Administrative Technical requirement to provide interim guidance governing control of the ESW cross tie valves until a Technical Specification (TS) amendment can be issued. Admin Letter 98-10 states that imposing administrative controls for improper or inadequate TS is considered an acceptable short-term corrective action, but that the NRC expects that a TS amendment would be submitted in a timely fashion. The inspectors noted that the current licensee schedule date for issuance of a TS amendment to address TS 3.7.4.1 is November 22, 2001 (see Corrective Action 3 of CR 99-17580). The inspectors concluded that deferral of issuance of a TS amendment clarifying TS 3.7.4.1 requirements to November 2001 would not be consistent with Admin Letter 98-10 guidance for short-term corrective action.

The licensee performed a 10 CFR 50.59 safety screening for these administrative controls and concluded that the controls do not represent an USQ. The inspectors performed an independent review of this issue and have concluded that closing the ESW cross tie valves to isolate an inoperable ESW pump constitutes an USQ. The inspectors note that the existence of an USQ does not necessarily mean that shutting the cross tie valves has a detrimental impact on plant safety. However, the licensee would require NRC review and approval of these administrative controls prior to their implementation.

10 CFR 50.59, "Changes, tests and experiments," stated that a proposed change, test or experiment shall be deemed to involve an USQ if:

> (i) the probability of occurrence or the consequences of an accident or malfunction of equipment important to safety previously evaluated in the safety analysis report may be increased,
>
> (ii) a possibility for an accident or malfunction of a different type than any evaluated previously in the safety analysis report may be created, or
>
> (iii) the margin of safety as defined in the basis for any TS is reduced.

The inspectors' basis for this USQ determination is the following:

- The administrative control of ATR 1(2)-ESW-1 could allow a reduction in the number of ESW pumps available to mitigate design basis accidents below the number assumed in the UFSAR. Therefore, this reduction in system redundancy and overall capability represents an increase in the probability of malfunction of equipment important to safety (i.e. the ESW system). The reduction in flow capability could result in the inability to provide sufficient cooling flow to non-accident heat loads, such as the spent fuel pool.

Attachment

Additional Background Information

- The licensee's administrative controls will rely on a single ESW pump to deliver the minimum required ESW flow to a unit during a design basis accident. Previous analyses described in the UFSAR relied on a minimum of two ESW pumps to mitigate design basis accidents. Furthermore, the previous ESW safety analysis relied on two cross-tied pumps (a Unit 1 and a Unit 2 pump) to meet required cooling water flowrates. The licensee's revised ESW safety analysis methodology resulted in a more restrictive ESW pump operability limit for pump differential pressure and required a higher minimum flow capability under accident conditions. Additionally, the licensee's revised analysis did not consider ESW flow requirements associated with non-accident heat loads, such as spent fuel pool cooling. This result demonstrated a reduction in system capability and represents a decrease in the margin of safety described in licensing basis documents.

A. Introduction

As discussed in NRC Inspection Report 50-315/50-316/99021, the ESW system safety analysis modeled the ESW system with two ESW pumps supplying cooling water to a single cross connected system header. Based on this configuration, an ESW pump located in the opposite unit would be required to meet the design basis safety analysis. This configuration is consistent with Section 9.8.3.2 of the UFSAR, which stated that two ESW pumps are sufficient to supply all service water requirements for unit operation, shutdown, refueling, or post accident operation. TS 3.7.4.1.a required at least two independent ESW loops to be operable, but was not specific about what constituted an operable ESW loop. The inspectors questioned if the flowpath from the opposite unit ESW pumps was required to be operable to support ESW system operability. Because TS 3.7.4.1 applies only to Modes 1 through 4, it had been the licensee's past practice to remove ESW pumps from service in a shutdown unit without entering the limiting condition for operation (LCO) for ESW operability on the other operating unit. Pending further review of the ESW system licensing basis and operational requirements, the inspectors opened Unresolved Item (URI) 50-315/316/99021-02 (DRP).

Attachment

Additional Background Information

B. System Description

The ESW system at D. C. Cook consists of two independent headers, with each header served by two essential service water pumps. Each independent header serves both units, and is supplied by a Unit 1 pump and a Unit 2 pump. A simplified sketch of the ESW system is shown below:

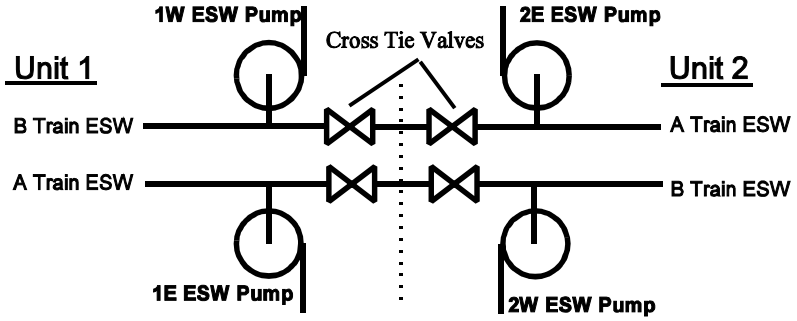

C. Licensee's Planned Resolution of the ESW Cross Tie Issue

The licensee has concluded that weaknesses exist in the current TS 3.7.4.1 requirements. Specifically, TS controls for the ESW system with one or two pumps inoperable in a shutdown unit with the other unit operating do not ensure that sufficient ESW flow can be delivered to the operating unit in the event of an accident. The licensee has concluded that the failure to shut the ESW header cross ties to isolate an inoperable ESW pump in the shutdown unit could result in diversion of ESW flow from an accident unit and therefore the inability to meet required safety analysis assumptions. The licensee intends to use NRC Administrative Letter 98-10, "Dispositioning of Technical Specifications That Are Insufficient to Assure Plant Safety," guidance and issue an Administrative Technical requirement to provide interim guidance governing control of the ESW cross tie valves until a TS amendment can be issued.

The inspectors reviewed the licensee's Administrative Technical Requirement (ATR) 1(2)-ESW-1, "Essential Service Water System" and the associated 10 CFR 50.59 screening evaluation. The ATR was approved by the Plant Operating Review Committee during a meeting held on May 1, 2000. ATR 1(2)-ESW-1 was intended to address potential non-conservatisms associated with TS 3.7.4.1 regarding the OPERABILITY of remote unit ESW pumps.

ATR 1(2)-ESW-1 will allow the ESW system to be operated in the following configurations:

1. Two ESW headers each with an OPERABLE Unit 1 and a Unit 2 ESW pump and the associated cross tie valves open

Attachment

Additional Background Information

2. One ESW header with an OPERABLE Unit 1 and a Unit 2 ESW pump and the associated cross tie valves open and a second ESW header with a local unit ESW pump OPERABLE and at least one of the two cross tie valves shut. This configuration allows one ESW pump in the opposite unit to be inoperable

3. Two ESW headers each consisting of an OPERABLE local ESW pump and at least one of the two header cross tie valves shut in each ESW header. This configuration would allow both of the opposite unit ESW pumps to be inoperable.

This ATR would apply in Modes 1 through 4. Additionally, similar to TS 3.7.4.1.b, the ATR includes provisions for ensuring the availability of an ESW flow path from the opposite unit for Appendix R considerations.

The licensee performed a 10 CFR 50.59 evaluation of the ATR and concluded that ATR 1(2)-ESW-1 did not represent an USQ.

The inspectors reviewed the proposed ATR against the 10 CFR 50.59 definition of an USQ. The inspectors considered industry and NRC guidance for the performance of 10 CFR 50.59 safety evaluations during this review.

D. <u>Comparison of ESW Cross Tie Administrative Controls to USQ Criteria</u>

The inspectors determined the limiting case for ATR 1(2)-ESW-1 to be one unit at power (Mode 1) and the other unit defueled. This condition could result in the minimum number of ESW pumps available to mitigate an accident (i.e. both ESW pumps in the defueled unit removed from service). When both opposite unit ESW pumps are unavailable, the operating unit would enter an Appendix R, “Fire Protection Program,” limiting condition for operation(LCO). The LCO associated with TS 3.7.4.1.b allows continued operation for up to sixty days with appropriate compensatory measures established (e.g. fire watches).

Because TS 3.7.4.1 and ATR 1(2)-ESW-1 apply only in Modes 1 through 4, it would be possible for a Mode 5, 6 or defueled unit to place two ESW pumps in an inoperable status. However, in a Mode 5 or 6 unit, other TS requirements (such as residual heat removal system and emergency diesel generator OPERABILITY requirements) would require the licensee to maintain the ESW system in the shutdown unit available to support TS required systems.

Attachment

Additional Background Information

USQ Determination

The inspectors reviewed the effect of continued operation under this ESW configuration against each of the USQ criteria to determine if the ATR represented an USQ. The results and basis for the inspectors' evaluation is shown below:

1. The probability of occurrence or the consequences of an accident or malfunction of equipment important to safety previously evaluated in the safety analysis report may be increased,

The inspectors concluded that the change represented an increase in the probability of malfunction of equipment important to safety (i.e. the ESW system) that was previously evaluated in the UFSAR. This conclusion was based upon application of the single failure criteria to the minimum ESW pump configuration allowed by ATR 1(2)-ESW-1 and the impact on non-accident related cooling loads (e.g. spent fuel pool cooling). The basis for this conclusion is as follows:

a. Impact of Single Failure on ESW System

The inspectors concluded that removing both ESW pumps from service in a defueled unit (as allowed by ATR 1(2)-ESW-1) could result in the inability to meet UFSAR minimum ESW pump operability assumptions. Specifically, this condition could result in only two OPERABLE pumps available to support station heat sink requirements. Application of a single active failure during a design basis accident (e.g. loss of a diesel generator with a concurrent loss of offsite power or failure of an OPERABLE ESW pump) would result in a single ESW pump providing cooling flow to both units. The NRC's SER and the UFSAR credit two ESW pumps for mitigation of a design basis accident. The reduction from two ESW pumps to one ESW pump during a design basis accident would represent an increase in the malfunction of equipment important to safety previously evaluated in the UFSAR.

i. NRC Safety Evaluation Report (SER)

The SER stated that a minimum of two ESW pumps are required to mitigate design basis accidents, assuming application of a single failure. Section 9.5, "Essential Service Water," for the NRC Safety Evaluation Report for the issuance of the operating license (dated 9/10/73), stated:

- The system consists of four pumps (two required) so arranged on two headers with suitable isolation provisions, that a pipe rupture or the failure of any active component will not jeopardize the safety function.

Additional Background Information

- The essential service water system is a category I system shared by both units.

ii. Updated Final Safety Analysis Report Assumptions/Analysis

The UFSAR stated that a minimum of two ESW pumps would be available to mitigate a design basis accident. This is consistent with the NRC's SER and previous analyses performed by the licensee.

The inspectors reviewed the UFSAR and concluded that the UFSAR does not address conditions that result in less than two ESW pumps available to mitigate an accident. This conclusion is based on the following UFSAR references:

a. Section 9.8.3, "Service Water Systems"

- Section 9.8.3.2: The two headers are arranged such that a rupture in either header will not jeopardize the safety functions of the system. Each header is served by two essential service water pumps. Two pumps are sufficient to supply all service water requirements *[emphasis added]* for unit operation, shutdown, refueling or post accident operation, including a LOCA on one unit and a simultaneous hot shutdown in the other. However, a third pump is normally started under the shutdown and refueling operations. All pumps receive a start signal in the event of an accident.

- Section 9.8.3.3: The headers are arranged such that even loss of a complete header does not jeopardize plant safety related functions. Table 9.8-6 gives a malfunction analysis of a pump valve and strainer.

b. Table 9.8-6, "Essential Service Water System Malfunction Analysis"

- Rupture of an essential service water pump casing: Specified actions are isolate pump and start a redundant pump. The table states that minimum requirements need only three out of four pumps *[emphasis added].*

Additional Background Information

- Essential service water pump fails to start: UFSAR states that <u>one operating pump</u> will supply sufficient flow for <u>one operating unit</u>. Redundancy is sufficient to provide ample flow for any condition *[emphasis added].*

c. Table 6.2-6, "Single Active Failure Analysis Emergency Core Cooling System - Injection Phase"

- Essential Service Water pump fails to start: UFSAR states that <u>four provided for both units</u>. These pumps are running during normal operation *[emphasis added]*.

iii. <u>Consideration of Single Failure During Appendix R Entry into Appendix R Limiting for Condition for Operation</u>

The inspectors considered the impact of entry into an Appendix R limiting condition upon the need for the licensee to consider a single failure of the operating unit's ESW pumps. Although entry into a TS LCO would generally obviate the need to consider additional single active failures, the inspectors concluded that an additional single failure should be considered in this case. This conclusion was based upon the following:

- The relatively long allowed outage time allowed under the Appendix R fire protection TS (sixty days). With appropriate compensatory measures established, the licensee could operate the plant for up to sixty days with no ESW flowpath available from the defueled unit. This allowed outage (AOT) is significantly greater than the AOT associated with loss of an OPERABLE ESW loop (72 hours) and represents a non-trivial portion of an eighteen month operating cycle.

- Entry into the Appendix R LCO should not impact the OPERABILITY assumptions made in the ESW design basis accident safety analysis. In effect, credit for a single failure is already taken by the assumption that establishment of compensatory measures precludes initiation of an Appendix R fire. Therefore, it would be inappropriate to conclude that entry into an Appendix R TS LCO also precludes any other additional single failure during a design basis accident.

Additional Background Information

- Under an Appendix R TS LCO, the inoperable equipment is located in the defueled unit. Loss of equipment in the defueled unit should not mitigate the need to consider single failures in an operating unit under accident conditions. The Appendix R TS LCO is entered due to a condition on the defueled unit, not the on-line unit; therefore, by giving credit for this LCO, any Appendix R equipment removal on the defueled unit effectively makes the on-line unit one hundred percent reliable.

b. <u>Impact on Shutdown (i.e. Non-Accident) and Spent Fuel Pool Cooling</u>

The licensee has stated that they have completed a calculation (02-MD-ESW-75-N) which shows that one ESW pump is capable of providing sufficient cooling flow to mitigate a LOCA in the operating unit. The inspectors have not reviewed this calculation in sufficient detail to concur with this evaluation. Not withstanding the capability of a single ESW to mitigate an accident in a single unit, the ESW system must still provide cooling capability to non-accident related heat loads (e.g. spent fuel pool cooling, residual heat removal in the non-accident unit, or full power loads in an operating, non-accident unit).

Under the minimum pump configuration allowed by ATR 1(2)-ESW-1 and assuming a single active failure, insufficient flow would be available to support spent fuel pool cooling. The UFSAR describes failures of spent fuel pool cooling, but the second available spent fuel pool cooling train is credited for mitigating these malfunctions. In effect, operation with a single ESW pump during a design basis accident results in a common mode failure of spent fuel pool cooling (due to loss of heat sink). The basis for this conclusion is as follows:

- UFSAR Table 9.5-2, “Component Cooling Water System Minimum Flow Requirements per Train (GPM)” stated that cooling to the spent fuel pool heat exchangers is assumed to be on the non-accident unit.

- UFSAR Table 9.4-3, “Spent Fuel Pool Cooling System Malfunction Analysis,” considers the failure of a single train of spent fuel pool cooling (e.g. rupture of one SFP cooling pump casing, a single SFP pump stops running, rupture of one heat exchanger) but relies on the availability of the second train to mitigate the malfunction.

- UFSAR Section 9.4.2, “Spent Fuel Pool Cooling System,” stated that assuming that all cooling is lost to the spent fuel pool with

Attachment

Additional Background Information

3420 spent fuel assemblies stored with one complete core offload, the time to pool boiling is 5.74 hours assuming an initial pool temperature of 144°F.

2. <u>Possibility for an accident or malfunction of a different type than any evaluated previously in the safety analysis report may be created, or</u>

The inspectors concluded that this criteria would not be impacted by the licensee's proposed action to close ESW cross tie valves. The increased possibility of a loss of essential service water cooling would be captured by the reduced redundancy for the ESW system and increased vulnerability to a single failure. This issue was discussed in the previous section.

3. <u>The margin of safety as defined in the basis for any TS is reduced.</u>

The bases for TS 3.7.4.1.a state: The operability of the essential service water system ensures that sufficient cooling capacity is available for continued operation of safety related equipment during normal and accident conditions. The redundant capacity of this system, assuming a single failure, is consistent with the assumptions used in the accident conditions within acceptable limits.

The inspectors determined that the TS bases are not specific about the margin available for the ESW system, but does address the single failure capability of the system during accident conditions. Upon review of NRC and industry guidance, the inspectors determined that other licensing basis documents could be reviewed to determine if this USQ criteria was met. For example:

- NSAC-125, Section 3.8, "Margin of Safety as Defined in the Basis of Any Technical Specification," stated that if the TS bases do not specifically address a margin of safety, then the licensee's safety analysis report (SAR), the NRC's safety evaluation report (SER), and appropriate other licensing basis documents should be reviewed to determine if the proposed change would result in a reduction in a margin of safety.

In order to demonstrate that a single ESW pump was capable of meeting design basis minimum required flows for one accident unit, the licensee clarified the equipment required for an ESW "train" and revised the ESW system analysis methodology. The inspectors were informed by the Director, Design Engineering on May 2, 2000, that the revised calculation is still under review and there may be questions concerning a lack of conservatism in some assumptions.

Attachment

Additional Background Information

Despite this possible lack of conservatism, the revised analysis indicates that the available margin in pump performance has been reduced. The basis for this determination is as follows:

a. Definition of an ESW "Train"

Several licensing documents use differing terminology relating to the definition of what would normally be considered a "train" of ESW. For example, the TS and the normal operating procedure refer to ESW "loops," while the UFSAR refers to "headers." In order to determine what equipment constituted a "loop" in reference to the TS, the inspectors reviewed a number of licensing basis documents. Based on a review of the licensee's Probabilistic Risk Analysis, engineered safeguards features actuation circuitry, operating procedures and previous ESW system safety analysis, the inspectors concluded that an ESW train is comprised of a cross-tied ESW header supplied by two ESW pumps (i.e. one pump from each unit). The basis for this conclusion is:

- The Safety Injection start signal circuitry is arranged such that both pumps on the common ESW header are started upon the receipt of the associated train SI actuation signal. For example, upon actuation of a Unit 2 train B safety injection signal, the 2W and the 1E ESW pumps will receive a start signal. These pumps are connected to a common ESW header and would supply cooling flow to Unit 2 train B ECCS components. This circuitry arrangement implies that, for the purposes of an engineered safeguards actuation, a "train" of ESW is two ESW pumps connected to a common ESW header.

- UFSAR Section 1.3.9, "Shared Facilities and Equipment," identifies that four essential service water pumps are shared between units. The interpretation of a "train" of ESW as a cross-tied header with a Unit 1 and a Unit 2 ESW pump is consistent with ESW sharing between units.

- The previous calculation of record for the ESW system, calculation NEMP940921AF, Revision 1, "CCW [component cooling water] Hx [heat exchanger] Flow Multiplier," assumed an ESW configuration consisting of a Unit 1 and a Unit 2 ESW pump supplying a cross-tied header.

- Procedural Guidance contained in the system normal operating procedure (12-OHP 4021.019.001, "Operation of the Essential Service Water System"), the abnormal operating procedure (02-OHP-4022.0019.001, "ESW System Rupture"), and the system annunciator response procedures (ARP) indicated that the ESW system is normally operated in a cross-tied configuration.

Attachment

Additional Background Information

Shutting of system cross-tie valves is only addressed when removing an ESW loop from service or in the event of a system piping rupture. Additionally, several ARPs credit the availability of an opposite unit ESW pump in the event of failure of the local unit's ESW pump.

b. <u>Change in ESW System Analysis Assumptions</u>

The inspectors noted that the licensees revised ESW system analysis (02-MD-ESW-75-N) included the following assumptions that differ from the previous system analysis (NEMP940921AF, Revision 1):

- ESW flow loads from the non-accident unit are not considered (e.g. spent fuel pool, residual heat removal or normal operation loads in opposite unit, etc.)
- The revised analysis used a single ESW pump vice two ESW pumps
- The flow balance model was "tuned" to match the ESW flow balance results

Although the use of a single pump may represent a more conservative condition and judicious adjustment of the model to match actual flow balance results may be appropriate, the exclusion of non-accident flow loads in the analysis may not bound expected accident conditions.

c. <u>Administrative Controls Result in Higher ESW Pump Minimum Operability Limits and Higher Required Pump Flowrates</u>

Design Information Transmittal B-00760-01, "Design Basis Performance Parameters for the Essential Service Water Pumps," transmitted revised ESW pump minimum operability limits for quarterly inservice testing based on calculation MD-02-ESW-075-N. In order to ensure that design requirements are met, the quarterly inservice test low action limit must be established no lower than the minimum operability limit, even though the ASME code may allow a lower low action limit (see NRC Information Notice 97-90 and NUREG-1482). The licensee performed calculation MD-02-ESW-075-N in order to demonstrate the capability of a single ESW pump in a split (i.e. cross tie valves shut) header to meet the required minimum service water accident requirements. The revised minimum operability limit recommended by the DIT was 62 psid at a flow rate of 9200 gpm.

The revised methodology resulted in a more restrictive ESW pump operability limit for pump differential pressure and required a higher

minimum flow capability under accident conditions. The previous calculation of record for the ESW system was calculation NEMP940921AF, Revision 1, "CCW [component cooling water] Hx [heat exchanger] Flow Multiplier" resulted in a minimum operability limit (at the quarterly IST testing flow of 9200 gpm) of 61.8 psid. The maximum ESW pump flow required under design basis conditions (one unit in normal operation and the other unit in LOCA recirculation) was approximately 9,000 gpm. The revised calculation (MD-02-ESW-75-N) for a single ESW pump required the ESW pump to provide approximately 9700 gpm.

Summary

The licensee performed a 10 CFR 50.59 safety screening for these administrative controls and concluded that the controls do not represent an USQ. The inspectors performed an independent review of this issue and have concluded that closing the ESW cross tie valves to isolate an inoperable ESW pump constitutes an USQ.

10 CFR 50.59, "Changes, tests and experiments," stated that a proposed change, test or experiment shall be deemed to involve an USQ if

> (i) the probability of occurrence or the consequences of an accident or malfunction of equipment important to safety previously evaluated in the safety analysis report may be increased,
>
> (ii) a possibility for an accident or malfunction of a different type than any evaluated previously in the safety analysis report may be created, or
>
> (iii) the margin of safety as defined in the basis for any TS is reduced.

The inspectors' basis for this USQ determination is the following:

- The administrative control of ATR 1(2)-ESW-1 could allow a reduction in the number of ESW pumps available to mitigate design basis accidents below the number assumed in the UFSAR. Therefore, this reduction in system redundancy and overall capability represents an <u>increase in the probability of malfunction of equipment important to safety (i.e. the ESW system)</u>. The reduction in flow capability could result in the inability to provide sufficient cooling flow to non-accident heat loads, such as the spent fuel pool.

- The licensee's administrative controls will rely on a single ESW pump to deliver the minimum required ESW flow to a unit during a design basis accident. Previous analyses described in the UFSAR relied on a minimum of two ESW pumps to mitigate design basis accidents. Furthermore, the previous ESW safety analysis relied on two cross-tied pumps (a Unit 1 and a Unit 2 pump) to meet required cooling water flowrates. The licensee's revised ESW safety analysis methodology resulted in a more restrictive ESW pump operability limit for pump differential pressure and required a higher minimum flow capability under accident conditions. Additionally, the licensee's revised

Additional Background Information

analysis did not consider ESW flow requirements associated with non-accident heat loads, such as spent fuel pool cooling. This result demonstrated a reduction in system capability and represents a decrease in the margin of safety described in licensing basis documents.

Supplemental Information

Industry and NRC Guidance

(i) probability of occurrence or the consequences of an accident or malfunction of equipment important to safety previously evaluated in the safety analysis report may be increased

Industry Guidance

NSAC-125, Section 3.5, "Increase in the Probability of Occurrence of a Malfunction of Equipment Important To Safety," stated that a change that does either of the following is a change that increases the probability of occurrence of a malfunction of equipment important to safety:

- degrades below the design basis the performance of a safety system assumed to function in the accident analysis
- increases challenges to the safety systems assumed to function in the accident analysis such that safety system performance is degraded below the design basis without compensating effects.

NSAC-125, "Guidelines for 10 CFR 50.59 Safety Evaluations," provided industry guidelines for the performance of 10 CFR 50.59 safety evaluations.
Section 4.2.3, "May the proposed activity increase the probability of occurrence of a malfunction of equipment important to safety evaluated previously in the safety analysis report?," provided example questions to be used in making an USQ determination. NSAC-125, Section 4.2.3 stated that if the proposed activity degraded system reliability by:

(1) imposing additional loads not analyzed in the original design,

(2) reducing system/equipment redundancy or independence, or

(3) imposing increased or more severe testing requirements on the system or equipment

then the existence of an USQ is indicated.

(ii) possibility for an accident or malfunction of a different type than any evaluated previously in the safety analysis report may be created

Attachment

Additional Background Information

(iii) <u>reduction in the margin of safety as defined in the basis for any TS.</u>

Industry Guidance

NSAC-125, Section 3.8, “Margin of Safety as Defined in the Basis of Any Technical Specification,” stated that if the TS bases do not specifically address a margin of safety, then the licensee’s safety analysis report (SAR), the NRC’s safety evaluation report (SER), and appropriate other licensing basis documents should be reviewed to determine if the proposed change would result in a reduction in the margin of safety.

NRC Guidance

PART 9900: 10 CFR GUIDANCE “10 CFR 50.59 INTERIM GUIDANCE ON THE REQUIREMENTS RELATED TO CHANGES TO FACILITIES, PROCEDURES AND TESTS (OR EXPERIMENT)”

- In determining whether the margin of safety has been reduced by a proposed change, test or experiment, the licensee should first look to the bases for the particular TS. If a margin of safety is contained in the bases of the TS, any reduction in that margin must be considered a reduction in the margin of safety, and not allowed under the 50.59 process. If the TS bases do not specifically address margin of safety, then the licensee's safety analysis report, the staff's safety evaluation report (SER) and appropriate other licensing basis documents should be reviewed to determine if the proposed change, test or experiment would result in a reduction in the margin of safety. In each case, a determination must be made to establish what constitutes the original licensing basis. The change should be based on changes to physical parameters (or conditions which can be observed or calculated).

April 22, 1996 letter from Brian Grimes, Acting Director, Division of Reactor Program Management to William Rasin, Nuclear Energy Institute concerning the “Review of 10 CFR 50.59 Regulatory Framework” addresses the use of new analysis assumptions and methods. The associated section states that:

- “Staff judgements on the acceptability of safety analysis results generally depend on certain conservatisms in input assumptions and validity and conservatisms of methods; however, these “implicit margins” are not always explicitly documented in the SER. In evaluating a change, a licensee may perform a new analysis (with different methods and assumptions) to demonstrate that there has been no increase in consequences (or as part of an operability determination to demonstrate that a condition is “safe”). If the new analysis reduces margins relied on by the NRC, such cases might constitute an USQ (reduction in the margin of safety). The conditions under which new methodologies may

Additional Background Information

be used in 50.59 evaluations is an area where clarification may be needed."

Technical Specification Requirements

Technical Specification 3.7.4.1.a: "At least two independent essential service water loops shall be operable"

The TS bases state:

- The operability of the essential service water system ensures that sufficient cooling capacity is available for continued operation of safety related equipment during normal and accident conditions. The redundant capacity of this system, assuming a single failure, is consistent with the assumptions used in the accident conditions within acceptable limits.

Technical Specification 3.7.4.1.b required at least one essential service flow path from the opposite unit to be available when the unit is in Modes 1 through 4. However, the action statement associated with this TS allows the licensee up to 7 days to return the flowpath to an available status or establish equivalent shutdown capability and return the flowpath to an available within the next sixty days. The basis for TS 3.7.4.1.b stated that equivalent shutdown capability may be achieved by establishing fire watches in the affected areas.

Probabilistic Risk Assessment Insights

The inspectors reviewed the "Essential Service Water System Notebook," Revision 0, from the licensee's Probabilistic Risk Assessment Final Report dated April 13, 1992. The inspectors concluded that the PRA recognizes the cross tie valves in the ESW system are normally open, credits the capability of the remote unit's ESW pump to supply cooling flow to the accident unit, and acknowledges that ESW flow is required for non-accident loads in the opposite unit. The basis for the inspectors conclusions is as follows:

The notebook stated that, "[N]o more than three pumps are required for any given circumstances, thus providing flexibility of operation and backup capability. For minimum safeguards, only two pumps are required except when the auxiliary feed pumps must be supplied from the ESW system." *[emphasis added]*

- Note that UFSAR Table 9.8-5, "Essential Service Water Minimum Flow Requirements Per Train (GPM)," includes 450 gpm of ESW flow to the Auxiliary Feedwater system for LOCA injection and LOCA recirculation. A note to this table stated that ESW was required only as a backup to the normal condensate supply to the AFW pumps. Based on the UFSAR table and the PRA statement, this indicates that greater than two ESW pumps may be required if AFW flow were supplied by ESW.

Attachment

Additional Background Information

- Section 3.0, “System Operation,” of the Essential Service Water System Notebook (included as part of the licensee’s PRA) dated April 13, 1992, stated that during the LOCA recirculation phase, “by judicious balancing of loads on the two units, minimum safeguards can be handled by two pumps. This is the situation with the least margin. Reduction of spent fuel pit heat exchanger loading eases this condition.” Additionally, section 7.2, “Fault Tree Models,” stated that one pump per unit is sufficient to cover each unit’s ESW needs. Therefore, two ESW pump overall can cover both units.

  The Essential Service Water System Notebook, Section 3.0, “System Operation,” stated that during cold shutdown conditions in the non-accident unit, two pumps are ample for the requirements of both units.

- The cross tie valves are assumed to be open in the ESW system PRA model. The only failure considered for the cross tie valves is a spurious signal to shut. Section 7.2 of the system notebook states: “The cross connect valves were not modeled since their failure would add success to any flow diversion.” The PRA did not consider passive piping failures, therefore, the cross tie valves were not needed to mitigate system leakage.

- The PRA models the ESW system as cross tied with the Unit 1 East and Unit 2 East pumps in service. The accident unit is considered to be Unit 1. The initial conditions considered in the PRA are:

  1 East ESW pump in service and cross ties open to the Unit 2 west pump. The 2W ESW pump was assumed to be in standby (and cross connected to the 1E loop) and no cooling loads were assumed to be supplied via the 2W ESW loop.

  The 1 West pump was in standby and cross tied with the Unit 2 East ESW pump providing a source of cooling water to the 1W ESW loop.

  The analysis considers spurious closure of the cross tie as a possible failure mechanism.

Attachment

Additional Background Information

The success criteria for the ESW system discussed in Section 4.1 of the ESW system notebook required a single ESW pump train (consisting of one ESW pump) delivering full, uninterrupted flow to a single Unit 1 ESW header. The PRA model analyzed Unit 1, therefore the success criteria is applicable only to one unit, the other unit would require an additional ESW pump to support cooling functions. This Unit 1 accident success criteria required either:

1. The 1E ESW pump (i.e., the ESW pump in the accident unit that was running prior to the accident) to continue to run. In this case, no additional ESW flow loads form Unit 2 can be tolerated. If the 1E ESW pump should fail, the 2W ESW must start and provide full flow capability to Unit 1 (i.e. cross ties remain open and no flow diversion to Unit 2 ESW loads).

or,

2. The 1W ESW pump starts and carries the accident loads in Unit 1. In this case, the unit 2E pump (which was assumed running prior to the accident) must continue to run to prevent diversion of ESW flow from the 1W ESW pump to Unit 2

The inspectors noted that closure of the cross tie valves under these conditions would result in a higher probability of failure for the 1E ESW header (due to the unavailability of the 2W ESW pump to provide ESW flow) but may result in a lower probability of failure for the 1W ESW header due to the lower probability of flow diversion if the 2E ESW pump should fail. The inspectors did not determine which effect would have a dominate effect and therefore could not determine if closure of the cross tie valves represents a net risk increase or decrease.