J. Barnie Beasley, Jr., P.E.
Vice President
Vogtle Project

Southern Nuclear Operating Company, Inc.
40 Inverness Center Parkway
P.O. Box 1295
Birmingham, Alabama 35201

Tel 205.992.7110
Fax 205.992.0403

SOUTHERN COMPANY
Energy to Serve Your World℠

May 5, 2000

LCV-1365-D

Docket Nos. 50-424
50-425

U. S. Nuclear Regulatory Commission
ATTN: Document Control Desk
Washington, D. C. 20555

VOGTLE ELECTRIC GENERATING PLANT
UPDATED FINAL SAFETY ANALYSIS REPORT

Gentlemen:

In accordance with the 10 CFR 50.4 (b) and 50.71 (e) Southern Nuclear Operating Company (SNC) hereby submits one signed original and ten copies of Revision 9 to the Vogtle Electric Generating Plant Updated Final Safety Analysis Report (UFSAR). This submittal is provided on a replacement page basis and is accompanied by an effective page list that identifies the current pages of the UFSAR. The replacement pages, which are indicated as Revision 9, reflect changes through November 5, 1999.

Mr. J. B. Beasley, Jr. states that he is a vice president of SNC and is authorized to execute this oath on behalf of SNC and that, to the best of his knowledge and belief, the information contained in the enclosed UFSAR Revision 9 accurately presents changes made since the previous submittal, necessary to reflect information and analyses submitted to the Commission or prepared pursuant to Commission requirements.

SOUTHERN NUCLEAR OPERATING COMPANY

By: J.B. Beasley, Jr.

Sworn to and subscribed before me this 27th day of April, 2000.

Glenda C. Spinks
Notary Public

MY COMMISSION EXPIRES
11-10-02

A053 1/8

JBB/JLL

Enclosure: Updated FSAR, Revision 9

Xc: Southern Nuclear Operating Company
Mr. J. T. Gasser
Mr. M. Sheibani
SNC Document Management

U. S. Nuclear Regulatory Commission
Mr. L. A. Reyes, Regional Administrator
Mr. R. R. Assa, Project Manager, NRR
Mr. J. Zeiler, Senior Resident Inspector, Vogtle

VEGP FSAR Revision 9

Revision Insertion Instructions

May 2000

Item	Action
Distribution List	Replace
p. 1.2.2-5	Replace
p. 1.2.10-3	Replace
p. 1.2.10-5	Replace
t. 1.3.1-2 sheet 4	Replace
t. 1.3.2-2 sheets 1 through 3	Replace
t. 1.7.1-1 sheets 20 through 38	Replace
t. 1.7.1-1 sheet 43	Replace
p. 1.9-11	Replace
p. 1.9-13	Replace
p. 1.9-15	Replace
p. 1.9-17	Replace
p. 1.9-19	Replace
p. 1.9-93	Replace
p. 1.9-119	Replace
p. 1.9-121	Replace
p. 1.9-123	Replace
p. 1.9-125	Replace
p. 1.9-127	Replace
p. 2.2.3-19	Replace
t. 2.2.3-18 sheets 5 and 6	Replace
t. 2.2.3-20	Replace
p. 2.4.12-11	Replace
p. 2.4.12-13	Replace
p. 2.4.12-15	Replace
p. 2.4.12-17	Replace
p. 2.4.12-19	Replace
p. 2.4.12-21	Replace
p. 2.4.12-23	Replace
p. 2.4.12-25	Replace
t. 2.4.12-7B sheet 2	Replace
t. 2.4.12-7D	Replace
p. 2.5.4-13	Replace
p. 2.5.4-15	Replace
p. 2.5.4-17	Replace
p. 2.5.4-19	Replace

Item	Action
p. 2.5.4-21	Replace
p. 2.5.4-23	Replace
p. 2.5.4-25	Replace
p. 2.5.4-27	Replace
p. 2.5.4-29	Replace
p. 2.5.4-31	Replace
p. 2.5.4-33	Replace
p. 2.5.4-35	Replace
p. 2.5.4-37	Replace
p. 2.5.4-39	Replace
p. 2.5.4-41	Replace
p. 3-xix	Replace
t. 3.2.2-1 Contents p. i	Replace
t. 3.2.2-1 sheet 2	Replace
t. 3.2.2-1 sheet 6	Replace
t. 3.2.2-1 sheets 12 and 13	Replace
t. 3.2.2-1 sheet 15	Replace
t. 3.2.2-1 sheets 19 through 21	Replace
t. 3.2.2-1 sheets 46 through 48	Replace
t. 3.2.2-1 sheet 57	Replace
t. 3.2.2-1 sheet 63	Replace
t. 3.2.2-1 sheet 68	Replace
t. 3.2.2-1 sheet 72	Replace
t. 3.2.2-1 sheet 75	Replace
t. 3.2.2-1 sheets 78 and 79	Replace
t. 3.2.2-1 sheets 81 and 82	Replace
t. 3.2.2-1 sheet 84	Replace
t. 3.2.2-1 sheet 88	Replace
t. 3.2.2-1 sheet 90	Replace
t. 3.2.2-1 sheet 99	Replace
p. 3.5.1-3	Replace
p. 3.5.1-5	Replace
t. 3.5.1-7 sheet 2	Replace
t. 3.6.1-1 sheet 1	Replace
p. 3.9.N.1-5	Replace
p. 3.9.N.1-7	Replace
p. 3.9.N.1-9	Replace
p. 3.9.N.1-11	Replace
p. 3.9.N.1-13	Replace
p. 3.9.N.1-15	Replace
p. 3.9.N.1-17	Replace
p. 3.9.N.1-19	Replace
p. 3.9.N.1-21	Replace
p. 3.9.N.1-23	Replace

Item	Action
t. 3.11.B.1-1 sheet 11	Replace
t. 3.11.B.1-1 sheets 18 through 20	Replace
t. 3.11.B.1-1 sheets 43 and 44	Replace
t. 3.11.B.1-1 sheets 46 and 47	Replace
t. 3.11.B.1-1 sheet 50	Replace
t. 3.11.B.1-1 sheet 54	Replace
t. 3.11.B.1-1 sheet 58	Replace
t. 3.11.B.1-1 sheet 61	Replace
t. 3.11.B.1-1 sheet 66	Replace
t. 3.11.B.1-1 sheet 68	Replace
t. 3.11.B.1-1 sheets 87 and 88	Replace
p. 3F-7	Replace
t. 3F-1 sheet 84	Replace
p. 4.1-1	Replace
t. 4.1-1 sheets 2 through 4	Replace
p. 4.2-15	Replace
p. 4.2-17	Replace
p. 4.2-19	Replace
p. 4.2-23	Replace
f. 4.2-11 sheet 2	Replace
f. 4.2-12 sheet 2	Replace
p. 4.3-9	Replace
t. 4.3-1 sheet 1	Replace
t. 4.3-1 sheet 3	Replace
p. 4.4-47	Replace
p. 4.4-51	Replace
p. 5.2.2-5	Replace
t. 5.2.3-3 sheet 2	Replace
p. 5.3.3-1	Replace
p. 5.3.3-3	Replace
p. 5.4.1-3	Replace
p. 5.4.1-11	Replace
p. 5.4.2-5	Replace
p. 5.4.2-7	Replace
p. 5.4.2-13	Replace
p. 5.4.7-1	Replace
p. 5.4.7-7	Replace
p. 5.4.7-15	Replace
f. 5.4.7-1 sheet 2	Replace
p. 6.1.1-5	Replace
p. 6.2.1-37	Replace
p. 6.2.1-39	Replace
t. 6.2.1-72 sheet 2	Replace
p. 6.2.2-9	Replace

Item	Action
p. 6.2.2-11	Replace
p. 6.2.4-1	Replace
p. 6.2.4-11	Replace
t. 6.2.4-1 sheet 9	Replace
f. 6.2.4-1 sheets 1 through 3	Replace
f. 6.2.4-1 sheets 6 through 11	Replace
f. 6.2.4-1 sheet 13	Replace
p. 6.2.5-7	Replace
p. 6.2.5-9	Replace
p. 6.2.5-11	Replace
p. 6.3.2-15	Replace
p. 6.3.2-21	Replace
p. 6.3.2-23	Replace
t. 6.3.2-1 sheet 1	Replace
t. 6.3.2-3 sheets 2 and 3	Replace
t. 6.3.2-7 sheet 4	Replace
p. 6.3.3-5	Replace
p. 7-ix	Replace
p. 7-xi	Delete
p. 7.1.2-21	Replace
p. 7.1.2-23	Replace
p. 7.2.1-3	Replace
p. 7.2.1-9	Replace
p. 7.2.1-11	Replace
p. 7.2.1-13	Replace
p. 7.2.1-15	Replace
p. 7.2.1-19	Replace
t. 7.2.1-2 sheet 1	Replace
t. 7.2.1-3 sheet 2	Replace
p. 7.2.2-19	Replace
p. 7.2.2-23	Replace
p. 7.3.1-7	Replace
t. 7.3.1-4	Replace
t. 7.3.1-5	Replace
t. 7.4.2-1 sheets 3 and 4	Replace
t. 7.5.2-1 sheets 3 and 4	Replace
t. 7.5.2-1 sheet 6	Replace
t. 7.5.2-1 sheet 9	Replace
t. 7.5.2-1 sheet 11	Replace
t. 7.5.2-1 sheet 14	Replace
t. 7.5.4-2	Replace
p. 7.6.4-1	Replace
p. 7.6.6-5	Replace
p. 7.6.6-7	Replace

Item	Action
p. 7.6.6-9	Replace
p. 7.6.6-11	Replace
p. 7.6.6-13	Delete
p. 7.7.1-1	Replace
p. 7.7.1-3	Replace
p. 7.7.1-5	Replace
p. 7.7.1-11	Replace
p. 7.7.1-17	Replace
p. 7.7.1-19	Replace
p. 7.7.1-21	Replace
p. 7.7.1-23	Replace
p. 7.7.1-25	Replace
p. 7.7.1-27	Delete
t. 7.7.1-1 sheets 1 and 2	Replace
t. 7.7.1-2	Delete
f. 7.7.1-10	Replace
f. 7.7.1-11	Delete
f. 7.7.1-12	Delete
f. 7.7.1-13	Delete
f. 7.7.1-14	Delete
p. 7.7.2-5	Replace
p. 7.7.2-7	Replace
p. 8-iii	Replace
p. 8.3.1-17	Replace
p. 8.3.1-21	Replace
p. 8.3.1-23	Replace
p. 8.3.1-33	Replace
p. 8.3.1-43	Replace
p. 8.3.1-45	Replace
t. 8.3.1-4 sheets 1 through 9	Replace
t. 8.3.1-4 sheet 10	Delete
f. 8.3.1-1 sheets 1 through 27	Replace
f. 8.3.1-1 sheets 28 through 30	Add
t. 8.3.2-3	Replace
t. 8.3.2-5 sheets 6 through 8	Replace
t. 8.3.2-5 sheet 10	Replace
t. 8.3.2-8	Replace
p. 9-xix	Replace
p. 9-xxi	Delete
p. 9.1.2-1	Replace
p. 9.1.2-3	Replace
p. 9.1.2-5	Replace
p. 9.1.2-7	Replace
p. 9.1.2-9	Replace

Item	Action
p. 9.1.2-11	Replace
p. 9.1.2-13	Replace
p. 9.1.2-15	Replace
p. 9.1.2-17	Replace
t. 9.1.2-1 sheet 1	Replace with t. 9.1.2-1
t. 9.1.2-1 sheets 2 and 3	Delete
f. 9.1.2-1 sheet 1	Replace
f. 9.1.2-2 sheet 1	Replace
f. 9.1.2-3	Replace
f. 9.1.2-4 sheet 1	Replace
f. 9.1.2-5	Replace
f. 9.1.2-6	Delete
p. 9.1.4-5	Replace
p. 9.1.4-9	Replace
p. 9.1.4-11	Replace
p. 9.1.4-13	Replace
p. 9.1.4-15	Replace
p. 9.1.4-17	Replace
p. 9.1.4-19	Replace
p. 9.1.5-17	Replace
p. 9.1.5-19	Replace
p. 9.1.5-25	Replace
p. 9.1.5-27	Replace
p. 9.1.5-29	Replace
t. 9.1.5-2 sheets 1 through 11	Replace
t. 9.1.5-2 sheet 12	Add
t. 9.1.5-3 sheets 1 and 2	Replace
p. 9.2.1-5	Replace
p. 9.2.1-7	Replace
t. 9.2.1-2 sheet 12	Replace
p. 9.2.6-1	Replace
t. 9.2.8-1	Replace
p. 9.2.10-3	Replace
t. 9.2.10-1	Replace
t. 9.2.11-1	Replace
t. 9.3.1-2 sheet 3	Replace
p. 9.3.2-3	Replace
p. 9.3.2-5	Replace
t. 9.3.2-3 sheets 3 and 4	Replace
t. 9.3.2-4 sheet 6	Replace
p. 9.3.3-5	Replace
p. 9.3.3-9	Replace
t. 9.3.3-1 sheet 1	Replace

Item	Action
t. 9.3.3-2 sheet 1	Replace
p. 9.3.4-7	Replace
p. 9.3.4-9	Replace
p. 9.3.4-21	Replace
p. 9.3.4-29	Replace
p. 9.3.4-33	Replace
p. 9.3.4-37	Replace
p. 9.3.4-39	Replace
p. 9.3.4-41	Replace
t. 9.3.4-1	Replace
t. 9.4.2-2 sheets 1 through 3	Replace
t. 9.4.3-5 sheet 2	Replace
p. 9.5.1-25	Replace
p. 9.5.1-37	Replace
t. 9.5.1-1 sheet 2	Replace
t. 9.5.1-1 sheet 39	Replace
t. 9.5.1-1 sheet 42	Replace
t. 9.5.1-1 sheet 78	Replace
t. 9.5.1-1 sheet 81	Replace
t. 9.5.1-7 sheet 1	Replace
t. 9.5.1-8	Replace
t. 9.5.1-9 sheets 13 through 15	Replace
t. 9.5.1-10 sheet 9	Replace
t. 9.5.1-10 sheets 11 through 13	Replace
t. 9.5.1-10A sheet 11	Replace
p. 9.5.2-1	Replace
t. 9.5.2-1	Replace
p. 9.5.3-1	Replace
p. 9.5.3-3	Replace
t. 9.5.3-1 sheets 1 and 2	Replace
t. 9.5.3-1 sheet 7	Replace
t. 9.5.4-2 sheet 1	Replace
t. 9.5.4-2 sheet 6	Replace
p. 9.5.5-3	Replace
t. 9.5.5-2 sheet 3	Replace
p. 9.5.6-1	Replace
p. 9.5.6-3	Replace
t. 9.5.6-1 sheet 1	Replace
p. 9.5.8-3	Replace
p. 9A.1.2-17	Replace
p. 9A.1.27-1	Replace
p. 9A.1.27-3	Replace
p. 9A.1.28-1	Replace
p. 9A.1.40-5	Replace

Item	Action
p. 9A.1.43-1	Replace
p. 9A.1.45-3	Replace
p. 9A.1.45-5	Replace
p. 9A.1.47-7	Replace
p. 9A.1.49-1	Replace
p. 9A.1.55-1	Replace
p. 9A.1.60A-1	Replace
p. 9A.1.67-5	Replace
p. 9A.1.81-3	Replace
p. 9A.1.82-5	Replace
p. 9A.1.82-9	Replace
p. 9A.1.93-11	Replace
p. 9A.1.114-1	Replace
p. 9A.1.114-3	Replace
p. 9A.1.114-7	Replace
p. 9A.1.115-1	Replace
p. 9A.1.115-3	Replace
p. 9A.1.115-5	Replace
p. 9A.1.115-7	Replace
p. 9A.1.116-3	Replace
p. 9A.2.23-1	Replace
p. 9A.2.24-1	Replace
p. 9A.2.29-3	Replace
p. 9A.2.29-5	Replace
p. 9A.2.31-1	Replace
p. 9A.2.33-3	Replace
p. 9A.2.37-1	Replace
p. 9A.2.43-1	Replace
p. 9A.2.47-1	Replace
p. 9A.2.78-1	Replace
p. 9A.2.78-3	Replace
p. 9A.2.78-7	Replace
p. 9A.2.79-1	Replace.
p. 9A.2.79-5	Replace
p. 9A.2.79-7	Replace
p. 9A.2.80-3	Replace
p. 9B-59	Replace
p. 9B-99	Replace
p. 10.3.5-3	Replace
p. 10.3.5-5	Replace
p. 10.4.6-3	Replace
t. 10.4.6-1 sheet 1	Replace
p. 10.4.7-3	Replace
p. 10.4.7-13	Replace

Item	Action
p. 10.4.7-17	Replace
p. 10.4.9-1	Replace
p. 10.4.9-3	Replace
p. 10.4.9-7	Replace
p. 10.4.10-1	Replace
t. 10.4.10-1	Replace
f. 11.2.2-1	Replace
p. 11.3.2-7	Replace
p. 11.4.2-5	Replace
p. 11.5.2-9	Replace
p. 11.5.2-11	Replace
p. 11.5.2-13	Replace
p. 12.1.1-1	Replace
p. 12.3.1-1	Replace
p. 12.3.4-1	Replace
p. 12.3.4-3	Replace
p. 12.3.4-5	Replace
p. 12.3.4-7	Replace
p. 12.4.2-1	Replace
p. 12.5.1-1	Replace
p. 13.1.1-3	Replace
p. 13.1.1-5	Replace
p. 13.1.1-7	Replace
p. 13.1.1-9	Replace
p. 13.1.1-11	Delete
p. 13.1.1-13	Delete
f. 13.1.1-1	Replace
f. 13.1.1-2	Replace
p. 13.1.2-1	Replace
p. 13.1.2-3	Replace
p. 13.1.2-5	Replace
f. 13.1.2-1	Replace
t. 13.1.3-1 sheets 1 and 2	Replace
p. 13.2.1-1	Replace
f. 13.2.1-1	Replace
p. 13.2.2-1	Replace
p. 13.4.1-1	Replace
p. 13.5.1-1	Replace
p. 13.5.1-5	Replace
p. 13.5.1-7	Replace
p. 13.5.2-5	Replace
p. 14.2.8-85	Replace
p. 15-xix	Replace
p. 15-xxi	Replace

Item	Action
t. 15.0.3-2 sheet 1	Replace
t. 15.0.3-2 sheet 3	Replace
p. 15.0.6-1	Replace
t. 15.0.6-1 sheet 2	Replace
p. 15.0.9-1	Replace
p. 15.0.9-3	Replace
t. 15.0.13-1	Replace
p. 15.1.2-3	Replace
p. 15.1.2-5	Replace
t. 15.1.2-1 sheets 1 and 2	Replace
t. 15.1.2-1 sheet 3	Add
p. 15.1.3-1	Replace
p. 15.1.3-3	Replace
p. 15.1.5-1	Replace
p. 15.1.5-3	Replace
p. 15.1.5-5	Replace
p. 15.1.5-7	Replace
p. 15.1.5-9	Replace
p. 15.1.5-11	Replace
p. 15.4.3-5	Replace
p. 15.4.6-3	Replace
p. 15.4.9-1	Replace
p. 15.4.9-3	Replace
p. 15.5.1-3	Replace
p. 15.5.1-5	Replace
p. 15.5.1-7	Replace
t. 15.5.1-1	Replace with t. 15.5.1-1 sheet 1
t. 15.5.1-1 sheet 2	Add
f. 15.5.1-1 sheets 1 through 3	Replace
f. 15.5.1-1 sheets 4 through 9	Add
p. 15.6.2-1	Replace
p. 15.6.3-1	Replace
p. 15.6.3-5	Replace
p. 15.6.3-7	Replace
p. 15.6.3-9	Replace
p. 15.6.3-13	Replace
p. 15.6.3-15	Replace
p. 15.6.3-17	Replace
t. 15.6.3-1	Replace
t. 15.6.3-2	Replace
t. 15.6.3-3	Replace
t. 15.6.3-4 sheet 2	Replace

Item	Action
t. 15.6.3-5	Replace
t. 15.6.3-6	Replace
t. 15.6.3-7	Replace
t. 15.6.3-9	Replace
t. 15.6.3-11	Replace
f. 15.6.3-1	Replace
f. 15.6.3-2	Replace
f. 15.6.3-3	Replace
f. 15.6.3-4	Replace
f. 15.6.3-5	Replace
f. 15.6.3-6	Replace
f. 15.6.3-7	Replace
f. 15.6.3-8	Replace
f. 15.6.3-9	Replace
f. 15.6.3-10	Replace
f. 15.6.3-11	Replace
f. 15.6.3-12	Replace
f. 15.6.3-13	Replace
f. 15.6.3-14	Delete
f. 15.6.3-15	Delete
p. 15.6.5-5	Replace
t. 15.6.5-2 sheets 1 and 2	Replace
t. 15.6.5-2 sheet 3	Add
p. 15.7.2-1	Replace
p. 15.7.4-1	Replace
p. 15.7.4-3	Replace
p. 15.7.4-5	Replace
p. 15.7.4-7	Replace
p. 15.7.4-9	Replace
p. 15.7.4-11	Add
p. 15A-9	Replace
p. 15A-11	Replace
t. 15A-5	Replace
t. 15A-6	Replace
t. 15A-7	Replace
t. 16.3-1 sheets 1 and 2	Replace
t. 16.3-1 sheet 3	Add
t. 16.3-2 sheets 1 through 3	Replace
t. 16.3-2 sheet 5	Replace
t. 16.3-4 sheet 4	Replace
t. 16.3-4 sheets 9 and 10	Replace
t. 16.3-5 sheets 5 and 6	Replace
t. 16.3-5 sheets 32 and 33	Replace
t. 16.3-5 sheets 36	Replace

Item	Action
t. 16.3-6 sheets 1 and 2	Replace
p. 17.2.1-1	Replace
p. 17.2.1-3	Replace
p. 17.2.1-5	Replace
p. 17.2.1-7	Replace
p. 17.2.1-9	Replace
p. 17.2.1-11	Replace
p. 17.2.1-13	Replace
p. 17.2.1-15	Replace
f. 17.2.1-1	Replace
p. 17.2.2-1	Replace
p. 17.2.2-3	Replace
p. 17.2.4-1	Replace
p. 17.2.5-1	Replace
p. 17.2.5-3	Replace
p. 17.2.6-1	Replace
p. 17.2.7-1	Replace
p. 17.2.12-1	Replace
p. 17.2.16-1	Replace
p. 17.2.17-1	Replace
p. 17.2.18-1	Replace
p. 17.2.18-3	Replace
p. 17.2.18-5	Replace
p. 18.1-9	Replace
p. 18.3-9	Replace
Effective Page List	Replace
REV 9 5/00 Tab	Add at the end of the last volume
Transmittal Letter	Add behind REV 9 5/00 Tab
Revision Insertion Instructions	Add behind transmittal letter
Acknowledgment Letter	Sign/return

VEGP FSAR UPDATE
Distribution List
May 2000

Copy Number	Name	Location
(11 copies)	U.S. Nuclear Regulatory Comm	Document Control Desk
(1 copy)	NRC Regional Administrator	Atlanta Regional Office
(1 copy)	NRC Senior Resident Inspector	VEGP-Site Office
1	Bailey, James A.	SNC-Corporate Office
2	Void	
3	Hoxie-Key, Susan	SNC-Corporate Office
4	Void	
5	Void	
6	UNASSIGNED	
7	UNASSIGNED	
8	UNASSIGNED	
9	Vytlacil, Gordon M.	Westinghouse Elec Corp
10	Unassigned	
11	Stanley, John B.	SNC-VEGP Site
12	Void	
13	Graber, Lyle D.	NUS Corporation
14	Talmadge, R. W.	SCS Birmingham
15	Void	
16	Void	
17	Lacey, Nancy D.	SCS Birmingham
18	Miller, C. C.	SNC-VEGP Site
19	Void	
20	Document Control Supervisor	SNC-VEGP Tech Support CTR

Copy Number	Name	Location
21	Johnson, Veronica	SNC-VEGP Site
22	Dadlani, P. K.	Bechtel Power Corp
23	Eckert, Chris C.	SNC-VEGP Site
24	Outages & Planning	SNC-VEGP Site
25	Leamon, Joseph L.	SNC-Corporate Office
26	Prewitt, Steve E.	SNC-VEGP Site
27	Heard, Charles B. III	SCS Birmingham
28	UNASSIGNED	
29	UNASSIGNED	
30	George, Ben J.	SNC-Corporate Office
31	Shewmake, Bobby W.	SCS Birmingham
32	Sheibani, M.	SNC-VEGP Site
33	Void	
34	Cope, J. D.	Dalton Utilities, Dalton, GA.
35	Myer, Chalmer R.	SCS Birmingham
36	Void	
37	Void	
38	Void	
39	Cardona, A. E.	SNC-VEGP Site
40	Document Control Supervisor	SNC-VEGP Emergency Operations Facility
41	Lloyd, Dale M.	SCS Birmingham
42	Void	
43	Ruckman, Tim A.	SNC-VEGP Site
44	UNASSIGNED	

Copy Number	Name	Location
45	Void	
46	Void	
47	Mehta, Srikant	WSRC
48	Waters, Rebecca S.	SNC-VEGP Site
49	Freeman, Thomas W.	SNC-VEGP Site
50	Operations Library	SNC-VEGP Site
51	UNASSIGNED	
52	Chemistry Staff	SNC-VEGP Site
53	Void	
54	Burmeister, W. L.	SNC-VEGP Site
55	Wehrenberg, James A.	SCS Birmingham
56	Void	
57	Control Room, Shift Supervisor	SNC-VEGP Site
58	Training Center, Library	SNC-VEGP Simulator
59	Seymore, Francis W.	TLG System
60	Void	
61	Domby, Arthur H.	TSL&A, Atlanta, GA
62	Microfilming Coordinator	SCS Birmingham

s:\vegpfsar\distribution_List.doc

program established in the plant administration procedures.

- The initial test program preoperational test phase activities are controlled by procedures in the Startup Manual based on the requirements set forth in the plant administration procedures.

1.2.2.1 Units 1 and 2 Shared Facilities

The following facilities are shared by Units 1 and 2; the locations are noted in parentheses:

- Plant access control (plant entry and security building and alternate plant entry and security building).
- Power block entry (control building).
- Control room (control building).
- Control building support facilities (locker rooms, showers, health physics office, laundry, first aid station, etc.).
- Radioactive laboratories (control building).
- Communication room (service building).
- Technical support center (control building).
- Hot machine shop (auxiliary building).
- Hot instrument decontamination shop (auxiliary building).
- Drum storage area (auxiliary building).
- New fuel pit (fuel handling building).
- Spent fuel cask handling areas (auxiliary and fuel handling building).
- Portions of radwaste transfer building.
- Alternate radwaste building.

- Water analysis room (turbine building).
- Nitrogen storage area (outdoors).
- Dry active waste facilities.
- Hydrogen storage area (outdoors).
- Sewage treatment plant.
- River intake structure (outdoors).
- Water treatment building (outdoors).
- Waste water effluent facility (outdoors).

1.2.2.2 Units 1 and 2 Shared Systems

The following systems or portions of systems are shared by Units 1 and 2:

- Boron recycle.
- Waste processing - liquid.
- Waste processing - gaseous.
- Radwaste solidification - portable vendor supplied.
- Fire protection.
- Instrument and service air.
- Auxiliary gas.
- Plant makeup water treatment.
- Plant makeup water treatment waste neutralization.
- Plant demineralized water.
- Auxiliary steam.
- Turbine-generator hydrogen gas cooling.

pump coolers, sample heat exchangers, waste gas compressors, and other nonsafety-related heat loads.

The ACCW system provides an intermediate barrier between the RCS and the NSCW system described in paragraph 1.2.10.8.

1.2.10.6 Fuel Handling and Storage System

The reactor is refueled with equipment designed to handle spent fuel underwater from the time it leaves the reactor vessel until it is placed in a cask for shipment offsite. Transfer of spent fuel underwater enables the use of an optically transparent radiation shield and provides a reliable source of coolant for removal of residual heat.

The fuel handling system also provides for the safe handling of rod cluster control assemblies under all foreseeable conditions and for the required assembly, disassembly, and storage of reactor internals. This system includes a manipulator crane located inside the containment above the refueling pool, fuel transfer carriage, upending devices, fuel transfer tube, spent fuel cask bridge crane in the spent fuel pool area, and various devices used for handling the reactor vessel head and internals.

The new fuel storage area is shared by both units and is sized to accommodate storage of 162 fuel assemblies and control rods. The new fuel assemblies are stored in racks in parallel rows having a center-to-center distance of approximately 21 in. to preclude criticality.

Together, the two stainless steel-lined, reinforced concrete spent fuel pools provide storage capacity for 2386 fuel assemblies. Spent fuel assemblies are stored in vertical racks spaced to preclude criticality with no credit taken for the borated pool water. See drawings AX4DD303 and 1X4DE317 for the layout of the pools.

Purification and redundant cooling equipment is provided for each spent fuel pool. This equipment may also be used for cleanup of refueling water after each fuel change in the reactor.

1.2.10.7 Sampling Systems

Four sampling systems are provided: nuclear sampling system - liquid, nuclear sampling system - gaseous, turbine plant sampling system, and post-accident sampling system. These

systems are used for determining both chemical and radio-chemical conditions of the various fluids used in the plant.

1.2.10.8 Cooling Water Systems

The turbine-generator condenser is cooled by the circulating water system, which rejects heat to a cooling tower.

The cooling water requirements for various nuclear components, CCW system, ACCW system, and diesel generators are supplied by pumps taking suction from the NSCW tower basins. Water makeup to the storage basins is supplied by the normal plant makeup wells or the Savannah River. In addition, a standby nuclear service makeup well can supply makeup flow to the NSCW system as a backup source of water.

1.2.10.9 Plant Ventilation Systems

Separate ventilation systems are provided for the containment, penetration rooms, auxiliary building, fuel handling building, control room, control building, turbine building, and emergency diesel generator building. In addition, a purge system, mini-purge system, post-loss-of-coolant accident purge system, and containment preaccess filtration system are provided for the containment.

The auxiliary building, fuel handling building, and control building penetration rooms are ventilated by the penetration room filtration systems, which include filters for control of any leakage from process components during the recirculation mode of emergency core cooling system operation.

1.2.10.10 Plant Fire Protection System

The major fire protection system contains both diesel- and electric-driven fire pumps which supply the various hydrants, hose stations, sprinklers, and deluge systems. Hydrants and hose stations are manually operated; the sprinkler and deluge systems are a combination of automatic and manually actuated systems. Supplementary to these facilities, chemical fire-extinguishing equipment is provided to accommodate special requirements for various classes of hazards. Noncombustible and fire-resistant materials are selected for use wherever practical throughout the facility, particularly in critical portions of the plant such as the containment, control room, and components of the safety features system.

1.2.10.11 Compressed Air Systems

One reciprocating and two rotary air compressors, with separate aftercoolers and separators, discharge compressed air to two separate headers. These headers provide a continuous supply of filtered, dried, oil-free, compressed air for pneumatic instrument operation and control of pneumatic actuations. The system also provides service air at outlets throughout the plant. An additional reciprocating compressor train can be aligned to either unit.

1.2.10.12 Radioactive Waste Disposal System

The waste disposal system provides controlled handling and disposal of liquid, gaseous, and solid wastes. The waste processing system provides all equipment necessary for controlled treatment and preparation for retention or disposal of all liquid, gaseous, and solid wastes produced as a result of reactor operation.

The liquid waste processing system collects, processes, and recycles reactor grade water; removes or concentrates radioactive constituents; and processes them until suitable for release or shipment offsite. Liquid wastes are sampled and activity levels verified and recorded prior to release. Processed liquid effluent from the RCS will have been subjected to the CVCS purification ion exchanger and the components of the waste processing system and will be within the limits established by the Offsite Dose Calculation Manual.

The gaseous waste processing system functions to remove fission product gases from the reactor coolant and to contain these gases during normal plant operation. Waste gases are collected in the vent header. These gases are withdrawn from the vent header by one of two compressors and discharged to a waste gas decay tank. The tank contents will be released to the environment in accordance with the program requirements of Technical Specifications, and releases will be within the limits set forth in the Offsite Dose Calculation Manual. Seven waste gas decay tanks and two shared waste gas decay shutdown tanks are provided. Gaseous wastes are discharged through an absolute particle filter to the vent stack.

Solid wastes are stored in suitable containers for eventual disposal.

TABLE 1.3.1-2 (SHEET 4 OF 5)

Item		Vogtle Units 1 and 2 (FSAR) (Original Design)	San Onofre Units 2 and 3 (FSAR)	Farley Units 1 and 2 (FSAR)	Calvert Cliffs Units 1 and 2 (FSAR)
Discharge:	Evaporator distillate (waste evaporator abandoned in place)	Waste evaporator condensate tank	Circulating water outfall	Circulating water outfall	Circulating water outfall
	Evaporator bottoms (waste evaporator abandoned in place)	Reactor makeup water storage tank (RMWST) solid radwaste system	Solid radwaste system	Solid radwaste system	Solid radwaste system
Recycle capability		Yes	Yes	Yes	Yes
Total reprocessing storage capacity (holdup tanks)		41,600 gal (both units)	1 at 6000 gal 2 at 25,000 gal	40,000 gal	8000 gal
Filter type and backflushable		Disposable cartridge and backflushable	Disposable cartridge	Disposable cartridge	Disposable cartridge
Evaporator capacity (waste evaporator abandoned in place)		15 gal/min	50 gal/min	35 gal/min 20 gal/min	
Coolant and boric acid recycle system		Shared BRS (part of CVCS for each unit)	Shared	Shared	Shared (reactor coolant waste processing system)
Discharge:	Concentrator bottoms	Recycled to boric acid storage tank	No; recycled to boric acid makeup and batching tanks	Liquid radwaste system	Solid radwaste system
	Concentrator condensate	Recycled to RMWST	No; recycled to CVCS discharge	No; recycled to CVCS	Circulating water
Concentrator capacity		15 gal/min	50 gal/min	30 gal/min	2 at 20 gal/min
Concentrated boric acid storage tanks		2 at 46,000 gal each	2 at 25,000 gal each	2 at 21,000 gal each	2 at 10,000 gal each
Radwaste receiver tanks		2 at 112,000 gal each (recycle holdup tank)	2 primary at 120,000 gal each and 2 secondary at 120,000 gal each	3 at 28,000 gal each	2 waste receiver tanks at 90,000 gal each

TABLE 1.3.2-2 (SHEET 1 OF 3)

TMI ACTION PLAN TASKS AND LOCATION OF FSAR DESCRIPTION

Action Plan Task	Title	FSAR Section
I.A.1.1	Shift Technical Advisor	13.1.2
I.A.1.2	Shift Supervisor Administrative Duties	13.5.1
I.A.1.3	Shift Manning	13.5.1
I.A.2.1	Reactor Operator and Senior Reactor Operator Training and Qualifications	13.2.1/13.1.2 13.1.3/13.2.2
I.A.2.3	Administration of Training Programs	13.2.1/13.1.3 13.2.2
I.A.3.1	Scope and Criteria for License Exams	13.2.1
I.B.1.2	Independent Safety Engineering Group	13.4.3/17.2.1
I.C.1	Evaluation and Development of Procedures for Transients and Accidents	13.5.1/13.5.2 1.9.33
I.C.2	Shift and Relief Turnover Procedures	13.5.1
I.C.3	Shift Supervisor Responsibilities	13.5.1
I.C.4	Control Room Access	13.5.1
I.C.5	Feedback of Operating Experience	13.5.1
I.C.6	Verify Correct Performance of Operating Activities	13.5.1/13.5.2
I.C.7	Nuclear Steam Supply System (NSSS) Vendor Review of Procedures	13.5
I.D.1	Control Room Design Review	18.1.1
I.D.2	Safety Parameter Display System (SPDS)	7.5.4/18.3.5
I.G.1	Training During Low Power Testing	14.2.5
II.B.1	RCS Vents	5.1.1/5.4.15
II.B.2	Plant Shielding	12.2.1/12.3.1
II.B.3	Post-Accident Sampling	9.3.2/7.5.2
II.B.4	Training for Mitigating Core Damage	13.2.2
II.D.1	Relief and Safety Valve Test Requirements	5.4.13
II.D.3	Valve Position Indication	5.4.13
II.E.1.1	Auxiliary Feedwater System Reliability Evaluation	10.4.9/10A.1
II.E.1.2	Auxiliary Feedwater System Initiation and Flow	10.4.9/7.5.4
II.E.3.1	Emergency Power for Pressurizer Heaters	5.4.10
II.E.4.1	Containment Dedicated Penetrations	NA
II.E.4.2	Containment Isolation Dependability	6.2.4

TABLE 1.3.2-2 (SHEET 2 OF 3)

Action Plan Task	Title	FSAR Section
II.F.1	Additional Accident Monitoring Instrumentation	7.5.4/6.2.5
II.F.2	Inadequate Core Cooling Instruments	7.5.4/7.7.2 Appendix 4A
II.G.1	Emergency Power For Pressurizer Equipment	5.4.11
II.K.1	IE Bulletins	
	5. Review ESF Valves	6.3.1/7.5.4
	10. Operability Status	13.5.1
	17. Trip per Low Level B/S	5.4.10
II.K.2.13	Thermal Mechanical Report	5.3.3
II.K.2.17	Voiding in RCS	15.0.1
II.K.2.19	Benchmark Analysis Seq. AFW Flow	15.0.1
II.K.3	Final Recommendation of B & O Task Force	
	1. Auto Power-Operated Relief Valves (PORVs) Isolation	5.4.11
	2. Report on PORV Failures	NA
	3. Reporting Relief Valve and Safety Valve Failures and Challenges	5.4.1
	5. Auto Trip of Reactor Coolant Pumps	5.4.1
	9. PID Controller	PLS[a]/5.4.10
	10. Anticipatory Trip at High Power	7.2.1
	12. Confirm Anticipatory Trip	7.2.1
	17. ECCS Outages	13.5.1
	25. Power to Pump Seals	5.4.1
	30. Small Break Loss-of-Coolant Accident (LOCA) Methods	15.0.1
	31. Plant Specific Analysis	15.0.1
III.A.1.1	Upgrade Emergency Preparedness	13.3
III.A.1.2	Upgrade Emergency Support Facilities	9.5.10
III.A.2	Upgrade Emergency Plans, App. E, 10 CFR 50	13.3
	Meteorological Data	2.3.3

TABLE 1.3.2-2 (SHEET 3 OF 3)

Action Plan Task	Title	FSAR Section
III.D.1.1	Primary Coolant Sources Outside Containment	12.1.3/ 9.3.4
III.D.3.3	Inplant Radiation Monitoring	12.5.2
III.D.3.4	Control Room Habitability	6.4

a. The precautions, limitations, and setpoints document states that derivitive control shall be set at zero on the pressure PID controller.

TABLE 1.7.1-1 (Sheet 20 of 55)

Drawing Number	Section	Title
1X4DE606	9.1.5	Safe Load Path for Cartridge Filter Monorail Auxiliary Building Level D Monorail 2108-R4-064 (Unit 1)
1X4DE607	9.1.5	Safe Load Path for Auxiliary Feedwater Pumphouse Sump Pump Hatches (Unit 1)
1X4DE608	9.1.5	Safe Load Path for Containment Building, Carbon Bed Containers
1X4DJ4103	6.2.2	Containment Cooling System Equipment Location
1X4DJ4113	6.2.2	Containment Cooling System Equipment Location
1X4DJ4123	6.2.2	Containment Cooling System Equipment Location
1X4DJ4133	6.2.2	Containment Cooling System Equipment Location
1X4DL4A01	6.5.2	Spray Nozzle Locations and Orientations
1X4DL4A14	3.8.2	Containment Building - Containment Wall Piping Penetration Design List (Unit 1)
1X4DL4A17	5.1.2	Reactor Coolant Loops Plan and Section (Unit 1)
1X4DL4D01	6.5.2	Spray Nozzle Locations and Orientations
1X4DL4D09	6.5.2	Spray Nozzle Locations and Orientations
1X5AB01-66	18.1	Control Room Panels, QPCP, Section 1 (Unit 1)
1X5AB01-67	18.1	Control Room Panels, QPCP, Section 2 (Unit 1)
1X5AB01-557	18.1	Control Room Panels, QHVC, Section 1 (Unit 1)

TABLE 1.7.1-1 (Sheet 21 of 55)

Drawing Number	Section	Title
1X5AB01-560	18.1	Control Room Panels, QHVC, Sections 2 and 3 (Unit 1)
1X5AB01-563	18.1	Control Room Panels, QPCP, Section 3 (Unit 1)
1X5DN002-1	1.7.1	Legend for Control Logic Drawings
1X5DN002-2	1.7.1	Legend for Control Logic Drawings
1X5DN002-3	1.7.1	Legend for Control Logic Drawings
1X5DN013-1	7.3.11	Containment Coolers
1X5DN013-2	7.3.11	Containment Coolers
1X5DN013-4	7.3.3	Containment Combustible Gas Control System
1X5DN013-4	7.3.11	Containment Coolers
1X5DN015-1	7.3.3	Containment Combustible Gas Control System
1X5DN017-2	7.3.3	Containment Combustible Gas Control System
1X5DN019-1	7.3.4	Containment Purge Isolation Logic Diagram
1X5DN019-2	7.3.4	Containment Purge Isolation Logic Diagram
1X5DN030-1	7.3.13	Auxiliary Building ESF HVAC System Actuation Logic Diagram
1X5DN030-3	7.3.13	Auxiliary Building ESF HVAC System Actuation Logic Diagram
1X5DN030-4	7.3.13	Auxiliary Building ESF HVAC System Actuation Logic Diagram
1X5DN030-5	7.3.13	Auxiliary Building ESF HVAC System Actuation Logic Diagram

TABLE 1.7.1-1 (Sheet 22 of 55)

Drawing Number	Section	Title
1X5DN044-1	7.3.12	Control Building ESF HVAC System Actuation Logic Diagram
1X5DN044-2	7.3.12	Control Building ESF HVAC System Actuation Logic Diagram
1X5DN045-1	7.3.12	Control Building ESF HVAC System Actuation Logic Diagram
1X5DN058-1	7.3.15	Diesel Generator Building ESF HVAC System Actuation Logic Diagram
1X5DN058-3	7.3.15	Diesel Generator Building ESF HVAC System Actuation Logic Diagram
1X5DN058-4	7.3.15	Diesel Generator Building ESF HVAC System Actuation Logic Diagram
1X5DN058-5	7.3.15	Diesel Generator Building ESF HVAC System Actuation Logic Diagram
1X5DN065-1	7.3.13	Auxiliary Building ESF HVAC System Actuation Logic Diagram
1X5DN068-1	7.3.14	Auxiliary Feedwater Pumphouse ESF HVAC System Actuation Logic Diagram
1X5DN068-3	7.3.14	Auxiliary Feedwater Pumphouse ESF HVAC System Actuation Logic Diagram
1X5DN069-1	7.3.16	Electrical Tunnel ESF HVAC System Actuation Logic Diagram
1X5DN086-1	7.3.9	NSCW System Logic Diagram
1X5DN087-1	7.3.9	NSCW System Logic Diagram
1X5DN087-2	7.3.9	NSCW System Logic Diagram
1X5DN087-3	7.3.9	NSCW System Logic Diagram
1X5DN087-4	7.3.9	NSCW System Logic Diagram

TABLE 1.7.1-1 (Sheet 23 of 55)

Drawing Number	Section	Title
1X5DN087-5	7.3.9	Control Logic Diagram Nuclear Service Cooling Water Pumps
1X5DN089-1	7.3.9	NSCW System Logic Diagram
1X5DN089-2	7.3.9	NSCW System Logic Diagram
1X5DN089-3	7.3.9	NSCW System Logic Diagram
1X5DN090-1	7.3.9	NSCW System Logic Diagram
1X5DN090-2	7.3.9	NSCW System Logic Diagram
1X5DN090-3	7.3.9	NSCW System Logic Diagram
1X5DN090-6	7.3.9	Control Logic Diagram Nuclear Service Cooling Water System Auxiliaries and Alarms
1X5DN091-1	7.3.10	Component Cooling Water System Logic Diagram
1X5DN091-2	7.3.10	Component Cooling Water System Logic Diagram
1X5DN091-3	7.3.10	Component Cooling Water System Logic Diagram
1X5DN092-1	7.3.10	Component Cooling Water System Logic Diagram
1X5DN092-2	7.3.10	Component Cooling Water System Logic Diagram
1X5DN094-3	7.6.6	RCP Thermal Barrier Cooling Water Isolation Logic Diagram
1X5DN107-1	7.3.17	Diesel Generator Fuel Oil System Actuation Logic Diagram
1X5DN114-4	7.6.6	Refueling Water Storage Tank Isolation Logic Diagram

TABLE 1.7.1-1 (Sheet 24 of 55)

Drawing Number	Section	Title
1X5DN117-1	7.3.7	Auxiliary Feedwater Actuation Logic Diagram
1X5DN117-2	7.3.7	Auxiliary Feedwater Actuation Logic Diagram
1X5DN117-3	7.3.7	Auxiliary Feedwater Actuation Logic Diagram
1X5DN120-1	7.3.7	Auxiliary Feedwater Actuation Logic Diagram
1X5DN120-2	7.3.7	Auxiliary Feedwater Actuation Logic Diagram
1X5DN120-3	7.3.7	Auxiliary Feedwater Actuation Logic Diagram
1X5DN120-5	7.3.7	Auxiliary Feedwater Actuation Logic Diagram
1X5DN120-6	7.3.7	Auxiliary Feedwater Actuation Logic Diagram
1X5DN121-1	7.3.7	Auxiliary Feedwater Actuation Logic Diagram
1X5DN121-2	7.3.7	Auxiliary Feedwater Actuation Logic Diagram
1X5DN122-1	7.3.7	Auxiliary Feedwater Actuation Logic Diagram
1X5DN122-2	7.3.7	Auxiliary Feedwater Actuation Logic Diagram
1X5DN149-1	7.3.8	Main Steam and Feedwater Isolation Logic Diagram
1X5DN149-2	7.3.8	Main Steam and Feedwater Isolation Logic Diagram

TABLE 1.7.1-1 (Sheet 25 of 55)

Drawing Number	Section	Title
1X5DN149-3	7.3.8	Main Steam and Feedwater Isolation Logic Diagram
1X5DN149-4	7.3.8	Main Steam and Feedwater Isolation Logic Diagram
1X5DN150-1	7.3.8	Main Steam and Feedwater Isolation Logic Diagram
1X5DN150-2	7.3.8	Main Steam and Feedwater Isolation Logic Diagram
1X5DN150-3	7.3.8	Main Steam and Feedwater Isolation Logic Diagram
1X5DN150-4	7.3.8	Main Steam and Feedwater Isolation Logic Diagram
1X5DN151-1	7.6.6	CVCS Letdown Line Isolation Logic Diagram
1X5DN151-2	7.6.6	CVCS Letdown Line Isolation Logic Diagram
1X5DN152-1	7.6.6	Steam Generator Blowdown Line Isolation Logic Diagram
1X5DN152-2	7.6.6	Steam Generator Blowdown Line Isolation Logic Diagram
1X5DN203-1	10.2.2	Control Logic Diagram Main Turbine Tripping System
1X5DV002	1.7.1	Legend for Control Loop Drawings
1X6AA02-225	7.2.1	Index and Symbols
1X6AA02-226	7.2.1	Reactor Trip Signals
1X6AA02-227	7.2.1	Nuclear Instrument and Manual Trip Signals
1X6AA02-228	7.2.1	Nuclear Instrument Permissives and Blocks
1X6AA02-229	7.2.1	Primary Coolant System Trip Signals

TABLE 1.7.1-1 (Sheet 26 of 55)

Drawing Number	Section	Title
1X6AA02-230	7.2.1	Pressurizer Trip Signals
1X6AA02-231	7.2.1	Steam Generator Trip Signals
1X6AA02-232	7.2.1	Safeguard Actuation System
1X6AA02-233	7.2.1	Rod Controls and Rod Stops
1X6AA02-234	7.2.1	Steam Dump Control
1X6AA02-235	7.2.1	Pressurizer Pressure Control
1X6AA02-236	7.2.1	Pressurizer Heater Control
1X6AA02-237	7.2.1	Feedwater Control and Isolation
1X6AA02-238	7.2.1	Feedwater Control and Isolation
1X6AA02-239	7.2.1	Auxiliary Feedwater Pumps Startup
1X6AA02-240	7.2.1	Turbine Trips, Runback, and Other Signals
1X6AA02-494	7.2.1	Pressurizer Pressure Relief System (Train A)
1X6AA02-495	7.2.1	Pressurizer Pressure Relief System (Train B)
1X6AA02-496	7.2.1	Pressurizer Level Control
1X6AA02-519	7.2.1	Safeguard Actuation System
1X6AVO2-46	18.1	Control Room Panels, QMCB, Section A1 (Unit 1)
1X6AVO2-47	18.1	Control Room Panels, QMCB, Section A2 (Unit 1)
1X6AVO2-48	18.1	Control Room Panels, QMCB, Section C (Unit 1)
1X6AVO2-49	18.1	Control Room Panels, QMCB, Section B1 (Unit 1)

TABLE 1.7.1-1 (Sheet 27 of 55)

Drawing Number	Section	Title
1X6AVO2-50	18.1	Control Room Panels, QMCB, Section B2 (Unit 1)
1X6AVO2-60	18.1	Control Room Panels QMCB, Section D (Unit 1)
1X6DD001	12.3.1	Radiation Zones - Accessibility During Operations - Containment Building - Floor Plan el. 171 ft 9 in.
1X6DD002	12.3.1	Radiation Zones - Accessibility During Operations - Containment Building - Floor Plan el. 195 ft 0 in.
1X6DD003	12.3.1	Radiation Zones - Accessibility During Operations - Containment Building and Equipment Building - Floor Plan el. 220 ft 0 in.
1X6DD004	12.3.1	Radiation Zones - Accessibility During Operations - Diesel Generator Building - Floor Plan
1X6DD100	12.3.1	Radiation Zone Map Post TMI 24 Hours - Diesel Generator Building Floor Plans
1X6DD101	12.3.1	Radiation Zone Map Post TMI 24 Hours - Auxiliary Feedwater Pump House - Floor Plan
1X6DD200	12.3.1	Personnel Flow - Containment Building - Floor Plan el. 171 ft 9 in. (Unit 1)
1X6DD201	12.3.1	Personnel Flow - Containment Building - Floor Plan el. 195 ft 0 in. (Unit 1)
1X6DD202	12.3.1	Personnel Flow - Containment Building and Equipment Building-Floor Plan el. 220 ft 0 in. (Unit 1)
1X6DD203	12.3.1	Personnel Flow - Diesel Generator Building - Floor Plan

TABLE 1.7.1-1 (Sheet 28 of 55)

Drawing Number	Section	Title
1X6DD300	3F	Auxiliary Feedwater Pump House Area Nodal Boundary
1X6DD301	3F	Nodal Boundary MSIV/MFIV Area - Control Building
1X6DD302	3F	Nodal Boundary MSIV/MFIV Area - Control Building
2X2D01J019	3.8.2	Containment - Wall Liner Plate Penetrations Details Sh. 1
2X3D-AA-A01A	8.3.1	Main One Line (Unit 2)
2X3D-AA-G01A	8.3.1	Class 1E dc and 120-Volt ac Power Supply
2X3D-AA-K02A	8.3.1	Safety Load Sequencer Table (Train A, Unit 2)
2X3D-AA-K02B	8.3.1	Safety Load Sequencing Table (Train A, Unit 2)
2X3DG030	9.5.3	Lighting Systems Schematic
2X4DB111	5.1.2	Reactor Coolant System P&ID (Unit 2)
2X4DB112	5.1.2	Reactor Coolant System P&ID (Unit 2)
2X4DB116-1	6.3.2	Chemical and Volume Control System
2X4DB116-2	9.3.4	Chemical and Volume Control System
2X4DB119	6.3.2	Safety Injection System (Unit 2)
2X4DB120	6.3.2	Safety Injection System P&ID
2X4DB121	6.3.2	Safety Injection System P&ID
2X4DB122	5.4.7	Residual Heat Removal System P&ID (Unit 2)
2X4DB140	9.3.2	Nuclear Sampling System - Liquid (Unit 2)

TABLE 1.7.1-1 (Sheet 29 of 55)

Drawing Number	Section	Title
2X4DB149-1	9.2.1	Flow Diagram for NSCW, CCW, and ACCW Systems (Unit 2)
2X4DB149-2	9.2.1	Flow Diagram for NSCW, CCW, and ACCW Systems (Unit 2)
2X4DB149-3	9.2.1	Flow Diagram for NSCW, CCW, and ACCW Systems (Unit 2)
2X4DB149-4	9.2.1	Flow Diagram for NSCW, CCW, and ACCW Systems (Unit 2)
2X4DB159-1	10.3.2	Main Steam Supply System (Unit 2)
2X4DB170-1	9.5.4	Diesel Generator System
2X4DB170-2	9.5.4	Diesel Generator System
2X4DB174-2	9.5.1	Fire Protection Water Systems (Unit 2)
2X4DB174-4	9.5.1	Fire Protection Water Systems (Unit 2)
2X4DB203	9.4.9	P&ID - Equipment Building HVAC System (Unit 2)
2X4DB205-1	9.4.3	Piping Penetration Area Filtration and Exhaust System (Unit 2)
2X4DB208-1	9.4.3	Auxiliary Building Normal Ventilation System (Unit 2)
2X4DB228	9.4.2	P&ID - ESF Room Coolers System
2X4DB245	9.4.9	P&ID - Piping Penetration Ventilation System (Unit 2)
2X4DB250-1	9.4.9	Miscellaneous HVAC Systems Flow Diagrams (Unit 2)
2X4DB259-1	9.4.5	Control Building Electrical and Pipe Penetration Room Filter and Exhaust System (Unit 2)

TABLE 1.7.1-1 (Sheet 30 of 55)

Drawing Number	Section	Title
2X4DB266-1	9.4.1	Control Building Level B HVAC Flow Diagrams
2X4DC103	1.2.3	As-Built Heat Balance Diagram (100 Percent Reactor Power)
2X4DE327	9.5.8	Equipment Location Layout, Diesel Generator Building (Unit 2)
2X4DE330	9.5.8	Equipment Location Layout, Diesel Generator Building (Unit 2)
2X4DE502	9.1.5	Heavy Load Handling - Auxiliary Building Level B, el. 170 ft 6 in. to 195 ft 0 in. (Unit 2)
2X4DE503	9.1.5	Heavy Load Handling - Auxiliary Building Level A, el. 195 ft 0 in. (Unit 2)
2X4DE504	9.1.5	Heavy Load Handling - Auxiliary Building Level 1, el. 220 ft 0 in. to 240 ft 0 in. (Unit 2)
2X4DE505	9.1.5	Heavy Load Handling - Auxiliary Building Level 2, el. 240 ft 0 in. and Above (Unit 2)
2X4DE506	9.1.5	Heavy Load Handling - Containment, Control, and Fuel Handling Building Level A, el. 200 ft 0 in. (Unit 2)
2X4DE507	9.1.5	Heavy Load Handling - Containment, Control, and Fuel Handling Building Level 1, el. 220 ft 0 in. (Unit 2)
2X4DE508	9.1.5	Heavy Load Handling - Containment Internal Section Looking North
2X4DE509	9.1.5	Heavy Load Handling - Containment, Control, and Fuel Handling Building Level 2, el. 240 ft 0 in. (Unit 2)

TABLE 1.7.1-1 (Sheet 31 of 55)

Drawing Number	Section	Title
2X4DE510	9.1.5	Heavy Load Handling - Containment, Control, and Fuel Handling Building Level 3, el. 260 ft 0 in. (Unit 2)
2X4DE511	9.1.5	Heavy Load Handling - Diesel Generator Building (Unit 2)
2X4DE512	9.1.5	Heavy Load Handling - Auxiliary Feedwater Pump House and Condensate Storage Tank
2X4DE514	9.1.5	Heavy Load Handling - Control Building Piping Area 2B Level 3, el. 260 ft 0 in. to 280 ft 0 in.
2X4DE515	9.1.5	Heavy Load Handling - North Main Steam Valve Room Piping Area 2E Level 1, el. 220 ft 0 in. and Above
2X4DE516	9.1.5	Heavy Load Handling - Control Building Piping Area 2F Level 1, el. 220 ft 0 in. and Above
2X4DE517	9.1.5	Heavy Load Handling - North Feedwater Valve Room Piping Area 2E Level A, el. 200 ft 0 in. to el. 220 ft 0 in.
2X4DE518	9.1.5	Heavy Load Handling - Train A Nuclear Service Cooling Water Tower Level 1, el. 220 ft 0 in. (Unit 2)
2X4DE519	9.1.5	Heavy Load Handling - Train B Nuclear Service Cooling Water Tower Level 1, el. 220 ft 0 in. (Unit 2)
2X4DE520	9.1.5	Heavy Load Handling - Containment, Control, and Fuel Handling Building Level B, el. 180 ft 0 in. (Unit 2)
2X4DE521	9.1.5	Heavy Load Handling - Auxiliary Building Level D, el. 119 ft 3 in. to 143 ft 3 in. (Unit 2)

TABLE 1.7.1-1 (Sheet 32 of 55)

Drawing Number	Section	Title
2X4DE522	9.1.5	Heavy Load Handling - Auxiliary Building Level C, el. 143 ft 6 in. to 170 ft 6 in. (Unit 2)
2X4DE600	9.1.5	Safe Load Path for Buttress No. 3 Cranes Control Building, Level 3 el. 260 ft 0 in. 2-2101-R4-016 and 2-2101-R4-015 (Unit 2)
2X4DE601	9.1.5	Safe Load Path for Cartridge Filter Monorail Auxiliary Building Level D Monorail 2108-R4-064 (Unit 2)
2X4DL4A14	3.8.2	Containment Building - Containment Wall Piping Penetration Design List (Unit 2)
2X4DL4A17	5.1.2	Reactor Coolant Loops Plan and Section (Unit 2)
2X6AH02-30000	6.3.2	Charging Pump Orifice Assembly (Unit 2)
2X6DD001	12.3.1	Radiation Zones - Accessibility During Operations - Containment Building - Floor Plan, el. 171 ft 9 in.
2X6DD002	12.3.1	Radiation Zones - Accessibility During Operations - Containment Building - Floor Plan, el. 195 ft 0 in.
2X6DD003	12.3.1	Radiation Zones - Accessibility During Operations - Containment Building and Equipment Building - Floor Plan, el. 220 ft. 0 in.
2X6DD200	12.3.1	Personnel Flow - Containment Building - Floor Plan, el. 171 ft 9 in. (Unit 2)
2X6DD201	12.3.1	Personnel Flow - Containment Building - Floor Plan, el. 195 ft 0 in. (Unit 2)
2X6DD202	12.3.1	Personnel Flow -Containment Building and Equipment Building - Floor Plan, el. 220 ft 0 in. (Unit 2)

TABLE 1.7.1-1 (Sheet 33 of 55)

Drawing Number	Section	Title
AX1D08A02-2	3F	Auxiliary Building Level D (el. 119 ft 3 in.) Hazards Analysis Room Locations
AX1D08A02-3	3F	Auxiliary Building Level D (el. 119 ft 3 in.) Hazards Analysis Room Locations
AX1D08A03-3	3F	Auxiliary Building Level C (el. 143 ft 6 in.) Hazards Analysis Room Locations
AX1D08A03-4	3F	Auxiliary Building Level C (el. 143 ft 6 in.) Hazards Analysis Room Locations
AX1D08A04-4	3F	Auxiliary Building Level B (el. 170 ft 6 in.) Hazards Analysis Room Locations
AX1D08A31	3F	Auxiliary Building Level C (el. 143 ft 6 in.) Hazards Analysis Room Locations
AX1D11A04	6.4.2	Control Room Envelope
AX1D45A01	1.2.2	Location and Orientation of Buildings
AX1D65A14-1	1.2.2	Dry Active Waste Processing Building
AX2D09A017	12.3.2	Fuel Transfer Tube Shielding Details
AX2D11A048	3.8.4	Control Building Electrical Tunnel - Forming Plan at el. 200 ft 0 in. (Unit 1)
AX2D46T001	2.5.4	Excavation Plan Power Block
AX2D46T025	2.5.4	Noncategory Backfill Requirements Yard Area
AX2D55V001	2.5.4	Settlement Observation Markers Location and Details
AX2D65A400	1.2.2	Dry Active Waste Storage Building
AX2D94V031	3.8.5	Typical Waterstop Installation at Seismic Separation Joint
AX3D-AA-A01A	8.1	Main One Line
AX3D-AA-A03A	8.2.1	Master One Line

TABLE 1.7.1-1 (Sheet 34 of 55)

Drawing Number	Section	Title
AX3D-AA-G02A	8.3.1	125-V dc High Voltage Substation
AX3D-AA-G02B	8.3.1	Common Non-Class 1E Essential ac Power System and dc Power System
AX3D-AA-G02C	8.3.2	Main One Line, CAS and SAS Distribution System
AX3D-AA-L50A	8.2.1	Switchyard Arrangement
AX3D-CA-L5OA	18.1	Control Room Panels QEAB, Section 1B (Unit 1)
AX3DG030	1.7.1	Legend for Communications and Lighting Drawings
AX3DL060	8.2.1	Ultimate Development - Substation
AX4DB105-1	11.4.2	Resin Filter P&ID
AX4DB105-2	11.4.2	Resin Filter P&ID
AX4DB105-4	9.3.3	Auxiliary Building and Miscellaneous Drains
AX4DB105-5	11.4.2	Crud Transfer P&ID
AX4DB123-1	9.3.4	Boron Recycle System
AX4DB123-2	9.3.4	Boron Recycle System
AX4DB124-1	11.2.1	Waste Processing System Liquid
AX4DB124-2	11.2.2	ARB Radwaste Demineralizer System
AX4DB124-3	11.2.2	ARB Radwaste Demineralizer System
AX4DB124-4	11.2.2	ARB Radwaste Demineralizer System
AX4DB152-2	2.4.13	Waste Water Effluent System
AX4DB152-3	2.4.13	Waste Water Effluent System
AX4DB158-1	9.3.7	Circulating Water Chemical Injection System

TABLE 1.7.1-1 (Sheet 35 of 55)

Drawing Number	Section	Title
AX4DB158-3	9.3.7	Circulating Water Chemical Injection System
AX4DB165	9.3.7	NSCW Chemical Injection System
AX4DB175-5	9.3.1	Instrument and Service Air System
AX4DB176-1	9.3.5	Auxiliary Gas System P&ID
AX4DB176-2	9.3.5	Auxiliary Gas System P&ID
AX4DB177	9.2.3	Demineralized Water System
AX4DB178	9.2.3	Demineralized Water Makeup System
AX4DB186-3	9.3.1	Instrument and Service Air System
AX4DB190-1	9.2.3	Demineralized Water System
AX4DB190-2	9.2.3	Plant Demineralized Water System
AX4DB195-2	9.5.9	Auxiliary Steam System
AX4DB195-3	9.5.9	Auxiliary Steam System Distribution (Unit 1)
AX4DB195-4	9.5.9	Auxiliary Steam System Distribution (Unit 2)
AX4DB195-5	9.5.9	Auxiliary Steam System Fuel Oil
AX4DB198-1	9.2.4	Potable Water System
AX4DB198-2	9.2.4	Potable Water System
AX4DB198-3	9.3.7	River Water Intake Structures System - Chlorine
AX4DB204-1	9.4.2	Fuel Handling Building Ventilation System
AX4DB204-2	9.4.2	Fuel Handling Building Ventilation System
AX4DB206-1	9.4.1	Control Room HVAC System Level 1
AX4DB206-2	9.4.1	Control Room HVAC System Level 1

TABLE 1.7.1-1 (Sheet 36 of 55)

Drawing Number	Section	Title
AX4DB206-3	9.4.1	Control Room HVAC System Level 1
AX4DB215	9.4.1	Control Building Level 1 HVAC System
AX4DB216	9.4.1	Control Building Cable Spreading Room HVAC System Levels 2 and 3
AX4DB218	9.2.9	Normal Chilled Water System
AX4DB223	9.4.1	Control Building Normal HVAC System Level 2
AX4DB225	9.4.1	Control Building Cable Spreading Room HVAC System Level A
AX4DB231	9.2.9	Normal Chilled Water System
AX4DB232	9.2.9	Normal Chilled Water System
AX4DB235	9.4.1	Onsite Technical Support Center HVAC System
AX4DB237	9.4.1	Control Building Smoke Exhaust System
AX4DB241	9.4.1	Control Building HVAC Equipment Room Levels 3 and 4
AX4DB242-1	9.4.1	Onsite Technical Support Center HVAC System
AX4DB255-1	6.4.3	Control Room HVAC System, Level 1
AX4DB255-3	6.4.3	Control Room HVAC System, Level 1
AX4DB256-1	9.4.1	Control Building Control Room HVAC Flow Diagrams
AX4DB260-1	9.4.2	Fuel Handling Building HVAC Flow Diagram
AX4DB266-2	9.4.1	Control Building Level B HVAC Flow Diagrams
AX4DB269	9.4.1	Control Building Level A HVAC Flow Diagram

TABLE 1.7.1-1 (Sheet 37 of 55)

Drawing Number	Section	Title
AX4DB270	9.4.1	Control Building Cable Spreading Room Levels 2 and 3 HVAC Flow Diagram
AX4DB353(sh. 2)	9.4.3	Radwaste Building Ventilation System
AX4DB355	9.4.3	Radwaste Building Ventilation System
AX4DB376	9.4.1	Onsite Technical Support Center HVAC Flow Diagram
AX4DB378(sh. 2)	9.4.3	Radwaste Building Flow Diagrams
AX4DD300	1.2.2	Plot Plan
AX4DD301	1.2.2	General Arrangement Level 3 Plan - el. 260 ft 0 in.
AX4DD302	1.2.2	General Arrangement Level 2 Plan - el. 240 ft 0 in.
AX4DD303	1.2.2	General Arrangement Level 1 Plan - el. 220 ft 0 in.
AX4DD304	1.2.2	General Arrangement Level A Plan - el. 200 ft 0 in.
AX4DD305	1.2.2	General Arrangement Level B Plan - el. 180 ft 0 in.
AX4DD306-1	1.2.2	General Arrangement Level C Plan - el. 160 ft 0 in.
AX4DD306-2	1.2.2	General Arrangement Levels C and D Plan 143 ft 6 in. and 119 ft 3 in.
AX4DD307	1.2.2	General Arrangement Section A Looking North
AX4DD308	1.2.2	General Arrangement Section B Looking West
AX4DD309	1.2.2	General Arrangement Section C Looking West
AX4DD310	1.2.2	General Arrangement Section D Looking North

TABLE 1.7.1-1 (Sheet 38 of 55)

Drawing Number	Section	Title
AX4DD311	1.2.2	General Arrangement Level 4 Plan - el 280 ft 0 in.
AX4DE350	1.2.2	Transfer Building Equipment Location Plan
AX4DE500	9.1.5	Heavy Load Handling - Alternate Radwaste Transfer Plan Level 1, el. 220 ft 0 in.
AX4DE501	9.1.5	Spent Fuel Cask Bridge Crane, Clearance and Hook Travel Envelope Plan View
AX4DE502	9.1.5	Spent Fuel Cask Bridge Crane, Clearance and Hook Travel Envelope Cross Sections
AX4DJ3101	12.3.3	Typical Layout for Air Cleaning Unit
AX4DJ8004	9A	Fire Areas Radwaste Transfer Building and Alternate Radwaste Building Level 1 Floor Plan el. 220 ft 0 in.
AX4DJ8005	9A	Fire Areas Radwaste Transfer Building Partial Level 1 Floor Plan el. 237 ft 0 in.
AX4DJ8006	9A	Fire Areas Radwaste Transfer Building Level 2 Floor Plan el. 247 ft 0 in.
AX4DJ8007	9A	Fire Areas Auxiliary Building Floor Plan el. 119 ft 3 in., Level D
AX4DJ8008	9A	Fire Areas Auxiliary Building Floor Plan el. 119 ft 3 in., Level D
AX4DJ8009	9A	Fire Areas Auxiliary Building Partial Plans Utility Chase, Levels C and D
AX4DJ8010	9A	Fire Areas Auxiliary Building Floor Plan el. 143 ft 6 in., Level C
AX4DJ8011	9A	Fire Areas Auxiliary Building Floor Plan el. 143 ft 6 in., Level C
AX4DJ8012	9A	Fire Areas Auxiliary Building Floor Plan el. 170 ft 6 in., Level B

TABLE 1.7.1-1 (Sheet 43 of 55)

Drawing Number	Section	Title
AX5DN031-4	7.3.6	Control Room Ventilation Isolation Logic Diagram
AX5DN032-1	7.3.6	Control Room Ventilation Isolation Logic Diagram
AX5DN032-3	7.3.6	Control Room Ventilation Isolation Logic Diagram
AX5DN034-2	7.3.6	Control Room Ventilation Isolation Logic Diagram
AX5DN037-1	7.3.6	Control Room Ventilation Isolation Logic Diagram
AX5DN056-2	7.3.12	Control Building ESF HVAC System Actuation Logic Diagram
AX6DD001	12.3.1	Radiation Zones - Accessibility During Operations - Auxiliary Building Floor Plan, Level D, el. 119 ft 3 in.
AX6DD002	12.3.1	Radiation Zones - Accessibility During Operations - Auxiliary Building Floor Plan, el. 119 ft 3 in.
AX6DD003	12.3.1	Radiation Zones - Accessibility During Operations - Auxiliary Building Floor Plan, Level C, el. 143 ft 6 in.
AX6DD004	12.3.1	Radiation Zones - Accessibility During Operations - Auxiliary Building Floor Plan, Level C, el. 143 ft 6 in.
AX6DD005	12.3.1	Radiation Zones - Accessibility During Operations - Auxiliary Building Floor Plan, Level B, el. 170 ft 6 in.

All other sample lines penetrating the containment are similarly equipped.

Refer to subsection 6.2.4 and table 6.2.4-1.

1.9.12 REGULATORY GUIDE 1.12, REVISION 1, APRIL 1974, INSTRUMENTATION FOR EARTHQUAKES

1.9.12.1 Regulatory Guide 1.12 Position

This guide describes seismic instrumentation acceptable to the NRC for meeting Appendix A of 10 CFR 50.

1.9.12.2 VEGP Position

VEGP conforms to this guide to the extent indicated in table 3.7.4-1 and figure 3.7.4-1.

1.9.13 REGULATORY GUIDE 1.13, REVISION 1, DECEMBER 1975, SPENT-FUEL STORAGE FACILITY DESIGN BASIS

1.9.13.1 Regulatory Guide 1.13 Position

This guide describes a method acceptable to the NRC for designing spent fuel storage facilities for light-water reactors.

1.9.13.2 VEGP Position

Conform, with exception to regulatory position C.7, as the spent fuel pool level indicator alarms in the control room only, and not locally. Additional information is provided in section 9.1.

1.9.14 REGULATORY GUIDE 1.14, REVISION 1, AUGUST 1975, REACTOR COOLANT PUMP FLYWHEEL INTEGRITY

1.9.14.1 Regulatory Guide 1.14 Position

This guide describes a method acceptable to the NRC for minimizing the potential for failures of the flywheels of reactor coolant pump motors in light-water-cooled reactors.

1.9.14.2 VEGP Position - Prelicense

VEGP uses the standard Westinghouse reactor coolant pump design and takes the following position on this guide:

Since the issuance of Regulatory Guide 1.14, Revision 1, the NRC has provided to Westinghouse a copy of draft 2, Revision 2, of Regulatory Guide 1.14. This draft was formulated from industry and concerned parties' comments. It is significant that the draft 2 version incorporates several of the Westinghouse comments on Revision 1. Since draft 2 has not been formally published as Revision 2 of Regulatory Guide 1.14, the exceptions and clarifications (from the original Westinghouse comments) are provided below:

Cross rolling ratio of 1 to 3

Westinghouse's position is that specification of a cross rolling ratio is unnecessary since past evaluations have shown that ASME SA-533, Grade B, Class 1 materials produced without this requirement have suitable toughness for typical flywheel applications. Proper material selection and specification of minimum material properties in the transverse direction adequately ensure flywheel integrity. An attempt to gain isotropy in the flywheel materials by means of cross rolling is unnecessary since adequate margins of safety are provided by both flywheel material selection (ASME SA-533, Grade B, Class 1) and by specifying minimum yield and tensile levels and toughness test values taken in the direction perpendicular to the maximum working direction of the material.

1. C.1 The requirements for the vacuum melting and degassing process or the electroslag process are not essential in meeting the balance of the regulatory position or do they, in themselves, ensure conformance with the overall regulatory position. The initial Safety Guide 14 (October 27, 1971) stated that the "flywheel material should be produced by a process that minimized flaws in the material and improved its fracture toughness properties." This is accomplished by using ASME SA-533 material including vacuum treatment.

   Specification of a cross rolling ratio is considered unnecessary since past evaluations have shown that ASME SA-533, Grade B, Class 1 materials produced without this requirement have suitable toughness for typical flywheel applications. Proper material selection and specification of minimum material properties in the transverse direction adequately ensure flywheel

integrity. An attempt to gain isotropy in the flywheel material by means of cross rolling is unnecessary since adequate margins of safety are provided by both flywheel material selection (ASME SA-533, Grade B, Class 1) and by specifying minimum yield and tensile levels and toughness test values taken in the direction perpendicular to the maximum working direction of the material.

2. C.2 Because the VEGP design specifies a light interference fit between the flywheel and the shaft, at zero speed the hoop stresses and radial stresses at the flywheel bore are negligible. Centering of the flywheel relative to the shaft is accomplished by means of keys and/or centering devices attached to the shaft, and at normal speed, the flywheel is not in contact with the shaft in the sense intended by Revision 1. Hence, the definition of "excessive deformation," as defined in this guide, is not applicable to the design since the enlargement of the bore and subsequent partial separation of the flywheel from the shaft does not cause unbalance of the flywheel. Extensive experience with reactor coolant pump flywheels installed in this fashion has verified the adequacy of the design.

   The combined primary stress levels, as defined in Revision 0 of Regulatory Guide 1.14 (regulatory positions C.2.a and C.2.c) are both conservative and proven and no changes to these stress levels are necessary. Westinghouse designs to these stress limits and thus does not have permanent distortion of the flywheel bore at normal or spin test conditions.

   Paragraph 2.b is considered as delineated. The interpretation removes the ambiguous reference to an undefined overspeed transient.

3. C.3 Conform.

4. C.4 WCAP-8163 shows that the flywheel would not fail at 290 percent of normal speed for a flywheel flaw of 1.15 in. or less in length. Results for a double-ended guillotine break at the pump discharge with full separation of pipe ends assumed, show the maximum overspeed to be less than 110 percent of normal speed. The maximum overspeed was calculated to be about 280 percent of normal speed for the same postulated break, and an assumed instantaneous loss of power to the reactor coolant pump. In comparison with the overspeed

presented above, the flywheel is tested at 125 percent of normal speed at the factory. Thus, the flywheel could withstand a speed up to 2.3 times greater than the flywheel spin test speed of 125 percent provided that no flaws greater than 1.15 in. are present. If the maximum speed were 125 percent of normal speed or less, the critical flaw size for failure would exceed 6 in. in length. Nondestructive tests and critical dimension examinations are all performed before the spin tests. The inspection methods employed provide assurance that flaws significantly smaller than the critical flaw size of 1.15 in. for 290 percent of normal speed would be detected. Flaws in the flywheel will be recorded in the prespin inspection program. Flaw growth attributable to the spin test (i.e., from a single reversal of stress, up to speed and back), under the most adverse conditions, is about three orders of magnitude smaller than that which nondestructive inspection techniques are capable of detecting. For these reasons, no post-spin inspections are performed since the prespin test inspections are considered adequate.

Refer to paragraph 5.4.1.5 for further discussion.

1.9.14.3 VEGP Position - Post License

The VEGP Position - Prelicense applies, except for the flywheel examination requirements of Regulatory Position C.4.b of Regulatory Guide 1.14. Westinghouse WCAP-14535, "Topical Report on Reactor Coolant Pump Flywheel Inspection Elimination," developed by the Westinghouse Owners Group (WOG), presents the basis for relief from the flywheel inspections required by Regulatory Position C.4.b of Regulatory Guide 1.14. The report was submitted to the NRC for review on January 24, 1996 by Duquesne Light Company for application to Beaver Valley Power Station Units 1 and 2. On September 12, 1996, the NRC issued a Safety Evaluation Report (SER) documenting its approval of WCAP-14535. The SER states that the evaluation methodology described in WCAP-14535 is appropriate and the criteria are in accordance with the design criteria of Regulatory Guide 1.14. The final NRC-accepted version of WCAP-14535 was issued as revision A which compiles all relevant correspondence for this matter. In related NRC correspondence, the Commission stated that other utilities may reference WCAP-14535 and its revision when pursuing the alternative flywheel inspections. VEGP Technical

Specification 5.5.7, "Reactor Coolant Pump Flywheel Inspection Program," reflects the alternative examination requirements provided by WCAP-14535A.

1.9.15 REGULATORY GUIDE 1.15, REVISION 1, DECEMBER 1972, TESTING OF REINFORCING BARS FOR CATEGORY I CONCRETE STRUCTURES

1.9.15.1 Regulatory Guide 1.15 Position

Yield strength and tensile strength test procedures are required on reinforcing bars, as well as deformation inspections.

1.9.15.2 VEGP Position

The test procedures and deformation inspections conform with Regulatory Guide 1.15, with the clarification that while ASTM A615-72 is referenced in the regulatory guide, later editions of ASTM A615 may be used. Refer to subsection 3.8.1 for discussion on this subject.

1.9.16 REGULATORY GUIDE 1.16, REVISION 4, AUGUST 1975, REPORTING OF OPERATING INFORMATION - APPENDIX A TECHNICAL SPECIFICATIONS

1.9.16.1 Regulatory Guide 1.16 Position

In addition to the applicable reporting requirements of 10 CFR, this guide provides an acceptable basis for meeting the reporting requirements of Appendix A of the Technical Specifications.

1.9.16.2 VEGP Position

VEGP does not conform with this regulatory guide. In addition to the applicable reporting requirements of Title 10 Code of Federal Regulations, the program for reporting of Units 1 and 2, operating information is in accordance with Generic Letter 97-02, "Revised Contents of the Monthly Operating Report," dated May 15, 1997.

Reporting Requirements are contained within the Technical Specifications.

1.9.17 REGULATORY GUIDE 1.17, JUNE 1973, PROTECTION OF NUCLEAR POWER PLANTS AGAINST INDUSTRIAL SABOTAGE

1.9.17.1 Regulatory Guide 1.17 Position

The requirements and recommendations contained in the proposed ANSI Standard N18.17, Industrial Security for Nuclear Power Plants, dated March 23, 1973, are generally acceptable and, with due consideration for the unique characteristics of the plant and its owner organization, provide an adequate basis for a physical security plan for protection of nuclear power plants against industrial sabotage, subject to the qualifications provided in this guide.

1.9.17.2 VEGP Position

VEGP conforms with ANSI/ANS-3.3-1982, as described in the physical security and contingency plan for the plant.

1.9.18 REGULATORY GUIDE 1.18, REVISION 1, DECEMBER 1972, STRUCTURAL ACCEPTANCE TEST FOR CONCRETE PRIMARY REACTOR CONTAINMENTS

1.9.18.1 Regulatory Guide 1.18 Position

This guide describes an acceptable method of implementing the initial structural acceptance test, which demonstrates the capability of a concrete primary reactor containment to withstand postulated pressure loads.

1.9.18.2 VEGP Position

VEGP conforms with this guide, except with regulatory positions C.3 and C.9 as follows:

1. C.3 Measurement of tangential displacements will not be performed for the 12 points on the largest opening (equipment hatch) of the containment. The magnitude of the expected local tangential deformation under the test pressure conditions is so negligibly small that, combined with the difficulty in obtaining fixed reference lines for local measurements, it is impractical to attempt measurement of local tangential deflections.

2. C.9 It is not intended to schedule structural integrity testing for periods when extremely inclement weather is forecast. Should, despite the forecast, snow, heavy rain, or strong winds occur during the test, the test results will be considered valid unless there is evidence to indicate otherwise.

Refer to subsection 3.8.1 for discussion on this subject.

1.9.19 REGULATORY GUIDE 1.19, REVISION 1, AUGUST 1972, NONDESTRUCTIVE EXAMINATION OF PRIMARY CONTAINMENT LINER WELDS

1.9.19.1 Regulatory Guide 1.19 Position

This guide describes acceptable procedures for performing nondestructive examinations (NDEs) of the welds in the liners and penetrations of primary reactor containments of concrete construction.

1. C.1.b Allows magnetic particle or ultrasonic methods for NDE where radiographic examination is not feasible.

2. C.1.c Requires bubble test solution to be checked hourly.

3. C.7 Acceptance standards should be in accordance with ASME Section III NE-5120.

1.9.19.2 VEGP Position

Conform, with the following exceptions:

1. C.1.b Magnetic particle or liquid penetrant testing of seam welds is performed if radiography is not possible due to weld inaccessibility.

2. C.1.c The bubble test solution will be checked every 4 h.

3. C.7 Acceptance standards are in accordance with ASME Section III, NE-5320 and NE-5350.

Refer to subsection 3.8.1 for further discussion.

1.9.20 REGULATORY GUIDE 1.20, REVISION 2, MAY 1976, COMPREHENSIVE VIBRATION ASSESSMENT PROGRAM FOR REACTOR INTERNALS DURING PREOPERATIONAL AND INITIAL STARTUP TESTING

1.9.20.1 Regulatory Guide 1.20 Position

This guide presents a method acceptable for implementing requirements with respect to the internals of light-water-cooled reactors during preoperational and initial startup testing.

1.9.20.2 VEGP Position

The comprehensive vibration assessment program for the VEGP reactor internals during preoperational and initial startup testing conforms with the recommendations of this guide, as discussed in paragraph 3.9.N.2.4.

1.9.21 REGULATORY GUIDE 1.21, REVISION 1, JUNE 1974, MEASURING, EVALUATING, AND REPORTING RADIOACTIVITY IN SOLID WASTES AND RELEASES OF RADIOACTIVE MATERIALS IN LIQUID AND GASEOUS EFFLUENTS FROM LIGHT-WATER-COOLED NUCLEAR POWER PLANTS

1.9.21.1 Regulatory Guide 1.21 Position

This guide describes programs acceptable to the NRC for measuring, reporting, and evaluating releases of radioactive materials in liquid and gaseous effluents and guidelines for classifying and reporting the categories and curie content of solid wastes.

1.9.21.2 VEGP Position

VEGP conforms with this guide to the extent discussed below and in section 11.5.

The requirement for hourly meteorological data for batch releases will be met if the batch releases are made in a non random manner. If the batch releases are made in a random manner, average annual meteorological parameters will be used for these calculations and the hourly meteorological data will not have to be included in the radioactive effluent reports. This methodology is representative for dose calculations and is less susceptible to errors in data management.

This is in accordance with the Technical Specifications, the ODCM, NUREG 0133, and is standard practice in the nuclear industry.

1.9.22 REGULATORY GUIDE 1.22, FEBRUARY 1972, PERIODIC TESTING OF PROTECTION SYSTEM ACTUATION FUNCTIONS

1.9.22.1 Regulatory Guide 1.22 Position

This guide describes an acceptable method for ensuring that the protection system is designed to permit periodic testing of its functioning during reactor operation.

1.9.22.2 VEGP Position

VEGP conforms with this guide to the extent discussed below and in paragraph 7.1.2.5.

1. D.1 The protection system is designed to permit periodic testing to extend to and include actuation devices and actuated equipment. (See position 4.)

   D.1.a. and b. The periodic tests do duplicate, as closely as practicable, the performance that is required of the actuation devices in the event of an accident. The only actuation devices for which the tests do not completely duplicate the performance that is required in the event of an accident are:

   - The main steam and feedwater isolation valve actuators - full performance testing of these actuators would result in full closure of the main steam and feedwater isolation valves. The transients that would result under power generating conditions in the plant would include steam generator water level oscillations, or low-low steam generator water level, and would probably result in reactor trip. The actuators will be under power generating conditions to verify proper operation of all components required for fast closure of the valves. Operability of the valves may be checked during operation by performing a partial stroke. This partial stroke closes the valves 10 percent (at a slow speed, but by the same mechanism used for fast closure) and then reopened to verify that the valves are free to close. Positive indications are provided on the main control board to verify that the closure mechanism of the valves has been reset

to ensure proper operation after the test. The valve actuators can be fully tested, including full closure at high speed, whenever the plant is not in operation.

- The main turbine trip function - a trip of the main turbine under power generating conditions (unless below approximately 50 percent power) would result in a trip of the reactor. The turbine trip function can be tested whenever the turbine is not in operation.

2. D.2.a. through d. In general, the protection systems can be tested in accordance with method a. The only protection systems that cannot be tested in accordance with method a are the main steam and feedwater isolation system, containment spray system, and the auxiliary feedwater system. The systems not tested in accordance with method a can all be tested in accordance with method b. Methods c and d need not be used.

3. D.3.a. and b. System bypasses are generally not required for testing; in most cases, the actuated equipment actually responds to the test signals. The only exceptions to these criteria are:

   - Bistables - test signals are substituted for the actual plant inputs during bistable tests, and provisions are included for bypassing bistable outputs. The bistables not under test, all digital inputs, and all other portions of the protection system are not affected.

   - Main steam and feedwater isolation valves - the signals to these valves are held in a condition that prevents valve motion during a portion of the test.

   - Each bypass condition is automatically indicated to the reactor operator in the MCR by a separate annunciator for the train in test. Test circuitry does not allow two trains to be tested at the same time so that extension of the bypass condition to the redundant system is prevented.

4. D.4 Where actuated equipment is not tested during reactor operation it has been determined that:

   D.4.a. There is no practicable system design that would permit operation of the equipment without adversely affecting the safety or operability of the plant.

revision of WCAP-8587. The procedures utilized in performing seismic qualification will be in accordance with IEEE Std. 344-1975.

1.9.101 REGULATORY GUIDE 1.101, REVISION 3, AUGUST 1992, EMERGENCY PLANNING FOR NUCLEAR POWER PLANTS

1.9.101.1 Regulatory Guide 1.101 Position

This guide describes a method acceptable to the NRC for complying with regulations for emergency response plans and preparedness at nuclear power plants.

1.9.101.2 VEGP Position

Conform. The VEGP emergency plan, which has been submitted to the NRC, describes how SNC implements NUREG-0654, Criteria for Preparation and Evaluation of Radiological Emergency Response Plans and Preparedness in Support of Nuclear Power Plants. Refer to section 13.3 for further discussion.

1.9.102 REGULATORY GUIDE 1.102, SEPTEMBER 1976, FLOOD PROTECTION FOR NUCLEAR POWER PLANTS

1.9.102.1 Regulatory Guide 1.102 Position

This guide defines acceptable methods of flood protection for nuclear power plants.

1.9.102.2 VEGP Position

The roofs of all safety-related structures are designed to pass probable maximum precipitation (PMP) generated runoff through the use of overflow scuppers as described below. Reservoir routing using the modified Puls technique develops the discharge hydrograph from each roof taking into account inflows from other roofs. Roof drains and 100-year scuppers with downdrains are designed to drain the 100-year storm. For the local intense precipitation analysis, roof drains and 100-year scuppers are considered plugged. Overflow scuppers are considered half plugged to account for possible blockage by ice or debris.

Various combinations of fully opened or half-plugged scuppers are used to develop the maximum ponded depth on each roof and the maximum flow to the yard.

The VEGP is a dry site and conforms with this regulatory guide. Refer to section 3.4 and subsection 2.4.3 for further discussion.

1.9.103 REGULATORY GUIDE 1.103, REVISION 1, OCTOBER 1976, POST-TENSIONED PRESTRESSING SYSTEMS FOR CONCRETE REACTOR VESSELS AND CONTAINMENTS

1.9.103.1 Regulatory Guide 1.103 Position

Defines post-tensioning schemes for containments. The 55-strand VSL tendon system is approved by the NRC.

1.9.103.2 VEGP Position

VEGP utilizes the VSL system and is in conformance with this regulatory guide. Refer to subsection 3.8.1 for discussion on this subject.

1.9.104 REGULATORY GUIDE 1.104, OVERHEAD CRANE HANDLING FOR NUCLEAR POWER PLANTS

Withdrawn.

1.9.105 REGULATORY GUIDE 1.105, REVISION 1, NOVEMBER 1976, INSTRUMENT SETPOINTS

1.9.105.1 Regulatory Guide 1.105 Position

This guide describes a method acceptable to the NRC for complying with regulations with regard to ensuring that the instrumentation setpoints in systems important to safety initially are within and remain within the specified limits.

1.9.105.2 VEGP Position

Conformance is discussed in section 7.1.

requirements specified in Articles CC-1000, CC-2000 and CC-4000 through CC-6000 of the Code for Concrete Reactor Vessels and Containments, ASME Section III, Division 2, 1980 Edition (also known as ACI Standard 359-80), subject to the qualifications provided in this guide.

1.9.136.2 VEGP Position

The VEGP containment design generally conforms to Article CC-3000 of the ASME Code, Section III, Division 2, 1974 through Winter 1975 addenda. Refer to subsection 3.8.1 for further discussion on this subject.

1.9.137 REGULATORY GUIDE 1.137, REVISION 1, OCTOBER 1979, FUEL-OIL SYSTEMS FOR STANDBY DIESEL GENERATORS

1.9.137.1 Regulatory Guide 1.137 Position

The requirements for the design of fuel-oil systems for diesel generators that provide standby electrical power for a nuclear power plant that are included in ANSI N195-1976, Fuel Oil Systems for Standby Diesel Generators, provide a method acceptable to the NRC staff for complying with the pertinent requirements of General Design Criterion 17 of Appendix A to 10 CFR 50, subject to the qualifications identified in the guide.

1.9.137.2 VEGP Position

Conform to Regulatory Guide 1.137 which endorses ANSI N195-1976 with the following clarifications and exceptions.

Clarification to regulatory position C.1.e is as follows:

1. "Section 7.3 of ANSI N195-1976 states that the arrangement of the fuel-oil system "shall provide for inservice inspection and testing in accordance with ASME Boiler and Pressure Vessel Code, Section XI, *Rules for Inservice of Nuclear Power Plant Components*." For those portions of the fuel-oil system for standby diesel generators that are designed to Section III, Subsection ND of the Code, an acceptable method of meeting the requirements of Section 7.3 is to ensure that the system arrangement would allow:

    (1) Pressure testing of the fuel-oil system to a pressure 1.10 times the system design pressure at 10-year intervals...

(2) A visual examination to be conducted during the pressure test for evidence of component leakages, structural distress, or corrosion...."

The diesel fuel oil transfer system is designed, fabricated, erected, and tested to quality standards commensurate with the safety function to be performed. VEGP will perform inservice inspection and testing commensurate with the safety function of the system in accordance with the above defined acceptable methods (1) and (2), not per ASME Section XI. Specifically, the operational readiness of the pumps and valves to meet their intended safety function is maintained in accordance with the VEGP Technical Specifications.

VEGP utilizes Regulatory Guide 1.26 (reference UFSAR paragraph 1.9.26.1) to determine the safety classification of systems and components, and then applies ASME Section XI inspection and testing requirements. ASME Section XI requires that Subsection IWD rules for inservice inspection and testing requirements be applied to those components classified as Class 3, except where the system has been optionally upgraded.

Regulatory Guide 1.26 provides a method for determining acceptable quality standards for safety-related components containing radioactive material, water, or steam but does not require that fuel oil transfer system components be classified as Class 3. Although the fuel oil transfer system was constructed to ASME Section III, Subsection ND (Class 3) per ANSI N195-1976, the original classifications of this system as Class 3 is considered to be an optional upgrade for Section XI purposes, since it is not required to be Class 3 per Regulatory Guide 1.26. Therefore, the diesel fuel oil transfer system is not included in the scope of ASME Section XI.

Exception to regulatory position C.2 is as follows:

1. Regarding Appendix B to ANSI N195-1976, *Recommended Fuel Oil Practices*. Testing of the diesel generator fuel oil will be addressed in the Technical Specifications.

1.9.138 REGULATORY GUIDE 1.138, APRIL 1978, LABORATORY INVESTIGATIONS OF SOILS FOR ENGINEERING ANALYSIS AND DESIGN OF NUCLEAR POWER PLANTS

1.9.138.1 Regulatory Guide 1.138 Position

This guide describes laboratory investigations and testing practices acceptable to the NRC for determining soil and rock properties and characteristics needed for engineering analysis and design for foundations and earthworks for nuclear power plants.

1.9.138.2 VEGP Position

The soil investigations for VEGP were performed prior to the issuance of this guide. Soils testing is described in section 2.5.

1.9.139 REGULATORY GUIDE 1.139, MAY 1978, GUIDANCE FOR RESIDUAL HEAT REMOVAL

1.9.139.1 Regulatory Guide 1.139 Position

This guide describes a method acceptable to the NRC for complying with regulations with regard to the removal of decay heat and sensible heat after a reactor shutdown.

1.9.139.2 VEGP Position

VEGP design was reviewed and modified to provide safety-grade cold shutdown in accordance with this guide, as described in subsection 5.4.7.

RHR outlet Instrument Society of America (ISA) check valves are in conformance with regulatory position C.2 except that they will be tested once every refueling.

1.9.140 REGULATORY GUIDE 1.140, REVISION 1, OCTOBER 1979, DESIGN, TESTING, AND MAINTENANCE CRITERIA FOR NORMAL VENTILATION EXHAUST SYSTEM AIR FILTRATION AND ADSORPTION UNITS OF LIGHT-WATER-COOLED NUCLEAR POWER PLANTS

1.9.140.1 Regulatory Guide 1.140 Position

This guide describes acceptable methods of implementing regulations with regard to the design, testing, and maintenance criteria for air filtration and adsorption units designed to collect airborne radioactive materials during normal operation, including anticipated operational occurrences.

1.9.140.2 VEGP Position

Conform, except as discussed below.

C.3.f Duct stiffener angles are attached to the duct by mechanical fasteners (huck bolts) or by welding.

C.4.b The steam packing exhauster filtration system does not meet Regulatory Guide 1.140 spacing criteria between filter components. Since the system is operated only when high radiation is present, maintenance will only be required on a minimal basis. The physical location in which the filtration unit is installed has limited, but adequate, space availability.

The in-place testing of the HEPA filter and charcoal adsorber for the containment preaccess filter system is performed initially at acceptance testing and after subsequent filter or charcoal replacement. As discussed in FSAR paragraph 9.4.6.2.3, the preaccess filter system is a recirculating, nonducted system inside containment that reduces airborne contamination inside containment prior to personnel entry. Leakage through the HEPA or charcoal adsorber would not contribute to any increased radiological release to the environment.

C.6.a New, activated, impregnated carbon is tested per Table 5-1 of ANSI N509-1980, except that the performance requirements shall be 0.5-percent penetration maximum when tested with molecular iodine per ASTM D3803 at 30°C and 95-percent relative humidity, and 50-percent penetration maximum when tested with methyl iodide per ASTM 3803 at 30°C and 95-percent relative humidity.

C.6.b Used carbon samples taken for laboratory testing shall meet the acceptance criteria of greater than or equal to 90 percent when tested with methyl iodide at 30°C and 70-percent relative humidity.

Wherever ANSI N509-1976 is referenced in the regulatory guide, conformance is with ANSI N509-1976, ANSI N509-1980, or ASME N509-1989 depending on the date of the applicable purchase order. Conformance may be with a particular revision when specifically called out in the corresponding specification. In addition, the fan peak pressure test delineated in paragraph 5.10.8.2 of ANSI N509-1980 will not be performed since two separate interlocks are provided to preclude overpressurization of the ducting.

Wherever ANSI N510-1975 is referenced in the regulatory guide, conformance is with ANSI N510-1975, ANSI N510-1980, or ASME N510-1989 depending on the date of the applicable purchase order.

Conformance may be with a particular revision when specifically called out in the corresponding specification.

The dry active waste processing building HVAC system is only subject to the in-place testing criteria for the exhaust HEPA filter.

1.9.141 REGULATORY GUIDE 1.141, APRIL 1978, CONTAINMENT ISOLATION PROVISIONS FOR FLUID SYSTEMS

1.9.141.1 Regulatory Guide 1.141 Position

The requirements and recommendations for containment isolation of fluid systems that penetrate the primary containment of light-water-cooled reactors as specified in ANSI N271-1976, Containment Isolation Provisions for Fluid Systems, are generally acceptable and provide an adequate basis for complying with the pertinent containment isolation requirements of Appendix A to 10 CFR 50, subject to the qualifications identified in the guide.

1.9.141.2 VEGP Position

VEGP conforms as discussed in subsection 6.2.4.

1.9.142 REGULATORY GUIDE 1.142, OCTOBER 1981, REVISION 1, SAFETY-RELATED CONCRETE STRUCTURES FOR NUCLEAR POWER PLANTS (OTHER THAN REACTOR VESSELS AND CONTAINMENTS)

1.9.142.1 Regulatory Guide 1.142 Position

This guide endorses the procedures and requirements described in American Concrete Institute (ACI) 349-76 subject to the qualifications provided in this guide.

1.9.142.2 VEGP Position

ACI 318-71 is used in lieu of ACI 349-76; but ACI 349-76, including Appendix B, may be utilized subject to the qualifications provided in Regulatory Guide 1.142.

Refer to subsections 3.8.3, 3.8.4, and 3.8.5 for discussion on this subject.

1.9.143 REGULATORY GUIDE 1.143, REVISION 1, OCTOBER 1979, DESIGN GUIDANCE FOR RADIOACTIVE WASTE MANAGEMENT SYSTEMS, STRUCTURES, AND COMPONENTS INSTALLED IN LIGHT-WATER-COOLED NUCLEAR POWER PLANTS

1.9.143.1 Regulatory Guide 1.143 Position

This guide furnishes design guidance acceptable to the NRC regarding seismic and quality group classification and quality assurance provisions for radioactive waste management systems, structures, and components.

1.9.143.2 VEGP Position

Conform, with the following clarifications:

- Radioactive waste management systems, structures, and components are classified in table 3.2.2-1.
- ACI 318-71 is used for design of concrete structures in lieu of ACI 318-77.
- Flexible, nonmetallic hoses with couplings are utilized in the alternate radwaste building for connecting various portable processing equipment.
- Portable washer/dryer and associated connections utilized in health physics laundry room.

See section 11.4 for further discussion.

1.9.144 REGULATORY GUIDE 1.144, REVISION 1, SEPTEMBER 1980, AUDITING OF QUALITY ASSURANCE PROGRAMS FOR NUCLEAR POWER PLANTS

1.9.144.1 Regulatory Guide 1.144 Position

The requirements that are included in ANSI/ASME N45.2.12-1977 for auditing QAPs for nuclear power plants are acceptable to the NRC staff and provide an adequate basis for complying with the pertinent quality assurance requirements of Appendix B to 10 CFR 50, subject to the qualifications identified in the guide.

1.9.144.2 VEGP Position

The VEGP QAP for the design and construction phase conforms with Regulatory Guide 1.144, January 1979, which also endorses

ANSI/ASME N45.2.12-1977, subject to qualification identified in the guide, with the following clarifications. VEGP does not conform to the latest revision of the following ANSI standards: ANSI N45.2, ANSI N45.2.9, and ANSI N45.2.10. VEGP conforms to ANSI N45.2-1971, ANSI N45.2.9 (Draft 11, Revision 0, January 17, 1973), and ANSI N45.2.10-1973. The VEGP quality assurance program is described in section 17.1, appendix 17A, and appendix 17C.

VEGP QAP for operations conforms with Regulatory Guide 1.144 with the following clarification. VEGP does not conform to the latest revisions of the following ANSI standards: ANSI N45.2, ANSI N45.2.9, and ANSI N45.2.10. VEGP conforms to ANSI N45.2-1971, ANSI N45.2.9-1974, and ANSI N45.2.10-1973. Conformance to Regulatory Guides 1.28, 1.74, and 1.88 is indicated in this section. The VEGP quality assurance program is described in chapter 17.

1.9.145 REGULATORY GUIDE 1.145, AUGUST 1979, ATMOSPHERIC DISPERSION MODELS FOR POTENTIAL ACCIDENT CONSEQUENCE ASSESSMENTS AT NUCLEAR POWER PLANTS

1.9.145.1 Regulatory Guide 1.145 Position

This guide identifies acceptable methods for:

- Calculating atmospheric relative concentration (χ/Q) values.
- Determining χ/Q values on an overall site basis.
- Determining χ/Q values on a directional basis.
- Choosing χ/Q values to be used in evaluations of the types of events described in Regulatory Guides 1.3 and 1.4.

1.9.145.2 VEGP Position

Conform. Refer to subsection 2.3.4.

1.9.146 REGULATORY GUIDE 1.146, AUGUST 1980, QUALIFICATION OF QUALITY ASSURANCE PROGRAM AUDIT PERSONNEL FOR NUCLEAR POWER PLANTS

1.9.146.1 Regulatory Guide 1.146 Position

This guide describes a method acceptable to the NRC for complying with regulations with regard to qualification of QAP audit personnel for nuclear power plants.

1.9.146.2 VEGP Position

Conform. The QAP is discussed in chapter 17.

1.9.147 REGULATORY GUIDE 1.147, REVISION 10, JULY 1993, INSERVICE INSPECTION CODE CASE ACCEPTABILITY, ASME SECTION XI, DIVISION 1

1.9.147.1 Regulatory Guide 1.147 Position

This regulatory guide lists those Section XI ASME code cases that are generally acceptable to the NRC for implementation in the ISI of light-water-cooled nuclear power plants.

1.9.147.2 VEGP Position

Conform. Refer to section 6.6 for further discussion.

1.9.148 REGULATORY GUIDE 1.148, MARCH 1981, FUNCTIONAL SPECIFICATION FOR ACTIVE VALVE ASSEMBLIES IN SYSTEMS IMPORTANT TO SAFETY IN NUCLEAR POWER PLANTS

1.9.148.1 Regulatory Guide 1.148 Position

This guide delineates a procedure acceptable to the NRC for implementing regulations with respect to the detailed specification of information pertinent to defining operating requirements for active valve assemblies in light-water-cooled nuclear power plants.

1.9.148.2 VEGP Position

Conformance is addressed in table 3.9.B.3-10.

1.9.149 REGULATORY GUIDE 1.149, APRIL 1987, NUCLEAR POWER PLANT SIMULATION FACILITIES FOR USE IN OPERATOR LICENSE EXAMINATIONS

1.9.149.1 Regulatory Guide 1.149 Position

This regulatory guide describes a method acceptable to the NRC for specifying the functional requirements of a nuclear power plant simulator to be used for operator training.

1.9.149.2 VEGP Position

Conform with exceptions as described by subsection 13.2.1.

1.9.150 REGULATORY GUIDE 1.150, FEBRUARY 1983, ULTRASONIC TESTING OF REACTOR VESSEL WELDS DURING PRESERVICE AND INSERVICE EXAMINATIONS

1.9.150.1 Regulatory Guide 1.150 Position

This guide describes a method for volumetric examination of reactor vessel welds.

1.9.150.2 VEGP Position

Conform to the extent practicable. See subsection 5.2.4.

1.9.155 REGULATORY GUIDE 1.155, AUGUST 1988, STATION BLACKOUT

1.9.155.1 Regulatory Guide 1.155 Position

This regulatory guide describes a means acceptable to the NRC staff for meeting the requirements of 50.63 of 10 CFR Part 50 for station blackout coping. NUMARC 87-00 also provides guidance acceptable to the staff for meeting these requirements.

1.9.155.2 VEGP Position

Conform. See section 8.4.

1.9.163 REGULATORY GUIDE 1.163, SEPTEMBER 1995, PERFORMANCE-BASED CONTAINMENT LEAK-TESTING PROGRAM

1.9.163.1 Regulatory Guide 1.163 Position

This regulatory guide provides guidance on an acceptable performance-based leak-test program, leakage-rate test methods, procedures, and analysis that may be used to comply with the performance-based Option B in 10 CFR Part 50, Appendix J.

1.9.163.2 VEGP Position

Conform with the following exceptions:

1. Leakage rate testing for the containment purge valves with resilient seals is performed once per 18 months in accordance with the Limiting Condition of Operation of Technical Specification 3.6.3, Surveillance Requirements 3.6.3.6 and 3.0.2.

2. Containment personnel air lock door seals will be tested prior to reestablishing containment integrity when the air lock has been used for containment entry. When containment integrity is required and the air lock has been used for containment entry, door seals will be tested at least once per 30 days during the period that containment entry(ies) is (are) being made.

52. Stoker, H. S. and Spencer, S. L., Environmental Chemistry: Air and Water Pollution, Scott, Foresman and Company, Glenview, Ill., 1976.

53. Southeastern Forest Experiment Station, U.S. Forest Service Letter, dated July 16, 1984.

54. Turner, D. B., Workbook of Atmospheric Dispersion Estimates, Public Health Service, Cincinnati, Ohio, 1970.

55. Briggs, G. A., Plume Rise, U.S. Atomic Energy Commission, 1969.

56. Feldner, R. M. and Rousseau, R. W., Elementary Principles of Chemical Processes, John Wiley and Sons, New York, 1978.

57. Fire Protection Handbook, Sixteenth Edition, National Fire Protection Association (NFPA), Quincy, Massachusetts, 1986.

58. Nalco Chemical Company, NALCO 1318/1338 Liquid Material Safety Data Sheets.

59. Nalco Chemical Company, NALCO 94UF193 Liquid Material Safety Data Sheets.

TABLE 2.2.3-18 (SHEET 5 OF 6)

Chemical	State	Quantity	Distance (ft)	Notes
Zinc Salt (NALCO 1360)	Liquid, ambient conditions	One 5000-gal tank(g)	1380	(c)
Methoxypropyl-amine (NALCO 94UF193)	Liquid, ambient conditions	One 400-gal tank (k)	80	(a)
Sodium nitrite (CALGON LCS60)	Liquid, ambient conditions	One to ten 55-gal drums (at each of five locations) (h)	75 400	(d)
Sodium hypochlorite	Liquid, ambient conditions	One 500-gal transport tank (i)	>3000 615	(d)
		One 250-gal tank	720	
		Three 6500-gal tanks	1380	
Trisodium phosphate	Solid, ambient conditions	Three baskets with a total of 220 ft^3 to 260 ft^3	N/A	(j)
Bromine salt (hypobromous acid is a combination of bromine salt and sodium hypochlorite)	Liquid (ambient conditions)	One 6800-gal tank (maximum)	1380	(c)

a. Limiting case which results in maximum control room concentration and is analyzed as described in paragraph 2.2.3.1.4.3. Results of analysis are presented in table 2.2.3-20.

b. This case is not limiting. It results in lower control room concentrations.

c. Not analyzed since this material is nonvolatile.

d. Not analyzed since this material is nontoxic.

TABLE 2.2.3-18 (SHEET 6 OF 6)

e. Not analyzed since this material is stored in quantities less than 100 lb.

f. Not analyzed since this material is stored in underground tanks and no significant spill can occur.

g. A small number of 55-gal drums may be stored near the circulating water chemical injection building for emergency use.

h. The 55-gal drums are located at ACCW, CCW, essential chilled water, normal chilled water (all located 75 feet away from the control room) and diesel generator building (400 feet away from the control room).

i. One 500-gal transport tank services the river intake and NSCW systems. The control room is approximately 3000 feet away from the river intake and approximately 615 feet away from the NSCW system.

j. The three trisodium phosphate baskets are located inside containment and isolated from the control room.

k. One 400-gal tank is present in both the Unit 1 and Unit 2 turbine building. Closest approach distance to control room from tank in transport is approximately 80 ft.

TABLE 2.2.3-20

TOXIC GAS RELEASE INFORMATION

Chemical	Toxicity[a] Limit (ppm)	8-h Average[b] Concentration (ppm)	Release[c] Type	Maximum[b,d] Release Rate (gm/s)	Fraction Flashed to Vapor	Vapor[e] Pressure (mm Hg)	Odor[f] Detection (ppm)	Control Room Concentration 2-min After Detection (ppm)[b]
Ammonia (29%)	500[10]	N/A	N	11.627×10^3	N/A	474	50	275
Carbon dioxide	5000	4039	L	7.193×10^4	0.13	(e)	N/A	N/A
Fuel oil no. 2	300[g]	1.3	N	4.749×10^{-1}	N/A	0.408	N/A	N/A
Halon 1301	70,000[29]	999	L	N/A	1.0	(e)	N/A	N/A
Hydrazine (35%)	30[42]	N/A	N	3.692×10^1	N/A	9.2	4	12.9
Hydrogen - liquid[i]	143,000	3201	L	1.18×10^5	0.0	(e)	N/A	N/A
Nitrogen - liquid	143,000	5034[h]	L	4.466×10^5	0.002	(e)	N/A	N/A
Nitrogen - gas	143,000	2772	G	N/A	1.0	(e)	N/A	N/A
Sulfuric acid	0.25	0.16	N	8.270×10^{-2}	N/A	0.005	N/A	N/A
Sulfur dioxide	5	1.1	G	N/A	1.0	(e)	N/A	N/A
Gasoline	500	37.91	N	2.1×10^1	N/A	620	N/A	N/A
Methoxypropylamine (30%)	5[59]	1.5	N	10.9	N/A	20	<1	N/A

a. The 2-min toxicity limit is presented for ammonia and hydrazine only. The long term (8-h average continuous exposure) toxicity limit is presented for all other materials. All values are from reference 43 unless otherwise noted.

b. At worst case windspeed.

c. N = normal boiling point liquid (boiling point > ambient temperature). Continuous release scenario. L = low boiling point liquid or liquefied compressed gas (boiling point < ambient temperature). Puff release plus continuous release scenario. G = compressed gas release. Puff release scenario.

d. Continuous release rate for normal boiling point liquids. Boiloff rate for low boiling point.

e. Vapor pressure not used in analysis of low boiling point liquids or compressed gases.

f. The odor detection limit is only presented for ammonia and hydrazine since the analysis considers control room concentrations 2 min after odor detection.

g. The value for gasoline is used since toxicity limits for fuel oil have not been established.

h. Assumes a 9000 gallon liquid tank at 274 meters.

i. The liquid hydrogen tank has been removed and the hydrogen requirements are supplied by a tube trailer. The quantity of hydrogen in the tube trailer is less than the quantity the original installed tank held; therefore, the concentration envelopes the tube trailer quantity.

gal/min/ft of drawdown. In July 1989, well CW-1 was filled with sand and concrete and then abandoned. A third well, CW-3, producing from the Tertiary aquifer provided potable water for the nuclear operations garage. The construction wells are shown on drawing AX6DD332. A summary of the well data are on table 2.4.12-7D.

2.4.12.1.3.3 Wells and Well Field Design. During normal operation of the plant, the ground water supply is provided by one makeup well, with other makeup wells on standby. There are two makeup wells (MU-1 and MU-2A) and one alternate makeup well (TW-1). The two wells (MU-1 and MU-2A) are each capable of producing 2000 gal/min on a continuous basis for the life of the plant. The alternate well (TW-1) is capable of producing 1000 gal/min on a continuous basis for the life of the plant.

Wells TW-1 and MU-2 were constructed as a test well and a makeup well, respectively. Well MU-2 was utilized for construction water, but due to a design change, its location interfered with other facilities. Therefore, it was replaced by well MU-2A. The test well (TW-1) was originally drilled and tested to provide design data for the makeup well field. Wells TW-1 and MU-2 were capped and utilized as observation wells to monitor the Cretaceous aquifer until 1995. Beginning in 1999, well TW-1 became the alternate makeup water source, limited to 1000 gal/min. Initial use of this well, due to its location near Category 1 structures, includes reading of settlement markers for structures near the well to confirm that drawdown does not affect these structures' settlement.

The two plant makeup water wells (MU-1 and MU-2A) are constructed as gravel pack wells extending to depths of 830 ft and 800 ft, respectively, and are open to selected aquifer zones below a depth of 435 ft. Well casing to a depth of 250 ft in MU-1 and 282 ft in MU-2A is 16 in. nominal diameter; below that depth the casing and screen are 10-in. nominal diameter. To prevent movement of water between the aquifers above and below the marl the well bores were enlarged to 34-in. in diameter to a depth of 160 ft in MU-1 and 98 ft in MU-2A, and 26-in. nominal diameter well casings were set at these depths. The annular space between the hole wall and casing was filled with grout to provide the seal. The alternate plant makeup water well (TW-1) is constructed as a gravel pack well extending to a depth of 860 ft and is open to selected aquifer zones below a depth of 450 ft. Well casing to a depth of 91 ft in TW-1 is 28-in. nominal diameter. A second casing 16-in. nominal diameter extends to 250-ft depth. A third casing and screen is 10-in. nominal diameter, and extends to 850-ft depth. To prevent movement of water between the aquifers above and below the marl, the well bore was enlarged to 34-in. diameter to a depth of 91 ft. The annular space between the hole wall and upper casing was filled with grout to provide the seal.

Well design criteria, including the well screen openings, are based on data collected in the drilling and testing of the initial test well (TW-1). The basic design criteria for the wells are as follows:

A. Allowing for pumping well interference and fluctuations of water levels caused by increased use of ground water and climatic changes, wells MU-1 and MU-2A can be pumped continuously at their rated capacity for the life of the plant.

B. Minimum construction specification is the American Water Works Association standard for deep wells (standard AWWA A-100).

C. The wells are lined with steel casing of sufficient strength to carry the stress loads anticipated during operation of the plant.

D. The well screen is a wire-wound type fabricated of stainless steel stock and has sufficient strength to carry anticipated stress loads. Screen openings are 0.04 in., as determined from size analyses of the aquifer materials and design of the gravel filter pack. Length of screen provides sufficient open area to reduce entrance velocities to less than 4 ft/min and to avoid migration of fine material into the wells.

E. Gravel pack material is clean washed and graded sand and gravel consisting of sizes (selected with reference to the aquifer materials) which provide an efficient filter without restricting movement of water to the well.

F. Allowance is made for potential corrosion (electrolytic and chemical) to ensure sufficient strength and integrity of the casing and screen during the life of the wells.

G. A grout seal is placed in the annular space between the 34-in.-diameter hole wall and the 26-in.-diameter surface casing to a minimum depth of 160 ft in MU-1 and 98 ft in MU-2A. Grout was placed in one continuous operation by placing a tremie pipe inside the annulus and filling the annular space from the bottom up.

The two plant makeup wells provide a well field system that was designed to consider the factors of pumping well interference, fluctuations of water levels caused by climatic changes, and future increased use of ground water and to preclude possible subsidence of plant foundations from drawdown of piezometric levels caused by pumping cones of depression.

A well to supply water for irrigation purposes, IW-4, was added in 1989. This well was drilled to a depth of 370 ft and a 4-in. PVC screening was installed to a depth of 370 ft. The well produces water from the Tertiary aquifer with a maximum pump capacity of 120 gal/min. A well for potable water supply to the security tactical training facility, SW-5, was added in 1990. This well was drilled to a depth of 200 ft and a 2-in. PVC screening was installed to a depth of 200 ft. The well produces water from the Tertiary aquifer with a maximum pump capacity of 20 gal/min. The locations of the water supply wells are shown on drawing AX6DD332. A summary of the water supply well data is in table 2.4.12-7D.

2.4.12.1.3.4 Temporary Dewatering. Construction of the foundations at VEGP required excavation of the Eocene and younger sands, silts, and clays of the unconfined aquifer from about el 216 ft to el 130 ft. The portion of the excavation below the water table elevation of the unconfined aquifer (approximately el 160 ft) was dewatered during excavation by a series of ditches oriented in an east- west direction and connected by a north-south ditch, which drained to a sump in the southwest corner of the excavation. The sump was equipped with four pumps with a capacity of 500 gal/min each to remove inflows from ground water. Additional capacity was provided for the removal of inflows of storm water into the excavation.

The ditch and sump approach was successful when the invert elevation of the ditches was maintained at 15 to 20 ft below the adjacent grade. This permitted the use of conventional excavation procedures in reasonably dry materials.

Upon reaching the marl, the system of ditches and sump was replaced by a perimeter drainage system as shown on drawing AX6DD324. This consisted of a porous concrete pipe around the perimeter of the power block excavation feeding into three sumps at the toe of the south slope. Water pumped from the sumps was discharged to debris basin 1 southeast of the power block. The porous concrete pipe was encased in a granular filter material which was carried up the surface of the adjacent 2 to 1 slope to about el 160 ft. This filter blanket was placed so that there was a minimum of 4 ft of filter material measured horizontally from the face of the slope out to the face of the filter blanket as shown on drawing AX6DD324.

The construction dewatering system, i.e., the filter blanket and porous concrete perimeter drain, was designed to prevent ground water from entering the power block excavation during construction operations. In this regard, it performed properly throughout the construction period. However, the system was not adequate to drain excessive rainfall which accumulated in compacted fill. The Category 1 backfill program necessarily proceeded in steps and stages that were commensurate to the

gradual rise of structure walls. Fill was placed and compacted to thicknesses ranging from a few feet to a few tens of feet above the marl and then left as a functional surface to await the next stage of structure wall construction. In the interim, rainfall penetrated the fill, percolated to the marl layer, and accumulated to a fairly constant level in the same manner that a perched water table develops over a clay layer. In some areas the water rose to a level very close to the top of the fill, precluding further backfilling on that surface. In addition to near-surface saturation at various locations, there was seepage from the face of the slopes of the compacted fill which rested on the marl bearing surface. This condition precluded backfilling against these slopes.

The conditions described above were relatively minor and caused no major delays or problems until November 2, 1979. On that date almost 6 in. of rain fell at the site, causing severe surface erosion of slopes and rapid saturation of the more shallow fill areas. As a result of the additional water, it was necessary to implement a supplemental dewatering system so that backfill operations could continue. Along with the dewatering system, slope repair and settlement monitoring plans were also implemented. The remedial program was completely successful and is described fully in reference 6.

2.4.12.1.3.5 Chemical Quality of Water. Several samples of ground water and surface water were taken for chemical analysis to determine the quality of water in the area, to identify characteristics of the different aquifer water, and to determine any correlation between ground water and surface water. Tables 2.4.12-3 through 2.4.12-6 list analyses of water samples from observation wells, domestic wells, plant water supply wells, springs, and surface waters. Locations of sample points are shown on drawings AX6DD323, AX6DD325, and AX6DD332.

Water samples were collected in October 1971 from both the water table aquifer and the confined aquifer from observation wells set in each system. Additional water samples were collected from the construction and makeup water wells at various times from 1977 to 1985.

Overall, the ground water of the area is calcium and calcium-sodium bicarbonate types, with total dissolved solids less than 200 ppm. Samples of ground water from the confined aquifer system contain from 110 to 194 ppm total dissolved solids, and sodium is the dominant cation. Ground water from the water table aquifer system is more variable in total dissolved solids;

analyzed samples for the system ranged from 20.0 ppm (spring 2, table 2.4.12-5) to 169.5 ppm (well 143, table 2.4.12-3). Sodium is again the dominant cation. The variation in total dissolved solids is probably related to the length of time the water has remained in the ground, since more time allows more leaching of solids.

The surface water is low in total dissolved solids (less than 100 ppm), with calcium and magnesium as the dominant cations. Bicarbonate is the dominant anion. The highest total dissolved solids were measured at Mathes Pond where solutioning of calcite in the shell zone is believed to be the major source of cations.

2.4.12.2 Sources

2.4.12.2.1 Present Ground Water Use

Large quantities of water are stored in the confined aquifers underlying the region of the plant site, and to date relatively small withdrawals have occurred. Although many small communities derive water from wells, the draft on the aquifers is low because of the low population density, limited industrial developments, only moderate need for crop irrigation (due to high rainfall), and abundant surface waters.

The largest withdrawal of ground water in the region is concentrated in the Savannah area, 80 miles southeast of the VEGP site, near the Atlantic Coast. Ground water is extracted principally from limestone beds of the Ocala Group of upper Eocene age. Heavy pumping from a relatively small area has caused a large, deep cone of depression to form. Recharge to the aquifer in the vicinity of Savannah may eventually stabilize the cone but the hydrograph of well CHA 84, drawing AX6DD326, indicates a continued decline through the year 1979.

Closer to the VEGP site, the principal withdrawal of ground water is from the Tuscaloosa aquifer (i.e., the Cretaceous system) at the Department of Energy Savannah River Project facilities. Pumping of ground water for these facilities began in the early 1950s to supply water for construction. Since then, ground water extractions have continued for operational purposes, although the amounts have been considerably less than was originally anticipated. As reported by Savannah River Project personnel, ground water extractions have remained relatively constant at about 5000 gal/min. These withdrawals will have no effect on ground water conditions at VEGP.

Sylvania is one of the few communities in the vicinity of the VEGP site that derives its water supply from ground water. Located approximately 30 miles south-southeast of the site, the Sylvania wells withdraw water from the Tertiary aquifer. Water level history is shown on the hydrograph for Screven well 3 (drawing AX6DD326). Although short-term trends are indicated, no aquifer dewatering or change in storage of ground water is evident over the period of record, except for a slight decline in the late 1970s.

The city of Augusta is the nearest large municipality. Small domestic wells are present there, and a few large industries have wells that extract water from the recharge area of the Tuscaloosa Formation. The main source of municipal supply, however, is drawn from the Savannah River.

The area of Richmond County south of Gordon Highway is served by the Richmond County Water and Sewer Authority. The service area for the authority is about 12 mi^2 and serves about 15,000 customers from 18 wells, most of which are in the southern part of the county. The wells average 200 ft in depth and can produce about 750 gal/min each from the Tuscaloosa aquifer. Approximately 9.4 Mgal/d are used throughout the service area.

The area around McBean (located about 13 miles northwest of the site) is served by the Pine Hill Water Authority. The authority has five wells, three of which are operable, that draw water from Cretaceous sands of the Tuscaloosa aquifer. Total depth of each of the wells is about 450 ft, and the wells are distributed throughout the service area, which has about 2200 customers. The USGS has begun monitoring one of the wells to provide a record of future trends of water levels in the area.

Ground water use in eastern Burke County was determined by an extensive well canvass performed during the site exploration phase and supplemented by the Millett fault study of 1982.[7] The well survey data indicate ground water use is almost exclusively for domestic needs. Small amounts are used for stock, and there are a few small commercial buildings in the communities served by municipal wells. Except for VEGP there are no known industrial, irrigation, or similar activities requiring continuous withdrawals of large quantities of ground water.

The only incorporated community within 10 miles of the plant site is the town of Girard, with a population of about 250. Although 12 private wells were in use in the recent past, these were abandoned when city water service lines were installed. City water is supplied from two wells producing from the Tertiary aquifer.

Sardis is a community 12 miles due south of the site. It is larger than Girard (population of 830), and the community water supply is provided by three wells open to the Tertiary aquifer with pumping capacities from 300 to 500 gal/min. Two of the wells are for standby and fire protection purposes. The 1000 customers are predominantly domestic users.

The many private wells in eastern Burke County are small, with a maximum capacity of less than 10 gal/min. The average of each well is estimated to be less than 0.5 gal/min.

2.4.12.2.2 Projected Future Ground Water Use

In 1965 and 1966, the Central Savannah River Area Planning and Development Commission conducted a regional investigation of present and future water and waste disposal needs. According to this survey, the population of eastern Burke County is expected to reach approximately 2800 by the year 1986. That is when the Augusta-Savannah Industrial Corridor is scheduled to extend into Burke County with a concomitant increase in water requirements to 540,000 gal/d. A large portion of this increase will be for industrial uses, and the source will be primarily from the Savannah River.

There is little anticipation of any substantial change in the agricultural development of the area. Assuming that present water requirements are primarily for domestic use and are derived from ground water, future increases in ground water use can be assumed to be correlative to the population.

The Richmond County Water Authority currently has a capacity of about 13 Mgal/d. By the year 2000 they estimate that their capacity will be enlarged to 18.5 Mgal/d based on annual growth of about 500 customers per year.

2.4.12.2.3 Water Levels and Ground Water Movement

A ground water monitoring program to determine the direction of ground water movement and the piezometric levels of the aquifers was established at the VEGP site with the first exploration work in 1971. That program has included an array of observation wells open to the water table aquifer above the Blue Bluff marl, and an array of wells open to the confined Tertiary aquifer immediately below the marl (in the unnamed sands of the Lisbon Formation). Two wells open to the Cretaceous (Tuscaloosa) aquifer were added to the monitoring program in 1985.

Special observation wells were installed to provide data on the distribution of hydrostatic pressure across the marl. Other special wells include a series of short-lived construction "piezometers" that were installed in the backfill as it was placed around the power block complex. They were utilized to assure the water table in the backfill was far enough below the surface to achieve effective compaction.

The initial array of observation wells installed during the exploration period 1971 through 1972 included several wells located in areas of plant construction. These were destroyed and sealed as required by the construction schedule, and when possible, replaced after the construction was completed.

Additional wells have been installed to provide an effective system to monitor ground water during plant operation as needed. A complete list of all observation wells, both active and inactive, is on tables 2.4.12-7A through 7C.

2.4.12.2.3.1 Observation-Well Monitoring. The original observation wells installed in 1971-1972 included 16 open to the water table aquifer, 10 open to the confined aquifer, and two monitoring hydrostatic pressure in the marl. This array remained until July 1974 when site grading and excavation for the power block commenced. A majority of the wells were terminated at that time to make way for construction. All activity at the site was interrupted three months later, September 1974.

Resumption of construction, which began in 1976, required dewatering the power block excavation. The dewatering continued, uninterrupted, until March 1983. As construction progressed, more wells had to be terminated. Only 3 of the original 16 observation wells open to the water table aquifer remain intact November 1985. Of the original 10 wells open to the confined aquifer, 2 remain. Other wells have been installed periodically to replace those destroyed by construction.

During the period September 1971 through March 1972, water levels in observation wells at VEGP were monitored by Law Engineering Company at least biweekly and, commonly, more frequently. No water level measurements were made between April 1972 and April 1973. Georgia Power Company personnel commenced monitoring on a quarterly basis in April 1973. Monitoring was again stopped July 1974 when site grading and excavation for the power block began. Monitoring was not resumed until June 1979, at which time quarterly measurements of all existing wells was again initiated.

Dewatering of the power block excavation was in effect from June 1976 through March 1983. Hence, water levels in observation wells of the water table aquifer during this period were

influenced by construction dewatering. Daily readings were made in observation wells 800 and 802 during the period December 11, 1980, through September 15, 1982, as part of the monitoring conducted for placement of the backfill around the power block structures. Temporary wells were installed to monitor the saturated level in the backfill as it was being placed to assure proper compaction.

In July 1985, a program of frequent measurement of water table wells was implemented. The purpose of this program was to provide more detailed information to support the basis for the hydrostatic loading design (see section 2.4.12.4). Locations of the wells in this program are shown on drawings AX6DD333, AX6DD334, and AX6DD335. Additional water-table observation wells were installed in the backfill adjacent to the power block structures and several previously destroyed wells were replaced. There were 17 wells monitoring the water-table aquifer. A series of 6 Casagrande-type piezometers have been set in the Blue Bluff marl to monitor the hydrostatic pressure. They were in two clusters of 3 piezometers each, located on the northwest and southeast side of the power block. The piezometers in each cluster monitor pore pressure in the upper, middle, and lower portions of the marl. In addition, monitoring of the 10 Tertiary aquifer wells immediately below the Blue Bluff marl and the two observation wells in the Cretaceous aquifer was also maintained.

Water-table aquifer wells were measured on a weekly interval for a minimum period of 6-months. With each water-level measurement, depth to the base of each well was also measured to determine if silting occurred.

A review of water-level and precipitation data was made after 6 months of monitoring to establish a correlation (amount and lag-time) of water table response to precipitation. The review established a correlation and indicated that frequency of measurements could be reduced to once a month. Measurements on a monthly basis continued to establish seasonable correlations with precipitation.

The six piezometers open to the Blue Bluff marl were also monitored weekly. These piezometers were measured the same day each week as the wells in the water table aquifer. The data from these piezometers was reviewed after 6 months to determine the degree of hydrostatic pore pressure fluctuations in the marl. Once equilibrium was accomplished, and degree of fluctuation was determined, monitoring frequency was reduced.

The wells in both confined aquifers (Tertiary and Cretaceous) were monitored on a monthly basis for a period of 6 months. The measurements were made concurrently with measurements in the water table aquifer. After the 6-month review of the data, it was determined that quarterly measurements could be made.

In December 1988, the well monitoring program was modified. Quarterly measurements of the four water table wells within the area of backfill around the power block (LT1B, LT7A, LT-12, LT-13) are to be taken. The balance of wells and piezometers are to be measured semiannually.

The frequency of monitoring of the observation wells was evaluated in 1991. The evaluation concluded that the water table aquifer water levels consistently follow the same trends and fluctuations; therefore, the number of wells being read could be reduced. The evaluation also concluded that the Blue Marl readings can be represented by one cluster of piezometers.

In 1993, the well monitoring program was modified to reduce the number of wells being read quarterly and semiannually. The well monitoring program was modified in 1995 to only read levels in the surface water table wells. The current well program is shown on drawing AX6DD335 and in table 2.4.12-9. A summary of the observation well data is in tables 2.4.12-7A through 2.4.12-7C.

2.4.12.2.3.2 Tertiary Aquifer. Water levels measured in observation wells open to the Tertiary aquifer confined beneath the marl indicate the direction of ground water movement is toward the Savannah River in the vicinity of the site. Drawings AX6DD327 and AX6DD328 show the contours of the piezometric surface for October 1971 and for December 1984. A comparison of the two sets of contours indicates very little difference. These data demonstrate the marked gradient toward the river. Selected hydrographs of Tertiary aquifer wells are on drawing AX6DD336.

2.4.12.2.3.3 Water Table Aquifer. As previously noted, the site is on an interfluvial ridge. Ground water present in the materials overlying the marl is under water table conditions and isolated hydraulically from other aquifers by the marl. Replenishment is by infiltration of precipitation, and after precolating to the water table, ground water moves laterally to the bordering interceptor streams. Hydrographs of water-table aquifer observation wells are on drawing AX6DD337.

Contours of the water table for November 1971 and for December 1984 are shown on drawings AX6DD329 and AX6DD330. Contours for the 1971 data are based on measurements of water levels in observation wells and springs and seepage areas on the interceptor streams. The water table is, in general, a subdued reflection of the ground surface, and movement is from the central portions of the interfluve toward the bordering interceptor streams.

Construction dewatering at the site was completed in March 1983. Water levels and the flow pattern of the water table aquifer have returned to a preconstruction pattern. No permanent dewatering facilities have been provided nor are any necessary at the plant site.

2.4.12.2.4 Hydrogeologic Properties of Subsurface Materials

The hydrogeologic properties of the materials beneath the site were determined by extensive subsurface exploration at and near the site by in situ tests conducted in the field, and supplemented by laboratory tests of numerous samples collected throughout the drilling programs.

The hydraulic conductivity (permeability) of the subsurface materials was measured in the field by pumping tests, constant-head inflow tests (including open standpipe and permeameter tests), variable-head inflow tests, and slug tests.

2.4.12.2.4.1 Cretaceous and Tertiary Aquifers. As stated in paragraph 2.4.12.1.2.2, the Cretaceous and Tertiary aquifers are believed to be in hydraulic connection at the site. The hydrologeologic properties of the combined Cretaceous/Tertiary aquifer were determined at the plant site by pumping tests on test well TW-1 during early site investigations and by pumping tests on makeup wells MU-1 and MU-2 during plant construction. A brief description of the makeup well pumping test program is given in the following paragraphs. (A detailed description of the testing program for TW-1 was included in the Preliminary Safety Analysis Report). The transmissivities and storage coefficients for the wells are included in table 2.4.12-8.

The pumping test for MU-1 began on August 21, 1977, and concluded 72 h later. Recovery level readings began immediately following pump shutdown and continued for 24 h. The pump intake was placed at approximately 232 ft below ground level at approximately el -35 ft mean sea level (msl). Depth to water in the well before pump startup was 27.7 ft (from top of casing). The step-discharge test is summarized below:

Well Discharge (gal/min)	Step Duration (min)	Total Drawdown (ft)	Specific Capacity (gal/min/ft)
1150	720	32.7	35.2
2232	720	72.3	30.0
3334	2880	123.9	26.9

The transmissivity (T) of the aquifer was determined from the measurements of drawdown taken during the initial step-discharge test and from the measurements of recovery following the test.

The drawdown data were analyzed using the Jacob method (modified Theis nonequillibrium equation), and the recovery data were analyzed by the Theis recovery formula. The analyses show that the transmissivity is in the range of 110,400 to 116,600 gal/d/ft.

The pumping test for MU-2 began on December 15, 1977, and concluded 72 h later. Recovery level readings began immediately following pump shutdown and continued for 24 h. The pump intake was placed at 231 ft below top of 16-in diameter casing at approximate el -16 ft msl. Depth to water in the well before pump startup was 42.1 ft (from top of casing). The step discharge test is summarized below:

Well Discharge (gal/min)	Step Duration (min)	Total Drawdown (ft)	Specific Capacity (gal/min/ft)
1200	720	22.0	54.5
2175	720	47.5	45.8
3316	2880	81.3	40.8

The transmissivity of the aquifer was determined from the measurements of drawdown taken during the initial step- discharge test and from the measurements of recovery following the test. The drawdown data were analyzed using the Jacob method (modified Theis nonequilibrium equation), and the recovery data were analyzed by the Theis recovery formula. The analyses show that the transmissivity is in the range of 128,700 to 130,900 gal/d/ft.

Table 2.4.12-8 summarizes aquifer characteristics of the Cretaceous aquifer determined with test well TW-1 and with the makeup water wells. The moderately wide range of transmissivities and storage coefficients shown on the table suggests that the aquifer is not uniform in character and that permeability varies from place to place. No particular significance is attached to this condition because (1) the range of differences is not especially large and (2) the lowest of the values (110,400 gal/d/ft) is still indicative of a highly productive aquifer. It is noteworthy that the 158,000-gal/d/ft value, determined from a distance-drawdown analysis and considered more indicative of the average, falls very close to the median value between the highest and lowest transmissivities obtained. This implies that the value of 150,000 gal/d/ft is a realistic and conservative value to be used in evaluating the capability of the aquifer in this area to yield water to wells. The values of storage coefficient determined from the pumping tests indicate the aquifer is effectively confined.

2.4.12.2.4.2 Blue Bluff Marl. The Blue Bluff marl is approximately 70 ft thick. It extends over an area well beyond the limits of the plant site and the interfluvial ridge on which

the plant site is located. The comprehensive exploration and testing that has been conducted demonstrates that the marl is an extensive and persistent unit. In particular, the marl's integrity as a barrier to ground-water movement has been demonstrated by (1) field permeability testing, (2) visual inspecton of cored samples, the marl surface exposed during site excavation, and marl outcrops along the Savannah River, and (3) comparison of water levels in observation wells open to the water table aquifer with those observed in wells open to the confined aquifer immediately below the marl.

The continuity of this nearly impermeable material (i.e., the lack of voids, open joints or fractures) has also been demonstrated. Since 1971, there have been over 10,000 ft of marl penetrated at VEGP by drilling, coring, Standard Penetration Testing, and undisturbed sampling. When coring, the most revealing evidence for the occurrence of voids or permeable fractures is a loss of all or part of the drilling fluid and/or a sudden or rapid advance of the core barrel. At no time throughout this extensive testing was there any unaccountable fluid loss or abnormal tool advance in the marl. None of the borings encountered significantly fractured zones, nor was there evidence of leaching (removal of calcareous material by solution activity) of the marl.

Visual inspections and detailed logging of the many extracted samples of marl have likewise produced no indications of voids or extensive fracture zones. Over 1000 ft of the marl penetrated in drill holes have been either cored or sampled, and have been closely inspected and described. Very few joints or fractures were observed and those identified were consistently found to be tight, and without void space. More than 940,000 ft^2 of marl beneath the plant site was exposed during the excavation for the foundation and was directly examined and carefully logged. The results are discussed in detail in subsection 2.5.1.2.2.2.1.1. Additionally, marl outcroups along the Savannah River in the vicinity of VEGP have also been examined and mapped. These extensive and detailed mapping investigations of the marl formation at VEGP have found no evidence of voids, solution cavities, or systematic or extensive fractures in the marl.

The large and consistent hydraulic head differential between the water table aquifer above the marl and the confined aquifers immediately below the marl confirms that the marl is a barrier to ground water movement. The hydraulic head (energy potential) of ground water in an aquifer is commonly exprssed as ft (elevation) above sea level, and is determined from measuring the elevation of water in an observation well. In the vicinity of the plant, the hydraulic head in the water table aquifer is 45 to 55 ft greater than the hydraulic head in the aquifer immediately below

the marl. To bring about such a marked difference in hydraulic head, the barrier must be extensive and without significant through-going openings (such as fractures or solution cavities).

This difference in hydraulic head can be seen by comparing the ground water (equipotential) contours shown on drawings AX6DD328 and AX6DD330. The contours are based on water levels measured in observation wells in December 1984. Similar conditions were observed prior to plant construction, as indicated by the contours of water levels measured in wells in October and November 1971 and shown on drawings AX6DD327 and AX6DD329.

A nest of observation wells constructed at the site of exploratory hole 42 provided a measure of this hydraulic head differential between the overlying water table aquifer and the confined aquifer sands beneath the marl. The observation wells were constructed in 1971 and included two, 42B, and 42C, open to the marl itself, one, 42A, open to the confined aquifer and one, 42D, open to the water table aquifer. At these wells, the marl is 65 ft thick. The wells were monitored for 4 years until construction of the plant required their closure, at which time they were sealed. Hydrographs of the measured levels are shown on drawing AX6DD408.

A general relationship between the water levels (head) of the observation wells and the zone each well monitors can be seen on drawing AX6DD408. That is, the differences in water levels (head) between the observation wells is generally proportionate to the thickness of marl between zones monitored by the wells. The zones monitored by each observation well are illustrated on drawing AX6DD408. For example, the difference in water levels of the two wells open to the two aquifers (42D and 42A) is about 55 ft, (the head in the water table aquifer is higher) and the thickness of marl between them is 65 ft. In comparison, well 42B is open to an interval of the marl that is near the bottom of the marl. The water levels measured in well 42B are from 15 to 20 ft different (higher) than those measured in well 42A, which is open to the underlying confined aquifer, and the thickness of marl between them is about 10 ft. Water levels measured in well 42C follows this general relationship. It is open to an interval of the marl that is within 3 ft of the top of the marl. The water levels measured in 42C are from 50 to 52 ft higher than those measured in 42A, and the thickness of marl between them is about 60 ft.

Two clusters of piezometers (A&B) were installed in the marl in June and July 1985. The clusters are located at opposite corners of the power block, as shown on drawings AX6DD333, AX6DD334, and AX6DD335. The piezometers provide a direct measurement of the hydraulic head over the full thickness of the marl. The differences in hydraulic head between the piezometers within a

cluster show a progressive decline in head with depth as was observed in the 42 series (see drawing AX4DD408).

In situ permeability tests were performed in the marl during early site investigations, river facilities investigations, and during recent (1985) installation of observation wells. Results of the tests are summarized on table 2.4.12-10. Tests were conducted in 95 intervals at different depths in 28 exploratory holes. In 90 percent of the intervals tested, no measurable water inflow occurred. In only three holes was any measurable water inflow confirmed; in two of these the inflow occurred in near surface, weathered marl. (Water inflow measured in three other holes was due to leakage around the packers.)

Laboratory permeability tests were conducted on 10 samples of the core collected from the marl observation wells. The range of laboratory permeability measurements is from 5.0×10^{3} ft/yr to 8.5 ft/yr. The results of the laboratory tests are summarized on table 2.4.12-10. The permeability tests indicate that the marl is nearly impermeable.

Porosity of the Blue Bluff marl was calculated from laboratory analyses of undisturbed samples taken in exploratory holes during the initial site studies. The porosities range from 24 percent to 62 percent, with a mean value of 47.5 percent. The calculated porosities are listed on table 2.4.12-11.

2.4.12.2.4.3 Water Table Aquifer. The permeability of the water table aquifer was measured by field-test methods and laboratory testing. Measurements were made of Barnwell sands and clayey sands, Utley limestone, and of backfill material. Preliminary estimates were made of the Barnwell sands and clay by correlation to grain-size analyses. Porosities of undisturbed samples of Barnwell sands, silty sands, and clay, as well as of samples of backfill material, were measured in the laboratory.

In-situ permeability of Barnwell sands and clayey sands was measured at two exploratory holes (183 and 184) at the plant site, and in the laboratory on four samples taken from hole 107A. Three of those samples were undisturbed; the fourth was a disturbed sample for which permeability was measured at three densities. Similarly, permeabilities were measured in the laboratory at four densities of two "grab" samples of backfill material. The backfill samples were selected for different amounts of material finer than the No. 200 sieve: one sample with 5.9 percent and one with 11 percent. Variation of permeability with density was determined by measuring each sample at four different densities. The testing procedure followed was to saturate the samples by the back-pressure technique, confine them at the effective overburden pressure, and then maintain a constant hydraulic gradient across the sample.

Preliminary estimates of permeability of the Barnwell sands as backfill material were made by the approximate relationship to grain size found by A. Hazen for filter sands [11]. These estimates are reported in reference 10.

The permeability of the backfill material was measured in situ by slug tests performed in four observation wells in the power block area [13].

The transmissivity values determined from the results of the insertion and extraction cycles of each test were averaged to obtain the transmissivity in the vicinity of each well. The average permeability of the backfill at each test site was then determined. The results are summarized on table 2.4.12-15.

Two test wells, each with an array of four observation wells, were constructed in the vicinity of the power block excavation to conduct aquifer pumping tests to measure the permeability of the Utley limestone. Beneath the site, the Utley limestone is composed predominantly of shells in a matrix of silt and clay, but includes thin and discontinuous beds of limestone, sand, and coquina. It was thought in the initial plans for dewatering that the limestone, which is at the base of the water table aquifer, might be very permeable and could act as a drain for dewatering.

The first well, W-1, was pumped at a rate of 36 gal/min for 97 h, and response was sufficient in all four observation wells for analysis. The second well, W-2, was in a much less permeable zone of the limestone than the first well, and response in the observation wells was negligible to small, precluding effective analysis. The average yield of W-2 was 12 gal/min, but it fluctuated considerably and the test was terminated after 27 h. The two tests indicated that transmissivity of the Utley limestone is relatively low and varies considerably from place to place. It was concluded it would not be an effective drain for dewatering.

In addition to the pumping tests described above, both falling-head and constant-head tests were conducted in some of the observation wells. During two of these tests, the water-level rise in an adjacent observation well was measured. Only the response of observation well 2A to the constant inflow of 74 gal/min at well 2B was adequate for analysis. The results of the tests of the Utley limestone are summarized in table 2.4.12-13.

TABLE 2.4.12-7B (SHEET 2 OF 2)

Observation Wells In Confined Aquifers

Well No.	History: Installed (YR)	History: Current Status	Coordinates N	Coordinates E	Ground Surface El[a] (ft)	Top of PVC El[b] (ft)	Depth Bottom of Marl (ft)	Screen Interval (ft)
101A	1971	Grouted, 1974	7950	9515	210.6	211.7	138	190 - 200
121	1971	Grouted, 1985	10467	12195	88.8	--	(3)	78 - 88
135	1971	Grouted	8992	8742	200.5	201.3	124.8	160 - 170
144	1971	Grouted	10403	12124	103.2	103.2	38	38.5- 48.5
147	1971	Grouted, 1978	7965	8471	226.2	227.4	152	280 - 300
181	1971	Grouted, 1985	8744	6833	258.3	--	194.5	190 - 200
246	1972	Grouted, 1984	10532	6553	210.4	213.5	179.7	220 - 230
Tuscaloosa Formation (Cretaceous)								
TW-1	1972	Inactive 1995-1998	7738	9984	218.5	928	140	506 - 850
MU-2	1977	Inactive 1995	9500	9135	214.5	850	150	450 - 820

a. Elevations determined at time of drilling.

b. Elevations are current (Nov 1985) or latest prior to well abandonment.

c. Marl not present.

TABLE 2.4.12-7D

Water Supply Wells

Well No.	Installed (YR)	Current Status	Coordinates N	Coordinates E	Ground Surface El[a] (ft)	Drilled Depth (ft)	Aquifer	Remarks
MU-1	1977	Active	9425	10531	196.9	851	Cretaceous	Cooling water makeup
MU-2A	1983	Active	8820	8400	225	884	Cretaceous	Cooling water makeup
TW-1	1972	Active	7738	9984	218.5	860	Cretaceous	Alternate cooling water makeup
CW-1	1976	Abandoned	6913	8919	255[b]	251	Tertiary	Construction supply
CW-2	1980	Abandoned	7452	6525	221	378	Tertiary	Construction supply
CW-3	1974	Active	3079	6645	210	220	Tertiary	Nuclear operations garage
SB	1981	Active	1666	15562	115[b]	340	Tertiary	Simulator building supply
PW	1973	Active	6880	14159	210[b]	100	Water table	Plant Wilson supply
IW-4	1989	Active	2979	6645	215[b]	370	Tertiary	Irrigation supply
SW-5	1990	Active	10704	8120	232[b]	200	Tertiary	Security training supply

a. Unless otherwise indicated, elevations shown are determined at time of drilling.

b. Estimated from topography, drawing AX6DD343.

The results of the testing program are discussed in paragraph 2.5.4.2.2.

2.5.4.5.2 Backfill

Compacted backfill is placed in the power block area from the top of the marl stratum at approximately el 130 ft to the design elevation for each structure. The plant grade elevation is at 219 ft 6 in. or below. The auxiliary building and nuclear service cooling water towers, containment instrumentation cavity, and radwaste solidification building are supported directly on the marl stratum. The other safety-related power block structures are supported on compacted backfill. The foundation elevations of these structures are given in table 3.7.B.1-2. The radwaste solidification building foundation consists of large diameter drilled caissons extending into the marl stratum.

With the exception of an area north of the turbine building, an area over the in-situ slopes forming the west side of the power block excavation, and localized areas around nonsafety-related buried piping above the water table, all backfill in the power block area is compacted to an average of 97 percent of the maximum density determined by American Society of Testing Materials (ASTM) D 1557, with no tests below 93 percent and not more than 10 percent of the tests between 95 and 93 percent. A procedure to achieve the required degree of compaction was developed in a test fill program. The results of the test fill program are discussed in paragraph 2.5.4.5.2.7 and presented in detail in reference 7.

The area north of the turbine building was compacted to an average of 95 percent of the maximum density determined by ASTM D 1557 with not more than 10 percent of tests between 93 and 95 percent and no test below 93 percent. The static stability and liquefaction analyses (paragraphs 2.5.4.8 and 2.5.4.10) were performed for the case where the power block backfill was assumed compacted to 97-percent relative compaction. A 95-percent relative compaction for the area north of the turbine building between el 185.5 to 219.5 ft has no effect on safety-related structures, since no Category 1 structures rely on this material for a load bearing foundation. The integrity of the turbine building design is not affected because the area does not project below the bottom of the building and does not provide foundation support for the turbine building. Since the area north of the turbine building is away from Category 1 structures and represents less than 10 percent of the total power block backfill, the factor of safety against liquefaction is not affected.

The area over the in-situ slopes forming the west side of the power block excavation was compacted with Category 2 material to an average of 95 percent of the maximum density determined by ASTM D 1557 with not more than 10 percent of tests between 93 and 95 percent and no test below 93 percent. The area is above elevation 206 and bounded by the coordinates N73+49, to N86+20 and E89+79 to E91+38. The use of Category 2 material compacted to 95 percent in this area has no effect on safety-related structures, since neither Category 1 structures nor the turbine building rely on this material for a load bearing foundation. The material is directly above the in-situ soils which are themselves not used to support Category 1 structures. Because the material is also over 40 ft above the water table and away from Category 1 structures the factor of safety against liquefaction is not affected.

Approximately 2.5 ft of undocumented fill was placed beneath a nonsafety-related concrete slab located above the in-situ excavation slopes on the south side of the power block. The slab is bounded by the coordinates N73+55 to N74+40 and E93+98 to E95+28, and is located at grade. The undocumented soils do not support, nor are they adjacent to, safety-related structures or equipment. They are located directly above in-situ soils which are themselves not used to support safety-related structures or equipment. Because the material is over 45 ft above the water table and located away from Category 1 structures, the factor of safety against liquefaction is not affected.

An approximate 6 inch lift of undocumented backfill was placed at grade level in a trench used for routing two separate 4-inch diameter PVC drain lines in the low voltage switchyard area. These additional pipe drains were installed to remove rainfall runoff that was accumulating in the bottom of the station service trenches and in two pull boxes. The undocumented soils do not support, nor are they adjacent to, safety-related structures or equipment. Because this material is at least 45 feet above the water table and located away from Category 1 structures, the safety factor against liquifaction was not affected.

Up to 24 in. of graded aggregate material was substituted for sand and silty sand backfill as the power block fill was brought to finished grade. This material was compacted to 97 percent of the maximum density determined in accordance with ASTM D 1557 and served to protect the sand and silty sand Category 1 backfill from erosion and vehicular traffic.

The localized area around nonsafety-related buried piping and similar conduits is compacted with concrete sand or other sands with similar properties to an average of 95 percent of maximum

density determined by ASTM D 1557, with no tests below 93 percent and not more than 10 percent of the tests between 93 and 95 percent, unless compacted to an average of 97 percent using Category 1 backfill as defined below for safety-related piping. Typically, this localized area consists of backfill 3 ft above, 1 ft below, and a maximum of 5 ft on either side of nonsafety-related buried piping or similar conduits. Only a few percent of the total power block backfill utilizes this compaction criteria. All such areas are located above the water table so that the factor of safety against liquefaction is not affected. Sand compacted to an average of 95 percent in the limited areas around piping and similar conduits will not affect the structural integrity of any Category 1 structures. Sand compacted to an average of 95 percent will have static and dynamic properties consistent with those properties assumed for design of power block structures and piping. A static cone penetrometer reading of 200 is used to decide on the adequacy of concrete sand or other sands with similar properties between and below nonsafety-related piping in areas where constrained access prevents the use of the sand cone test.

Trenches containing safety-related piping or similar conduits are backfilled by placing lean concrete to the bottom of the pipe to provide continuous support and backfilling with Category 1 backfill, using wooden tampers, hand-held power tampers, or hand-held vibratory compactors as required. Use of these methods produces an average compaction of at least 97 percent of the maximum dry density determined in accordance with ASTM D 1557, with no tests below 93 percent and not more than 10 percent of the tests between 93 and 95 percent. Category 1 backfill material compacted between and immediately around pipes has a fines content below 10 percent. Static cone penetrometer readings developed from correlation with sand cone tests are used to decide on the adequacy of the compaction in areas where constrained access prevents the use of the sand cone test.

Post construction (after 1989) compaction may also be measured by a nuclear density test which has been correlated and calibrated with sand cone test per ASTM D2922-81 and FSAR paragraph 2.5.4.5.2.7.1D.

Lean concrete is used to backfill localized areas where placement of backfill material is impractical.

Undocumented backfill may be installed in areas designated for Category 1, Noncategory 1, and Category 2 backfill, on a case by case basis, and approved only when it is confirmed that there will be no effects on soil liquefaction, settlement, and load

carrying capacities. The locations of the installment of undocumented backfill in a Category 1 area will be recorded on engineering drawings AX2D46T025 or AX2D46T001 to provide for proper consideration in regard to future installation or construction of structures, railroads, pipelines, utilities, etc.

2.5.4.5.2.1 Sources and Quantities of Backfill Material. An estimate of the total quantity of Category 1 backfill required in the power block was made by first determining the volume of the excavated area. The quantity obtained was increased by 10 percent to allow for compaction. The volume of all the structures below the grade level was then deducted from the total volume to obtain quantity of Category 1 backfill required. The quantity of Category 1 backfill required beneath and around the power block structures was estimated to be about 4.2 million yd^3.

Seven borrow sources within the plant site were investigated. These sources were designated as borrow areas 1, 2, 3, 4, 5, 1-A, and 1-B. In addition, two stockpiles, namely stockpiles A and B, were also investigated. These stockpiles contained material that had been obtained from excavations in the power block area. The approximate limits of all borrow areas and stockpiles are shown on drawing AX6DD394.

Detailed field exploration and laboratory testing programs were performed to identify suitable material in the borrow areas and stockpiles. The results of these investigations are presented in references 2, 3, and 4. Based on an evaluation of the field and laboratory data, it was determined that materials selected for Category 1 backfill should be sand and silty sand with not more than 25 weight percent passing the U.S. No. 200 sieve size. This criterion was used to judge the suitability of materials for backfill. It was concluded that borrow areas 1, 2, 3, 4, 5, 1-A, 1-B, and stockpile A were good sources of Category 1 backfill and that substantial quantities of sand and silty sand could be obtained by selective excavation. It was also concluded that stockpile B consisted of mainly clayey soils. From considerations of anticipated excessive structure settlement associated with clayey backfill and the difficulty of selective excavation to remove clayey soils, it was decided to exclude stockpile B as a suitable source for Category 1 backfill.

Estimated quantities of material suitable for Category 1 backfill were as follows:

Borrow Area	Estimated Quantity (yd^3)
1	1,503,000
2	251,000
3	1,007,000
4	1,197,000
5	190,000
1-A	1,700,000
1-B	1,700,000

In addition, the total quantity of material available in stockpile A was estimated to be approximately 600,000 yd^3. Thus, a total quantity of 8,148,000 yd^3 of Category 1 backfill was identified from the aforementioned sources, which was considered more than sufficient for backfill requirements in the power block.

An additional borrow area (3-A) was investigated through field exploration and laboratory testing during October and November 1992 to identify Category 1 backfill for future general use around the plant site. It was concluded that borrow area 3-A is a good source of Category 1 backfill, consisting of sand and silty sand meeting the above stated criteria, with the use of selective excavation.

The estimated quantity of Category 1 backfill, resulting from the 1992 investigation, which may be used for future plant requirements is as follows:

Borrow Area	Estimated Quantity (yd^3)
3-A	1,456,000

A portion of borrow area 3-A is a subset of old borrow area 3. This portion of borrow area 3 was never excavated. Future landfill trenches are planned due west of the existing landfill trench as shown on drawing AX6DD394. Therefore, it is likely that soil from borrow area 3-A will be excavated. Soil from borrow area 3-A which meets the criteria for Category 1 backfill (reference 28) may be stockpiled at the time of landfill excavation.

2.5.4.5.2.2 Exploration. Field exploration for borrow areas 1, 2, 3, 4, and 5 and stockpiles A and B was accomplished in early 1977. Subsurface exploration involved test pits excavated to a maximum depth of 25 ft by means of a backhoe. A total of 26, 8, 40, 12, and 3 test pits was excavated and logged in

borrow areas 1, 2, 3, 4, and 5, respectively. Thirty-four test pits were excavated and logged in the two stockpiles. An appropriate number of jar and bulk samples were taken for laboratory testing.

Borrow area 1-A was investigated in the summer of 1978. Eighteen borings evenly spaced in a grid pattern covering the area were drilled and logged using a hollow stem auger. The borings extended to depths ranging from 13.5 to 66 ft below the existing grade and were terminated at depths below the water table ranging from 0 to 14 ft. Representative soil samples were obtained at 5-ft intervals and whenever a change in soil type occurred.

Investigations in borrow area 1-B were performed in June and July 1979. Sixty borings were drilled and logged during this investigation. Holes were advanced using both rotary drilling and auger drilling techniques. The depth of borings ranged from 40.5 to 81.5 ft below existing grade and were terminated upon reaching the water table. In most of the borings representative split-spoon soil samples were obtained at 5-ft intervals. In some borings sampling was done at 2 1/2-ft intervals. In addition, bulk samples were obtained.

A field exploration of borrow area 3-A was conducted during October 1992. Fourteen soil borings were drilled using a 4-1/4 inch hollow stem auger and continuously sampled with a 3-1/2 inch I.D., 5-foot long continuous sampler. Samples were logged during the drilling operations. Three bulk samples were also obtained. The boring depths ranged from 23.8 feet to a maximum depth of 45 feet. Most of the borings were terminated upon encountering clay deposits. No borings were drilled beyond a depth of 45 feet due to the impracticality of excavating backfill to greater depths.

Logs of all test pits and borings drilled in the borrow areas and stockpiles are contained in references 2, 3, 4, and 28. Locations of all test pits and borings are shown on drawing AX6DD394.

2.5.4.5.2.3 Laboratory Testing. In order to classify the soils in borrow areas 1, 2, 3, 4, 5, 1-A, and 1-B; and stockpiles A and B and obtain the static and dynamic engineering properties of compacted backfill, many laboratory tests were performed on samples obtained from the field explorations.

These tests are listed below:

- Laboratory classification of soils.
- Grain size distribution.
- Atterberg limits.
- Moisture content of soil.
- Specific gravity.
- Moisture-density relation.
- Relative density.
- Static consolidated drained triaxial compression.
- Static consolidated undrained triaxial compression.
- Consolidation.
- Stress-controlled consolidated undrained cyclic triaxial.
- Strain-controlled consolidated undrained cyclic triaxial compression.
- Resonant column.
- Triaxial tests to determine volume changes due to cyclic loading.
  - Cyclically loaded without permitting drainage.
  - Cyclically loaded while permitting drainage.

In order to determine the suitability of soils in borrow area 3-A for use as Category 1 backfill, the following laboratory tests were performed:

- Grain size analysis, including hydrometer analysis on selected samples.
- Atterberg limits.
- Moisture content.
- Moisture-density relation.

All tests were performed in accordance with applicable ASTM test methods or recognized procedures where no ASTM was available.

Details of the test results and test procedures are included in references 2, 3, 4, 5, and 28.

2.5.4.5.2.4 Criteria for Category 1 Backfill Suitability. Soil classification test data obtained in accordance with ASTM D 2487, D 2488, D 1140, D 422, D 423, and D 424 were used to identify materials suitable for use as Category 1 backfill in the borrow areas and stockpiles. Cross-sections were developed based on the classification test data to facilitate selective excavation of acceptable material in the borrow sources. Summaries of classification test data and cross-sections for each borrow source are contained in references 2, 3, 4, and 28.

Select sand and silty sand materials are used for Category 1 backfill. In selecting soils for use as Category 1 backfill, only those soils with 25 weight percent or less passing the U.S. No. 200 sieve size were considered suitable. Periodic tests in accordance with ASTM D 422 and D 1140 were used to ensure that the above criterion was being satisfied during backfilling operations.

2.5.4.5.2.5 Design Static Properties. For sand and silty sand backfill compacted to an average of 97 percent of the maximum dry density determined by ASTM D 1557, the static properties shown in table 2.5.4-8 were used for design. These properties were based on data obtained from the tests referred to in paragraph 2.5.4.5.2.3.

2.5.4.5.2.6 Design Dynamic Properties. For compacted sand and silty sand, the dynamic properties shown in table 2.5.4-9 are used for design.

For computing the dynamic shear modulus at higher strain levels, the attenuation factors shown in figure 3.7.B.2-5 were used for design.

The variation of damping ratio with shear strain (figure 3.7.B.1-8) was also used for design.

2.5.4.5.2.7 Test Fill Studies.

2.5.4.5.2.7.1 Test Fill for Heavy Equipment Compaction. A test fill program was performed to evaluate the performance of three different pieces of compactors: Ingersoll-Rand SPF 60,

Ingersoll-Rand SP 60, and Raygo 600A. The purpose of the program was to determine the appropriate lift thickness and number of passes required to achieve an average of 97 percent of the maximum density according to ASTM D 1557, with no tests below 93 percent and not more than 10 percent of tests between 95 and 93 percent. The material used for the test fill program consisted of sand and silty sand. Seven test fills were constructed.

The results of the test fill program are discussed in detail in reference 7.

A brief summary of the conclusions of the test fill program is given below:

A. The moisture content of the sand and silty sand material should be within ±2 percent of the optimum moisture content determined by ASTM D 1557. Upon initiation of the backfill program, the moisture content range was ±2 percent. This was later modified by program specifications to -3 percent to +2 percent. This modification was based on a review of the original test fill data and additional field tests performed during the backfill operation. Material too wet or too dry should not be compacted until brought within the required limits.

B. The Raygo 600A roller travelling at 1.5 mph can compact a 6-in. uncompacted lift, moisture conditioned within the range specified above, in four passes. Also, a combination of the Raygo 600A and Ingersoll-Rand SPF 60 rollers travelling at 1.5 mph can compact a 6-in. uncompacted lift with a total of four passes (two each). No test fills were made with the Ingersoll-Rand SPF 60 and SP 60 compactors for a 6-in. uncompacted lift thickness. These two rollers are capable of delivering a compaction effort comparable to or greater than the Raygo 600A compactor. Therefore the Ingersoll-Rand SPF 60 and SP 60 can be used for compacting a 6-in. uncompacted lift with four passes each separately.

C. The roller speed must be maintained at 1.5 mph.

D. The sand cone method (ASTM D 1556), modified to increase the minimum hole volume to 0.2 ft^3, provided consistent test results as compared to other test procedures. Therefore, it was used for all quality control testing during construction.

However, the nuclear density testing device may be used post construction (after 1989) in lieu of the sand cone method provided: 1) an acceptable laboratory calibration and field (soil specific) correlation between sand cone and nuclear test results can be achieved per the provisions of ASTM D2922-81, Calibration; 2) at least 10 test comparisons are made and the correlation is checked in an ongoing manner for every subsequent 10 nuclear density determinations; 3) the minimum 0.2 ft^3 sand cone test volume is employed; and 4) the correlation is established as per paragraphs 4.2.1, 4.2.2, and 4.2.3 of ASTM D2922-81 in order that minimal deviation is obtained.

Table 2.5.4-10 summarizes the results of the heavy equipment test fill program.

2.5.4.5.2.7.2 Test Fill for Hand Compaction Equipment. A test fill program was also performed to determine satisfactory compaction procedures involving three different types of hand compaction equipment. The test fill program was performed using the Wacker WS-74 Dual Drum, Wacker 100 (Jumping Jack), and Ingersoll-Rand SP 24 vibratory hand compactors. Based on the data obtained during the test fill operation, it was determined that the procedures outlined below will meet the Compaction requirements specified in paragraph 2.5.4.5.2.

Type of Equipment	Thickness of Lift (in.)	No. of Passes	Speed (ft/min)	Vibrations (per min)
Wacker WS-74 Dual Drum	6	4	60	3000
Wacker 100	6	2	20	630
Ingersoll-Rand SP 24	6	4	60	4000

Table 2.5.4-11 summarizes the results of the hand compaction equipment test fill program.

2.5.4.5.2.8 Nonsafety-Related Pipe Trench Backfill in Power Block Area. Trench backfill for nonsafety-related piping in Category 1 fill areas is compacted to an average of 95 percent relative compaction as defined in paragraph 2.5.4.5.2. The backfill material used is concrete sand with 2 percent or less fines. The sand is saturated and compacted by internal vibration using concrete vibrators.

A test fill program was implemented to determine whether the required degree of compaction could be achieved by the vibrated sand method. The resulting data demonstrate that the compaction above, between, and below the pipes meets the required compaction criteria. Results of the test fill program are summarized in reference 17.

2.5.4.5.2.9 Soil-Cement-Flyash Backfill. Plastic backfill consisting of cement, flyash, sand, and water is used as bedding material for Category 2 circulating water lines located in the Category 1 backfill zone north of the turbine building. Plastic backfill is being used in lieu of compacted sand and silty sand backfill because of the difficulty in obtaining the required compaction around the pipes.

Static and dynamic tests were performed on specimens consisting of different proportions of cement, flyash, sand, and water. The tests demonstrated that specimens of plastic backfill tested possess static and dynamic properties comparable to Category 1 backfill. The properties summarized below are of the plastic backfill that is used. The properties correspond to a plastic backfill mix of 65 lb of cement, 385 lb of flyash, 2586 lb of sand, and 469 lb of water per cubic yard of backfill.

Plastic unit weight	129.2 lb/ft^3
Slump	5 in.
Air content	3.5 percent
Unconfined compressive strength	
Average at 7 days	20.7 psi
Average at 28 days	30.5 psi
Average at 91 days	61.4 psi
Dry unit weight	
Average at 7 days	114.4 lb/ft^3
Average at 28 days	114.5 lb/ft^3
Average at 91 days	114.5 lb/ft^3
Moisture content	
Average at 7 days	14.0 percent
Average at 28 days	14.2 percent
Average at 91 days	14.6 percent
Cohesion	
Range at approximately 100 days	2100-5000 lb/ft^2

Angle of friction Range at approximately 100 days	36-48.5°
Range of shear modulus at approximately 100 days, under a confining pressure of 2 ksf for strain level of 10^{-4} percent	4200-4400 lb/ft^2
Range of damping at approximately 100 days for strain level of 10^{-4} percent	2.4-2.6 percent

2.5.4.6 Site Ground Water Conditions

The occurrence and movement of ground water beneath the site are described in detail in section 2.4.12. The first ground water body encountered beneath the VEGP site is a water table (unconfined) aquifer in the Barnwell sands and Utley limestone. It overlies the Blue Bluff marl. The site is on an interfluvial ridge that is nearly surrounded by streams that have cut down through the Barnwell sands and Utley limestone to the marl. This has isolated the water table aquifer beneath the site from adjacent areas. Ground water discharges from the water table aquifer to the surrounding streams. The streams discharge to the Savannah River.

Underlying the water table aquifer is the Blue Bluff marl, the upper member of the Lisbon Formation. The marl layer, approximately 70 ft thick, is a near-impermeable layer that effectively confines the underlying Tertiary and Cretaceous aquifers.

The Tertiary aquifer is represented beneath the site by the "unnamed sands" member of the Lisbon Formation. These sands are the local, minor equivalent of the regional Tertiary aquifer that is referred to as the principal artesian aquifer. The Cretaceous aquifer, the lowermost confined aquifer consists primarily of the sands and gravels of the Tuscaloosa Formation. It is often referred to as the Tuscaloosa aquifer. The Cretaceous aquifer and the lesser Tertiary aquifer are believed to be hydraulically connected beneath the plant site. Excavations for structures at the site do not extend through the marl; the marl remains as a hydrologic barrier beneath the site. Therefore, the confined aquifers will have no direct effect on structures.

Replenishment of the water table aquifer is by infiltration of precipitation, and after percolation to the water table, it moves laterally to the bordering interceptor streams. Contours of the water table for November 1971, and December 1984 are shown on drawings AX6DD329 and AX6DD330. The water table is, in general, subdued reflection of the ground surface, and movement is from the central portions of the interfluve toward the bordering interceptor streams.

Foundation design for the power-block facilities required excavation of the materials comprising the water table aquifer overlying the Blue Bluff marl. To construct and maintain the excavation the materials were dewatered by a series of ditches oriented in an east-west direction. They were connected by a north-south ditch, which drained to a sump in the southwest corner of the excavation. The sump was equipped with four pumps with a capacity of 500 gal/min each to remove inflows from ground water. Additional capacity was provided for the removal of inflows of storm water into the excavation. Dewatering for construction was terminated, in March 1983, and the water levels and flow pattern of the water table aquifer have returned near the preconstruction pattern. Dewatering is discussed in more detail in section 2.4.12.1.3.3.1, and in Appendix 2B.

Upon completion of construction, recharge is expected to be less in the plant area than prior to construction because of the structures, pavements, and surface drainage systems. Future recharge conditions will thus be such that the water table is not expected to rise as high as under preconstruction conditions. Power block structures are designed to accommodate ground water levels of el 165 ft; hence, no permanent dewatering system is required.

At the VEGP site the piezometric surface of the Tertiary aquifer, determined from observation wells set in the unnamed sands below the confining (marl) layer, slopes to the northeast toward the Savannah River. The river has cut through the marl in the vicinity of VEGP, and it is in hydraulic contact with the underlying Tertiary aquifer. This allows the aquifer to discharge to the river in this area. This is a relatively local condition, as downstream of the VEGP site, the confining layer is intact below the river, and the direction of ground water movement in the confined aquifers is to the southeast, the regional direction of migration of the aquifer.

Permeabilities of the aquifers and the confining layer were measured by field and laboratory methods. Details of the tests and the results are described in section 2.4.12.2.4.

Permeability of Barnwell sands and clayey sands (water table aquifer) was measured in situ at two exploratory holes at the plant site and in the laboratory on three undisturbed samples. The results ranged from 10 to 302 ft/year. One disturbed sample of Barnwell sands (considered for use as backfill) and two "grab" samples of backfill material were measured at different densities. The results ranged from 430 to 20,000 ft/year. Two test wells, each with an array of 4 observation wells, were used to conduct field tests in the Utley limestone, which is at the base of water table aquifer. Data from the tests indicated that the permeability of the Utley limestone varies considerably from place to place. Calculated permeabilities range from 96 to 125,400 ft/year. The results of permeability tests of water table aquifer materials are summarized in table 2.4.12-12 and 2.4.12-13.

In-situ permeability tests in the Blue Bluff marl (the confining layer) were conducted in 95 intervals at different depths in 28 exploratory holes. In 90 percent of the intervals tested, no measurable water inflow occurred. In only three holes was any inflow confirmed: two of these were in near-surface, weathered marl. The range of laboratory permeability measurements is from 5.2×10^{-3} ft/year to 8.8 ft/year. Results of permeability tests in the confining layer are summarized in table 2.4.12-10.

Large quantities of ground water are stored in the confined aquifers underlying the region of the VEGP site, and relatively small withdrawals have occurred to date. Although many small communities derive water from wells, the draft on the aquifers is low because of the low population density, limited industrial development, abundant surface waters, and abundant rainfall (agricultural crops of the area do not require significant quantities of applied water). Future use of ground water for industrial and domestic use is expected to increase to some degree, but withdrawals from the confined aquifers are estimated to be small. This assessment takes into account the planned requirements of the VEGP project, which will draw from the Cretaceous aquifer for makeup water (paragraph 2.4.12.1.3.).

A comprehensive ground water monitoring program has been implemented at the VEGP. This program has been designed to monitor piezometric levels in the water table aquifer, the confined aquifers (Tertiary and Cretaceous), and hydrostatic pore pressure in the confining layer (marl). The program consists of various wells monitoring the unconfined aquifer, the Tertiary aquifer, the Cretaceous aquifer, and the confining layer. The ground water monitoring program is discussed in detail in paragraph 2.4.12.2.3.1.

2.5.4.7 Response of Soil and Rock to Dynamic Loading

This subject is addressed in subsections 3.7.1 and 3.7.2.

2.5.4.8 Liquefaction Potential

The liquefaction potential of the upper sand stratum was evaluated using the standard penetration test blow counts obtained during the investigation and the simplified procedure of Seed and Idriss.[8] This evaluation is described in detail in reference 1 and indicates that the upper sand below the ground water level is susceptible to liquefaction when subjected to the maximum SSE acceleration of 0.2 g. Based on this evaluation the upper sand stratum was removed to an approximate elevation of 130 to 135 ft in the power block area. Select sand and silty sand compacted to 97 percent of the maximum density determined by ASTM D 1557 is placed from the top of the marl stratum to the design elevation of the various power block structures with the exception of an area north of the turbine building as noted in paragraph 2.5.4.5.2. The liquefaction potential of compacted backfill in the power block area was evaluated for the PSAR and is discussed in detail in reference 1. The analysis indicated a factor of safety against liquefaction on the order of 1.9 to 2.0. The analysis was done utilizing cyclic strength data obtained from tests on specimens of compacted backfill.

During the investigations for borrow sources, additional dynamic data were obtained to supplement the cyclic strength data obtained previously and reported in reference 1. Cyclic triaxial tests were performed on compacted specimens of sands obtained from stockpile A and borrow area 1. The cyclic stress ratios versus the number of cycles to 2.5 percent total strain (initial liquefaction) are shown on drawings AX6DD395 and AX6DD396. The results show that the stress ratios for the cleaner sands are substantially lower than for silty sands. In the liquefaction analysis done previously(1) stress ratios for the cleaner sands were used to obtain the safety factor against liquefaction. Therefore, the cyclic stress ratios for the cleaner sands obtained during investigations for borrow material were compared with values obtained during the PSAR investigations. A comparison of the two test data is shown on drawings AX6DD397 and AX6DD398. The comparison indicates that the PSAR data represent a lower bound of test values. If the liquefaction analysis were performed using the upper bound values obtained during the borrow investigation, a factor of safety higher than 1.9 to 2.0 would have been obtained for the design SSE conditions.

From the discussion presented above, it is concluded that there exists an adequate factor of safety against liquefaction for backfill compacted to 97 percent of the maximum density obtained by ASTM D 1557.

2.5.4.9 Earthquake Design Basis

The design bases for the SSE and operating basis earthquake are addressed in paragraphs 2.5.2.6 and 2.5.2.7.

2.5.4.10 Static Stability

2.5.4.10.1 Bearing Capacity of Compacted Backfill and Marl Bearing Stratum Supporting Mat Foundations

The ultimate bearing capacity of the backfill is evaluated for the backfill consisting of sand and silty sand compacted to 97 percent of the maximum dry density (ASTM D 1557).

The ultimate bearing capacity of a soil is defined as the load at which shear failure will occur. A factor of safety of at least three is considered acceptable for the allowable bearing capacity for static loads. For dynamic loads, a minimum safety factor of two is required. The net ultimate bearing capacity of sand backfill supporting a rectangular foundation above the water table is given by the expression:(9)

$$q_{ult} = \gamma D n_q \left(1 + 0.2\frac{B}{L}\right) + 1/2\ \gamma B \left(1 - 0.3\frac{B}{L}\right) N\gamma - \gamma D$$

where:

q_{ult} = the net ultimate bearing capacity (k/ft^2).

γ = the total unit weight of the backfill (k/ft^3).

D = depth of embedment of the footing (ft).

B = width of the footing (ft).

L = length of the footing (ft).

$N_q, N\gamma$ = dimensionless bearing capacity factors.

For a circular foundation the expression is:

$$q_{ult} = 1/2\ \gamma B N\gamma\ (0.6) + \gamma D\ (N_q - 1).$$

If the water table is located at the bottom of a foundation supported by cohesionless material, the values obtained from the above expressions are approximately halved.

For a rectangular foundation supported entirely on the marl bearing stratum, the net ultimate bearing capacity is given by the expression:[10]

$$q_{ult} = cN_c \left(1 + 0.2\frac{D}{B}\right) \left(1 + 0.2\frac{B}{L}\right)$$

c = undrained shear strength of the marl bearing stratum (k/ft^2).

N_c = dimensionless bearing capacity factor.

For a circular foundation:

$$q_{ult} = 1.2\ cN_c.$$

For sand and silty sand backfill compacted to 97-percent relative compaction (ASTM D 1557), strength parameters of $c=0$ and $\phi=34°$ derived from triaxial test data were used (paragraph 2.5.4.5.2). For the marl bearing stratum (Blue Bluff marl), strength parameters of $c=10\ k/ft^2$ and $\phi=0$ were used (paragraph 2.5.4.2.2).

A summary of power block structure loads and allowable bearing capacity is presented in table 2.5.4-12. The bearing capacity of compacted backfill was determined to be very high for the large structures under consideration. Consequently, the strength of the marl bearing stratum will govern the allowable bearing capacity of the plant structures. Since the net allowable bearing pressures in all cases far exceed the net static loads, bearing capacity of the supporting soils is not a problem. Settlement of structures will therefore govern the allowable bearing pressures.

2.5.4.10.2 Settlement of Power Block Structures on Mat Foundations

When a load of limited size is applied to a sand stratum, it will undergo shear deformation beneath the loaded area. The vertical component of this deformation is called the "initial" or elastic settlement which will occur immediately upon application of the load. Sand and silty sand drain relatively fast upon loading, and therefore, long-term volume changes with dissipation of pore water pressure do not occur in these soils.

Therefore, while estimating settlements in these soils, only elastic settlements based upon the Young's modulus of elasticity were considered.

When a load is applied to a column of saturated clay soil, the clay will deform and pore water pressures will be induced in it. Immediately after the application of the load, little, if any, pore water will be squeezed out and the clay will deform at constant volume. The vertical component of movement is called the initial or elastic settlement. In the course of time, pore water will be squeezed out of the clay and its volume will decrease. The vertical component of this volume decrease is known as "consolidation" settlement. Therefore, for estimating settlements in the marl bearing stratum, both elastic and consolidation settlements were taken into consideration.

Soil stresses and settlements were computed using the Settlement Problem Oriented Language (SEPOL) computer program developed at Massachusetts Institute of Technology.[11] The sand backfill, the marl bearing stratum, and the lower sand stratum were treated as layered systems and divided into layers of different thicknesses. The SEPOL program computes the stress and strain at the midpoint of each layer based on the theory of elasticity. The elastic settlement is computed by multiplying the calculated strain in the layer by the layer thickness. Consolidation settlement is obtained using the calculated vertical stress and the rebound portion of the laboratory consolidation test curve. The settlement of each layer is determined by taking the sum of elastic and consolidation settlement for the layer, and the total settlement is calculated as the sum of the settlements contributed by each layer.

The following soil parameters for sand and silty sand backfill, the marl bearing stratum, and the lower sand stratum are used in the calculation of elastic settlements:

Soil Parameter	Sand, Silty Sand Backfill	Marl Bearing Stratum	Lower Sand Stratum
Moist unit weight (lb/ft^3)	120	-	-
Saturated unit weight (lb/ft^3)	130	115	115
Submerged unit weight (lb/ft^3)	68	53	53

REV 9 5/00
REV 8 10/98
REV 7 9/97
REV 5 9/95

Poisson's ratio	0.4	0.5	0.4
Young's modulus (k/ft^2)	1500	10,000	See figure 2.5.4-3

For compacted backfill, the Young's modulus of 1500 k/ft^2 was obtained from static triaxial tests. For the marl bearing stratum, the value of Young's modulus of 10,000 k/ft^2 was derived from the heave data, in situ pressure meter, and seismic velocity test data. The values of Young's modulus for the lower sand stratum (figure 2.5.4-3) are based on shear wave velocity data and empirical correlations between shear wave (low-strain) Young's modulus and higher-strain static Young's modulus. Using the available shear wave velocity data for the upper 140 ft of the lower sand stratum from table 2.5.4-5, a plot of low strain Young's modulus versus depth is obtained as shown on figure 2.5.4-3. Values of the low-strain Young's modulus below a depth of 140 ft in the lower sand stratum were obtained by extrapolation using the Seed-Idriss relationship:[18]

$$G_d = 1000K_2 (\sigma_m')^{1/2}$$

where

K_2 = a parameter that depends on the void ratio and the strain amplitude of motions.

σ_m' = mean effective stress in lb/ft^3.

G_d = the low strain shear modulus in lb/ft^2.

The low strain Young's modulus (E_d) is obtained from the equation:

$$E_d = 2(1+\upsilon)G_d$$

Where υ is the Poisson's ratio of the lower sand stratum.

Based on studies made by Swiger[19] the static Young's modulus for the lower sand stratum may be obtained by taking it equal to about 1/3 the low strain value (E_d). Therefore, from figure 2.5.4-3, the static Young's moduli of the various layers in the lower sand stratum are as follows:

Depth Below Grade (ft)	E(k/ft^2)
160-260	10,800
260-460	13,500
460-760	17,500
760-1160	22,000

The lower sand stratum is approximately 1000-ft thick based on seismic investigations (paragraph 2.5.4.2.3). For the settlement analyses, the lower sand stratum was divided into four layers of thickness; 100, 200, 300, and 400 ft, respectively. Each layer was assigned an appropriate value of Young's modulus as shown above. Total elastic settlements were obtained by adding the elastic settlements obtained in the backfill, marl, and the various layers of the lower sand stratum. Elastic settlement of each layer was calculated by multiplying the strain (Σ_z) in the layer by the height of the layer. The strain (Σ_z) is given by the following expression: [9]

$$\Sigma_z = \frac{1}{E}\left\{\sigma - \upsilon\,(\sigma_x + \sigma_y)\right\}$$

where

$\sigma_z' \sigma_x' \sigma_y$ = the principal stresses induced at center of the layer by the loads.

E = Young's modulus.

υ = Poisson's ratio.

The stresses σ_z, σ_x and σ_y were obtained at the midpoint of each layer from the SEPOL computer program. In calculating stresses and settlements, both the weight of the backfill and structure loadings were taken into consideration.

The consolidation settlement was computed using the following formula: [14, 15]

$$\rho_c = \frac{C_c h}{1 + e_o} \log \frac{(\sigma_\upsilon' + \Delta\sigma_\upsilon)}{\sigma_\upsilon}$$

where:

ρ_c = consolidation settlement.

C_c = compression index.

h = layer thickness.

e_o = initial void ratio.

σ_υ' = in situ effective vertical stress at midpoint of the marl stratum.

$\Delta\sigma_\upsilon$ = effective additional vertical stress at middepth of the marl stratum due to the surface load.

The thickness of the marl stratum was taken as 70 ft for purposes of computing consolidation settlement. Considering the highly preconsolidated nature of the marl stratum, the compression index (C_c) used in the above formula was taken equal to the rebound index (C_r) obtained from laboratory consolidation tests.[1] The value of $C_c/1+e_o$ was determined for each consolidation test, and an average of 0.0046 was used for settlement calculations.

The results of the settlement analysis of the power block structures are presented in figure 2.5.4-1. The estimated total settlement at the center and corner of each structure are shown. Total settlements include both elastic and consolidation settlements of the marl stratum and elastic settlements of the sand backfill and the lower sand stratum. Due to the highly preconsolidated nature of the marl stratum, the consolidation settlements are small, compared to the elastic settlements. The total settlements do not include settlements in the marl and lower sand strata as a result of fill under foundations, since these settlements will occur prior to placement of building loads.

2.5.4.10.3 Caisson Foundation in Radwaste Solidification Building

2.5.4.10.3.1 Caisson Ultimate Downward Capacity. The ultimate downward capacity of a caisson supporting the radwaste solidification building is given by:

$$V_u = q_{nu} \quad A_b + f_s \quad A_s$$

where:

V_u = ultimate downward capacity of caisson (k).

q_{nu} = net ultimate bearing capacity of caisson (k/ft^2).

f_s = frictional resistance of caisson shaft (k/ft^2).

A_b = area of caisson base (ft^2).

A_s = peripheral area of caisson shaft (ft^2).

The net ultimate bearing capacity (q_{nu}) of a caisson foundation bearing on marl is given by:

q_{nu} = 9 S_u, where S_u = undrained shear strength of marl.

= 90 k/ft^2 for S_u = 10 k/ft^2.

For computing the frictional resistance along the caisson shaft embedded in marl, the adhesion between the marl and the concrete is taken as 1.5 k/ft^2. Shaft friction in the upper sand stratum is conservatively ignored.

The equation for the ultimate downward capacity of a caisson bearing on marl can therefore be rewritten as follows:

$$V_u = 90\ A_b + 1.5\ pH_m$$

where:

V_u = ultimate downward capacity of caisson (k).

A_b = area of caisson base (ft^2).

p = perimeter of caisson shaft (ft).

H_m = depth of caisson penetration in marl (ft).

The estimated total dead plus sustained live load transmitted to the radwaste building foundation is approximately 116,000 k. The foundation system consists of 54, 8-ft diameter caissons spaced 18 ft center to center. The required design capacity per caisson is approximately 2150 k. An 8-ft diameter caisson with 20 ft of penetration into the marl would develop an ultimate downward capacity of approximately 5280 k and is satisfactory for radwaste solidification building foundation support.

2.5.4.10.3.2 Caisson Settlement. A load caisson would undergo settlement as a result of three causes:

A. Elastic compression of the shaft of the caisson.

B. Elastic compression of the marl on which the caisson is supported.

C. Consolidation settlement of the marl due to dissipation of pore water pressure occurring over a period of time.

The total settlement that would result at the top of the caisson would be the sum of A, B, and C above.

The applied pressure at the top of an 8-ft diameter caisson is estimated to be approximately 40 k/ft^2. The total settlement of the caisson with an applied stress of 40 k/ft^2 at the top is not expected to exceed 1 in.

2.5.4.10.4 Foundation Heave

Prior to excavations, the soil conditions in the power block consisted of an upper sand stratum, followed by a 70-ft layer of the clay marl bearing stratum and a lower stratum of dense sand with clay to a 750-ft depth. All of the upper sand stratum was removed in the power block area. Mass excavations were carried out from the existing grade elevation of 210 ft to the top of the clay bearing stratum which is at an approximate elevation of 130 ft. The excavation commenced in May 1974 and continued through September 1974. Because of project suspension, no excavation was done from September 1974 to February 1977. Upon restart of the project in February 1977, further excavation was resumed and it was completed in August 1977. During this period of time the heave of the clay marl stratum resulting from the removal of the overburden was frequently observed and recorded by GPC. Heave values were measured at different locations within the power block area.

An average heave of approximately 1.25 in. was measured in the power block area. Field records indicate that practically the entire heave as a result of the excavations has probably occurred over the period of time of the excavations.

2.5.4.10.5 Lateral Earth Pressures

The lateral earth pressure on subterranean walls of the power block structures was computed for sand and silty sand backfill having the properties discussed in paragraph 2.5.4.5. The coefficient of earth pressure "at rest" is used and a value of 0.7 (appropriate for 97-percent relative compaction) are considered in the computations. Additionally, the walls are

designed for surcharge loadings and dynamic soil pressures where appropriate.

2.5.4.10.6 Hydrostatic Ground Water Pressures

The maximum predicted ground water elevation is 35 ft above the top of the clay marl bearing stratum. The effect of hydrostatic ground water pressures was considered in evaluating bearing capacity and settlement of soils supporting the power block structures, as discussed in paragraph 2.5.4.10.1.

Based on information obtained from piezometers extending into the lower sand stratum, the piezometric surface of the water contained in the lower sand stratum is approximately 20 to 30 ft below the top of the clay marl bearing stratum. This pressure has no effect on safety-related structures supported on compacted backfill and the marl stratum.

2.5.4.11 Design Criteria

As discussed in paragraph 2.5.4.2, the upper sand stratum would have a potential for liquefaction from an occurrence of the SSE event at the site. Further, the shelly limestone layer is characterized by voids and discontinuities and is unsuitable for foundation support from the standpoint of bearing capacity and settlement. Therefore, all Category 1 structures are supported on either the clay marl bearing stratum or on sand and silty sand backfill compacted to an average of 97 percent of the maximum density determined by ASTM D 1557. The allowable bearing pressure under both static and dynamic conditions satisfies these requirements:

A. A minimum factor of safety of three against shear failure under sustained dead load plus live load.

B. A minimum factor of safety of two against shear failure under sustained dead load plus maximum live load.

C. Structure settlements within tolerable limits for sustained dead load plus live load.

Evaluation of the liquefaction potential of Category 1 backfill is based on a minimum factor of safety of 1.5 against liquefaction. Computed factors of safety against liquefaction and bearing capacity failure are identified in paragraphs 2.5.4.8 and 2.5.4.10, respectively. Methods of analyses, including

assumptions made in the analyses, are also discussed in the referenced paragraphs.

2.5.4.12 Techniques to Improve Subsurface Conditions

2.5.4.12.1 Foundations in the Clay Marl Stratum

No special treatment was required to improve foundation conditions beneath Category 1 structures supported on the marl stratum.

2.5.4.12.2 Foundations in Soil

Category 1 foundations in soil are supported on sand and silty sand backfill compacted to an average of at least 97 percent of the maximum determined by ASTM D 1557. This subject has been addressed in paragraph 2.5.4.5.

2.5.4.13 Subsurface Instrumentation

2.5.4.13.1 Heave Instrumentation

The heave of the clay marl bearing stratum was monitored during the period of excavations in the power block area from 1974 to 1977.

The general procedure for measuring heave is outlined below:

A. Two permanent reference benchmarks were established far outside the excavation and away from all related construction activity.

B. Nine heave point tips with polyvinyl chloride protective sleeves were installed at selected locations approximately 5 ft below the eventual bottom of the excavation.

C. Invar steel reading rods were lowered through each protective sleeve to mate with the heave point tip. The rods were tensioned to alleviate any "snaking" and to rigidly clamp them into position.

D. The heave point tip elevation was determined by conducting a first order level survey from a benchmark to the top of the reading rods.

The locations of the heave points are shown in figure 2.5.4-2. Three of the heave points were damaged after installation; therefore, data from only six heave points are available. A report of heave point measurements is presented in reference 16 and summarized in table 2.5.4-13. The data show that the measured heave of the marl stratum ranged from 0.6 to 1.7 in., with an average of 1.25 in. Results are also plotted on drawings AX6DD399 and AX6DD400.

2.5.4.13.2 Settlement Monitoring

2.5.4.13.2.1 Program Description

The foundation design parameters for all power-block structures were based on measured soil parameters obtained by field exploration and laboratory testing. The structures and the interconnecting piping are designed for building settlement. A settlement monitoring program was initiated to record settlements at various locations in the structures.

This monitoring program consists of two permanent benchmarks installed as reference points for measurements and a total of over 175 monitoring points. The locations of settlement markers are shown on drawing AX2D55V001. The settlement monitoring program is a separate program controlled by plant procedures.

2.5.4.13.2.2 Marker Reading Frequency

Markers were originally read at approximately 60-day intervals. Subsequent to October 1987, the 58 markers which have been demonstrated to be essentially stable have been read at maximum 6-month intervals and readings on two redundant markers (423-1 and 423-1B) have been discontinued (references 21, 22, and 24). Subsequent to September 1991, an additional 63 markers, which have been demonstrated to be essentially stable, have been read at maximum 6-month intervals, and readings on five markers associated with the radwaste solidification building and radwaste transfer tunnel (155, 158, 159-R, 160-R, and 161-R) have been discontinued. Subsequent to June 1, 1994, all markers except four (249, 252, 260, and 292) have been demonstrated to be essentially stable and will be read annually. Subsequent to July 1, 1995, all markers have been demonstrated to be essentially stable and will be read annually. In addition to the established reading frequencies described above, either of the two following conditions will result in the immediate monitoring of the settlement markers.

Settlement monitoring will be performed immediately after any earthquake event equal to or exceeding a free-field acceleration of 1/2 OBE (0.06g). A settlement survey will also be performed if the groundwater level in the power block area drops more than 10 ft. below the reference groundwater level of 160 msl in more than one observation well monitoring the backfill.

2.5.4.13.2.3 Long Term Monitoring Commitments

Settlement monitoring for both units will be continued for important markers, as described in paragraph 2.5.4.13.2.4, through the first year following issuance of the operating license for Unit 2. At the end of this period, a brief technical report was provided to the NRC with supporting settlement data and graphical plots, and an evaluation of the settlement effects that justified a reduction in the frequency and number of markers monitored.

2.5.4.13.2.4 Marker Relocations

Throughout the life of the plant, important settlement markers that are destroyed or become inaccessible will be replaced with markers as near as possible to their original locations so that continuous readings can be provided and the total settlement at the original locations can be determined. Important settlement markers are defined as those markers located in safety-related structures whose total settlements have exceeded 1 in. and/or which are needed to continue the determination of differential settlements across a structure, or to establish differential settlements at piping penetrations.

In addition to markers which become inaccessible or are accidentally destroyed, a maximum of 96 markers are being moved from their original locations to new locations which provide more convenient access (references 21 and 22). The original markers will remain in place and will be available should any future correlations be required. Markers relocated to the outside of structures or to higher elevations for more convenient access, will remain as close as practicable to their original plan view locations (reference 23).

2.5.4.13.2.5 Total Structure Settlement

Actual total structure settlements have been compared with the predicted totals in FSAR figure 2.5.4-1 and were provided in a report to the NRC staff 3 months prior to fuel load of Unit 1 (reference 20). If total predicted settlements are exceeded, the settlement analysis will be reevaluated.

For additional discussion, see reference 25.

2.5.4.13.2.6 Differential Settlement Effect on Piping

Actual differential settlements between structures will be compared to those used in design. Piping has been installed as late in the construction schedule as practicable, and supports on either side of building interfaces typically have not been installed until structure construction is essentially complete. This has resulted in most structure settlements having taken place prior to permanent installation of piping. Subsequent to permanent installation of piping, differential settlement is monitored at building interfaces.

If future evaluations of the actual differential settlement indicate that 75 percent of the amount used in the design of piping has been reached, the situation will be reviewed. If it appears that the design differential settlement may be exceeded, the piping will be reanalyzed for an increased differential settlement and/or the supports will be adjusted or modified to satisfy the design requirements.

For additional discussion, see references 26 and 27.

2.5.4.13.2.7 Differential Settlement within Structures

The effect of differential settlements within structures on the structures themselves is addressed by reviewing the maximum net slope of the deflection curve (δ/ℓ) relative to structure tilt. This review is performed for large power block structures, auxiliary building, control building, and fuel handling building. (Refer to reference 26.) Unless differential settlement within structures approach a value of δ/ℓ equal to 1/670, it is deemed unnecessary to evaluate such effects on the design of structures. Even at this net slope, no adverse effects are likely.

An update of differential settlements was provided in a report to NRC staff 3 months prior to fuel load of Unit 1 (reference 20). The report included an assessment of the net slope of the deflection curve (δ/ℓ) relative to structural tilt. The net slope was demonstrated to be well within the 1/670 limit. The review was performed for the control building, the auxiliary building and the fuel handling building. These large power block structures contain the number of markers required and the accessibility needed to perform such a review. The report, however, included the total and differential settlement for all other safety-related structures to demonstrate that the

settlements which occurred were reasonable and within predicted limits.

The slope of the deflection curve relative to structure tilt for the above structures will be reviewed when settlement data warrants evaluation.

For additional discussion, see reference 26.

2.5.4.14 Construction Notes

There have been no significant construction problems, apart from the erosion of Category 1 backfill, that occurred as a result of heavy rainfall in early November 1979. Areas within the power block subjected to erosion are described in detail in a report submitted to the Nuclear Regulatory Commission.[14] The report outlined steps that had been initiated subsequent to the erosion to repair the affected and adjacent areas and to facilitate resumption of backfilling operations in the power block area. Also included in the report were recommended methods of repair and a description of future erosion and ground water control measures to prevent a recurrence of the problem.

All erosion in the power block backfill was satisfactorily repaired according to recommended procedures, with the exception of minor deviations that were necessitated by practical considerations.

Extensive field and laboratory tests were performed to verify the extent of disturbed material in the eroded areas. These tests were used to verify the competency of the backfill adjacent to the foundations of various Category 1 structures. The evaluation of the effect of erosion on Category 1 structure foundations was based on data developed during testing and visual observations made during the entire period of repair. The data and evaluation are contained in reference 15. The field testing and evaluations described in reference 15 provided adequate data which defined the disturbed zones in Category 1 backfill. All erosion was successfully repaired. This evaluation has established that there is no detrimental effect on the existing structures as a result of the heavy rainfall of early November 1979.

2.5.4.15 Standard Review Plan Evaluation

The Standard Review Plan calls for probabilistic as well as deterministic analyses of liquefaction potential at the site.

The liquefaction analyses performed for VEGP were of the deterministic type only.

The foundation properties for materials underlying Seismic Category 1 structures are known with much greater accuracy at VEGP than at most nuclear power plant sites. This is because all potentially liquefiable foundation materials have been removed and replaced with homogeneous, well-compacted structural backfill. All Seismic Category 1 structures are founded either on this backfill or on the underlying very competent marl.

The deterministic evaluation of the liquefaction potential described in subsection 2.5.4 involved use of extensive laboratory test data that covered the upper and lower bound cyclic shear strengths of compacted Category 1 backfill. The deterministic analyses have demonstrated (paragraph 2.5.4.8) that an adequate factor of safety exists against liquefaction.

The backfill supporting Category 1 structure foundations has been placed under extremely well-controlled conditions and exceeds the minimum design compaction requirements (97 percent of the maximum density determined by ASTM D 1557). The auxiliary building and nuclear service cooling water towers are supported on the marl stratum and surrounded by compacted backfill. The remaining Category 1 structures, including containment, control, fuel, and diesel generating buildings, are supported on compacted sand and silty sand backfill. The inplace density of the sand backfill is so high that, when sheared, the backfill increases in volume and relieves all excess pore water pressures. Liquefaction will therefore not occur in compacted backfill under SSE conditions. The properties of the marl stratum have been well established based on extensive field and laboratory test data and show that it will adequately support Category 1 structures and that it is nonliquefiable. The backfill surrounding Category 1 structures is of sufficient width and length (paragraph 2.5.4.5) such that in the event of an SSE, none of the Category 1 structures will be affected by the potential liquefaction of the <u>in situ</u> upper sand stratum in the areas outside the backfill.

Because the foundation conditions are so well controlled and defined as described above and because liquefaction is shown to be clearly not possible under the design SSE, a probabilistic evaluation of liquefaction potential is not considered necessary for the VEGP site.

TABLE 3.2.2-1 CONTENTS

CLASSIFICATION OF STRUCTURES, COMPONENTS, AND SYSTEMS

Contents	Sheet No.
NUCLEAR STEAM SYSTEM SUPPLIER (NSSS) AND NUCLEAR AUXILIARY SYSTEMS	
Reactor Coolant System	1
Reactor Head Vent System	3
Safety Injection System	3
Residual Heat Removal System	5
Containment Spray System	6
Chemical and Volume Control System	7
Boron Recycle System	12
Containment Isolation System	13
WATER SYSTEMS	
Nuclear Service Cooling Water (NSCW) System	14
Component Cooling Water System	15
Auxiliary Component Cooling Water System	16
Spent Fuel Cooling and Purification System	16
Reactor Makeup Water System	17
RADWASTE SYSTEMS	
Waste Processing System - Liquid	18
Waste Processing System - Gaseous	23
Steam Generator Blowdown System	24
Backflushable Filter System	25
SECONDARY CYCLE SYSTEMS	
Main Steam System	25
Auxiliary Feedwater System	27
Condensate and Feedwater System	28
Power Conversion System	29
Condenser Air Ejector System	30
Circulating Water System	30
River Intake Structure Systems	31
Condensate Chemical Injection System	32
Condensate Filter Demineralizer System	33
Plant Makeup Water Well System	34
Plant Makeup Water Treatment System	35

TABLE 3.2.2-1 CONTENTS

Contents	Sheet No.
Plant Makeup Water Treatment System Waste Neutralization System	36
SERVICE SYSTEMS	
Demineralized Water System	36
Diesel Generator Systems	36
Fire Protection Systems	38
Fire Protection Systems - Seismic Category 1	39
Auxiliary Gas Systems (N_2, H_2, and O_2)	39
NSSS Liquid Sampling System	39
NSSS Gas Sampling System	40
Post-Accident Sampling System	40
Turbine Plant Sampling System	40
Control Building Drain System	41
Auxiliary Building Flood Retaining Rooms, Alarms, and Drains	41
Containment, Auxiliary Building, and Miscellaneous Drain Systems	42
Turbine Building Drain System	44
Turbine Lube Oil Storage and Filtration System	44
Auxiliary Steam System	45
Turbine Generator H_2 and H_2 Seal Oil System	45
Turbine Generator CO_2 System	46
Turbine Plant Closed Cooling Water System	46
Turbine Plant Cooling Water System	46
Waste Water Effluent System	48
Instrument and Service Air System	50
Potable Water System	52
Reactor Coolant System Leak Detection System	52
Miscellaneous Leak Detection System	53
Fuel Handling Building Drain System	53
Utility Water System	53
HEATING, VENTILATING, AND AIR CONDITIONING (HVAC) SYSTEMS	
Containment Air Cooling System	53
Containment Lower Level Air Circulating System	53
Containment Preaccess Filter System	54

REV 9 5/00
REV 8 10/98
REV 2 3/92

LIST OF FIGURES

3F-4	Evaluation of RCS Loop Branch Line Breaks
3F-5	Jet Impingement Barriers
3.5.1-1	Missile Ejection Angles
3.5.1-2	Missile Trajectories
3.6.2-1	Loss of Reactor Coolant Accident Boundary Limits
3.6.2-2	Typical U-Bar Restraint
3.6.2-3	Typical EAM Restraint
3.7.B.1-1	Safe Shutdown Earthquake Horizontal Response Spectra
3.7.B.1-2	Safe Shutdown Earthquake Vertical Response Spectra
3.7.B.1-3	Operating Basis Earthquake Horizontal Response Spectra
3.7.B.1-4	Operating Basis Earthquake Vertical Response Spectra
3.7.B.1-5	Synthetic Time History Horizontal Direction
3.7.B.1-6	Synthetic Time History Vertical Direction
3.7.B.1-7	Damping Values for Cable Trays and Supports
3.7.B.1-8	Damping Ratios vs Shear Strain for Compacted Sand Backfill
3.7.B.1-9	Damping Ratios vs Shear Strain for Clay Marl Bearing Stratum
3.7.B.1-10	Damping Ratios vs Shear Strain for Lower Sand Stratum

REV 9 5/00
REV 8 10/98
REV 6 4/97
REV 5 9/95
REV 1 3/91

LIST OF FIGURES (Continued)

3.7.B.1-11 Alternate Damping Values for ASME Boiler and Pressure Vessel Code, Section III, Division 1, Code Class 1,2, and 3 Piping Systems

3.7.N.1-1 Alternate Damping Values Used for Seismic Analysis of Piping for Westinghouse-Analyzed Piping Systems*

3.7.B.2-1 Lumped Parameter Model of Diesel Generator Building

3.7.B.2-2 Power Block Plan View Showing Sections for Finite Element Soil-Structure Interaction Flush Models

3.7.B.2-3 Flush Model Along Section 2 of Figure 3.7.B.2-2

3.7.B.2-4 Flush Model Along Section 4 of Figure 3.7.B.2-2

3.7.B.2-5 G/Gmax vs Shear Strain for Compacted Sand Backfill

3.7.B.2-6 G/Gmax vs Shear Strain for Saturated Clay Marl-Bearing Stratum

3.7.B.2-7 G/Gmax vs Shear Strain for Lower Sand Stratum

3.7.B.2-8 Auxiliary Building el 109 ft 0 in., SSE Horizontal

3.7.B.2-9 Nuclear Service Cooling Water Tower el 128 ft 0 in., SSE Horizontal

3.7.B.2-10 Containment Building el 144 ft 0 in., SSE Horizontal

3.7.B.2-11 Fuel Handling Building el 152 ft 0 in., SSE Horizontal

3.7.B.2-12 Control Building el 173 ft 0 in., SSE Horizontal

3.7.B.2-13 Auxiliary Building el 109 ft 0 in., OBE Horizontal

3.7.B.2-14 Nuclear Service Cooling Water Tower el 128 ft 0 in., OBE Horizontal

3.7.B.2-15 Containment Building el 144 ft 0 in., OBE Horizontal

TABLE 3.2.2-1 (SHEET 2 OF 99)

Principal System and Components	(a) Location Unit 1	Unit 2	(b) Source of Supply	(c) Quality Group	(d) VEGP Safety Class	(e) Seismic Category	(f) Codes and Standards Designator	(g) Principal Construction Code	(h) Q-List	(i) Safety Related	(j) Environmental Designator	(k) Comments
19. Thermal barrier	C	C	W	A	1	1	1	III-1	Y	Y	1-A	
20. Seal 2 housing	C	C	W	B	2	1	2	III-2	Y	Y	1-A	
21. Pressure retaining bolts	C	C	W	A	1	1	1	III-1	Y	Y	1-A	
22. Main flange	C	C	W	A	1	1	1	III-1	Y	Y	1-A	
23. RCP motor	C	C	W	NA	6	2	E	NEMA MG1	N	N		
24. Shaft coupling	C	C	W	NA	2	1	NA	NA	Y	Y	1-A	
25. Spool piece	C	C	W	B	2	1	2	Mfg	Y	Y	1-A	
26. Armature	C	C	W	B	2	1	2	NEMA MG1	Y	Y	1-A	
27. Flywheel	C	C	W	NA	2	1	NA	mfg	Y	Y	1-A	
28. Motor bolting	C	C	W	NA	2	1	NA	NEMA MG1	Y	Y	1-A	
29. Upper oil cooler (tube side - ACCW)	C	C	W	C	3	1	3	III-3	Y	Y		
30. Upper oil cooler (shell side - oil)	C	C	W	C	3	1	3	III-3	Y	Y	1-A	
31. Lower oil cooling coil	C	C	W	C	3	1	3	III-3	Y	Y		
32.			(This line has been intentionally left blank.)									
33. RTD thermo-wells	C	C	W	A	1	1	1	III-1	Y	Y	1-A	
34. RCS loop piping	C	C	W	A	1	1	1	III-1	Y	Y		
35. Valves >O2 in.	C	C	W	A	1	1	1	III-1	Y	Y		
36. Other piping and valves ≤2 in.	C	C	B	A	1	1	1	III-1	Y	Y		
37. Safety-related valve operators	C	C	W	NA	1	1	E	NEMA MG1	Y	Y		
38. Reactor vessel supports	C	C	W	NA	0	1	C	III-NF	Y	Y		
39. Steam generator supports	C	C	W	NA	0	1	C	III-NF	Y	Y		
40. Pressurizer supports	C	C	W	NA	0	1	C	III-NF	Y	Y		

TABLE 3.2.2-1 (SHEET 6 OF 99)

Principal System and Components	(a) Location Unit 1	Unit 2	(b) Source of Supply	(c) Quality Group	(d) VEGP Safety Class	(e) Seismic Category	(f) Codes and Standards Designator	(g) Principal Construction Code	(h) Q-List	(i) Safety Related	(j) Environmental Designator	(k) Comments
7. Safety-related valve operators			W	NA	1	1	E	NEMA MG1	Y	Y		
8. RHR pump seal coolers	AB-D48 AB-D49	AB-D21 AB-D22	B	B	2	1	2	III-2	Y	Y	VIII	
9. Emergency sump screen	C	C	B	B	2	1	2	III-2	Y	Y		
10. Encapsulation vessels	FB-C07 AB-C105	FB-C01 AB-C04	B	NA	0	1	C	III-MC	Y	Y	VII	
CONTAINMENT SPRAY SYSTEM												
1. Containment spray pumps	AB-D76 AB-D77	AB-D04 AB-D05	W	B	2	1	2	III-2	Y	Y	VIII	
2. Containment spray pump motors	AB-D76 AB-D77	AB-D04 AB-D05	W	NA	1	1	E	NEMA MG1	Y	Y	VIII	
3. Spray nozzles	C	C	W	B	2	1	2	III-2	Y	Y	VIII	
4. Spray additive tank	AB-D74	AB-D04	W	C	3	1	3	III-3	Y	Y	VIII	Note aq
5. Spray eductors	AB-D76 AB-D77	AB-D04 AB-D05	W	B	2	1	2	III-2	Y	Y	VIII	Note aq
6. Process valves and piping from RWST, containment sumps, and educator inlet check valves to spray nozzles			W,B	B	2	1	2	III-2	Y	Y		Note aq
7. Process valves and piping downstream of spray additive tank to eductor inlet check valves			W,B	C	3	1	3	III-3	Y	Y		
8. Safety-related instrumentation			W	NA	1	1	J	mfg	Y	Y		Note s
9. Safety-related valve operators			W	NA	1	1	E	NEMA MG1	Y	Y		
10. Encapsulation	FB-C08	FB-C02	B	NA	0	1	C	III-MC	Y	Y	VIII	
vsssels	AB-C105	AB-C04										
11. Trisodium phosphate baskets	C	C	S	NA	6	1	C	AISC	N	N		

TABLE 3.2.2-1 (SHEET 12 OF 99)

Principal System and Components	(a) Location Unit 1	Unit 2	(b) Source of Supply	(c) Quality Group	(d) VEGP Safety Class	(e) Seismic Category	(f) Codes and Standards Designator	(g) Principal Construction Code	(h) Q-List	(i) Safety Related	(j) Environmental Designator	(k) Comments
BORON RECYCLE SYSTEM												
1. Recycle evaporator feed pumps	AB-D34 & D35	shared	W	D	4	1	4	mfg	N	N		au
2. Recycle evaporator feed pump motors	AB-D34 & D35	shared	W	NA	6	2	E	NEMA MG1	N	N		au
3. Boron recycle holdup tanks	AB-D57 & D33	shared	B	C	3	1	3	III-3	Y	Y	VIII	au
4. Recycle evaporator feed backflushable filter housings	AB-B	shared	B	D	4	1	4	VIII	N	N		au
6. Recycle evaporator feed demineralizers	AB-C141	shared	W	D	4	1	4	VIII	N	N		au
7. Recycle evaporator condensate demineralizer	AB-C140	shared	W	D	4	2	4	VIII	N	N		au
10. Recycle evaporator condensate filter	AB-D96	shared	W	D	4	2	5	III-3	N	N		au
11. Piping and valves between recycle holdup tanks and recycle evaporator package			W,B	D	4	1	4	B31.1	N	N		au

TABLE 3.2.2-1 (SHEET 13 OF 99)

Principal System and Components	(a) Location Unit 1 Unit 2	(b) Source of Supply	(c) Quality Group	(d) VEGP Safety Class	(e) Seismic Category	(f) Codes and Standards Designator	(g) Principal Construction Code	(h) Q-List	(i) Safety Related	(j) Environmental Designator	(k) Comments
12. Condensate piping and valves between recycle evaporator package and reactor makeup water storage tank inlet check valve 002		W,B	D	4	2	4	B31.1	N	N		
13. Piping and valves between recycle evaporator feed demineralizers and recycle holdup tanks		W,B	D	4	1	4	B31.1	N	N		au
14. Letdown piping and valves from valve LV-0112A to recycle evaporator feed demineralizers		W,B	D	4	1	4	B31.1	N	N		
15. Piping and valves from recycle evaporator to boric acid storage tank inlet valve 273		B	D	4	2	4	B31.1	N	N		au
16. Recycle holdup tank vent eductor		W	C	3	1	3	III-3	Y	Y		
17. Valve operators		W	NA	6	1	E	NEMA MG1	N	N		
18. Instrumentation		W	NA	6	2	J	mfg	N	N		Note s
CONTAINMENT ISOLATION SYSTEM											
1. Valves and piping		W,B	B	2	1	2	III-2	Y	Y		
2. Valve operators		W,B	NA	1	1	E	NEMA MG1	Y	Y	VIII	

TABLE 3.2.2-1 (SHEET 15 OF 99)

Principal System and Components	(a) Location Unit 1	Unit 2	(b) Source of Supply	(c) Quality Group	(d) VEGP Safety Class	(e) Seismic Category	(f) Codes and Standards Designator	(g) Principal Construction Code	(h) Q-List	(i) Safety Related	(j) Environmental Designator	(k) Comments
17. Containment spray pump motor coolers	AB-D76 & D77	AB-D04 & D05	W	C	3	1	3	III-3	Y	Y	VIII	
18. Safety injection pump motor coolers	AB-215 & B19	AB-B117 & B119	W	C	3	1	3	III-3	Y	Y	VIII	
19. RHR pump motor coolers	AB-D48 & D49	AB-D21 & D22	W	C	3	1	3	III-3	Y	Y	VIII	
20. CCW pump motor coolers	AB-A03 & A05	AB-A96 & A98	B	C	3	1	3	III-3	Y	Y	VIII,B4	
21. Centrifugal charging pump motor coolers	AB-C115 & C118	AB-C16 & C17	W	C	3	1	3	III-3	Y	Y	VIII	
22. Containment air coolers (tube side)	C-238′	C-238′	B	B	2	1	2	III-2	Y	Y	1-B	
23. NSCW pump motor coolers	NSW	NSW	B	NA	0	1	5	mfg	Y	Y	VI	
24. NSCW tower basin transfer line (buried pipe)			B	C	3	1	3	III-3	Y	Y		
COMPONENT COOLING WATER SYSTEM												
1. CCW surge tanks	AB-213 & 214	AB-201 &202	B	C	3	1	3	III-3	Y	Y	VIII	
2. CCW pumps	AB-A03 & A05	AB-A96 & A98	B	C	3	1	3	III-3	Y	Y	VIII,B4	
3. CCW HXs	AB-213 & 214	AB-201 & 202	B	C	3	1	3	III-3, TEMA-R	Y	Y	VIII	
4. CCW pump motors	AB-A03 & A05	AB-A96 & A98	B	NA	1	1	E	NEMA MG1	Y	Y	VIII,B4	
5. CCW chemical addition tanks	AB-A03 & A05	AB-A96 & A98	B	D	4	2	4	VIII	N	N		
6. Chemical addition tank valves and piping			B	D	4	2	4	B31.1	N	N		
7. Other process valves and piping			B	C	3	1	3	III-3	Y	Y	VIII	

TABLE 3.2.2-1 (SHEET 19 OF 99)

Principal System and Components	(a) Location Unit 1	Unit 2	(b) Source of Supply	(c) Quality Group	(d) VEGP Safety Class	(e) Seismic Category	(f) Codes and Standards Designator	(g) Principal Construction Code	(h) Q-List	(i) Safety Related	(j) Environmental Designator	(k) Comments
4. Waste evaporator feed backflushable filter housing	AB-B	AB-B	B	D	4	1	7	III-3	N	N		Note an
5. Deleted												
6. Deleted												
7. Deleted												
8. Deleted												
9. Waste evaporator reagent tank	AB-C63	AB-C40	W	D	4	2	4	VIII	N	N		av
10. Waste evaporator condensate demineralizer	AB-C146	AB-C149	W	D	4	2	7	III-3	N	N		
11. Waste evaporator condensate filter	AB-D91	AB-D86	W	D	4	2	7	III-3	N	N		
12. Waste evaporator condensate pump	AB-D64	AB-D12	W	D	4	2	7	III-3	N	N		
13. Waste evaporator condensate pump motor	AB-D64	AB-D12	W	NA	6	2	E	NEMA MG1	N	N		
14. Waste evaporator condensate tank	AB-C80	AB-C33	W	D	4	2	7	III-3	N	N		
15. Chemical drain tank	AB-D45	shared	W	D	4	2	7	VIII	N	N		
16. Chemical drain tank pump	AB-D47	shared	W	D	4	2	7	VIII	N	N		
17. Chemical drain tank pump motor	AB-D47	shared	W	NA	6	2	E	NEMA MG1	N	N		
18. Spent resin storage tank	AB-D36	AB-D37	W	D	4	1	7	III-3	N	N		

TABLE 3.2.2-1 (SHEET 20 OF 99)

Principal System and Components	(a) Location Unit 1	Unit 2	(b) Source of Supply	(c) Quality Group	(d) VEGP Safety Class	(e) Seismic Category	(f) Codes and Standards Designator	(g) Principal Construction Code	(h) Q-List	(i) Safety Related	(j) Environmental Designator	(k) Comments
19. Spent resin sluice pump	AB-D39	AB-D40	W	D	4	1	7	mfg	N	N		
20. Spent resin sluice pump motor	AB-D39	AB-D40	W	NA	6	2	E	NEMA MG1	N	N		
21. Sample vessels	AB-C63	AB-C40	B	D	4	2	7	VIII	N	N		
22. Solidification strainer			W	D	4	2	7	B 31.1	N	N		
23. Spent resin sluice back-flushable filter housing	AB-B	AB-B	B	D	4	1	7	III-3	N	N		
24. Floor drain tank	AB-D46	AB-D24	W	D	4	2	7	III-3	N	N		
25. Floor drain tank pump	AB-D50	AB-D29	S	D	4	2	7	mfg	N	N		
	AB-D50		S	D	4	2	7	mfg	N	N		
26. Floor drain tank pump motor	AB-D50	AB-D29	W	NA	6	2	E	NEMA MG1	N	N		
27. Floor drain tank strainer	AB-D	AB-D	W	D	4	2	7	mfg	N	N		
28. Floor drain tank back-flushable filter housing	AB-B	AB-B	B	D	4	2	7	III-3	N	N		
29. Waste monitor tank	AB-C81 & C82	AB-C34 & C35	W	D	4	2	7	III-3	N	N		
30. Waste monitor tank pump	AB-D58 & D59	AB-D17 & D18	W	D	4	2	7	III-3	N	N		
31. Waste monitor tank pump motor	AB-D58 & D59	AB-D17 & D18	W	NA	6	2	E	NEMA MG1	N	N		
32. Waste monitor tank back-flushable filter housing	AB-B	AB-B	B	D	4	2	7	III-3	N	N		
33. Waste monitor tank demineralizer	AB-C143	AB-C139	W	D	4	2	7	III-3	N	N		
33a. Auxiliary waste monitor tank	N/A	AB-D08	B	D	4	2	7	API-650	N	N		
33b. Auxiliary waste monitor tank pump	N/A	AB-D109	B	D	4	2	7	mfg	N	N		

TABLE 3.2.2-1 (SHEET 21 OF 99)

Principal System and Components	(a) Location Unit 1	Unit 2	(b) Source of Supply	(c) Quality Group	(d) VEGP Safety Class	(e) Seismic Category	(f) Codes and Standards Designator	(g) Principal Construction Code	(h) Q-List	(i) Safety Related	(j) Environmental Designator	(k) Comments
33c. Auxiliary waste monitor tank pump motor	N/A	AB-D109	B	N/A	6	2	E	mfg	N	N		
34. Laundry and hot shower tank	AB-D25	shared	W	D	4	2	7	VIII	N	N		
35. Laundry and hot shower tank pump	AB-D26	shared	W	D	4	2	7	mfg	N	N		
36. Laundry and hot shower tank pump motor	AB-D26	shared	W	NA	6	2	E	NEMA MG1	N	N		
37. Laundry and hot shower tank strainer	AB-D26	shared	W	D	4	2	7	B31.1	N	N		
38. Laundry and hot shower tank filter	AB-D88	shared	W	D	4	2	7	B31.1	N	N		Note ao
39. Reactor coolant drain tank	C-171′	C-171′	W	D	4	2	7	III-3	N	N		
40. Reactor coolant drain tank pump	C-171′	C-171′	W	D	4	2	7	III-3	N	N		
41. Reactor coolant drain tank pump motor	C-171′	C-171′	W	NA	6	2	E	NEMA MG1	N	N		
42. Reactor coolant drain tank HX:			W									
Tube side	C-171′	C-171′		D	4	2	7	III-3, TEMA-R	N	N		
Shell side, ACCW	C-171′	C-171′		D	4	1	5	III-2, TEMA-R	N	N		Note t
43. Piping and valves from waste evaporator and evaporator condensate demineralizer through evaporator condensate pump discharge valve 119			B	D	4	2	7	B31.1	N	N		av

TABLE 3.2.2-1 (SHEET 46 OF 99)

Principal System and Components	(a) Location Unit 1	Unit 2	(b) Source of Supply	(c) Quality Group	(d) VEGP Safety Class	(e) Seismic Category	(f) Codes and Standards Designator	(g) Principal Construction Code	(h) Q-List	(i) Safety Related	(j) Environmental Designator	(k) Comments
6. Valves and piping			S	D	4	2	4	B31.1	N	N		
7. Instrumentation			S	NA	6	2	J	mfg	N	N		
TURBINE GENERATOR CO_2 SYSTEM												
1. All mechanical components	TB-220′	TB-220′	S	D	4	2	4	mfg	N	N		
TURBINE PLANT CLOSED COOLING WATER SYSTEM												
1. Closed cooling HXs	TB-195′	TB-195′	S	NA	6	2	6	VIII	N	N		
2. Closed cooling circulating pumps	TB-195′	TB-195′	S	NA	6	2	6	mfg	N	N		
3. Closed cooling water makeup surge tank	TB-270′	TB-270′	S	NA	6	2	6	VIII	N	N		Note ac
4. Closed cooling water drain tank	TB-195′	TB-195′	S	NA	6	2	6	VIII	N	N		Note ac
5. Closed cooling water booster pump	TB-195′	TB-195′	S	NA	6	2	6	mfg	N	N		
6. Pump motors	TB-195′	TB-195′	S	NA	6	2	E	NEMA MG1	N	N		
7. Piping and valves			S	NA	6	2	6	B31.1	N	N		
8. Chemical addition pot	TB	TB	S	NA	6	2	6	mfg	N	N		
9. Instrumentation			S	NA	6	2	J	mfg	N	N		
TURBINE PLANT COOLING WATER SYSTEM												
1. Turbine plant cooling water pumps	VB	VB	S	D	4	2	4	mfg	N	N		
2. Turbine plant cooling water pump motors	VB	VB	S	NA	6	2	E	NEMA MG1	N	N		
3. Piping and valves			S,B	NA	6	2	6	mfg	N	N		
4. Instrumentation			S	NA	6	2	J	mfg	N	N		

TABLE 3.2.2-1 (SHEET 47 OF 99)

Principal System and Components	(a) Location Unit 1	Unit 2	(b) Source of Supply	(c) Quality Group	(d) VEGP Safety Class	(e) Seismic Category	(f) Codes and Standards Designator	(g) Principal Construction Code	(h) Q-List	(i) Safety Related	(j) Environmental Designator	(k) Comments
WASTE EVAPORATOR STEAM SUPPLY SYSTEM												
1. Electric boiler feed-water pumps	AB-D52	shared	B	D	4	2	4	mfg	N	N		av
2. Electric boiler conden-sate receiver tank	AB-D52	shared	B	D	4	2	4	API 650	N	N		av

TABLE 3.2.2-1 (SHEET 48 OF 99)

Principal System and Components	(a) Location Unit 1	Unit 2	(b) Source of Supply	(c) Quality Group	(d) VEGP Safety Class	(e) Seismic Category	(f) Codes and Standards Designator	(g) Principal Construction Code	(h) Q-List	(i) Safety Related	(j) Environmental Designator	(k) Comments
3. Steam isolation valves		shared										av
4. Steam isolation piping		shared										av
5. Manual valve upstream of steam isolation valves		shared										av
WASTE WATER EFFLUENT SYSTEM												
1. Waste water retention basin transfer pumps	O	shared	S	NA	6	2	6	mfg	N	N		
2. Waste water retention basin transfer pump motors	O	shared	S	NA	6	2	E	NEMA MG1	N	N		
3. Low voltage transformer area sump pump	O	shared	S	NA	6	2	6	mfg	N	N		
4. Low voltage transformer area sump pump motor	O	shared	S	NA	6	2	E	NEMA MG1	N	N		
5. Firewater pump-house oily waste separator pumps	O	shared	S	NA	6	2	6	mfg	N	N		
6. Firewater pump-house oily waste separator pump motors	O	shared	S	NA	6	2	E	NEMA MG1	N	N		
7. Auxiliary boiler room sump pumps	VB	shared	S	NA	6	2	6	mfg	N	N		

TABLE 3.2.2-1 (SHEET 57 OF 99)

Principal System and Components	(a) Location Unit 1	Unit 2	(b) Source of Supply	(c) Quality Group	(d) VEGP Safety Class	(e) Seismic Category	(f) Codes and Standards Designator	(g) Principal Construction Code	(h) Q-List	(i) Safety Related	(j) Environmental Designator	(k) Comments
4. H_2 recombiners	C-261′	C-261′	W	NA	0	1	5	III-2	Y	Y		Note m
5. Safety-related recombiner instrumentation			W,B	NA	1	1	J	mfg		Y	Y	Note s
6. Safety-related valve operators			B	NA	1	1	E	NEMA MG1	Y	Y		
7. All other instrumentation			W,G	NA	6	1	J	mfg	N	N		
CONTAINMENT AUXILIARY AIR COOLING SYSTEM												Note ah
1. Fans	C-261′	C-261′	B	NA	6	1	6	AMCA	N	N		
2. Fan motors	C-261′	C-261′	B	NA	6	1	E	NEMA MG1	N	N		
3. Cooling coils	C-261′	C-261′	B	B	2	1	2	III-2	Y	Y	1-A	
4. Instrumentation			B	NA	6	2	J	mfg	N	N		
CONTAINMENT POST-LOCA CAVITY PURGE SYSTEM												Note ah
1. Fans	C-199′	C-199′	B	NA	0	1	5	AMCA	Y	Y	1-A	
2. Fan motors	C-199′	C-199′	B	NA	1	1	E	NEMA MG1	Y	Y	1-A	
3. Ductwork and backdraft damper			B	NA	0	1	5	ANSI N509	Y	Y		
4. Embedded ductwork			B	NA	0	1	5	B31.1	Y	Y		
5. Safety-related instrumentation			B	NA	1	1	J	mfg	Y	Y		Note s
EQUIPMENT BUILDING HVAC SYSTEM												Note ah
1. Equipment building ventilation fans	EB-236′	EB-236′	B	NA	6	2	6	AMCA	N	N		
2. Equipment building ventilation fan motors	EB-236′	EB-236′	B	NA	6	2	E	NEMA MG1	N	N		
3. Tendon gallery ventilation fans	EB-177′	EB-177′	B	NA	6	2	6	AMCA	N	N		
4. Tendon gallery ventilation fan motors	EB-177′	EB-177′	B	NA	6	2	E	NEMA MG1	N	N		
5. Ductwork			B	NA	6	2	6	ANSI N509	N	N		
6. Dampers			B	NA	6	2	6	ANSI N509	N	N		
7. Damper motors			B	NA	6	2	E	NEMA MG1	N	N		
8. Instrumentation			B	NA	6	2	J	mfg	N	N		

TABLE 3.2.2-1 (SHEET 63 OF 99)

Principal System and Components	(a) Location Unit 1	Unit 2	(b) Source of Supply	(c) Quality Group	(d) VEGP Safety Class	(e) Seismic Category	(f) Codes and Standards Designator	(g) Principal Construction Code	(h) Q-List	(i) Safety Related	(j) Environmental Designator	(k) Comments
4. Auxiliary relay room ESF A/C fan motors	CB-226	CB-223	B	NA	1	1	E	NEMA MG1	Y	Y	IX	
5. Prefilters	CB-A32 CB-325′	shared	B	NA	6	2	6	ASHRAE	N	N		
6. Auxiliary relay room ESF A/C (cooling coils)	CB-200′ CB-240′	CB-200′ CB-240′	B	C	3	1	3	III-3	Y	Y	IX	
(ductwork)			B	NA	0	1	5	mfg	Y	Y		
fan coolers												
7. All other coolers	CB-A32 CB-325′	shared	B	NA	6	2	6	ARI	N	N		
8. Electric duct heaters			B	NA	6	2	E	UL	N	N		
9. All other ductwork			B	NA	6	2	6	SMACNA	N	N		
10. Auxiliary relay room ductwork and dampers			B	NA	0	1	5	ANSI N509	Y	Y		
11. Smoke exhaust fan	CB-325	shared	B	NA	6	2	6	AMCA	N	N		
12. Smoke exhaust fan motor	CB-325	shared	B	NA	6	2	E	NEMA MG1	N	N		
13. Computer room A/C fans	CB-A38	CB-A30	G	NA	6	2	6	AMCA	N	N		
14. Computer room A/C fan motors	CB-A38	CB-A30	G	NA	6	2	E	NEMA MG1	N	N		
15. Computer room A/C unit humidifier	CB-A38	CB-A30	G	NA	6	2	E	ANSI N509	N	N		
16. Computer room A/C unit cooling coils	CB-A38	CB-A30	G	NA	6	2	6	ARI	N	N		
17. Auxiliary relay room ESF A/C instrumentation			B	NA	1	1	J	mfg	Y	Y		Note s
18. All other instrumentation			B	NA	6	2	J	mfg	N	N		
19. Normal AC room ESF AC vent	CB-325	CB-325	B	NA	0	1	5		Y	Y		
Normal chilled water cooling coil	CB-325	-	B	NA	6	2	6	ARI	N	N		
ESF chilled water cooling coils	CB-325	CB-325	B	C	3	1	3	III-3	Y	Y		

REV 9 5/00
REV 7 9/97
REV 6 4/97
REV 5 9/95

TABLE 3.2.2-1 (SHEET 68 OF 99)

Principal System and Components	(a) Location Unit 1	Unit 2	(b) Source of Supply	(c) Quality Group	(d) VEGP Safety Class	(e) Seismic Category	(f) Codes and Standards Designator	(g) Principal Construction Code	(h) Q-List	(i) Safety Related	(j) Environmental Designator	(k) Comments
AUXILIARY BUILDING ESF ROOM COOLERS												Note ah
1. Electrical, switchgear, and MCC room cooler A, level D:												
Fan	AB-D79	AB-D02	B	NA	0	1	5	AMCA	Y	Y	VIII	
Fan motor	AB-D79	AB-D02	B	NA	1	1	E	NEMA MG1	Y	Y	VIII	
Normal chilled water cooling coils	AB-D79	AB-D02	B	C	3	1	3	III-3	Y	Y	VIII	
ESF chilled water cooling coils	AB-D79	AB-D02	B	C	3	1	3	III-3	Y	Y	VIII	
Ductwork			B	NA	0	1	5	ANSI N509	Y	Y		
2. Electrical, switchgear, and MCC room cooler B, level 2:												
Fan	AB-212	AB-221	B	NA	0	1	5	AMCA	Y	Y	VIII	
Fan motor	AB-212	AB-221	B	NA	1	1	E	NEMA MG1	Y	Y	VIII	
Normal chilled water cooling coils	AB-212	AB-221	B	C	3	1	3	III-3	Y	Y	VIII	
ESF chilled water cooling coils	AB-212	AB-221	B	C	3	1	3	III-3	Y	Y	VIII	
Ductwork			B	NA	0	1	5	ANSI N509	Y	Y		
3. Electrical, switchgear, and MCC room cooler A, level C:												
Fan	AB-B13	AB-B123	B	NA	0	1	5	AMCA	Y	Y	VIII	
Fan motor	AB-B13	AB-B123	B	NA	1	1	E	NEMA MG1	Y	Y	VIII	
Normal chilled water cooling coils	AB-B13	AB-B123	B	C	3	1	3	III-3	Y	Y	VIII	
ESF chilled water cooling coils	AB-B13	AB-B123	B	C	3	1	3	III-3	Y	Y	VIII	
Ductwork			B	NA	0	1	5	ANSI N509	Y	Y		
4. Electrical, switchgear, and MCC room cooler B, level B:												
Fan	AB-B16	AB-B122	B	NA	0	1	5	AMCA	Y	Y	VIII	
Fan motor	AB-B16	AB-B122	B	NA	1	1	E	NEMA MG1	Y	Y	VIII	

TABLE 3.2.2-1 (SHEET 72 OF 99)

Principal System and Components	(a) Location Unit 1	Unit 2	(b) Source of Supply	(c) Quality Group	(d) VEGP Safety Class	(e) Seismic Category	(f) Codes and Standards Designator	(g) Principal Construction Code	(h) Q-List	(i) Safety Related	(j) Environmental Designator	(k) Comments
18. SFP pump and HX room cooler B:												
Fan	FB-A07	FB-A04	B	NA	0	1	5	AMCA	Y	Y	VIII	
Fan motor	FB-A07	FB-A04	B	NA	1	1	E	NEMA MG1	Y	Y	VIII	
Normal chilled water cooling coils	FB-A07	FB-A04	B	C	3	1	3	III-3	Y	Y	VIII	
ESF chilled water cooling coils	FB-A07	FB-A04	B	C	3	1	3	III-3	Y	Y	VIII	
19. Safety-related instrumentation			B	NA	1	1	J	mfg	Y	Y		Note s
PIPING PENETRATION AND MSIV VENTILATION SYSTEM												Note ah
1. Restraint cooling fans	VB	VB	B	NA	6	2	6	AMCA	N	N		
2. Restraint cooling fan motors	VB	VB	B	NA	6	2	E	NEMA MG1	N	N		Note m
3. Restraint cooling ductwork			B	NA	6	2	6	SMACNA	N	N		
4. Restraint cooling backdraft dampers			B	NA	6	2	6	ANSI N509	N	N		
5. Restraint cooling instrumentation			B	NA	6	2	J	mfg	N	N		
6. MSIV AHU fans	VB	VB	S	NA	6	2	6	AMCA	N	N		
7. MSIV AHU fan motors	VB	VB	S	NA	6	2	E	NEMA MG1	N	N		
8. MSIV ductwork			S	NA	6	2	6	SMACNA	N	N		
9. MSIV instrumentation		S	NA	6	2	J	mfg	N	N			
10. MSIV ventilation instrumentation			S	NA	6	2	J	mfg	N	N		
PIPING PENETRATION FILTER EXHAUST SYSTEM												Note ah
1. Fans	AB-209 & 220	AB-219 & 220	B	NA	0	1	5	AMCA	Y	Y	VIII	
2. Fan motors	AB-209 & 220	AB-219 & 220	B	NA	1	1	E	NEMA MG1	Y	Y	VIII	
3. Moisture eliminators	AB-209 & 220	AB-219 & 220	B	NA	0	1	5	ANSI N509	Y	Y	VIII	
4. Electrical heaters	AB-209 & 220	AB-219 & 220	B	NA	1	1	E	UL, ANSI N509	Y	Y	VIII	

TABLE 3.2.2-1 (SHEET 75 OF 99)

Principal System and Components	(a) Location Unit 1	Unit 2	(b) Source of Supply	(c) Quality Group	(d) VEGP Safety Class	(e) Seismic Category	(f) Codes and Standards Designator	(g) Principal Construction Code	(h) Q-List	(i) Safety Related	(j) Environmental Designator	(k) Comments
12. Switchgear room level 2 A/C fan motor	TB-245′	TB-245′	S	NA	6	2	E	NEMA MG1	N	N		
13. Stairwell exhaust fans	TB-270′	TB-270′	S	NA	6	2	6	AMCA	N	N		
14. Stairwell exhaust fan motors	TB-270′	TB-270′	S	NA	6	2	E	NEMA MG1	N	N		
15. Turbine building exhaust fans	TB-270′	TB-270′	S	NA	6	2	6	AMCA	N	N		
16. Turbine building exhaust fan motors	TB-270′	TB-270′	S	NA	6	2	E	NEMA MG1	N	N		
17. Prefilters	TB	TB	S	NA	6	2	6	ASHRAE	N	N		
18. Cooling coils	TB	TB	S	NA	6	2	6	ARI	N	N		
19. Heaters	TB	TB	S	NA	6	2	E	UL	N	N		
20. Heater fans	TB	TB	S	NA	6	2	6	AMCA	N	N		
21. Ductwork and dampers			S	NA	6	2	6	SMACNA	N	N		
22. Damper motors			S	NA	6	2	E	NEMA MG1	N	N		
23. Instrumentation			S	NA	6	2	J	mfg	N	N		
24. Battery room exhaust fans	TB-220′	TB-220′	S	NA	6	2	6	AMCA	N	N		
25. Battery room exhaust fan motors	TB-220′	TB-220′	S	NA	6	2	E	NEMA MG1	N	N		
TECHNICAL SUPPORT CENTER HVAC SYSTEM												Note ah
1. TSC filter fan	TSC	shared	B	NA	6	2	6	AMCA	N	N		
2. TSC filter fan motor	TSC	shared	B	NA	6	2	E	NEMA MG1	N	N		
3. HEPA filters	TSC	shared	B	NA	6	2	6	ANSI N509	N	N		
4. Charcoal filter	TSC	shared	B	NA	6	2	6	ANSI N509	N	N		
5. Prefilter	TSC	shared	B	NA	6	2	6	ASHRAE	N	N		
6. Filter unit heater	TSC	shared	B	NA	6	2	E	UL	N	N		
7. TSC A/C fan	TSC	shared	B	NA	6	2	6	AMCA	N	N		
8. TSC A/C fan motor	TSC	shared	B	NA	6	2	E	NEMA MG1	N	N		
9. Moisture eliminator	TSC	shared	B	NA	6	2	6	ANSI N509	N	N		
10. TSC toilet exhaust fan	TSC	shared	B	NA	6	2	6	AMCA	N	N		

TABLE 3.2.2-1 (SHEET 78 OF 99)

Principal System and Components	(a) Location Unit 1	Unit 2	(b) Source of Supply	(c) Quality Group	(d) VEGP Safety Class	(e) Seismic Category	(f) Codes and Standards Designator	(g) Principal Construction Code	(h) Q-List	(i) Safety Related	(j) Environmental Designator	(k) Comments
11. CAS chilled water chemical feed pot			B	D	4	2	4	VIII	N	N		
12. CAS chillers			B	NA	6	2	6	VIII	N	N		
13. Piping and valves			B	D	4	2	4	B31.1	N	N		
14. Instrumentation			B	NA	6	2	J	mfg	N	N		
AUXILIARY FEEDWATER PUMPHOUSE HVAC SYSTEM												Note ah
1. ESF supply fan	AFP	AFP	B	NA	0	1	5	AMCA	Y	Y	VI	
2. ESF supply fan motors	AFP	AFP	B	NA	1	1	E	NEMA MG1	Y	Y	VI	
3. Non-ESF supply fan	AFP	AFP	B	NA	6	2	6	AMCA	N	N		
4. Non-ESF supply fan motor	AFP	AFP	B	NA	6	2	E	NEMA MG1	N	N		
5. Building unit heaters	AFP	AFP	B	NA	6	2	E	UL	N	N		
6. ESF Dampers			B	NA	0	1	5	ANSI N509	Y	Y		
7. ESF instrumentation			B	NA	1	1	J	mfg	Y	Y		Note s
8. Non-ESF instrumentation			B	NA	6	2	J	mfg	N	N		
MISCELLANEOUS HVAC SYSTEMS												Note ah
1. Mechanical components	VB	VB	B	NA	6	2	6	mfg	N	N		
2. Electrical equipment	VB	VB	B	NA	6	2	E	NEMA MG1	N	N		
3. Instrumentation			B	NA	6	2	J	mfg	N	N		
MAIN CONTROL BOARD												Notes l, p and s
1. PAMS instrumentation			W	NA	1	1	J	mfg	Y	Y		
2. Hand switches and controls for safety-related equipment			W	NA	1	1	J	mfg	Y	Y		
3. All other instruments and controls			W	NA	6	1	J	mfg	N	N		

TABLE 3.2.2-1 (SHEET 79 OF 99)

Principal System and Components	(a) Location Unit 1 Unit 2	(b) Source of Supply	(c) Quality Group	(d) VEGP Safety Class	(e) Seismic Category	(f) Codes and Standards Designator	(g) Principal Construction Code	(h) Q-List	(i) Safety Related	(j) Environmental Designator	(k) Comments
NUCLEAR INSTRUMENTATION SYSTEM											
1. All instruments inputting to reactor protection system		W	NA	1	1	J	mfg	Y	Y		
PROCESS CONTROL SYSTEM											
1. NSSS BOP safety-related instrumentation and controls		W,B	NA	1	1	J	mfg	Y	Y		
2. NSSS BOP nonsafety related instrumentation and controls		W,B	NA	6	1	J	mfg	N	N		
PROTECTION SYSTEM NSS											
1. Protection instrumentation and controls		W	NA	1	1	J	mfg	Y	Y		Note s
ROD CONTROL POWER SYSTEM											
1. Reactor trip switchgear		W	NA	1	1	E	mfg	Y	Y		
2. Other switchgear		W	NA	6	2	E	mfg	N	N		
FULL LENGTH ROD CONTROL SYSTEM											
1. Rod control equipment		W	NA	6	1	J	mfg	N	N		
ROD POSITION INDICATION SYSTEM											
1. Rod position instrumentation		W	NA	6	1	J	mfg	N	N		

TABLE 3.2.2-1 (SHEET 81 OF 99)

Principal System and Components	(a) Location Unit 1	Unit 2	(b) Source of Supply	(c) Quality Group	(d) VEGP Safety Class	(e) Seismic Category	(f) Codes and Standards Designator	(g) Principal Construction Code	(h) Q-List	(i) Safety Related	(j) Environmental Designator	(k) Comments
SAFETY-RELATED SYSTEMS BYPASS/INOPERABLE STATUS AND TRIP/MONITORING INDICATING LIGHTS												
1. Trip monitoring lights			W	NA	6	1	J	mfg	N	N		
2. All other portions			W,B	NA	1	1	J	mfg	Y	Y		
INCORE INSTRUMENTATION												
1. All portions			W	NA	6	1	J	mfg	N	N		
TURBINE PROTECTION SYSTEM												
1. All portions			S	NA	6	2	J	mfg	N	N		
TURBINE SUPERVISORY INSTRUMENTATION												
1. All portions			S	NA	6	2	J	mfg	N	N		
ELECTROHYDRAULIC CONTROL SYSTEM												
1. EHC panel			S	NA	6	2	J	mfg	N	N		
2. All other I & C portions			S	NA	6	2	J	mfg	N	N		
3. Hydraulic fluid power units	TB-220′	TB-220′	S	NA	6	2	6	mfg	N	N		
4. Control coolers	TB-220′	TB-220′	S	NA	6	2	6	mfg	N	N		
5. Piping & valves			S	NA	6	2	6	B31.1	N	N		
AMSAC												
1. Nonsafety-related portion			W	NA	6	1	J	mfg	N	N		
2. Safety-related portion		W	NA	1	1	J	mfg	Y	Y			
COMPUTER SYSTEM												
1. All portions			S	NA	6	2	J	mfg	N	N		
ANNUNCIATOR SYSTEM												
1. All portions			W	NA	6	1	J	mfg	N	N		
TELEPHONE PAGE SYSTEM												
1. All portions			B	NA	6	2	E	mfg	N	N		

TABLE 3.2.2-1 (SHEET 82 OF 99)

Principal System and Components	(a) Location Unit 1	Unit 2	(b) Source of Supply	(c) Quality Group	(d) VEGP Safety Class	(e) Seismic Category	(f) Codes and Standards Designator	(g) Principal Construction Code	(h) Q-List	(i) Safety Related	(j) Environmental Designator	(k) Comments
PABX SYSTEM												
1. All portions			G	NA	6	2	E	mfg	N	N		
SOUND-POWERED SYSTEM												
1. Maintenance and refueling			B	NA	6	2	E	mfg	N	N		
2. Shutdown			B	NA	6	2	E	mfg	N	N		Note v
SEISMIC MONITORING EQUIPMENT												
1. "Free Field" accelerograph near river intake structure			B	NA	6	2	J	mfg	N	N		Note al
2. All other portions			B	NA	6	1	J	mfg	N	N		
PLANT SECURITY SYSTEM												
1. Fencing			B	NA	6	2	6	mfg	N	N		
2. Instrumentation			B	NA	6	2	J	mfg	N	N		
3. Electrical equipment			B	NA	6	2	E	mfg	N	N		Note n
OFFSITE POWER SYSTEM												
1. All portions			S	NA	6	2	E	mfg	N	N		
ac SYSTEM - 480 V (Class 1E portion)												
1. 4160/480 V transformers			B	NA	1	1	E	mfg	Y	Y		
2. Load centers			B	NA	1	1	E	mfg	Y	Y		
3. Motor control centers			B	NA	1	1	E	mfg	Y	Y		
4. Instrumentation and control			B	NA	1	1	E	mfg	Y	Y		
ac SYSTEM, 480 V (Non-class 1E portions)												
1. 4160/480V transformers			B	NA	6	2	E	mfg	N	N		
2. Load centers			B	NA	6	2	E	mfg	N	N		
3. Motor control centers		B	NA	6	2	E	mfg	N	N			
4. Instrumentation & control			B	NA	6	2	E	mfg	N	N		

TABLE 3.2.2-1 (SHEET 84 OF 99)

Principal System and Components	(a) Location Unit 1 Unit 2	(b) Source of Supply	(c) Quality Group	(d) VEGP Safety Class	(e) Seismic Category	(f) Codes and Standards Designator	(g) Principal Construction Code	(h) Q-List	(i) Safety Related	(j) Environmental Designator	(k) Comments
2. Other emergency lighting		B	NA	6	2	E	mfg	N	N		Note v
3. Essential lighting		B	NA	6	2	E	mfg	N	N		
4. Other lighting		B	NA	6	2	E	mfg	N	N		
5. Lighting isolation transformers		B	NA	1	1	E	mfg	Y	Y		
CABLE SYSTEM											
1. Safety-related power, control, and instrument cables		B	NA	1	2	E	mfg	Y	Y		
2. Nonsafety-related portions		B	NA	6	2	E	mfg	N	N		
FIRE DETECTION SYSTEM											Note v
1. Detector and alarm panels		B	NA	6	2	E	mfg	N	N		
2. Signaling systems		B	NA	6	2	E	mfg	N	N		
3. Local zone indicating panel		B	NA	6	2	E	mfg	N	N		
4. Local display cabinets		B	NA	6	2	E	mfg	N	N		
HEAT TRACING SYSTEMS											
1. Boric acid injection heat tracing, sensors and controls		B	NA	6	2	E	mfg	N	N		
2. Other heat tracing, sensors, and controls		B,S	NA	6	2	E	mfg	N	N		
ELECTRICAL PENETRATION SYSTEM											
1. Penetration assemblies		B	NA	1	1	E	IEEE-317, III-MC	Y	Y		

TABLE 3.2.2-1 (SHEET 88 OF 99)

Principal System and Components	(a) Location Unit 1	Unit 2	(b) Source of Supply	(c) Quality Group	(d) VEGP Safety Class	(e) Seismic Category	(f) Codes and Standards Designator	(g) Principal Construction Code	(h) Q-List	(i) Safety Related	(j) Environmental Designator	(k) Comments
34. Radwaste transfer building			B	NA	6	2	C	AISC-69 ACI 318-71, UBC-76	N	N		
35. Category 1 electrical cable tray and conduit supports			B	NA	0	1	C	AISC-69, AISI-68	Y	Y		Note 2
36. Category 1 HVAC duct supports			B	NA	0	1	C	AISC-69	Y	Y		Note 2
37. Category 1 pipe supports			B		See Note 4			AISC-69 III-NF	Y	Y		Note 2
38. Pipe whip restraints			W,B	NA	0	1	C	AISC-69	Y	Y		
39. Water tight doors and seals			B	NA	0	1	C	mfg	Y	Y		
40. Waterproofing and water stops			B	NA	6	2	C	mfg	N	N		
41. Category 1 backfill			B	NA	0	1	C	See DC-1000-C	Y	Y		
42. Category 1 tank liner plate	O	O	B	NA	0	1	C	AISC-69	Y	Y		
43. Underground Category 1 conduits			B	NA	0	1	C	AISC-69,	Y	Y		
44. Alternate radwaste building, control room and dress out area	shared		B	NA	6	2	C	UBC-76 AISC-69 ACI-318-71	N	N		
45. Fire dampers	VB	VB	B	NA	6	1,2	6	mfg	N	N		Note v
46. Fire doors	VB	VB	B	NA	6	2	C	mfg	N	N		Note v
47. Fire rated penetration seals	VB	VB	B	NA	6	2	C	mfg	N	N		Note v
48. Structural steel fire proofing	VB	VB	B	NA	6	2	C	mfg	N	N		Note v
49. Radiant energy shields	C	C	B	NA	6	2	9	mfg	N	N		Note v
50. Electrical raceway fireproofing	VB	VB	B	NA	6	2	9	mfg	N	N		Note v
51. 3 hour plaster walls	VB	VB	B	NA	6	2	C	mfg	N	N		Note v

TABLE 3.2.2-1 (SHEET 90 OF 99)

Principal System and Components	(a) Location Unit 1	Unit 2	(b) Source of Supply	(c) Quality Group	(d) VEGP Safety Class	(e) Seismic Category	(f) Codes and Standards Designator	(g) Principal Construction Code	(h) Q-List	(i) Safety Related	(j) Environmental Designator	(k) Comments
9. Integrated head missile shield	C	C	W	NA	0	1	5	III-NF	Y	Y		
10. Integrated head operator support stand	C	C	W	NA	6	2	6	mfg	N	N		
11. Integrated head package stud support collars	C	C	W	NA	6	2	6	mfg	N	N		
12. Radial arm hoist assembly	C	C	W	NA	6	2	6	mfg	N	N		
13. Radial arm stud tensioner hoist	C		W(U1) S(U2)	NA	6	2	6	mfg	N	N		
14. Reactor internals lifting rig	C	C	W	NA	6	2	6	mfg	N	N		
15. Fuel handling machine	FB	FB	W	NA	0	1	5	mfg	Y	Y	VII	
16. Spent fuel handling tool	FB	FB	W	NA	0	1	5	mfg	Y	Y	VII	
17. New fuel handling tool	FB	FB	W	NA	6	2	6	mfg	N	N		
18. Fuel transfer tube			W	B	2	1	2	III-MC	Y	Y		
19. Fuel transfer system			W	NA	6	2	6	mfg	N	N		Note ab
20. New fuel elevator	FB	FB	W	NA	6	2	6	mfg	N	N		Note ab
21. Spent fuel cask bridge crane	FB	FB	B	NA	0	1	5	mfg	Y	Y		Note q
RACEWAY, RACEWAY ACCESSORIES, AND FITTINGS FOR												
1. Safety-related power, control, and instrument circuits, in seismic structures			B	NA	6	1	E	mfg	N	N		
2. Nonsafety-related circuits			B	NA	6	2	E	mfg	N	N		

TABLE 3.2.2-1 (SHEET 99 OF 99)

valve(s) may remain open if the P/D pump is out of service and the equipment drain isolation valves of the inservice CVCS centrifugal charging pump train(s) remain locked in the partially open or closed position. For these rooms during modes 5 and 6, the floor drain isolation valves may remain open if the P/D pump is out of service and the floor drain isolation valves of the inservice CVCS centrifugal charging pump train(s) remain locked closed. This will ensure a potential flood in the P/D pump room would not affect the inservice CVCS centrifugal charging pump train(s).

au. Recycle evaporator package is abandoned in place.

av. Abandoned in place.

aw. Waste evaporator is abandoned in place.

GENERAL NOTES

1. For systems under the Westinghouse scope of supply, all piping and all manual valves 2 in. and smaller are supplied by Bechtel, except for the reactor coolant loop piping, the pressurizer surge line, the pressurizer relief piping complex, reactor vessel bottom mounted instrument tubing, reactor vessel head vent piping to refueling disconnect flange, and reactor vessel seal leak detection leakoff appurtenance.

2. Hangers and supports for Seismic Category 1 systems and components are designed as Seismic Category 1. In general hangers and supports for Seismic Category 2 piping, cable tray, and ducting in Seismic Category 1 buildings are designed to maintain their structural integrity under the postulated earthquake conditions; however, exceptions to this requirement are permitted when it is demonstrated that their failure will not adversely affect adjacent Seismic Category 1 equipment or systems.

3. All "Q" listed coatings are assigned a project classification of 02C. Q listed coatings are not seismically qualified but will not fail in a manner that would compromise the function of safety-related equipment in the event of an earthquake since they are applied to Seismic Category 1 structures.

4. The safety class, seismic category, and codes and standards designators of hangers and supports of the Category 1 piping systems are the same as the piping system they support.

Missile selection is based on the following conditions:

A. All rotating components that are operated during normal operating plant conditions are considered to be potential missiles if the energy of the missile is sufficient to perforate the housing.

B. The energy in a rotating part associated with component failure is assumed to occur at 120-percent overspeed for turbine-driven components and at maximum operating speed for electrically-driven components.

C. Components within one train of a redundant system are not protected from potential rotating missiles originating from the same train. Components within the other train are protected by complete separation and compartmentalization.

3.5.1.1.2 Pressurized Component Failure Missiles

Based on the design features noted below and review of the plant areas outside the containment containing pressurized components, it is concluded that there are no pressurized components whose failure will result in postulated missiles affecting the safety-related systems, structures, and components required for safe shutdown of the reactor. The design features of the pressurized components and the basis for the missile selection are described below.

A. Pressurized components in systems which qualify as high-energy systems (as defined in section 3.6) are evaluated as to their potential for becoming missiles.

B. Temperature or other detectors installed in high-energy piping are evaluated as potential missiles if failure of a threaded connection would cause their ejection. Thermowells retained by circumferential, pressure-retaining welds are not considered credible missiles because of their conservative design and weld quality inspections.

C. Where auxiliary fittings such as thermocouple wells, pressure gages, vents, drains, and test connections are attached to piping or process equipment by threaded connections only, they are postulated as missiles. When such fittings are attached by welding and the completed joint has a greater design strength than the parent metal, they are not postulated as missiles.

D. Valves of American National Standards Institute (ANSI) rating 900 psig and above, constructed in accordance with Section III of the American Society of Mechanical Engineers (ASME) Boiler and Pressure Vessel (B&PV) Code, are primarily pressure seal, bonnet-type valves with the exception that certain small bore valves in this ANSI rating range may be the bolted-bonnet style. For pressure seal bonnet valves, valve bonnets are prevented from becoming missiles by the retaining ring, which would have to fail in shear, and by the yoke, which would capture the bonnet or reduce bonnet energy. Because of the highly conservative design of the retaining ring (safety factors in excess of eight may be used), bonnet ejection is highly improbable; hence, bonnets are not considered credible missiles for these valves.

E. Most valves of ANSI rating 600 psig and below are valves with bolted bonnets or pressure seal, bonnet-type valves. Valve bonnets are prevented from becoming missiles by limiting stresses in the bonnet-to-body bolting material by rules set forth in the ASME B&PV Code, Section III, and by designing flanges in accordance with applicable code requirements. Even if bolt failure were to occur, the likelihood of all bolts experiencing a simultaneous complete severance failure is very remote. The widespread use of valves with bolted bonnets and the low historical incidence of complete severance valve bonnet failures confirm that bolted valve bonnets need not be considered as credible missiles.[1]

F. Valve stems are not considered as potential missiles if at least one feature, in addition to the stem threads, is included in their design to prevent ejection. For example, valves with backseats are prevented from becoming missiles by this feature. In addition, air- or motor-operated valve stems are effectively restrained by the valve operators.

G. Nuts, bolts, nut and bolt combinations, and nut and stud combinations have only a small amount of stored energy and thus are not considered potential missiles.

H. Normally closed gate valves are not considered as potential missile sources, since the force of the fluid acts perpendicularly to the disc, stem, and operator.

I. Components within one train of a system containing redundant trains are not protected from potential

pressurized missiles originating from the same train due to complete separation and compartmentalization.

The conclusion, based on design features noted above, that valve bonnets are not credible missiles is also supported by industry experience.

It is necessary to consider the possible modes of rupture of valves to estimate the likelihood that, given a rupture, a missile would be ejected. As has been shown by Nuclear Plant Reliability Data System data and general industry experience, rupture is most likely to take the form of a through-wall crack, which would be detected as a leak long before it could propagate into a serious loss of fluid or missile-generating failure. To be a source of a significant missile, such a crack would have to occur in the bonnet area of a valve and would have to be a circumferential crack. With the above probability for any such rupture, it is not reasonably credible that such a particular crack could occur and remain undetected for a sufficient time to propagate into a missile-generating condition.

Stem ejection is a possible source of missiles, but because the stem is attached firmly to the valve internals as well as the driving and pressure-retaining mechanism in the majority of large valves, it is highly unlikely.

3.5.1.2 Internally Generated Missiles (Inside Containment)

The general sources and exclusions (see table 3.5.1-8) of postulated missiles outside the containment (paragraph 3.5.1.1) also apply to inside the containment. The results of the analysis of the effects of the missiles are given in tables 3.5.1-2 and 3.5.1-3. For the reactor coolant pressure boundary (RCPB), the selection of potential missiles is based on the application of single-failure criteria to the normal retention features of plant equipment for which there is a source of energy capable of creating a missile in the event of the postulated removal of the normal retention features. Where redundancy is provided by the normal retention features, such that sufficient retention capability remains to prevent creation of a missile in the event of a postulated failure of a single retention feature, no potential missile is postulated.

3.5.1.2.1 Control Rod Drive Mechanisms

Gross failure of a control rod drive mechanism (CRDM) housing sufficient to allow a control rod to be rapidly ejected from the core is not considered credible for the following reasons:

A. Control rod drive mechanisms are shop hydrotested at 4100 ±75 psi.

B. Control rod drive mechanism housings are individually hydrotested to 3107 psi after they are installed on the reactor vessel to the head adapters and are checked again during the hydrotest of the completed reactor coolant system.

C. Control rod drive mechanism housings are made of type 304 stainless steel. This material exhibits excellent notch toughness at all temperatures that will be encountered.

D. Stress levels in the mechanisms are not affected by system transients at power or by thermal movement of the coolant loops.

However, it is postulated that the top plug on the CRDM will become loose and will be forced upward by the water jet. The following sequence of events is assumed:

1. The drive shaft and control rod cluster are forced out of the core by the differential pressure of 2500 psi across the drive shaft. The drive shaft and control rod cluster, latched together, are assumed fully inserted when the accident starts.

2. After approximately 12 ft of travel, the rod cluster control spider hits the underside of the upper support plate (part of the integrated head).

3. Upon impact the flexure arms in the coupling joining the drive shaft and control cluster fracture, completely freeing the drive shaft from the control rod cluster. It is assumed that the control cluster would be completely stopped by the upper support plate; however, the drive shaft would continue to be accelerated upward, hitting the missile shield provided.

The CRDM missiles are summarized in table 3.5.1-2. The velocity of the missiles has been calculated by balancing the forces due to the water jet. No spreading of the water jet has been assumed. These missiles are contained by the integrated head missile shield.

TABLE 3.5.1-7 (SHEET 2 OF 3)

Protected Systems and Components	Missile Barrier	Minimum Concrete Thickness (in.) Walls	Roof	Floor	Design Concrete Strength (psi)
Diesel generators, diesel generator fuel oil system, combustion air intake	Diesel generator building	24	21	-	4000
Diesel generator combustion air exhaust	Concrete barrier (horizontal missile)	24		-	6000
	Steel Plate (vertical missile)				
Diesel fuel storage tank, diesel fuel transfer pumps and pump motors	Diesel fuel storage tank pumphouse	24	21	-	4000
Main steam line isolation valves	Auxiliary and control building main steam valve rooms	24	21	-	5000-auxiliary building 4000-control building
Category 1 water storage tanks	Cylindrical walls and sloping roof	24	21	-	4000
Category 1 water storage pumps, valves, and piping	Enclosures adjoining tanks	24	21	-	4000
Nuclear service cooling water tower fan motors	Enclosures	24	21	-	4000
Nuclear service cooling water pumps	Nuclear service cooling tower valve houses	24	21	-	4000
Auxiliary feedwater pumps, motors, valves, and piping	Auxiliary feedwater pump house	24	21	-	4000
Category 1 piping and electrical cables	Category 1 tunnels, or buried a minimum 6 ft backfill cover or 21 in. concrete cover or a total 6 ft combination of backfill and concrete	24	21	-	4000

TABLE 3.6.1-1 (SHEET 1 OF 2)

ESSENTIAL, HIGH-ENERGY, AND MODERATE-ENERGY SYSTEMS

System	Essential[a] Systems	High[b] Energy	Moderate Energy
Reactor coolant	0	0	
Nuclear service cooling water	0		0
Component cooling water	0		0
Safety injection	0	0	
Residual heat removal	0	0[c]	0
Containment spray	0		0
Chemical volume and control	0	0	0
Nuclear sampling		0	
Spent fuel cooling and purification	0		0
Auxiliary component cooling water			0
Main steam	0	0	
Auxiliary feedwater	0	0	0
Condensate and main feedwater	0	0	
Auxiliary steam		0	
Steam generator blowdown	0	0	
Safety-related heating, ventilating, and air conditioning	0		0
Essential chilled water	0		0
Waste processing		0	

is the largest in the loop containing the last pump to be started. For the first pump shutdown case, the transient is the reverse of the last pump startup transient.

The 4000 occurrences listed in table 3.9.N.1-1 include RCP startups and shutdowns associated with RCS heatup and cooldown.

3.9.N.1.1.1.2 Heatup and Cooldown. For purposes of designing the major RCS components, the plant heatup and cooldown operations are conservatively represented by continuous 100°F/h ramp temperature changes, between the shutdown temperature of 120°F[1] and the no-load temperature of 557°F (for the pressurizer vessel, the design cooldown rate is 200°F/h). The number of plant heatup and cooldown operations is defined as 200 each, which corresponds to 5 occurrences per year for the 40-year plant design life. In practice these operations occur more slowly. Some factors which contribute to the lower rates are as follows:

- Material ductility considerations which limit temperature rates of change as functions of RCS pressure and temperature.
- Slower heatup rates when using pump energy only.
- Interruptions due to factors such as pressurizer steam bubble formation, control rod withdrawal, sampling, oxygen scavenging, and other reactor coolant chemistry adjustments.

RCS temperature can be as low as 70°F during the shutdown period. Between 70°F and 120°F the temperature is assumed to change very slowly, without causing any significant thermal transient effects.

3.9.N.1.1.1.3 Unit Loading and Unloading Between 0 and 15 Percent of Full Power. The unit loading and unloading cases between the 0- and 15-percent power levels are represented by continuous and uniform ramp power changes, requiring 30 min for loading and 5 min for unloading. During loading, reactor coolant temperatures are increased from the no-load value to the normal load program temperatures at the 15-percent power level. The reverse temperature change occurs during unloading.

Prior to loading, it is assumed that the plant is at hot standby, with 32°F feedwater cycling. Loading commences and the feedwater temperature is assumed to increase from 32°F to the 15-percent power value. During each loading cycle, the auxiliary feedwater nozzle experiences two cycles of cold (32°F) feedwater addition. In addition, the main feedwater nozzle

experiences a step change from 32°F to a final temperature determined for each loading cycle. The duration of the cold feedwater is 30 to 60 s and is picked to maximize the stresses on the steam generator and nozzles. Subsequent to unloading, feedwater heating is terminated, steam dump is reduced to residual heat removal (RHR) requirements, and feedwater temperature decreases from the 15-percent power value to 32°F. RCS pressure and pressurizer pressure are assumed to remain constant at the normal operating values during these operations.

The number of these loading and unloading transients is assumed to be 500 each during the 40-year plant design life.

3.9.N.1.1.1.4 Unit Loading and Unloading at 5 Percent of Full Power/min. The unit loading and unloading operations are conservatively represented by continuous and uniform ramp power changes of 5 percent/min between the 15- and 100-percent power levels. This load swing is the maximum possible consistent with operation under automatic reactor control. The reactor temperature varies with load as prescribed by the reactor control system. The unit loading is accomplished by manual rod control because the automatic control rod withdrawal capability has been disabled.

The number of unloading operations is defined as 13,200, based on one swing per day during the 40-year design life of the plant and assuming a 90-percent availability factor.

It is also possible that as many as 2000 of the loading operations may be conducted in accordance with the "reduced temperature return to power" transient discussed in the following section. Both of these transients must be evaluated to determine which is more severe for a particular component design. If the reduced temperature mode is the more severe, then 2000 occurrences of that transient should replace 2000 occurrences of the 5 percent of full power/min loading operation, reducing the number of 5 percent of full power/min loadings to 11,200.

3.9.N.1.1.1.5 Reduced Temperature Return to Power. The reduced temperature return to power operation is designed to improve the spinning reserve capabilities of the plant during load-follow operations. The transient normally begins at the ebb (50 percent) of a load-follow cycle and proceeds at a rapid positive rate (typically 5 percent/min) until the abilities of the control rods and the coolant temperature reduction (negative moderator coefficient) to supply reactivity are exhausted. At that point, further power increases are limited to approximately 1 percent/min, by the ability of the boron system to dilute the reactor coolant. The reduction in primary coolant temperature

is limited by the protection system to about 20°F below the programmed value. The plant loading during load follow operations is accomplished by manual rod control because the automatic control rod withdrawal capability has been disabled.

The reduced temperature return to power operation is not intended for daily use. It is designed to supply additional plant capabilities when required because of network fault or upset condition. Hence, this mode of operation is not expected to be used more than once a week in practice (2000 times in 40 years).

3.9.N.1.1.1.6 Step-Load Increase and Decrease of 10-Percent of Full Power. The ±10-percent step change in load demand is a transient which is assured to be a change in turbine control valve position due to disturbances in the electrical network into which the plant output is tied. The reactor control system is designed to restore plant equilibrium without reactor trip following a 10-percent step change in turbine load demand initiated from nuclear plant equilibrium conditions in the range between 15 and 100 percent of full load, the power range for automatic reactor control. In effect, during load change conditions, the RCS attempts to match turbine and reactor outputs such that peak reactor coolant temperature is minimized and reactor coolant temperature is restored to its programmed setpoint at a sufficiently slow rate to prevent excessive pressurizer pressure decrease. Manual rod control may be needed following a load increase transient because the automatic control rod withdrawal capability has been disabled.

Following a step decrease in turbine load, the secondary side steam pressure and temperature initially increase because the decrease in nuclear power lags the decrease in turbine load. During the same increment of time, the RCS average temperature and pressurizer pressure also increase, but this change lags slightly behind the secondary side change. Because of the coolant temperature increase and the power mismatch between turbine and reactor, the control system automatically inserts the control rods to reduce core power. The reactor coolant temperature then decreases from its peak value to a value below its initial equilibrium value. The change in reactor coolant average temperature setpoint is made as a function of turbine-generator load, as determined by first-stage turbine pressure measurement. Pressurizer pressure also decreases from its peak value and follows the reactor coolant decreasing temperature trend. At some point during the decreasing pressure transient, the saturated water in the pressurizer begins to flash; this reduces the rate of pressure decrease. Subsequently, the pressurizer heaters come on to restore the pressure to its normal value.

Following a step increase in turbine load, the reverse situation occurs; i.e., the secondary side steam pressure and temperature initially decrease and the reactor coolant average temperature and pressure initially decrease. Manual rod control is used to withdraw the control rods to increase core power. The decreasing pressure transient is reversed by actuation of the pressurizer heaters and eventually the system pressure is restored to its normal value. The reactor coolant average temperature is raised to a value above its initial equilibrium value.

The number of each operation is specified at 2000 times, or 50 times per year for the 40-year plant design life.

3.9.N.1.1.1.7 Large Step-Load Decrease with Steam Dump. This transient applies to a step decrease in turbine load from full power of such magnitude that the resultant rapid increase in reactor coolant average temperature and secondary side steam pressure and temperature automatically initiates a secondary side steam dump that prevents both reactor trip and lifting of steam generator safety valves. The VEGP Units 1 and 2 are designed to accept a step decrease of 50 percent from full power.

Subsequent to the large step-load decrease, reactor power is reduced at a controlled rate, resulting in lower flow through the steam dump system. Another consequence of this event is turbine overspeed to as high as 110 percent of nominal (controlled overspeed just below the turbine overspeed trip setpoint). This results in proportional increases in generator bus frequency, RCP speed, and reactor coolant flowrate.

The number of occurrences of this transient is specified at 200 times (5 per year) for the 40-year plant design life.

3.9.N.1.1.1.8 Steady-State Fluctuations. It is assumed that reactor coolant pressure and temperature can vary around the nominal (steady-state) values during power operation. These variations can occur at many frequencies, but for design purposes two cases are considered:

- Initial Fluctuations

  Initial fluctuations are due to control rod cycling during the first 20 full-power months of reactor operation. Reactor coolant temperatures are assumed to vary by ±3°F and pressure by ±25 psi once during each 2-min period. The total number of occurrences is limited to 1.5×10^5. These fluctuations are assumed to occur consecutively, but not simultaneously, with random fluctuations.

- Random Fluctuations

  Reactor coolant temperature is assumed to vary by ±0.5°F and pressure by ±6 psi, once during each 6-min period. The total number of occurrences during the plant design life does not exceed 3.0×10^6.

3.9.N.1.1.1.9 Boron Concentration Equalization. Following any large change in boron concentration in the RCS, the pressurizer spray is operated to equalize concentration between the loops and the pressurizer. This can be done by manually operating the pressurizer backup heaters, thus causing a pressure increase and initiation of spray at a pressurizer pressure of approximately 2275 psia. The pressure increases to approximately 2281 psia before being returned to 2250 psia by the proportional spray. The pressure is then maintained at 2250 psia by spray operation, matching the heat input from the backup heaters until the concentration is equalized.

For design purposes, it is assumed that this operation is performed once after each load change (increase and decrease) in the design load follow cycle. With two load changes per day and a 90-percent plant availability factor over the 40-year design life, the total number of occurrences is 26,400.

3.9.N.1.1.1.10 Feedwater Cycling. This transient can occur when the plant is being maintained at hot standby or no-load conditions. It is assumed that the low steam generation rate is made up by intermittent (slug) feeding of 32°F feedwater into the steam generator.

For design purposes, 2000 occurrences are assumed over the life of the plant. Feedwater additions required during plant heatup and cooldown operations are also assumed to be covered by the feedwater cycling transient but with no increase in the total number of cycles.

3.9.N.1.1.1.11 Loop out of Service. The plant may be operated at a reduced power level with a single loop out of service for limited periods of time. This is accomplished by reducing reactor power and tripping a single RCP. Flow increases in the loops which remain in service (active loops), and reverse flow is established in the loop with the idle pump (inactive loop). Flow through the reactor is reduced.

For design purposes, loop shutdown is assumed to occur twice per year or 80 times during the life of the plant.

Returning an inactive loop to service involves reducing reactor power to approximately 10 percent and stabilizing conditions.

Then the inactive RCP is started up and conditions are again stabilized at the same power level. Subsequent return to full power is then conducted in accordance with a normal loading operation.

Seventy occurrences of loop startup are defined for design purposes. This number is based on the assumption that the inactive pump is inadvertently started up at maximum allowable power level 10 times during the life of the plant. (This transient is covered under upset conditions.)

3.9.N.1.1.1.12 Refueling. At the beginning of the refueling operation, the RCS is assumed to have been cooled down to 140°F. The vessel head is removed, and the refueling canal is filled. This is done by transferring water from the refueling water storage tank, which is outdoors and conservatively assumed to be at 32°F, into the loops by means of the RHR pumps. The refueling water flows directly into the reactor vessel via the accumulator connections and cold legs.

This operation is assumed to occur twice per year or 80 times over the life of the plant.

3.9.N.1.1.1.13 Turbine Roll Test. This transient is imposed upon the plant during the hot functional test period for turbine cycle checkout. RCP power is used to heat the reactor coolant to operating temperature (no-load conditions), and the steam generated is used to perform a turbine roll test. However, the plant cooldown during this test exceeds the 100°F/h design rate.

Twenty such test cycles are specified to be performed at the beginning of plant operating life prior to reactor operation. This transient occurs before plant startup, and the number of cycles is therefore independent of other operating transients.

3.9.N.1.1.1.14 Primary Side Leakage Test. A leakage test is performed after each opening of the primary system. During this test, the primary system pressure is raised (for design purposes) to 2500 psia, with the system temperature above the minimum temperature imposed by reactor vessel material ductility requirements, while the system is checked for leaks.

In actual practice, the primary system is pressurized, in accordance with ASME Section XI IWA-5211(a) and IWB-5221(a), as measured at the pressurizer, to prevent the pressurizer safety valves from lifting during the leakage test. In addition, the secondary side of the steam generator must be pressurized so that the pressure differential across the tube sheet does not exceed 1600 psi. This is accomplished with the steam, feedwater, and blowdown lines closed off.

For design purposes, it is assumed that 200 cycles of this test occur during the 40-year design life of the plant.

3.9.N.1.1.1.15 Secondary Side Leakage Test. During the life of the plant it may be necessary to check the secondary side of the steam generator, particularly the manway closure, for leakage. For design purposes, it is assumed that the generator secondary side is pressurized to just below its design pressure to prevent the safety valves from lifting. In order not to exceed a secondary side to primary side pressure differential of 670 psi, the primary side must also be pressurized. The primary system must be above the minimum temperature imposed by reactor vessel material ductility requirements, that is, between 120°F and 250°F.

It is assumed that this test is performed 80 times during the life of the plant.

3.9.N.1.1.2 Upset Conditions

The following primary system transients are considered upset conditions:

- Loss of load without immediate reactor trip.
- Loss of power.
- Partial loss of flow.
- Reactor trip from full power:
  - With no cooldown.
  - With cooldown and no safety injection (SI).
  - With cooldown and SI.
- Inadvertent RCS depressurization.
- Inadvertent startup of an inactive loop.
- Control rod drop.
- Inadvertent SI actuation.
- Excessive feedwater flow.
- Operating basis earthquake (OBE).

- Excessive bypass feedwater flow transient.
- Reactor Coolant System Cold Overpressurization.

3.9.N.1.1.2.1 Loss of Load Without Immediate Reactor Trip. This transient involves a step decrease in turbine load from full power (turbine trip) without immediate automatic reactor trip. These conditions produce the most severe pressure transient on the RCS under upset conditions. The reactor eventually trips as a consequence of a high pressurizer level trip initiated by the reactor protection system. Since redundant means for tripping the reactor are provided by the reactor protection system, a transient of this nature is not expected, but is included to ensure a conservative design.

The number of occurrences of this transient is specified at 80 times, or twice per year for the 40-year plant design life.

3.9.N.1.1.2.2 Loss of Power. This transient applies to a loss of outside electrical power to the plant, which is assumed to be operating initially at 100 percent power, followed by reactor and turbine trips. The RCPs are deenergized, as are electrical loads connected to the turbine-generator bus, including the main feedwater and condensate pumps. As the RCPs coast down, RCS flow reaches an equilibrium value under natural circulation. This condition permits removal of core residual heat through the steam generators which by this time are receiving feedwater, assumed to be at 32°F, from the auxiliary feedwater system. For equipment design purposes, it is conservatively assumed that the auxiliary feedwater pumps operate within 1 min following the loss of offsite power. Later in the transient, the auxiliary feedwater pumps are operated under manual control to obtain stable plant conditions. Steam is removed for reactor cooldown through atmospheric power-operated steam relief valves provided for this purpose.

The number of occurrences of this transient is specified at 40 times, or once per year for the 40-year plant design life.

3.9.N.1.1.2.3 Partial Loss of Flow. This transient applies to a partial loss of flow from full power in which an RCP is tripped out of service as the result of a loss of power to that pump. The consequences of such an accident are a reactor trip on low reactor coolant flow, followed by turbine trip and automatic opening of the steam dump system. Flow reversal occurs in the affected loop, which causes reactor coolant at cold leg temperature to pass through the steam generator and be cooled still further. This cooled water then flows through the hot leg piping and enters the reactor vessel outlet nozzles. The net result of the flow reversal is a sizable reduction in the hot leg coolant temperature of the affected loop.

The number of occurrences of this transient is specified as 80, or twice per year for the 40-year plant design life.

3.9.N.1.1.2.4 Reactor Trip from Full Power. Reactor trips from full power, which may occur for a variety of reasons, cause temperature and pressure transients in the RCS. Transients also occur in the secondary side of the steam generator due to continued heat transfer from the reactor coolant through the steam generators. These transients continue until the reactor coolant and steam generator secondary side temperatures are in equilibrium at zero power conditions. Continuation of feedwater flow and controlled steam dump remove the core residual heat and prevent the actuation of steam generator safety valves. The reactor coolant temperature and pressure undergo rapid decreases from full-power values as the reactor protection system causes the control rods to move into the core. For design purposes, reactor trip is assumed to occur a total of 400 times, or 10 times per year over the life of the plant.

The severity of the cooldown transient following a reactor trip depends on the extent of steam generator secondary side cooling. Three basic cooldown cases are considered:

Case 1 - Reactor Trip with No Cooldown

Steam and feedwater flow are both controlled to bring the plant back to the no-load conditions and maintain it at no-load. For design purposes, 230 occurrences of this transient are specified.

Case 2 - Reactor Trip with Cooldown and No SI

For this case, it is assumed that normal feedwater flow continues for approximately 1 min after the reactor trip, maintaining a high heat transfer rate through the steam generator which continues to drive the primary side pressure and temperature down. The RCS pressure decreases to just above the SI setpoint. After the feedwater flow is terminated, the plant is brought back to no-load conditions. For design purposes, 160 occurrences of this transient are specified.

Case 3 - Reactor Trip with Cooldown and SI

This transient is similar to case 2, but it is assumed that the protection system setpoints are such that the RCS pressure decreases to just below the SI setpoint. The high-head safety injection system (SIS) is actuated; its operation lowers the RCS temperature and raises the RCS pressure. After approximately 1 min, main feedwater flow is terminated while auxiliary feedwater flow (actuated on the SI signal) is continued. The plant is brought back to the no-load condition after SI is manually

terminated. For design purposes, 10 occurrences of this transient are specified.

It is assumed that the turbine control system operates as designed in 95 percent of the 400 reactor trip cases. For the remaining 5 percent, or 20 occurrences, it is conservatively assumed that this system fails, resulting in an emergency turbine overspeed. This situation could be initiated with malfunction of the turbine control system following a large step-load decrease with steam dump, resulting in turbine speed increase past the overspeed trip setpoint. It is assumed that the reactor then trips and that the turbine speed increases to 120 percent of nominal, with accompanying proportional increases in generator bus frequency, RCP speed, and reactor coolant flowrate.

For design purposes, it is assumed that the emergency turbine overspeed constitutes a special case of the reactor trip with no cooldown transient. Thus, for 20 of the 230 occurrences, the effects of the reactor coolant flow variation are to be considered in addition to the basic pressure and temperature variations.

3.9.N.1.1.2.5 Inadvertent RCS Depressurization. Several events can be postulated as occurring during normal plant operation which cause rapid depressurization of the RCS. These include:

- Actuation of a single pressurizer safety valve.
- Inadvertent opening of one pressurizer power-operated relief valve due to equipment malfunction or operator error.
- Malfunction of a single pressurizer pressure controller causing one power-operated relief valve and two pressurizer spray valves to open.
- Inadvertent opening of one pressurizer spray valve due either to equipment malfunction or operator error.
- Inadvertent auxiliary spray.

Of these events, the pressurizer safety valve actuation causes the most severe depressurization transient and is used as a conservative case.

When a pressurizer safety valve opens and remains open, the system rapidly depressurizes, the reactor trips, and the SIS is actuated. The passive accumulators of the SIS are actuated when RCS pressure decreases by approximately 1600 psi, about 5 min

after the depressurization begins. The RCS reaches an equilibrium condition where the water release rate through the open pressurizer safety valve is equivalent to the SI flow. The RCS is also cooled down by the flow through the safety valve, the SI flow, and auxiliary feedwater flow. It is assumed that auxiliary feedwater flow is terminated by the operator 10 min after the depressurization begins.

Eventually, the plant must be taken to a cold shutdown condition, as the operator can take no immediate action to stop the transient and bring the plant to hot standby if the safety valve remains open.

For design purposes, 20 occurrences of this transient are specified.

Although inadvertent auxiliary spray actuations are included among the depressurization transient events covered above, the pressurizer safety valve actuation case selected to represent all the depressurization transients does not involve spray operation. Therefore, for the previous case it is assumed that pressurizer spray is not actuated and that no temperature transients due to flow occur at the spray nozzle.

However, should auxiliary spray flow be initiated inadvertently, it could cause severe thermal shock at the pressurizer spray nozzle and on the pressurizer vessel. Therefore, to ensure a conservative design for these components, an "inadvertent auxiliary spray" transient is defined.

The inadvertent auxiliary spray transient occurs when the auxiliary spray valve is opened during normal plant operation due to failure of a control component or operator error. This introduces cold water into the pressurizer resulting in a sharp pressure decrease and eventually in a low pressure reactor trip. The temperature of the auxiliary spray flow is dependent upon the performance of the regenerative heat exchanger. The most conservative case assumes that the letdown stream is shut off and that unheated charging fluid enters the 653°F pressurizer. It is assumed that the temperature of the spray water is 70°F, and the spray flowrate is equal to the normal charging rate. It is also assumed that auxiliary spray flow continued for 5 min before termination.

The total number of occurrences of this transient during the 40-year design life of the plant is specified as 10.

3.9.N.1.1.2.6 Inadvertent Startup of an Inactive Loop. This transient can occur when a loop is out of service. With the plant operating at maximum allowable power level, the RCP in the inactive loop is started as a result of operator error. Reactor

trip occurs on high nuclear flux. All feedwater flow for the inactive loop is through the auxiliary feedwater nozzle.

For design purposes, the inadvertent loop startup transient is assumed to occur 10 times during the life of the plant.

3.9.N.1.1.2.7 Control Rod Drop. This transient occurs if a bank of control rods (worth 1-percent reactivity) drops into the fully inserted position due to a single component failure. The reactor is tripped on low pressurizer pressure, depending on time in core life and magnitude of the reactivity insertion. It is assumed that this transient occurs 80 times over the life of the plant.

3.9.N.1.1.2.8 Inadvertent SI Actuation. A spurious SI signal results in an immediate reactor trip followed by actuation of the high-head centrifugal charging pumps. These pumps deliver the contents of the boron injection tank to the RCS cold legs. The initial portion of this transient is similar to the reactor trip from full power with no cooldown. Controlled steam dump and auxiliary feedwater flow after trip removes core residual heat. Reactor coolant temperature and pressure decrease as the control rods move into the core.

Later in the transient, the injected water causes the RCS pressure to increase to the pressurizer power-operated relief valve setpoint and the primary and secondary temperatures to decrease gradually. The transient continues until the operator stops the charging pumps. It is assumed that the plant is then returned to no-load conditions, with pressure and temperature changes controlled within normal limits.

For design purposes, this transient is assumed to occur 60 times during the 40-year design life of the plant.

3.9.N.1.1.2.9 Excessive Feedwater Flow. An excessive feedwater flow transient is defined as a conservative case to cover occurrence of several events of the same general nature. The postulated transient results from inadvertent opening of a feedwater regulating valve while the plant is at the hot standby or no-load condition, with the feedwater, condensate, and heater drain systems in operation.

It is assumed that the stem of a feedwater regulating valve fails, and the valve immediately reaches the full-open position. In the steam generator, directly affected by the malfunctioning valve (failed loop), the feedwater flow step increases from essentially zero flow to the value determined by the system

resistance and the developed head of all operating feedwater pumps. Steamflow is assumed to remain at zero and the temperature of the feedwater entering the steam generator is conservatively assumed to be 32°F. Feedwater flow is isolated on a reactor coolant low T_{avg} signal; a low pressurizer pressure signal actuates the SIS. Auxiliary feedwater flow, initiated by the SI signal, is assumed to continue with all pumps discharging into the affected steam generator via the auxiliary feedwater nozzle. It is also assumed, for conservatism in the secondary side analysis, that auxiliary feedwater flows to the steam generators not affected by the malfunctioned valve, in the "unfailed loops." Plant conditions stabilize at the values reached in 600 s, at which time auxiliary feedwater flow is terminated. The plant is then either taken to cold shutdown or returned to the no-load condition at a normal heatup rate with the auxiliary feedwater system under manual control.

For design purposes, this transient is assumed to occur 30 times during the life of the plant.

3.9.N.1.1.2.10 Operating Basis Earthquake. The OBE is that earthquake which can reasonably be expected to occur during the plant life. The number of occurrences for fatigue evaluation is assumed to be 5 earthquakes of 10 cycles each (50 cycles total).

3.9.N.1.1.2.11 Excessive Bypass Feedwater Flow Transient. This transient results from a postulated feedwater bypass valve failure and provides 75 percent of nominal feedwater flow through the auxiliary feedwater nozzle. Thirty occurrences of this transient are assumed.

3.9.N.1.1.2.12 RCS Cold Overpressurization. RCS cold overpressurization occurs during startup and shutdown conditions at low temperature, with or without existence of a steam bubble in the pressurizer, and is especially severe when the reactor coolant system is in a water-solid configuration. The event is inadvertant, and usually generated by any one of a variety of malfunctions or operator errors. All events which have occurred to date may be categorized as belonging to either events resulting in the addition of mass (mass input transient) or events resulting in the addition of heat (heat input transient). All these possible transients are represented by composite "umbrella" design transients, referred to here as RCS cold overpressurization.

3.9.N.1.1.3 Emergency Conditions

The following primary system transients are considered emergency conditions:

- Small loss-of-coolant accident (LOCA).
- Small steam line break.
- Complete loss of flow.

3.9.N.1.1.3.1 Small LOCA. For design transient purposes the small LOCA is defined as a break equivalent to the severance of a 1-in. inside diameter (ID) branch connection. (Breaks smaller than 0.375 in. ID can be handled by the normal makeup system and produce no significant fluid systems transients). Breaks which are much larger than 1 in. cause accumulator injection soon after the accident and are regarded as faulted conditions. It is assumed that the SIS is actuated immediately after the break occurs and delivers water at a minimum temperature of 32°F to the RCS.

For design purposes, it is assumed that this transient occurs five times during the life of the plant.

3.9.N.1.1.3.2 Small Steam Line Break. For design transient purposes, a small steam line break is defined as a break equivalent in effect to a steam generator safety valve opening and remaining open.

The following conservative assumptions are made:

- The reactor is initially in a hot, zero-power condition.
- The small steam line break results in immediate reactor trip and SI actuation.
- A large shutdown margin, coupled with no feedback or decay heat, prevents heat generation during the transient.

Operation of the high-head SI/charging pumps repressurizes the RCS within a relatively short time to the actuation pressure of the pressurizer power-operated relief valves. These valves open, and an equilibrium condition is established in which the flow through the valves matches the SI flow input to the RCS.

This transient is assumed to occur five times during the life of the plant.

3.9.N.1.1.3.3 Complete Loss of Flow. This accident involves a complete loss of flow from full power resulting from simultaneous loss of power to all RCPs. The consequences are a reactor trip and turbine trip on undervoltage followed by automatic opening of the steam dump system.

For design purposes, this transient is assumed to occur five times during the plant lifetime.

3.9.N.1.1.4 Faulted Conditions

The following primary system transients are considered faulted conditions, which are evaluated for one occurrence:

- Reactor coolant pipe break (large LOCA).
- Large steam line break.
- Feedwater line break.
- RCP locked rotor.
- Control rod ejection.
- Steam generator tube rupture.
- Simultaneous steam line-feedwater line break.
- Safe shutdown earthquake (SSE).

3.9.N.1.1.4.1 Reactor Coolant Pipe Break (Large LOCA). Following rupture of a reactor coolant pipe resulting in a large loss of coolant, the primary system pressure decreases rapidly causing the primary system temperature to decrease. Because of the rapid blowdown of coolant from the system and the comparatively large heat capacity of the metal sections of the components, it is likely that the metal will remain at or near the operating temperature during the blowdown. The SIS is actuated to introduce water, at an assumed minimum temperature of 32°F, into the RCS. The SI signal also results in reactor and turbine trips.

3.9.N.1.1.4.2 Large Steam Line Break. The transient is based on the complete rupture of a main steam line. The following conservative assumptions are made:

- The plant is initially at the hot, no-load condition.
- The steam line break results in immediate reactor trip and actuation of the SIS.

- Offsite power is lost at the time of the break. All RCPs are deenergized and coolant flow coasts down to the natural circulation value.

- The SIS operates at design capacity and repressurizes the RCS within a relatively short time.

In the analysis the effects of core decay heat, thick metal stored energy, and steam generator reverse heat transfer are included in order to maximize RCS post-break pressurization. These represent the most conservative cases for reactor vessel design and evaluation. The results are also characterized by high feedwater flow.

The worst case large steam break, with respect to the steam generator tubes and tube sheet, occurs outside containment with the plant initially at full power. The affected steam generator will rapidly blow down to atmospheric pressure. It is assumed that the auxiliary feedwater system will deliver 1410 gal/min at 32°F to the affected steam generator via the auxiliary feedwater nozzle. The primary side repressurizes to the pressurizer safety valve set pressure, resulting in a large differential pressure across the tubes and tube sheet.

3.9.N.1.1.4.3 Feedwater Line Break. This accident involves the double-ended rupture of a main feedwater line, resulting in rapid blowdown of the affected steam generator and termination of feedwater flow to the others. The plant is assumed to be operating at an initial power level of 102 percent of engineered safeguards design rating when the break occurs. Turbine trip, with immediate reactor trip, occurs on a low-low level signal from the faulted steam generator.

The auxiliary feedwater system is actuated within 1 min and supplies two intact steam generators with flow equivalent to the capacity of one motor-driven auxiliary feedwater pump via the auxiliary feedwater nozzle. Loss of the plant from the grid is assumed to cause a loss of offsite power; all RCPs are deenergized and coolant flow coasts down to the natural circulation value. The SIS is actuated and is assumed to deliver maximum safeguards flow until manually shut off at approximately 600 s.

3.9.N.1.1.4.4 RCP Locked Rotor. This accident is based on the instantaneous seizure of an RCP with the plant operating at full power. The locked rotor can occur in any loop. Reactor trip occurs almost immediately, as the result of low coolant flow in the affected loop.

3.9.N.1.1.4.5 Control Rod Ejection. This accident is based on the single most reactive control rod being instantaneously removed from the core. This reactivity insertion in a particular region of the core causes a severe pressure increase in the RCS, such that the pressurizer safety valves lift, and also causes a more severe temperature transient in the loop associated with the affected region than in the other loops. For conservatism, the analysis is based on the reactivity insertion and does not include the mitigating effects (on the pressure transient) of coolant blowdown through the hole in the vessel head vacated by the ejected rod.

3.9.N.1.1.4.6 Steam Generator Tube Rupture. This accident is postulated as the double-ended rupture of a single steam generator tube resulting in decreases in pressurizer level and RCS pressure. Eventually the loss of reactor coolant causes a reactor trip (also a turbine trip) on low pressurizer pressure. The ensuing plant cooldown results in SIS actuation due to low pressurizer pressure. The SI signal automatically starts the auxiliary feedwater pumps and isolates the main feedwater lines. The steam line leading from the affected steam generator is isolated manually. When the pressurizer water level is recovered, the operator stops the SI pumps and uses the auxiliary feedwater system to conduct an orderly cooldown to cold shutdown conditions.

Primary side temperatures are assumed to remain constant at their initial values for 10 min following the rupture. After 10 min, the primary side temperatures and the steam temperature are assumed to vary in the same way as for the reactor trip with cooldown and SI transient. Main feedwater flow consistent with the initial power level is assumed for the first 10 min. After 10 min, main feedwater flow is terminated and auxiliary feedwater flow initiated.

3.9.N.1.1.4.7 Simultaneous Steam Line-Feedwater Line Break. This transient is based on the simultaneous, complete severance of both a main steam line and a feedwater line. It is postulated to occur when the pipe whip or missile resulting from the severance of a steam line results in the complete severance of the smaller feedwater line connected to the same steam generator. Since the velocity of the whip or missile can be very high, the two lines are assumed to break simultaneously. To ensure conservatism, this transient is assumed to occur at any power level between hot, zero, and full power.

3.9.N.1.1.4.8 Safe Shutdown Earthquake. The SSE is defined as the maximum vibratory ground motion which can reasonably be predicted from geologic and seismic evidence. The mechanical

dynamic or static equivalent loads due to the vibratory motion of the SSE are considered on a component basis.

3.9.N.1.1.5 Test Conditions

The following primary system transients are considered test conditions:

- Primary side hydrostatic test.
- Secondary side hydrostatic test.
- Tube leakage test.

3.9.N.1.1.5.1 Primary Side Hydrostatic Test. The pressure tests covered by this section include both shop and field hydrostatic tests which occur as a result of component or system testing. This hydro test is performed at a water temperature which is compatible with reactor vessel material ductility requirements and a test pressure of 3107 psig (1.25 times design pressure). In this test, the RCS is pressurized to 3107 psig, consistent with steam generator secondary side pressure of 0 psig.

The RCS is designed for 10 cycles of these hydrostatic tests, which are performed prior to plant startup. The number of cycles is independent of other operating transients.

Additional hydrostatic tests may be performed to meet the inservice inspection requirements of ASME Section XI, subarticle IWB-5200. A total of four such tests is expected. The increase in the fatigue usage factor caused by these tests is easily covered by the conservative number (200) of primary side leakage tests that are considered for design.

3.9.N.1.1.5.2 Secondary Side Hydrostatic Test. The secondary side of the steam generator is pressurized to 1.25 design pressure with a minimum water temperature of 120°F, coincident with the primary side at 0 psig.

For design purposes, it is assumed that the steam generator will experience 10 cycles of this test.

These tests may be performed either prior to plant startup, or subsequently following major repairs, or both. The number of cycles is independent of other operating transients.

3.9.N.1.1.5.3 Tube Leakage Test. During the life of the plant it may be necessary to check the steam generator for tube leakage and tube-to-tube sheet leakage. This is done by visual

inspection of the underside (channel head side) of the tube sheet for water leakage, with the secondary side pressurized. Tube leakage tests are performed during plant cold shutdown. For these tests, the secondary side of the steam generator is pressurized with water, initially at a relatively low pressure; and the primary system remains depressurized. The underside of the tube sheet is examined visually for leaks. If any are observed, the secondary side is depressurized and repairs made by tube plugging. The secondary side is then repressurized (to a higher pressure), and the underside of the tube sheet is again checked for leaks. This process is repeated until all the leaks are repaired. The maximum (final) secondary side test pressure reached is 840 psig. Both the primary and secondary sides of the steam generators are at ambient temperatures during these tests.

Test Pressure (psig)	Number of Occurrences
200	400
400	200
600	120
840	80

The total number of tube leakage test cycles is defined as 800 during the 40-year life of the plant.

3.9.N.1.2 Computer Programs Used in Analyses

The following computer programs have been used in dynamic and static analyses to determine mechanical loads, stresses, and deformations of Seismic Category 1 components and equipment. These are described and verified in references 1 and 3.

- WESTDYN - static, dynamic, and fatigue analysis of redundant piping systems.
- FIXFM-3[a] - time-history response of three-dimensional structures.
- WESDYN-2[a] - piping system stress analysis from time-history displacement data.
- THRUST - hydraulic loads on loop components from blowdown information.
- WECAN - finite element structural analysis.

a. These capabilities have been incorporated into WESTDYN.

- MULTIFLEX - thermal-hydraulic structure systems dynamics.

3.9.N.1.3 Experimental Stress Analysis

No experimental stress analysis methods are used for Seismic Category 1 systems or components. However, Westinghouse makes extensive use of measured results from prototype plants and various scale model tests as discussed in subsection 3.9.N.2.

3.9.N.1.4 Considerations for the Evaluation of the Faulted Condition

3.9.N.1.4.1 Loading Conditions

The structural stress analyses performed on the RCS consider the loadings specified in table 3.9.B.3-1. These loads may result from any, or all of the following: thermal expansion, pressure, weight, OBE, SSE, system operating transients, LOCA loop hydraulic forces, subcompartment pressurization forces, and reactor vessel loads.

A description of the loads used in the analysis of the RCS follows.

A. Pressure

Pressure loading is identified as either membrane design pressure or general operating pressure, depending upon its application. The membrane design pressure is used in connection with the longitudinal pressure stress and minimum wall thickness calculations in accordance with the ASME Code.

The term "operating pressure" is used in connection with determination of the system deflections and support forces. The steady-state operating hydraulic forces based on the system initial pressure are applied as general operating pressure loads to the RCL model at changes in direction or flow area.

B. Weight

A weight analysis is performed to meet code requirements by applying a 1.0-g load downward on the complete piping system. The piping is assigned a distributed mass or weight as a function of its properties. This method provides a distributed loading to the piping system as a function of the weight of the pipe and contained fluid during normal operating conditions.

TABLE 3.11.B.1-1 (SHEET 11 OF 90)
ENVIRONMENTAL CONDITIONS

Environmental Designator [a]	Unit	Normal			Abnormal/Test		DBA/Post-DBA			Relative Humidity (max)	
		Temp (°F)	Pressure	Int Dose (rads)	Temp (°F) (max/min)	Pressure	Temp (°F)[i]	Pressure[i]	Int Dose (rads)	Normal (%)	DBA (%)
AUXILIARY BUILDING - LEVEL D (Continued)											
VIII-R-D40H	1/com	100	atm[c]	5×10^5	120/40	atm	Sheet 5	Sheet 6/C	1×10^8	60	100
VIII-R-D41	2	100	atm[c]	1×10^3	110/40	atm	113	-	5×10^3	60	100
VIII-R-D42H	1/com	100	atm[c]	5×10^4	120/40	atm	Sheet 5	Sheet 6/C	5×10^4	60	100
VIII-R-D43H	1/com	100	atm[c]	1×10^3	120/40	atm	Sheet 1	Sheet 6/C	1×10^3	60	100
VIII-R-D44H	1/com	100[f]	atm[c]	1×10^3	120/40	atm	Sheet 3	Sheet 6/C	1×10^3	60	100
VIII-R-D45H	1/com	100	atm[c]	5×10^5	102/40	atm	Sheet 2	Sheet 6/C	1×10^8	60	100
VIII-R-D46H	1/com	100	atm[c]	5×10^5	120/40	atm	-	-	1×10^8	60	-
VIII-R-D47H	1/com	100	atm[c]	5×10^5	120/40	atm	Sheet 2	Sheet 6/C	1×10^8	60	100
VIII-R-D48H[b]	1/com	100	atm[c]	1×10^7	120/40[d]	atm	-	-	5×10^7	60	-
VIII-R-D49H[b]	1/com	100	atm[c]	1×10^7	120/40[d]	atm	-	-	5×10^7	60	-
VIII-R-D50H	1/com	100	atm[c]	5×10^5	120/40	atm	-	-	1×10^8	60	-
VIII-R-D51H	1/com	100	atm[c]	5×10^5	120/40	atm	-	-	1×10^8	60	-
VIII-R-D52H	1/com	100	atm[c]	1×10^3	116/40	atm	Sheet 2	Sheet 6/C	1×10^3	60	100
VIII-R-D53H[h]	1/com	100	atm[c]	1×10^3	110/40	atm	Sheet 5	Sheet 6/E	5×10^3	60	100
VIII-R-D54H	1/com	100	atm[c]	5×10^5	120/40	atm	Sheet 5	Sheet 6/C	1×10^8	60	100
VIII-R-D55H	1/com	100	atm[c]	5×10^5	120/40	atm	Sheet 5	Sheet 6/C	5×10^5	60	100
VIII-R-D56H	1/com	100	atm[c]	1×10^3	110/40	atm	Sheet 5	Sheet 6/C	1×10^3	60	100
VIII-R-D57H	1/com	100	atm[c]	5×10^5	120/40	atm	-	Sheet 6/C	1×10^8	60	-
VIII-R-D58H	1/com	100	atm[c]	5×10^5	120/40	atm	Sheet 5	-	1×10^8	60	100

TABLE 3.11.B.1-1 (SHEET 18 OF 90)
ENVIRONMENTAL CONDITIONS

Environmental Designator [a]	Unit	Normal			Abnormal/Test		DBA/Post-DBA			Relative Humidity (max)	
		Temp (°F)	Pressure	Int Dose (rads)	Temp (°F) (max/min)	Pressure	Temp (°F)[i]	Pressure[i]	Int Dose (rads)	Normal (%)	DBA (%)
AUXILIARY BUILDING - LEVEL C (Continued)											
VIII-R-C27H	2	100	atm[c]	5×10^4	104/40	atm	-	-	5×10^7	60	-
VIII-R-C28H	2	100	atm[c]	5×10^5	120/40	atm	Sheet 3	Sheet 6/D	1×10^8	60	100
VIII-R-C29H	2	100	atm[c]	5×10^5	120/40	atm	Sheet 3	Sheet 6/D	1×10^8	60	100
VIII-R-C30H	2	100	atm[c]	5×10^5	120/40	atm	Sheet 4	Sheet 6/A	5×10^6	60	100
VIII-R-C31H	2	100	atm[c]	1×10^3	120/40	atm	Sheet 4	Sheet 6/D	1×10^3	60	100
VIII-R-C32H	2	100	atm[c]	1×10^3	120/40	atm	Sheet 5	Sheet 6/A	1×10^3	60	100
VIII-R-C33H	2	100	atm[c]	5×10^5	120/40	atm	-	-	1×10^8	60	-
VIII-R-C34H	2	100	atm[c]	5×10^5	120/40	atm	-	-	1×10^8	60	-
VIII-R-C35H	2	100	atm[c]	5×10^5	120/40	atm	-	-	1×10^8	60	-
VIII-R-C36H	2	100	atm[c]	5×10^5	120/40	atm	-	-	5×10^6	60	-
VIII-R-C37H	2	100	atm[c]	5×10^5	120/40	atm	Sheet 5	Sheet 6/A	1×10^8	60	100
VIII-R-C38H[b]	2	100	atm[c]	5×10^4	104/40	atm	-	-	5×10^6	60	-
VIII-R-C39	2	104	atm[c]	1×10^3	120/40	atm	-	-	5×10^3	60	-
VIII-R-C40H	2	100	atm[c]	5×10^5	120/40	atm	Sheet 1	Sheet 6/A	1×10^8	60	100
VIII-R-C41H	2	100	atm[c]	5×10^5	118/40	atm	Sheet 1	Sheet 6/A	1×10^8	60	100
VIII-R-C42H	2	100	atm[c]	5×10^5	120/40	atm	Sheet 2	Sheet 6/A	5×10^5	60	100
VIII-R-C43H	2	100	atm[c]	5×10^5	121/40	atm	Sheet 2	Sheet 6/D	1×10^8	60	100
VIII-R-C44H	2	100	atm[c]	1×10^3	120/40	atm	Sheet 4	Sheet 6/D	5×10^3	60	100
VIII-R-C45H	2	100	atm[c]	5×10^5	120/40	atm	Sheet 3	Sheet 6/A	1×10^8	60	100
VIII-R-C46H	2	100	atm[c]	5×10^5	110/40	atm	Sheet 3	Sheet 6/A	1×10^8	60	100

TABLE 3.11.B.1-1 (SHEET 19 OF 90)
ENVIRONMENTAL CONDITIONS

Environmental Designator [a]	Unit	Normal			Abnormal/Test		DBA/Post-DBA			Relative Humidity (max)	
		Temp (°F)	Pressure	Int Dose (rads)	Temp (°F) (max/min)	Pressure	Temp (°F)[i]	Pressure[i]	Int Dose (rads)	Normal (%)	DBA (%)
AUXILIARY BUILDING - LEVEL C (Continued)											
VIII-R-C47H	2	100	atm[c]	5×10^5	120/40	atm	Sheet 3	Sheet 6/A	1×10^8	60	100
VIII-R-C48H	1/com	100	atm[c]	5×10^5	120/40	atm	Sheet 3	Sheet 6/A	1×10^8	60	100
VIII-R-C49H	2	100	atm[c]	1×10^3	113/40	atm	Sheet 3	Sheet 6/A	1×10^3	60	100
VIII-R-C50H	2	100	atm[c]	5×10^5	107/40	atm	Sheet 3	Sheet 6/D	1×10^8	60	100
VIII-R-C51H	2	100	atm[c]	5×10^5	120/40	atm	Sheet 5	Sheet 6/D	5×10^5	60	100
VIII-R-C52H	2	100	atm[c]	5×10^5	100/40	atm	-	-	1×10^8	60	-
VIII-R-C53H	1/com	100[f]	atm[c]	5×10^5	120/40	atm	Sheet 4	Sheet 6/A	1×10^8	60	100
VIII-R-C54H	2	100	atm[c]	1×10^9	120/40	atm	-	-	1×10^9	60	-
VIII-R-C55H	2	100	atm[c]	5×10^5	120/40	atm	Sheet 3	Sheet 6/D	1×10^8	60	100
VIII-R-C56H	2	100	atm[c]	5×10^5	105/40	atm	Sheet 3	Sheet 6/D	1×10^8	60	100
VIII-R-C57H	2	100	atm[c]	5×10^4	120/40	atm	Sheet 3	Sheet 6/D	5×10^4	60	100
VIII-R-C58H	1/com	100	atm[c]	1×10^3	120/40	atm	Sheet 4	Sheet 6/D	1×10^3	60	100
VIII-R-C59H	1/com	100[f]	atm[c]	1×10^3	120/40	atm	Sheet 3	Sheet 6/C	1×10^3	60	100
VIII-R-C60H	1/com	100[f]	atm[c]	5×10^5	120/40	atm	Sheet 4	Sheet 6/D	5×10^6	60	100
VIII-R-C61H	1/com	100	atm[c]	5×10^5	120/65	atm	Sheet 1	Sheet 6/D	1×10^8	60	100
VIII-R-C62H	1/com	100	atm[c]	5×10^4	120/40	atm	Sheet 1	Sheet 6/D	1×10^5	60	100
VIII-R-C63H	1/com	100	atm[c]	5×10^5	120/40	atm	Sheet 1	Sheet 6/D	1×10^8	60	100
VIII-R-C64H	1/com	100	atm[c]	5×10^5	129/65	atm	Sheet 2	Sheet 6/D	1×10^8	60	100

TABLE 3.11.B.1-1 (SHEET 20 OF 90)
ENVIRONMENTAL CONDITIONS

Environmental Designator [a]	Unit	Normal			Abnormal/Test		DBA/Post-DBA			Relative Humidity (max)	
		Temp (°F)	Pressure	Int Dose (rads)	Temp (°F) (max/min)	Pressure	Temp (°F)[i]	Pressure[i]	Int Dose (rads)	Normal (%)	DBA (%)
AUXILIARY BUILDING - LEVEL C (Continued)											
VIII-R-C65H	1/com	100	atm[c]	5×10^5	118/65	atm	Sheet 2	Sheet 6/D	1×10^8	60	100
VIII-R-C66H	1/com	100	atm[c]	5×10^5	124/40	atm	Sheet 2	Sheet 6/D	1×10^8	60	100
VIII-R-C67H	1/com	100	atm[c]	5×10^5	121/40	atm	Sheet 2	Sheet 6/D	1×10^8	60	100
VIII-R-C68H	1/com	100	atm[c]	5×10^5	110/40	atm	Sheet 3	Sheet 6/D	1×10^8	60	100
VIII-R-C69H	1/com	100	atm[c]	5×10^5	120/40	atm	Sheet 3	Sheet 6/D	1×10^8	60	100
VIII-R-C70H	1/com	100	atm[c]	5×10^5	120/40	atm	Sheet 3	Sheet 6/D	1×10^8	60	100
VIII-R-C71H	1/com	100	atm[c]	5×10^5	120/40	atm	Sheet 3	Sheet 6/D	1×10^8	60	100
VIII-R-C72H	1/com	100	atm[c]	5×10^5	105/40	atm	Sheet 3	Sheet 6/D	1×10^8	60	100
VIII-R-C73H	1/com	100	atm[c]	5×10^4	120/40	atm	Sheet 3	Sheet 6/D	5×10^4	60	100
VIII-R-C74H	1/com	100	atm[c]	5×10^5	120/40	atm	Sheet 3	Sheet 6/D	1×10^8	60	100
VIII-R-C75H	1/com	100	atm[c]	1×10^9	120/40	atm	-	-	1×10^9	60	-
VIII-R-C76H	1/com	100[f]	atm[c]	5×10^5	120/40	atm	Sheet 4	Sheet 6/A	1×10^8	60	100
VIII-R-C77H[b]	1/com	100	atm[c]	5×10^5	100/40	atm	-	-	1×10^8	60	-
VIII-R-C78H	1/com	100	atm[c]	5×10^5	120/40	atm	Sheet 5	Sheet 6/D	5×10^5	60	100
VIII-R-C79H	1/com	100	atm[c]	5×10^5	107/40	atm	Sheet 3	Sheet 6/D	1×10^8	60	100
VIII-R-C80H	1/com	100	atm[c]	5×10^5	120/40	atm	-	-	1×10^8	60	-
VIII-R-C81H	1/com	100	atm[c]	5×10^5	120/40	atm	-	-	1×10^8	60	-
VIII-R-C82H	1/com	100	atm[c]	5×10^5	120/40	atm	-	-	1×10^8	60	-
VIII-R-C83H[h]	1/com	100	atm[c]	1×10^3	113/40	atm	Sheet 4	Sheet 6/D	1×10^3	60	100

TABLE 3.11.B.1-1 (SHEET 43 OF 90)
ENVIRONMENTAL CONDITIONS

Environmental Designator [a]	Unit	Normal			Abnormal/Test		DBA/Post-DBA			Relative Humidity (max)	
		Temp (°F)	Pressure	Int Dose (rads)	Temp (°F) (max/min)	Pressure	Temp (°F)[i]	Pressure[i]	Int Dose (rads)	Normal (%)	DBA (%)
AUXILIARY BUILDING - LEVEL A (Continued)											
VIII-UCA13H	2	120	atm[c]	5×10^5	120/40	atm	Sheet 12/A	Sheet 6/B	1×10^8	60	100
VIII-UCA14H	2	120	atm[c]	1×10^7	120/40	atm	Sheet 12/A	20 psia[f]	5×10^7	60	100
AUXILIARY BUILDING - LEVEL 1											
VIII-R-101	1/com	100[f]	atm[c]	1×10^3	120/40	atm	-	-	1×10^3	60	-
VIII-R-102	1/com	100[f]	atm[c]	1×10^3	120/40	atm	-	-	1×10^3	60	-
VIII-R-103	1/com	100[f]	atm[c]	1×10^3	120/40	atm	-	-	1×10^3	60	-
VIII-R-104	1/com	100	atm[c]	1×10^3	108/40	atm	-	-	1×10^3	60	-
VIII-R-105	1/com	100	atm[c]	1×10^3	107/40	atm	-	-	1×10^3	60	-
VIII-R-106H[b]	1/com	115	atm[c]	1×10^7	120/40[d]	atm	-	-	5×10^7	60	-
VIII-R-107H[b]	1/com	131	atm[c]	5×10^5	131/40	atm	-	-	1×10^8	60	-
VIII-R-109	void										
VIII-R-110	1/com	100	atm[c]	1×10^4	104/40	atm	-	-	1×10^4	60	-
VIII-R-111[b]	1/com	128	atm[c]	1×10^3	128/40	atm	154	-	1×10^3	60	-
VIII-R-112	1/com	100[f]	atm[c]	1×10^3	120/40	atm	-	-	1×10^3	60	-
VIII-R-113	1/com	100	atm[c]	1×10^3	120/40	atm	-	-	1×10^3	60	-
VIII-R-114	1/com	100	atm[c]	1×10^3	120/40	atm	-	-	1×10^3	60	-
VIII-R-115	1/com	100	atm[c]	1×10^3	120/40	atm	-	-	1×10^3	60	-
VIII-R-116[b]	1/com	85	atm[c]	1×10^3	120/40[d]	atm	-	-	1×10^3	60	-

TABLE 3.11.B.1-1 (SHEET 44 OF 90)
ENVIRONMENTAL CONDITIONS

Environmental Designator [a]	Unit	Normal			Abnormal/Test		DBA/Post-DBA			Relative Humidity (max)	
		Temp (°F)	Pressure	Int Dose (rads)	Temp (°F) (max/min)	Pressure	Temp (°F)[i]	Pressure[i]	Int Dose (rads)	Normal (%)	DBA (%)
AUXILIARY BUILDING - LEVEL 1 (Continued)											
VIII-R-117	1/com	100[f]	atm[c]	1×10^3	120/40	atm	-	-	1×10^3	60	-
VIII-R-118[b]	1/com	85	atm[c]	1×10^3	120/40[d]	atm	-	-	1×10^3	60	-
VIII-R-120	1/com	100	atm[c]	1×10^3	112/40	atm	-	-	1×10^3	60	-
VIII-R-121	1/com	104	atm[c]	1×10^3	120/40	atm	-	-	1×10^3	60	-
VIII-R-122	1/com	100	atm[c]	1×10^3	120/40	atm	-	-	1×10^3	60	-
VIII-R-123	1/com	100	atm[c]	1×10^3	120/40	atm	-	-	1×10^3	60	-
VIII-R-124	1/com	100	atm[c]	1×10^3	120/40	atm	-	-	1×10^3	60	-
VIII-R-125	1/com	100	atm[c]	1×10^3	120/40	atm	-	-	1×10^3	60	-
VIII-R-126	1/com	100[f]	atm[c]	1×10^3	120/40	atm	-	-	1×10^3	60	-
VIII-R-127	1/com	100	atm[c]	1×10^3	120/40	atm	-	-	1×10^3	60	-
VIII-R-128	1/com	100	atm[c]	1×10^3	120/40	atm	-	-	1×10^3	60	-
VIII-R-129	1/com	100	atm[c]	1×10^3	120/40	atm	-	-	1×10^3	60	-
VIII-R-130	1/com	100	atm[c]	1×10^3	120/40	atm	-	-	1×10^3	60	-
VIII-R-131	1/com	100	atm[c]	1×10^3	120/40	atm	-	-	1×10^3	60	-
VIII-R-132	1/com	100	atm[c]	1×10^3	120/40	atm	-	-	1×10^3	60	-
VIII-R-133	1/com	100	atm[c]	1×10^3	120/40	atm	-	-	1×10^3	60	-
VIII-R-134H[b]	1/com	117	atm[c]	5×10^5	120/40	atm	119	-	1×10^8	60	-
VIII-R-135H[b]	1/com	106	atm[c]	1×10^7	120/40[d]	atm	-	-	5×10^7	60	-
VIII-R-136H[b]	1/com	100	atm[c]	1×10^3	120/40	atm	Sheet 12/B Sheet 13	Sheet 6/C	1×10^3	60	100

TABLE 3.11.B.1-1 (SHEET 46 OF 90)
ENVIRONMENTAL CONDITIONS

Environmental Designator [a]	Unit	Normal			Abnormal/Test		DBA/Post-DBA			Relative Humidity (max)	
		Temp (°F)	Pressure	Int Dose (rads)	Temp (°F) (max/min)	Pressure	Temp (°F)[i]	Pressure[i]	Int Dose (rads)	Normal (%)	DBA (%)
AUXILIARY BUILDING - LEVEL 1 (Continued)											
VIII-R-156[b]	2	128	atm[c]	1×10^3	128/40	atm	154	-	1×10^3	60	-
VIII-R-157	2	100	atm[c]	1×10^4	104/40	atm	-	-	1×10^4	60	-
VIII-R-158	void										
VIII-R-160H[b]	2	106	atm[c]	1×10^7	120/40[d]	atm	-	-	5×10^7	60	-
VIII-R-161H[b]	2	117	atm[c]	1×10^5	117/40	atm	119	-	1×10^8	60	-
VIII-R-162H[b]	2	100	atm[c]	1×10^3	120/40	atm	Sheet 12/B Sheet 13	Sheet 6/C	1×10^3	60	100
VIII-R-UC101H[b]	1/com	104[f]	atm[c]	5×10^5	120/40	atm	Sheet 5	Sheet 6/A	1×10^8	60	100
VIII-R-UC102H[b]	2	104	atm[c]	5×10^5	120/40	atm	Sheet 5	Sheet 6/A	1×10^8	60	100
AUXILIARY BUILDING - LEVEL 2											
VIII-R-201	1/com	100[f]	atm[c]	1×10^3	120/40	atm	-	-	1×10^3	60	-
VIII-R-202	1/com	100	atm[c]	1×10^3	107/40	atm	-	-	1×10^3	60	-
VIII-R-203	1/com	100	atm[c]	1×10^3	107/40	atm	-	-	1×10^3	60	-
VIII-R-204	1/com	100	atm[c]	1×10^3	116/40	atm	-	-	1×10^3	60	-
VIII-R-205[b]	1/com	128	atm[c]	1×10^3	128/40	atm	154	-	1×10^3	60	-
VIII-R-206	1/com	100[f]	atm[c]	1×10^3	120/40	atm	-	-	1×10^3	60	-
VIII-R-207[b]	1/com	100	atm[c]	1×10^3	120/40[d]	atm	-	-	1×10^3	60	-
VIII-R-208H[b]	1/com	100	atm[c]	1×10^3	120/40	atm	Sheet 12/B Sheet 13	Sheet 6/C	1×10^3	60	100
VIII-R-209H[b]	1/com	100	atm[c]	1×10^3	105/40[g]	atm	-	-	1×10^6	60	-
VIII-R-210H[b]	1/com	100	atm[c]	1×10^3	104/40	atm	-	-	1×10^6	60	-
VIII-R-211	1/com	104	atm[c]	1×10^3	120/40	atm	-	-	1×10^3	60	-

TABLE 3.11.B.1-1 (SHEET 47 OF 90)
ENVIRONMENTAL CONDITIONS

Environmental Designator [a]	Unit	Normal			Abnormal/Test		DBA/Post-DBA			Relative Humidity (max)	
		Temp (°F)	Pressure	Int Dose (rads)	Temp (°F) (max/min)	Pressure	Temp (°F)[i]	Pressure[i]	Int Dose (rads)	Normal (%)	DBA (%)
AUXILIARY BUILDING - LEVEL 2 (Continued)											
VIII-R-212H[h]	1/com	100	atm[c]	1×10^3	127/40	atm	-	-	5×10^5	60	-
VIII-R-213	void										
VIII-R-214	spare										
VIII-R-215	1/com	100[f]	atm[c]	1×10^3	120/40	atm	-	-	1×10^3	60	-
VIII-R-216	1/com	100[f]	atm[c]	1×10^3	120/40	atm	-	-	1×10^3	60	-
VIII-R-217	1/com	100	atm[c]	1×10^3	120/40	atm	-	-	1×10^3	60	-
VIII-R-218	2	104	atm[c]	1×10^3	120/40	atm	-	-	1×10^3	60	-
VIII-R-219H[b]	2	100	atm[c]	1×10^3	104/40	atm	-	-	1×10^6	60	-
VIII-R-220H[b]	2	104	atm[c]	1×10^3	105/40	atm	-	-	1×10^6	60	-
VIII-R-221H[h]	2	100	atm[c]	1×10^3	127/40	atm	-	-	5×10^5	60	-
VIII-R-222	2	100	atm[c]	1×10^3	120/40	atm	Sheet 12/B Sheet 13	Sheet 6/C	1×10^3	60	100
VIII-R-223[b]	2	100	atm[c]	1×10^3	120/40[d]	atm	-	-	1×10^3	60	-
VIII-R-224H	2	100	atm[c]	1×10^3	120/40	atm	Sheet 5	Sheet 6/A	1×10^3	60	100
VIII-R-225	2	100	atm[c]	1×10^3	120/40	atm	-	-	1×10^3	60	-
VIII-R-226	2	100	atm[c]	1×10^3	107/40	atm	-	-	1×10^3	60	-
VIII-R-227	2	100	atm[c]	1×10^3	107/40	atm	-	-	1×10^3	60	-
VIII-R-228[b]	2	100	atm[c]	1×10^3	128/40	atm	154	-	1×10^3	60	-
VIII-R-229	2	100	atm[c]	1×10^3	116/40	atm	-	-	1×10^3	60	-
VIII-R-230	2	100	atm[c]	1×10^3	120/40	atm	-	-	1×10^3	60	-

TABLE 3.11.B.1-1 (SHEET 50 of 90)
ENVIRONMENTAL CONDITIONS

Environmental Designator[a]	Unit	Normal			Abnormal/Test		DBA/Post-DBA			Relative Humidity (max)	
		Temp (°F)	Pressure	Int Dose (rads)	Temp (°F) (max/min)	Pressure	Temp (°F)[n]	Pressure[n]	Int Dose (rads)	Normal (%)	DBA (%)
CONTROL BUILDING - LEVEL C											
IX-R-C01	1/com	104	atm	1×10^3	120/55	-	-	-	1×10^3	60	-
IX-R-C02	1/com	104	atm	1×10^3	120/55	-	-	-	1×10^3	60	-
IX-R-C03	1/com	104	atm	1×10^3	120/55	-	-	-	1×10^3	60	-
IX-R-C04[b]	2	104	atm	1×10^3	120/55	-	-	-	1×10^3	60	-
IX-R-C05[b]	2	104	atm	1×10^3	120/55	-	-	-	1×10^3	60	-
IX-R-C006[b]	2	104	atm	1×10^3	120/55	-	-	-	1×10^3	60	-
IX-R-C07H	1/com	104	atm	5×10^5	120/55	-	Sheet 5	Sheet 6/A	1×10^8	60	100
IX-R-C08[b]	2	104	atm	1×10^3	120/55	-	-	-	1×10^3	60	100
IX-R-C09	1/com	104	atm	1×10^3	120/55	-	-	-	1×10^3	60	-
CONTROL BUILDING - LEVEL B											
IX-R-B01[b]	2	85	atm	1×10^3	100/65	-	-	-	5×10^3	60	-
IX-R-B02H[m]	2	100	atm	1×10^3	104/50	-	-	-	5×10^4	60	-
IX-R-B03	2	100	atm	1×10^3	103/55	-	-	-	1×10^4	60	-
IX-R-B04[b]	2	85	atm	1×10^3	100/65[c]	-	-	-	1×10^3	60	-
IX-R-B05[b]	2	100	atm	1×10^3	101/65	-	-	-	5×10^3	60	-
IX-R-B06[b]	2	100	atm	1×10^3	106/55	-	-	-	1×10^3	60	-
IX-R-B07	2	100	atm	1×10^3	124/55	-	-	-	1×10^3	60	-
IX-R-B08	2	100	atm	1×10^3	120/55	-	-	-	1×10^3	60	-
IX-R-B09	2	100	atm	1×10^3	105/55	-	-	-	1×10^4	60	-

TABLE 3.11.B.1-1 (SHEET 54 OF 90)
ENVIRONMENTAL CONDITIONS

Environmental Designator[a]	Unit	Normal			Abnormal/Test		DBA/Post-DBA			Relative Humidity (max)	
		Temp (°F)	Pressure	Int Dose (rads)	Temp (°F) (max/min)	Pressure	Temp (°F)[n]	Pressure[n]	Int Dose (rads)	Normal (%)	DBA (%)
CONTROL BUILDING - LEVEL B (Continued)											
IX-R-B71	1/com	100	atm	1×10^3	124/55	-	-	-	1×10^3	60	-
IX-R-B72	1/com	100	atm	1×10^3	120/65	-	-	-	1×10^3	60	-
IX-R-B73	1/com	100	atm	1×10^3	105/55	-	-	-	1×10^4	60	-
IX-R-B74H[m]	1/com	100	atm	1×10^3	107/50	atm	-	-	5×10^4	60	-
IX-R-B75	1/com	100	atm	1×10^3	101/65	-	-	-	5×10^3	60	-
IX-R-B76[b]	1/com	85	atm	1×10^3	86/65[c]	-	-	-	1×10^3	60	-
IX-R-B77	1/com	100	atm	1×10^3	103/55	atm	-	-	1×10^4	60	
IX-R-B78H[m]	1/com	100	atm	1×10^3	104/50	-	-	-	5×10^4	60	-
IX-R-B79[b]	1/com	85	atm	1×10^3	100/65	-	-	-	5×10^3	60	-
IX-R-B80	2	100	atm	1×10^3	120/55	-	-	-	5×10^3	60	-
IX-R-B81	1/com	100	atm	1×10^3	120/55	-	-	-	5×10^3	60	-
IX-R-B82	1/com	100	atm	1×10^3	120/55	-	-	-	1×10^3	60	-
IX-R-B83	1/com	100	atm	1×10^3	120/55	-	-	-	1×10^3	60	-
IX-R-B84[b]	1/com	85	atm	1×10^3	100/65	atm	-	-	1×10^3	60	-
IX-R-B85[b]	2	85	atm	1×10^3	100/65	atm	-	-	1×10^3	60	-
IX-R-B86	2	104	atm	1×10^3	120/55	-	-	-	1×10^3	60	-
IX-R-B87	2	104	atm	1×10^3	120/55	-	-	-	1×10^3	60	-
IX-R-B88	1/com	100	atm	1×10^3	106/50	-	-	-	1×10^3	60	-
IX-R-B89	2	100	atm	1×10^3	120/55	-	-	-	1×10^3	60	-
IX-R-B90	1/com	100	atm	1×10^3	120/55	-	-	-	1×10^3	60	-
IX-R-B91	1	100	atm	1×10^3	104/50	-	-	-	5×10^3	60	-
IX-R-B92	2	100	atm	1×10^3	104/50	-	-	-	5×10^3	60	-

TABLE 3.11.B.1-1 (SHEET 58 OF 90)
ENVIRONMENTAL CONDITIONS

Environmental Designator[a]	Unit	Normal			Abnormal/Test		DBA/Post-DBA			Relative Humidity (max)	
		Temp (°F)	Pressure	Int Dose (rads)	Temp (°F) (max/min)	Pressure	Temp (°F)[n]	Pressure[n]	Int Dose (rads)	Normal (%)	DBA (%)
CONTROL BUILDING - LEVEL A (Continued)											
IX-R-A66	1/com	100	atm	1×10^3	120/55	-	-	-	1×10^3	60	-
IX-R-A67	1/com	100	atm	1×10^3	120/55	-	-	-	1×10^3	60	-
IX-R-A68	1/com	100	atm	1×10^3	120/55	-	-	-	1×10^3	60	-
IX-R-A69	1/com	100	atm	1×10^3	120/55	-	-	-	1×10^3	60	-
IX-R-A70	1/com	104	atm	1×10^3	113/55	-	-	-	1×10^3	60	-
IX-R-A71	1/com	104	atm	1×10^3	120/55	-	-	-	1×10^3	60	-
IX-R-A72	2	104	atm	1×10^3	113/55	-	-	-	1×10^3	60	-
IX-R-A73	2	104	atm	1×10^3	120/55	-	-	-	1×10^3	60	-
IX-R-A74	1/com	100	atm	1×10^3	120/55	-	-	-	1×10^3	60	-
IX-R-A75[b]	1/com	75	atm	1×10^3	76/70	atm	-	-	1×10^3	60	-
IX-R-A76[b]	2	75	atm	1×10^3	80/70	atm	-	-	1×10^3	60	-
IX-R-A77[b]	1/com	85	atm	1×10^3	100/65	-	-	-	5×10^3	60	-
IX-R-A78	1/com	100	atm	1×10^3	120/55	-	-	-	1×10^4	60	-
IX-R-A79[b]	2	85	atm	1×10^3	100/65	-	-	-	5×10^3	60	-
IX-R-A80	2	100	atm	1×10^3	120/55	-	-	-	1×10^4	60	-
IX-R-A81[b]	2	100	atm	1×10^3	100/55	-	-	-	1×10^3	60	-
IX-R-A82[b]	1/com	100	atm	1×10^3	100/55	-	-	-	1×10^3	60	-
CONTROL BUILDING - LEVEL 1											
IX-R-101	2	100	atm	1×10^3	120/55	-	-	-	1×10^3	60	-
IX-R-102	1/com	100	atm	1×10^3	120/55	-	-	-	1×10^3	60	-

TABLE 3.11.B.1-1 (SHEET 61 OF 90)
ENVIRONMENTAL CONDITIONS

Environmental Designator[a]	Unit	Normal			Abnormal/Test		DBA/Post-DBA[c]			Relative Humidity (max)	
		Temp (°F)	Pressure	Int Dose (rads)	Temp (°F) (max/min)	Pressure	Temp (°F)[n]	Pressure[n]	Int Dose (rads)	Normal (%)	DBA (%)
CONTROL BUILDING - LEVEL 1 (Continued)											
IX-R-147	1/com	80	atm	1×10^3	87/55	-	-	-	1×10^3	60	-
IX-R-148	1/com	100	atm	1×10^3	120/55	-	-	-	1×10^3	60	-
IX-R-149	1/com	80	atm	1×10^3	87/55	-	-	-	1×10^3	60	-
IX-R-150	1/com	75	atm	1×10^3	104/60	-	-	-	1×10^3	60	-
IX-R-151	1/com	100	atm	1×10^3	120/55	-	-	-	1×10^3	60	-
IX-R-152	1/com	100	atm	1×10^3	120/55	-	-	-	1×10^3	60	-
IX-R-153	1/com	100	atm	1×10^3	120/55	-	-	-	1×10^3	60	-
IX-R-154	1/com	80	atm	1×10^3	104/55	-	-	-	1×10^3	60	-
IX-R-155	1/com	75	atm	1×10^3	104/60	-	-	-	1×10^3	60	-
IX-R-156[b]	1/com	85	+1/8" WG	1×10^3	85/60	atm[k]	85	(k)	1×10^3	60	-
IX-R-157[b]	1/com	85	+1/8" WG	1×10^3	85/70	atm[k]	85	-	1×10^3	60	-
IX-R-158[b]	1/com	85	+1/8" WG	1×10^3	85/70	atm[k]	85	-	1×10^3	60	-
IX-R-159	1/com	80	atm	1×10^3	104/55	atm	-	-	1×10^3	60	-
IX-R-160[b]	1/com	85	+1/8" WG	1×10^3	93/70	atm[k]	93	(k)	1×10^3	60	-
IX-R-161[b]	1/com	85	+1/8" WG	1×10^3	85/70	atm[k]	85	(k)	1×10^3	60	-
IX-R-162[b]	1/com	85	+1/8" WG	1×10^3	85/70	atm[k]	85	(k)	1×10^3	60	-
IX-R-163[b]	1/com	85	+1/8" WG	1×10^3	85/70[j]	atm[k]	85	(k)	1×10^3	50	-
IX-R-164[b]	2	85	+1/8" WG	1×10^3	85/70[j]	atm[k]	85	(k)	1×10^3	50	-
IX-R-165	1/com	100	atm	1×10^3	120/55	-	-	-	1×10^3	60	-
IX-R-166	1/com	100	atm	1×10^3	120/55	-	-	-	1×10^3	60	-
IX-R-167	1/com	100	atm	1×10^3	120/55	-	-	-	1×10^3	60	-

TABLE 3.11.B.1-1 (SHEET 66 OF 90)
ENVIRONMENTAL CONDITIONS

Environmental Designator[a]	Unit	Normal			Abnormal/Test		DBA/Post-DBA			Relative Humidity (max)	
		Temp (°F)	Pressure	Int Dose (rads)	Temp (°F) (max/min)	Pressure	Temp (°F)[n]	Pressure[n]	Int Dose (rads)	Normal (%)	DBA (%)
CONTROL BUILDING - LEVEL 2 (Continued)											
IX-R-252	1/com	100	atm	1×10^3	120/55	-	-	-	1×10^3	60	-
IX-R-253	1/com	100	atm	1×10^3	120/55	-	-	-	1×10^3	60	-
IX-R-254	1/com	100	atm	1×10^3	120/55	-	-	-	1×10^3	60	-
IX-R-255	1/com	100	atm	1×10^3	120/55	-	-	-	1×10^3	60	-
IX-R-256	spare										
IX-R-257	1/com	100	atm	1×10^3	120/55	-	-	-	1×10^3	60	-
IX-R-258	2	100	atm	1×10^3	120/55	-	-	-	1×10^3	60	-
IX-R-259	2	100	atm	1×10^3	120/55	-	-	-	1×10^3	60	-
IX-R-260	spare										
IX-R-261	spare										
IX-R-262	spare										
IX-R-263	2	100	atm	1×10^3	120/55	-	-	-	1×10^3	60	-
IX-R-264	2	80	atm	1×10^3	90/65	-	-	-	1×10^3	60	-
IX-R-265	spare										
IX-R-266	1/com	75	atm	1×10^3	104/60	-	-	-	1×10^3	60	-
IX-R-267	1/com	75	atm	1×10^3	104/55	-	-	-	1×10^3	60	-
IX-R-268	1/com	75	atm	1×10^3	104/60	-	-	-	1×10^3	60	-
IX-R-269	2	80	atm	1×10^3	104/55	-	-	-	1×10^3	60	-
IX-R-270	2	100	atm	1×10^3	120/55	-	-	-	1×10^3	60	-
IX-R-271	1/com	100	atm	1×10^3	120/55	-	-	-	1×10^3	60	-
IX-R-272	2	100	atm	1×10^3	120/55	-	-	-	1×10^3	60	-
IX-R-273	1/com	100	atm	1×10^3	120/55	-	-		1×10^3	60	-

TABLE 3.11.B.1-1 (SHEET 68 OF 90)
ENVIRONMENTAL CONDITIONS

Environmental Designator[a]	Unit	Normal			Abnormal/Test		DBA/Post-DBA			Relative Humidity (max)	
		Temp (°F)	Pressure	Int Dose (rads)	Temp (°F) (max/min)	Pressure	Temp (°F)[n]	Pressure[n]	Int Dose (rads)	Normal (%)	DBA (%)
CONTROL BUILDING - LEVEL 3 (Continued)											
IX-R-318	spare										
IX-R-319	1/com	100	atm	1×10^3	120/55	-	-	-	1×10^3	60	-
IX-R-320[b]	1/com	104	atm	1×10^3	110/65	-	-	-	1×10^3	60	-
IX-R-321[b]	1/com	104	atm	1×10^3	110/65	-	-	-	1×10^3	60	-
IX-R-322[b]	1/com	100	atm	1×10^3	100/55	-	-	-	1×10^3	60	-
IX-R-323	1/com	100	atm	1×10^3	120/55	-	-	-	1×10^3	60	-
IX-R-324	1/com	100	atm	1×10^3	120/55	-	-	-	1×10^3	60	-
IX-R-325[b]	1/com	100	atm	1×10^3	118/55	-	-	-	1×10^3	60	-
IX-R-326	spare										
IX-R-327	spare										
IX-R-328	1/com	100	atm	1×10^3	120/40	-	-	-	1×10^3	100	-
IX-R-329	1/com	100	atm	1×10^3	120/40	-	-	-	1×10^3	60	-
IX-R-330	1/com	100	atm	1×10^3	120/40	-	-	-	1×10^3	60	-
CONTROL BUILDING - LEVEL 4											
IX-R-401	2	100	atm	1×10^3	120/40	11.7 psia	-	-	1×10^3	60	-
IX-R-402	2	100	atm	1×10^3	120/40	11.7 psia	-	-	1×10^3	60	-
IX-R-403	1/com	100	atm	1×10^3	120/55	11.7 psia	-	-	1×10^3	60	-
IX-R-404	1/com	100	atm	1×10^3	120/40	11.7 psia	-	-	1×10^3	60	-
IX-R-405	1/com	100	atm	1×10^3	120/40	11.7 psia	-	-	1×10^3	60	-
IX-R-406	1/com	80	atm	1×10^3	104/60	11.7 psia	-	-	1×10^3	60	-

TABLE 3.11.B.1-1 (SHEET 87 OF 90)
ENVIRONMENTAL CONDITIONS

Environmental Designator[a]	Unit	Normal			Abnormal/Test		DBA/Post-DBA			Relative Humidity (max)	
		Temp (°F)	Pressure	Int Dose (rads)	Temp (°F) (max/min)	Pressure	Temp (°F)[f]	Pressure[f]	Int Dose (rads)	Normal (%)	DBA (%)
OUTSIDE AREAS - MAIN STEAM TUNNELS											
III-1T1H	1/com	amb	atm	1×10^3	-	11.7 psia	370[d]	56 psia[e]	1×10^3	-	100
III-2T1H	2	amb	atm	1×10^3	-	11.7 psia	370[d]	56 psia[e]	1×10^3	-	100
OUTSIDE AREAS - NSCW PIPING TUNNELS											
III-1T2A	1/com	amb	atm	1×10^3	-	11.7 psia	-	-	1×10^3	-	-
III-1T2B	1/com	amb	atm	1×10^3	-	11.7 psia	-	-	1×10^3	-	-
III-2T2A	2	amb[c]	atm	1×10^3	-	11.7 psia	-	-	1×10^3	-	-
III-2T2B	2	amb[c]	atm	1×10^3	-	11.7 psia	-	-	1×10^3	-	-
OUTSIDE AREAS - DIESEL GENERATOR COOLING TUNNEL											
III-1T3A	1/com	amb	atm	1×10^3	-	11.7 psia	-	-	1×10^3	-	-
III-1T3B	1/com	amb	atm	1×10^3	-	11.7 psia	-	-	1×10^3	-	-
III-2T3A	2	amb[c]	atm	1×10^3	-	11.7 psia	-	-	1×10^3	-	-
III-2T3B	2	amb[c]	atm	1×10^3	-	11.7 psia	-	-	1×10^3	-	-
OUTSIDE AREAS - DIESEL GENERATOR ELECTRICAL TUNNELS											
III-1T4A[b]	1/com	amb[c]	atm	1×10^3	104/40	11.7 psia	-	-	1×10^3	-	-
III-1T4B[b]	1/com	amb[c]	atm	1×10^3	104/40	11.7 psia	-	-	1×10^3	-	-
III-2T4A[b]	2	amb[c]	atm	1×10^3	104/40	11.7 psia	-	-	1×10^3	-	-
III-2T4B[b]	2	amb[c]	atm	1×10^3	104/40	11.7 psia	-	-	1×10^3	-	-
III-1TBA	1/com	amb	atm	1×10^3	-	11.7 psia	-	-	1×10^3	-	-
III-1TBBH	1/com	amb	atm	1×10^3	-	11.7 psia	Sheet 2	Sheet 6/A	1×10^3	-	100

TABLE 3.11.B.1-1 (SHEET 88 OF 90)
ENVIRONMENTAL CONDITIONS

Environmental Designator[a]	Unit	Normal			Abnormal/Test		DBA/Post-DBA			Relative Humidity (max)	
		Temp (°F)	Pressure	Int Dose (rads)	Temp (°F) (max/min)	Pressure	Temp (°F)	Pressure	Int Dose (rads)	Normal (%)	DBA (%)
OUTSIDE AREAS - NSCW TOWER CABLE TUNNELS											
III-1T5A[b]	1/com	amb	atm	1×10^3	104/40	11.7 psia	-	-	1×10^3	-	-
III-1T5B[b]	1/com	amb	atm	1×10^3	104/40	11.7 psia	-	-	1×10^3	-	-
III-2T5A[b]	2	amb	atm	1×10^3	-	11.7 psia	-	-	1×10^3	-	-
III-2T5B[b]	2	amb	atm	1×10^3	-	11.7 psia	-	-	1×10^3	-	-
OUTSIDE AREAS - AUXILIARY FEEDWATER TUNNELS											
III-1T6AH	1/com	amb	atm	1×10^3	-	11.7 psia	304[d]	31.0 psia[e]	1×10^3	-	-
III-1T6BH	1/com	amb	atm	1×10^3	-	11.7 psia	326[d]	37.0 psia[e]	1×10^3	-	-
III-2T6AH	2	amb	atm	1×10^3	-	11.7 psia	304[d]	31.0 psia[e]	1×10^3	-	-
III-2T6BH	2	amb	atm	1×10^3	-	11.7 psia	326[d]	37.0 psia[e]	1×10^3	-	-
OUTSIDE AREAS - RWST AND RHWST TUNNELS											
III-RST	1/com	amb	atm	1×10^3	104/40	11.7 psia	-	-	1×10^3	-	-
III-RST	2	amb	atm	1×10^3	104/40	11.7 psia	-	-	1×10^3	-	-
OUTSIDE AREAS - ELECTRIC STEAM BOILER TUNNEL											
III-ESBT	1/com	amb	atm	1×10^3	-	11.7 psia	-	-	1×10^3	-	-
OUTSIDE AREAS - REACTOR MAKEUP WATER STORAGE TANK											
III-R-101	1/com	amb	atm	1×10^3	atm	11.7 psia	-	-	1×10^3	-	-
III-R-101	2	amb[c]	atm	1×10^3	atm	11.7 psia	-	-	1×10^3	-	-

additionally, to cool down the reactor at a rate of up to 100°F/h not to exceed 100°F in any 1 hour period. The turbine-driven pump provides system diversity to both motor-driven pumps.

The results of the pressure/temperature analysis for the Unit 1 turbine-driven AFW pump room, as shown in table 3F-2, indicate that the maximum differential pressure on the walls will be less than 1.0 psi. The walls are capable of withstanding this pressure.

Analysis of AFW piping failures shows that loss of a redundant train does not prevent decay heat removal. The capability to provide adequate feedwater flow to remove decay heat is ensured by operation of either one of two motor-driven pumps or by operation of the turbine-driven pump.

Pressure-temperature response analysis for design basis main steam and main feedwater pipe breaks in the main steam tunnel has been performed. Design basis pipe breaks and locations are selected to identify maximum tunnel pressures to be accommodated by the AFW structure adjacent to the main steam tunnel.

Similarly, flooding caused by piping failures will not cause a loss of function of the AFW system because separation is provided between all three AFW pump rooms.

Watertight seals between these rooms prevent propagation of flooding and ensure that adequate capacity of the AFW system is maintained.

Analysis of the other hazards shows that adequate redundancy and separation are provided to ensure the operability of at least one train of the AFW system.

3F.4.2 MAIN STEAM ISOLATION VALVE (MSIV) AND MAIN FEEDWATER ISOLATION VALVE (MFIV) COMPARTMENT

The MSIV/MFIV compartment is located in the wing areas of the auxiliary building and the control building. Drawings 1X6DD301, 1X6DD302, AX6DD300, AX6DD301, and AX6DD302 provide plan and elevation views of this area. The main steam and main feedwater piping in this area consists of straight piping runs extending from the containment penetrations to torsional restraints mounted in the auxiliary building and control building walls through which these lines enter the main steam tunnel. The MSIVs, main steam safety valves, atmospheric relief valves, and

MFIVs are in this compartment. Also in the compartment are branch piping lines of the AFW system, chemical addition system, steam supply to the turbine-driven AFW pump, bypass loops of the MSIVs, pressure instrumentation, and drains.

3F.4.2.1 Break Size and Location

Main steam and feedwater piping in this compartment is designed to the criteria stated in paragraph 3.6.2.1 for those portions of the piping passing through the primary containment and extending to the first pipe whip restraint past the first outside isolation valve. In accordance with these criteria, no specific pipe breaks are postulated in the main run of these lines in the MSIV/MFIV compartment. However, to provide an additional level of assurance of operability of safety-related equipment in this compartment, the building structure and safety-related equipment are designed for the environmental conditions (pressure, temperature, and flooding) that would result from a break, equal in area to one cross-sectional pipe area, of either a main steam line or main feedwater line without steam generator tube bundle being uncovered. Main steam line breaks up to 1.0 ft^2 with steam generator tube bundle being uncovered have been considered for equipment qualification as discussed in paragraph 3.11.B.1.1.

Pressurization of the MSIV/MFIV compartment due to such a rupture is limited by providing adequate venting of the compartment and designing the compartment to withstand the maximum resultant pressure. Venting is accomplished by including adequate passageways between compartments or by other acceptable venting schemes. Engineered safety features required to bring the reactor to safe shutdown, which are located within these compartments, are designed to withstand the associated temperature, pressure, and humidity conditions.

The following cases are analyzed to determine the worst environmental conditions for the MSIV/MFIV compartment:

A. Case 1: Blowdown from a main steam line break (MSLB) equivalent to the flow area of a single area rupture (0.9 ft^2). This case results in the maximum compartment temperature.

B. Case 2: Blowdown from a main feedwater line break equivalent to the flow area of a single area rupture (1.4 ft^2). This case results in the maximum compartment flood level.

TABLE 3F-1 (SHEET 84 OF 84)

Rooms: R-C60; R-C106; R-C110; R-C125; R-C130

Effects analysis:

Pressure/temperature - There are no high-energy line breaks located in the above rooms. As the above rooms do not have high-energy line breaks and are not break nodes, they are included as a flowpath in the nodal model used in the pressure/temperature analysis of the steam generator blowdown system.

The above rooms are affected by pressure/temperature analysis.

Equipment is designed to withstand the effects of pressure, temperature, and humidity. For the pressure/temperature/humidity data, see table 3.11.B.1-1.

Structures are designed to withstand the short-term pressure/ temperature effects of high-energy line breaks.

4.0 REACTOR

4.1 SUMMARY DESCRIPTION

This chapter describes:

A. The mechanical components of the reactor and reactor core, including the fuel rods and fuel assemblies.

B. The nuclear design.

C. The thermal-hydraulic design.

The initial reactor core is composed of an array of fuel assemblies that are identical in mechanical design but different in fuel enrichment. Within each fuel assembly all rods are of the same enrichment. Three different enrichments are employed in the first core: 2.10 (region 1), 2.60 (region 2), and 3.10 (region 3) weight percents. It was required that the initial core loading maximum enrichment not exceed 3.2 weight percent U-235. For subsequent reloads, the target maximum enrichment is up to 5.0 weight percent. Reload fuel shall be similar in physical design to the initial core loading and shall have a maximum enrichment not to exceed 5.0 weight percent U-235.

Reload cores are comprised of 17 x 17 LOPAR and/or VANTAGE 5 fuel assemblies. The referenced design described herein consists of irradiated LOPAR fuel assemblies arranged in a checkered, low-leakage core loading pattern.

The significant new mechanical design features of the VANTAGE 5 design, as described in reference 1, relative to the LOPAR fuel design include the following: integral fuel burnable absorbers (IFBA), intermediate flow mixer (IFM) grids, reconstitutable top nozzle (RTN), extended burnup capability, and axial blankets. In addition, a debris filter bottom nozzle (DFBN) replacing the standard nozzle has been implemented. The RTN, DFBN, and extended burnup capability have been introduced previously in both VEGP Units 1 and 2. Recent fuel reloads contain an advanced zirconium alloy clad fuel known as ZIRLO™, reference 2, and improved design features including:

- Protective bottom grid,
- Long fuel rod end plugs,
- Annular blanket pellets,

REV 9 5/00
REV 8 10/98
REV 7 9/97
REV 6 4/97
REV 4 4/94
REV 3 12/92

- ZIRLO™ guide thimbles,
- Instrumentation tube,
- Mid grid, and
- IFM grid.

A fuel assembly is composed of 264 fuel rods in a 17 x 17 square array. The center position in the fuel assembly is reserved for incore instrumentation. The remaining 24 positions in the fuel assembly have guide thimbles which are joined to the top and bottom nozzles of the fuel assembly and serve to support the fuel grids. A fuel assembly may have limited substitution of zirconium alloy or stainless steel filler rods in place of fuel rods, in accordance with NRC approved applications of fuel rod configurations. The fuel grids consist of an egg crate arrangement of interlocked straps that maintain lateral spacing between the rods. The grid straps have spring fingers and dimples which grip and support the fuel rods. The middle grids also have coolant-mixing vanes. The flow mixer grid straps contain only support dimples and coolant mixing vanes.

The fuel rods consist of enriched uranium, in the form of cylindrical pellets of uranium dioxide, contained in Zircaloy-4 tubing. Commencing with Unit 2 Cycle 6, the fresh fuel region uses an advanced zirconium alloy tubing known as ZIRLO™ to provide improved fuel performance, reference 2. The tubing is plugged and seal welded at the ends to encapsulate the fuel. An axial blanket of natural, mid-enriched, or fully enriched solid or annular UO_2 fuel pellets may be placed at the ends of the enriched fuel pellet stack. The natural or mid-enriched axial blanket pellets are used to reduce the neutron leakage and to improve fuel utilization. The annular blanket pellets are used to increase the void volume for gas accommodation within the fuel rod. A second fuel rod type is utilized to varying degrees within some fuel assemblies. These rods use zirc diboride (ZrB_2) coated fuel pellets in the central portion of the fuel stack. All fuel rods are pressurized internally with helium during fabrication to reduce clad creep-down during operation and thereby to increase fatigue life.

Depending on the position of the assembly in the core, the guide thimbles are used for rod cluster control assemblies (RCCAs), neutron source assemblies, burnable absorber (BA) assemblies, or stainless steel rod insert assemblies (SSRIA). If none of these is required, the guide thimbles may be fitted with plugging devices to limit bypass flow. Standard borosilicate glass rods were used in first cycles. Wet annular burnable absorbers (WABA) and/or IFBA coated fuel pellets are used in subsequent reloads.

TABLE 4.1-1 (SHEET 2 OF 4)

Thermal and Hydraulic Design Parameters		VEGP (ORIGINAL DESIGN)	VEGP (UPRATE DESIGN)[h]	SNUPPS
Heat transfer				
18. Active heat transfer surface area, (ft^2)	(LOPAR) (VANTAGE 5)	59,700	59,742 [g] 57,505 [g]	59,700
19. Average heat flux (Btu/h-ft^2)	(LOPAR) (VANTAGE 5)	189,800	198,370 [g] 206,085 [g]	189,800
20. Maximum heat flux for normal operation (Btu/h-ft^2)	(LOPAR) (VANTAGE 5)	436,500[a]	495,925 [a,g] 515,213 [a,g]	440,300[a]
21. Average linear power (kW/ft)		5.44	5.69[i]	5.44
22. Peak linear power for normal operation (kW/ft) [a]		12.5	14.2[i]	12.6
23. Peak linear power resulting from overpower transients/operator errors, assuming a maximum overpower of 118% (kW/ft)		18.0	22.4[b]	18.0
24. Heat flux hot channel factor (F_Q)		2.30[c]	2.50[c]	2.32[c]
25. Peak fuel central temperature for prevention of centerline melt (°F)		4700	4700	4700
26. Design		RCC canless	RCC canless	RCC canless
27. Number of fuel assemblies		17 x 17	17 x 17	17 x 17
28. UO_2 rods per assembly		193	193	193
29. Rod pitch (in.)		264	264	264
30. Overall dimensions (in.)		0.496	0.496	0.496
31. Fuel weight, as UO_2 (lb)		8.426 x 8.426	8.426 x 8.426	8.426 x 8.426
32. Zircaloy/ZIRLO™ weight (lb) (active core)	(LOPAR) (VANTAGE 5)	222,739	222,762 204,231[j]	222,739
33. Number of grids per assembly	(LOPAR) (VANTAGE 5)	45,296	45,296 45,914	45,296
	(LOPAR) (VANTAGE 5)	8 - R type	8 - R type 2 - R type 6 - Z type 3 - IFM 1-P-Grid	8 - R type
34. Loading technique (first cycle)		3 region nonuniform	N/A	3 region nonuniform
Fuel rods				
35. Number		50,952	50,952	50,952
36. Outside diameter (in.)	(LOPAR) (VANTAGE 5)	0.374	0.374 0.360	0.374
37. Diametral gap (in.)	(LOPAR) (VANTAGE 5)	0.0065	0.0065 0.0062 (non-IFBA)	0.0065
38. Clad thickness (in.)		0.0225	0.0225	0.0225
39. Clad material	(LOPAR) (VANTAGE 5)	Zircaloy-4	Zircaloy-4 Zircaloy-4/ZIRLO™	Zircaloy-4

TABLE 4.1-1 (SHEET 3 OF 4)

Thermal and Hydraulic Design Parameters		VEGP (ORIGINAL DESIGN)	VEGP (UPRATE DESIGN)[h]	SNUPPS
Fuel pellets				
40. Material		UO_2 sintered	UO_2 sintered	UO_2 sintered
41. Density (% of theoretical)		95	95	95
42. Diameter (in.)	(LOPAR)	0.3225	0.3225	0.3225
	(VANTAGE 5)		0.3088 (non-IFBA)	
43. Length (in.)	(LOPAR)	0.530	0.387 or 0.530	0.530
	(VANTAGE 5)		0.370/0.462 (blanket pellet)	
Rod cluster control assemblies				
44. Neutron absorber		Ag-In-Cd or hafnium	Ag-In-Cd or hafnium	Ag-In-Cd
45. Cladding material		Type 304 SS, cold-worked	Type 304 SS, cold-worked	Type 304 SS, cold-worked
46. Clad thickness Ad-In-Cd or hafnium		0.0185	0.0185	0.0185
47. Number of clusters		53	53	53
48. Number of absorber rods per cluster		24	24	24
Core structure				
49. Core barrel, ID/OD (in.)		148.0/152.5	148.0/152.5	148.0/152.5
50. Thermal shield		Neutron panel design	Neutron panel design	Neutron panel design
51. Baffle thickness (in.)		0.88	0.88	0.88
Structure characteristics				
52. Core diameter, equivalent (in.)		132.7	132.7	132.7
53. Core height, active fuel (in.)		143.7	143.7	143.7
Reflector thickness and composition				
54. Top, water plus steel (in.)		10	10	10
55. Bottom, water plus steel (in.)		10	10	10
56. Side, water plus steel (in.)		15	15	15
57. H_2O/U molecular ratio core, lattice, cold	(LOPAR)	2.41	2.41	2.41
	(VANTAGE 5)		2.73	

TABLE 4.1-1 (SHEET 4 OF 4)

First Cycle Fuel Enrichments (Weight Percent)	VEGP (ORIGINAL DESIGN)	VEGP (UPRATE DESIGN)[h]	SNUPPS	
	Units 1 and 2		Core A	Core B
58. Region 1	2.10	N/A	2.10	1.40
59. Region 2	2.60	N/A	2.60	2.60
60. Region 3	3.10	N/A	3.10	2.90

a. This limit is associated with the values F_Q = 2.32 for SNUPPS, F_Q = 2.30 for VEGP (Original Design) and F_Q = 2.50 for VEGP (Uprate Design).

b. See paragraph 4.3.2.2.6.

c. This is the maximum value of F_Q for normal operation.

d. See paragraph 4.4.1.1.2 for the use of the W-3 correlation.

e. Flowrates are based on 10% steam generator tube plugging for VEGP (Uprate Design) and 0% plugging for VEGP (Original Design) and SNUPPS.

f. Inlet temperature = 557.4°F.

g. Assumes all LOPAR or VANTAGE 5 core.

h. The VEGP power uprate increases the licensed reactor core power level from 3411 MWt to 3565 MWt.

i. Based on densified active fuel length.

j. The decrease in fuel weight due to annular axial blanket pellets is not considered.

4.2.2.2.2 Top Nozzle

Standard Top Nozzle

The standard top nozzle functions as the upper structural element of the fuel assembly in addition to providing a partial protective housing for the RCCA or other components. The top nozzle consists of an adapter plate, enclosure, top plate, and pads. Holddown springs are mounted on the assembly, as shown in figure 4.2-2. The springs and bolts are made of Inconel-718, and -600, respectively; other components are made of type 304 stainless steel.

The adapter plate is provided with round penetrations and semicircular-ended slots to permit the flow of coolant upward through the top nozzle. Other round holes are provided to accept sleeves which are welded to the adapter plate and mechanically attached to the thimble tubes. The ligaments in the plate cover the tops of the fuel rods and prevent their upward ejection from the fuel assembly. The enclosure is a box-like structure which sets the distance between the adapter plate and the top plate. The top plate has a large hole in the center to permit access for the control rods and the control rod spiders. Holddown springs are mounted on the top plate and are fastened in place by bolts and clamps located at two diagonally opposite corners. Integral pads which contain alignment holes for locating the upper end of the fuel assembly are positioned on the other two corners.

A composite (cast) top nozzle was introduced in Unit 1 Cycle 8 and in Unit 2 Cycle 7, and replaces the integral welded assembly. This design change for manufacturing process improvement reduces the total number of components required to fabricate and assemble the top nozzle.

Reconstitutable Top Nozzle

A reconstitutable top nozzle (RTN) design feature is used in reload cycles.

The RTN design differs from the above standard nozzle design in the following ways. A groove is provided in each thimble thru-hole in the nozzle plate to facilitate attachment and removal. Round holes in the adapter plate are provided to accept nozzle inserts which are locked into the grooves in the adapter plate using lock tubes and mechanically attached to the thimble tubes at the lower ends of the inserts (figure 4.2-5). The nozzle plate thickness is reduced to provide additional axial space for fuel rod growth. Holddown springs are mounted on the top plate and are fastened in place by spring screws.

To remove the RTN, a tool is first inserted through a lock tube (figure 4.2-5) and expanded radially to engage the bottom edge of the tube. An axial force is then exerted on the tool which overrides local lock tube deformations and withdraws the lock tube from the nozzle insert. After the lock tubes have been withdrawn, the RTN is removed by raising it off the upper slotted ends of the nozzle inserts, which deflect inwardly under the axial lift load.

With the RTN removed, direct access is provided for fuel rod examination or replacement. Reconstitution is completed by the remounting of the RTN and the insertion of lock tubes. Additional details of this design feature, the design bases, and evaluation of the RTN are given in subsection 2.3.2 in reference 21.

A replacement reconstitutable top nozzle (RRTN) design may be used in a reload cycle to replace the original reconstitutable top nozzle (RTN) on an irradiated fuel assembly. The mechanical features of the RRTN are the same as those for the RTN (see figure 4.2-5) with some minor dimensional differences in the top nozzle adapter plate thimble hole to facilitate attachment to an irradiated fuel assembly.

A composite (cast) top nozzle was introduced in Unit 1 Cycle 8 and in Unit 2 Cycle 7, and replaced the integral welded assembly. This design change, for manufacturing process improvement, reduces the total number of components required to fabricate and assemble the top nozzle.

4.2.2.2.3 Guide Thimbles and Instrument Tube

The guide thimbles are structural members which also provide channels for the neutron absorber rods, BA rods, neutron source, or thimble plug assemblies. With the exception of a reduction in the guide thimble diameter and length above the dashpot, the VANTAGE 5 guide thimbles are identical to those in the LOPAR design. A reduction to the guide thimble outside diameter and inside diameter is required due to the thicker Zircaloy grid straps and reduced cell size. The VANTAGE 5 thimble tube is shorter than the LOPAR thimble tube due to the RTN and nozzle insert features. Each thimble is fabricated from Zircaloy-4/ ZIRLO™ tubing having two different diameters. The tube diameter at the top section provides the annular area necessary to permit rapid control rod insertion during a reactor trip. Holes are provided on the thimble tube above the dashpot to reduce the rod drop time. The lower portion of the guide thimble is swaged to a smaller diameter to reduce diametral clearances and produce a dashpot action near the end of the control rod travel during normal trip operation. The dashpot is closed at the bottom by

means of an end plug, which is provided with a small flow port to avoid fluid stagnation in the dashpot volume during normal operation. The top end of the guide thimble is fastened to a tubular sleeve by three expansion swages on the standard top nozzle. The sleeve fits into and is welded to the standard top nozzle adapter plate. The top end of the guide thimble is fastened to a nozzle insert by three expansion swages. The nozzle insert fits into and is locked into the RTN adapter plate using a lock tube. The lower end of the guide thimble is fitted with an end plug, which is captured by the bottom grid insert and then fastened to the bottom nozzle by a crimp locked thimble screw.

Fuel rod support grids are fastened to the guide thimble assemblies to create an integrated structure. Since welding of the grids to the thimbles is not possible, the fastening technique depicted in figures 4.2-4 and 4.2-5 is used for all but the bottom grid in a fuel assembly.

An expanding tool is inserted into the inner diameter of the Zircaloy/ZIRLO™ thimble tube at the elevation of the grid sleeves that have been previously attached to the grid assembly. The four-lobed tool forces the thimble and sleeve outward to a predetermined diameter, thus joining the two components.

The top grid-to-thimble attachment is shown in figure 4.2-5 for the standard top nozzle design. The stainless steel sleeves are brazed into the Inconel grid assembly. The Zircaloy/ZIRLO™ guide thimbles are fastened to the long sleeves by expanding the two members as shown in figures 4.2-4 and 4.2-6. Finally, the top ends of the sleeves are welded to the top nozzle adapter plate as shown in figure 4.2-5.

In assemblies with reconstitutable top nozzles, the guide thimbles are fastened inside the top grid sleeves and nozzle inserts as shown in figure 4.2-5. A bulge in the nozzle insert is then captured in a corresponding groove in the hole in the top nozzle plate. The insert is fixed in place by the insertion of a lock tube into the insert, thus providing a mechanical connection between the guide thimble and the top nozzle.

The top inconel grid sleeve, top nozzle insert, and thimble of the VANTAGE 5 design are joined together using three bulge joint mechanical attachments as shown in figure 4.2-5. This bulge joint connection was mechanically tested and found to meet all applicable design criteria.

The intermediate mixing vane and intermediate flow mixer Zircaloy/ZIRLO™ grids employ a single bulge connection to the sleeve and thimble as compared to a three bulge connection used in the top inconel grid (figure 4.2-6). Mechanical testing of this bulge joint connection was also found to be acceptable.

The bottom grid assembly is joined to the assembly as shown in figure 4.2-7. The stainless steel insert is spotwelded to the bottom grid and later captured between the guide thimble end plug and the bottom nozzle by means of a stainless steel thimble screw.

The described methods of grid fastening are standard and have been used successfully since the introduction of Zircaloy guide thimbles in 1969.

The central instrumentation tube of each fuel assembly is constrained by seating in a counterbore in the bottom nozzle at its lower end and is attached to the top and midgrid in the same manner as above for the guide thimbles. This tube has a constant diameter and guides the incore neutron detectors. The VANTAGE 5 instrumentation tube also has a reduction in diameter when compared to the LOPAR assembly instrumentation tube. This decrease still allows sufficient diametral clearance for the flux thimble to traverse the tube without binding.

4.2.2.2.4 Grid Assemblies

The fuel rods, as shown in figure 4.2-2, are supported at intervals along their length by grid assemblies which maintain the lateral spacing between the rods. Each fuel rod is supported within each grid by the combination of support dimples and springs. The grid assembly consists of individual slotted straps assembled and interlocked into an egg crate arrangement with the straps permanently joined at their points of intersection.

Two types of grid assemblies are used in each fuel assembly. One type, with mixing vanes projecting from the edges of the straps into the coolant stream, is used in the high heat flux region of the fuel assemblies to promote mixing of the coolant. The other type, located at the ends of the assembly, does not contain mixing vanes on the internal straps. The outside straps on all grids contain mixing vanes which, in addition to their mixing function, aid in guiding the grids and fuel assemblies past projecting surfaces during handling or during loading and unloading of the core.

The top and bottom Inconel-718 (nonmixing vane) grids of the VANTAGE 5 fuel assemblies are similar in design to the Inconel grids of the Cycle 1, LOPAR fuel assemblies for VEGP Units 1 and 2. The six intermediate (mixing vane) grids on the VANTAGE 5 design are made of Zircaloy/ZIRLO™ material rather than the intermediate Inconel (mixing vane) grids which are currently used in the LOPAR design. Beginning with Unit 1 Cycle 8 and Unit 2 Cycle 7, the intermediate grids and intermediate flow mixer (IFM) grids are made of ZIRLO™ material.

The Zircaloy/ZIRLO™ grids have thicker straps than the Inconel. Also, the Zircaloy/ZIRLO™ grid height is higher compared to the Inconel midgrid. These dimensional changes were made to compensate for differences in material strength properties. The Zircaloy/ZIRLO™ grid incorporates the same grid cell support configuration as the Inconel grid. The Zircaloy/ZIRLO™ interlocking strap joints and grid/sleeve joints are fabricated by laser welding, whereas the Inconel grid joints are brazed.

The VANTAGE 5 IFM grids shown on figure 4.2-2 are located in the three uppermost spans between the Zircaloy/ZIRLO™ mixing vane structural grids and incorporate a similar mixing vane array. Their prime function is midspan flow mixing in the hottest fuel assembly spans. Each IFM grid cell contains four dimples which are designed to prevent midspan channel closure in the spans containing IFMs and fuel rod contact with the mixing vanes. This simplified cell arrangement allows short grid cells so that the IFM grid can accomplish its flow mixing objective with minimal pressure drop.

The IFM grids, like the VANTAGE 5 mixing vane grids, are fabricated from Zircaloy/ZIRLO™. This material was selected to take advantage of the material's inherent low neutron capture cross-section. The Zircaloy/ZIRLO™ grid straps are manufactured using the same basic techniques as the Zircaloy/ZIRLO™ grid assemblies used for the Westinghouse optimized fuel assembly (OFA) design and are joined to the guide thimbles via sleeves which are welded at the bottom of appropriate grid cells.

The IFM grids are not intended to be structural members. The outer strap configuration was to be similar to current fuel designs to preclude grid hang-up and damage during fuel handling. Additionally, the grid envelope is smaller which further minimizes the potential for damage and reduces calculated forces during seismic/LOCA events. A coolable geometry is assured at the IFM grid elevation, as well as at the structural grid elevation.

Commencing with the fresh feed fuel assemblies for Unit 2 Cycle 7 and Unit 1 Cycle 8, the fuel will incorporate a bottom protective grid and modifications to the top and bottom fuel rod end plug. The protective grid illustrated in figure 4.2-2 is a partial height grid, similar in configuration to the intermediate flow mixing grid, fabricated of Inconel without mixing vanes, and positioned on the top plate of the bottom nozzle. In conjunction with the protective grid, both the bottom and top fuel rod end plugs were elongated. The protective grid and elongated bottom end plug together provide a zone below the active fuel in which debris can be entrapped.

4.2.2.3 Incore Control Components

Reactivity control is provided by neutron absorbing rods and a soluble chemical neutron absorber (boric acid). The boric acid concentration is varied to control long-term reactivity changes such as:

A. Fuel depletion and fission product buildup.

B. Cold to hot, zero power reactivity changes.

C. Reactivity change produced by intermediate-term fission products such as xenon and samarium.

D. Burnable poison depletion.

The chemical and volume control system (CVCS) is discussed in chapter 9.

The RCCAs provide reactivity control for:

A. Shutdown.

B. Reactivity changes due to coolant temperature changes in the power range.

C. Reactivity changes associated with the power coefficient of reactivity.

D. Reactivity changes due to void formation.

It is necessary to maintain a negative power coefficient at hot full power conditions throughout the entire cycle to reduce possible deleterious effects caused by a positive coefficient during loss-of-coolant or loss-of-flow accidents. The first fuel cycle contains more excess reactivity than subsequent cycles due to the loading of all fresh (unburned) fuel. Since soluble boron alone is insufficient to ensure a negative moderator coefficient, BA assemblies are also used.

The RCCAs and their control rod drive mechanisms (CRDMs) are the only moving parts in the reactor. Figure 4.2-8 illustrates the rod cluster control (RCC) and CRDM assembly, in addition to the arrangement of these components in the reactor, relative to the interfacing fuel assembly and guide tubes. In the following paragraphs, each reactivity control component is described in detail. The CRDM assembly is described in subsection 3.9.4.

The neutron source assemblies provide a means of monitoring the core during periods of low neutron activity. The thimble plug assemblies may be used to limit bypass flow through those fuel assembly thimbles which do not contain control rods, BA rods, or neutron source rods.

Wet annual burnable absorber rods consist of annular pellets of alumina-boron carbide (AL_2O_3-B_4C) burnable absorber material contained within two concentric Zircaloy tubes. These Zircaloy tubes which form the inner and the outer clad for the WABA rod are plugged, pressurized with helium, and seal-welded at each end to encapsulate the annular stack of absorber material. The absorber stack length (figure 4.2-12) is positioned axially within the WABA rods by the use of Zircaloy bottom-end spacers.

An annular plenum is provided within the rod to accommodate the helium gas released from the absorber material as it depletes during irradiation. The reactor coolant flows inside the inner tube and outside the outer tube of the annular rod. A typical WABA rod is shown in longitude and cross-section in figure 4.2-12. Additional design details are given in Section 3.0 of reference 22.

The BA rods in each fuel assembly are grouped and attached together at the top end of the rods to a holddown assembly by a flat, perforated retaining plate, which fits within the fuel assembly top nozzle and rests on the adapter plate.

The retaining plate and the BA rods are held down and restrained against vertical motion through a spring pack which is attached to the plate and is compressed by the upper core plate when the reactor upper internals assembly is lowered into the reactor. This arrangement ensures that the BA rods cannot be ejected from the core by flow forces. Each WABA rod is permanently attached to the base plate by a crimped attaching nut.

4.2.2.3.3 Neutron Source Assembly

The purpose of the neutron source assembly is to provide a base neutron level to ensure that the detectors are operational and responding to core multiplication neutrons. A neutron source is placed in the reactor to provide a positive neutron count of at least one-half count per second on the source range detectors attributable to core neutrons. The detectors, called source range detectors, are used primarily when the core is subcritical and during special subcritical modes of operations.

The source assembly also permits detection of changes in the core multiplication factor during core loading, refueling, control rod testing, and approach to criticality. This can be done since the multiplication factor is related to an inverse function of the detector count rate. Changes in the multiplication factor can be detected during addition of fuel assemblies while loading the core, changes in control rod positions, and changes in boron concentration.

Both primary and secondary neutron source rods are used. The primary source rod, containing a radioactive material, spontaneously emits neutrons during initial core loading, reactor startup, and initial operation of the first core. After the primary source rod decays beyond the desired neutron flux level, neutrons are then supplied by the secondary source rod. The secondary source rod contains a stable material, which must be activated during reactor operation. The activation results in the subsequent release of neutrons.

Four source assemblies are installed in the reactor core: two primary source assemblies and two secondary source assemblies. Each primary source assembly contains one primary source rod and a number of BA rods. Each secondary source assembly contains a symmetrical grouping of four secondary source rods. Locations not filled with a source or BA rod contain a thimble plug. The source assemblies are shown in figures 4.2-13 and 4.2-14.

Neutron source assemblies are employed at opposite sides of the core. The assemblies are inserted into the RCC guide thimbles in fuel assemblies at selected unrodded locations.

As shown in figures 4.2-13 and 4.2-14, the source assemblies contain a holddown assembly identical to that of the BA assembly.

The primary and secondary source rods both utilize the same cladding material as the absorber rods. The secondary source rods contain Sb-Be pellets stacked to a height of approximately 88 in. The primary source rods contain capsules of californium (Pu-Be possible alternate) source material and alumina spacer to position the source material within the cladding. The rods in each assembly are permanently fastened at the top end to a holddown assembly.

The other structural members, except for the springs, are constructed of type 304 stainless steel. The springs exposed to the reactor coolant are Inconel-718.

A double-encapsulated, secondary source rod assembly was introduced as a replacement to the single-encapsulated, secondary source rod assembly in Unit 1 Cycle 8 and Unit 2 Cycle 7. The double-encapsulated, secondary source design provides additional margin against source material leakage. This assembly has the same exterior dimensions as the single-encapsulated, secondary source assembly. The antimony-beryllium pellets (stack height 88 in.) are encapsulated in a pressurized, 304 stainless-steel tube and then inserted in an outer-pressurized, stainless-steel tube as indicated on figure 4.2-14. This assembly makes up the new double-encapsulated, secondary source rod assembly design.

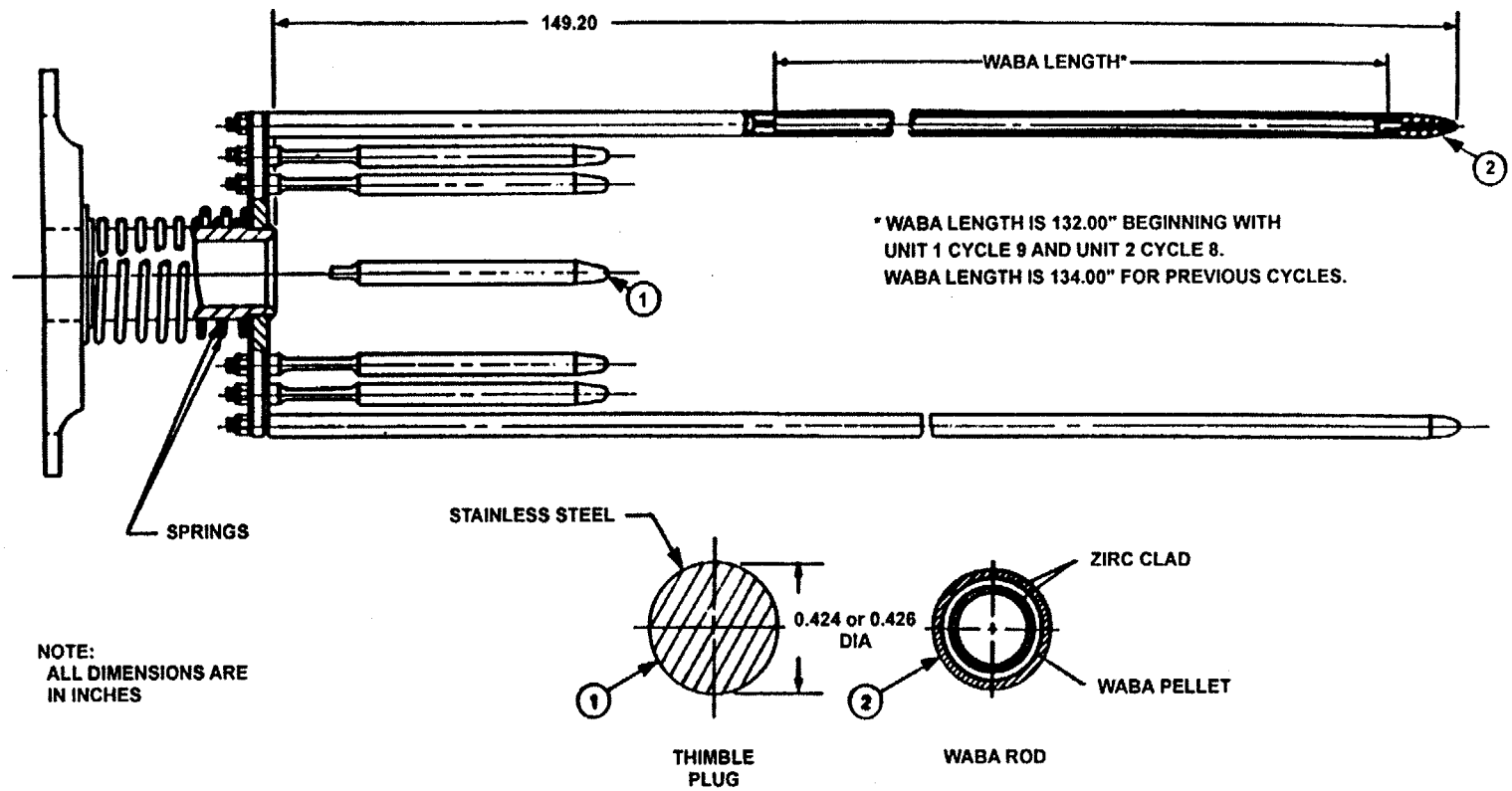

NOTE:
ALL DIMENSIONS ARE
IN INCHES

REV 9 5/00

VOGTLE
ELECTRIC GENERATING PLANT
UNIT 1 AND UNIT 2

WET ANNULAR BURNABLE ABSORBER
(WABA) ASSEMBLY

FIGURE 4.2-11 (SHEET 2 OF 2)

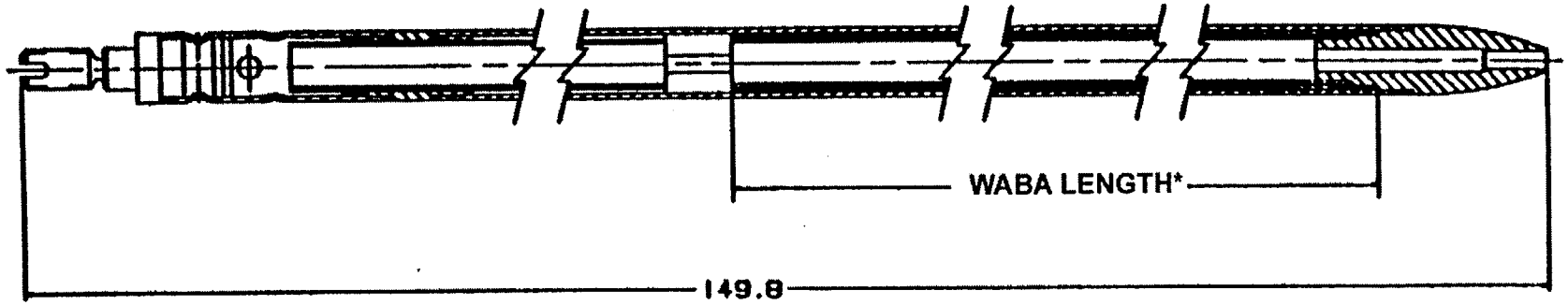

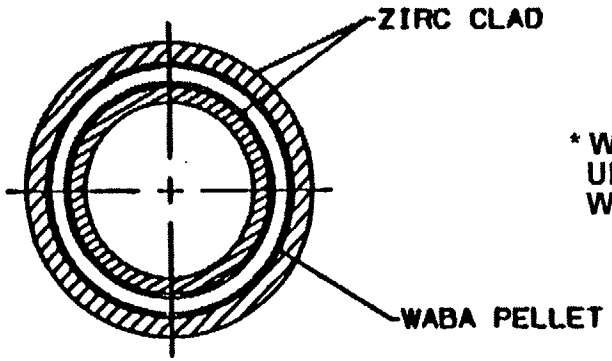

* WABA LENGTH IS 132.00" BEGINNING WITH UNIT 1 CYCLE 9 AND UNIT 2 CYCLE 8. WABA LENGTH IS 134.00" FOR PREVIOUS CYCLES.

REV 9 5/00
REV 1 3/91

VOGTLE ELECTRIC GENERATING PLANT UNIT 1 AND UNIT 2	BA ROD CROSS SECTION (WET ANNULAR BURNABLE ABSORBER) FIGURE 4.2-12 (SHEET 2 OF 2)

Each fuel assembly contains a 17 x 17 rod array composed of 264 fuel rods, 24 guide thimbles, and an incore instrumentation tube. Figure 4.2-1 shows a cross-sectional view of the 17 x 17 fuel assemblies. Further details of the fuel assembly are given in section 4.2.

For initial core loading, the fuel rods within a given assembly have the same uranium enrichment in both the radial and axial planes. Fuel assemblies of three different enrichments are used in the initial core loading to establish a favorable radial power distribution. Figure 4.3-1 shows the fuel loading pattern to be used in the first core. Two regions consisting of the two lower enrichments are interspersed to form a checkerboard pattern in the central portion of the core. The third region is arranged around the periphery of the core and contains the highest enrichment. The enrichments for the VEGP initial cycle are shown in table 4.3-1.

For reload cores, VANTAGE 5 fuel assemblies may be used. Detailed descriptions of the VANTAGE 5 fuel features are given in section 4.2. Integral fuel burnable absorbers (IFBA) in the central portion of the fuel stack may be used in reload cores to control excess reactivity. Axial blankets consisting of unenriched, mid-enriched, or fully enriched solid or annular fuel pellets may be placed at the ends of the enriched pellet stack. The unenriched or mid-enriched axial blanket pellets are used in reload cores to reduce neutron leakage and to improve fuel utilization. The annular blanket pellets are used to increase the void volume for gas accommodation within the fuel rod.

A typical reloading pattern is also shown in figure 4.3-1 with new fuel interspersed checkerboard-style in the center and depleted fuel on the periphery. The core will normally operate approximately 18 months between refueling, accumulating approximately 20,000 MWd/tonne of uranium per year. The exact reloading pattern, the initial and final positions of assemblies, and the number of fresh assemblies and their placement are dependent on the energy requirement for the next cycle and burnup and power histories of the previous cycles.

The core average enrichment is determined by the amount of fissionable material required to provide the desired core lifetime and energy requirements. The physics of the burnout process is such that operation of the reactor depletes the amount of fuel available due to the absorption of neutrons by the U-235 atoms and their subsequent fission. In addition, the fission process results in the formation of fission products, some of which readily absorb neutrons. These effects, depletion and the buildup of fission products, are partially offset by the buildup of plutonium shown in figure 4.3-2 for a typical 17 x 17 fuel assembly, which occurs due to the nonfission absorption of neutrons in U-238. Therefore, at the beginning of any cycle a

reactivity reserve equal to the depletion of the fissionable fuel and the buildup of fission product poisons over the specified cycle life must be built into the reactor. This xcess reactivity is controlled by removable neutron-absorbing material in the form of boron dissolved in the primary coolant and BA rods and/or ZrB_2-coated fuel pellets. The stack length of the coated fuel pellets may vary for different reload designs, with the optimum length determined on a design-specific basis.

The concentration of the soluble boron is varied to compensate for reactivity changes due to fuel burnup, fission product poisoning including xenon and samarium, BA depletion, and the cold-to-operating moderator temperature change. Using its normal or emergency boration path, the CVCS is capable of inserting negative reactivity at a rate of approximately 30 pcm/min when the reactor coolant boron concentration is 1000 ppm and approximately 35 pcm/min when the reactor coolant boron concentration is 100 ppm. The peak burnout rate for xenon is 25 pcm/min. (Subsection 9.3.4 discusses the capability of the CVCS to counteract xenon decay.) Rapid transient reactivity requirements and safety shutdown requirements are met with control rods.

As the boron concentration is increased, the moderator temperature coefficient becomes less negative. High boron concentrations will cause the moderator temperature coefficient to be positive at beginning of life (BOL). Therefore, burnable absorber rods and/or IFBAs are used to reduce the soluble boron concentration sufficiently to ensure that the moderator coefficient is nonpositive at full power, is less than or equal to +7.0 pcm/°F below 70-percent power, and below a linearly decreasing limit of +7.0 pcm/°F to 0.0 pcm/°F between 70-percent power and 100-percent power, respectively.

During operation, the poison content in these rods is depleted, thus adding positive reactivity to offset some of the negative reactivity from fuel depletion and fission product buildup. The depletion rate of the BA rods and/or IFBA coated rods is not critical, since chemical shim is always available and flexible enough to cover any possible deviations in the expected BA depletion rate. Figure 4.3-3 is a plot of core depletion with and without BA rods, (as is typical of the first cycle and a typical reload containing IFBAs). Note that even at end of life (EOL) conditions some residual poison remains in the BA rods, resulting in a net decrease in the cycle lifetime. The IFBA coating at EOL conditions leaves no residual poison.

TABLE 4.3-1 (SHEET 1 OF 3)

REACTOR CORE DESCRIPTION

Active core		
Equivalent diameter (in.)		132.7
Active fuel height (in.)		143.7
Height-to-diameter ratio		1.08
Total cross section area (ft^2)		96.06
H_2O/U molecular ratio, lattice, cold	LOPAR:	2.41
	VANTAGE 5:	2.73
Reflector thickness and composition		
Top - water plus steel (in.)		10
Bottom - water plus steel (in.)		10
Side - water plus steel (in.)		15
Fuel assemblies		
Number		193
Rod array		17 x 17
Rods per assembly		264
Rod pitch (in.)		0.496
Overall transverse dimensions (in.)		8.426 x 8.426
Fuel weight, as UO_2 (lb)	LOPAR:	222,762
	VANTAGE 5:	204,231[a]
Zircaloy weight (lb) (active core)	LOPAR:	45,296
Zircaloy/ZIRLO™ weight (lb) (active core)		VANTAGE 5: 45,914
Number of grids per assembly	LOPAR:	8 R type
	VANTAGE 5:	2 nonmixing vane type, 6 mixing vane type, 3 IFM 1 protective grid
Composition of grids	LOPAR:	Inconel-718
	VANTAGE 5:	2 Inconel-718 end grids 6 Zircaloy-4/ZIRLO™ spacer grids 3 Zircaloy-4/ZIRLO™ IFM grids 1 Inconel-718 protective grid
Weight of grids in active core (lb)	LOPAR:	Inconel-718 - 2324
	VANTAGE 5:	Inconel-718 - 332 Zircaloy-4/ZIRLO™ 3547
Number of guide thimbles per assembly		24
Composition of guide thimbles		Zircaloy-4/ZIRLO™

REV 9 5/00
REV 8 10/98
REV 6 4/97
REV 3 12/92

TABLE 4.3-1 (SHEET 3 OF 3)

Mass of UO_2 per ft of fuel rod (lb/ft) LOPAR:	0.364
VANTAGE 5:	0.334[a]
RCCAs	
Neutron absorber	Hafnium or Ag-In-Cd
Diameter (in.)	0.341
Density (lb/in.^{3})	Hafnium 0.454, Ag-In-Cd 0.367
Cladding material	Type 304, cold-worked SS
Clad thickness (in.)	0.0185
Number of clusters, full-length	53
Number of absorber rods per cluster	24
BA rods (first cycle)	
Number	1518
Material	Borosilicate glass
OD (in.)	0.381
Inner tube, OD (in.)	0.1805
Clad material	SS
Inner tube material	SS
Boron loading (without B_2O_3 in glass rod)	12.5
Weight of boron-10 per foot of rod (lb/ft)	0.00419
Initial reactivity worth (%$\Delta\rho$)	~7.6 (hot) ~5.5 (cold)
Burnable Absorbers (reload cycles)	
Wet Annular Burnable Absorber Rods:	
Material	Al_2O_3-B_4C
OD (in.)	0.381
Inner tube, OD (in.)	0.267
Clad material	Zircaloy
Inner tube material	Zircaloy
B_{10} content (mg/cm)	6.03
Integral Fuel Burnable Absorbers:	
Material	ZrB_2
Typical B_{10} content (mg/in.)	1.50 to 2.25 (1.0X to 1.5X)
Excess reactivity (first cycle)	
Maximum fuel assembly $K\infty$ (cold, clean, unborated water)	1.39
Maximum core reactivity (cold, zero power, beginning of cycle, zero soluble boron)	1.222

a. The decrease in fuel weight due to annular axial blanket pellets is not considered.

36. Howard, V. C., and Gulvin, T. G., "Thermal Conductivity Determinations on Uranium Dioxide by a Radial Flow Method," UKAEA IG-Report 51, November 1960.

37. Lucks, C. F., and Deem, H. W., "Thermal Conductivity and Electrical Conductivity of UO_2," in Progress Reports Relating to Civilian Applications, BMI-1448 (Revised) for June 1960, BMI-1489 (Revised) for December 1960, and BMI-1518 (Revised) for May 1961.

38. Daniel, J. L., Matolich, J., Jr., and Deem, H. W., "Thermal Conductivity of UO_2," HW-69945, September 1962.

39. Feith, A. D., "Thermal Conductivity of UO_2 by a Radial Heat Flow Method," TID-21668, 1962.

40. Vogt, J., Grandell, L., and Runfors, U., "Determination of the Thermal Conductivity of Unirradiated Uranium Dioxide," AB Atomenergi Report RMB-527, 1964, Quoted by IAEA Technical Report Series No. 59, "Thermal Conductivity of Uranium Dioxide."

41. Nishijima, T., Kawada, T., and Ishihata, A., "Thermal Conductivity of Sintered UO_2 and Al_2/O_3 at High Temperatures," Journal of the American Ceramic Society 48, pp 31-34, 1965.

42. Ainscough, J. B., and Wheeler, M. J., "Thermal Diffusivity and Thermal Conductivity of Sintered Uranium Dioxide, "Proceedings of the Seventh Conference of Thermal Conductivity, National Institute of Standards and Technology, Washington, p 467, 1968.

43. Godfrey, T. G., et al., "Thermal Conductivity of Uranium Dioxide and Armco Iron by an Improved Radial Heat Flow Technique," ORNL-3556, June 1964.

44. Stora, J. P., et al., "Thermal Conductivity of Sintered Uranium Oxide Under In-Pile Conditions," EURAEC-1095, August 1964.

45. Bush, A. J., "Apparatus for Measuring Thermal Conductivity to 2500°C," Report 64-1P6-401-43 (Proprietary), Westinghouse Research Laboratories, February 1965.

46. Asamoto, R. R., Anselin, F. L., and Conti, A. E., "The Effect of Density on the Thermal Conductivity of Uranium Dioxide," GEAP-5493, April 1968.

47. Kruger, O. L., Heat Transfer Properties of Uranium and Plutonium Dioxide, Paper 11-N-68F, Presented at the Fall Meeting of Nuclear Division of the American Ceramic Society, Pittsburgh, September 1968.

48. Hochreiter, L. E., Chelemer, H., and Chu, P. T., "THINC-IV, An Improved Program for Thermal-Hydraulic Analysis of Rod Bundle Cores," WCAP-7956-P-A, February 1989.

49. Duncan, R. N., "Rabbit Capsule Irradiation of UO_2," CVTR Project, CVNA-142, June 1962.

50. Nelson, R. C., et al., "Fission Gas Release from UO_2 Fuel Rods with Gross Central Melting," GEAP-4572, July 1964.

51. Gyllander, J. A., "In-Pile Determination of the Thermal Conductivity of UO_2 in the Range 500 to 2500°C," AE-411, January 1971.

52. Lyons, M. F., et al., "UO_2 Powder and Pellet Thermal Conductivity During Irradiation," GEAP-5100-1, March 1966.

53. Coplin, D. H., et al., "The Thermal Conductivity of UO_2 by Direct In-Reactor Measurements," GEAP-5100-6, March 1968.

54. Bain, A. S.,"The Heat Rating Required to Produce Center Melting in Various UO_2 Fuels," ASTM Special Technical Publication No. 306, Philadelphia, pp 30-46, 1962.

55. Stora, J. P., "In-Reactor Measurements of the Integrated Thermal Conductivity of UO_2 - Effect of Porosity," Transactions of the American Nuclear Society 13, pp 137-138, 1970.

56. International Atomic Energy Agency, "Thermal Conductivity of Uranium Dioxide," Report of the Panel Held in Vienna, April 1965, IAEA Technical Reports Series, No. 59, Vienna, 1966.

57. Poncelet, C. G., "Burnup Physics of Heterogeneous Reactor Lattices," WCAP-6069, June 1965.

58. Nodvick, R. J., "Saxton Core II Fuel Performance Evaluation," WCAP-3385-56, Part II, "Evaluation of Mass Spectrometric and Radiochemical Analyses or Irradiated Saxton Plutonium Fuel," July 1970.

84. Motley, F. E., et al., "New Westinghouse Correlation WRB-1 for Predicting Critical Heat Flux in Rod Bundles with Mixing Vane Grids," WCAP-8762-P, July 1984.

85. Davidson, S. L. and Kramer, W. R., ed, "Reference Core Report VANTAGE 5 Fuel Assembly," WCAP-10444-P-A, September 1985.

86. Tong, L. S., "Critical Heat Fluxes in Rod Bundles, Two Phase Flow and Heat Transfer in Rod Bundles," Annual Winter Meeting ASME, November 1968, p. 3146.

87. Scherder, W.J. (Ed.), et al. "Reactor Core Response to Excessive Secondary Steam Releases," WCAP-9226-P-A, Revision 1, February 1998.

88. Motley, F. E. and Cadek, F. F., "DNB Test Results for R-Grid Thimble Cold Wall Cells," WCAP-7695-L Addendum 1, October 1972.

89. Davidson, S. L. and Iorii, J. A., "Reference Core Report - 17 x 17 Optimized Fuel Assembly," WCAP-9500-A, May 1982.

90. Letter from E. P. Rahe (W) to Miller (NRC), NS-EPR-2573, Subject: "WCAP-9500 and WCAPS-9401/9402 NRC SER Mixed Core Compatibility Items," March 19, 1982.

91. Letter from C. O. Thomas (NRC) to Rahe (W), Subject: "Supplemental Acceptance No. 2 for Referencing Topical Report WCAP-9500," January 1983.

92. Letter from W. J. Johnson (Westinghouse) to M. W. Hodges (NRC), NS-NRC-87-3268, Subject: "VANTAGE 5 DNB Transition Core Effects," October 2, 1987.

93. Letter from M. W. Hodges (NRC) to W. J. Johnson (W), "NRC SER on VANTAGE 5 Transition Core Effects," February 24, 1988.

94. Schueren, P. and McAtee, K. R., "Extension of Methodology for Calculating Transition Core DNBR Penalties," WCAP-11837-P-A, January 1990.

95. Letter From C. Berlinger (NRC) to E. P. Rahe Jr. (W), Subject: "Request for Reduction in Fuel Assembly Burnup Limit for Calculation of Maximum Rod Bow Penalty," June 18, 1986.

96. Weiner, R. A., et al., "Improved Fuel Performance Models for Westinghouse Fuel Rod Design and Safety Evaluations," WCAP-10851-P-A, August 1988.

97. Leech, W. J., et al., "Revised PAD Code Thermal Safety Model," WCAP-8720, Addendum 2, October 1982.

98. Friedland, A. J. and Ray, S., "Improved THINC IV Modeling for PWR Core Design," WCAP-12330-A, September 1991.

associated logic provide overpressure mitigation for those transients which might occur if the RHRS isolation valves were inadvertently closed. The PORV logic is manually armed at the system setpoint.

Two pressurizer PORVs are each supplied with actuation logic. The logic for each PORV continuously monitors RCS temperature and pressure, converts an auctioneered RCS temperature to the Appendix G allowable pressure, and then compares the allowable pressure to the actual RCS pressure. As the actual RCS pressure approaches the allowable pressure, a main control board alarm is annunciated. If the RCS pressure continues to increase, an actuation signal is transmitted to a PORV and the valve opens to migitate the transient.

As described in subsection 5.4.13, the VEGP PORVs are safety related. They were designed in accordance with the ASME Code and are qualified via the Westinghouse pump and valve operability program which is described in paragraph 3.10.N.2.2.

The hardware and logic associated with this function will operate following an operating basis earthquake. Offsite power is not required for the system to function. The actuation logic in the system is testable. However, the PORVs and RHR relief valves are not exercised with the reactor at power. They are capable of being tested as required by the ASME Code and the VEGP Technical Specifications.

5.2.2.10.1 Transient Evaluation

Potential overpressurization transients to the RCS, while at relatively low temperatures, can be caused by either of two types of events to the RCS; i.e., mass input or heat input. Both types result in more rapid pressure changes when the RCS is water solid.

Anticipated mass and heat input transients are evaluated to demonstrate conformance with Appendix G. The most limiting heat input transient is an inadvertant reactor coolant pump startup in a loop where the steam generator temperature is 50°F (27.78°C) higher than the other temperatures in the loop. The range of RCS temperatures was 70°F to 280°F with corresponding range of steam generator temperatures from 120°F to 330°F. The most limiting mass input transient is a charging-letdown mismatch where two centrifugal charging pumps and one positive displacement charging pump are charging water into the reactor coolant system with the letdown path isolated.

It should be noted that the following transient is also addressed. With the plant in a cooled down and depressurized condition in which the cold overpressure protection system is

required to be operable and with charging and letdown established and RHRS open to RCS, a dc vital bus fails. This failure causes normal letdown to isolate and also results in the loss of one of the two PORVs. However, RHRS relief valves mitigate the transient.

5.2.2.10.2 Administrative Controls

During plant operation the following precautions are observed:

A. At least one RHR inlet line from the reactor coolant loop is not isolated unless there is a steam bubble in the pressurizer. This precaution ensures that there is a relief path from the reactor coolant loop to a RHR suction line relief valve when the RCS is at low temperature and is water solid.

B. Whenever the plant is water solid and the reactor coolant pressure is being maintained by the low pressure letdown control valve, letdown should include flow from the operating RHR loop through the RHRS cleanup to the letdown heat exchanger valve.

C. One RCP should normally be running anytime RCS temperature is changed by more than 10°F in 1 h. Additionally, RCPs should not be started if steam generator secondary water temperature is greater than 10°F above the RCS temperature.

D. During a typical plant cooldown, operable steam generators should be connected to the steam header to ensure a uniform cooldown of the reactor coolant loops.

E. To preclude inadvertent emergency core cooling system (ECCS) actuation during heatup and cooldown, blocking of the high pressurizer pressure, and low steam line pressure safety injection, signal actuation logic at 1970 psig is required. These manual blocking features are further discussed in paragraph 7.3.1.2.2.6.

   During further cooldown, closure and power lockout of the accumulator isolation valves is performed at 1000 psig and power lockout to the safety injection pumps is performed at approximately 350°F in the RCS.

F. Periodic ECCS pump performance testing requires the testing of the pumps during normal power operation or at hot shutdown conditions. This precludes any potential for developing a cold overpressurization transient.

TABLE 5.2.3-3 (SHEET 2 OF 2)

a. Refer to the Technical Requirements Manual for required reactor coolant chemistry limits.

b. Oxygen concentration must be controlled to less than 0.1 ppm in the reactor coolant by scavenging with hydrazine prior to plant operation above 250°F. During power operation with the specified hydrogen concentration maintained in the coolant, the residual oxygen concentration will not exceed 0.005 ppm.

c. Halogen concentrations must be maintained below the specified values at all times regardless of system temperature.

d. Hydrogen must be maintained in the reactor coolant for all plant operations with nuclear power above 1 MW.

e. Solids concentration determined by filtration through filter having 0.45-μm pore size.

f. The specified lithium concentrations must be established for startup testing prior to heatup beyond 150°F. During cold hydrostatic testing and hot functional testing in the absence of boric acid, the reactor coolant limits for lithium hydroxide must be maintained to provide inhibition of halogen stress corrosion cracking.

g. These limits are included in the table of reactor coolant specifications as recommended standards for monitoring coolant purity. Establishing coolant purity within the limits shown for these species is judged desirable with the current data base to minimize fuel clad crud deposition which affects the corrosion resistance and heat transfer of the clad.

5.3.3 REACTOR VESSEL INTEGRITY

5.3.3.1 Design

The reactor vessel is cylindrical with a welded hemispherical bottom head and a removable, bolted, flanged, and gasketed hemispherical upper head. The reactor vessel flange and head are sealed by two hollow metallic O-rings. Seal leakage is detected by means of two leakoff connections, one between the inner and outer ring and one outside the outer O-ring. The vessel contains the core, core support structures, control rods, and other parts directly associated with the core. The reactor vessel closure head contains head adapters. These head adapters are tubular members, attached by partial penetration welds to the underside of the closure head. The upper end of these adapters contains acme threads for the assembly of control rod drive mechanisms (CRDMs) or instrumentation adapters. The seal arrangement at the upper end of these adapters consists of a welded flexible canopy seal. Inlet and outlet nozzles are located symmetrically around the vessel. Outlet nozzles are arranged on the vessel to facilitate optimum layout of the reactor coolant system equipment. The inlet nozzles are tapered from the coolant loop vessel interfaces to the vessel inside wall to reduce loop pressure drop.

The bottom head of the vessel contains penetration nozzles for connection and entry of the nuclear incore instrumentation. Each nozzle consists of a tubular member made of either an Inconel or an Inconel-stainless steel composite tube. Each tube is attached to the inside of the bottom head by a partial penetration weld.

Internal surfaces of the vessel which are in contact with primary coolant are weld overlay with 0.125-in. minimum of stainless steel or Inconel.

The reactor vessel is designed and fabricated in accordance with the requirements of the American Society of Mechanical Engineers (ASME) Code, Section III. Principal design parameters of the reactor vessel are given in table 5.3.3-1. The reactor vessel is shown in figure 5.3.3-1.

There are no special design features which would prohibit the in situ annealing of the vessel. If the unlikely need for an annealing operation was required to restore the properties of the vessel material opposite the reactor core because of neutron irradiation damage, a metal temperature greater than 650°F for a maximum period of 168 h would be applied.[4] Various modes of heating may be used, depending on the temperature required.

The reactor vessel materials surveillance program is adequate to accommodate the annealing of the reactor vessel. Sufficient specimens are available to evaluate the effects of the annealing treatment.

Cyclic loads are introduced by normal power changes, reactor trips, and startup and shutdown operations. These design base cycles are selected for fatigue evaluation and constitute a conservative design envelope for the projected plant life. Vessel analysis results in a usage factor that is less than 1.

The design specifications require analysis to prove that the vessel is in compliance with the fatigue and stress limits of the ASME Code, Section III. The loadings and transients specified for the analysis are based on the most severe conditions expected during service. The heatup and cooldown rates are 100°F/h for normal operations and under abnormal or emergency conditions. This rate is reflected in the vessel design specifications.

5.3.3.2 Materials of Construction

The materials used in the fabrication of the reactor vessel are discussed in subsection 5.2.3.

5.3.3.3 Fabrication Methods

The VEGP reactor vessel manufacturer is Combustion Engineering Corporation.

The fabrication methods used in the construction of the reactor vessel are discussed in paragraph 5.3.1.2.

5.3.3.4 Inspection Requirements

The nondestructive examinations performed on the reactor vessel are described in paragraph 5.3.1.3.

5.3.3.5 Shipment and Installation

The reactor vessel is shipped in a horizontal position on a shipping sled with a vessel-lifting truss assembly. All vessel openings are sealed to prevent the entrance of moisture, and an adequate quantity of desiccant bags is placed inside the vessel. These are usually placed in a wire mesh basket attached to the vessel cover. All carbon steel surfaces, except for the

vessel support surfaces and the top surface of the external seal ring, are painted with a heat-resistant paint before shipment.

The closure head is also shipped with a shipping cover and skid. An enclosure attached to the ventilation shroud support ring protects the control rod mechanism housings. All head openings are sealed to prevent the entrance of moisture, and an adequate quantity of desiccant bags is placed inside the head. These are placed in a wire mesh basket attached to the head cover. All carbon steel surfaces are painted with heat-resistant paint before shipment. A lifting frame is provided for handling the vessel head.

5.3.3.6 Operating Conditions

Operating limitations for the reactor vessel are presented in the Pressure Temperature Limit Report (PTLR).

In addition to the analysis of primary components discussed in paragraph 3.9.1.4, the reactor vessel is further qualified to ensure against unstable crack growth under faulted conditions. Actuation of the emergency core cooling system (ECCS) following a loss-of-coolant accident produces relatively high thermal stresses in regions of the reactor vessel which come into contact with ECCS water. Primary consideration is given to these areas, including the reactor vessel beltline region and the reactor vessel primary coolant nozzle, to ensure the integrity of the reactor vessel under this severe postulated transient. The Westinghouse Owners Group evaluated TMI Action Item II.K.2.13, and the item is satisfied upon submittal of RT_{NDT} values which are below the pressurized thermal shock (PTS) rule screening values. Additionally, new calculations were performed based on the requirements of Generic Letter 92-01 and the results are given in tables 5.3.3-2 and 5.3.3-3.

For the beltline region, significant developments have recently occurred in order to address PTS events. On the basis of recent deterministic and probabilistic studies, taking U.S. pressurized water reactor operating experience into account, the Nuclear Regulatory Commission staff concluded that conservatively calculated screening criterion values of RT_{NDT} less than 270° for plate material and axial welds, and less than 300° for circumferential welds, present an acceptably low risk of vessel failure from PTS events. These values were chosen as the screening criterion in the PTS rule for 10 CFR 50.34 (new plants) and 10 CFR 50.61 (operating plants).[2] The conservative methods chosen by the NRC staff for the calculation of RT_{PTS} for the purpose of comparison with the screening criterion is presented in paragraph (b)(2) of 10 CFR 50.61. Details of the analysis method and the basis for the PTS rule can be found in SECY-82-465.[3]

The reactor vessel beltline materials are specified in subsection 5.3.1. The fluence of 4.76 x 10^{19} n/cm^2 which is the design basis fluence at the vessel inner radius, at 48 EFPY, at the peak location, was used for calculating all of the RT_{PTS} values. RT_{PTS} is RT_{NDT}, the reference nilductility transition temperature as calculated by the method chosen by the NRC staff as presented in paragraph (b)(2) of 10 CFR 50.61, and the PTS rule. The PTS rule states that this method of calculating RT should be used in reporting values used to be compared to the above screening criterion set in the PTS rule. The screening criteria will not be exceeded using the method of calculation prescribed by the PTS rule for the vessel design lifetime. The material properties, initial RT_{NDT}, and end-of-life RT_{PTS} values are in tables 5.3.3-2 and 5.3.3-3. The materials identified in tables 5.3.3-2 and 5.3.3-3 are those materials that are exposed to high fluence levels at the beltline region of the reactor vessel and are, therefore, the subject of the PTS rule. These materials, therefore, are a subset of the materials identified in subsection 5.3.1.

The principles and procedures of linear elastic fracture mechanics (LEFM) are used to evaluate thermal effects in the regions of interest. The LEFM approach to the design against failure is basically a stress intensity consideration in which criteria are established for fracture instability in the presence of a crack. Consequently, a basic assumption employed in LEFM is that a crack or crack-like defect exists in the structure. The essence of the approach is to relate the stress field developed in the vicinity of the crack tip to the applied stress on the structure, the material properties, and the size of defect necessary to cause failure.

The elastic stress field at the crack tip in any cracked body can be described by a single parameter designated as the stress intensity factor, K. The magnitude of the stress intensity factor K is a function of the geometry of the body containing the crack, the size and location of the crack, and the magnitude and distribution of the stress.

The criterion for failure in the presence of a crack is that failure will occur whenever the stress intensity factor exceeds some critical value. For the opening mode of loading (stresses perpendicular to the major plane of the crack), the stress intensity factor is designated as K_I and the critical stress intensity factor is designated K_{IC}. Commonly called the fracture toughness, K_{IC} is an inherent material property which is a function of temperature. Any combination of applied load, structural configuration, crack geometry, and size which yields a stress intensity factor greater than K_{IC} for the material will result in crack instability.

Auxiliary component cooling water is supplied to the external upper bearing oil cooler and to the integral lower bearing oil cooler.

The oil spillage protection system is attached to the reactor coolant pump motor and is provided to contain and channel oil to a common collection point.

The motor is a drip-proof squirrel cage induction motor with Class F thermalastic epoxy insulation, fitted with external water/air coolers. The rotor and stator are of standard construction. Six resistance temperature detectors are embedded in the stator windings to sense stator temperature. A flywheel and an antireverse rotation device are located at the top of the motor.

The internal parts of the motor are cooled by air. Integral vanes on each end of the rotor draw air in through cooling slots in the motor frame. This air passes through the motor with particular emphasis on the stator end turns. It is then routed to the external water/air coolers, which are supplied with ACCW. Each motor has two such coolers, mounted diametrically opposed to each other. Coolers are sized to maintain optimum motor-operating temperature. The air is finally exhausted to the containment environment.

Each of the reactor coolant pump assemblies is equipped for continuous monitoring of reactor coolant pump shaft and frame vibration levels. Shaft vibration is measured by two relative shaft probes mounted on top of the pump seal housing; the probes are located 90° apart in the same horizontal plane and mounted near the pump shaft. Frame vibration is measured by two velocity seismoprobes located 90° apart in the same horizontal plane and mounted at the top of the motor support stand. Proximeters and converters linearize the probe output, which is displayed on monitor meters in the control building, with alarm functions available in the control room. The monitor meters automatically indicate the highest output from the relative probes and seismoprobes; manual selection allows monitoring of individual probes. Indicator lights display caution and danger limits of vibration.

The spool piece, which is a removable shaft segment, is located between the motor coupling flange and the pump coupling flange; the spool piece allows removal of the pump seals with the motor in place. The pump internals, motor, and motor stand can be removed from the casing without disturbing the reactor coolant piping. The flywheel is available for inspection by removing the cover.

All parts of the pump in contact with the reactor coolant are austenitic stainless steel except for seals, bearings, and special parts.

5.4.1.2.3 Loss of Seal Injection

Should a loss of seal injection to the reactor coolant pumps occur, the pump radial bearing and seals are lubricated by reactor coolant flowing up through the pump. Under these conditions, the ACCW continues to provide flow to the thermal barrier heat exchanger; this heat exchanger, functioning in its backup capacity, cools the reactor coolant before it enters the pump radial bearing and the shaft seal area. The loss of seal injection flow may result in a temperature increase in the pump bearing area, a temperature increase in the seal area, and a resultant increase in the No. 1 seal leak rate; however, pump operation can be continued provided these parameters remain within the allowable limits. Under certain low seal leak-off conditions it is possible that seal temperatures may increase above allowable limits in 1 to 2 hours requiring shutdown of the pump.

5.4.1.2.4 Loss of Auxiliary Component Cooling Water

Should a loss of ACCW to the reactor coolant pumps occur, the chemical and volume control system continues to provide seal injection flow to the reactor coolant pumps; the seal injection flow is sufficient to prevent damage to the seals with a loss of thermal barrier cooling. However, the loss of ACCW to the motor bearing oil coolers will result in an increase in oil temperature and a corresponding rise in motor bearing metal temperature. It has been demonstrated by testing at the Westinghouse Electromechanical Division that the reactor coolant pumps will incur no damage as a result of an ACCW flow interruption of 10 min.

Safety-related transmitters will be provided to redundantly monitor ACCW flow for the upper and lower reactor coolant pump bearings, as well as to monitor ACCW flow for the reactor coolant pump thermal barriers. These transmitters will provide flow indication and actuate low-flow alarms in the control room.

Operating procedures are provided for a loss of ACCW and seal injection to the reactor coolant pumps and/or motors. Included in these operating procedures is the provision to trip the reactor if ACCW flow, as indicated by the instrumentation discussed above, is lost to the reactor coolant pump motors and cannot be restored within 10 min. The reactor coolant pumps will also be tripped following the reactor trip.

manufacturer's test of 125 percent of the maximum synchronous speed of the motor.

5.4.1.5.2 Fabrication and Inspection

The flywheel consists of two thick plates bolted together. The flywheel material is produced by a process that minimizes flaws in the material and improves its fracture toughness properties, i.e., an electric furnace with vacuum degassing. Each plate is fabricated from SA-533, Grade B, Class 1 steel. Supplier certification reports are available for all plates and demonstrate the acceptability of the flywheel material on the basis of the requirements of NRC Regulatory Guide 1.14.

Flywheel blanks are flame cut from the SA-533, Grade B, Class 1 plates with at least 1/2 in. of stock left on the outer surface and bore surface for machining to final dimensions. The finished machined bores, keyways, and drilled holes are subjected to magnetic particle or liquid penetrant examinations in accordance with the requirements of Section III of the ASME Code. The finished flywheels, as well as the flywheel material (rolled plate), are subjected to 100-percent volumetric ultrasonic inspection using procedures and acceptance standards specified in Section III of the ASME Code.

The reactor coolant pump motors are designed such that, by removing the cover to provide access, the flywheel is available to allow an inservice inspection program which was originally in accordance with the recommendations of Regulatory Guide 1.14, referencing Section XI of the ASME Code for inspection scheduling purposes. Subsequently, the NRC authorized the use of an alternative flywheel inspection as addressed in Westinghouse WCAP-14535A, "Topical Report on Reactor Coolant Pump Flywheel Inspection Elimination." In this alternative inspection program, each flywheel is inspected at least once every 10 years by conducting either: (1) an in-place ultrasonic examination over the volume from the inner bore of the flywheel to the circle of one-half the outer radius, or (2) a surface examination (magnetic particle and/or liquid penetrant) of exposed surfaces of the disassembled flywheel.

5.4.1.5.3 Material Acceptance Criteria

The reactor coolant pump motor flywheel conforms to the following material acceptance criteria:

A. The nil ductility transition temperature (NDTT) of the flywheel material is obtained by two drop weight tests which exhibit no-break performance at 20°F in accordance with ASTM E-208. The above drop weight tests demonstrate that the NDTT of the flywheel material is no higher than 10°F.

B. A minimum of three Charpy V-notch (C_V) impact specimens from each plate shall be tested at ambient (70°F) temperature in accordance with the ASME SA-370 specification. The Charpy V-notch (C_V) energy in both the parallel and normal orientation with respect to the final rolling direction of the flywheel plate material is at least 50 ft-lb and 35-mil lateral expansion at 70°F, and, therefore, the flywheel material has a reference nil ductility temperature (RT_{NDT}) of 10°F. An evaluation of flywheel overspeed has been performed which concludes that flywheel integrity will be maintained.[1]

Thus, it is concluded that flywheel plate materials are suitable for use and can meet Regulatory Guide 1.14 acceptance criteria on the bases of suppliers certification data. The degree of compliance with Regulatory Guide 1.14 is further discussed in section 1.9.

..\vegpfsar\Chap5\5-4-1

A. Flow turbulence in the downcomer and tube bundle inletregion inhibit the formation of Von Karman's vortex train.

B. The spatial variations of crossflow velocities along the tube preclude vortex shedding at a single frequency.

C. Both axial flow and crossflow velocity components exist on the tubes. The axial flow component disrupts the Von Karman vortices.

Fluid elastic excitation was observed during the testing. The amplitudes of the vibrations were two orders of magnitude smaller than those of the turbulent flow-induced vibrations. Therefore, fluid elastic excitation is excluded from consideration as a factor in steam generator tube bundle vibrations.

Flow-induced vibrations due to flow turbulence cause stresses in the tubes that are two orders of magnitude below the endurance limit (30,000 psi) of the tube material. Therefore, the contribution to fatigue is negligible; and fatigue degradation from flow-induced vibration is not anticipated during normal operation.

Summarizing the results of analyses and tests of the steam generator for vibration, it can be stated that a check of all modes of tube vibration mechanisms has been completed. The conclusions that can be drawn are that the primary source of tube vibration is fluid turbulence and that the magnitude of the vibration is so small that, when combined with its total random nature, its contribution to tube fatigue is negligible. Therefore, fatigue degradation due to flow-induced vibration is not anticipated.

5.4.2.3.4 Allowable Tube-Wall Thinning under Accident Conditions

An evaluation has been performed to determine the extent of tube-wall thinning that can be tolerated under accident conditions. The worst-case loading conditions are assumed to be imposed upon uniformly thinned tubes at the most critical location in the steam generator. Under such a postulation design basis accident, vibration is of short enough duration that there is no endurance problem to be considered. The steam generator tubes, existing originally at their minimum wall thickness and reduced by a conservative general corrosion and erosion loss, can be shown to provide an adequate safety margin, that is, sufficient wall thickness, in addition to the minimum

required for a maximum stress less than the allowable stress limit, as it is defined by the ASME Code.

The results of a study made on D series (0.75-in. nominal diameter, 0.043-in. nominal wall thickness) tubes under accident loadings are discussed in reference 1. These results demonstrate that a minimum wall thickness of 0.026 in. would have a maximum faulted condition stress due to combined loss-of-coolant accident (LOCA) and safe shutdown earthquake (SSE) loads that is less than the allowable limit. This thickness is 0.010 in. less than the minimum D series tube-wall thickness of 0.039 in., which is reduced to 0.036 in. by the assumed general corrosion and erosion rate. Thus, an adequate safety margin is exhibited. The corrosion rate is based on a conservative weight-loss rate for Inconel tubing inflowing 650°F primary side reactor coolant fluid. The weight loss, when equated to a thinning rate and projected over a 40-year design objective with appropriate reduction after initial hours, is equivalent to 0.083-mils thinning. The assumed corrosion rate of 3 mils leaves a conservative 2.917 mils for general corrosion thinning on the secondary side.

The results of specific analysis for allowable tube wall thinning for the Vogtle Model F steam generator tubes under normal operating and accident loadings are discussed in reference 2. Based on this analysis, a minimum wall thickness of 0.014 inch is necessary to satisfy the stress limits of Regulatory Guide 1.121. Thus, the corresponding allowable tube wall degradation is 0.026 inch or 65 percent of the nominal wall. This limit results in a safety margin of 25 percent of the tube wall thickness (compared to the Technical Specification plugging limit of 40 percent) to address degradation growth and eddy current uncertainties in completing an operational assessment.

5.4.2.4 Steam Generator Materials

5.4.2.4.1 Selection and Fabrication of Materials

All pressure boundary materials used in the steam generator are selected and fabricated in accordance with the requirements of Section III of the ASME Code. A general discussion of materials specifications is given in subsection 5.2.3, with types of materials listed in tables 5.2.3-1 and 5.2.3-2. Fabrication of reactor coolant pressure boundary (RCPB) materials is also discussed in subsection 5.2.3, particularly in paragraphs 5.2.3.3 and 5.2.3.4

Testing has justified the selection of corrosion-resistant Inconel-600, a nickel-chromium-iron alloy (ASME SB-163), for the steam generator tubes. The channel head divider plate is Inconel (ASME SB-168). The interior surfaces of the reactor coolant channel head, nozzles, and manways are clad with

austenitic stainless steel. The primary side of the tube sheet is weld clad with Inconel (ASME SFA-5.14). The tubes are then seal welded to the tube-sheet cladding. These fusion welds, performed in compliance with Sections III and IX of the ASME Code, are dye-penetrant inspected and leakproof tested before each tube is hydraulically expanded the full depth of the tube-sheet bore.

Code cases used in material selection are discussed in subsection 5.2.1. The extent of conformance with Regulatory Guides 1.84, Design and Fabrication Code Case Acceptability ASME Section III, Division 1, and 1.85, Materials Code Case Acceptability ASME Section III, Division 1, is discussed in section 1.9.

During manufacture, cleaning is performed on the primary and secondary sides for the steam generator in accordance with written procedures which follow the guidance of Regulatory Guide 1.37, Quality Assurance Requirements for Cleaning of Fluid Systems and Associated Components of Water-Cooled Nuclear Power Plants, and American National Standards Institute (ANSI) Standard N45.2.1-1973, Cleaning of Fluid Systems and Associated Components for Nuclear Power Plants. Onsite cleaning and cleanliness control also follow the guidance of Regulatory Guide 1.37 as discussed in section 1.9. Cleaning process specifications are discussed in paragraph 5.2.3.4.

The fracture toughness of the materials is discussed in paragraph 5.2.3.3. Adequate fracture toughness of ferritic materials in the RCPB is provided by compliance with 10 CFR 50, Appendix G, Fracture Toughness Requirements, and Paragraph NB-2300 of Section III of the ASME Code, and by meeting the requirements of General Design Criteria 1, 14, 15, and 31.

5.4.2.4.2 Steam Generator Design Effects on Materials

Several features have been introduced into the Model F steam generator to minimize the deposition of contaminants from the secondary-side flow. Such deposits could otherwise produce a local environment in which adverse conditions could develop and result in material corrosion. The support plates are made of corrosion resistant stainless steel 405 alloy and incorporate a four-lobe-shaped tube hole design that provides greater flow area adjacent to the tube outer surface and eliminates the need for interstitial flow holes. The resulting increase in flow provides higher sweeping velocities at the tube/tube support plate intersections. These increased sweeping velocities reduce the potential for sludge deposition on the tube support plates. Historically, sludge removal from the tube support plates has not been performed. Figure 5.4.2-2 is an illustration of

the quatrefoil broached holes. This modification in the support plate design is a major factor contributing to the increased circulation ratio. The increased circulation results in increased flow in the interior of the bundle, as well as increased horizontal velocity across the tube sheet, which reduces the tendency for sludge deposition. The effect of the increased circulation on the vibrational stability of the tube bundle has been analyzed with consideration given to flow-induced excitation frequencies. The unsupported span length of tubing in the U-bend region and the corresponding optimum number of antivibration bars has been determined. The antivibration bars are fabricated from square Inconel barstock which is then chromium treated to improve frictional characteristics. Because of the increased circulation ratio, the moisture separating equipment has been modified to maintain an adequate margin with respect to the moisture carryover. To provide added strength as well as resistance to vibration, the quatrefoil tube support plate thickness has been increased. In addition, either 8 or 12 peripheral supports provide stability to the plates so that tube fretting or wear due to flow-induced plate vibrations at the tube support contact regions is minimized. For the top tube support plate, there is a continuous ring to distribute the lateral loads.

Assurance against significant flow-induced tube vibration is provided by a combination of analysis and testing.

Combining both vortex shedding and turbulence effects in a conservative manner, the maximum predicted local tube wear depth over a 40-year operating design objective is less than 0.006 in. This value is considerably below the plugging limit for Model F steam generator tube.

5.4.2.4.3 Compatibility of Steam Generator Tubing with Primary and Secondary Coolants

As mentioned in paragraph 5.4.2.4.1, corrosion tests which subjected the steam generator tubing material, Inconel-600 (ASME SB-163), to simulated steam generator water chemistry have indicated that the loss due to general corrosion over the 40-year operating design objective is insignificant compared to the tube-wall thickness. Testing to investigate the susceptibility of heat exchanger construction materials to stress corrosion in caustic and chloride aqueous solutions has indicated that Inconel-600 has resisted general corrosion in severe operating water conditions. Many reactor years of successful operation have shown the same low general corrosion rates as indicated by the laboratory tests.

REFERENCES

1. DeRosa, P., et al., "Evaluation of Steam Generator Tube, Tube Sheet, and Divider Plate Under Combined LOCA Plus SSE Conditions," WCAP-7832, January 1974.

2. WCAP-10338, "Steam Generator Tube Plugging Margin Analysis for the Alvin W. Vogtle Nos. 1 and 2 Nuclear Plants," August 1983.

5.4.7 RESIDUAL HEAT REMOVAL SYSTEM

The residual heat removal system (RHRS) transfers heat from the reactor coolant system (RCS) to the nuclear service cooling water system via the component cooling water (CCW) system to reduce the temperature of the reactor coolant to the cold shutdown temperature at a controlled rate during the second part of normal plant cooldown and maintains this temperature until the plant is started up again.

Refer to subsection 9.2.2 for a description of the CCW system. Parts of the RHRS also serve as parts of the emergency core cooling system (ECCS) for accident mitigation (section 6.3).

In addition, the RHRS is used to transfer refueling water between the refueling cavity and the refueling water storage tank at the beginning and end of the refueling operations.

Nuclear plants employing the same RHRS design as the VEGP are given in section 1.3.

5.4.7.1 Design Bases

The RHRS design parameters are listed in table 5.4.7-1.

The following establishes a design bases supporting a 50°F/h cooling rate. The RHR system and support systems have been reviewed and evaluated to document the acceptability of an operational cooling rate of up to 100°F/h not to exceed 100°F in any 1 h period.

The RHRS is placed in operation approximately 2 to 4 hours after reactor shutdown, when the temperature and pressure of the RCS are approximately 350°F and 365 psig, respectively. Assuming that two heat exchangers and two pumps are in service and that each heat exchanger is supplied with 5000 gal/min CCW initially at 105°F, the RHRS is designed to reduce the temperature of the reactor coolant to 140°F within 20 h following reactor shutdown. Under these conditions, the time required to reduce the reactor coolant temperature from 350°F to 200°F is approximately 3 h. The heat load handled by the RHRS during the cooldown transient includes residual and decay heat from the core and reactor coolant pump heat. The design heat load is based on the decay heat fraction that exists at 20 h following reactor shutdown from an extended run at full power.

Assuming that only one heat exchanger and pump are in service and that the heat exchanger is supplied with CCW at 5000 gal/min and initially at 105°F, the RHRS is capable of reducing the temperature of the reactor coolant from 350°F to 200°F within approximately 30 h. The time required under these conditions

to reduce reactor coolant temperature from 350°F to 212°F is approximately 20 h. The RHRS is designed to be isolated from the RCS whenever the RCS pressure exceeds the RHRS design pressure. The RHRS is isolated from the RCS on the suction side by two motor-operated valves in series on each suction line. Each motor-operated valve is interlocked to prevent its opening if RCS pressure is greater than approximately 365 psig. The valves have a control room alarm which alerts the operators if one or both of the valves is not fully closed and the RCS pressure exceeds 420 psig. The RHRS is isolated from the RCS on the discharge side by two check valves in each return line. Also provided on the discharge side is a normally open motor-operated valve downstream of each RHRS heat exchanger. (These check valves and motor-operated valves are not considered part of the RHRS; they are shown as part of the ECCS. See drawing 1X4DB121.)

Each inlet line to the RHRS is equipped with a pressure relief valve designed to prevent RHRS overpressurization assuming the most severe overpressure transients. These relief valves protect the system from inadvertent overpressurization during plant startup, shutdown, and cold shutdown decay heat-removal operations.

Each discharge line from the RHRS to the RCS is equipped with a pressure relief valve designed to relieve the maximum possible backleakage through the valves isolating the RHRS from the RCS. These valves are considered part of the ECCS, as depicted in drawing 1X4DB120. Relief capacity of these valves is given in table 6.3.2-2.

The RHRS is designed for a single nuclear power unit and is not shared between units.

The RHRS is designed to be fully operable from the control room for normal operation except as described in paragraph 5.4.7.2.7. By nature of its redundant design, the RHRS is designed to accept all major component single failures, with the only effect being an extension in the required cooldown time. There are no motor-operated valves in the RHRS that are subject to flooding following a secondary side break or a LOCA. Although considered to be of low probability, spurious operation of a single motor-operated valve can be accepted without loss of function as a result of the redundant two-train design.

Missile protection, protection against dynamic effects associated with the postulated rupture of piping, and seismic design are discussed in section 3.5 and subsections 3.6.2 and 3.7.N.2, respectively.

At the beginning of plant startup, at least one RHR pump is operating, and a portion of the discharge flow may be directed to the CVCS.

This arrangement augments RCS pressure control during startup. When the reactor coolant pumps are started, the RHR pump is stopped. The thermal input of the reactor coolant pumps heats the reactor coolant inventory. Once the pressurizer steam bubble formation is complete, the RHRS is isolated from the RCS and aligned for operation as part of the ECCS.

5.4.7.2.3.2 Power Generation and Hot Standby Operation. During power generation and hot standby operation, the RHRS is not in service but is aligned for operation as part of the ECCS.

5.4.7.2.3.3 Plant Shutdown. Plant shutdown is defined as the operation that brings the plant from no-load temperature and pressure to cold conditions.

5.4.7.2.3.4 Normal Cold Shutdown. The initial phase of plant shutdown is accomplished by transferring heat from the RCS to the steam and power conversion system through the use of the steam generators.

When the reactor coolant temperature and pressure are reduced to approximately 350°F and 365 psig, approximately 2 to 4 hours after reactor shutdown, the second phase of cooldown starts with the RHRS being placed in operation.

Startup of the RHRS includes a warmup period, during which time reactor coolant flow through the heat exchangers is limited to minimize thermal shock. The rate of heat removal from the reactor coolant is manually controlled by regulating the coolant flow through the residual heat exchangers. By adjusting these control valves downstream of the residual heat exchangers, the mixed mean temperature of the return flows is controlled. Coincident with the manual adjustment of flow through the heat exchangers, each heat exchanger bypass valve is automatically regulated to give the required total flow.

The reactor cooldown rate is limited by RCS equipment cooling rates based on allowable stress limits and the operating temperature limits of the CCW system. As the reactor coolant temperature decreases, the reactor coolant flow through the residual heat exchangers is increased by adjusting the control valve in each heat exchanger's tube side outlet line.

Should both RHR heat exchanger outlet and bypass flow control valves fail simultaneously (i.e., loss of instrument air), then the maximum cooldown rate may be increased. The maximum cooldown rate depends on many factors, including the time of failure, the RHR flowrate, the CCW flowrates and temperatures, and other heat loads on the CCW system. One of the key factors is the RCS water temperature, since the cooldown rate depends upon the temperature difference between the RHR (RCS) flow and the CCW flow in the RHR heat exchanger. Even with the maximum flow through the RHR heat exchangers, it is typically impossible to maintain a cooldown rate as high as the technical specification design rate of 100°F/h when the RCS temperature is less than 250°F. The operator can significantly limit the cooldown rate by merely stopping one of the RHR pumps.

During plant shutdown, pressurizer steam bubble operation is maximized to control RCS pressure. When the RHRS is in operation, RCS control is augmented by regulating the charging flowrate and the rate of letdown from the RHRS to the CVCS.

After the reactor coolant pressure is reduced and the temperature is 140°F or lower, the RCS may be opened for refueling or maintenance.

A failure modes and effects analysis for normal cooldown operations is provided in table 5.4.7-3.

5.4.7.2.3.5 Safety-Grade Cold Shutdown. It is expected that the systems normally used for cold shutdown will be available anytime the operator chooses to perform a reactor cooldown. However, to ensure that the plant can be taken to cold shutdown at anytime, the safety-grade cold shutdown design enables the RCS to be taken from no-load temperature and pressure to cold conditions using only safety-grade systems, with only onsite or offsite power available, and assuming the most limiting single failure.

Should portions of normal shutdown systems be unavailable, the operator will maintain the plant in a hot standby condition while making those normal systems functional. Local manual actions are performed as described in table 5.4.7-4. Appropriate procedures are provided for the use of safety-grade backups contingent upon the inability to make normal systems available. The operator should use any of the normal systems that are available in combination with the safety-grade backups for the systems that cannot be made operable. The safety-grade provisions are to be used only upon the inability to make available the equipment normally used for the given function.

The RHRS operation for normal conditions, even with a major failure, is accomplished completely from the control room except as described in paragraph 5.4.7.2.7. The redundancy in the RHRS design provides the system with the capability to maintain its cooling function, even with a major single failure such as failure of a pump, valve, or heat exchanger, since the redundant train can be used for continued heat removal.

Status-indicating lights are provided at the control board for the RHR pump, the RHRS suction isolation valves, and the miniflow isolation valves.

The major portion of the RHRS is located in the auxiliary building. Leakages resulting from a passive failure of the RHRS piping are collected by the floor drain system. See subsection 9.3.3 for a discussion of this system and the alarms and instrumentation provided to detect any radioactive leaks, should they occur.

5.4.7.2.7 Manual Actions

The RHRS is designed to be fully operable from the control room for normal operation except for restoring power to the suction isolation valves, and for restoring air to the heat exchanger flow control valves prior to RHR initiation. Manual operations required of the control room operator are restoring power to and opening the suction isolation valves, restoring air to and positioning the flow control valves downstream of the residual heat exchangers, and starting the RHR pumps. The power lockout of the suction isolation valves is discussed in subsection 7.6.2. The air is isolated from the RHR heat exchanger flow control valves by closing the air supply isolation valve. During normal cooldown, there is adequate time and accessibility to perform these actions. Refer to paragraph 6.3.2.8 for the manual actions required during ECCS operations.

5.4.7.3 Performance Evaluation

The performance of the RHRS in reducing reactor coolant temperature is evaluated through the use of heat balance calculations on the RCS, RHRS, and CCW system at stepped intervals following the initiation of removal operation. Heat removal through the RHR and component cooling heat exchangers is calculated at each interval by use of standard water-to-water heat exchanger performance correlations; the resultant fluid temperatures for the RCS, RHRS, and CCW system are calculated and used as input to the next interval's heat balance calculation.

Assumptions utilized in the series of heat balance calculations describing plant RHRS cooldown are as follows:

A. RHR operation is initiated 4 h after reactor shutdown.[1]

B. RHR operation begins at a reactor coolant temperature of 350°F.

C. Thermal equilibrium is maintained throughout the RCS during the cooldown (i.e., one reactor coolant pump in operation whenever the reactor coolant temperature is above 160°F).

D. CCW temperature during cooldown is limited to a maximum of 120°F.

E. RCS cooldown rates of 50°F/h are not exceeded.[1]

Cooldown curves calculated using this method are provided in figure 5.4.7-3.

[1]This value is used in design bases criteria and analyses to support the plant maximum cold shutdown condition. The RHR system and support systems have been reviewed and evaluated to document the acceptability of an operational cooling rate up to 100°F/h.

5.4.7.4 Preoperational Testing

Preoperational testing of the RHRS is addressed in chapter 14.

5.4.7.5 Reliability Tests and Inspections

As the RHRS functions as part of the ECCS, periodic tests and inspections are conducted in conjunction with those conducted on ECCS components. (See paragraph 6.3.4.2 for a discussion of the tests and inspections. See the Technical Specifications for the selection of test frequency, acceptability of testing, and measured parameters. A description of the inservice inspection program is included in section 6.6.)

MODES OF OPERATION

MODE A INITIATION OF RHR OPERATION

When the reactor coolant temperature and pressure are reduced to 350°F and 365 psig, approximately 2 to 4 hours after reactor shutdown, the second phase of plant cooldown starts with the RHRS being placed in operation. Before starting the pumps, the inlet isolation valves are opened, the heat exchanger flow control valves are set at minimum flow, and the outlet valves are verified open. The automatic miniflow valves are open and remain so until the pump flow exceeds the closed setpoint (1405 gpm at 350°F, 1326 gpm at 100°F), at which time they trip closed. Should the pump flow drop below the open setpoint (751 gpm at 350°F, 709 gpm at 100°F), the miniflow valves open automatically.

Startup of the RHRS includes a warmup period, during which reactor coolant flow through the heat exchangers is limited to minimize thermal shock on the RCS. The rate of heat removal from the reactor coolant is controlled manually by regulating the reactor coolant flow through the residual heat exchangers. The total flow is regulated automatically by control valves in the heat exchanger bypass line to maintain a constant total flow. The cooldown rate is limited to 100°F/h based on equipment stress limits and a 120°F maximum component cooling water temperature.

MODE B END CONDITIONS OF A NORMAL COOLDOWN

This situation characterizes most of the RHRS operation. As the reactor coolant temperature decreases, the flow through the residual heat exchanger is increased until all of the flow is directed through the heat exchanger to obtain maximum cooling.

NOTE

For the safeguards functions performed by the RHRS, refer to section 6.3.

REV 9 5/00
REV 7 9/97
REV 5 9/95

B. Boric acid spray reacts with zinc, oxidizing it and liberating hydrogen gas. The use of zinc in the containment is minimized to reduce generation of hydrogen.

Table 6.2.5-6 contains a list of the amounts of aluminum and zinc which are expected to be present in the containment and which could potentially be exposed to a corrosive environment. These materials are listed by the system or component in which they are used, and an estimate of their expected corrosion rate is given.

The use of mercury and mercuric compounds is prohibited inside the containment. Temporary use of fluorescent and high-pressure sodium lamps is permitted during refueling outages/plant shutdowns during Modes 5 and 6 only. Usage during these times is administratively controlled.

6.1.1.1.3 Integrity of Safety-Related Components

The integrity of the materials of construction for ESF equipment when exposed to post-DBA conditions have been evaluated. Post-DBA conditions were conservatively represented by test conditions. The test program[1] considered spray and core cooling solutions of the design chemical compositions, as well as the design chemical compositions contaminated with corrosion and deterioration products which may be transferred to the solution during recirculation. The effects of sodium (free caustic), chlorine (chloride), and fluorine (fluoride) on austenitic stainless steels were considered. Based on the results of this investigation, as well as testing by Oak Ridge National Laboratory and others, the behavior of austenitic stainless steels in the post-DBA environment is acceptable. No cracking is anticipated on any equipment even in the presence of postulated levels of contaminants, provided the core cooling and spray solution Ph is maintained at an adequate level. The inhibitive properties of alkalinity (hydroxyl ion) against chloride cracking and the inhibitive characteristic of boric acid on fluoride cracking have been demonstrated.

The selection, procurement, testing, storage, and installation of all nonmetallic thermal insulation ensures that the leachable concentrations of chloride, fluoride, sodium, and silicate are in conformance with Regulatory Guide 1.36, Nonmetallic Thermal Insulation for Austenitic Stainless Steel.

Conformance with Regulatory Guide 1.36 is summarized in section 1.9.

Information is provided in section 1.9 concerning the degree of conformance with the following Regulatory Guides:

A. 1.31, Control of Ferrite Content in Stainless Steel Weld Metal.

B. 1.36, Nonmetallic Thermal Insulation for Austenitic Stainless Steel.

C. 1.37, Quality Assurance Requirements for Cleaning of Fluid Systems and Associated Components of Water-Cooled Nuclear Power Plants.

D. 1.44, Control of the Use of Sensitized Stainless Steel.

6.1.1.2 Composition, Compatibility, and Stability of Containment and Core Spray Coolants

The information given below is provided on the composition, compatibility, and stability of the core cooling water and the containment sprays of the ESF.

Supply for the containment sprays and ECCS is drawn from the refueling water storage tank. As described in sections 3.8 and 6.3, the refueling water storage tank is a stainless steel-lined concrete tank not subject to significant corrosive attack by the tank's contents. Trisodium phosphate for recirculation fluid pH adjustment is stored in baskets located in the containment.

The accumulator tanks, which store boric acid solution (1900-2600 ppm) for the accumulator portion of the safety injection system, are made of carbon steel and clad with stainless steel to ensure corrosion resistance.

The boron injection tank (Unit 1 only) is stainless steel. Because of the corrosion resistance of this material, significant corrosive attack on the vessel is not expected. The boron injection tank contains a boron concentration, as boric acid, of 0-2600 ppm.

6.2.1.6 Instrumentation Requirements

Adequate instrumentation is provided to monitor the conditions inside the containment and actuate the appropriate engineered safety features, should those conditions exceed the predetermined levels. The instruments measure the containment pressure, containment atmosphere radioactivity, purge exhaust effluent radioactivity, and containment hydrogen concentration.

The containment pressure is measured by four independent Q-class pressure transmitters and fed into the engineered safety features actuation system (ESFAS) as described in subsection 7.3.1. Upon detection of excessively high pressure inside the containment, the appropriate safety actuation signals are generated which automatically activate the necessary safety systems. These physically separated pressure transmitters are located outside the containment and connected to their sensors by filled and sealed hydraulic lines. Refer to section 7.3 for a detailed description.

The containment atmosphere radiation level is monitored by four independent Q-class area monitors located at the operating deck inside the containment building. The measurements of monitors RE-0002 and RE-0003 are continuously fed into the ESFAS logic and, in modes 1 through 4, cause the actuation of containment ventilation isolation (CVI) safety signals, should the measured radiation levels exceed their setpoints. In mode 6 during core alterations or movement of irradiated fuel assemblies in containment, two channels of radiation monitors are required operable to provide input to control room alarms to ensure prompt operator action to manually close the containment purge and exhaust valves. In addition, the containment purge exhaust air radiation is measured by a non-Q-class, three-channel airborne effluent monitor located outside the containment in the purge exhaust duct. Its isolated output is also fed into the ESFAS logic and, in modes 1 through 4, causes actuation of the CVI signal when the monitored radiation level exceeds the setpoint. In mode 6 during core alterations or movement of irradiated fuel assemblies, only operable radiation monitors are required to alert the operators of the need for containment ventilation isolation. Manual isolation using individual valve hand switches following a radiation alarm is the means for isolating containment in the event of a fuel handling accident during shutdown. For detailed information on the containment area radiation monitors, effluent monitor, and the ESFAS operation, refer to subsections 12.3.4 and 11.5.2 and section 7.3, respectively.

The containment hydrogen concentration is measured by two redundant Q-class hydrogen monitors as described in subsection 6.2.5. The readouts and alarms are provided in the control room to facilitate manual actuation of safety-related hydrogen control systems by the operator, should it become necessary.

REFERENCES

1. Bordelon, E. T., Murphy Containment Pressure Analysis Code (COCO), WCAP 8326, July 1974.

2. Tagami, Takashi, "Interim Report on Safety Assessments and Facilities, Establishment Project in Japan for Period Ending June, 1965 (No. 1)."

3. Ranz, E. W., and Marshall, W. R., Jr., "Evaporation for Drops." Chemical Engineering Progress, 48141-146, March 1952.

4. Parsly, L. F., "Spray Tests at the Nuclear Safety Pilot Plant," in "Nuclear Safety Program Annual Progress Report for Period Ending December 31, 1971," ORNL 4647, p. 182, Oak Ridge National Laboratory, 1971.

5. Shepard, R. M., et al. "Westinghouse Mass and Energy Release Data for Containment Design," WCAP-8264-PA, June 1975 (Proprietary) and WCAP-8312-A, Revision June 1975 (Nonproprietary).

6. Land, R. E., "Mass and Energy Releases Following a Steam Line Rupture," WCAP-8822, (Proprietary) and WCAP-8860 (Nonproprietary), September 1976.

7. Burnett, T. W. T., et al., "LOFTRAN Code Description," WCAP-7907-A, April 1984.

8. Bordelon, F. M., and Murphy, E. T., Containment Pressure Analysis Code (COCO) WCAP-8326, June 1974.

9. Shepard, R. M., et al., "Westinghouse Mass and Energy Release Data for Containment Design," WCAP-8264-P-A, June 1975 (Proprietary), and WCAP-8312-A, Revision 2, August 1975 (Nonproprietary).

10. WCAP-10325-A "Westinghouse LOCA Mass and Energy Release Model for Containment Design - March 1979 Version," April 1979.

11. "Westinghouse ECCS Evaluation Model - 1981 Version," WCAP-9220-P-A, Rev. 1, February 1982 (Proprietary), WCAP-9221-A, Rev. 1.

12. EPRI 294-2, "Mixing of Emergency Core Cooling Water with Steam 1/3 Scale Test and Summary," (WCAP-8423), Final Report, June 1975.

13. ANSI/ANS-5.1-1979, "American National Standard for Decay Heat Power in Light Water Reactors," August 1979.

14. NUREG-1137, "Safety Evaluation Report related to the Operation of Vogtle Electric Generating Plant, Units 1 and 2," Docket Nos. 50-424 and 50-425, Page 3-25, June 1985.

15. WCAP-10033, "Dynamic Analysis of Reactor Pressure Vessel For Postulated Loss-of-Coolant Accidents: Alvin W. Vogtle Nuclear Plant Units 1 and 2," pages 3-22, 3-23, 4-4, and 5-1, December 1981.

16. NUREG-1137, Supplement 7, "Safety Evaluation Report related to the Operation of Vogtle Electric Generating Plant, Units 1 and 2," Docket Nos. 50-424 and 50-425, January 1988.

17. Letter from T. A. Reed, of the NRC, to W. G. Hairston III, of the Georgia Power Company, "Vogtle Unit 1 Safety Evaluation on Pressurizer Surge Line Thermal Stratification (NRC Bulletin 88-11) (TAC 72178)," April 12, 1990.

TABLE 6.2.1-72 (SHEET 2 OF 2)

Wall	Material	Thickness (ft)	Area (ft^2)
11	Zinc coating Carbon steel	0.00020833 0.041667	101266.4
12	Zinc coating Carbon steel	0.00020833 0.10417	30474.2[a]
13	Stainless steel	0.008333	75041.0
14	Stainless steel	0.09375	232.0[b]
15	Stainless steel	0.04425	1259.4
16	Epoxy Concrete Concrete	0.001125 0.5 6.833	44202.0
17	Epoxy Concrete Concrete	0.000875 0.5 3.5	19550.3
18	Zinc coating Carbon steel Concrete Concrete	0.00020833 0.08333 0.5 4.0	1546.8
19	Epoxy Concrete Concrete	0.001125 0.5 4.0	2215.4
20	------	-----	-----

a. Add 300 ft^2 (approx.) of carbon steel with a thickness of 0.125 ft for the Units 1 and 2 permanent reactor head shields (PHS). The addition of this heat sink has been accounted for as shown in table 15.6.5-2. The quantity of inorganic zinc paint will not change since it will be replacing the existing coating on the shroud which is being removed.

b. Add 400 ft^2 of stainless steel at a modeled thickness of 0.068 ft for the Unit 2 refueling canal stairway. The addition of this heat sink has been evaluated to have no affect on PCT values of table 15.6.5-2.

Stress corrosion does not present a problem since it only becomes a factor under a combination of conditions of high stress levels at high temperatures for extended periods of time. The stress levels in the pumps during operation are relatively low; the working temperature of the pumps is less than 212°F.

The pumps are located outside the containment. The external surfaces of the pumps, as well as the pump motors, are not subjected to the corrosive atmosphere of the spray solution. Only the internal stainless steel surfaces of the pumps are exposed to a corrosive atmosphere.

6.2.2.2.2.3.1 Refueling Water Storage Tank. This tank serves as a source of emergency borated cooling water for injection and containment spray. It is normally used to fill the refueling canal for refueling operations. During all other plant operating periods, it is aligned to the suction of the emergency core cooling pumps and the containment spray pumps. The tank is a concrete tank lined with type 304 stainless steel plates. The nominal tank volume is 715,000 gal. The contents of this tank are protected from freezing by a sludge mixing system which includes an electric circulation heater. Lines and appurtenances to the RWST serving a safety-related function are heat traced as necessary to prevent freezing.

6.2.2.2.2.3.2 Containment Spray Pumps. The containment spray pumps are of the horizontal centrifugal type, driven by electric motors powered from the emergency buses.

The design head of the pumps is sufficient to continue at rated capacity with a minimum level in the RWST against a head equivalent to the sum of the design pressure of the containment, the head to the uppermost nozzles, line losses, and nozzle pressure losses. The containment spray system is designed so that adequate net positive suction head (NPSH) is provided to the containment spray pumps, in accordance with Regulatory Guide 1.1.

To demonstrate that adequate NPSH is provided for the containment spray pumps, it is only necessary to demonstrate that the NPSH is adequate under the worst limiting conditions. NPSH for the containment spray pumps is evaluated for both the injection and recirculation modes of operation for the DBA. The recirculation mode of operation gives the limiting NPSH requirement for the containment spray pumps, and the NPSH available is determined from the following equation:

$$NPSH_{actual} = (h)_{containment\ pressure} - (h)_{vapor\ pressure} + (h)_{static\ head} - (h)_{loss}$$

To evaluate the adequacy of the available NPSH, the debris generation from a high energy line break within the containment and the resultant impact on the containment spray pump performance was evaluated using the following (see reference 1).

A. The minimum flood level inside the containment based on the RWST water discharged during injection and switchover to recirculation, plus the water volume of 3 accumulator tanks, is at 177 ft 0 in. The minimum flood level also takes into account the flooding of the reactor cavity/incore instrument tunnel via the penetrations in the primary shield.

B. The containment spray pump suction elevation is 121 ft 5 in.

C. The calculated maximum line losses which include losses through pipe fittings, valves, entrance and exit are 10.3 ft at 3200 gal/min, containment spray pump design flow.

D. The quantity of insulation debris generated by the double-ended rupture of the RCS hot leg at its connection to the steam generator, the limiting case, is 172.0 ft^3.

E. Hydraulic model studies (reference 2) performed on a scale model of the VEGP containment emergency sump configuration showed that the approach velocities to the four sumps during two train operation was essentially the same. Therefore, it is assumed that the volume of debris transported and deposited on one sump screen is one quarter of the total debris generated by the postulated pipe break event.

However, the volume of debris transported to the sumps is also evaluated as a pump flow-weighted ratio. The most limiting case is reflected in paragraph 6.2.2.2.2.3.2.

F. The maximum containment spray emergency sump screen head loss, assuming 25 percent of the total debris generated is evenly deposited on the trash guard-screen cage, is 14.9 ft.

G. The vapor pressure of the pumped liquid is assumed to be in equilibrium with the containment ambient pressure (i.e., no credit is taken for subcooling of the sump fluid):

$$h_{\text{containment ambient pressure}} = h_{\text{vapor pressure}}$$

The NPSH equation for the recirculation mode when suction is taken from the containment emergency sump becomes:

$$NPSH_{\text{available}} = h_{\text{static head}} - h_{\text{line loss}} - h_{\text{sump screen loss}}$$

Using the above values, the calculated containment spray pump available NPSH is 30.3 ft. The required NPSH at 3200 gal/min is 19.5 ft. Therefore, adequate available NPSH margin is provided for proper containment spray pump operation.

Design parameters for these pumps are presented in table 6.2.2-4.

6.2.2.2.2.3.3 Spray Nozzles. The hollow cone spray nozzles are not subject to clogging by particles less than 1/4 in. in size and produce a drop size spectrum with a mean diameter of less than 700 mm at 40 psi differential pressure. During spray recirculation operation, the water is screened through a 1/8-in. mesh before leaving the containment emergency sump. With the spray pump operating at design conditions and the containment at design pressure, the pressure drop provided across the nozzles exceeds 40 psi. The spray nozzles used in the construction of the containment spray system are designed to withstand differential pressures in excess of those expected to occur as a result of an accident.

The spray nozzles are stainless steel and have a 3/8-in.-diameter orifice.

6.2.2.2.2.3.4 Spray Additive Tank. The spray additive tank has been abandoned in place.

6.2.2.2.2.3.5 Spray Additive Eductors. The spray additive eductors serve only to maintain the spray system pressure boundary integrity.

6.2.2.2.2.3.6 Piping, Valves, and Containment Sumps. The piping used in the construction of the containment spray system is designed to withstand differential pressures in excess of those expected to occur as a result of an accident. The containment sump recirculation lines that run from the containment sump to the containment spray pumps are enclosed within guard pipes from the containment emergency sump floor to the first valve outside the containment. The pipe and guard pipe are capable of withstanding containment pressure and temperature. The guard pipe prevents leakage from the containment if the recirculation line ruptures.

The two containment ECCS sumps are designed in accordance with the requirements of Regulatory Guide 1.82. These sumps are located in a manner that protects them from the effects of high-energy line breaks, and they are separated from each other. The elevation of the containment emergency sumps are selected to allow optimum use of the available coolant. The sump intakes are protected by trash guards and fine mesh screens. The size of the opening in the screens is based on the minimum flow area through the components that receive coolant from the emergency sumps.

Analyses were conducted to ensure that effects such as vortexing, reduction of NPSH, and screen blockage will not result in degraded pump or system performance. The trash racks and screens are installed in a manner to facilitate inspection of the structures and pump suction intakes.

A separate screened intake for each containment spray pump is provided. The outer square screen cage and the outer trash guard are 5 ft x 5 ft x 2 ft 8 in., consisting of 1 1/4-in. x 3/16-in. grating spaced vertically on 1 3/16-in. centers. A wire woven screen with maximum width openings of 1/8 in. is welded to the inner portion of the outer trash guard. The octagonal grating cage located within the outer trash guard is 2 ft 8 in. on diagonals and 2 ft high with 1 1/4-in. x 3/16-in. grating spaced vertically on 1 3/16-in. centers. Because of these dimensions, it is not considered credible that a screen can plug sufficiently to impede pump suction. In the remote case that particles did traverse the screen, they would pass through the piping pumps and valves as well as the 3/8-in. containment spray nozzle openings without difficulty. The screens bolt to the floor and may be removed by unbolting individual screen sections for inspection during shutdown periods.

Water sprayed in the refueling canal from the containment sprays may escape back to the elevation of the emergency sump through two 12-in. drain pipes located at the lowest point of the refueling canal. The water passes from the canal to a passageway on the sump floor. Spray water from 33 out of 171 nozzles during 1-train operation or a maximum of 66 out of a total of 342 nozzles from 2 containment spray trains in operation falls into the refueling canal for a maximum canal fill rate of approximately 500 gal/min and 1000 gal/min, respectively. This represents less than 20 percent of the total spray rate in either case.

The drain layout is such that each 12-in. drain line is capable of passing approximately 2000 gal/min; therefore, there is no danger of starving the sump via the refueling canal. The drain piping is isolated during refueling and left open during normal reactor operation. Plant refueling procedures ensure that these drain pipes are opened after refueling prior to plant startup.

6.2.4 CONTAINMENT ISOLATION SYSTEM

The containment isolation system consists of the piping, valves, and actuators required to isolate the containment following a loss-of-coolant accident (LOCA), steam line rupture, fuel handling accident inside the containment, small breaks in the reactor coolant system (RCS), or releases of radioactivity from systems within the containment. The design of the containment isolation system satisfies the requirements of TMI Action Plan Task II.E.4.2 as described in the following paragraphs.

6.2.4.1 Design Bases

Protection of the containment isolation system from wind and tornado effects is discussed in section 3.3. Flood design is discussed in section 3.4. Missile protection is discussed in section 3.5. Protection against dynamic effects associated with the postulated rupture of piping is discussed in section 3.6. Environmental design is discussed in section 3.11.

6.2.4.1.1 Safety Design Bases

A. In the event of a LOCA, the containment isolation system provides isolation of lines penetrating the containment which are not required for operation of the engineered safety features (ESF) systems to minimize the release of radioactive materials to the atmosphere.

B. Upon failure of a main steam line, the containment isolation system isolates the steam generators as required to prevent excessive cooldown of the RCS or overpressurization of the containment.

C. To control the release of radioactivity to the outside atmosphere, the containment isolation system isolates the containment atmosphere following a fuel handling accident inside the containment.

   During refueling operations, manual containment ventilation isolation (CVI) is permitted, along with open personnel and emergency air lock doors. Manual CVI capability, using individual valve hand switches, is performed during these refueling operations as described in paragraph 6.2.4.5.

D. The containment isolation system is designed in accordance with 10 CFR 50, Appendix A, General Design Criterion 54.

E. Each line which penetrates the containment and which either is a part of the reactor coolant pressure boundary (RCPB) or connects directly to the containment atmosphere or does not meet the requirements for a closed system as defined in item F below, except instrument sensing lines, is provided with containment isolation valves in accordance with 10 CFR 50, Appendix A, General Design Criteria 55 and 56.

F. Each line which penetrates the containment and is neither part of the RCPB nor connected directly to the atmosphere of the containment and which satisfies the requirements of a closed system is provided a containment isolation valve in accordance with 10 CFR 50, Appendix A, General Design Criterion 57. A closed system is not a part of the RCPB nor connected directly to the atmosphere of the containment and meets the following additional requirements:

1. The system is protected against missiles and the effects of high energy line break.

2. The system is designed to Seismic Category 1 requirements.

3. The system is designed to American Society of Mechanical Engineers Section III, Class 2 requirements.

4. The system is designed to withstand temperatures at least equal to the containment design temperature.

5. The system is designed to withstand the external pressure from the containment structural acceptance test.

6. The system is designed to withstand the design basis accident transient and environment.

G. The containment pressure transmitters and reactor vessel level instrumentation system (RVLIS) are designed in accordance with Nuclear Regulatory Commission (NRC) Regulatory Guide 1.141. Six containment pressure sensors are provided as sealed systems with bellow seals inside the containment, liquid filled capillaries between the seals, and the sensing element outside containment. RVLIS consists of six level sensors and has bellow seals inside the containment, liquid filled capillaries between the seals, and a secondary isolator seal outside the containment between the containment penetration and the transmitter. These instrument lines are closed systems

For those valves for which automatic closure is not desired, based on the system safety function, remote-manual operation is available from the control room.

Containment isolation valves which are equipped with power operators and which are automatically actuated may also be controlled individually by positioning hand switches in the control room. Also, in the case of certain valves with actuators, a manual override of an automatic isolation signal is installed to permit manual control of the associated valve. The override control function can be performed only subsequent to resetting of the actuation signal; that is, deliberate manual action is required to change the position of containment isolation valves in addition to resetting the original actuation signal. The design does not allow ganged reopening of the containment isolation valves. Reopening of the isolation valves must be performed on a valve-by-valve basis, or on a line-by-line basis. Safety injection signals take precedence over manual overrides of other isolation signals, for example, a safety injection signal causes isolation valve closure even though the high radiation signal is being overridden by the operator. Overrides are input to the system status monitoring panel, described in subsection 7.5.5. Containment isolation valves with power operators are provided with open/closed indication, which is displayed in the control room. The valve mechanism also provides a local, mechanical indication of valve position.

In mode 6 during core alterations and movement of irradiated fuel assemblies inside containment, automatic or system-level manual initiation CVI capability no longer applies. During these refueling operations, manual containment ventilation isolation is permitted, along with open personnel and emergency air lock doors. Manual CVI capability, using individual valve hand switches, is performed during these refueling operations. The following conditions apply:

- One personnel air lock door and one emergency air lock door must be operable, and
- At least 23 feet of water is maintained above the reactor vessel flange, and
- A designated individual is available to close the doors. The emergency air lock will not normally be open during core alterations or fuel movement inside containment. Therefore, in the event the emergency air lock is open at the same time the personnel air lock is open, a separate individual shall be responsible for closing the emergency air lock (within 15 minutes) in addition to the individual designated to close the personnel air lock.

All power supplies and control functions necessary for containment isolation are Class 1E, as described in chapters 7 and 8.

TABLE 6.2.4-1 (SHEET 9 OF 17)

Penetration Number	GDC or RG	System Name	Fluid	Line Size (in.)	ESF or Support Systems	Drawing Number	Valve Arrangement Fig. 6.2.4-1.	Valve Number	Location Relative to Containment Inside/ Outside	Type Tests	Length of Pipe (ft-in.)	Valve Type	Valve Operator	Essential or Nonessential	Actuation Mode Primary	Actuation Mode Secondary	Valve Position Normal	Valve Position Shutdown	Valve Position Post-Accident	Power Failure	Actuation Signal	Valve Closure Time (s)	Power Source 1E Bus A or B	Normal Direction of Flow
48	54	Normal letdown line	Primary coolant	3	No	1X4DB114	7	HV-8160	In	C	-	Globe	Air	N	Auto	Remote man.	O	O	C	FC	CIA	15	A	Out
				3				HV-8152	Out		4'-5"	Globe	Air	N	Auto	Remote man.	O	O	C	FC	CIA	15	B	
				0.75				502[h(c)]	Out		-	Globe	Manual	N	Manual	None	C	C	C	NA	NA	NA	NA	
49	54	Excess letdown and seal water leakoff	Primary coolant	2	No	1X4DB114	31	HV-8100	Out	C	2'-4"	Globe	Elec. motor	N	Auto	Remote man.	O	O	C	FAI	CIA	15	B	Out
				2				HV-8112	In		-	Globe	Elec. motor	N	Auto	Remote man.	O	O	C	FAI	CIA	15	A	
				0.75				021	In		-	Check	Self	N	Auto	None	-	-	-	NA	NA	NA	NA	
50	54	Normal charging line	Primary coolant	3	No	1X4DB114	33	HV-8105	Out	C	3'-0"	Gate	Elec. motor	N	Auto	Remote man.	O	O	C	FAI	SI	17[m]	B	In
				3				032	In		-	Check	Self	N	Auto	None	-	-	-	NA	NA	NA	NA	
				0.75				465	In		-	Globe	Manual	N	Manual	None	C	C	C	NA	NA	NA	NA	
51	54	Reactor coolant pump seal water supply (pump loop No. 4)	Primary coolant	1.5	Yes	1X4DB114	32	HV-8103D	Out	A	1'-3"	Globe	Elec. motor	E	Remote man.	Manual	O	O	O	FAI	Remote man.	NA	B	In
				1.5				355	In		-	Check	Self	E	Auto	None	-	-	-	NA	NA	NA	NA	
				0.75				452	In		-	Globe	Manual	N	Manual	None	C	C	C	NA	NA	NA	NA	
52	54	Reactor coolant pump seal water supply (pump loop No. 3)	Primary coolant	1.5	Yes	1X4DB114	32	HV-8103C	Out	A	1'-3"	Globe	Elec. motor	E	Remote man.	Manual	O	O	O	FAI	Remote man.	NA	B	In
				1.5				354	In		-	Check	Self	E	Auto	None	-	-	-	NA	NA	NA	NA	
				0.75				451	In		-	Globe	Manual	N	Manual	None	C	C	C	NA	NA	NA	NA	
53	54	Reactor coolant pump seal water supply (pump loop No. 2)	Primary coolant	1.5	Yes	1X4DB114	32	HV-8103B	Out	A	1'-4"	Globe	Elec. motor	E	Remote man.	Manual	O	O	O	FAI	Remote man.	NA	B	In
				1.5				353	In		-	Check	Self	E	Auto	None	-	-	-	NA	NA	NA	NA	
				0.75				450	In		-	Globe	Manual	N	Manual	None	C	C	C	NA	NA	NA	NA	
54	54	Reactor coolant pump seal water supply (pump loop No. 1)	Primary coolant	1.5	Yes	1X4DB114	32	HV-8103A	Out	A	1'-4"	Globe	Elec. motor	E	Remote man.	Manual	O	O	O	FAI	Remote man.	NA	B	In
				1.5				004	In		-	Check	Self	E	Auto	None	-	-	-	NA	NA	NA	NA	
				0.75				449	In		-	Globe	Manual	N	Manual	None	C	C	C	NA	NA	NA	NA	
55	NA	Eddy current/sludge lancing	NA	0.75	No	1X4DB159-1	56[k]	X-018	Out	B	-	Globe	Manual	N	Manual	None	C	C	C	NA	NA	NA	NA	-
				10					In		-	Flange	NA	N		None	C	C	C	NA	NA	NA		NA
56	55	RHR pump discharge to hot leg	Borated water	12	Yes	1X4DB121	21	HV-8840(l)	Out	A	3'-0"	Gate	Elec. motor	E	Remote man.	Manual	C	C	O[b]	FAI	Remote man.	NA	B	In
				8		2X4DB121		128	In		-	Check	Self	E	Auto	None	-	-	-	NA	NA	NA	NA	
				8				129	In		-	Check	Self	E	Auto	None	-	-	-	NA	NA	NA	NA	
				0.75				HV-8825	In		-	Globe	Air	N	Auto	Remote man.	C	C	C	FC	CIA	15	B	
				0.75				112[b]	In		-	Globe	Manual	N	Manual	None	C	C	C	NA	NA	NA	NA	
				1				X-435	In		-	Globe	Manual	N	Manual	None	C	C	C	NA	NA	NA	NA	
				0.75				296[b]	In		-	Globe	Manual	N	Manual	None	C	C	C	NA	NA	NA	NA	
57	55	RHR loop into cold leg	Borated water	8	Yes	1X4DB121	30	HV-8809A	Out	A	2'-0"	Gate	Elec. motor	E	Remote man.	Manual	O	O	O[b]	FAI	Remote man.	NA	A	In
				6				147	In		-	Check	Self	E	Auto	None	-	-	-	NA	NA	NA	NA	
				6				148	In		-	Check	Self	E	Auto	None	-	-	-	NA	NA	NA	NA	
				0.75				111	In		-	Globe	Manual	N	Manual	None	C	C	C	NA	NA	NA	NA	
				0.75				HV-8890A	In		-	Globe	Air	N	Auto	Remote man.	C	C	C	FC	CIA	15	B	
58	55	RHR loop into cold leg	Borated water	8	Yes	1X4DB121	30	HV-8809B	Out	A	1'-10"	Gate	Elec. motor	E	Remote man.	Manual	O	O	O[b]	FAI	Remote man.	NA	B	In
				6				149	In		-	Check	Self	E	Auto	None	-	-	-	NA	NA	NA	NA	
				6				150	In		-	Check	Self	E	Auto	None	-	-	-	NA	NA	NA	NA	
				0.75				110	In		-	Globe	Manual	N	Manual	None	C	C	C	NA	NA	NA	NA	
				0.75				HV-8890B	In		-	Globe	Air	N	Auto	Remote man.	C	C	C	FC	CIA	15	B	
				1				X-410	In		-	Globe	Manual	N	Manual	None	C	C	C	NA	NA	NA	NA	

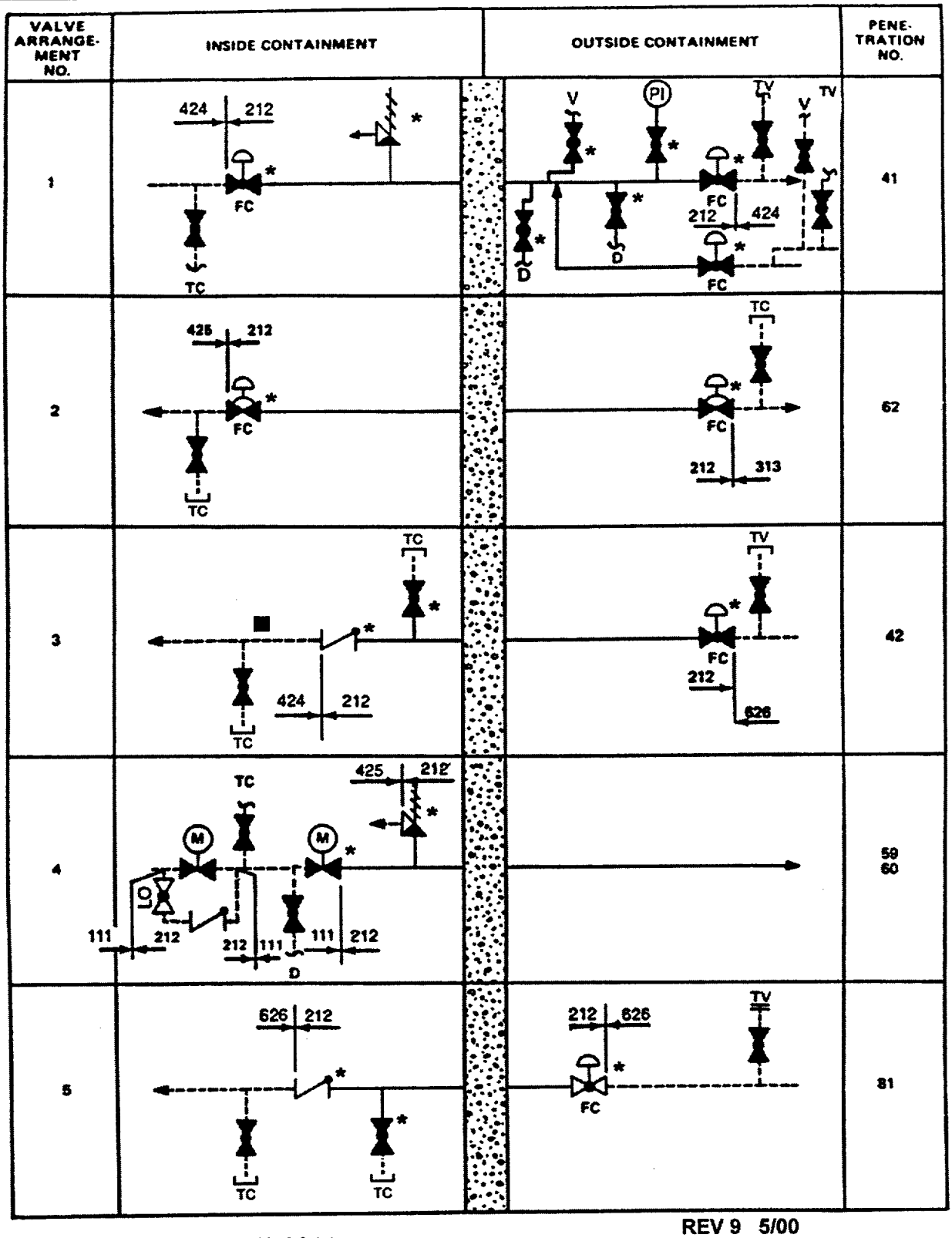

* Valve listed on table 6.2.4-1

REV 9 5/00
REV 8 10/98
REV 6 4/97
REV 4 4/94

VOGTLE ELECTRIC GENERATING PLANT UNIT 1 AND UNIT 2	VALVE ARRANGEMENT FIGURE 6.2.4-1 (SHEET 1 OF 13)

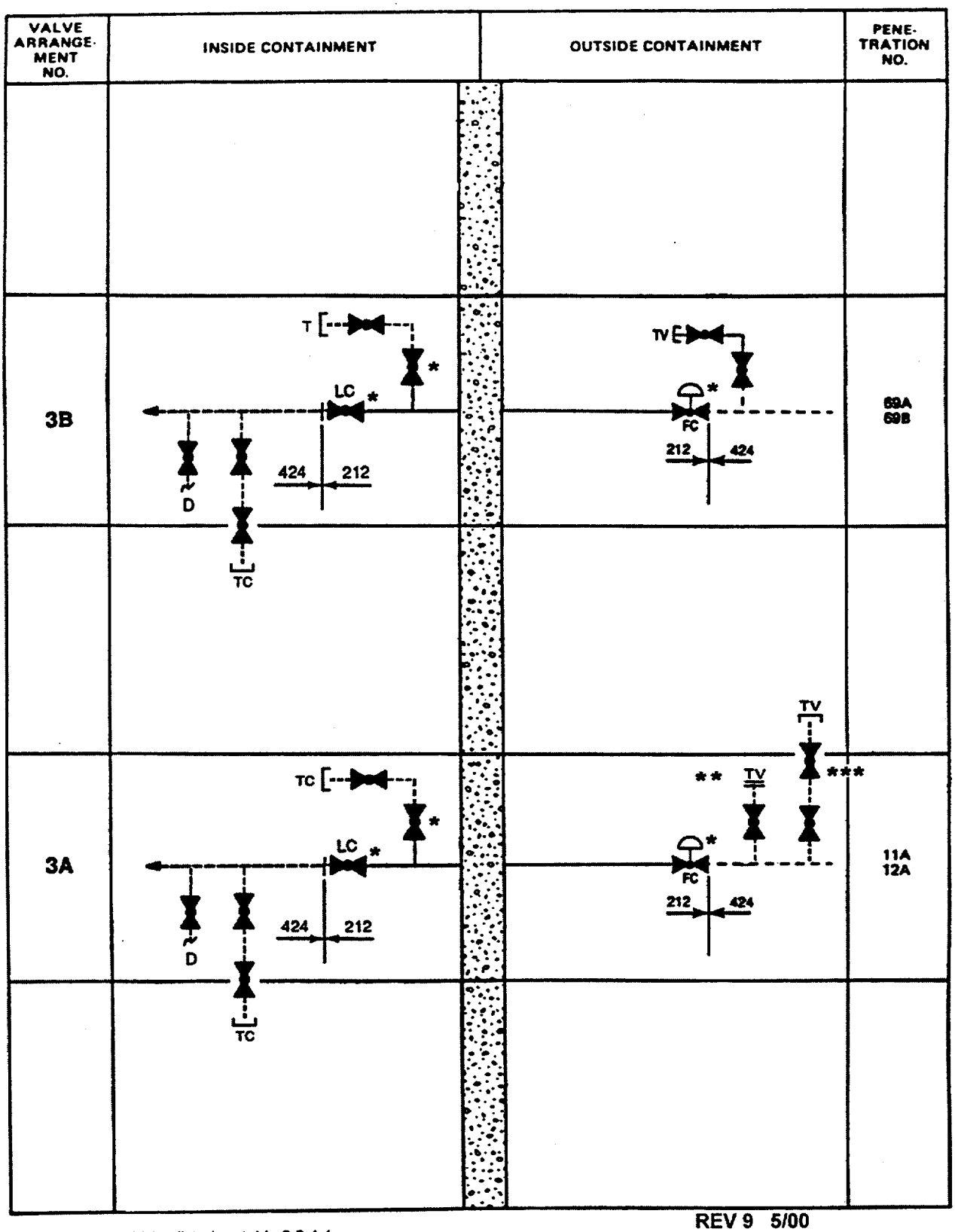

* Valve listed on table 6.2.4-1
** Applicable Unit 1 only
*** Applicable Unit 2 only

REV 9 5/00
REV 6 4/97
REV 5 9/95
REV 4 4/94

VOGTLE
ELECTRIC GENERATING PLANT
UNIT 1 AND UNIT 2

VALVE ARRANGEMENT

FIGURE 6.2.4-1 (SHEET 2 OF 13)

VALVE ARRANGEMENT NO.	INSIDE CONTAINMENT	OUTSIDE CONTAINMENT	PENETRATION NO.
6	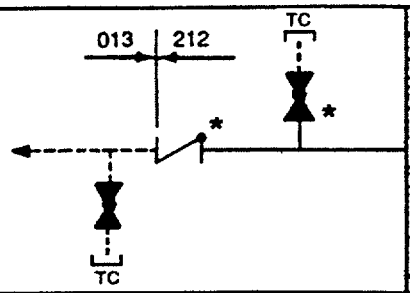	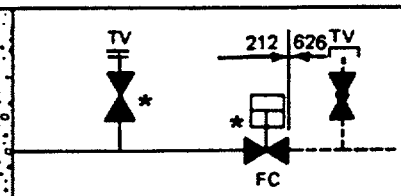	80
7	VALVES FOR 67A AND 67B ARE NORMALLY CLOSED 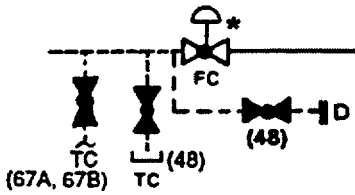	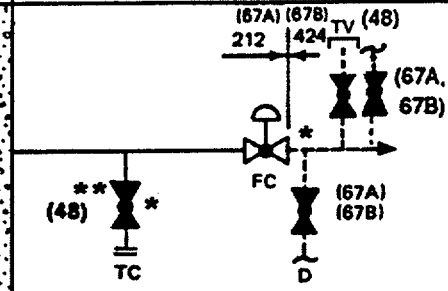	48 67A 67B
8	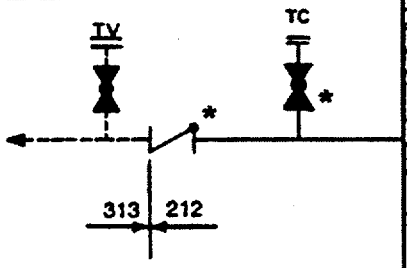	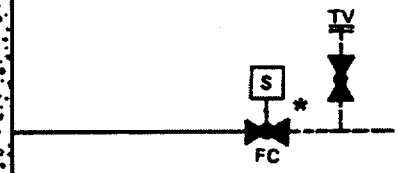	70B 71B
9	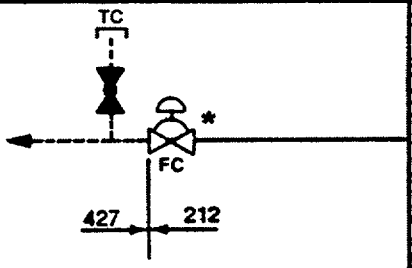	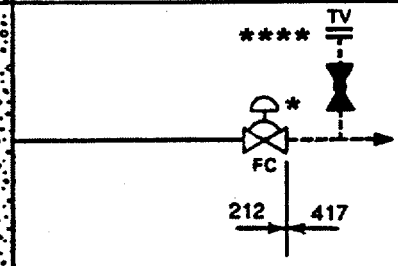	79
10	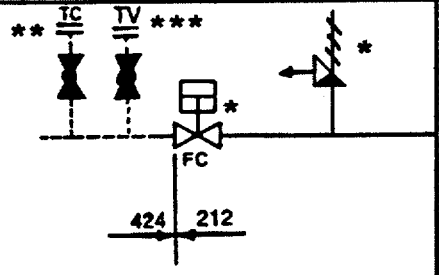	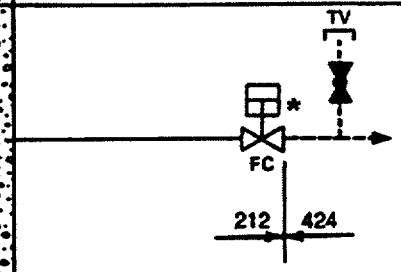	78

* Valve listed on table 6.2.4-1
** Applicable to Unit 1 only
*** Applicable to Unit 2 only
**** Blind flange applies to Unit 2 only

REV 9 5/00
REV 8 10/98
REV 6 4/97
REV 4 4/94
REV 2 3/92
REV 1 3/91

VOGTLE
ELECTRIC GENERATING PLANT
UNIT 1 AND UNIT 2

VALVE ARRANGEMENT

FIGURE 6.2.4-1 (SHEET 3 OF 13)

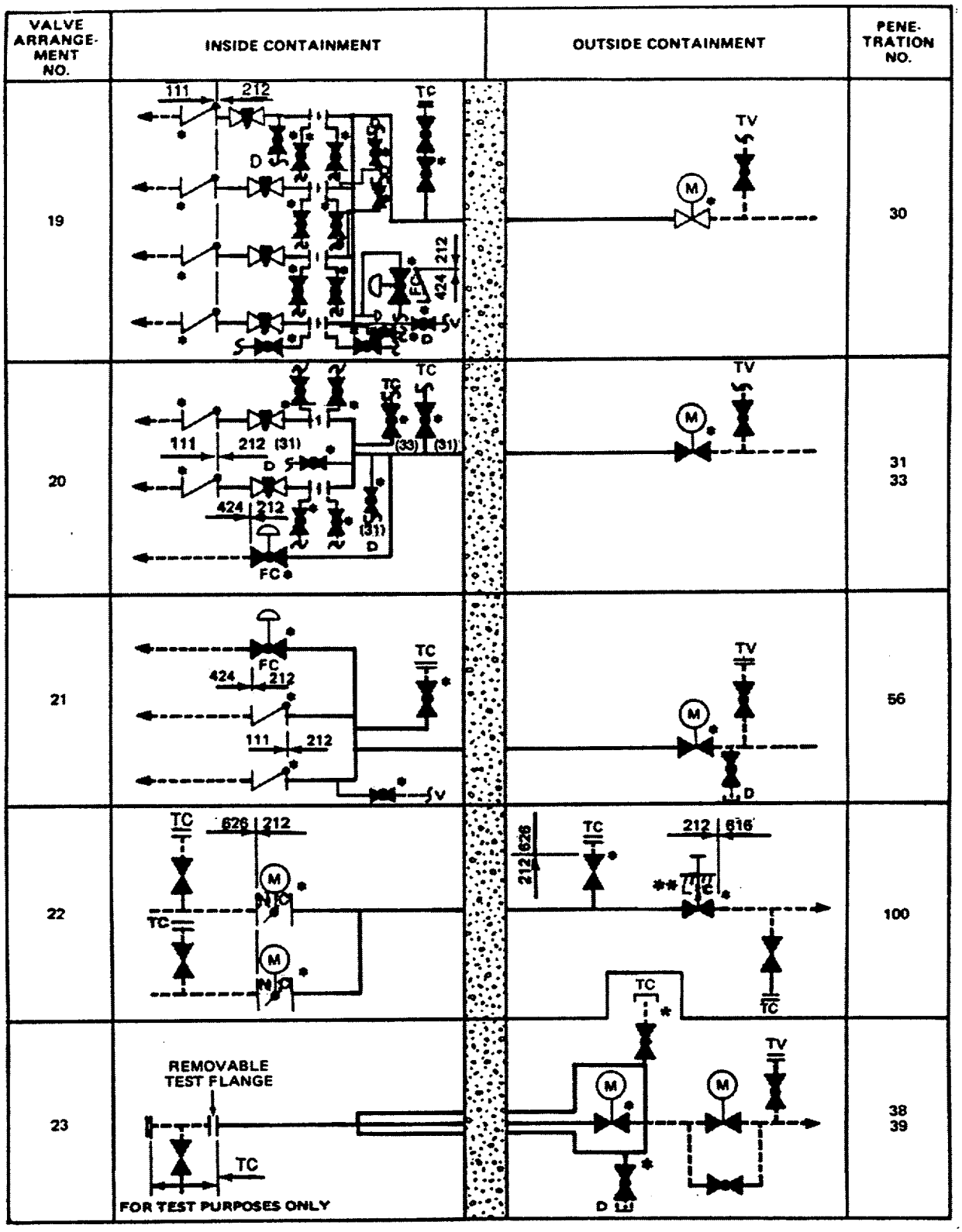

* Valve listed on table 6.2.4-1

** Valve stem extension applies to Unit 1 only

REV 9 5/00
REV 6 4/97
REV 4 3/94

VOGTLE
ELECTRIC GENERATING PLANT
UNIT 1 AND UNIT 2

VALVE ARRANGEMENT

FIGURE 6.2.4-1 (SHEET 6 OF 13)

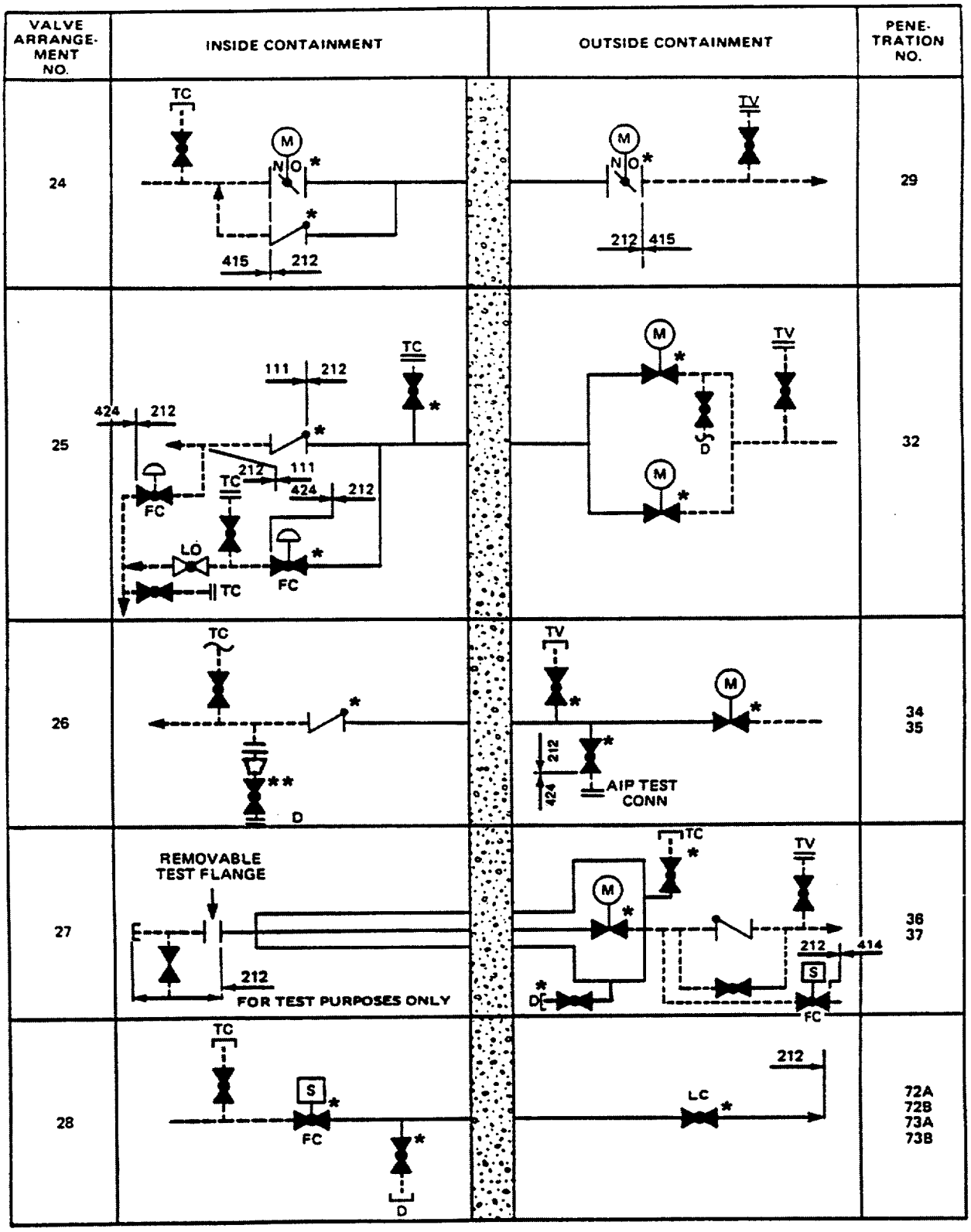

* Valve listed on table 6.2.4-1

** Valve used for penetration 34 only, blind flange only for penetration 35.

REV 9 5/00
REV 5 9/95
REV 4 4/94
REV 3 12/92

VOGTLE ELECTRIC GENERATING PLANT UNIT 1 AND UNIT 2	VALVE ARRANGEMENT FIGURE 6.2.4-1 (SHEET 7 OF 13)

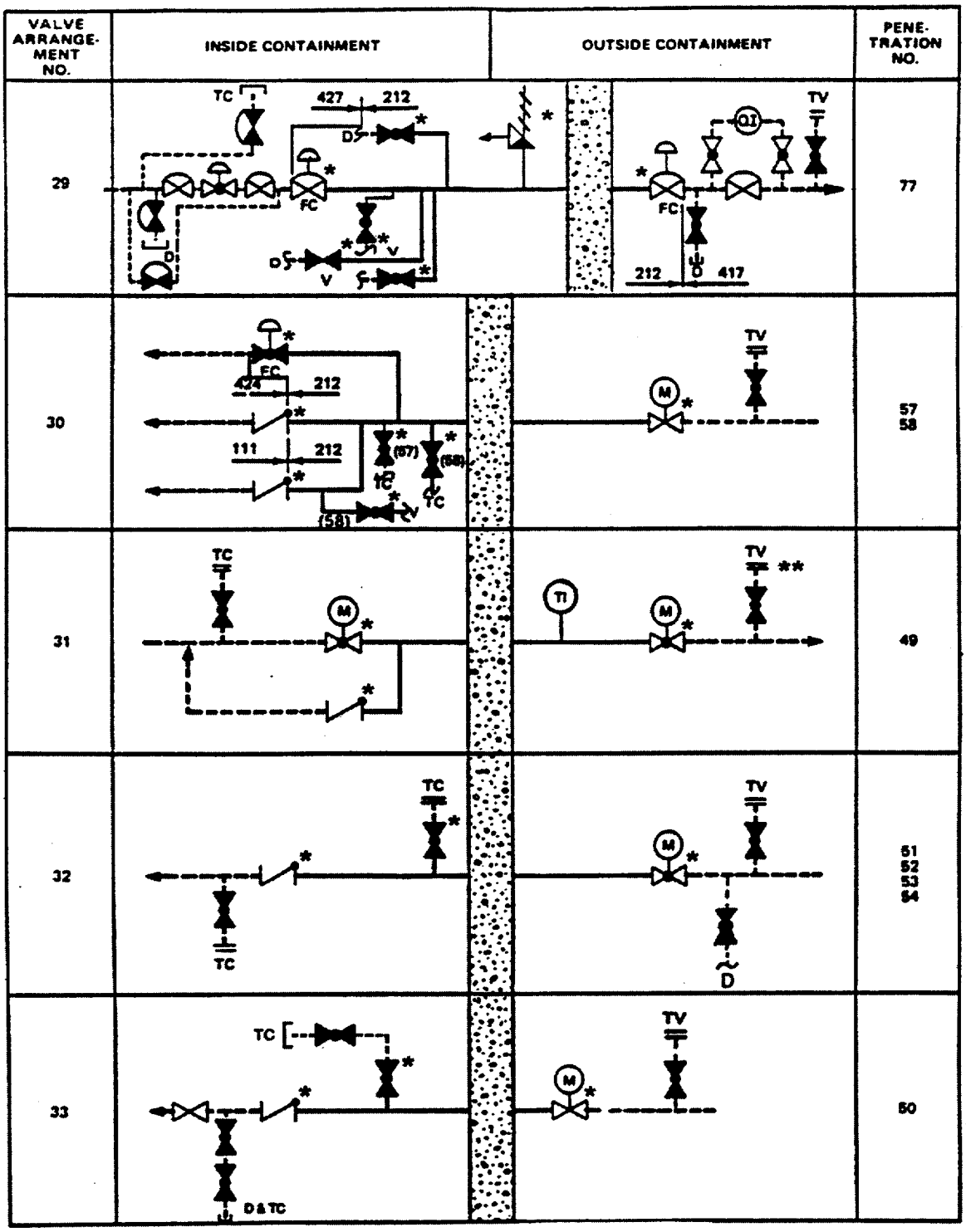

* Valve listed on table 6.2.4-1

** Blind flange applies to Unit 2 only

REV 9 5/00
REV 8 10/98
REV 6 4/97
REV 5 9/95
REV 4 4/94
REV 3 12/92

VOGTLE
ELECTRIC GENERATING PLANT
UNIT 1 AND UNIT 2

VALVE ARRANGEMENT

FIGURE 6.2.4-1 (SHEET 8 OF 13)

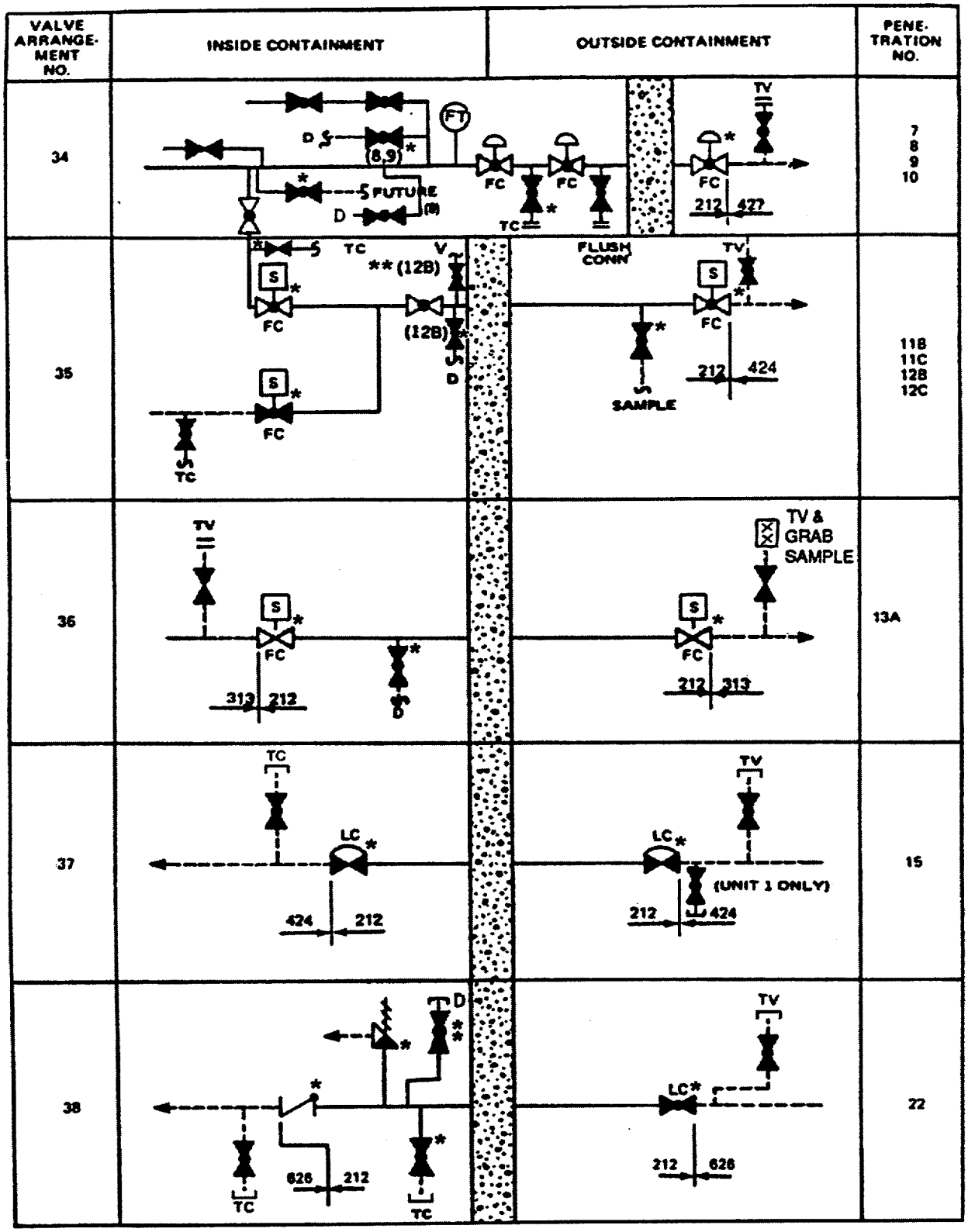

* Valve listed on table 6.2.4-1

** Applicable to Unit 1 only

REV 9 5/00
REV 6 4/97
REV 4 4/94

VOGTLE ELECTRIC GENERATING PLANT UNIT 1 AND UNIT 2	VALVE ARRANGEMENT
	FIGURE 6.2.4-1 (SHEET 9 OF 13)

VALVE ARRANGEMENT NO.	INSIDE CONTAINMENT	OUTSIDE CONTAINMENT	PENETRATION NO.
39	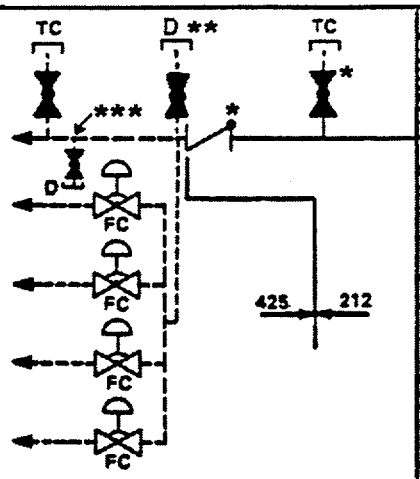	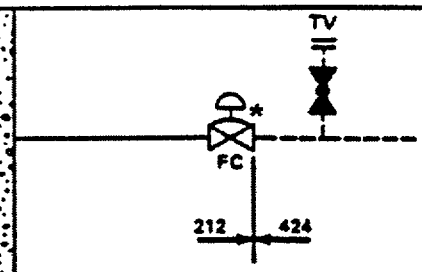	63
40	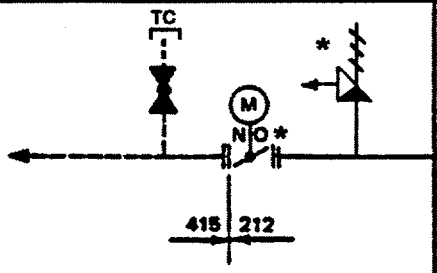	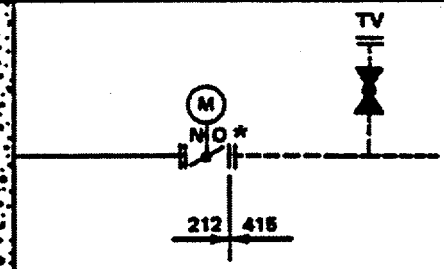	28
41	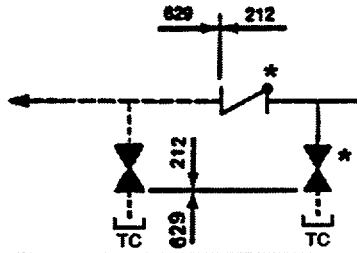	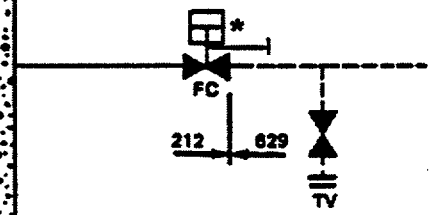	40
42	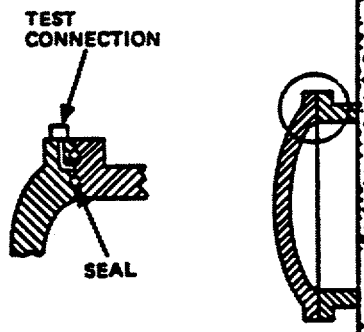		

* Valve listed on table 6.2.4-1
** Applicable to Unit 1 only
*** Applicable to Unit 2 only

REV 8 10/98
REV 6 4/97
REV 4 4/94
REV 9 5/00 REV 3 12/92

VOGTLE
ELECTRIC GENERATING PLANT
UNIT 1 AND UNIT 2

VALVE ARRANGEMENT

FIGURE 6.2.4-1 (SHEET 10 OF 13)

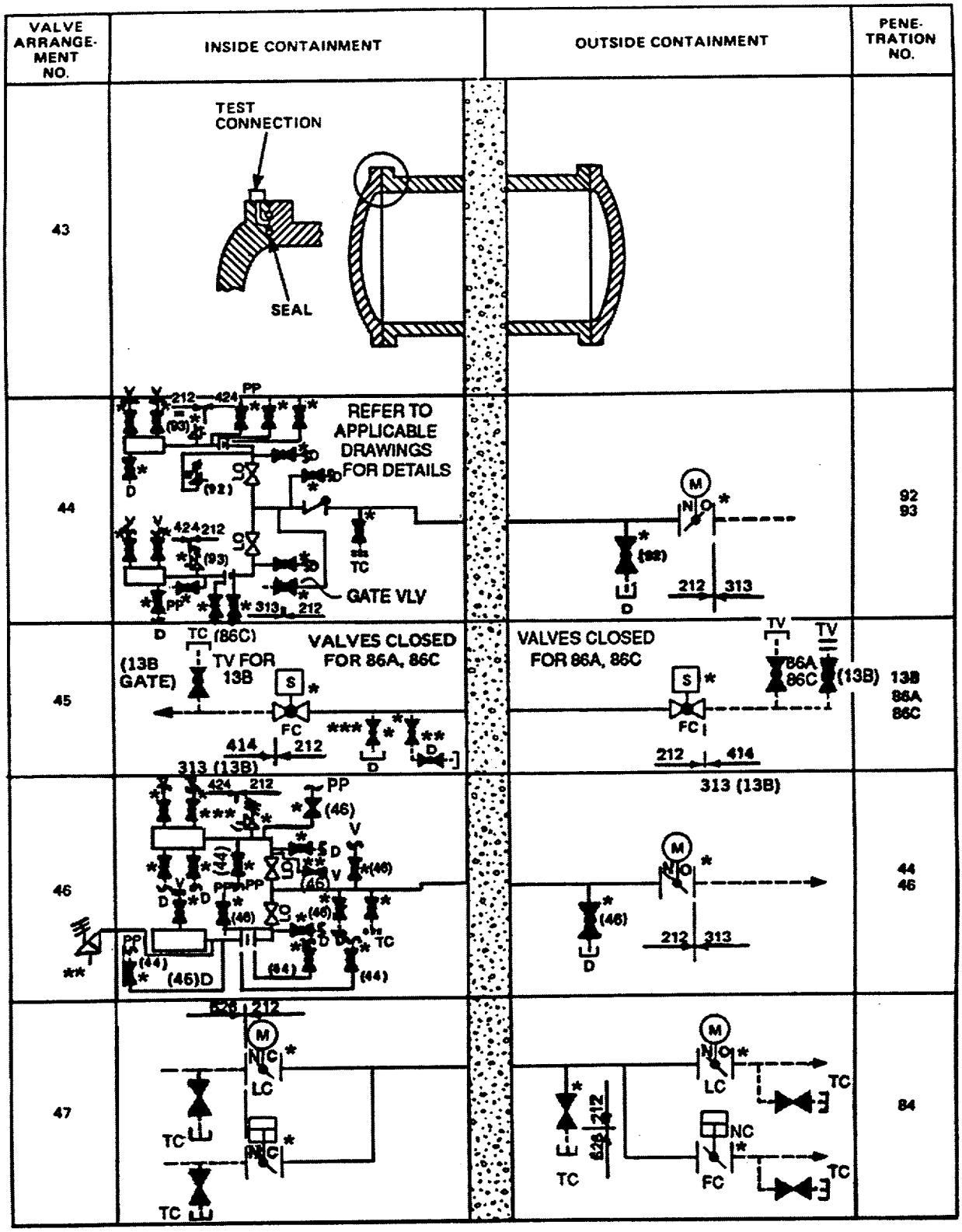

* Valve listed on table 6.2.4-1
** Applicable to Unit 1 only
*** Applicable to Unit 2 only

REV 9 5/00
REV 6 4/97
REV 4 4/94

VOGTLE ELECTRIC GENERATING PLANT UNIT 1 AND UNIT 2	VALVE ARRANGEMENT FIGURE 6.2.4-1 (SHEET 11 OF 13)

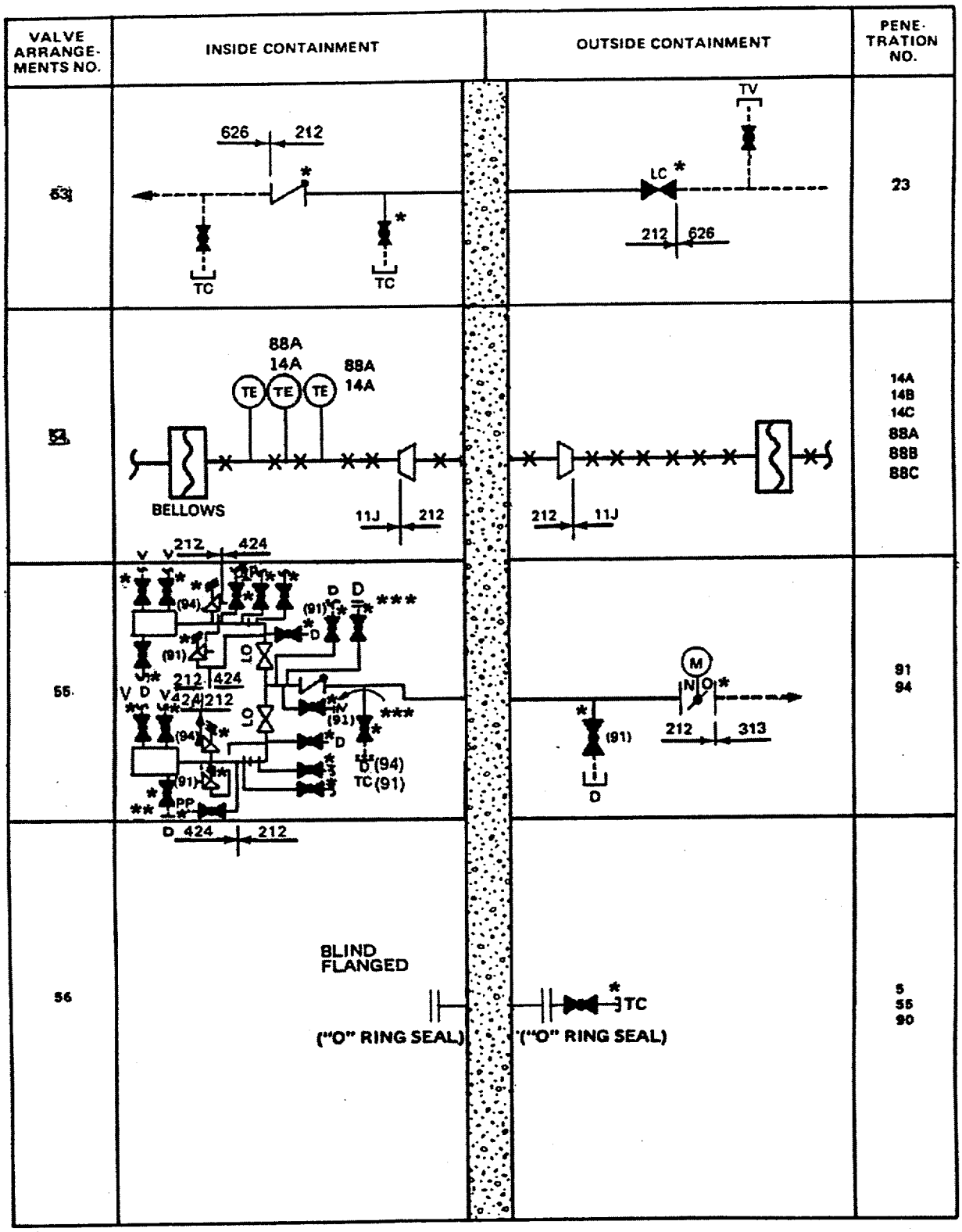

* Valve listed on table 6.2.4-1

** Applicable to Unit 1 only

*** Applicable to Unit 2 only

REV 9 5/00
REV 6 4/97
REV 4 4/94
REV 1 3/91

VOGTLE ELECTRIC GENERATING PLANT UNIT 1 AND UNIT 2	VALVE ARRANGEMENT FIGURE 6.2.4-1 (SHEET 13 OF 13)

- A 4-in. charcoal adsorber.
- A HEPA afterfilter.

The hydrogen purge exhaust filter unit is located in the equipment building, and the hydrogen purge intake point is located in the containment dome. The ductwork is fastened to the inside of the containment and routed through a containment penetration. The flowrate through the filter unit is 500 ft^3/min.

The system is actuated manually. The operator unlocks and opens the manual isolation valve located outside the containment. From the control room, the operator opens the remote-manual isolation valves located inside the containment. The outward purge flow is due to the pressure differential existing between the containment atmosphere and the environment. Periodically, the operator will dilute the containment atmosphere by charging air into the containment via the instrument and service air system.

6.2.5.2.3 Post-LOCA Cavity Purge System

The post-LOCA cavity purge system is designed to prevent hydrogen pocketing in the reactor cavity following a LOCA by supplying air to the reactor cavity for dilution of the hydrogen released in the cavity area. The system fans take a suction on the atmosphere within the generator compartments and discharge the air into the cavity above (el 193 ft 2 in.) and below (169 ft 9 in.) the reactor vessel nozzles. The air flows out of the cavity along the reactor vessel nozzles or through the ventilation openings surrounding the seal ring.

The system consists of two 100-percent-capacity fans. Each fan is powered from an independent Class 1E power supply. The fans automatically start on a safety injection signal. There is an independent discharge pipe which routes the dilution air from the fans to the cavity. A failure modes and effects analysis is provided in table 6.2.5-2. Distribution of the air in the cavity area is accomplished via common discharge headers. All portions of the system are designed to Seismic Category 1 requirements.

Design data for principal components is provided in table 6.2.5-4. The system is schematically shown in drawing 1X4DB214-2.

6.2.5.2.4 Containment Hydrogen Monitoring System

Each redundant hydrogen monitoring train in the hydrogen monitoring system consists of a hydrogen analyzer and two associated sample lines with solenoid-operated isolation valves inside and outside the containment. These sampling lines are designed to be free of water traps (runs where liquid could accumulate) and are equipped with sufficient heat tracing to prevent condensation from the sample being supplied to the analyzers.

After the sample has been analyzed, it is returned to the containment. The analyzers are located in accessible areas outside the containment. The hydrogen monitoring subsystem piping is in accordance with the criteria of Regulatory Guide 1.26, Quality Group B. Solenoid-operated isolation valves are arranged to obtain samples from two locations within the containment for each train. The operator may select either of these sampling points from the main control room.

The operation of the hydrogen gas analyzer is based on the measurement of thermal conductivity of the gaseous containment atmosphere sample. The thermal conductivity of the gas mixture changes in proportion to the changes in the concentration of the individual gas constituents of the mixture. The thermal conductivity of hydrogen is far greater (approximately seven times the thermal conductivity of air) than any other gases or vapors expected to be present. This operation of the hydrogen monitoring system is not limited due to radiation, moisture, or temperature expected at the equipment location. The monitors are designed to function under design pressure conditions of -2 to 60 psig.

The containment hydrogen monitors are aligned for operation within 60 minutes after initiating safety injection following a LOCA. Accurate indication of hydrogen concentration is available within 30 min of initiating flow through the monitors. This is accomplished by operating the monitors in standby during normal plant operation. Therefore, indication of containment hydrogen concentration is available to the operators within 90 minutes of initiating safety injection following a LOCA.

The range of the monitors is 0 to 10 volume percent with an accuracy of ±5.0 percent of scale.

The output signal of the hydrogen monitors is indicated and alarmed locally as well as indicated, recorded, and alarmed in the control room. In addition to the high hydrogen alarm, a common malfunction alarm is located in the control room to indicate loss of power, low gas pressure, low analyzer chamber temperature, analyzer cell failure, or high hydrogen concentration.

Design data for principal system components are presented in table 6.2.5-5. The system is schematically shown in drawings 1X4DB213-1 and 1X4DB213-2.

The hydrogen monitoring system meets the requirements of TMI Action Plan Task II.F.1 with the clarification that accurate indication of containment hydrogen concentration is available to the operators within 90 minutes of initiating safety injection following a LOCA.

6.2.5.2.5 Containment Hydrogen Mixing

Hydrogen mixing is facilitated by the containment fan coolers, which take suction from above the operating deck and discharge to the lower levels of the containment. Functional descriptions of the containment coolers are provided in subsections 6.2.2 and 9.4.6. A flow diagram for the containment coolers is provided in drawings 1X4DB251-1, 1X4DB252, and 1X4DB253-1.

In addition, the post-LOCA cavity purge system described in paragraph 6.2.5.2.3 is available for hydrogen mixing.

6.2.5.3 Design Evaluation

6.2.5.3.1 Hydrogen Production and Accumulation

6.2.5.3.1.1 Zirconium-Water Reaction. A major source of hydrogen immediately following a LOCA is caused by the reaction of the Zircaloy fuel cladding with water. The extent of the zirconium-water reaction depends upon the effectiveness of the emergency core cooling systems (ECCS). An evaluation of the VEGP ECCS shows the zirconium-water reaction to be less than 0.3 percent.

Zirconium reacts with steam according to the following equation:

$$Zr + 2\ H_2O \rightarrow Zr\ O_2 = 2\ H_2 + \text{Heat}$$

The hydrogen produced is calculated as follows:

$$\frac{2 \text{ lb-mole } H_2/\text{lb-mole Zr}}{91.22 \text{ lb Zr/lb-mole Zr}} = \frac{0.022 \text{ lb-mole } H_2}{\text{lb Zr}}$$

The NRC model suggested in Regulatory Guide 1.7 and Standard Review Plan 6.2.5 conservatively assumes a 1.5-percent zirc-water reaction (five times the maximum amount calculated

in the ECCS evaluations).[1] There are approximately 45,914 lb of zirconium metal in the reactor core. The hydrogen produced by the reaction of 689 lb of zirconium is 15.15 lb-moles. This hydrogen is assumed to be immediately released to the containment atmosphere.

6.2.5.3.1.2 Radiolysis Core and Sump Solutions. Water radiolysis is a complex process involving reactions of numerous intermediates. However, the overall radiolytic process may be described by the equation:

$$H_2O \leftrightarrow H_2 + \frac{1}{2} O_2$$

An extensive program was conducted by Westinghouse to investigate the radiolytic decomposition of the core cooling solution following the DBA. During the investigation it became apparent that post-accident conditions in the containment create two distinct radiolytic environments. One environment exists inside the reactor vessel, where radiolysis can occur when energy emitted by decaying fission products in the fuel is absorbed by the solution pumped through the reactor to cool the core. The other environment exists outside the reactor vessel, in the containment sump solution, where radiolysis can also occur when decay energy emitted by dissolved fission products is absorbed by the sump solution. The two basic differences between the core environment and the sump environment that affect the rate of hydrogen production are the rate of energy absorption and the type of flow regime. The results of these investigations are discussed in reference 1.

The rate of hydrogen production by radiolysis depends upon the rate of energy absorption by the solution. A detailed analysis of energy deposition in the reactor core where decaying fission products are retained in the fuel shows that beta radiation (which represents roughly 50 percent of the total decay energy) is emitted at an energy level too low to permit its penetration of the fuel and cladding. As a result, roughly 50 percent of the total decay energy emitted by fission products in the fuel is absorbed by the fuel and cladding and therefore does not contribute significantly to the rate of energy absorption by the water. Furthermore, approximately 7 percent of the gamma energy is absorbed by the core solution; the rest is absorbed by the fuel, cladding, or other core components.

In the containment sump, where fission products are assumed to be dissolved in the sump solution, energy is emitted directly to the solution. Since the depth of the sump is relatively large compared to the penetrating capability of even gamma energy,

effectively 100 percent of the decay energy of the fission products dissolved in solution is absorbed by the solution. The other significant difference between the core and sump environment is the type of flow regime to which the products of radiolysis are exposed.

Radiolytic decomposition of water is a reversible reaction. In the core, where the products of radiolysis are continuously flushed away by the circulation of cooling solutions, there is little chance for hydrogen and oxygen to accumulate. Consequently, recombination of hydrogen and oxygen is assumed not to occur because significant quantities of the two reactants are not available. The sump, however, is a relatively deep and static environment, where the products of radiolysis are removed by molecular diffusion. Experimental tests simulating sump conditions demonstrate that there is significant reverse reaction in the sump. Hence, there is an apparent reduction in the quantity of hydrogen produced per unit energy absorbed.

The results of Westinghouse and Oak Ridge National Laboratory studies indicate maximum hydrogen yields of 0.44 molecules per 100 eV for core radiolysis and 0.3 molecules per 100 eV for sump radiolysis. The results of these studies are published in references 2, 3, and 4. This analysis, based on the conservative recommendations of Regulatory Guide 1.7 and Standard Review Plan 6.2.5, assumes a hydrogen yield of 0.5 molecules per 100 eV of energy absorbed for both core and sump radiolysis.

The rate of hydrogen gas production from radiolysis has been evaluated using the methodology presented in Appendix A to Standard Review Plan 6.2.5, and the calculational assumptions detailed in Regulatory Guide 1.7. Table 6.2.5-6 provides a summary of the assumptions made in the analysis.

6.2.5.3.1.3 Corrosion of Metals and Paints in Containment. Following a LOCA, hydrogen may be produced inside the containment by corrosion of aluminum and zinc.

Extensive corrosion testing has been conducted to determine the behavior and compatibility of various materials with alkaline borate solution.[7][8][9] Metals tested included Zircaloy, Inconel, aluminum alloys, cupronickel alloys, carbon steel, galvanized carbon steel, and copper. The tests showed that only aluminum and zinc will corrode at a rate that will significantly add to the hydrogen accumulation in the containment atmosphere.

Aluminum is found in the containment as aluminum metal components. Zinc will be in the form of either galvanized steel, zinc metal, or zinc-based paint.

Aluminum corrosion may be described by the overall reaction:

$$2\ Al + 3\ H_2O \rightarrow Al_2O_3 + 3\ H_2$$

Three moles of hydrogen gas are produced for every two moles of aluminum that is oxidized. Approximately 0.0556 lb-moles of hydrogen gas are produced for each pound of aluminum corroded.

The corrosion of zinc may be described by the overall reaction:

$$Zn + H_2O \rightarrow Zn(OH)_2 + H_2$$

One mole of hydrogen gas is produced for each mole of zinc that is oxidized. Approximately 0.0153 lb-moles of hydrogen gas are produced for each pound of zinc corroded.

The time-temperature cycle (table 6.2.5-9) considered in the calculation of aluminum and zinc corrosion is a representation of the postulated post-accident containment temperature transient. The corrosion rates at the various temperatures are shown in table 6.2.5-10. With these corrosion rates and the baseline aluminum and zinc inventory given in table 6.2.5-6, the contribution of aluminum and zinc corrosion to the hydrogen accumulation in the containment following the DBA was calculated. No credit was taken for the protective shielding effects of insulation or enclosures; i.e., complete and continuous immersion in spray was assumed.

Calculations based on Regulatory Guide 1.7 are performed by increasing the aluminum corrosion rate during the final interval of the post-accident containment temperature transient (table 6.2.5-9) to 200 mils/year. The aluminum and zinc corrosion rates earlier in the accident sequence are shown in table 6.2.5-10.

In order to determine an allowable margin of increase for the zinc and aluminum inventories, the hydrogen accumulation in the containment following a LOCA was calculated for different cases of varying zinc and aluminum inventories. Three cases were evaluated. They included the case where no recombiners were in operation, the case where one recombiner is in operation starting at day 2, and the case where one recombiner is in operation at 3.5 v/o of hydrogen. Based on the zinc and aluminum inventories provided by table 6.2.5-6, it was determined that the bounding case is 3 times the baseline zinc inventory or 3 times the baseline aluminum inventory or any combination thereof which satisfies the following equation:

$$\frac{N_{al}}{O_{al}} + \frac{N_{zn} + (N_{zbp} - O_{zbp})}{O_{zn}} \leq 4.0$$

movement could result in degraded ECCS performance. Power lockout is accomplished by providing a control power isolation switch for each of these valves on the main control board. Further details on power lockout are provided in paragraph 8.3.1.1.11. Table 6.3.2-3 provides a listing of the motor-operated isolation valves in the ECCS, showing interlocks, automatic features, and position indication.

Periodic visual inspection and operability testing of the motor-operated valves in the ECCS ensure that there is no potential for impairment of valve operability due to boric acid crystallization which could result from valve stem leakage.

In addition, the location of all motor-operated valves within the containment has been examined to identify any motor operators which may be submerged following a postulated LOCA. Based on a maximum post-LOCA flood level of el 181 ft 4 in., the only potentially submerged valves are the accumulator discharge valves, HV-8808 A, B, C, and D. These valves are positioned prior to startup and then have power removed from the motor operator. These valves are not required to change position after a LOCA. Therefore, the flooding of these motor operators and any resultant postulated failure does not present any problems for either the short or long-term ECCS operations, containment isolation, or any other safety-related function.

6.3.2.2.17 Manual Valves

The 24-in. manually operated gate valve on the suction line from the RWST is the only manual valve which, if mispositioned, could totally interrupt ECCS flow. For this reason and in accordance with Regulatory Guide 1.47, the valve is locked open, administratively controlled, and provided with redundant system level input to the bypassed/inoperable status panel in the control room.

Manual valves are generally used as maintenance isolation valves or throttling valves. When used for these functions they are under administrative control, which requires them to be locked in the correct position. Manual valves used as maintenance isolation valves occur on the SI and RHR pump discharges. They are located so that no single valve can isolate both trains of ECCS equipment. Manual valves are also used as throttling valves in the injection branch paths of the high-head ECCS pumps.

To preclude the possibility of ECCS degradation due to valve mispositioning, branch line connections such as vent and drain lines, test connections, pressure points, flow element test points, flush connections, local sample points, and bypass lines are provided with double isolation or sealed barriers. The isolation is provided by one of the following methods: two valves in a series; a single valve with a screwed cap or blind flange; a single locked closed valve; or a blind flange. These valves are under administrative control.

6.3.2.2.18 Accumulator Motor-Operated Valve Control

As part of the plant shutdown procedures, the operator is required to close these valves. This prevents a loss of accumulator water inventory to the RCS and is done after the RCS has been depressurized below 1000 psig. The redundant pressure and level alarms on each accumulator function to alert the operator to close these valves, if any are inadvertently left open. Power is locked out after the valves are closed.

During plant startup, Technical Specifications require these valves be open with power removed in mode 3 when the RCS pressure exceeds 1000 psig. Monitor lights in conjunction with an audible alarm alert the operator should any of these valves be left inadvertently closed. The audible alarm is enabled once the RCS pressure increases beyond the SI unblock setpoint. Power is locked out after these valves are opened.

The accumulator isolation valves are not required to move for the accumulators to perform their safety function during power operation or in a post-accident situation. For a discussion of limiting conditions for operation and surveillance requirements of these valves, refer to the Technical Specifications.

The accumulator isolation valves receive an SI signal to ensure that they are open in the event of an accident occurring during inservice inspection testing.

For further discussion of the instrumentation associated with these valves, refer to subsections 6.3.5, 7.3.1, and 7.6.4.

6.3.2.3 Applicable Codes and Standards

Applicable codes and standards for the ECCS are discussed in section 3.2.

5. Provisions are also made in the design to detect leakage from components outside the containment, collect this leakage, and provide for maintenance of the affected equipment.

For the long-term emergency core cooling function, adequate core cooling capacity exists with one flowpath removed from service.

B. Subsequent Leakage from Components in Safeguards Systems

With respect to piping and mechanical equipment outside the containment, considering the provisions for visual inspection and leak detection, leaks can be detected before they propagate to major proportions. A review of the equipment in the system indicates that the largest sudden leak potential would be the sudden failure of a pump shaft seal. Evaluation of the leakrate assuming only the presence of a seal retention ring around the pump shaft showed flows less than 50 gal/min would result. Piping leaks, valve packing leaks, or flange gasket leaks have been of a nature to build up slowly with time and are considered less severe than the pump seal failure.

Larger leaks in the ECCS are prevented by the following:

1. The piping is classified in accordance with American National Standards Institute (ANSI) Safety Class 2 and receives the American Society of Mechanical Engineers (ASME) Class 2 quality assurance program associated with this safety class.

2. The piping, equipment, and supports are designed to ANSI Safety Class 2, Seismic Category 1 requirements, permitting no loss of function for the safe shutdown earthquake.

3. The system piping is located within a controlled area on the plant site.

4. The piping system receives periodic pressure tests and is accessible for periodic visual inspection.

5. The piping is austenitic stainless steel which, due to its ductility, can withstand severe distortion without failure.

The design of the auxiliary building and related equipment is based upon handling of leaks up to a maximum of 50 gal/min. Subsection 9.3.3 describes the design features provided to detect and isolate such leaks in the ECCS flowpath within 30 min.

6.3.2.5.3 Lag Times

Lag times for initiation and operation of the ECCS are limited by pump startup time and consequential loading sequence of these motors onto the safeguard buses. Most valves are normally in the position conducive to safety; therefore, valve operation time is not considered for these valves. If there is no loss of offsite power, all pump motors and valve motors are loaded immediately onto the safeguards buses according to the sequencer. The charging pumps and all valves are applied to the buses in 0.5 s, the SI pumps in 5.5 s, and the RHR pumps in 10.5 s. Safeguards pumps are capable of obtaining operating speed and rated flow within 4 s of receipt of the start signal. In the case of loss of offsite power, the diesel generator is designed for a 9.5-s delay to start and to obtain operating speed and voltage prior to the safeguards pumps and valves being sequenced onto the safeguards buses, which is less than the time assumed in the accident analysis. These lag times refer to the time after initiation of the SI signal.

6.3.2.5.4 Potential Boron Precipitation

Boron precipitation in the reactor vessel can be prevented by a backflush of ECCS water through the core to terminate boiloff and the resulting increase in boron concentration of the water remaining in the reactor vessel. This is accomplished by the switchover from cold leg to hot leg recirculation at about 7.5 h following an accident. In addition to preventing boron precipitation by backflushing the core, hot leg recirculation provides subcooled water to terminate boiloff.

Three flowpaths, each with sufficient capacity to prevent precipitation, are available for hot leg recirculation of containment emergency sump water. Each SI pump can discharge to two hot legs with suction taken from the RHR pump discharge, either directly or indirectly via the charging pump cross connect. Each SI pump flow path provides an independent train of hot leg recirculation flow. In addition, the RHR pump of each train can also be aligned to deliver flow directly to two hot legs via a common hot leg recirculation header, through train B valve HV-8840 to provide the third flow path. Normal operator response is to align both RHR pumps to the hot legs through HV-8840 and both SI pumps to the hot legs. Sufficient flow to prevent precipitation only requires one SI pump aligned to the hot legs.

Loss of one pump or one flowpath or one complete train (including train B) will not prevent hot leg recirculation since redundant methods are available for use.

6.3.2.5.5 Safety Grade Cold Shutdown Function

During a safety-grade cold shutdown, the ECCS is relied upon to provide one of the two redundant flowpaths for boration and makeup. The BIT high-head injection header (Unit 1) and the CVCS charging pump high head cold leg injection header (Unit 2) provide this function. The redundant flowpath is the normal charging header, which is part of the chemical and volume control system (CVCS). Two independent subsystems, each consisting of a charging pump and the associated valves and piping, are provided and are powered by redundant emergency buses in a manner that ensures that at least one subsystem is always operable. A solenoid valve provided in each subsystem and located in the CVCS ensures that the remote throttling capability necessary for RCS inventory control and shutdown is available. Provisions are also included in the ECCS design to ensure that the accumulators can be either isolated or vented so that RCS depressurization can be accomplished. Details of the cold shutdown design are discussed in subsection 5.4.7. A failure mode and effects analysis for safety-grade cold shutdown operations is provided in table 6.3.2-9.

6.3.2.6 Protection Provisions

The provisions taken to protect the system from damage that might result from dynamic effects are discussed in section 3.6. The provisions taken to protect the system from missiles are discussed in section 3.5. The provisions to protect the system from seismic damage are discussed in sections 3.7.N, 3.9.N, and 3.10.N. Thermal stresses on the RCS are discussed in section 5.2.

6.3.2.7 Provisions for Performance Testing

Test lines are provided for performance testing of the ECCS as well as individual components. These test lines and instrumentation are shown in drawings 1X4DB119, 2X4DB119, 1X4DB120 and 1X4DB121. All pumps have miniflow lines for use in testing operability. Additional information on testing can be found in paragraph 6.3.4.2.

6.3.2.8 Manual Actions

The ECCS is automatically actuated by those accidents identified

in subsection 6.3.1. Following actuation, the ECCS continues to operate in the injection mode until its operation is terminated by the operator or until its operation is switched to the recirculation mode. During the injection mode no manual actions are required for proper operation of the ECCS. For the loss-of-secondary-coolant accident and the tube rupture accident, the operator should stabilize plant conditions and terminate ECCS operation after satisfying the criteria for ECCS termination. For the LOCA, the operator may not be able to terminate ECCS operation and may have to initiate manual actions to align the ECCS for the recirculation mode. The following discussion addresses the limited manual actions that are required of the operator to realign the system for the cold leg recirculation mode of operation and, after approximately 7.5 h, for the hot leg recirculation mode of operation. These actions are delineated in table 6.3.2-7. Operator action (both short term and long term) required for the various modes of ECCS operation to mitigate the consequences of a LOCA or steam line break, as well as other accident conditions, is presented in the emergency operating procedures. These procedures discuss the alarms/indications available to the operator to lead him to take the appropriate actions.

The switchover from the injection mode to recirculation mode is initiated automatically and completed manually by operator action from the main control room. Protection logic is provided to automatically open the two containment emergency sump isolation valves when two out of four RWST level channels indicate a low-low level in conjunction with an SI signal. This automatic action aligns the two RHR pumps to take suction from the containment emergency sump. The RHR pumps continue to operate during this automatic switchover from the injection mode to the recirculation mode.

The two charging pumps and the two SI pumps continue to take suction from the RWST until manual operator action is taken to align these pumps in series with the RHR pumps.

The RWST level protection logic consists of four level channels with each level channel assigned to a separate process control protection set. Four RWST level transmitters provide level signals to corresponding normally deenergized level channel bistables. Each level channel bistable is energized on receipt of an RWST level signal less than the low-low level setpoint. A two-out-of-four coincident logic is utilized in both protection cabinets A and B to ensure a trip signal in the event that two of the four level channel bistables are energized. This trip signal, in conjunction with the SI signal, provides the actuation signal to automatically open the corresponding containment emergency sump isolation valves.

The RWST low-low level signal is also alarmed to inform the operator to initiate the manual action required to realign the RHR, charging, and SI pumps for the recirculation mode.

TABLE 6.3.2-1 (SHEET 1 OF 3)

EMERGENCY CORE COOLING SYSTEM
COMPONENT PARAMETERS

Accumulators

Number	4
Design pressure (psig)	700
Design temperature (°F)	300
Operating temperature (°F)	60-120
Normal operating pressure (psig)	650
Total volume (ft^3)	1350 each
Nominal water volume (ft^3)	900 each
Nominal volume N gas (ft^3)	400 each
Boron concentration, nominal (ppm)	1900-2600

Centrifugal charging pumps (See figure 6.3.2-3.)

Number	2
Design pressure (psig)	2800
Design temperature (°F)	300
Design flow (gal/min)	150
Design head (ft)	5800
Maximum flow (gal/min)	555
Design head at maximum flow (ft)	1400
Design head at shutoff (ft)	6200
Motor rating (hp)	600
Required NPSH at maximum flow (ft)	(See figure 6.3.2-3.)
Available NPSH at maximum flow (ft) from RWST	81
Discharge orifice (2FO-10122 & 2FO-10123)	(See drawing 2X6AH02-30000 for sizing)

SI pumps (See figure 6.3.2-4.)

Number	2
Design pressure (psig)	1750
Design temperature (°F)	300
Design flow (gal/min)	425
Design head (ft)	2680
Maximum flow (gal/min)	660
Design head at maximum flow (ft)	1660
Design head at shutoff (ft)	3545
Motor rating (hp)	450
Required NPSH at maximum flow (ft)	(See figure 6.3.2-3.)

TABLE 6.3.2-3 (SHEET 2 OF 3)

Location	Valve Identification	Interlocks	Automatic Features[a]	Position Indication[b]	Alarms
CVCS pump discharge	HV-8105, HV-8106, HV-8116	SI signal	Closes on SI signal. 10 s[f] for HV-8116 17 s[i] for HV-8105, HV-8106	MCB	None
BIT suction (Unit 1 only)	HV-8803 A,B	None	None[g]	None	None
BIT discharge (Unit 1) and CVCS charging pump high head cold leg	HV-8801 A,B	SI signal	Opens on SI signal. 10 s[f] for 1HV-8801A, B 17 s[i] for 2HV-8801A, B	MCB[b]	Yes-out of position
Charging pump/SI pump crossover crossover	HV-8807 A,B, HV-8924	None	None[c]	MCB	Yes-out of position
RHR to RCS cold legs	HV-8809 A,B	None	None	MCB	Yes-out of position
SI pump miniflow	HV-8813, HV-8814, HV-8920	Cannot be opened unless RHR discharge to SI and charging pumps closed.	None[c]	MCB	Yes-out of position
RHR cross-connect	HV-8716 A,B[h]	None	None[c]	MCB	Yes-out of position
SI pump cross-connect	HV-8821 A,B	None	None	MCB	Yes-out of position
Charging pump normal miniflow	HV-8110, HV-8111 A,B	SI signal	Closes on SI signal. 15 s	MCB	Yes-out of position
Charging pump suction	HV-8471 A,B	None	None	MCB	Yes-out of position
Charging pump discharge	HV-8485 A,B, HV-8438	None	None	MCB	Yes-out of position

REV 9 5/00
REV 8 10/98
REV 6 4/97
REV 5 9/95
REV 4 4/94

TABLE 6.3.2-3 (SHEET 3 OF 3)

Location	Valve Identification	Interlocks	Automatic Features[a]	Position Indication[b]	Alarms
Charging pump alternate miniflow	HV-8508 A,B	Cannot be opened by operator unless volume control tank discharge valves closed and RHR discharge to SI and charging pumps closed.	Enabled on SI signal and will open or close based on centrifugal charging pump discharge pressure.	MCB	Yes-incorrect mode
	HV-8509 A,B	Cannot be opened unless RHR discharge to SI and charging pumps closed.	None[c]	MCB	Yes-out of position
RHR pump miniflow	FV-610, 611	None	Open if pump discharge flow is less than 751 gpm at 350°F, 709 gpm at 100°F and close when the flow exceeds 1405 gpm at 350°F, 1326 gpm at 100°F (10 s).	MCB	None

a. Times are maximum motor-operated valve stroke times that are significant to safety analysis/evaluations. No time is indicated where stroke time was irrelevant to safety analyses/evaluations.
b. MCB - main control board.
c. Vogtle FSAR table 6.3.2-7 provides the switchover sequence from the post-accident cold leg injection mode to the cold leg recirculation mode of operation. The times provided in FSAR table 6.3.2-7, in conjunction with the RWST outflow, are used to verify that there is sufficient volume between the RWST Lo-Lo and empty alarms to complete the switchover sequence. Changes to valve stroke time should be evaluated for impact on available RWST volume.
d. Valve disk is provided with bonnet vent on containment side of disk.
e. Valves LCV-112D, E open automatically on an SI signal. Valves LCV-112B, C begin to close when LCV-112D, E reach full open. The safety analyses assume that the SI flow path is unavailable until both sets of valves reach their final positions.
f. The analysis assumes ECCS flow at 25 s. The operating time for the closure of the normal discharge valves and opening the injection valves should not be significantly different; therefore, the nominal value of 10 s was specified for these valves.
g. Valve is normally locked open, with power removed at component. Valve is operated manually for maintenance only.
h. Valve disk is provided with bonnet vent to RHR pump side.
i. The analysis assumes ECCS flow at 25 s. The limiting operation is the alignment of the charging pump suction to the RWST from the VCT. The normal discharge valves and the injection valves can have stroke times up to 25 s before affecting the time it takes to establish safety injection. These valves should have similar stroke times to reduced charging pump runout. Closure of the normal discharge valves is 17 s and the injection valves is 17 s, and the opening time of the injection valves is 17 s.

TABLE 6.3.2-7 (SHEET 4 OF 4)

Switchover from Cold Leg Recirculation to Hot Leg Recirculation

At approximately 7.5 h after the accident, hot leg recirculation shall be initiated. The manual operator switchover steps stated below are normally used to perform the switchover operation from the cold leg recirculation mode to the hot leg recirculation mode. Upon completion of the switchover steps, both RHR pumps are delivering from the containment emergency sumps directly to the RCS hot legs and are also delivering to the suction of the SI and charging pumps. Both SI pumps are delivering to the RCS hot legs and both charging pumps are delivering to the RCS cold legs. The CSS is not affected by the switchover to the hot leg recirculation procedure.

Switchover Steps

Step 1: Close the RHR pump discharge cold leg header isolation valves (HV-8809 A and B).

Step 2: Open the RHR pump discharge crossover isolation valves (HV-8716 A and B).

Step 3: Open the RHR pump discharge hot leg header isolation valve (HV-8840).

Step 4: Stop SI train A pump.

Step 5: Close the corresponding SI pump discharge crossover header isolation valve (HV-8821 A).

Step 6: Open the corresponding SI pump discharge hot leg header isolation valve (HV-8802 A).

Step 7: Restart SI train A pump.

Step 8: Stop SI train B pump.

Step 9: Close the corresponding SI pump discharge crossover isolation valve (HV-8821 B).

Step 10: Open the corresponding SI pump discharge hot leg header isolation valve (HV-8802 B).

Step 11: Restart SI train B pump.

Step 12: Close the SI pump discharge cold leg header isolation valve (HV-8835).

will not result in decreasing RCS pressure and ECCS actuation. The maximum break size for which the normal makeup system can maintain RCS pressure is obtained by comparing the calculated flow from the RCS through the postulated break against the charging system makeup flow capacity when aligned for maximum charging at normal RCS pressure. Makeup flow from two charging pumps is adequate to sustain pressurizer pressure at approximately 2210 psig for a break through a 0.375-in. diameter hole. This break results in a loss of approximately 17.5 lbm/s. For breaks less than a 0.375-in. diameter hole, the normal makeup system can maintain RCS pressure and permit the operator to execute an orderly shutdown.

For the purpose of evaluation, the spectrum of postulated piping breaks in the RCS is divided into major pipe breaks (large break) and minor pipe breaks (small breaks). The large break is defined as a rupture with a total cross-sectional area equal to or greater than 1 ft^2. The small break is defined as a rupture with a total cross-sectional area less than 1 ft^2 but larger than the maximum break size for which the normal makeup system can maintain RCS pressure as described above. Refer to subsection 15.6.5 for a detailed description of this accident, including acceptance criteria and analytical results.

For this accident, the ECCS is actuated upon receipt of an SI signal. Once actuated, the ECCS mitigates the spectrum of LOCA accidents, but its performance varies depending on the LOCA transient. The charging pumps function to immediately inject borated water from the refueling water storage tank. The SI pumps and RHR pumps function to start delivering borated water from the refueling water storage tank when the RCS depressurizes to approximately 1500 psia and 200 psia, respectively. The accumulators begin to inject when the RCS depressurizes to approximately 600 psia. During the LOCA transient, flow to the RCS is dependent on the RCS pressure transient. The ECCS water injected into the RCS provides for heat transfer from the core, prevents excessive core clad temperatures, and eventually accomplishes core reflood (large break) or core recovery (small break). The LOCA analyses do not take credit for the boron content of the injected water.

Following completion of core reflood (large break) or core recovery (small break), the ECCS continues to supply water to the RCS for long-term cooling. After

the water level in the refueling water storage tank reaches the low-low level setpoint, switchover to cold leg recirculation is initiated automatically and completed by manual operator action as discussed in paragraph 6.3.2.8. This permits continued cooling of the core by recirculation of the spilled water in the containment emergency sumps. At approximately 7.5 h after initiation of the LOCA, the ECCS is manually realigned in the hot leg recirculation mode to control boric acid concentration in the reactor vessel.

Figure 6.3.2-1 provides process flow diagrams which illustrate ECCS performance for the various modes of system operation.

6.3.3.4 Use of Dual Function Components

The ECCS contains components which have no other operating function and components which are shared with other systems. Components in each category are as follows:

A. Components of the ECCS which perform no other function are:

1. One accumulator for each loop which discharges borated water into its respective cold leg of the reactor coolant loop piping.

2. Two SI pumps, which supply borated water for core cooling to the RCS.

3. Deleted.

4. One BIT (Unit 1 only).

5. Deleted.

6. Associated piping, valves, and instrumentation.

B. Components which also have a normal operating function are as follows:

1. Two RHR pumps and two residual heat exchangers which are normally used for decay heat removal during the latter stages of normal plant shutdown and when the reactor is held at cold shutdown for maintenance or refueling conditions. During all other plant operating modes, they are aligned to perform the low-head injection function.

LIST OF TABLES (Continued)

7.6.2-1 Interlock Table for Outer/Inner Isolation Valves

7.7.1-1 Plant Control System Interlocks

LIST OF FIGURES

7.1.1-1 Protection System Block Diagram

7.2.1-1 Setpoint Reduction Function for Overpower and Overtemperature ΔT Trips

7.2.1-2 Reactor Trip/Engineered Safety Features Actuation Mechanical Linkage

7.3.1-1 Typical Engineered Safety Features Test Circuits

7.3.1-2 Engineered Safeguards Test Cabinet (Index, Notes, and Legend)

7.6.2-1 Logic Diagram for the RHRS Isolation Valves

7.6.4-1 Functional Block Diagram of Accumulator Isolation Valve

7.6.5-1 Safety Injection System Recirculation Sump and RHR Suction Isolation Valves

7.7.1-1 Simplified Block Diagram of Reactor Control System

7.7.1-2 Control Bank Rod Insertion Monitor

7.7.1-3 Rod Deviation Comparator

7.7.1-4 Block Diagram of Pressurizer Pressure Control System

7.7.1-5 Block Diagram of Pressurizer Level Control System

7.7.1-6 Block Diagram of Steam Generator Water Level Control System

7.7.1-7 Block Diagram of Main Feedwater Pump Speed Control System

7.7.1-8 Block Diagram of Steam Dump Control System

7.7.1-9 Basic Flux-Mapping System

7.7.1-10 Actuation Logic System Architecture

7.7.2-1 Simplified Block Diagram Rod Control System

7.7.2-2 Control Bank D Partial Simplified Schematic Diagram Power Cabinets 1BD and 2BD

..\vegpfsar\chap7\7-toc.doc

failures or loss of redundancy which have occurred in the interval between tests, thus ensuring the availability of these systems.

7.1.2.7 Conformance to IEEE Standard 338-1975

The periodic testing of the reactor trip system and ESFAS conforms to the requirements of IEEE Standard 338-1975 with the following comments:

A. The surveillance requirements of the Technical Specifications for a protection system ensure that the system's functional operability is maintained comparable to the original design standards. Periodic tests at frequent intervals demonstrate this capability for the system, excluding sensors.

   Overall protection systems response times are demonstrated by test. Sensors within the Westinghouse scope are demonstrated to be adequate for this design by vendor testing, by onsite tests in operating plants with appropriately similar design, or by suitable type testing. The nuclear instrumentation system detectors are excluded, since they exhibit response-time characteristics such that delays attributable to them are negligible in the overall channel response time required for safety.

   Response time may be verified by actual response time tests in any series of sequential, overlapping, or total channel measurements, or by the summation of allocated sensor, signal processing, and actuation logic response times with actual response time tests on the remainder of the channel. Allocations for sensor response times may be obtained from: (1) historical records based on acceptable response time tests (hydraulic, noise, or power interrupt tests), (2) in place, onsite, or offsite (e.g., vendor) test measurements, or (3) vendor engineering specifications. Reference 5 provides the basis and methodology for using allocated sensor response times in the overall verification of the channel response time for specific sensors. Response time verification for other sensor types must be demonstrated by test.

   Reference 6 provides the basis and methodology for using allocated signal processing and actuation logic response times in the overall verification of the protection system channel response time. The allocations for sensor, signal conditioning, and actuation logic response times must be verified prior

to placing the component in operational service and reverified following maintenance that may adversely affect response time. In general, electrical repair work does not impact response time provided the parts used for repair are of the same type and value. Specific components may be replaced without verification testing. One example where response time could be affected is replacing the sensing assembly of a transmitter.

Each test shall include at least one logic train such that both logic trains are tested at least once per 36 months and one channel per function such that all channels are tested at least once every N times 18 months, where N is the total number of redundant channels in a specific protective function.

The measurement of response time provides assurance that the protective and ESF action function associated with each channel is completed within the time limit assumed in the accident analyses.

B. The reliability goals specified in section 4.2 of IEEE Standard 338-1975 are being developed, and adequacy of time intervals will be demonstrated at a later date.

C. The periodic time interval discussed in section 4.3 of IEEE Standard 338-1975 and specified in the Technical Specifications is conservatively selected to ensure that equipment associated with protection functions has not drifted beyond its minimum performance requirements. If any protection channel appears to be marginal or requires more frequent adjustments due to plant condition changes, the time interval is decreased to accommodate the situation until the marginal performance is resolved.

D. The test interval discussed in section 5.2 of IEEE Standard 338-1975 is developed primarily on past operating experience and modified if necessary to ensure that system and subsystem protection is reliably provided. Analytical methods for determining reliability are not used to determine test interval.

Based on the scope definition given in IEEE Standard 338-1975, no other systems described in chapter 7 are required to comply with this standard.

REFERENCES

1. T. W. T. Burnett, "Reactor Protection System Diversity in Westinghouse Pressurized Water Reactors," WCAP-7306, April 1969.

2. Marasco, F. W., and Siroky, R. M., "Westinghouse 7300 Series Process Control System Noise Tests," WCAP-8892-A, June 1977.

3. Letter dated April 20, 1977, R. L. Tedesco (NRC) to C. Eicheldinger (Westinghouse).

4. Mermigos, J. F., "Bypass Test Instrumentation for the Vogtle Electric Generating Plant, Units 1 and 2," WCAP-13376, Revision 2, September 1992.

5. WCAP-13632-P-A Revision 2, "Elimination of Pressure Sensor Response Time Testing Requirements," August 1995.

6. WCAP-14036-P Revision 1, "Elimination of Periodic Protection Channel Response Time Tests," December 1995.

which monitors numerous system variables, thereby providing protection system functional diversity. The extent of this diversity has been evaluated for a wide variety of postulated accidents.

Table 7.2.1-1 provides a list of reactor trips which are described below. Table 7.2.1-2 provides a listing of the protection system interlocks and their P designations.

A. Nuclear Overpower Trips

The specific trip functions generated are described below.

1. Power Range High Neutron Flux Trip

The power range high neutron flux trip circuit trips the reactor when two out of the four power range channels exceed the trip setpoint.

There are two bistables in each channel, each with its own trip setting used for a high-and low-range trip setting. The high trip setting provides protection during normal power operation and is always active. The low trip setting, which provides protection during startup, can be manually bypassed when two out of the four power range channels read above approximately 10-percent power (P-10). Three out of the four channels below 10 percent automatically reinstate the trip function.

2. Intermediate Range High Neutron Flux Trip

The intermediate range high neutron flux trip circuit trips the reactor when one out of the two intermediate range channels exceeds the trip setpoint. This trip, which provides protection during reactor startup, can be manually blocked if two out of four power range channels are above approximately 10-percent power (P-10). Three out of the four power range channels below this value automatically reinstate the intermediate range high neutron flux trip. The intermediate range channels (including detectors) are separate from the power range channels. The intermediate range channels can be individually bypassed at the nuclear instrumentation racks to permit channel testing during plant shutdown or prior to startup. This bypass action is monitored and annunciated on the control board.

3. Source Range High Neutron Flux Trip

The source range high neutron flux trip circuit trips the reactor when one out of the two source range channels exceeds the trip setpoint. This trip, which provides protection during reactor startup and plant shutdown, can be manually bypassed when one out of the two intermediate range channels reads above the P-6 setpoint value, and the trip is automatically reinstated when both intermediate range channels decrease below the P-6 setpoint value. This trip is automatically bypassed by two out of four logic from the power range protection interlock (P-10). This trip function can also be reinstated below P-10 by an administrative action requiring manual actuation of two control board-mounted switches. Each switch will reinstate the trip function in one of the two protection logic trains. The source range trip point is set between the P-6 setpoint (source range block power level) and the maximum source range power level. The channels can be individually bypassed at the nuclear instrumentation racks to permit channel testing during plant shutdown or prior to startup. This bypass action is monitored and annunciated on the control board.

4. Power Range High Positive Neutron Flux Rate Trip

This circuit trips the reactor when a sudden abnormal increase in nuclear power occurs in two out of four power range channels. This trip provides departure from nucleate boiling (DNB) protection against rod ejection accidents of low worth from midpower and is always active. (See subsection 15.4.8.)

Drawings 1X6AA02-227 and 1X6AA02-228 shows the logic for all of the nuclear overpower and rate trips.

3. Pressurizer High Water Level Trip

This trip is provided as a backup to the high pressurizer pressure trip and serves to prevent water relief through the pressurizer safety valves. This trip is blocked below P-7 to permit startup. The coincidence logic and interlocks of pressurizer high water level signals are given in table 7.2.1-1.

The trip logic for this function is shown in drawing 1X6AA02-230.

D. Reactor Coolant System Low Flow Trips

These trips protect the core from DNB in the event of a loss of coolant flow situation. Drawings 1X6AA02-228 and 1X6AA02-229 shows the logic for these trips. The means of sensing the loss of coolant flow are described below.

1. Low Reactor Coolant Flow

The parameter sensed is reactor coolant flow. Four elbow taps in each coolant loop are used as a flow device that indicates the status of reactor coolant flow. The basic function of this device is to provide information as to whether or not a reduction in flow has occurred. An output signal from two out of the three bistables in a loop would indicate a low flow in that loop.

The coincidence logic and interlocks are given in table 7.2.1-1

2. Reactor Coolant Pump Undervoltage Trip

This trip is provided to protect against low flow which can result from loss of voltage to more than one reactor coolant pump motor (e.g., from plant blackout or reactor coolant pump breakers opening).

Two undervoltage relays sense the voltage on the motor side of each reactor coolant pump breaker. These relays provide an output signal when the pump motor power bus voltage drops below approximately 70 percent of rated voltage. Signals from these relays are time delayed to prevent spurious trips caused by short-term voltage perturbations. The coincidence logic and interlocks are given in table 7.2.1-1

3. Reactor Coolant Pump Underfrequency Trip

This trip protects against low flow resulting from pump underfrequency, for example, a major power grid frequency disturbance. The function of this trip is to trip the reactor for an underfrequency condition greater than approximately 2.4 Hz.

Two underfrequency relays sense the underfrequency on the motorside of each reactor coolant pump breaker. Signals from these relays are time delayed to prevent spurious trips caused by short-term frequency perturbations. The coincidence logic and interlocks are given in table 7.2.1-1.

E. Steam Generator Trip

The specific trip function generated is low-low steam generator water level trip.

This trip protects the reactor from loss of heat sink. This trip is actuated on two out of four low-low water level signals occurring in any steam generator.

The logic is shown in drawing 1X6AA02-231.

F. Reactor Trip on a Turbine Trip (Anticipatory)

The reactor trip on a turbine trip is actuated by two-out-of-three logic from emergency trip fluid pressure signals or by all closed signals from the turbine steam stop valves. A turbine trip causes a direct reactor trip above P-9. The reactor trip on turbine trip provides additional protection and conservatism beyond that required for the health and safety of the public. This trip is included as part of good engineering practice and prudent design and satisfies the requirement of TMI Action Items II.K.3.10 and II.K.3.12.

The turbine provides anticipatory trips to the reactor protection system from contacts which change position when the turbine stop valves close or when the turbine emergency trip fluid pressure goes below its setpoint.

Components specified for use as sensors for input signals to the reactor protection system for "emergency trip oil pressure low" and "turbine stop valves close" will conform to the requirements of Institute of Electrical and Electronics Engineers (IEEE) 279-1971 and will be environmentally qualified. However, seismic criteria are not included in qualification, regarding mounting and location for that portion of the trip system located within non-Seismic Category 1 structures.

Loss of signal from equipment located within non-Seismic Category 1 structures will result in a trip input to the reactor protection system.

In addition, the following measures will be taken to ensure the integrity of the cabling to the solid-state protection system (SSPS):

1. Inputs from the turbine steam stop valves will originate from four separate limit switches (one per valve), each of which is dedicated to providing an input to one channel of the SSPS. Cables carrying these signals will be routed in individual conduits. The four circuits will be separated from one another and from non-Class 1E circuits and identified according to the criteria imposed on Class 1E circuits, from their source up to their terminations within the SSPS cabinets.

   Additionally, fuses have been added in each turbine stop valve limit switch circuit before the circuit enters the turbine building. In the event of multiple ground faults, the fuses will isolate the affected channels and provide a trip signal input to the SSPS.

2. Input from the emergency trip oil pressure originates from three separate pressure transmitters powered from the balance of plant safety-related process instrumentation cabinet. The cables for these transmitters are routed in individual conduits within the turbine building, according to the criteria imposed on Class 1E circuits.

The logic for this trip is shown in drawings 1X6AA02-228 and 1X6AA02-240.

G. Safety Injection Signal Actuation Trip

A reactor trip occurs when the safety injection system is actuated. The means of actuating the safety injection system are described in section 7.3. This trip protects the core against a loss of reactor coolant or a steam line rupture.

Drawings 1X6AA02-232 and 1X6AA02-519 show the logic for this trip.

H. Manual Trip

The manual trip consists of two switches with two-train outputs on each switch on the main control board, and two single-train switches, one on each of the shutdown panels. One of the two-train outputs is used to actuate the train A reactor trip breaker, and the other output actuates the train B reactor trip breaker. Operating a manual trip switch removes the voltage from the undervoltage trip coil and energizes the shunt trip coil of each breaker.

There are no interlocks which can block this trip. Drawing 1X6AA02-227 shows the manual trip logic. The design conforms to Regulatory Guide 1.62, as shown in figure 7.2.1-2.

I. Solid State Protection System General Warning Alarm Reactor Trip

General warning alarm reactor trip is discussed in paragraph 7.2.2.2.3.

7.2.1.1.3 Reactor Trip System Interlocks

A. Power Escalation Permissives

The overpower protection provided by the out of core nuclear instrumentation consists of three discrete, but overlapping, ranges. Continuation of startup operation or power increase requires a permissive signal from the higher range instrumentation channels before the lower range level trips can be manually blocked by the operator.

A one-out-of-two intermediate range permissive signal (P-6) is required prior to source range trip blocking. Source range trips are automatically reactivated when both intermediate range channels are below the permissive (P-6) setpoint. There are two manual reset switches for administratively reactivating the source range level trip, if required, when it is between the permissive P-6 and P-10 setpoints. Source range level trip block is always maintained when above the permissive P-10 setpoint.

The intermediate range level trip and power range (low setpoint) trip can only be blocked after satisfactory operation and permissive information are obtained from two out of four power range channels. Four individual blocking switches are provided so that the low range power range trip and intermediate range trip can be independently blocked (one switch for each train).

These trips are automatically reactivated when three out of the four power range channels are below the permissive (P-10) setpoint, thus ensuring automatic activation of more restrictive trip protection.

The development of permissives P-6 and P-10 is shown in drawing 1X6AA02-228. All of the permissives are digital. They are derived from analog signals in the nuclear power range and intermediate range channels.

B. Blocks of Reactor Trips at Low Power

Interlock P-7 blocks a reactor trip at low power (below approximately 10 percent of full power) on a low reactor coolant flow in more than one loop, reactor coolant pump undervoltage, reactor coolant pump underfrequency, pressurizer low pressure, or pressurizer high water level. See drawings 1X6AA02-229 and 1X6AA02-230 for permissive applications. The low power signal is derived from three out of four power range neutron flux signals below the setpoint in coincidence with two out of two turbine impulse chamber pressure signals below the setpoint (low plant load). See drawings 1X6AA02-228 and 1X6AA02-240 for the derivation of P-7.

The P-8 interlock blocks a reactor trip when the plant is below approximately 48 percent of full power, on a low reactor coolant flow in any one loop. The block action (absence of the P-8 interlock signal) occurs when three out of four neutron flux power range signals are below the setpoint. Thus, below the P-8 setpoint, the reactor will be allowed to operate with one inactive loop, and trip will not occur until two loops are indicated as low flow. See drawing 1X6AA02-228 for derivation of P-8 and drawing 1X6AA02-229 for applicable logic.

7.2.1.1.4 Coolant Temperature Sensor Arrangement

The hot and cold leg temperature signals required for input to the protection and control functions are obtained using thermowell-mounted RTDs installed in each reactor coolant loop. The hot leg temperature measurement in each loop is accomplished using three fast-response, dual-element, narrow-range RTDs mounted in thermowells. The three thermowells in each loop are located within hot leg scoops 120 degrees apart in the cross-sectional plane of the piping, with one located at the top of the pipe, to obtain a representative temperature sample. The scoops have a flow hole machined into the end to facilitate the flow of water through holes in the leading edge of the scoop, past the thermowell, and back into the flow stream.

The temperatures measured by the three thermowell-mounted RTDs are different due to hot leg temperature streaming and vary as a function of thermal power. Therefore, these signals are averaged using electronic weighting to generate a hot leg average temperature. Provisions are incorporated into the process electronics to allow for operation with only two RTDs in service. The two RTD measurements can be biased to compensate for the loss of the third RTD as described in reference 4.

The cold leg temperature measurement in each loop is accomplished by one fast-response, dual-element, narrow-range RTD mounted in a thermowell.

7.2.1.1.5 Pressurizer Water Level Reference Leg Arrangement

The design of the pressurizer water level instrumentation employs the usual tank level measuring arrangement, using differential pressure between an upper and a lower tap on a column of water. A reference leg connected to the upper tap is kept full of water by condensation of steam at the top of the leg.

7.2.1.1.6 Analog System

The analog system consists of two instrumentation systems, the process instrumentation system, and the nuclear instrumentation system.

Process instrumentation includes those devices (and their interconnection into systems) which measure temperature, pressure, fluid flow, fluid level in tanks or vessels, and, occasionally, physicochemical parameters such as fluid

conductivity or chemical concentration. Process instrumentation specifically excludes nuclear and radiation measurements. The process instrumentation includes the process measuring devices, power supplies, indicator, recorders, alarm actuating devices, controllers, signal conditioning devices, etc., which are necessary for day-to-day operation of the nuclear steam supply system, as well as for monitoring the plant and providing initiation of protective functions.

The primary function of nuclear instrumentation is to protect the reactor by monitoring the neutron flux and generating appropriate trips and alarms for various phases of reactor operating and shutdown conditions. It also provides a secondary control function and indicates reactor status during startup and power operation. The nuclear instrumentation system uses information from three separate types of instrumentation channels to provide three discrete protection levels. Each range of instrumentation (source, intermediate, and power) provides the necessary overpower reactor trip protection required during operation in that range. The overlap of instrument ranges provides reliable continuous protection, beginning with source level through the intermediate and low power level. As the reactor power increases, the overpower protection level is increased by administrative control and in-plant procedures after satisfactory higher range instrumentation operation is obtained. Automatic reset to more restrictive trip protection is provided when reducing power.

Various types of neutron detectors, with appropriate solid-state electronic circuitry, are used to monitor the leakage neutron flux from a completely shutdown condition to 200 percent of full power. The neutron flux covers a wide range between these extremes. Therefore, monitoring with several ranges of instrumentation is necessary.

The lowest range (source range) covers 7 decades of leakage neutron flux. The lowest observed count rate depends on the strength of the neutron sources in the core and the core multiplication associated with the shutdown reactivity. This is generally greater than two counts per second. The intermediate range covers 8 decades to 200 percent full power. Detectors and instrumentation are chosen to provide overlap between the higher portion of the source range and the lower portion of the intermediate range. The power range covers approximately 2 decades of the total instrumentation range to 120 percent full power. This is a linear range that overlaps with the higher portion of the intermediate range.

The system described above provides control room indication and recording of signals proportional to reactor neutron flux during core loading, shutdown, startup, and power operation, as well as during subsequent refueling. Startup rate indication for the source and intermediate range channels is provided at the control board. Reactor trip, rod stop, control, and alarm signals are transmitted to the reactor control and protection system for automatic plant control. Equipment failures and test status information are annunciated in the control room.

See references 1 and 2 for additional background information on the process and nuclear instrumentation.

7.2.1.1.7 Solid-State Logic Protection System

The solid-state logic protection system takes binary inputs (voltage/no voltage) from the process and nuclear instrument channels (nuclear steam supply system/balance of plant) and from field instrument channels corresponding to conditions (normal/abnormal) of plant parameters. The system combines these signals in the required logic combination and generates a trip signal (no voltage) to the undervoltage trip attachment and shunt trip auxiliary relay coils of the reactor trip circuit breakers when the necessary combination of signals occur. The system also provides annunciator, status light, and computer input signals which indicate the condition of bistable input signals, partial trip, and full trip functions and the status of the various blocking, permissive, and actuation functions. In addition, the system includes means for semiautomatic testing of the logic circuits. See reference 3 for additional background information.

7.2.1.1.8 Isolation Amplifiers

In certain applications, control signals are derived from individual protection channels through isolation amplifiers contained in the protection channel, as permitted by IEEE 279-1971.

In all of these cases, analog signals derived from protection channels for nonprotective functions are obtained through isolation amplifiers located in the analog protection racks. By definition, nonprotective functions include those signals used for control, remote process indication, and computer monitoring. Refer to paragraph 7.1.2.2.1 for a discussion of electrical separation of control and protection functions.

- Maximum system pressure = 2735 psig.
- Fuel rod maximum linear power for determination of protection setpoints = 22.4 kW/ft.

The accident analyses described in section 15.4 demonstrate that the functional requirements, as specified for the reactor trip system, are adequate to meet the above considerations, even assuming, for conservatism, adverse combinations of instrument errors. (Refer to table 15.3.1-1.) A discussion of the safety limits associated with the reactor core and reactor coolant system, plus the limiting safety system setpoints, are presented in the Technical Specifications.

7.2.1.2.5 Abnormal Events

The malfunctions, accidents, or other unusual events which could physically damage reactor trip system components or could cause environmental changes are as follows:

- Earthquakes. (See chapters 2 and 3.)
- Fire. (See subsection 9.5.1.)
- Explosion - hydrogen buildup inside containment. (See section 6.2.)
- Missiles. (See section 3.5.)
- Flood. (See chapters 2 and 3.)
- Wind and tornadoes. (See section 3.3.)

The reactor trip system fulfills the requirements of IEEE 279-1971 to provide automatic protection and to provide initiating signals to mitigate the consequences of faulted conditions. The reactor trip system is protected against destruction of the system from fires, explosions, floods, wind, and tornadoes. (See each item above.)

7.2.1.2.6 Minimum Performance Requirements

A. Reactor Trip System Response Times

Reactor trip system response time is defined in section 7.1. Typical maximum allowable time delays in generating the reactor trip signal are tabulated in table 7.2.1-3. See paragraph 7.1.2.7 A for a discussion of periodic response time verification.

B. Reactor Trip Accuracies

Accuracy is defined in section 7.1. Reactor trip accuracies are tabulated in table 7.2.1-3. An additional discussion on accuracy is found in subsection 7.1.2.

C. Protection System Ranges

Typical protection system ranges are tabulated in table 7.2.1-3. Range selection for the instrumentation covers the expected range of the process variable being monitored during power operation. Limiting setpoints are at least 5 percent from the end of the instrument span.

7.2.1.3 Final System Drawings

Functional block diagrams, electrical elementaries, and other drawings required to perform a safety review are listed in the safety-related drawing package. (See section 1.7.)

TABLE 7.2.1-2 (SHEET 1 OF 2)

PROTECTION SYSTEM INTERLOCKS

Designation	Derivation	Function
Power Escalation Permissives		
P-6	Presence of P-6: 1/2 neutron flux (intermediate range) above approximately 2.0×10^{-5}% rated thermal power	Allows manual block of source range reactor trip
	Absence of P-6: 2/2 neutron flux (intermediate range) below setpoint	Defeats the block of source range reactor trip
P-10	Presence of P-10: 2/4 neutron flux (power range) above setpoint	Allows manual block of power range (low setpoint) reactor trip
		Allows manual block of intermediate range reactor trip and intermediate range rod stops (C-1)
		Blocks source range reactor trip (backup for P-6)
	Absence of P-10: 3/4 neutron flux (power range) below setpoint	Defeats the block of power range (low setpoint) reactor trip
		Defeats the block of intermediate range reactor trip and intermediate range rod stops (C-1)
		Inputs to P-7

TABLE 7.2.1-3 (SHEET 2 OF 2)

Reactor Trip Signal	Typical Range	Typical Trip Accuracy	Typical Time Response (s)
Reactor coolant pump undervoltage	0 to 100% rated voltage		≤ 1.5
Reactor coolant pump underfrequency	3 to 80 Hz	±0.1 Hz	≤ 0.6
Low-low steam generator water level[b]	±~6 ft from nominal full load water level	±2.3% of ΔP signal over pressure range of 700 to 1200 psig	≤ 2
Turbine trip - oil pressure	0 to 2000 psig	-	N/A

a. Neutron detectors are exempt from response time testing. Response time of the neutron flux signal portion of the channel shall be measured from detector output or input of first electronic component in channel. (This provision is not applicable to construction permits docketed after January 1, 1978. See Regulatory Guide 1.118, June 1978.)

b. See also Technical Specification 3.3.3.

c. FSAR analysis assumptions:

RTD response time:	≤ 4 s
Electronic delay time:	≤ 4 s (based upon a 2-s ΔT filter time constant and a 2-s trip time delay)
ΔT filter time constant:	0.0 s (not modeled explicitly; included as part of 4-s electronics delay)

For above analysis values, following are required channel response times for an RTD time response of no greater than 4.4 s.

1.	Overtemperature ΔT, T_{avg} input:	≤ 3.6 s
2.	Overtemperature ΔT, pressurizer pressure input:	≤ 4 s
3.	Overtemperature ΔT, nuclear flux input:	≤ 4 s
4.	Overpower ΔT, T_{avg} input:	≤ 6.565 s
5.	ΔT input:	≤ 2.037 s

ΔT input response time includes effect of filter time constant. If response time verification is not performed with time constants on, the acceptance criteria is ≤ 1.6 s.

With the exception of the overpower ΔT, T_{avg} input, for longer RTD time constants than 4.4 s, the above channel response times can be reduced by the amount the RTD time constant exceeds 4.4 s.

safety. All transmitted signals (flow, pressure, temperature, etc.) which can cause a reactor trip will either be indicated or recorded for every channel, including all neutron flux power range currents (top detector, bottom detector, algebraic difference, and average of bottom and top detector currents).

Any reactor trip will actuate an alarm and an annunciator. Such protective actions are indicated and identified down to the channel level.

Alarms and annunciators are also used to alert the operator of deviations from normal operating conditions, so that he may take appropriate corrective action to avoid a reactor trip. Actuation of any rod stop or trip of any reactor trip channel will actuate an alarm.

U. System Repair

The system is designed to facilitate the recognition, location, replacement, and repair of malfunctioning components or modules. Refer to the discussion in item J above.

7.2.2.3 Specific Control and Protection Interactions

7.2.2.3.1 Neutron Flux

Four power range neutron flux channels are provided for overpower protection. An isolated auctioneered high signal is derived by auctioneering of the four channels for automatic rod control. If any channel fails in such a way as to produce a low output, that channel is incapable of proper overpower protection but will not cause control rod movement because of the auctioneer. Two out of four overpower trip logic will ensure an overpower trip if needed, even with an independent failure in another channel.

In addition, channel deviation signals in the control system will give an alarm if any neutron flux channel deviates significantly from the average of the flux signals. Also, the control system will respond only to rapid changes in indicated neutron flux; slow changes or drifts are compensated by the temperature control signals. Finally, an overpower signal from any nuclear power range channel will block manual rod withdrawal. Automatic rod withdrawal capability of the rod control system has been disabled. The setpoint for this rod stop is below the reactor trip setpoint.

7.2.2.3.2 Coolant Temperature

The accuracy of the resistance temperature detector (RTD) loop temperature measurements is demonstrated during plant preoperational tests by comparing temperature measurements from all loop RTDs with one another, as well as with the temperature measurements obtained from the wide range RTDs located in the hot leg and cold leg piping of each loop. The comparisons are done with the RCS in an isothermal condition. The linearity of the ΔT measurements obtained from the hot leg and cold leg loop RTDs, as a function of plant power, is also checked during plant startup tests. The absolute value of ΔT versus plant power is not important, per se, as far as reactor protection is concerned. Reactor trip system setpoints are based upon percentages of the indicated ΔT at nominal full power rather than on absolute values of ΔT. This is done to account for loop differences which are inherent. Therefore, the percent ΔT scheme is relative, not absolute, and therefore provides better protective action without the expense of accuracy. For this reason, the linearity of the ΔT signals as a function of power is of importance rather than the absolute values of the ΔT. As part of the plant preoperational tests, the loop RTD signals will be compared with the core exit thermocouple signals.

Reactor control is based upon signals derived from protection system channels after isolation by isolation amplifiers, such that no feedback effect can perturb the protection channels.

Since control is based on the average temperature of the loop with the highest temperature, the control rods are always moved based upon the most pessimistic temperature measurement with respect to margins to departure from nucleate boiling. A spurious low average temperature measurement from any loop temperature control channel will cause no control action. A spurious high average temperature measurement will cause rod insertion (safe direction).

Channel deviation signals in the control system will give an alarm if any temperature channel deviates significantly from the auctioneered (highest) value. Manual rod withdrawal blocks and turbine runback (power demand reduction) will also occur if any two out of the four overtemperature or overpower ΔT channels indicate an adverse condition.

7.2.2.3.3 Pressurizer Pressure

The pressurizer pressure protection channel signals are used for high- and low-pressure protection and as inputs to the

In addition, the three-element feedwater controller incorporates reset action on the level error signal, such that with expected controller settings, a rapid increase or decrease in the flow signal would cause only a small change in level, before the controller would compensate for the level error. A slow change in the feedwater signal would have no effect at all. A spurious low or high steam flow signal would have the same effect as high or low feedwater signal, as discussed above.

A spurious high steam generator water level signal from the protection channel used for control will tend to close the feedwater valve. A spurious low steam generator water level signal will tend to open the feedwater valve. Before a reactor trip would occur, two out of four channels in a loop would have to indicate a low-low water level. Any slow drift in the water level signal will permit the operator to respond to the level alarms and to take corrective action.

Automatic protection is provided in case the spurious high level reduces feedwater flow sufficiently to cause low-low level in the steam generator. Automatic protection is also provided in case the spurious low-level signal increases feedwater flow sufficiently to cause high level in the steam generator. A turbine trip and feedwater isolation would occur on two out of four high-high steam generator water level in any loop.

7.2.2.4 Additional Postulated Accidents

Loss of plant instrument air or loss of component cooling water is discussed in subsection 7.3.1. Load rejection and turbine trip are discussed in further detail in section 7.7.

The control interlocks, called rod stops, that are provided to prevent abnormal power conditions which could result from excessive control rod withdrawal are discussed in paragraph 7.7.1.4 and listed on table 7.7.1-1. Excessively high-power operation (which is prevented by blocking of manual rod withdrawal), if allowed to continue, might lead to a safety limit (as given in the Technical Specifications) being reached. The automatic rod withdrawal capability of the rod control system has been disabled.

Before such a limit is reached, protection will be available from the reactor trip system. At the power levels of the rod block setpoints, safety limits have not been reached. Therefore, these rod withdrawal stops do not come under the scope of safety-related systems and are considered control systems.

7.2.2.5 Tests and Inspections

The reactor trip system meets the testing requirements of IEEE 338-1975, as discussed in paragraph 7.1.2.7. The testability of the system is discussed in paragraph 7.2.2.2.3. The initial and subsequent test intervals are specified in the Technical Specifications. Written test procedures and documentation, conforming to the requirements of IEEE 338-1975, will be available for audit by responsible personnel. Periodic testing conforms with Regulatory Guide 1.22, as discussed in subsections 7.1.2 and 7.2.2.

7.3.1.1.2.3 Spatially Dependent Variables. The only variable sensed by the ESFAS which has spatial dependence is reactor coolant temperature. The effect on the measurement is neutralized by electronic averaging.

7.3.1.1.2.4 Limits, Margins, and Levels. Prudent operational limits, available margins, and setpoints before onset of unsafe conditions requiring protective action are discussed in chapter 15 and the Technical Specifications.

7.3.1.1.2.5 Abnormal Events. The malfunctions, accidents, or other unusual events which could physically damage protection system components or could cause environmental changes are as follows:

A. LOCA. (See chapter 15.)

B. Steam breaks. (See chapter 15.)

C. Earthquakes. (See chapters 2 and 3.)

D. Fire. (See subsection 9.5.1.)

E. Explosion-hydrogen buildup inside containment. (See subsection 6.2.5.)

F. Missiles. (See section 3.5.)

G. Flood. (See chapters 2 and 3.)

7.3.1.1.2.6 Minimum Performance Requirements. Minimum performance requirements are as follows:

A. System Response Times

See paragraph 7.1.2.7A for a discussion of periodic response time verification.

The ESFAS response time is defined as the interval required for the ESF sequence to be initiated subsequent to the time that the appropriate variable(s) exceed the setpoint(s). The ESF sequence is initiated by the output of the ESFAS. This is brought about by the operation of the dry contacts of the slave relays (600 and 700 series relays) in the output cabinets of the solid-state protection system. The response times include the time interval between the time the parameter sensed by the sensor exceeds the safety setpoint and the time the solid-state protection system

slave relay dry contacts are operated. These values are maximum allowable values consistent with the safety analyses and the Technical Specifications and are systematically verified during plant preoperational startup tests. For the overall ESF response time refer to table 16.3-2. For the overall reactor trip system instrumentation response time refer to table 16.3-1. These maximum delay times include all compensation and therefore require that any such network be aligned and operating during verification testing.

The ESFAS is always capable of having response time tests performed using the same methods as those tests performed during the preoperational test program or following significant component changes.

Maximum allowable time delays in generating the actuation signal for loss-of-coolant protection are given in table 7.3.1-4.

Maximum allowable time delays in generating the actuation signal for secondary system protection are given in table 7.3.1-5.

B. System Accuracies

Typical accuracies required for generating the required actuation signals for loss-of-coolant protection are given in table 7.3.1-4.

Typical accuracies required in generating the required actuation signals for secondary system protection are given in table 7.3.1-5.

C. Ranges of Sensed Variables

Typical ranges of sensed variables to be accommodated until conclusion of protective action is ensured are given in table 7.3.1-4 for loss-of-coolant protection.

Typical ranges of sensed variables to be accommodated until conclusion of protective action is ensured are given in table 7.3.1-5 for secondary system protection.

7.3.1.1.3 Final System Drawings

The schematic diagrams for the system discussed in this section are identified in section 1.7.

TABLE 7.3.1-4

PRIMARY SYSTEM ACCIDENTS AND REQUIRED INSTRUMENTATION
RUPTURES IN SMALL PIPES, CRACKS IN LARGE PIPES,
RUPTURES OF LARGE PIPES, AND STEAM GENERATOR TUBE RUPTURE

Channel	Response Time(s)[a]	Accuracy[a]	Range
Pressurizer pressure	(c)	±1.75 percent of span	1700 to 2500 psig
Containment pressure[b]	(d)	±1.75 percent of span	0 to 115 percent of containment design pressure

a. See section 7.1 for definitions of engineered safety features actuation system response time and accuracy.

b. Not required for steam generator tube rupture.

c. Total time from step change in pressurizer pressure until start of safety injection pumps is 27 s with offsite power available and 40 s with offsite power unavailable.

d. Total time from step change in containment pressure until full containment spray is obtained is 94 s (includes 29 s for diesel start and sequencing and 65 s for filling the spray header).

TABLE 7.3.1-5

SECONDARY SYSTEM ACCIDENTS AND REQUIRED INSTRUMENTATION, MINOR SECONDARY SYSTEM PIPE BREAK, AND MAJOR SECONDARY SYSTEM PIPE BREAK

Item	Channel	Response Time(s) [a]	Accuracy [a]	Range
1	Containment pressure [b]	(b)	±1.75 percent of full scale	0 to 115 percent of containment design pressure
2	Steam line pressure	10.0 [c]	±2.25 percent of span	0 to 1300 psig
3	Steam line pressure rate	See item 2 for sensor characteristics		
4	T_{avg}	N/A	±2°F	530 to 630°F
5	Pressurizer pressure	(d)	±1.75 percent of span	1700 to 2500 psig

a. See section 7.1 for definitions of engineered safety features actuation system response time and accuracy.

b. Total time from step change in containment pressure until full containment spray is obtained is 94 s (includes 29 s for diesel start and sequencing and 65 s for filling the spray header).

c. Total time from step change in steam pressure until steam line isolation valves are fully closed.

d. Total time from step change in pressurizer pressure until start of safety injection pumps is 27 s with offsite power available and 40 s with offsite power unavailable.

TABLE 7.4.2-1 (SHEET 3 OF 10)

Valve/ Switch/ Indicator	Function[a]	Location[b] CR	PSDA	PSDB	Local	ASI[c]
LI5116	CST No. 2 level	X	X		X	
LI501	SG No. 1 level	X	X		X	
LI504	SG No. 4 level	X	X		X	
PI514	SG No. 1 press	X	X			
PI544	SG No. 4 press	X	X			
HS5131	AFW pump A	X	X			
PIC3000	SG No. 1 press control	X	X			
PIC3030	SG No. 4 press control	X	X			
HV5118	CST No. 2 to AFW B	X		X		
HV5132	AFW B to SG No. 2	X		X		
HV5134	AFW B to SG No. 3	X		X		
FI5151	Flow to SG No. 2	X		X	X	
FI5153	Flow to SG No. 3	X		X	X	
LI502	SG No. 2 level	X		X	X	X
LI503	SG No. 3 level	X		X	X	X
PI455	Pressurizer pressure	X	X		X	
PI456	Pressurizer pressure	X		X		
PI457	Pressurizer pressure	X	X			
PI458	Pressurizer pressure	X		X		
PI514	SG No. 1 pressure	X			X	
PI524	SG No. 2 pressure	X			X	
PI525	SG No. 2 pressure	X		X		
PI534	SG No. 3 pressure	X			X	
PI535	SG No. 3 pressure	X		X		
PI544	SG No. 4 pressure	X			X	
HS5130	AFW pump B	X		X		
PIC3010	SG No. 2 press containment	X		X		
PIC3020	SG No. 3 press containment	X		X		
HV5113	CST No. 2 to AFW C	X			X	
HV5120	AFW C to SG No. 4	X			X	
HV5122	AFW C to SG No. 1	X			X	
HV5125	AFW C to SG No. 2	X			X	
HV5127	AFW C to SG No. 3	X			X	
HV3009	SG No. 1 to AFW C	X			X	
LI5101	CST No. 1 level			X		
LI5104	CST No. 2 level			X		
HV3019	SG No. 2 to AFW C	X			X	
HV5106	Steam to AFW C	X			X	

TABLE 7.4.2-1 (SHEET 4 OF 10)

Valve/ Switch/ Indicator	Function[a]	Location[b] CR	PSDA	PSDB	Local	ASI[c]
SI15109	AFW C speed	X			X	
PI5105	Main Steam to AFW C turbine press	X			X	
HS15111	AFW C trip and throttle	X			X	
PDIC5180	AFW C speed control	X			X	
TI413	LOOP No.1 cold	X	X			
TI413	LOOP No.1 hot	X	X			
TI443	LOOP No.4 cold	X	X			
TI443	LOOP No.4 hot	X	X			
TI423	LOOP No.2 cold	X		X		X
TI423	LOOP No.2 hot	X		X		
TI433	LOOP No.3 cold	X		X		X
TI433	LOOP No.3 hot	X		X		
TI10055	Core exit temperature (loop 2 core quadrant on Unit 1) (loop 1 core quadrant on Unit 2)			X		X
TI10056	Core exit temperature (loop 3 core quadrant on Unit 1) (loop 4 core quadrant on Unit 2)			X		X
HS10469	Pressurizer backup heater	X	X			
HS10470	Pressurizer backup heater	X		X		
HS4516	DG A	X			X	
HS4517	DG B	X			X	
HS9045	DG B fuel oil transfer pump 3	X			X	
HS9047	DG B fuel oil transfer pump 4	X			X	
HS998	SI pump A	X	X			
HS999	SI pump B	X		X		
HV8701A	RHR suction	X	X			
HV8701B	RHR suction	X	X			
HV8812A	RWST to RHR	X	X			

TABLE 7.5.2-1 (SHEET 3 OF 14)

Variable	Range/ Status	Type/ Category	Qualification Environ-mental	Qualification Seismic	Number of Instru-ments	Control Room Indication	Implemen-tation Date	Power Sup-ply	EOF Indica-tion	TSC Indica-tion	Conformance	ERDS Parameter[ae]
Reactor vessel water level	Upper range: 60-120 percent Full range: 0-120 percent Dynamic Head: 0-120 percent liquid	B1, C2, D2	Yes	Yes	2 per unit	Plasma display	Core load	1E	Yes	Yes	Conforms to Reg. Guide 1.97, Rev. 2	Yes
Containment isolation valve status	Open/ closed	C1,[al] C2, D2	Yes	Yes	1 per valve	1 pair of[ak] lights per valve	Complete	1E	Yes	Yes	(a)	No
Containment hydrogen concentration	0 to 10 percent partial pressure	B1, C1	Yes	Yes	2 per unit	2 meters 1 recorder plasma display	Complete	1E	Yes	Yes	Conforms to Reg Guide 1.97, Rev 2	Yes
Containment pressure (extended range)	-5 to 160 psig	C1, C2	Yes	Yes	2 per unit	Plasma display	Core load	1E	Yes	Yes	Conforms to Reg Guide 1.97, Rev 2	Yes
Plant vent[t] level radiogas	10^{-6} to $10^{4}\mu Ci/cm^{3}$	C2, E2	Yes[o]	Yes[x]	1 per unit	Communication console	Core load	Non-1E[p]	Yes	Yes	Conforms to Reg Guide 1.97, Rev 2	Yes
Plant vent par-ticulates and halogen (pas-sive filters)	NA	C2, E2	Yes	Yes	NA	NA	Complete	NA	NA	NA	Conforms to Reg Guide 1.97, Rev 2	No
Auxiliary building radiation level (portable sampling)	NA	C3	No	No	NA	NA	Complete	NA	NA	NA	Conforms to Reg Guide 1.97, Rev 2	No
Site environ-mental radiation level (portable sampling)	NA	C3, E3	No	No	NA	NA	Complete	NA	NA	NA	Conforms to Reg Guide 1.97, Rev 2	No

TABLE 7.5.2-1 (SHEET 4 OF 14)

Variable	Range/ Status	Type/ Category	Qualification Environ-mental	Qualification Seismic	Number of Instru-ments	Control Room Indication	Implemen-tation Date	Power Sup-ply	EOF Indica-tion	TSC Indica-tion	Conformance	ERDS Parameter[ae]
RCS activity	N/A	C3	No	No	NA	No	Complete	NA	No	No	(b)	No
Reactor coolant Pump status	Running/ stopped	D2	Yes	Yes	1 per pump	1 pair of lights per pump plasma display	Complete	1E	Yes	Yes	(d)	No
Pressurizer pressure	1700/ 2500 psig	D2	Yes	Yes	4 per unit	4 meters	Complete	1E	Yes	Yes	(d)	No
Power-operated relief (PORV) valve status	Open/ closed	D2	Yes	Yes	1 per valve	1 pair of lights per valve	Complete	1E	Yes	Yes	Conforms to Reg Guide 1.97, Rev 2	No
Primary safety valve status	Open/ Closed	D2	Yes	Yes	1 per valve	Plasma display [q]	Core load	1E	Yes	Yes	Conforms to Reg Guide 1.97, Rev 2	No
Pressurizer heater current	0-800 amps	D2	Yes[o]	No	2 per unit	[q]	Core load	Non-1E UPS	Yes	Yes	Conforms to Reg. Guide 1.97, Rev. 2	No
Pressurizer relief tank temperature	50° to 350°F	D3	No	No	1 per unit	1 meter	8/1/86	Non-1E UPS	Yes	Yes	(w)	No
Charging system flow	0 to 200 gal/min	D2	Yes[o]	No	1 per path	1 meter	Core load	Non-1E UPS	Yes	Yes	Conforms to Reg Guide 1.97, Rev 2	Yes
Emergency charging flow	0 to 150 gal/min	D2	Yes	Yes	1 per path	2 meters	Core load	Non-1E UPS	Yes	Yes	Conforms to Reg Guide 1.97, Rev 2	No
Letdown flow	0 to 200 gal/min	D2	Yes[a]	No	1 per path	1 meter	Core load	Non-1E UPS	Yes	Yes	Conforms to Reg Guide 1.97, Rev 2	No
Emergency letdown	0 to 80 gal/min	D2	Yes	Yes	1 per path	2 meters	Core load	Non-1E UPS	Yes	Yes	Conforms to Reg Guide 1.97, Rev 2	No
Volume control tank level	0 to 100 percent of span	D2	Yes[o]	No	1 per tank	1 meter	Complete	Non-1E UPS	Yes	Yes	Conforms to Reg Guide 1.97, Rev 2	No
Chemical and volume control system valve status	Open/ closed	D2	Yes	Yes	1 per valve	1 pair of[ab] lights per valve	Complete	1E/ Non-1E UPS	Yes	Yes	(d)	No

TABLE 7.5.2-1 (SHEET 6 OF 14)

Variable	Range/ Status	Type/ Category	Qualification Environmental	Qualification Seismic	Number of Instruments	Control Room Indication	Implementation Date	Power Supply	EOF Indication	TSC Indication	Conformance	ERDS Parameter[ae]
High-head safety injection	0 to 1000 gal/min	D2	Yes	Yes	1 per valve	1 meter	Complete	1E	Yes	Yes	Conforms to Reg Guide 1.97, Rev 2	Yes
Low-head safety injection	0 to 800 gal/min	D2	Yes	Yes	1 per train	2 meters	Complete	1E	Yes	Yes	Conforms to Reg Guide 1.97, Rev 2	No
Main feedwater isolation valve status	Open/ closed	D2	Yes	Yes	1 per valve	2 pair of lights per valve	Complete	1E	Yes	Yes	(d)	No
Emergency core[u] cooling system valve status	Open/ closed	D2	Yes	Yes	1 per valve	1 pair of lights per valve	Complete	1E	Yes	Yes	(d)	No
Accumulator pressure	0 to 700 psig	D3	No	No	1 per tank	4 meters	Core load	Non-1E UPS	Yes	Yes	(aj)	No
Safety injection pump status	Running/ stopped	D2	Yes	Yes	1 per pump	1 pair of lights per pump	Complete	1E	Yes	Yes	(d)	No
Auxiliary feedwater valve status	Open/ closed	D2	Yes	Yes	1 per valve	1 pair of lights per valve	Complete	1E	Yes	Yes	(d)	No
Feedwater isolation bypass valve status	Open/ closed	D2	Yes	Yes	1 per valve	1 pair of[ab] lights per valve	Complete	1E	Yes	Yes	(d)	No
Auxiliary feedwater pump status	Running/ stopped	D2	Yes	Yes	1 per pump	1 pair of lights per pump	Complete	1E	Yes	Yes	Conforms to Reg Guide 1.97, Rev 2	No
Containment spray valve status	Open/ closed	D2	Yes	Yes	1 per valve	1 pair of lights per valve	Complete	1E	Yes	Yes	(d)	No
Containment spray pump status	Running/ stopped	D2	Yes	Yes	1 per pump	1 pair of lights per pump	Complete	1E	Yes	Yes	(d)	No
Containment fan cooler damper position	Open/ closed	D2	Yes	Yes	1 per damper	1 pair of lights per damper	Complete	1E	Yes	Yes	(d)	No

TABLE 7.5.2-1 (SHEET 9 OF 14)

Variable	Range/ Status	Type/ Category	Qualification Environ-mental	Qualification Seismic	Number of Instru-ments	Control Room Indication	Implemen-tation Date	Power Sup-ply	EOF Indica-tion	TSC Indica-tion	Conformance	ERDS Parameter[ae]
Reactor trip breaker position	Tripped/ not tripped	D2	Yes	Yes	1 per breaker	1 pair of lights per breaker	Complete	1E	Yes	Yes	(d)	No
SI actuation	Actuated/ not actuated	D2	Yes	Yes	1 per train	1 light per unit	Complete	1E	Yes	Yes	(d)	No
Turbine stop valve status	Closed/ not closed	D2	No[o]	No	1 per valve	1 light per valve	Complete	Non-1E	Yes	Yes	(d)	No
First stage turbine pressure	0 to 120% power	D2	Yes	Yes	1 per train	2 meters	Complete	1E	Yes	Yes	(d)	No
Plant vent airflow rate	Unit 1 3200 to 160,000 Sft^3/min Unit 2 2000 to 100,000 Sft^3/min	E2	Yes[o]	Yes[x]	1 per unit	(q)	Core load	Non-1E[p]		Yes	(y)	No
Condenser air ejector radiation	5 x 10 $10^5 \mu Ci/cm^3$	E3	No	No	1 per unit	Communication console	Complete	Non-1E	Yes	Yes	Conforms to Reg Guide 1.97, Rev 2	Yes
Area radiation monitors												
Control room monitor	10^{-2} to 10^3 mr/h	E3	No	No	1 per plant	Communication console	Complete	Non-1E diesel -backed	Yes	Yes	(e)	No
Fuel handling building monitor	10^{-1} to 10^4 mr/h	E3	No	No	1 per plant	Communication console	Complete	Non-1E diesel -backed	Yes	Yes	(e)	No
Sampling room monitor	10^{-1} to 10^4 mr/h	E3	No	No	1 per plant	Communication console	Complete	Non-1E diesel -backed	Yes	Yes	(e)	No

TABLE 7.5.2-1 (SHEET 11 OF 14)

Variable	Range/ Status	Type/ Category	Qualification Environmental	Qualification Seismic	Number of Instruments	Control Room Indication	Implementation Date	Power Supply	EOF Indication	TSC Indication	Conformance	ERDS Parameter[ae]
Meteorological parameters	NA	E3	No	No	13 per plant	[q]	Complete	Non-1E	Yes	Yes	Conforms to Reg Guide 1.97, Rev 2	Yes[af]
Containment sump radiation	NA	E3	No	No	NA	NA	Complete	NA	NA	NA	(i)	No
Containment atmospheric temperature											(f)	Yes
Containment sump water temperature	0-400°F	D2	Yes	Yes	1 per unit	1 meter	Core load	Non-1E	No	No	Conforms to Reg. Guide 1.97, Rev. 2	No
Heat removal by the containment fan heat removal system											(h)	No
Containment sump and containment atmospheric sampling											(i)	No
Boric acid charging flow											(j)	No
RCS extended range pressure											(k)	No
Accumulator tank level											(m)	No

TABLE 7.5.2-1 (SHEET 14 OF 14)

ab. Other position indication (via the system status monitoring panel and/or monitoring light boxes) is available if the pair of lights associated with the valve hand switch which is powered from the same source as the solenoid valve is lost due to intrusion of a harsh environment on the unsealed solenoid.

ac. The auxiliary feedwater turbine driven pump room pneumatic damper position is not available in the TSC and EOF. This damper receives an open signal on auxiliary feedwater turbine driven pump start and fails open in the event of loss of offsite power to provide ventilation via natural circulation. Damper position indication may be obtained from the control room.

ad. Indications of ESF environmental temperatures in the TSC and EOF are high alarms. High temperatures are of concern for equipment operability in these environments following an accident; therefore, alarms of low temperatures are not needed.

ae. Changes to these parameters may require NRC notification per 10 CFR 50, Appendix E, Section VI. Additional parameters transmitted, but not shown in the table, are NIS Source, Intermediate, and Power Range Detectors; RCS flows; liquid effluent radiation; CVCS letdown radiation; and Steam Generator Blowdown Radiation.

af. Meteorological parameters transmitted through ERDS are 10-meter wind speed, 10-meter wind direction, and 60- to 10-meter delta temperature.

ag. Due to post LOCA flooding of the reactor cavity/incore instrument tunnel, the extended range neutron flux monitors could possibly be submerged and thus become inoperable. These detectors are required from the time of event initiation, until a stabilized subcritical condition is established, return to critical is no longer credible, and manual sampling is established. This is consistent with Regulatory Guide 1.97, Revision 2 which indicates the function of the excore neutron flux detectors is "function detection; accomplishment of mitigation," and the function of boron concentration measurement is "verification"; and with NUREG-0737 (item II.B.3) which requires the capability to obtain and analyze boron samples within approximately 1 hour, i.e., well before the excore neutron detectors may become inoperable.

ah. Procured for mild environment.

ai. Only one channel of positive indication is provided per valve, but the NRC determined that with this one exception, containment isolation valve position indication meets all other category 1 criteria. See NUREG-1137.

aj. Per NRC letter from C. E. Carpenter, Jr. to C. K. McCoy dated November 19, 1993, the accumulator pressure variable is Category 3 not Category 2.

ak. Several containment isolation valves are operated by both the A-Train and the B-Train. In this case, the control room indication for these valves is 2 pair of lights per valve.

TABLE 7.5.4-2

NUREG-0737 CONFORMANCE

Applicable Section of NUREG-0737	Variable
II.D.3	Pressurizer PORV status
II.F.1, Attachment 4	Containment pressure (extended range)
II.F.1, Attachment 5	Containment water level (NR and WR)
II.F.1, Attachment 6[2]	Containment H@ concentration
II.F.2	Core exit temperature
	Reactor vessel level RCS subcooling
I.D.2	Safety parameter display system
II.E.1.2	Auxiliary feedwater flow
II.F.1, Attachment 3[1]	Containment area radiation (high range)
II.F.1, Attachment 2	Sampling and analysis of plant effluent (See section 11.5.)
II.F.1, Attachment 1	Noble gas effluent monitors (See section 11.5.)
II.K.1.5	ECCS and other system valve status

1. Calibration of high-range monitors is performed in accordance with the manufacturer's recommendation.

2. Accurate indication of containment hydrogen concentration is available to the operators within 90 minutes of initiating safety injection following a LOCA.

..\vegpfsar\chap7\7-5-4.doc

7.6.4 ACCUMULATOR MOTOR-OPERATED VALVES

The design of the interconnection of these signals to the accumulator isolation valve meets the following criteria established in previous Nuclear Regulatory Commission (NRC) positions on this matter:

A. Automatic opening of the accumulator valves when:

1. The primary coolant system pressure exceeds a preselected value (specified in the Technical Specifications).

2. A safety injection (SI) signal has been initiated.

Both signals shall be provided to the valves.

B. Utilization of an SI signal to automatically remove (override) any bypass features that are provided to allow an isolation valve to be closed for short periods of time when the reactor coolant system (RCS) is at pressure (in accordance with the provisions of the Technical Specifications). As a result of the confirmatory SI signal, isolation of an accumulator with the reactor at pressure is acceptable.

The control circuit for these valves is shown in figure 7.6.4-1. The valves and control circuits are further discussed in subsections 6.3.2 and 6.3.5.

The SI system accumulator discharge isolation valves are motor-operated, normally open valves, which are controlled from the main control board. Technical Specifications require these valves to be open with power removed in mode 3 when RCS pressure is above 1000 psig.

These valves are also interlocked such that:

A. They open automatically on receipt of an SI signal with the main control board switch in either the "auto" or "close" position.

B. They open automatically whenever the RCS pressure is above the SI unblock pressure (P-11) specified in the Technical Specifications only when the main control board switch is in the "auto" position.

C. They cannot be closed as long as an SI signal is present.

The four main control board position switches for these valves provide a "spring return to auto" when placed in the open position and a "maintain position" when placed in the closed position.

The "maintain closed" position is required to provide an administratively controlled manual block of the automatic opening of the valve at pressure above the SI unblock pressure (P-11). The manual block or "maintain closed" position is required when performing periodic check valve leakage tests when the reactor is at pressure. The maximum permissible time that an accumulator valve can be closed when the reactor is at pressure is specified in the Technical Specifications.

Administrative control is required to ensure that any accumulator valve, which has been closed at pressures above the SI unblocking pressure, is returned to the "auto" position. Verification that the valve automatically returns to its normal full open position is also required.

During plant shutdown, the accumulator valves are closed. To prevent an inadvertent opening of these valves during that period, the accumulator valve motor circuit breakers are opened or withdrawn. Administrative control is again required to ensure that these valve circuit breakers are closed during the prestartup procedures.

Power lockout is provided for these valves as discussed in paragraph 8.3.1.1.11.

These normally open motor-operated valves have alarms, indicating a malpositioning (with regard to their emergency core cooling system function during the injection phase). The alarms sound in the main control room.

An alarm will sound for any accumulator isolation valve under the following conditions when the RCS pressure is above the SI unblocking pressure.

A. Valve motor-operated limit switch indicates valve not open.

B. Valve stem-operated limit switch indicates valve not open. The alarm on this switch will repeat itself at given intervals.

7.6.6.4.8 Diversity

The reactor coolant pumps' thermal barrier ACCW isolation valve closes automatically upon receiving either of the high-pressure or high-flow signals, providing actuation diversity. Functional diversity exists in the capability for manual actuation provided as a backup for the automatic mode.

7.6.6.4.9 Actuated Devices

The actuated device is the valve's 480-V motor starter.

7.6.6.4.10 Supporting Systems

The isolation function relies on the operability of the safety-related, 480-V ac power supply system, train B.

7.6.6.4.11 Analysis

Analysis is provided in paragraph 7.6.6.9.

7.6.6.4.12 Instrumentation

Annunciator windows are provided in the control room to alert the operator on a high flow or high pressure signal from the reactor coolant thermal barrier and auxiliary component cooling water interface system. Separate annunciator windows for high flow are provided to distinguish between which reactor coolant pump thermal barrier has failed. Isolation valve status is provided in the control room by indicating lights.

7.6.6.4.13 Periodic Testing

Provisions for the periodic go testing of the actuation system at full power are discussed in the Technical Requirements Manual.

7.6.6.5 Electric Steam Boiler Isolation

The electric steam boilers and all associated equipment located in the electric steam boiler building have been removed. All other equipment associated with the electric steam boiler that is located in areas other than the electric steam boiler building has been abandoned in place. The steam lines from the electric steam boiler going to the boric acid batching tank, which is the only safety-related interface with this system, have been cut and capped near the tank.

7.6.6.6 Steam Generator Blowdown Isolation

7.6.6.6.1 Description

As discussed in paragraph 10.4.8.1, the steam generator blowdown system (SGBS) is designed to maintain optimum secondary side water chemistry during normal operation and during anticipated operational occurrences of main condenser inleakage or primary to secondary leakage. Because portions of the SGBS are classifed as high energy lines, design features are provided to rapidly isolate the blowdown path should a rupture occur in the system piping outside of the containment.

The two isolation valves (in series) per blowdown line are located inside containment, powered from different safety trains and are automatically closed by the signals generated by separate instrumentation channels. The isolation valves (HV 15212A through D and 15216A through D) are air-operated, globe valves and fail closed upon loss of instrument air and/or control power. The capability for remote-manual isolation is provided in the control room as a backup for the automatic mode. Attempts to manually open either valve will not succeed, unless all actuating signals have cleared. The status of the isolation valves is displayed in the control room by the indicating lights.

7.6.6.6.2 Initiating Circuits

Each blowdown isolation valve in any given steam generator blowdown line will automatically close when a high-flow signal or any one of the high-temperature signals are received. The high temperature signals are generated by sensors located in four different safety-related equipment rooms within the auxiliary building. There are four temperature sensors and one flow transmitter associated with each valve. The automatic actuation signals are trained, channelized, and derived from safety-related flow transmitters and resistance temperature detectors. The signals generated are indicative of a steam generator blowdown line break outside of containment. Each valve can be manually actuated from the control room by the handswitch mounted on the miscellaneous system/equipment panel.

7.6.6.6.3 Logic

The isolation logic is shown in drawings 1X5DN152-1 and 1X5DN152-2.

REV 9 5/00
REV 6 4/97
REV 5 9/95
REV 4 4/94

7.6.6.6.4 Bypass

Neither bypass indication nor manual override of the automatic actuation are provided for the steam generator blowdown isolation valves.

7.6.6.6.5 Interlocks

The interlocks are shown in drawings 1X5DN152-1 and 1X5DN152-2.

7.6.6.6.6 Sequencing

The solenoid valves controlling the pneumatic isolation valves are powered from a safety-related, 125-V-dc, battery-backed power supply and are not sequenced. (See section 8.3).

7.6.6.6.7 Redundancy

All insulation valves, logic, instrumentation, controls, and power supplies are fully redundant and arranged in two completely independent trains, A and B. Each train is capable of providing 100-percent isolation of the appropriate steam generator blowdown line. The signals actuating train A and B isolation valves are generated by the redundant sensors and processed by redundant circuitry in two independent channels (3 and 4, respectively) in the balance of plant process instrumentation.

7.6.6.6.8 Diversity

Isolation can be initiated on either high line flow or high temperature, providing actuation diversity function. Manual isolation capability is provided as a backup for the automatic mode, which provides functional diversity.

7.6.6.6.9 Actuated Devices

The actuated devices are two solenoid valves per steam generator blowdown line (HY-15212A through D and HY-15216A through D) controlling the air supply to the pneumatic actuators of the globe-type isolation valves (HV-15212A through D and HV-15216A through D, respectively).

7.6.6.6.10 Supporting Systems

The following systems support the steam generator blowdown line isolation equipment:

- Class 1E, 125-V dc power supply.
- Instrument air system.

Failure of either or both of those systems will cause immediate closure of the isolation valves and will not degrade the isolation function.

7.6.6.6.11 Analysis

Analysis is provided in paragraph 7.6.6.9.

7.6.6.6.12 Instrumentation

A common annunciator window is provided in the control room to alert the operator of high temperature in any of four equipment rooms. The specific room may be identified by means of redundant temperature indicators with a selector switch in the control room. Isolation valve status is provided in the control room by indicating lights.

7.6.6.6.13 Periodic Testing

Provisions for the periodic go testing of the actuation system at full power are discussed in the Technical Requirements Manual.

7.6.6.7 CVCS Letdown Line Isolation

7.6.6.7.1 Description

As described in paragraph 9.3.4.1.2.1, the CVCS letdown line functions to maintain a programmed water level in the RCS pressurizer, thus maintaining proper reactor coolant inventory. Because the CVCS letdown line is classified as high energy, design features are provided to rapidly isolate the letdown path should a rupture occur in the system piping outside of the containment.

The two isolation valves (in series) are located inside containment, powered from different safety trains and are automatically closed by the signals generated by separate instrumentation channels. The isolation valves (HV-15214 and HV-8160) are air-operated globe valves and fail closed upon loss of instrument air and/or control power. The capability for remote-manual isolation is provided in the control room as a

backup for the automatic mode. Attempts to manually open either valve will not succeed, unless all actuating signals have cleared. The status of the isolation valves is displayed in the control room by the indicating lights.

7.6.6.7.2 Initiating Circuits

Each isolation valve in the CVCS letdown will automatically close when any one of the high temperature signals is received. Isolation valve HV-8160 will also automatically close upon receipt of a containment isolation signal (see FSAR Section 6.2.4). The high temperature signals are generated by sensors located in three different safety-related equipment rooms within the auxiliary building. There are three temperature sensors associated with each valve. The automatic actuation signals are trained, channelized, and derived from safety-related resistance temperature detectors. The signals generated are indicative of a CVCS letdown line break outside of containment. Each valve can be manually actuated from the control room by the handswitch mounted on the main control board.

7.6.6.7.3 Logic

The isolation logic is shown in drawings 1X5DN151-1 and 1X5DN151-2.

7.6.6.7.4 Bypass

Neither bypass indication nor manual override of the automatic actuation are provided for the CVCS letdown line isolation valves.

7.6.6.7.5 Interlocks

The interlocks are shown in drawings 1X5DN151-1 and 1X5DN151-2.

7.6.6.7.6 Sequencing

The solenoid valves controlling the pneumatic isolation valves are powered from a safety-related, 125-V dc, battery-backed power supply and are not sequenced. (See section 8.3.)

7.6.6.7.7 Redundancy

All isolation valves, logic, instrumentation, controls, and power supplies are fully redundant and arranged in two completely independent trains, A and B. Each train is capable of providing

100-percent isolation of the CVCS letdown line. The signals actuating train A and B isolation valves are generated by the redundant sensors and processed by redundant circuitry in two independent channels (3 and 4, respectively) in the balance of plant process instrumentation.

7.6.6.7.8 Diversity

Isolation is initiated on high temperature for valve HV-15214 and either high temperature or an LI signal for HV-8160. Manual isolation capability is provided as a backup for the automatic mode, which provides functional diversity.

7.6.6.7.9 Actuated Devices

The actuated device is solenoid valve HY-15214 controlling the air supply to the pneumatic actuators of the globe-type isolation valve HV-15214 and solenoid valves HY-8160 and HY-15215 for valve HV-8160.

7.6.6.7.10 Supporting Systems

The following systems support the CVCS letdown isolation equipment:

- Class 1E, 125-V dc power supply.
- Instrument air system.

Failure of either or both of those systems will cause immediate closure of the isolation valves and will not degrade the isolation function.

7.6.6.7.11 Analysis

Analysis is provided in paragraph 7.6.6.9.

7.6.6.7.12 Instrumentation

A common annunciator window is provided in the control room to alert the operator of high temperature in any of three equipment rooms. The specific room may be identified by means of redundant temperature indicators with a selector switch in the control room. Isolation valve status is provided in the control room by indicating lights.

7.6.6.7.13 Periodic Testing

Provisions for the periodic go testing of the actuation system at full power are discussed in the Technical Requirements Manual.

7.6.6.8 Analysis

A. Conformance to Nuclear Regulatory Commission Regulatory Guides

1. Regulatory Guide 1.22

   Isolation controls and interlocks can be tested periodically.

2. Regulatory Guide 1.29

   Isolation equipment, circuitry, and instrumentation are designed to withstand the effects of an earthquake without loss of function.

   All related components are classified as Seismic Category 1, in accordance with the guide.

3. Regulatory Guide 1.62

   Isolation controls discussed previously provide manual actuation capability, in accordance with the applicable portions of the guide.

4. Regulatory Guide 1.75 and Institute of Electrical and Electronics Engineers (IEEE) Standard 384

   Those isolation circuits discussed above that are classified safety-related conform to the requirements of both the guide and the standard.

B. Conformance to IEEE Standard 279-1971

   Those isolation circuits and devices discussed above that are classified safety-related conform to the applicable portions of the standard.

C. Conformance to Other Criteria and Standards

   Conformance to other criteria and standards is indicated in table 7.1.1-1.

..\vegpfsar\chap7\7-6-6.doc

7.7 CONTROL SYSTEMS NOT REQUIRED FOR SAFETY

The general design objectives of the plant control systems are:

A. To establish and maintain power equilibrium between the primary and secondary system during steady-state unit operation.

B. To constrain operational transients so as to preclude unit trip and to reestablish steady-state unit operation.

C. To provide the reactor operator with monitoring instrumentation that indicates all required input and output control parameters of the systems and provides the operator with the capability of assuming manual control of the system.

7.7.1 DESCRIPTION OF CONTROL SYSTEMS NOT REQUIRED FOR SAFETY

The plant control systems described in this section perform the following functions:

A. Reactor Control System

1. Enables the nuclear plant to accept a step-load increase or decrease of 10 percent and a ramp increase or decrease of 5 percent/min within the load range of 15 to 100 percent, without reactor trip, steam dump, or pressurizer relief actuation, subject to possible xenon limitations.

2. Maintains reactor coolant average temperature (T_{avg}) within prescribed limits by creating the bank demand signals for moving groups of full-length rod cluster control assemblies during normal operation and operational transients. The T_{avg} control also supplies a signal to pressurizer water level control and steam dump control.

B. Rod Control System

1. Provides for reactor power modulation by manual or automatic control (automatic rod insertion only) of full-length control rod banks in a preselected sequence and for manual operation of individual banks.

REV 9 5/00
REV 4 4/94
REV 3 12/92

2. Includes systems for monitoring and indicating which:

   - Provide alarms to alert the operator if the required core reactivity shutdown margin is not available because of excessive control rod insertion.

   - Display control rod position.

   - Provide alarms to alert the operator in the event of control rod deviation exceeding a preset limit.

C. Plant Control System Interlocks

1. Prevent further withdrawal of the control banks when signal limits are approached that indicate the approach to a departure from nucleate boiling ratio limit or kW/ft limit.

2. Limit automatic turbine load increase to values for which the nuclear steam supply system has been designed.

D. Pressurizer Pressure Control

1. Maintains or restores the pressurizer pressure to the design pressure ±35 psi (which is within reactor trip and relief and safety valve actuation setpoint limits) following normal operational transients that induce pressure changes by control (manual or automatic) of heaters and spray in the pressurizer.

2. Provides steam relief by controlling the power relief valves.

E. Pressurizer Water Level Control

Establishes, maintains, and restores pressurizer water level within specified limits as a function of the average coolant temperature. Changes in level are caused by coolant density changes induced by loading, operational, and unloading transients. Level changes are produced by means of charging flow control (manual or automatic), as well as by manual selection of letdown orifices. Maintaining coolant level in the pressurizer within prescribed limits by actuating the charging and letdown system thus provides control of the reactor coolant water inventory.

F. Steam Generator Water Level Control

1. Establishes and maintains the steam generator water level within predetermined limits during normal operating transients.

2. Maintains the steam generator water level within predetermined limits and unit trip conditions. It regulates the feedwater flowrate such that under operational transients the water level for the reactor coolant system does not decrease below a minimum value. Steam generator water inventory control is manual or automatic through the use of feedwater regulating valves.

G. Steam Dump Control

1. Permits the nuclear plant to accept a sudden loss of load without incurring reactor trip. Steam is dumped to the condenser as necessary to accommodate excess power generation in the reactor during turbine load reduction transients.

2. Ensures that stored energy and residual heat are removed following a reactor trip to bring the plant to equilibrium no-load conditions without actuation of the steam generator safety valves.

3. Maintains the plant at no-load conditions to permit a manually controlled cooldown of the plant.

H. Incore Instrumentation

Provides information on the neutron flux distribution and on the core outlet temperatures at selected core locations.

7.7.1.1 Reactor Control System

The reactor control system enables the nuclear plant to follow load changes automatically, including the acceptance of step-load increases or decreases of 10 percent and ramp increases or decreases of 5 percent/min within the load range of 15 to 100 percent without reactor trip, steam dump, or pressure relief (subject to possible xenon limitations). The system is also capable of restoring coolant average temperature to within the programmed temperature dead band following a change in load. Automatic control rod insertion may be used for temperature control. However, rod withdrawal can only be performed manually because the automatic rod withdrawal capability of the rod control system has been disabled. Manual control rod operation may be performed at any time within the range of defined insertion limits.

The reactor control system controls the reactor coolant average temperature by regulating control rod bank position. The reactor coolant loop average temperatures are determined from hot leg and cold leg measurements in each reactor coolant loop. There is an average coolant temperature (T_{avg}) computed for each loop, where:

$$T_{avg} = \frac{T_{hot}+T_{cold}}{2}$$

The error between the programmed reference temperature (based on turbine impulse chamber pressure) and the highest of the T_{avg} measured temperatures (which is processed through a lead-lag compensation unit) from each of the reactor coolant loops constitutes the primary control signal as shown in general in figure 7.7.1-1 and in more detail on the functional diagrams shown in drawing 1X6AA02-233. The system is capable of automatically restoring coolant average temperature to the programmed value following a decrease in load. Manual rod control may be needed to restore the coolant average temperature to the programmed value following an increase in load. The programmed coolant temperature increases linearly with turbine load from zero power to the full power condition. The T_{avg} also supplies a signal to pressurizer level control and steam dump control and to rod insertion limit monitoring.

The temperature channels needed to derive the temperature input signals for the reactor control system are fed from protection channels via isolation amplifiers.

An additional control input signal is derived from the reactor power versus turbine load mismatch signal. This additional control input signal improves system performance by enhancing response and reducing transient peaks.

The core axial power distribution is controlled during load follow maneuvers by changing (a manual operator action) the boron concentration in the reactor coolant system. The control board $\Delta\phi$ displays (paragraph 7.7.1.3.1) indicate the need for an adjustment in the axial power distribution. Adding boron to the reactor coolant will reduce T_{avg} requiring the control rods to be withdrawn manually. This action will reduce power peaks in the bottom of the core. Removing boron from the reactor coolant will automatically move the rods further into the core to control power peaks in the top of the core.

7.7.1.2 Rod Control System

The rod control system receives rod speed and direction signals from the T_{avg} control system. Control rods may be inserted automatically; however, rod withdrawal can only be performed

manually because the automatic rod withdrawal capability of the rod control system has been disabled. The rod speed demand signal varies over the corresponding range of 3.75 to 45 in./min (6 to 72 steps/min), depending on the magnitude of the input signal. Manual control is provided to move a control bank in or out at a prescribed fixed speed.

When the turbine load reaches approximately 15 percent of rated load, the operator may select the automatic mode, and rod motion is then controlled by the reactor control systems. A permissive interlock C-5 (table 7.7.1-1) derived from measurements of turbine impulse chamber pressure prevents automatic control when the turbine load is below 15 percent. In the automatic mode, the rods are inserted in a predetermined programmed sequence by the automatic programming with the control interlocks. With the automatic rod withdrawl capability of the rod control system disabled, rods are withdrawn manually in a predetermined programmed sequence. (See table 7.7.1-1.)

The shutdown banks are always in the fully withdrawn position during normal operation and are moved to this position at a constant speed by manual control prior to criticality. A reactor trip signal causes them to fall by gravity into the core. There are five shutdown banks.

The control banks are the only rods that can be manipulated under automatic control. Each control bank is divided into two groups to obtain smaller incremental reactivity changes per step. All rod control cluster assemblies in a group are electrically paralleled to move simultaneously. There is individual position indication for each rod cluster control assembly.

Power to rod drive mechanisms is supplied by two motor generator sets operating from two separate 480-V, 3-phase buses. Each generator is the synchronous type and is driven by a 200-h induction motor. The ac power is distributed to the rod control power cabinets through the two series-connected reactor trip breakers.

The variable speed rod drive programmer affords the ability to insert small amounts of reactivity at low speed to accomplish fine control of reactor coolant average temperature about a small temperature dead band, as well as furnishing control at high speed. A summary of the rod cluster control assembly sequencing characteristics is given below:

A. Two groups within the same bank are stepped such that the relative position of the groups will not differ by more than one step.

B. The control banks are programmed such that withdrawal of the banks is sequenced in the following order: control bank A, control bank B, control bank C, and

control bank D. The programmed insertion sequence is the opposite of the withdrawal sequence; i.e., the last control bank withdrawn (D) is the first control bank inserted.

C. The control bank withdrawals are programmed such that when the first bank reaches a preset position, the second bank begins to move out simultaneously with the first bank. This preset position is determined by the maximum allowable overlap between banks (typically 100 to 115 steps). When the second bank reaches a preset position, the third bank begins to move out. The first bank will be fully withdrawn before the third bank starts to move. Therefore, it is possible for only two banks to be withdrawn at any one time. This withdrawal sequence continues until the unit reaches the desired power level. The control bank insertion sequence is the opposite.

D. Overlap between successive control banks is adjustable between 0 to 50 percent (0 and 115 steps), with an accuracy of ±1 step.

E. Rod speeds for either the shutdown banks or manual operation of the control banks are capable of being controlled between a minimum of 6 steps/min and a maximum of 72 (+0, -10) steps/min.

7.7.1.3 Plant Control Signals for Monitoring and Indicating

7.7.1.3.1 Monitoring Functions Provided by the Nuclear Instrumentation System

The power range channels are important because of their use in monitoring power distribution in the core within specified safe limits. They are used to measure power level, axial flux imbalance, and radial flux imbalance. Suitable alarms are derived from these signals as described below.

Basic power range signals are:

A. Total current from a power range detector (four signals from separate detectors); these detectors are vertical and have a total active length of 10 ft.

B. Current from the upper half of each power range detector (four signals).

Any unexpected change in the position of the control bank under automatic control (insertion only), or a change in coolant temperature under manual control, provides a direct and immediate indication of a change in the reactivity status of the reactor. In addition, samples are taken periodically of coolant boron concentration. Variations in concentration during core life provide an additional check on the reactivity status of the reactor, including core depletion.

7.7.1.3.4 Rod Deviation Alarm

The position of any control rod is compared to the position of other rods in the bank.

The demanded and measured rod position signals are monitored by the plant computer, which drives an input to the main control board annunciator system whenever an individual rod position signal deviates from the other rods in the bank by a preset limit. The alarm can be set with appropriate allowance for instrument error and within sufficiently narrow limits to preclude exceeding core design hot channel factors.

Figure 7.7.1-3 is a block diagram of the rod deviation comparator and alarm system implemented by the plant computer.

7.7.1.3.5 Rod Bottom Alarm

A rod bottom signal for the control and shutdown rods in the digital rod position indication system is used to operate a control relay which generates the "rod bottom rod drop" alarm.

7.7.1.4 Plant Control System Interlocks

The listing of the plant control system interlocks and the description of their derivations and functions are presented in table 7.7.1-1. The designation numbers for these interlocks are preceded by "C." The development of these logic functions is shown in the functional diagrams. (See drawings 1X6AA02-233, 1X6AA02-234, 1X6AA02-235, 1X6AA02-236, 1X6AA02-237, 1X6AA02-238, 1X6AA02-239, and 1X6AA02-240.)

7.7.1.4.1 Rod Stops

Rod stops are provided to prevent abnormal power conditions which could result from excessive control rod withdrawal initiated by either a control system malfunction or operator violation of administrative procedures.

Rod stops are the C-1 through C-5 control interlocks identified in table 7.7.1-1. The C-3 rod stop derived from overtemperature ΔT and the C-4 rod stop derived from overpower ΔT are also used for turbine runback, which is discussed below.

7.7.1.4.2 Automatic Turbine Load Runback

Automatic turbine load runback is initiated by an approach to an overpower or overtemperature condition. This will prevent high power operation that might lead to an undesirable condition which, if reached, will be protected by reactor trip.

Turbine load reference reduction is initiated by either an overtemperature or overpower ΔT signal. Two-out-of-four coincidence logic is used.

A rod stop and turbine runback are initiated for both the overtemperature and the overpower condition when:

$$\Delta T > \Delta T_{rod\ stop}$$

for either condition in general:

$$\Delta T_{rod\ stop} = \Delta T_{setpoint} - B_p$$

where:

$\Delta T_{setpoint}$ = overtemperature and overpower ΔT reactor trip value.

B_p = a setpoint bias.

The turbine runback is continued until ΔT is equal to or less than $\Delta T_{rod\ stop}$.

This function serves to maintain an essentially constant margin to trip.

7.7.1.4.3 Turbine Loading Stop

An interlock (C-16) is provided to limit turbine loading during a rapid return to power transient when a reduction in reactor coolant temperature is used to increase reactor power (through the negative moderator coefficient). This interlock limits the reduction in coolant temperature so that it does not reach cooldown accident limits and preserves satisfactory steam generator operating conditions. Subsequent automatic turbine loading can begin after the interlock has been cleared by an

7.7.1.9.1 Thermocouples

Chromel-alumel thermocouples are threaded into guide tubes that penetrate the reactor vessel head through seal assemblies and terminate at the exit flow end of the fuel assemblies. The thermocouples are provided with two primary seals, a conoseal and swage-type seal from conduit to head. Thermocouple readings are monitored by the plant safety monitoring system.

7.7.1.9.2 Movable Neutron Flux Detector Drive System

Miniature fission chamber detectors can be remotely positioned in retractable guide thimbles to provide flux mapping of the core. The stainless steel detector shell is welded to the leading end of helical wrap drive cable and to stainless steel sheathed coaxial cable. The retractable thimbles, into which the miniature detectors are driven, are pushed into the reactor core through conduits which extend from the bottom of the reactor vessel down through the concrete shield area and then up to a thimble seal table. Their distribution over the core is nearly uniform, with about the same number of thimbles located in each quadrant.

The thimbles are closed at the leading ends, are dry inside, and serve as the pressure barrier between the reactor water pressure and the atmosphere. Mechanical seals between the retractable thimbles and the conduits are provided at the seal table. During reactor operation, the retractable thimbles are stationary. They are extracted downward from the core during refueling to avoid interference within the core. A space above the seal table is provided for the retraction operation.

The drive system for the insertion of the miniature detectors consists basically of drive assemblies, 5-path transfer assemblies, and 10-path transfer assemblies, as shown in figure 7.7.1-9. The drive system pushes hollow helical wrap drive cables into the core with the miniature detectors attached to the leading ends of the cables and small diameter sheathed coaxial cables threaded through the hollow centers back to the ends of the drive cables. Each drive assembly consists of a gear motor which pushes a helical wrap drive cable and a detector through a selective thimble path by means of a special drive box and includes a storage device that accommodates the total drive cable length. Each thimble location can be accessed by at least two detectors controlled from different drive units.

7.7.1.9.3 Control and Readout Description

The control and readout system provides means for inserting the miniature neutron detectors into the reactor core and withdrawing the detectors while plotting neutron flux versus detector position. The control system is located in the control room. Limit switches in each transfer device provide feedback of path selection operation. Each gearbox drives a resolver for position feedback. One five-path transfer selector is provided for each drive unit to insert the detector in one of five functional modes of operation. One 10-path transfer is also provided for each drive unit that is then used to route a detector into any one of up to 10 selectable paths. A common path is provided to permit cross-calibration of the detectors.

The control room contains the necessary equipment for control, position indication, and flux recording for each detector.

A flux mapping consists, briefly, of selecting flux thimbles in given fuel assemblies at various core quadrant locations. The detectors are driven to the top of the core and stopped automatically. An x-y plot (position versus flux level) is initiated with the slow withdrawal of the detectors through the core from top to a point below the bottom. In a similar manner other core locations are selected and plotted. Each detector provides axial flux distribution data along the center of a fuel assembly.

Various radial positions of detectors are then compared to obtain a flux map for a region of the core.

The number and location of these thimbles have been chosen to permit measurement of local to average peaking factors to an accuracy of ±5 percent (95-percent confidence). Measured nuclear peaking factors will be increased by 5 percent to allow for this accuracy. If the measured power peaking is larger than acceptable, reduced power capability will be indicated.

Operating plant experience has demonstrated the adequacy of the incore instrumentation in meeting the design bases stated.

7.7.1.10 Boron Concentration Measurement System

The boron concentration measurement system utilizes a sample measurement unit which contains a neutron source and neutron detector located in a shield tank. Piping within the shield tank is arranged to maintain coolant sample flow between the neutron source and the neutron detector. Neutron absorption by the boron in the coolant sample flow reduces the number of neutrons which contact the detector per unit time. Therefore, the time required to count a fixed number of neutron contacts is variable and dependent upon the concentration of boron solution.

The boron concentration measurement system is designed for use as an advisory system. It is not designed as a safeguards system or component of a safeguards system. The boron concentration measurement system is not part of a control element or control system nor is it designed for this use. No credit is taken for this system in any accident analysis. Therefore, redundancies of measurement components, self-checking subsystems, malfunction annunciations, and diagnostic circuitry are not included in this system. As a general operating aid it provides information as to when additional check analyses are warranted rather than as a basis for fundamental operating decisions.

7.7.1.11 ATWS Mitigation System Actuation Circuitry(AMSAC) Description

7.7.1.11.1 System Description

The ATWS (anticipated transient without scram) mitigation system actuation circuitry (AMSAC) provides a backup to the reactor trip system (RTS) and engineered safety features (ESF) actuation system (ESFAS) for initiating turbine trip and auxiliary feedwater flow in the event of an anticipated transient (e.g., in the event of complete loss of main feedwater). The AMSAC is independent of and diverse from the RTS and the ESFAS with the exception of the final actuation devices and is classified as non-Class 1E. It is a highly-reliable, microprocessor-based, single-train system powered by a non-Class 1E source. The AMSAC meets the applicable requirements of Part 50.62 of Title 10 of the Code of Federal Regulations and the quality assurance requirements of NRC Generic Letter 85-06. No other standards apply to the AMSAC.

The AMSAC continuously monitors main feedwater flow, which is an anticipatory indication of a loss of heat sink, and initiates certain functions when the flow drops below a predetermined setpoint in three of the four main feedwater lines for a delayed amount of time (dependent on turbine load). These initiated functions are the tripping of the turbine, the initiation of auxiliary feedwater, and isolation of the steam generator blowdown and sample lines.

The AMSAC is designed to be highly reliable, resistant to inadvertent actuation, and easily maintained. Reliability is assured through the use of internal redundancy and continual self-testing by the system. Inadvertent actuations are minimized through the use of internal redundancy and majority voting at the output stage of the system. The time delay on the low main feedwater flow and the coincidence logic used also minimize inadvertent actuations.

The AMSAC automatically performs its actuations when above a preselected power level, which is determined using turbine impulse chamber pressure, and remains armed sufficiently long after that pressure drops below the setpoint to ensure that its function will be performed in the event of a turbine trip.

7.7.1.11.2 Equipment Description

The AMSAC consists of a single train of equipment located in a seismically qualified cabinet.

The design of the AMSAC is based on the industry standard Intel multibus format, which permits the use of various readily available, widely used microprocessor cards on a common data bus for various functions.

The AMSAC consists of the following:

1. System Hardware

   The system hardware consists of two primary systems: the actuation logic system (ALS) and the test/maintenance system (T/MS).

   A. Actuation Logic System

      The ALS monitors the analog and digital inputs, performs the functional logic required, provides actuation outputs to trip the turbine and initiate auxiliary feedwater flow, and provides status information to the test/maintenance system. The ALS consists of three groups of input/output (I/O) modules, three actuation logic processors (ALPs), two majority voting modules, and two output relay panels. The I/O modules provide signal conditioning, isolation, and test features for interfacing the ALS and T/MS. Conditioned signals are sent to three identical ALPs for analog-to-digital conversion, setpoint comparison, and coincidence logic performance. Each of the ALPs perform identical logic calculations using the same inputs and derive component actuation demands, which are then sent to the majority voting modules. The majority voting modules perform a two-out-of-three vote on the ALP demand signals. These modules drive the relays providing outputs to the existing turbine trip and auxiliary feedwater initiation circuits. A simplified block diagram of the AMSAC ALS architecture is presented in figure 7.7.1-14.

   B. Test/Maintenance System

      The test/maintenance system provides the AMSAC with automated and manual testing as well as a maintenance mode. Automated testing is the continuously performed self-checking done by the

system during normal operation. ALS status is monitored by the T/MS and sent to the plant computer and the main control board. Manual testing of the system can be performed on-line to provide assurance that the ALS system is fully operational. The maintenance mode permits, under administrative control, modification of channel setpoints, channel status and timer values, and initiation of channel calibration.

The T/MS consists of a test/maintenance processor, a digital-to-analog conversion board, a memory board, expansion boards, a self-health board, digital output modules, a test/maintenance panel, and a portable terminal/printer.

2. Feedwater Flow Sensing

   The AMSAC utilizes the feedwater flow signal as measured with the four differential pressure-type flow transmitters, one for each of the main feedwater lines shown in drawing 1X6AA02-231.

3. Turbine Impulse Pressure

   The AMSAC also utilizes the turbine impulse pressure signal as measured with two pressure transmitters located in the steam supply line near the turbine shown in drawing 1X6AA02-240.

4. Equipment Actuation

   The output relay panels provide component actuation signals through isolation relays, which then drive the final actuation circuitry shown in drawings 1X6AA02-239 and 1X6AA02-240 for initiation of auxiliary feedwater and for turbine trip.

7.7.1.11.3 Functional Performance Requirements

Analyses have shown that the most limiting ATWS event is a loss of feedwater event without a reactor trip. AMSAC performs the mitigative actuations of automatically initiating auxiliary feedwater, tripping the turbine, and isolating the steam generator blowdown and sampling lines. These are initiated in order to ensure a secondary heat sink following an anticipated transient (ANS Condition II) without a reactor trip, in order to limit core damage following an anticipated transient without a reactor trip, and to ensure that the energy generated in the core is compatible with the design limits to protect the reactor coolant pressure boundary by maintaining the reactor coolant pressure to within ASME Stress Level C.

7.7.1.11.4 AMSAC Interlocks

A single interlock, designated as C-20, is provided to allow for the automatic arming and blocking of the AMSAC (see table 7.7.1-1). The system is blocked at sufficiently low reactor power levels when the actions taken by the AMSAC following an ATWS need not be automatically initiated. Turbine impulse chamber pressure in a two-out-of-two logic scheme is used for this permissive. Turbine impulse chamber pressure above the setpoint will automatically defeat any block, i.e., will arm the AMSAC. Dropping below this setpoint will automatically block the AMSAC. Removal of the C-20 permissive is automatically delayed for a predetermined time. The operating status of the AMSAC is displayed on the main control board.

7.7.1.11.5 Trip System

The feedwater flow and turbine impulse chamber pressure inputs are used by the AMSAC to determine trip demand. Signal conditioning is performed on the transmitter output and used by each of the ALPs to derive a component actuation demand. If three of the four feedwater lines have a low flow at a power level greater than the C-20 permissive, then a trip demand signal is generated. This signal drives output relays for performing the necessary mitigative actions.

7.7.1.11.6 Isolation Devices

AMSAC is independent of the reactor trip and engineered safety features actuation systems. The AMSAC feedwater flow inputs are non-Class 1E signals from the process control cabinets. No isolation into AMSAC is needed for these inputs. The AMSAC turbine impulse chamber pressure inputs are made downstream of Class 1E isolation devices, which are located within the process protection cabinets. These isolation devices ensure that the existing protection system continues to meet all applicable safety criteria by providing isolation. Buffering of the AMSAC outputs from the safety-related final actuation device circuits is achieved through qualified relays. A credible fault occurring in the nonsafety-related AMSAC will not propagate through and degrade the RTS and ESFAS.

7.7.1.11.7 AMSAC Diversity from the Reactor Protection Systems

Equipment diverse from the RTS and ESFAS is used in the AMSAC to prevent common mode failures that might affect the AMSAC and the RTS or ESFAS. The AMSAC is a digital, microprocessor-based system with the exception of the analog feedwater flow and turbine impulse pressure transmitter inputs, whereas the reactor trip system utilizes an analog-based protection system. Also where similar components are utilized for the same function in both AMSAC and the reactor trip system, the components used in AMSAC are provided from a different manufacturer.

Common mode failure of identical components in the analog portion of the RTS that results in the inability to generate a reactor trip signal will not impact the ability of the digital AMSAC to generate the necessary mitigative actuations. Similarly, a postulated common mode failure affecting analog components in ESFAS, affecting its ability to initiate auxiliary feedwater, will not impact the ability of the digital-based AMSAC to automatically initiate auxiliary feedwater.

7.7.1.11.8 Power Supply

The AMSAC power supply is a non-Class 1E vital bus, which is independent from the RTS power supplies, and is backed by batteries which are independent from the existing batteries which supply the RTS.

7.7.1.11.9 Environmental Variations

AMSAC equipment is not designed as safety-related equipment; therefore, it is not required to be qualified as safety-related equipment. The AMSAC equipment is located in a controlled environment such that variations in the ambient conditions are minimized. No AMSAC equipment is located inside containment. The transmitters (feedwater flow and turbine impulse chamber pressure) that supply the input into AMSAC are located outside containment and the turbine building, respectively, and are qualified for the environment in which they are located.

7.7.1.11.10 Setpoints

The AMSAC makes use of two setpoints in the coincidence logic in order to determine whether mitigative functions are required. Feedwater flow in each main feedwater line is sensed to determine a loss of secondary heat sink is imminent. The low-flow setpoint is selected in such a manner that a true lowering of the flow will be detected by the system. The normal small variations in feedwater flow will not result in a spurious AMSAC signal.

The C-20 permissive setpoint is selected in order to be consistent with ATWS investigations showing that the mitigative actions performed by the AMSAC need not be automatically actuated below a certain power level. The maximum allowable value of the C-20 permissive setpoint is defined by these investigations.

To avoid inadvertent AMSAC actuation on the loss of one main feedwater pump, a time delay unit is required on the low main feedwater flow channels to adjust the AMSAC actuation response time. The delay unit is designed such that the delay time is dependent on turbine power. This will ensure the reactor protection system will provide the first trip signals.

To ensure that the AMSAC remains armed sufficiently long to permit its function in the event of a turbine trip, the C-20 permissive is maintained for a preset time delay, after the turbine impulse chamber pressure drops below the setpoint.

The setpoints and the capability for their modification in the AMSAC are under administrative control.

REFERENCE

1. Lipchak, J. B., "Nuclear Instrumentation System," WCAP-8255, January 1974 (for additional background information only).

TABLE 7.7.1-1 (SHEET 1 OF 2)

PLANT CONTROL SYSTEM INTERLOCKS

Designation	Derivation	Function
C-1[a]	1/2 neutron flux (intermediate range) above setpoint	Blocks automatic and manual control rod withdrawal
C-2[a]	1/4 neutron flux (power range) above setpoint	Blocks automatic and manual control rod withdrawal
C-3[a]	2/4 overtemperature ΔT above setpoint	Blocks automatic and manual control rod withdrawal Actuates turbine runback via load reference Defeats remote load dispatching (if remote load dispatching is used)
C-4[a]	2/4 overpower ΔT above setpoint	Blocks automatic and manual control rod withdrawal Actuates turbine runback via load reference Defeats remote load dispatching (if remote load dispatching is used)
C-5[a]	1/1 turbine impulse chamber pressure below setpoint	Defeats remote load dispatching (if remote load dispatching is used) Blocks automatic control rod withdrawal

TABLE 7.7.1-1 (SHEET 2 OF 2)

Designation	Derivation	Function
C-7	1/1 time derivative (absolute value) of turbine impulse chamber pressure (decrease only) above setpoint	Makes steam dump valves available for either tripping or modulation
C-9	Any condenser pressure above setpoint or all circulation water pump breakers open	Blocks steam dump to condenser
C-11[a]	1/1 bank D control rod position above setpoint	Blocks automatic rod withdrawal
C-16	Reduce limit in coolant temperature above normal setpoint	Stops automatic turbine loading until condition clears
C-20[b]	Two-of-two turbine impulse chamber pressure above setpoint	Arms AMSAC; below setpoint blocks AMSAC (generated in AMSAC; see section 7.7)
P-4	Reactor trip	Blocks steam dump control via load T_{avg} controller
		Makes steam dump valves available for either tripping or modulation
	Absence of P-4	Blocks steam dump control via plant trip T_{avg} controller

a. The automatic withdrawal capability of the rod contol system has been disabled.

b. Not part of control system (non-Class 1E).

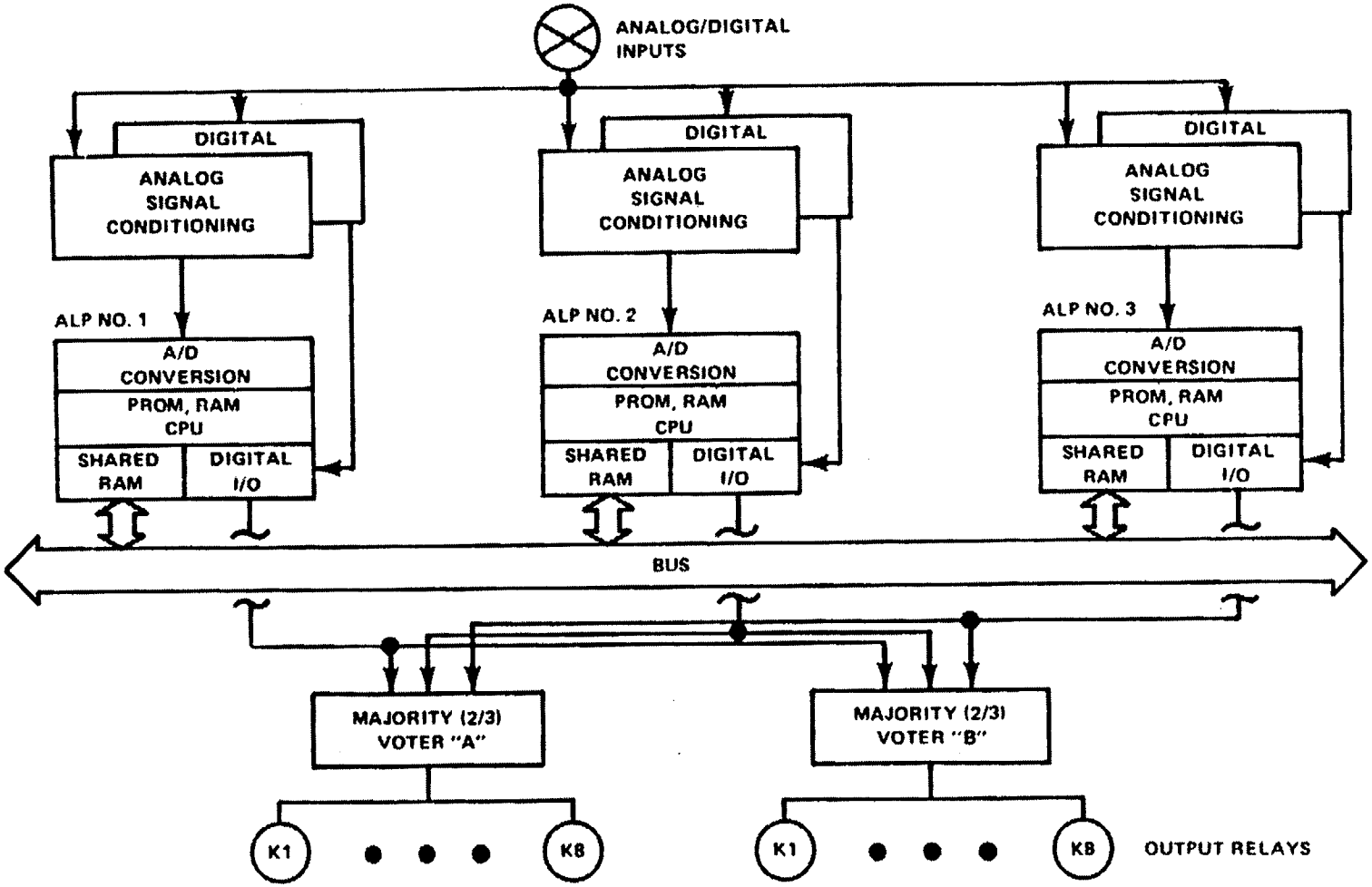

REV 9 5/00

VOGTLE
ELECTRIC GENERATING PLANT
UNIT 1 AND UNIT 2

ACTUATION LOGIC SYSTEM ARCHITECTURE

FIGURE 7.7.1-10

An important feature of the control rod system is that insertion is provided by gravity fall of the rods.

In all analyses involving reactor trip, the single highest worth rod cluster control assembly is postulated to remain untripped in its full out position.

One means of detecting a stuck control rod assembly is available from the actual rod position information displayed on the control board. The control board position readouts, one for each rod, give the plant operator the actual position of the rod in steps. The indications are grouped by banks (e.g., control bank A, control bank B, etc.) to indicate to the operator the deviation of one rod with respect to other rods in a bank. This serves as a means to identify rod deviation.

The plant computer monitors the actual position of all rods. Should a rod be misaligned from the other rods in that bank by more than 12 steps, the rod deviation alarm is actuated.

Misaligned RCCAs are also detected and alarmed in the control room via the flux tilt monitoring system, which is independent of the plant computer.

Isolated signals derived from the nuclear instrumentation system are compared with one another to determine whether a preset amount of deviation of average power level has occurred. Should such a deviation occur, the comparator output will operate a bistable unit to actuate a control board annunciator. This alarm will alert the operator to a power imbalance caused by a misaligned rod. By use of individual rod position readouts, the operator can determine the deviating control rod and take corrective action. The design of the plant control systems meets the requirements of General Design Criterion 23.

Refer to section 4.3 for additional information on response considerations resulting from reactivity.

7.7.2.3 Step-Load Changes Without Steam Dump

The plant control system is capable of restoring equilibrium conditions, without a trip, following a ±10-percent step change in load demand, over the 15- to 100-percent power range. Automatic control allows control rod insertion only. Control rod withdrawal can only be performed manually because the automatic rod withdrawal capability of the rod control system has been disabled. Steam dump is blocked for load decrease less than or equal to 10 percent. A load demand greater than full power is prohibited by the turbine control load limit devices.

The plant control system minimizes the reactor coolant average temperature deviation during the transient within a given value and restores average temperature to the programmed setpoint.

Excessive pressurizer pressure variations are prevented by using spray and heaters and power relief valves in the pressurizer.

The control system must limit nuclear power overshoot to acceptable values following a 10- to 100-percent increase in load.

7.7.2.4 Loading and Unloading

Ramp loading and unloading of 5 percent/min can be accepted over the 15- to 100-percent power range under manual control for loading and automatic control for unloading without tripping the plant. Control rod insertion may be performed automatically. However, control rod withdrawal can only be performed manually because the automatic rod withdrawal capability of the rod control system has been disabled. The function of the control system is to maintain the coolant average temperature as a function of turbine-generator load.

The coolant average temperature increases during loading and causes a continuous insurge to the pressurizer as a result of coolant expansion. The sprays limit the resulting pressure increase. Conversely, as the coolant average temperature is decreasing during unloading, there is a continuous outsurge from the pressurizer resulting from coolant contraction. The pressurizer heaters limit the resulting system pressure decrease. The pressurizer water level is programmed such that the water level is above the setpoint for heater cutout during the loading and unloading transients. The primary concern during loading is to limit the overshoot in nuclear power and to provide sufficient margin in the overtemperature ΔT setpoint.

The automatic load controls are designed to adjust the unit generation to match load requirements within the limits of the unit capability and licensed rating.

During rapid loading transients, a drop in reactor coolant temperature is sometimes used to increase core power. (Refer to paragraph 3.9.N.1.1.1.5.) This mode of operation is applied when the control rods are not inserted deep enough into the core to supply all the reactivity requirements of the rapid load increase. (The boron control system is relatively ineffective for rapid power changes.) The reduction in temperature is initiated by continued turbine loading past the point where the control rods are completely withdrawn from the core. The temperature drop is recovered and nominal conditions restored by a boron dilution operation.

Excessive drops in coolant temperature are prevented by interlock C-16. This interlock circuit monitors the auctioneered low coolant temperature indications and the programmed reference temperature, which is a function of turbine impulse pressure, and stops the turbine loading sequence when the decreased temperature reaches the setpoints.

7.7.2.5 Load Rejection Furnished by Steam Dump System

When a load rejection occurs and if the difference between the required temperature setpoint of the reactor coolant system and the actual average temperature exceeds a predetermined amount, a signal will actuate the steam dump to maintain the reactor coolant system temperature within control range until a new equilibrium condition is reached.

The reactor power is reduced at a rate consistent with the capability of the rod control system. Reduction of the reactor power is automatic. The steam dump flow reduction is as fast as RCCAs are capable of inserting negative reactivity.

The rod control system can then reduce the reactor temperature to a new equilibrium value without causing overtemperature and/or overpressure conditions. The steam dump steamflow capacity is 40 percent of full load steamflow at full load steam pressure.

The steam dump flow decreases proportionally as the control rods act to reduce the average coolant temperature. The artificial load is therefore removed as the coolant average temperature is restored to its programmed equilibrium value.

The dump valves are modulated by the reactor coolant average temperature signal. The required number of steam dump valves can be tripped quickly to stroke full open or modulate, depending upon the magnitude of the temperature error signal resulting from loss of load.

7.7.2.6 Turbine-Generator Trip with Reactor Trip

Whenever the turbine-generator unit trips at an operating power level above 50-percent power, the reactor also trips. The unit is operated with a programmed average temperature as a function of load, with the full load average temperature significantly

greater than the temperature corresponding to saturation pressure at the steam generator safety valve setpoint. The thermal capacity of the reactor coolant system is greater than that of the secondary system, and because the full load average temperature is greater than the no-load temperature, a heat sink is required to remove heat stored in the reactor coolant to prevent actuation of steam generator safety valves for a trip from full power. This heat sink is provided by the combination of controlled release of steam to the condenser and by makeup of feedwater to the steam generators.

The steam dump system is controlled from the reactor coolant average temperature signal, whose setpoint values are programmed as a function of turbine load. Actuation of the steam dump is rapid to prevent actuation of the steam generator safety valves. With the dump valves open, the average coolant temperature starts to reduce quickly to the no-load setpoint. A direct feedback of temperature acts to proportionally close the valves to minimize the total amount of steam which is bypassed.

The feedwater flow is cut off following a reactor trip when the average coolant temperature decreases below a given temperature or when the steam generator water level reaches a given high level.

Additional feedwater makeup is then controlled manually to restore and maintain steam generator water level, while ensuring that the reactor coolant temperature is at the desired value. Residual heat removal is maintained by the steam header pressure controller (manually selected) which controls the amount of steamflow to the condensers. This controller operates a portion of the same steam dump valves to the condensers which are used during the initial transient following turbine and reactor trip.

The pressurizer pressure and water level fall rapidly during the transient because of coolant contraction. The pressurizer water level is programmed so that the level following the turbine and reactor trip is above the heaters. However, if the heaters become uncovered following the trip, the chemical and volume control system will provide full charging flow to restore water level in the pressurizer. Heaters are then turned on to restore pressurizer pressure to normal.

The steam dump and feedwater control systems are designed to prevent the average coolant temperature from falling below the programmed no-load temperature following the trip to ensure adequate reactivity shutdown margin.