UNITED STATES
NUCLEAR REGULATORY COMMISSION
WASHINGTON, D.C. 20555-0001

May 15, 2000

MEMORANDUM TO: Stuart A. Richards, Director
Project Directorate IV & Decommissioning
Division of Licensing Project Management
Office of Nuclear Reactor Regulation

FROM: Stewart N. Bailey, Project Manager, Section 2
Project Directorate III
Division of Licensing Project Management
Office of Nuclear Reactor Regulation

SUBJECT: SUMMARY OF APRIL 18, 2000, MEETING WITH THE BABCOCK AND WILCOX OWNERS GROUP REGARDING THE REACTOR VESSEL INTERNALS PROGRAM

On April 18, 2000, the U. S. Nuclear Regulatory Commission (NRC) staff met with the Babcock and Wilcox Owners Group (B&WOG) to discuss the status and future plans related to their reactor vessel internals programs. The B&WOG is made up of five utilities, Duke Energy Corporation, Entergy Operations, Inc., Florida Power Corporation, AmerGen, FirstEnergy, and a vendor, Framatome Technologies Group. The B&WOG has seven active reactors at five sites. The purpose of the meeting was to discuss the status of the reactor vessel internals aging management program (RVI-AMP), and provide an update of the B&WOG baffle bolt safety assessment.

The B&WOG discussed the RVI-AMP and its relation to license renewal. They discussed the commitments that were made during Oconee's license renewal, and the schedule of other license renewal applications. They also discussed the different RVI-AMP item categories, the activities to address each category, and provided their estimated dates for completion. They noted that much of the research is being conducted through EPRI, and EPRI is still developing its schedule. Therefore, the estimated dates may change.

One category is baffle bolts. The B&WOG discussed the potential aging degradation mechanisms, the results of inspections, and their preliminary safety assessment. They also discussed the detailed structural analysis they will be performing in order to demonstrate that the baffle bolts meet the integrity requirements.

The staff thanked the B&WOG for their update, commenting that there was some good planning, but that the staff needed to see results before they could make any conclusions on the baffle bolts. The staff and the B&WOG tentatively scheduled a meeting in approximately one year to discuss the results of the analysis.

A list of those attending the meeting is provided as Attachment 1. The slides used by the B&WOG during the meeting are provided in Attachment 2.

Project No. 693

Attachments: 1. Meeting Attendees
2. B&WOG Slides

cc w/atts: See next page

DISTRIBUTION:
PUBLIC
PD IV-2 r/f
OGC (RidsOGCRp)
ACRS (RidsACRSACNWMailCenter)

E-Mail
JZwolinski (JAZ)
SBlack (SCB)
AMendiola (AJM)
EPeyton
SBailey (SNB)
KWichman
FGrubelich
BElliot
AHiser
RAnand
MMcNeil

OFFICE	PDIII-2/PM	PDIV-2/LA	PDIV-2/SC
NAME	SBailey:lc	EPeyton	SDembek
DATE	5/12/00	5/12/00	5/12/00

DOCUMENT NAME: G:\PDIV-2\B&Wog\BWOG_MTG0004018SUM.WPD
OFFICIAL RECORD COPY

cc:
Mr. Guy G. Campbell, Chairman
B&WOG Executive Committee
Vice President - Nuclear
FirstEnergy Nuclear Operating Company
Davis-Besse Nuclear Power Station
5501 North State Rt. 2
Oak Harbor, OH 43449

Ms. Sherry L. Bernhoft, Chairman
B&WOG Steering Committee
Florida Power Corporation
Crystal River Energy Complex
15760 West Power Line St.
Crystal River, FL 34428-6708

Mr. J. J. Kelly, Manager
B&W Owners Group Services
Framatome Technologies, Inc.
P.O. Box 10935
Lynchburg, VA 24506-0935

Mr. F. McPhatter, Manager
Framatome Cogema Fuels
3315 Old Forest Road
P.O. Box 10935
Lynchburg, VA 24506-0935

Mr. R. Schomaker, Manager
Framatome Cogema Fuels
3315 Old Forest Road
P.O. Box 10935
Lynchburg, VA 24506-0935

Mr. Michael Schoppman
Licensing Manager
Framatome Technologies, Inc.
1700 Rockville Pike, Suite 525
Rockville, MD 20852-1631

ATTENDEES LIST

MEETING WITH BABCOCK AND WILCOX OWNERS GROUP

REACTOR VESSEL INTERNALS PROGRAM

APRIL 18, 2000

NAME	AFFILIATION
Stewart Bailey	NRC/NRR/DLPM
Keith Wichman	NRC/NRR/DE/EMCB
F. Grubelich	NRC/NRR/DE/EMCB
Barry Elliot	NRC/NRR/DE/EMCB
Allan Hiser	NRC/NRR/DE/EMCB
Raj Anand	NRC/NRR/DE/RLSB
Michael McNeil	NRC/RES/DET
Stephen Fyfitch	FTI
Bill Gray	FTI
Frank Gregory	FTI
David Forsyth	Westinghouse/WOG
Charles Meyer	Westinghouse
Stephen Byrne	ABB CENP
Frank Garner	PNNL
Robert Gill	Duke Energy
Jeff Gilreath	Duke Energy
Mary Hazettini	Duke Energy
David Whitaker	Duke Energy
Dick Labott	PSE&G

U. S. NUCLEAR REGULATORY COMMISSION MEETING

B&WOG Reactor Vessel Internals Aging Management Program Status

April 18,2000
One White Flint North
Rockville, Maryland

The B&W Owners Group

ATTACHMENT 2

AGENDA

Time	Item	Presenter
1:00 PM	Purpose of Meeting and Introduction	D.E. Whitaker, Duke Energy Corporation
1:10 PM	Duke Energy License Renewal Commitments and B&WOG RVI-AMP	D.E. Whitaker, Duke Energy Corporation
1:40 PM	Status of B&WOG RVI-AMP	S. Fyfitch, Framatome Technologies, Inc.
2:15 PM	Status of Baffle Bolt Safety Assessment	F.M. Gregory, Framatome Technologies, Inc.
2:45 PM	Open Discussion/NRC Comments	All

PURPOSE OF MEETING AND INTRODUCTION

D. (David) E. Whitaker

Duke Energy Corporation

B&WOG Materials Committee Chairman

PURPOSE OF MEETING

- Provide the Status of the B&WOG Reactor Vessel Internals Aging Management Program (RVI-AMP)
- Provide an Update of the B&WOG Baffle Bolt Safety Assessment

INTRODUCTION

- License Renewal Activities
  - Duke Energy (ONS Units 1, 2, and 3)
    - SER issued February 2000
    - Expect renewed license before July 2000
  - Entergy Operations (ANO Unit 1)
    - License renewal application submitted January 2000
  - Florida Power (Crystal River Unit 3)
    - License renewal application to be submitted by December 2002

DUKE ENERGY CORPORATION

- As a Result of Staff Reviews, Commitments Were Made Which Include:
  - Timing of Inspections
  - Industry Participation
  - Updates to the NRC on Process to Develop Inspections
  - Revision to End-of-Life Deformation Limits (BAW-10008)

DUKE ENERGY CORPORATION

- Timing of Inspections
  - First inspection to occur early in the license renewal period
  - Second inspection in middle of the license renewal period
  - Third inspection in the latter third of the license renewal period (prior to the last year of the license renewal period)

DUKE ENERGY CORPORATION

- To Continue the Investigation of Applicable Aging Effects for Reactor Vessel Internals Items
  - Duke Energy will participate in industry programs
    - B&W Owners Group - RVI-AMP
    - Other industry programs, as appropriate (EPRI ITG, JoBB)
  - Apply results of industry studies and inspections to develop required inspection program

DUKE ENERGY CORPORATION

- Duke Energy Will Provide Periodic Updates Following Completion of Significant Milestones
  - Commencing within one year of the issuance of the renewed licenses
- Duke Energy Will Provide a Final Report Outlining the Inspection Program and the Continuing RVI-AMP
  - At least two years prior to the initial internals inspection

DUKE ENERGY CORPORATION

- Revision to BAW-10008
  - Appendix E to BAW-10008, Part 1, Rev.1, "Reactor Internals Stress & Deflection Due to LOCA & Max Hypothetical Earthquake," concludes "that at the end of 40 years, the internals will have adequate ductility to absorb local strain at the regions of maximum stress intensity intensity, and that irradiation will not adversely affect deformation limits."
  - Duke committed to perform the plant-specific analysis and develop data to demonstrate that the internals will meet the deformation limits at the expiration of the renewal license.

B&WOG RVI-AMP

- Focuses on Four Item Categories
  - Baffle bolts
  - Non-bolting austenitic stainless steel (Wrought and Weld Metal)
  - Cast Austenitic Stainless Steel (CASS) and Type 15-5 PH material
  - Other internals bolting

B&WOG RVI-AMP

- Focuses on Four Activities for Each of the Item Categories
  - Available literature data and research & development
  - Analyses and white papers
  - Critical location identification
  - Inspection planning (11 attributes)

B&WOG RVI-AMP

- Modifications of the Program Will Occur Over Time
  - As industry data and analysis are evaluated
  - Plant specific justification may be submitted for review if any inspection was determined not necessary
- Estimated Dates Provided in the Following B&WOG RVI-AMP Overview

Baffle Bolts		
Activity	Steps	Timing
R&D plus Literature Search	• Material Properties: 1. Irradiation Embrittlement (MRP) 2. IASCC (MRP) 3. Stress Relaxation (MRP) 4. Void Swelling (MRP & UTILITY) • Industry Inspection Results & Plant Data (MRP & B&WOG)	2004
Analysis & White Papers	• Develop General Guidelines for IE, IASCC, SR, and VS Susceptibility (MRP) • Determine Bolt Loads/Temperature/Fluence (B&WOG) • Determine Min. Number of Bolts & Location (B&WOG) • Prepare for Analysis of Inspection Results (B&WOG) • Evaluate Stress Relaxation (B&WOG) • Calculate Swelling vs. Time (B&WOG & UTILITY)	2005
Critical Locations	• Identify Susceptible Locations for IE, IASCC, SR and VS (B&WOG) • Determine if there are Lead Locations (B&WOG)	2005
Inspection Plan	• Finalize the Inspection Plan by Fully Developing the Following Eleven Attributes Given in a Typical B&W Plant License Renewal UFSAR Supplement: 1. Purpose 2. Scope 3. Aging Effect 4. Method (Inspection) 5. Sample Size 6. Industry Codes or Standards 7. Frequency 8. Acceptance Criteria or Standard 9. Corrective Action 10. Timing of New Program or Activity 11. Regulatory Basis	2010

Non-Bolting Austenitic Stainless Steel, Wrought and Weld Metal		
Activity	Steps	Timing
Research & Development	• Material Properties: 1. Irradiation Embrittlement (MRP) 2. IASCC (MRP) 3. Void Swelling (MRP & UTILITY) • Industry Inspection Results & Plant Data (MRP & B&WOG)	2004
Analysis	• Develop General Guidelines for IE, IASCC, and VS Susceptibility (MRP) • Determine Loads/Residual Stress (B&WOG) • Calculate Temperature/Fluence/Stress (B&WOG) • Determine Material Properties (B&WOG) • Calculate Critical Flaw Size and Revise EPRI TR-112718 (B&WOG & MRP) • Calculate Swelling vs. Time (B&WOG & UTILITY) • Revise BAW 10008	2005
Critical Locations	• Identify Susceptible Locations for IE, IASCC and VS (B&WOG) • Determine if there are Lead Locations (B&WOG)	2005
Inspection Plan	• Finalize the Inspection Plan by Fully Developing the following Eleven Attributes Given in a typical B&W Plant License Renewal UFSAR Supplement: 1. Purpose 2. Scope 3. Aging Effect 4. Method (Inspection) 5. Sample Size 6. Industry Codes or Standards 7. Frequency 8. Acceptance Criteria or Standard 9. Corrective Action 10. Timing of New Program or Activity 11. Regulatory Basis	2010

Cast Austenitic Stainless Steel (CASS) and 15-5 PH		
Activity	Steps	Timing
Research & Development	• Material Properties: 1. Irradiation Embrittlement (MRP) 2. Thermal Embrittlement (MRP) 3. Void Swelling (MRP & UTILITY) • Industry Inspection Results & Plant Data (MRP & B&WOG)	2004
Analysis	• Develop General Guidelines for IE, TE, and VS Susceptibility (MRP) • Determine Loads (B&WOG) • Determine Bounding Temperature/Fluence (B&WOG) • Determine Material Properties (B&WOG) • Calculate Critical Flaw Size (B&WOG) • Calculate Swelling vs. Time (B&WOG & UTILITY)	2005
Critical Locations	• Identify Susceptible Locations for IE, TE and VS (B&WOG) • Determine if there are Lead Locations (B&WOG)	2005
Inspection Plan	• Finalize the Inspection Plan by Fully Developing the following Eleven Attributes Given in a typical B&W Plant License Renewal UFSAR Supplement: 1. Purpose 2. Scope 3. Aging Effect 4. Method (Inspection) 5. Sample Size 6. Industry Codes or Standards 7. Frequency 8. Acceptance Criteria or Standard 9. Corrective Action 10. Timing of New Program or Activity 11. Regulatory Basis	2010

Other Internals Bolting		
Activity	Steps	Timing
R&D plus Literature Search	• Material Properties: 1. Irradiation Embrittlement (MRP) 2. IASCC (MRP) 3. Stress Relaxation (MRP) 4. Void Swelling (MRP & UTILITY) 5. Stress Corrosion Cracking (MRP, B&WOG) • Industry Inspection Results & Plant Data (MRP & B&WOG)	2004
Analysis & White Papers	• Develop General Guidelines for IE, IASCC, SR, VS, and SCC Susceptibility (MRP, BEOG) • Determine Bounding Temperature/Fluence (B&WOG) • Develop Document Discussing Which Bolts Need to be Inspected (B&WOG) • Evaluate Stress Relaxation (B&WOG) • Calculate Swelling vs. Time (B&WOG & UTILITY)	2005
Critical Locations	• Identify Susceptible Locations for IE, IASCC, SR, VS, and SCC (B&WOG) • Determine if there are Lead Locations (B&WOG)	2005
Inspection Plan	• Finalize the Inspection Plan by Fully Developing the following Eleven Attributes Given in a typical B&W Plant License Renewal UFSAR Supplement: 1. Purpose 2. Scope 3. Aging Effect 4. Method (Inspection) 5. Sample Size 6. Industry Codes or Standards 7. Frequency 8. Acceptance Criteria or Standard 9. Corrective Action 10. Timing of New Program or Activity 11. Regulatory Basis	2010

STATUS OF INDUSTRY AND B&WOG RVI-AMP

S. (Steve) Fyfitch

Framatome Technologies, Inc.

RV INTERNALS PROGRAMS BACKGROUND

- B&WOG Program Initiated (1996)
  - To evaluate baffle bolt cracking observed in French PWRs
  - To determine its relevance to the B&W-designed plants
- B&WOG Action Plan Prepared (1997)
  - Comprehensive program to manage RV internals aging effects
  - Reactor Vessel Internals-Aging Management Program (RVI-AMP) identified in BAW-2248A

RV INTERNALS PROGRAMS BACKGROUND

- Joint Owners Baffle Bolt (JoBB) Program Initiated by Industry (Through EPRI) to Participate in EdF Ongoing Research Activities (1997)
- Industry-wide PWR Materials Reliability Program (MRP) Developed (1998)
  - To serve as industry focal point for resolution of generic issues related to PWR materials degradation management
  - Created an Issue Task Group (ITG) to manage RV internals aging issues

RV INTERNALS PROGRAMS BACKGROUND

- Initial B&WOG Assessment of Potential RV Internals Emerging Issues and Details of the Preliminary Baffle Bolt Safety Assessment Presented to NRC (August 28, 1997)
- Details of the B&WOG RVI-AMP Presented to NRC during B&WOG Meeting (April 23, 1998)
- MRP and Industry RV Internals/JoBB ITG Presented to NRC by EPRI during WOG Meeting (March 25, 1999)
- B&WOG RVI-AMP Status Report Sent to NRC (May 10, 1999)

RV INTERNALS PROGRAMS BACKGROUND

- Status of B&WOG RVI-AMP Presented to NRC During Duke Energy/B&W Owners Group Meeting (July 19, 1999)
- BAW-2248A, "Demonstration of the Management of Aging Effects for the Reactor Vessel Internals," Issued with Staff SER Included (March 2000)
- Status of MRP RV Internals/JoBB ITG Presented to NRC During WOG Meeting (April 18, 2000)

B&WOG RVI-AMP SCHEDULE

Task	1996	1997	1998	1999	2000	2001	2002	2003	2004	2005	2006	2007	2008	2009	2010
Irradiation-Assisted Stress Corrosion Cracking Issues (B&WOG, MRP, and Utility)	1/96										12/05				
Prepare Safety Evaluation - Baffle/Former Bolts (B&WOG)		1/97	Draft 6/98		Prelim.		Final 6/01								
Stress Corrosion Cracking Issues (B&WOG, MRP, and Utility)				1/99							12/05				
Stress Relaxation Issues (MRP, B&WOG, and Utility)						1/01					12/05				
Irradiation Embrittlement Issues (MRP, B&WOG, and Utility)						1/01					12/05				
Void Swelling Issues (MRP, B&WOG, Utility)					10/99						12/05				
Thermal Embrittlement Issues (including Synergistic Effects of Irradiation) (MRP, B&WOG, and Utility)					1/00						12/05				
B&WOG Support of Industry Activities (B&WOG)	1/96														12/10
Inspection Planning															12/10

Note: Current plans are to finalize the inspection requirements by 2010, in preparation for an inspection in the 2013-2023 time-frame.

RV INTERNALS AGING CONCERNS

- Cracking due to Irradiation-Assisted Stress Corrosion (IASCC) and Stress Corrosion (SCC)
- Reduction of Fracture Toughness due to Irradiation Embrittlement (IE) and Thermal Embrittlement (TE)
- Dimensional changes due to Void Swelling (VS)
- Loss of Mechanical Closure Integrity due to Stress Relaxation (SR)

177 - FA Type 1, Baffle Bolts

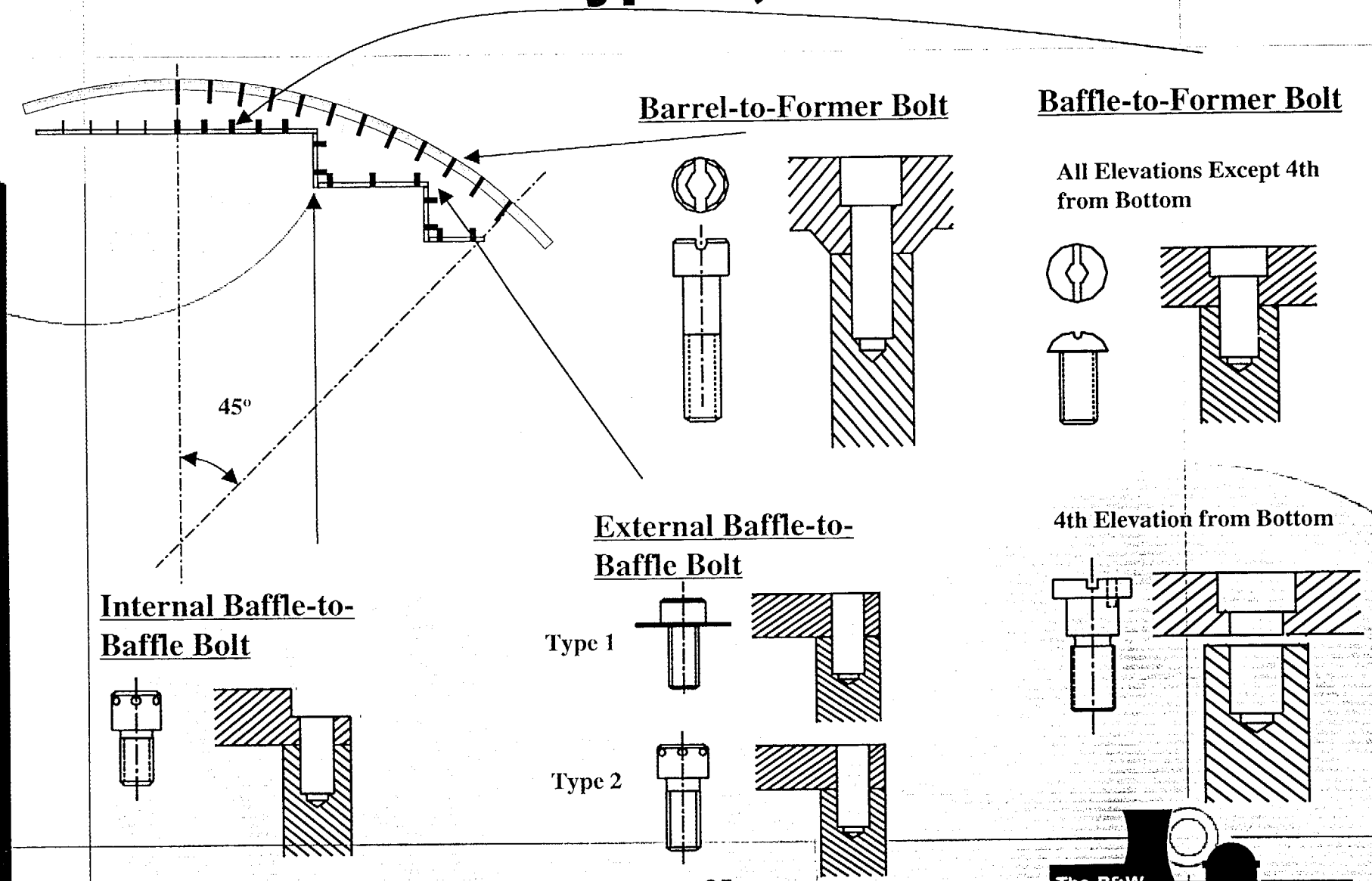

177 - FA Type 2, Baffle Bolts

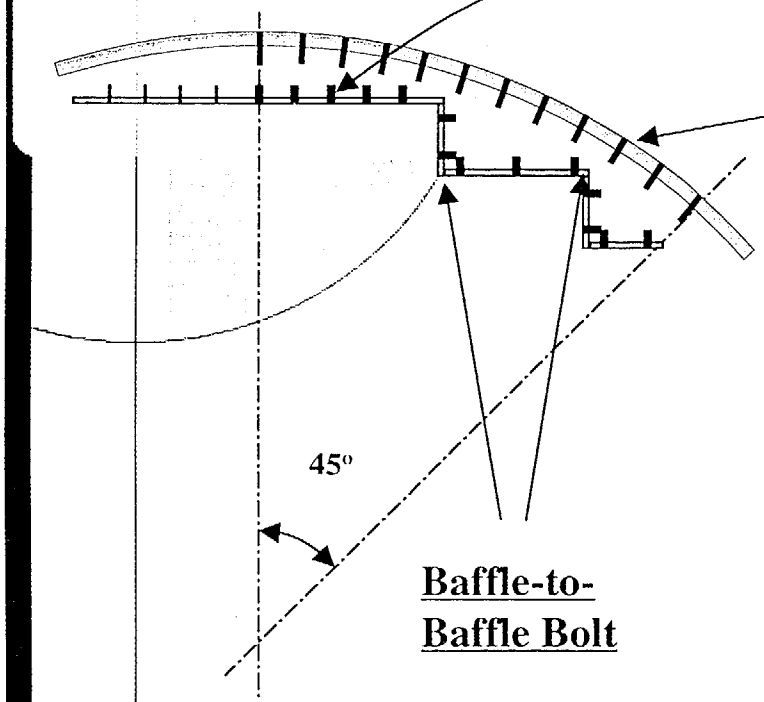

Barrel-to-Former Bolt

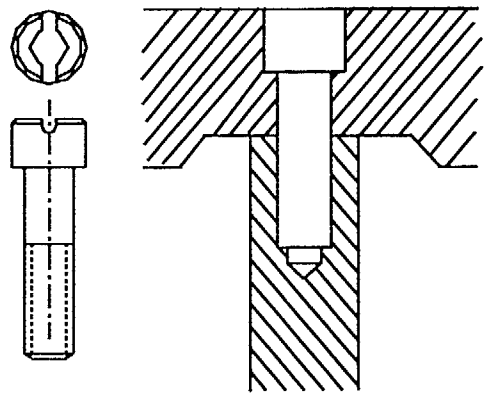

Baffle-to-Former Bolt

All Elevations Except 4th from Bottom

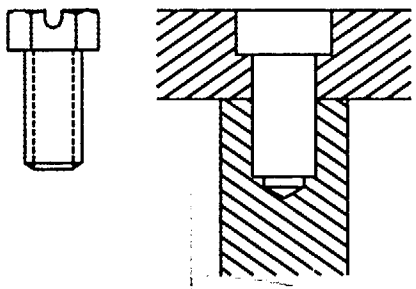

4th Elevation from Bottom

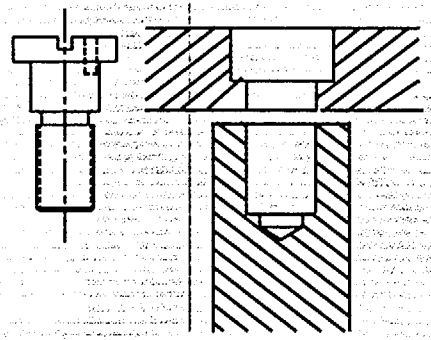

Baffle-to-Baffle Bolt

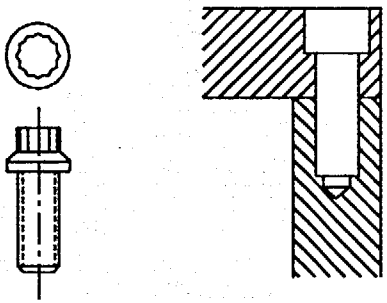

BAFFLE BOLTS

- Potential Aging Degradation Mechanisms
  - Irradiation-Assisted Stress Corrosion Cracking
  - Irradiation Embrittlement
  - Stress Relaxation
  - Void Swelling
- Results of U.S. Industry Inspections Show Minimal Degradation to Date (Farley-1, Farley-2, Point Beach-2, and Ginna)
- MRP/JoBB Program Activities to Provide Data for RVI-AMP

BAFFLE BOLTS

- B&WOG Safety Assessment
  - Preliminary assessment submitted to NRC in 1998
    - B&W plant design features expected to minimize impact of bolt degradation
    - Baffle bolt cracking not a safety concern
  - Ongoing stress analyses scheduled for completion in 2000
  - Final report scheduled for mid-2001
  - Results used to determine sample size and acceptance criteria for inspections, if necessary
- Current Plans are to Finalize the Baffle Bolt Inspection Attributes by 2010

Former and Baffle Plates

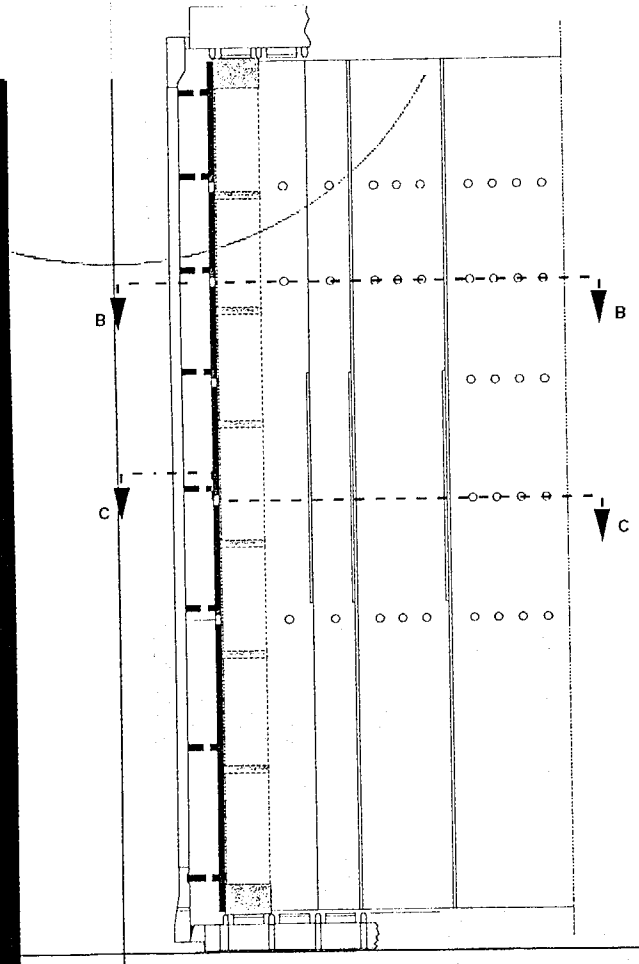

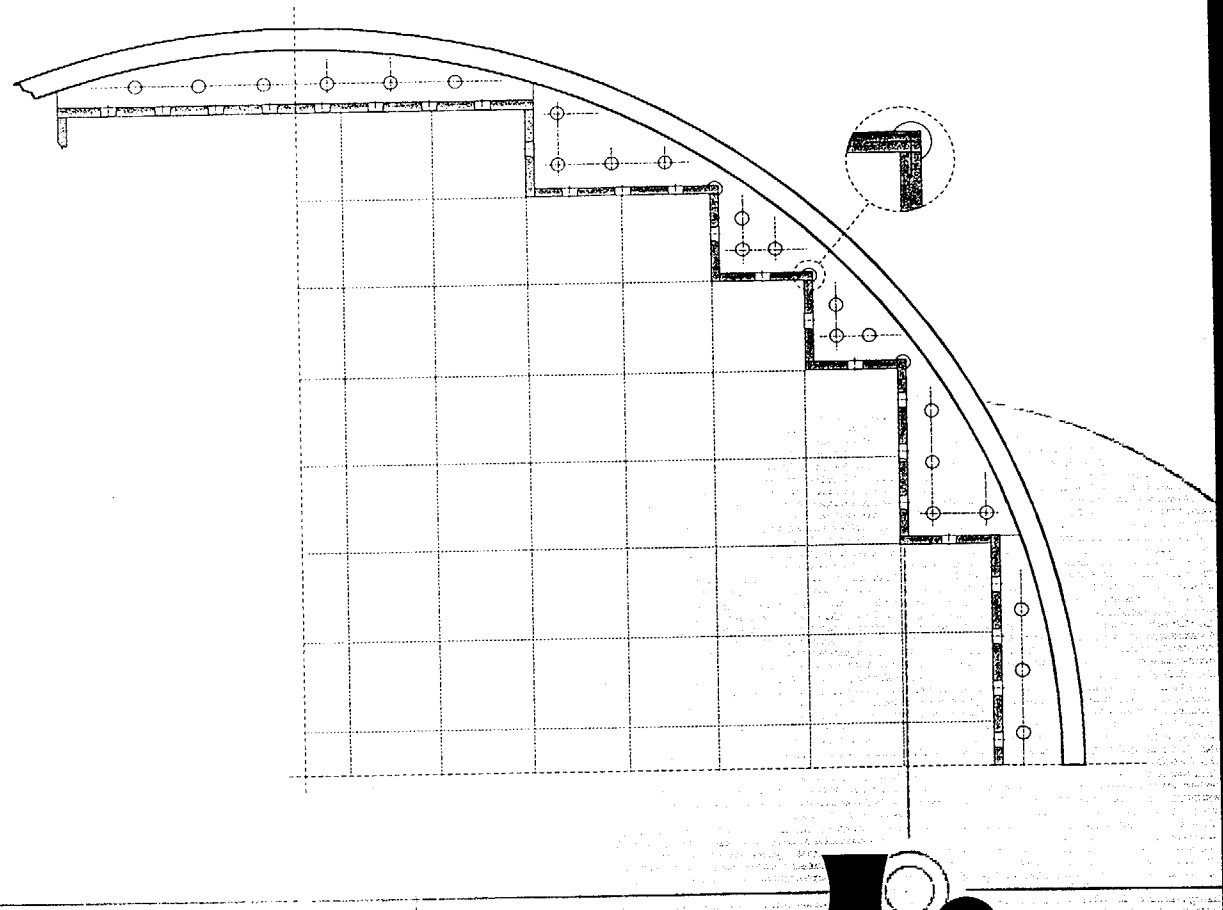

Core Support Assembly

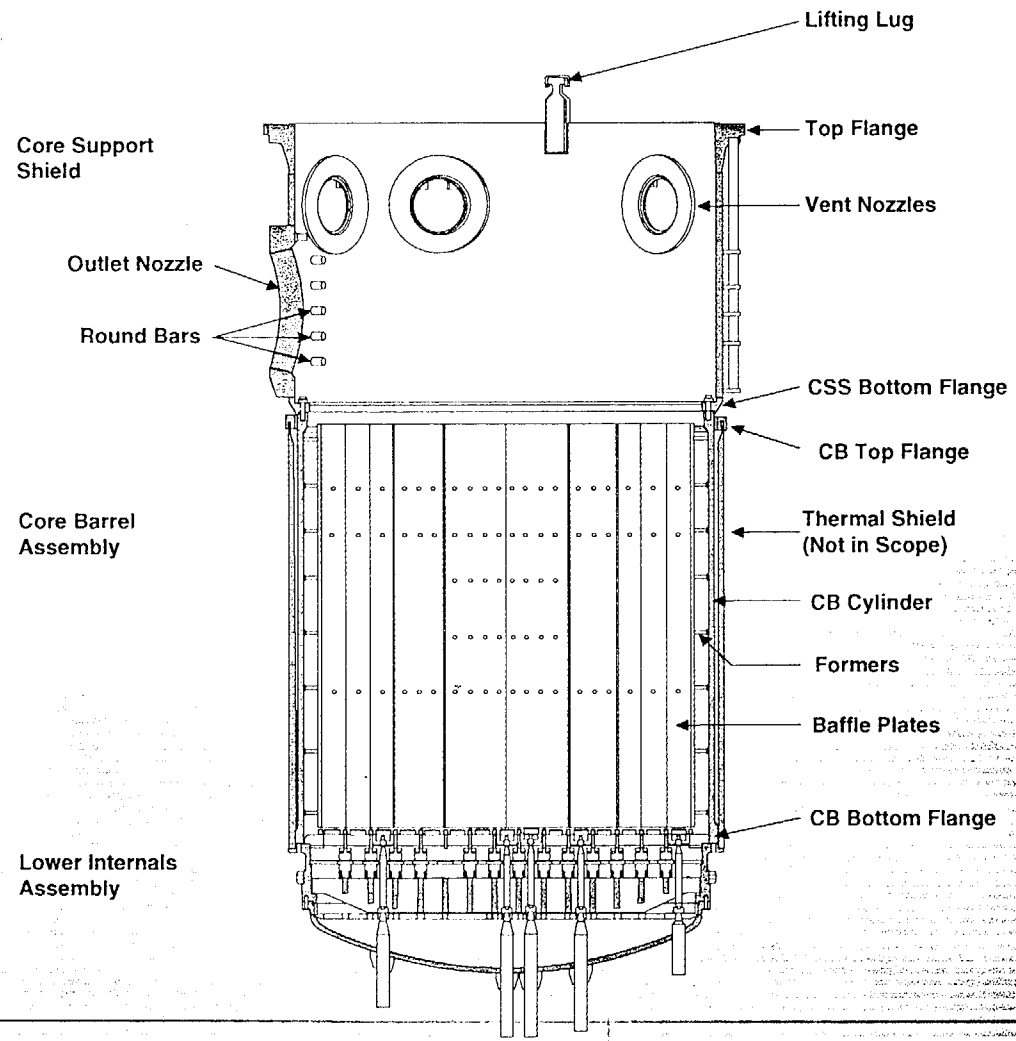

Upper Grid Assembly

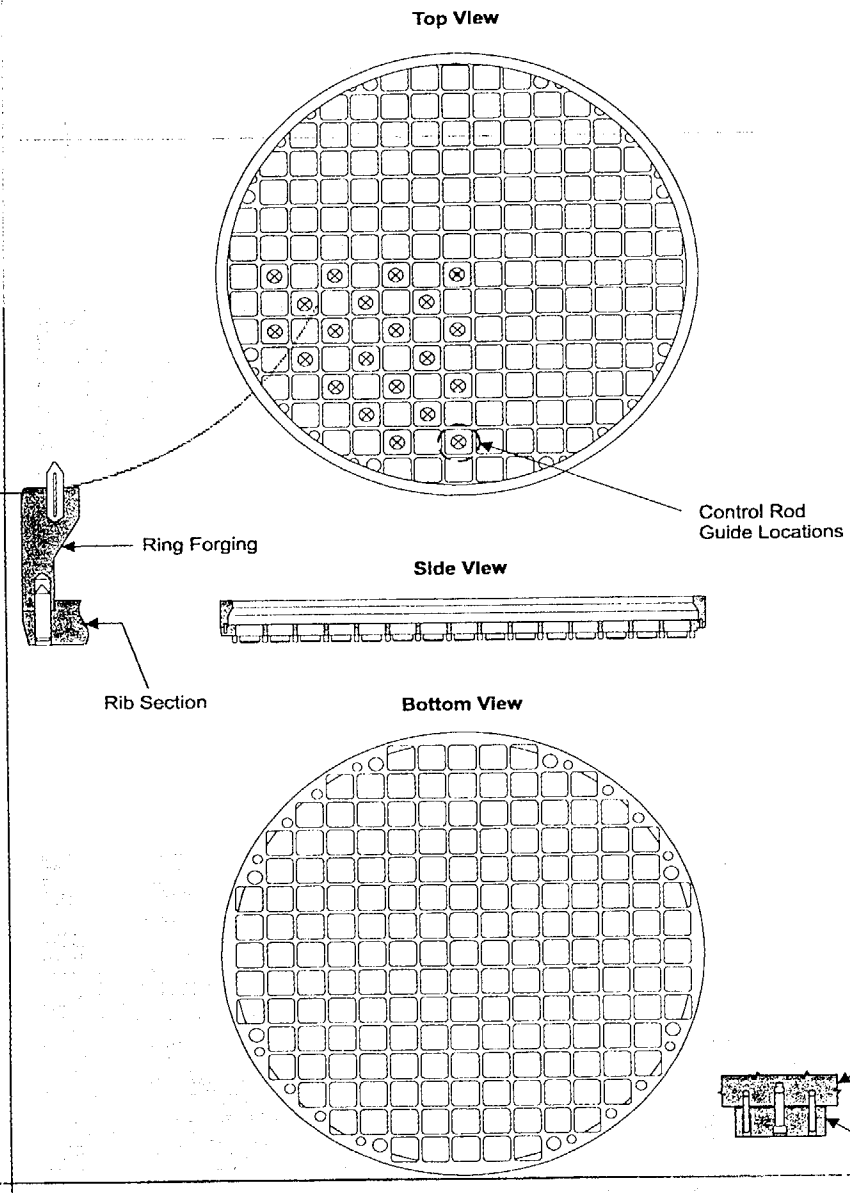

Lower Internals Assembly

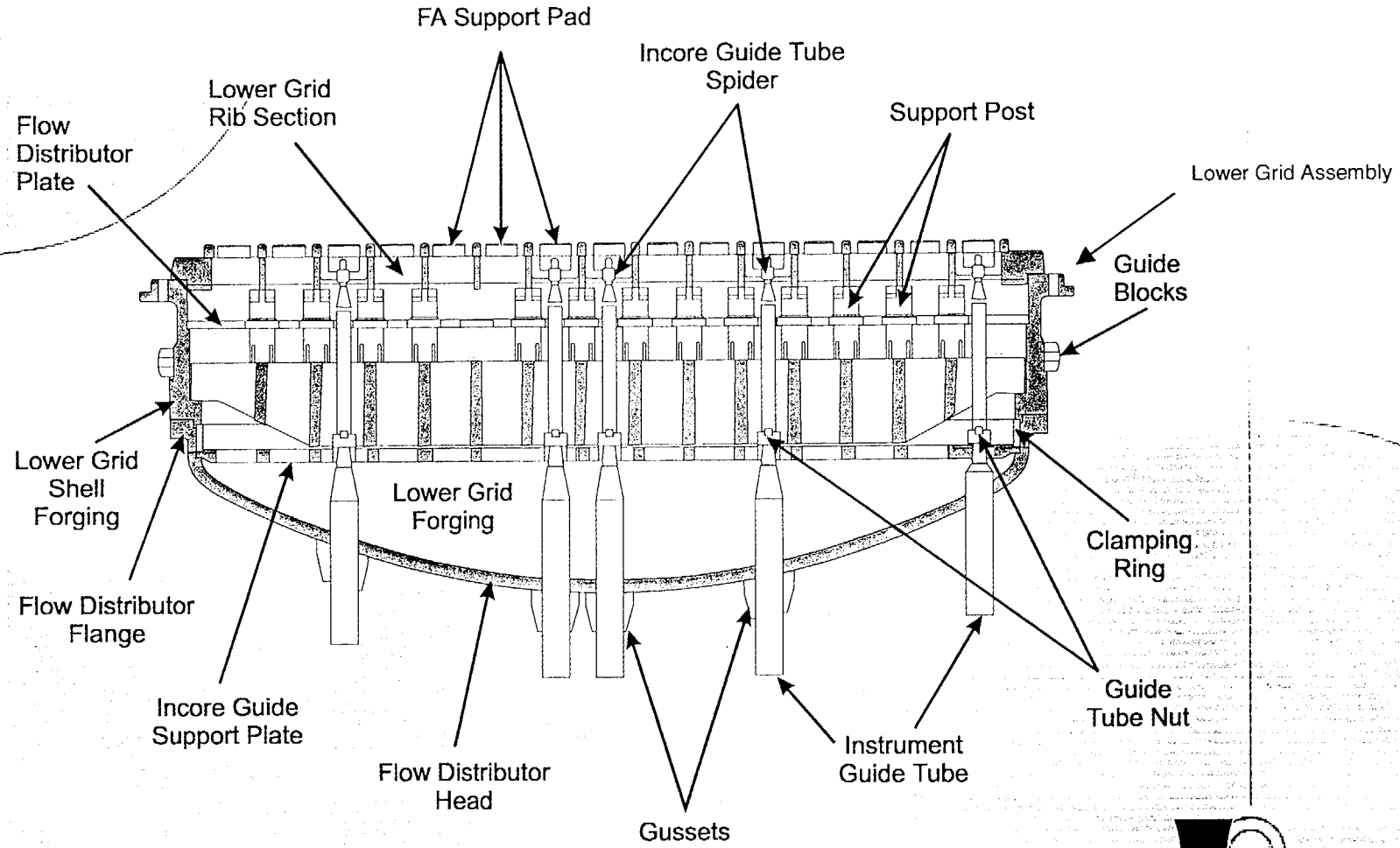

NON-BOLTING AUSTENITIC STAINLESS STEEL

- Potential Aging Degradation Mechanisms
  - Irradiation-Assisted Stress Corrosion Cracking
  - Irradiation Embrittlement
  - Void Swelling
- High Fluence Material Property Data Obtained From MRP/JoBB Program
- Assessment of Aging Effects Impact on RV Internals Intended Functions to be Completed by 2005
- Current Plans are to Finalize the Inspection Attributes by 2010

Vent Valve Assembly

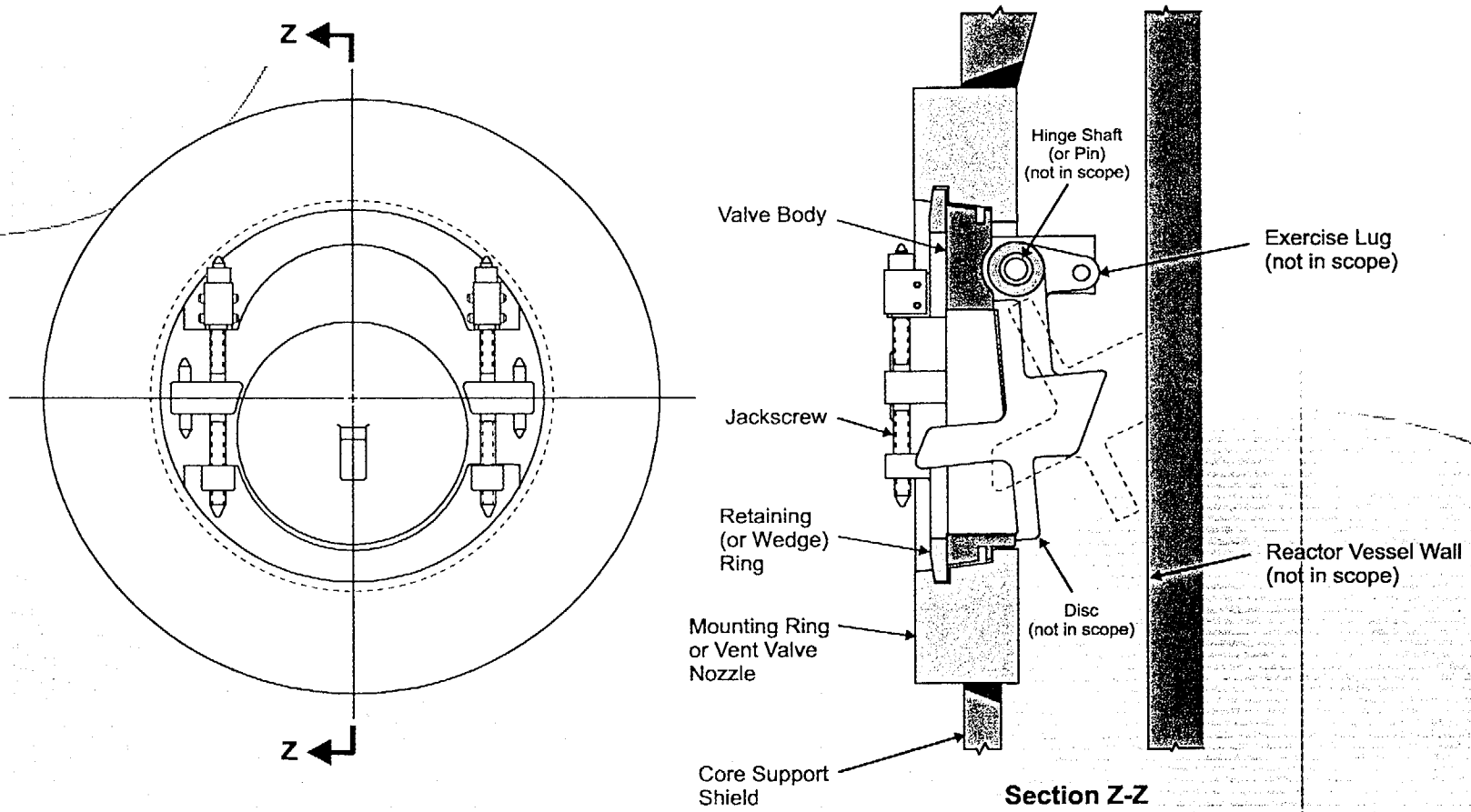

Core Support Assembly
(CASS Outlet Nozzle at ONS-3 Only)

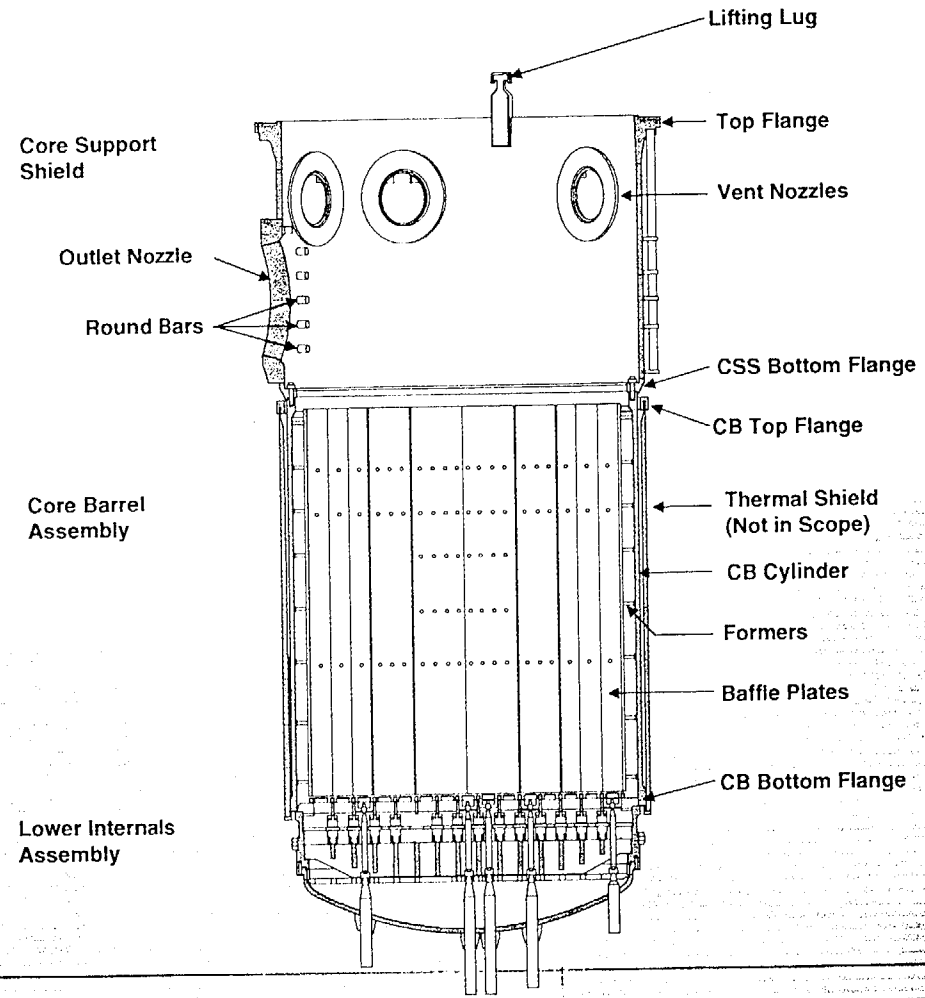

Rod Guide Brazement and Spacer

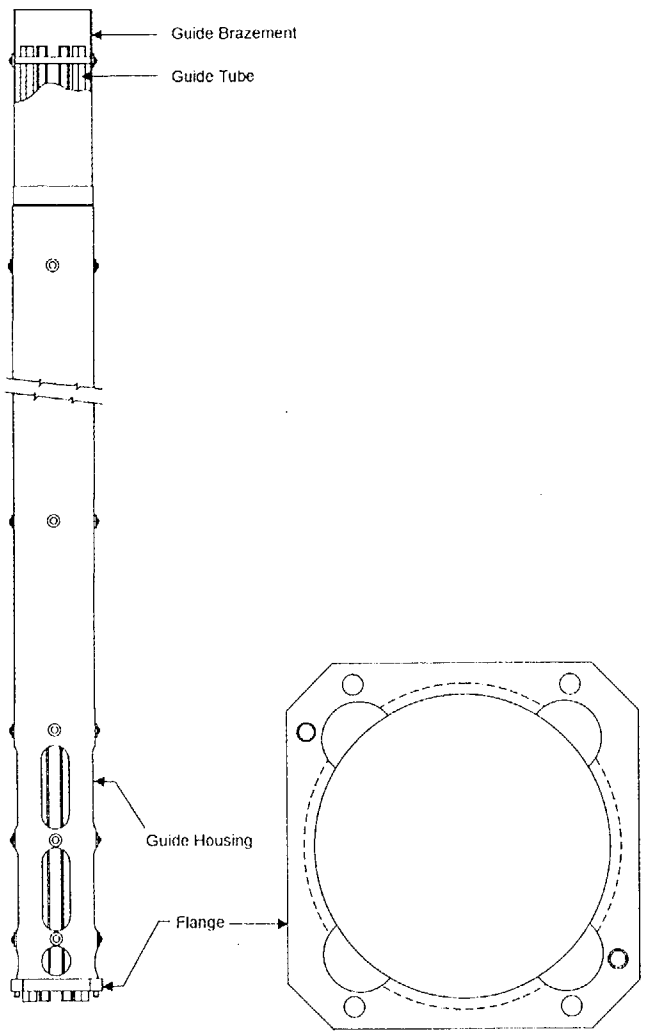

Rod Guide Brazement

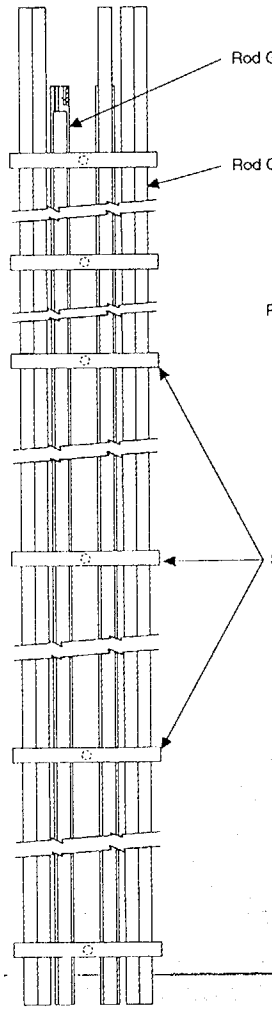

Rod Guide Spacer Castings

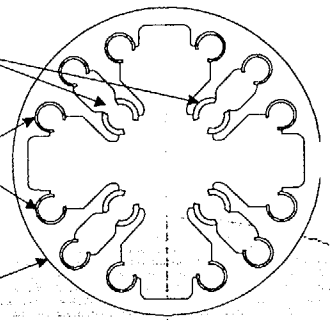

Lower Internals Assembly

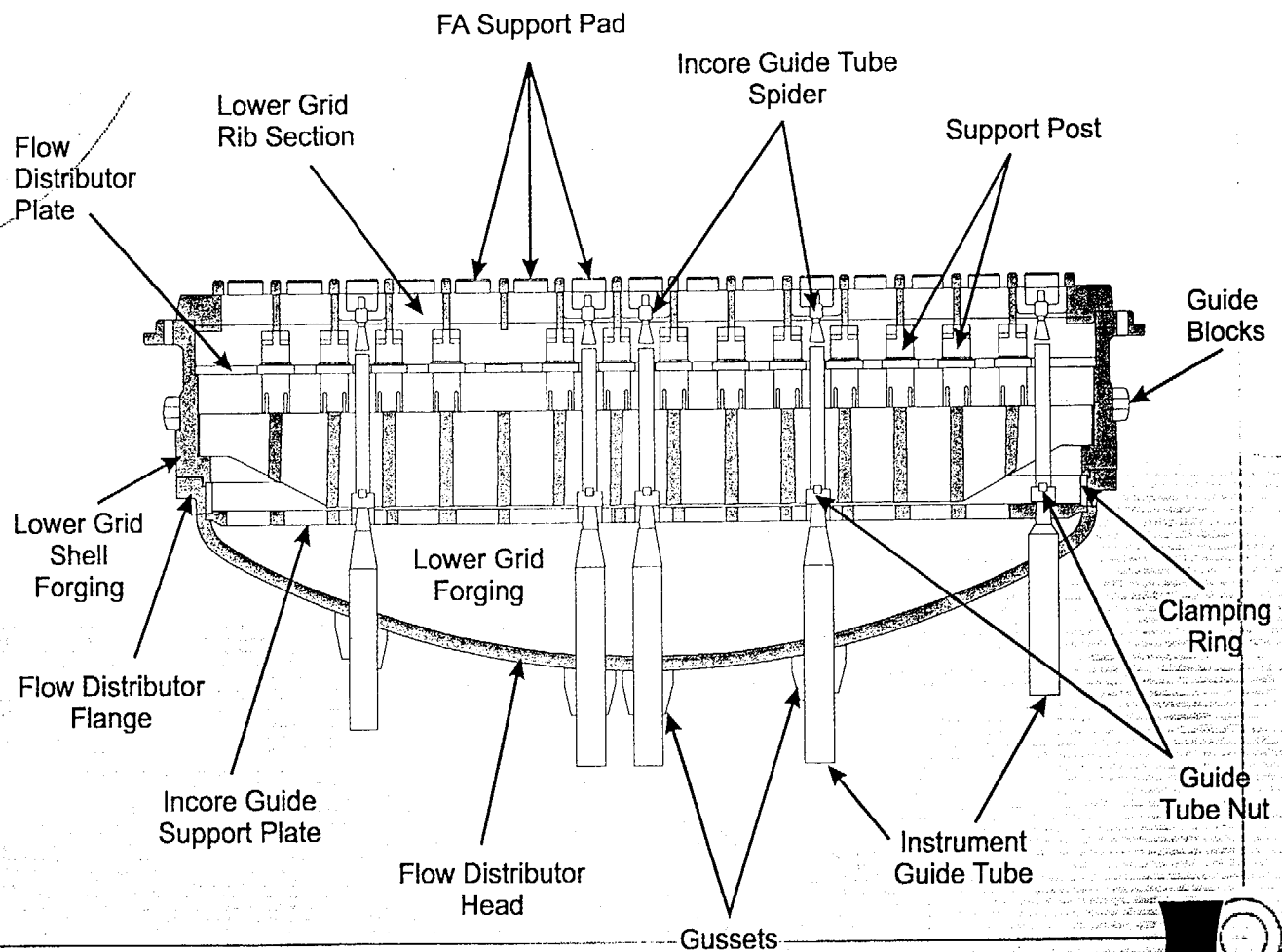

CASS AND TYPE 15-5 PH

- Potential Aging Degradation Mechanisms
  - Thermal Embrittlement (TE)
  - Irradiation Embrittlement (IE)
  - Synergistic Effects of TE and IE
- MRP Program Task to Obtain High Fluence Data
- Current Plans are to Finalize the Inspection Attributes by 2010

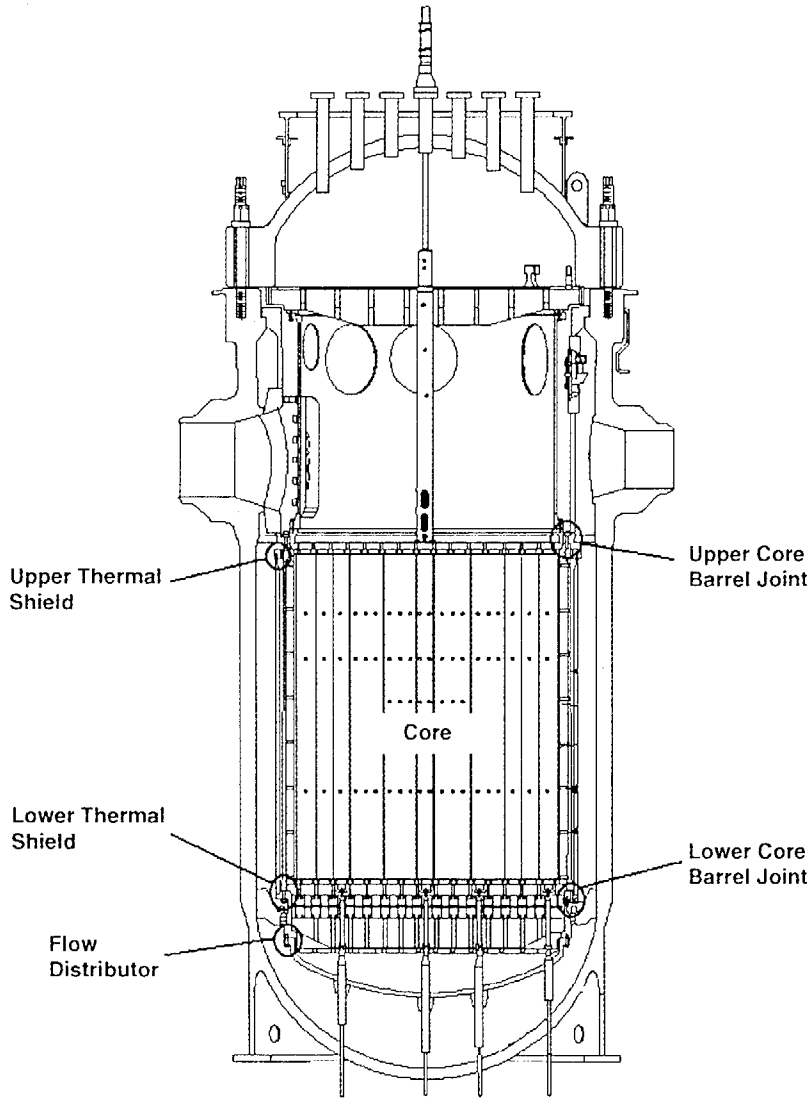

Core Barrel, Thermal Shield, and Flow Distributor Bolts

Vent Valve Assembly

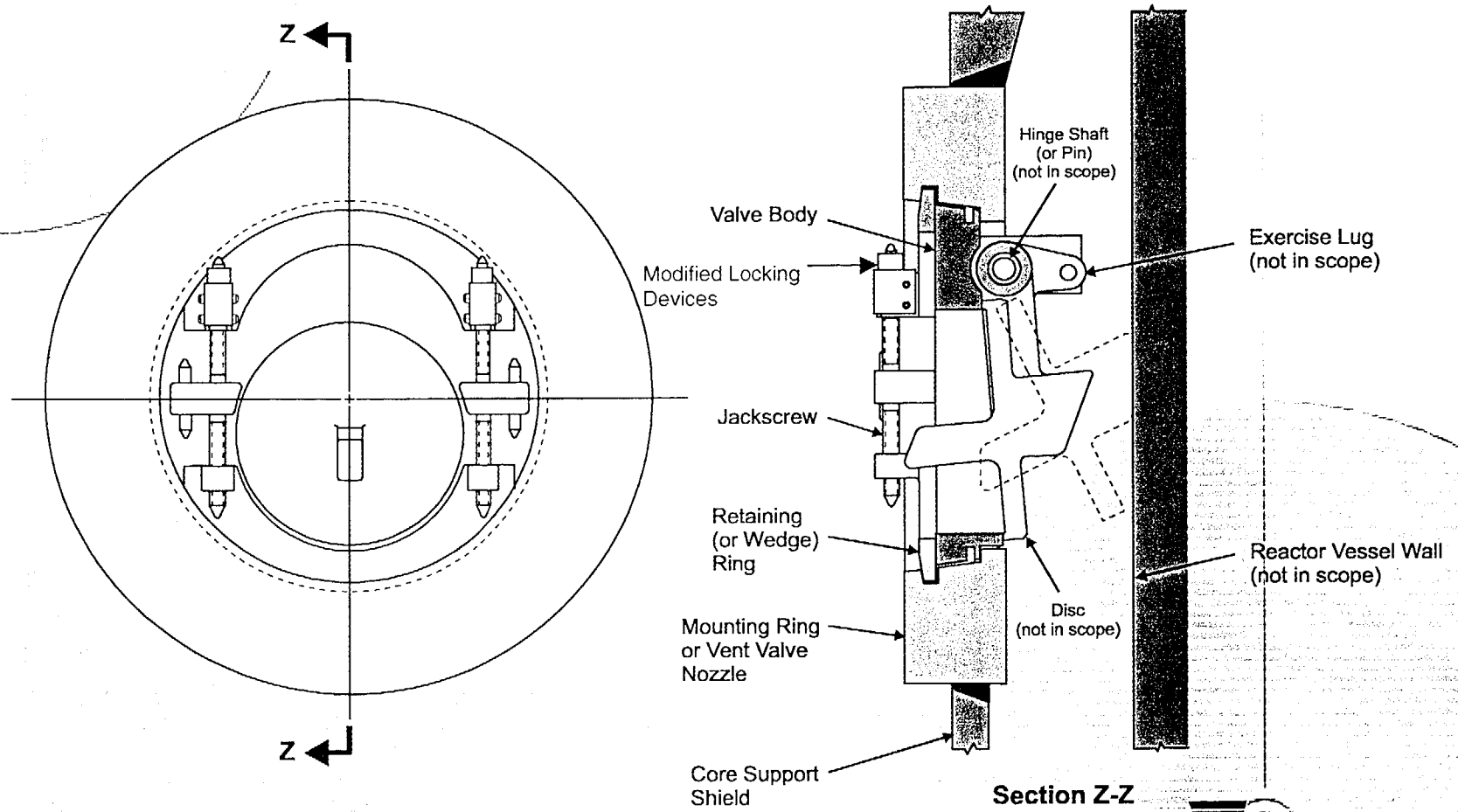

OTHER INTERNALS BOLTING

- Potential Aging Degradation Mechanisms
  - Irradiation-assisted Stress Corrosion Cracking
  - Stress Corrosion Cracking
  - Irradiation Embrittlement
  - Stress Relaxation
  - Void Swelling (may not occur, requires evaluation)
- MRP/JoBB Program Tasks to Provide Research Data and General Guidelines
- Current Plans are to Finalize the Inspection Attributes by 2010

Status of Baffle Bolt Safety Assessment

F. (Frank) M. Gregory,

Framatome Technologies, Inc.

REACTOR VESSEL INTERNALS BAFFLE BOLT FAILURE STRUCTURAL ANALYSIS

- Background
- Purpose
- Criteria
- Structural Design Basis
- Detailed Structural Analysis
- Status

Background

- Baffle Bolts Have Failed in European Plants Due to IASCC
- The NRC Has Issued IN 98-11 to Inform Utilities of This Issue
- The B&WOG Has Determined That the Potential for Baffle Bolt Failures Should Be Investigated and Initiated a Program in 1997 to Address the Issue

Purpose

- The Purpose of the Structural Analysis Is to Perform a Bounding Analysis Considering Baffle Bolt Failure Scenarios That Will Meet the Appropriate Acceptance Criteria

Criteria

- Core Geometry (Coolability)
- Control Rod Insertability
  - B&W designed plants must show compliance with 10CFR50.46 (PCT < 2200F & coolable geometry)
  - Core cooling requirements for design basis events:
    - No permanent fuel grid deformations on internal fuel assemblies
    - Minor grid deformations on outer fuel assemblies

Criteria

- Meeting Coolable Geometry Requirements Also Meets Control Rod Insertability Requirements
- Assuming Failed Baffle Bolts, Need to Address:
  - Fuel assembly grid deformation due to baffle plate impacts for faulted loading conditions
  - Remaining intact baffle plate bolts are acceptable

Structural Design Basis

- Analyses Documented in BAW-2292*
  - Baffle bolts in place
  - Addresses impact loads under seismic & LOCA conditions (& combination)
  - LOCA - Acceptance of LBB for primary piping; Hence design breaks are:
    - Core Flood Line Break
    - Decay Heat Line Break
    - Surge Line Break

*"Framatome Mark-B Fuel Assembly Spacer Grid Deformation in B&W-Designed 177-Fuel Assembly Plants," issued February 1997.

Structural Design Basis

Results:

- Impact Loads < Grid Deformation Load Limit
- No Permanent Grid Deformation

Initial Safety Assessment

- April 23, 1998 NRC Meeting, B&WOG Committed to Provide a Safety Assessment of Baffle Bolt Failures
- Two Documents Submitted:
  - 51-5000396-01 (FTI Proprietary)
  - 51-5001765-00 (FTI Non-proprietary)
- Conclusion - NO IMMEDIATE SAFETY CONCERN

Detailed Structural Analysis

Criteria:

- Baffle/fuel impact loadings acceptable
- Remaining intact baffle bolts acceptable

Tasks:

- Task 1- Hydraulics
  - Determine the pressure loadings on the baffle plates due to design break events.
- Task 2 - Baffle Bolt Stresses
  - FEM of core barrel/baffle/former area to determine a practical failure pattern based on normal stresses and fluence (gamma heating analyses).

Detailed Structural Analysis

Tasks: (Cont.)

- Task 3 - Structural Model and Analyses
  - Global analysis that determines the loadings on the baffle plates and grid displacement time histories.
- Task 4 - Detailed Fuel Assembly / Core Barrel Analysis
  - Determines fuel - fuel and fuel - baffle impact loadings and grid deformations.

Detailed Structural Analysis

Task 1 - Hydraulics Analysis

- Two Analyses - Skirt Supported Plants and Nozzle Supported Plant (Davis-Besse)
- Skirt Supported Plants:
  - Internal Hydraulics:
    - Used existing hydraulics model
    - Added detail in baffle bypass region
    - Ran design break cases
  - Cavity pressure analysis:
    - Completed as part of BAW-2292 work

Detailed Structural Analysis

Task 1 - Hydraulics Analysis (Cont.)

Nozzle supported plant (DB):

- Internal Hydraulics:
  - Upgraded existing model
  - Added detail in baffle bypass region
  - Ran design break cases
- Cavity pressure analysis:
  - Used existing cavity pressure model
  - Ran core flood line break
- Output - Hydraulic pressure loadings on the reactor vessel internals to be used in the structural analysis (Task 3)

Detailed Structural Analysis

Hydraulic Analysis:

- Building complex model
- Determine pressure differentials across key components during design breaks
- Results – loading time history input to the structural model (Task 3)

Key – Tracking of pressure waves critical to show acceptable results

Schematic of RVI Flow Paths

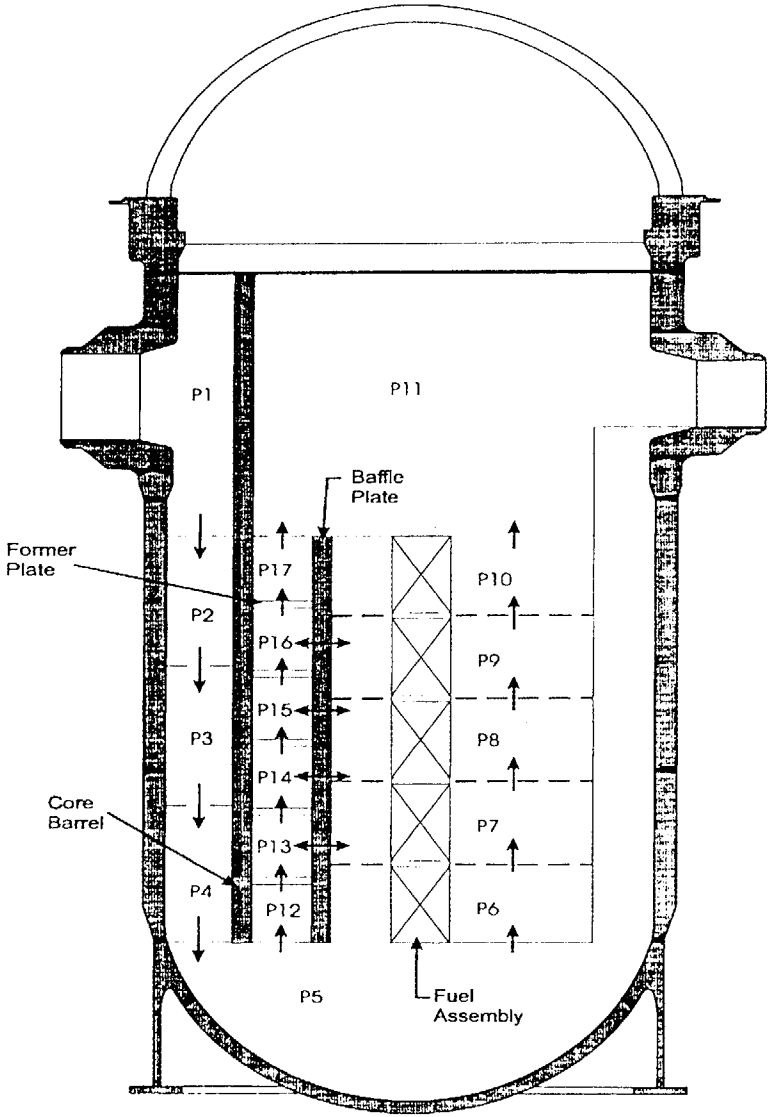

Detailed Structural Analysis

Task 2 – Baffle Bolt Stresses

- Determine a Practical Failure Pattern Based on Baffle Bolt Stresses and Fluence
- Developed FE Model of the Baffle / Former / Core Barrel Region
- Performed Gamma Heating / Thermal Analysis and Stress Analysis to Determine Stresses in the Baffle-Former Bolts
- Higher Stressed Baffle Bolt Locations Will Be Used to Help Determine Bolting Configuration in Task 3

Detailed Structural Analysis

Task 3 - Structural Model and Analyses

- Skirt Supported Plants
  - Modify existing structural dynamic model to incorporate:
    - Baffle plates
    - Former plates
    - Fuel assemblies
  - Account for local flexibilities of baffle plates
  - Consider various bolting configurations
  - Perform structural LOCA analysis (using results of Task 1)

Detailed Structural Analysis

Task 3 - Structural Model and Analyses (Cont.)

- Skirt Supported Plants (Cont.)
  - Perform seismic analysis
  - Determine optimum bolting configuration along with grid displacement time histories and baffle plate loading time histories for Task 4
  - Check remaining bolts for faulted loads

Detailed Structural Analysis

Structural Analysis:

- Build complex model
- Nonlinear – one-way springs for missing bolts
- Nonlinear – bolts in tension; formers in compression
- Results – fuel grid crush loads

Schematic of RVI Structural Model

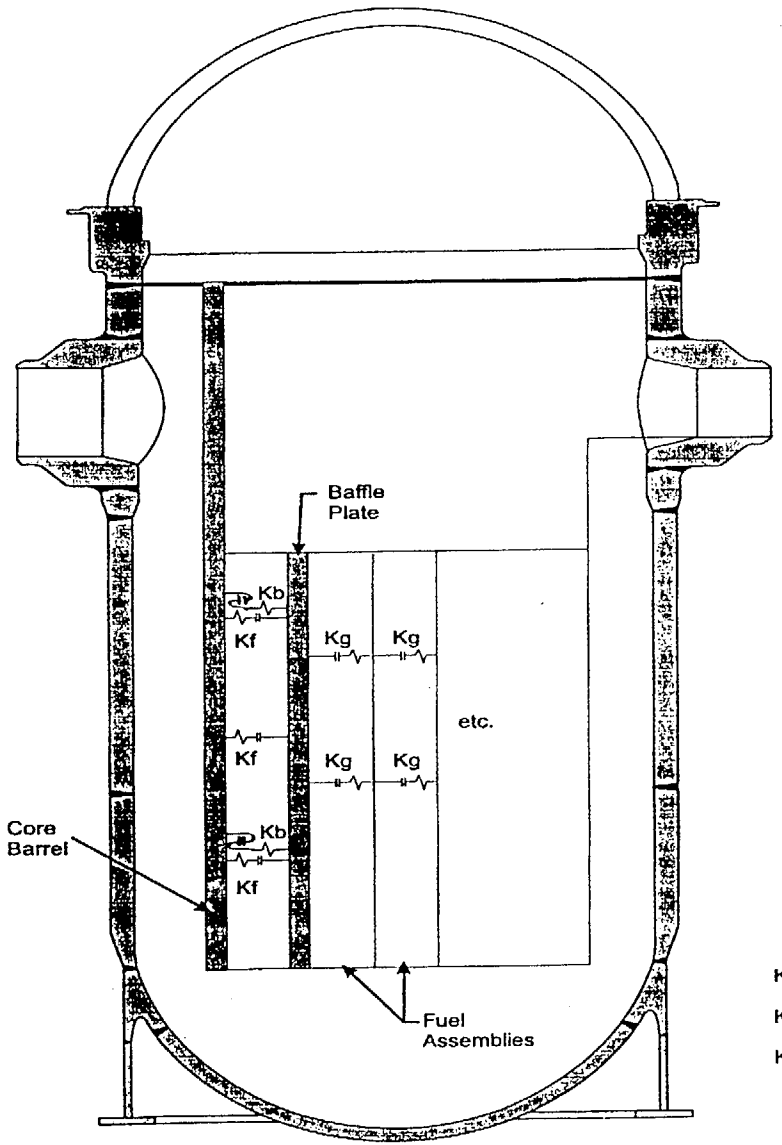

Kf - Former Plate

Kb - Baffle Bolt

Kg - FA Grid

Detailed Structural Analysis

Task 3 - Structural Model and Analyses (Cont.)

Nozzle Supported Plant (DB):

- Modify skirt supported model to reflect Davis-Besse nozzle supported plant
- Repeat skirt supported plant workscope considering bolting configuration results

Detailed Structural Analysis

Task 4 - Detailed Fuel Assembly / Core Barrel Analysis

- Refine detailed fuel assembly model to add core barrel, baffle plates, and former plates
- Use bolting configuration from Task 3
- Use core plate motions and loading time histories from Task 3

Detailed Structural Analysis

Task 4 - Detailed Fuel Assembly / Core Barrel Analysis (Cont.)

- Determine impact loadings of fuel assembly-to-baffle plates and fuel assembly-to-fuel assembly for various fuel assembly configurations
- Show fuel assembly deformations are acceptable

STRUCTURAL ANALYSIS
Skirt Supported Plants
-- STATUS --

RV Internal Hydraulics Analysis

--Completed in 1997--

RV Asymmetric Cavity Pressure Analysis

--Completed (as part of BAW-2292)--

Core Assembly FEM Baffle Bolt Stress Analysis

--Completed in 1999--

System Structural Analysis

Refine model
Perform LOCA nonlinear T-H analysis
Perform seismic nonlinear T-H analysis
Check bolt loads
Determine grid plate motions

-- In Progress --

Detailed Baffle / Fuel Assembly Analysis

Refine model
Use core plate motions and baffle plate loads
Determine impact loads and grid deformations

-- 3rd-4th Quarter 2000 --

STRUCTURAL ANALYSIS
Nozzle Supported Plant (DB)
-- STATUS --

RV Internal Hydraulics Analysis

--Completed in 1998--

RV Asymmetric Cavity Pressure Analysis

--Completed in 1999--

Core Assembly FEM Baffle Bolt Stress Analysis

--Completed in 1999--

System Structural Analysis

Modify skirt supported model to reflect DB
Perform LOCA nonlinear T-H analysis
Perform seismic nonlinear T-H analysis
Check bolt loads
Determine grid plate motions

-- In Progress --

Detailed Baffle / Fuel Assembly Analysis

Use skirt support plant model
Use core plate motions and baffle plate loads
Determine impact loads and grid deformations

-- 3rd, 4th Quarter 2000 --

Open Discussion/NRC Comments