ORIGINAL ACRST-3117

OFFICIAL TRANSCRIPT OF PROCEEDINGS
NUCLEAR REGULATORY COMMISSION
ADVISORY COMMITTEE ON REACTOR SAFEGUARDS

Title: MEETING: ACRS/ACNW JOINT SUBCOMMITTEE

TRO4 (ACRS)
RETURN ORIGINAL only
TO BJWHITE
M/S T-2E26
415-7130
THANKS!

Docket No.:

Work Order No.: ASB-300-1271

LOCATION: Rockville, MD

DATE: Thursday, May 4, 2000

PAGES: 1 - 236

ANN RILEY & ASSOCIATES, LTD.
1025 Connecticut Ave., NW, Suite 1014
Washington, D.C. 20036
(202) 842-0034

ACRS Office Copy - Retain
for the Life of the Committee

DISCLAIMER

UNITED STATES NUCLEAR REGULATORY COMMISSION'S
ADVISORY COMMITTEE ON REACTOR SAFEGUARDS

May 4, 2000

The contents of this transcript of the proceeding of the United States Nuclear Regulatory Commission Advisory Committee on Reactor Safeguards, taken on May 4, 2000, as reported herein, is a record of the discussions recorded at the meeting held on the above date.

This transcript had not been reviewed, corrected and edited and it may contain inaccuracies.

1 UNITED STATES OF AMERICA

2 NUCLEAR REGULATORY COMMISSION

3

4 ***

5 MEETING: ACRS/ACNW JOINT SUBCOMMITTEE

6

7

8

9 U.S. NRC

10 Two White Flint North, Room T2-B3

11 11545 Rockville Pike

12 Rockville, MD

13

14 Thursday, May 4, 2000

15

16 The committee met, pursuant to notice, at 8:30

17 a.m.

18 MEMBERS PRESENT:

19 JOHN GARRICK, ACRS Chairman

20 THOMAS KRESS, ACRS Co-Chairman

21 GEORGE APOSTOLAKIS, ACRS, Member

22 GEORGE HORNBERGER, ACRS, Member

23

24

25

1 C O N T E N T S

PAGE	ITEM
Introduction	3
Overview: Risk-Informing NMSS Activities	4
Status of SECY-99-100 Efforts: Training, Workshop, Criteria, Safety Goals	33
A Process for Risk-Informed Regulation of Activities	109
PRA for Dry Cask Storage	119
Nuclear Byproduct Materials Risk Review	201
Matrix Summary of Risk Assessment Results for Byproducts Materials Activities	201
Proposed Rule for Domestic Licensing of Special Nuclear Material	236

1 P R O C E E D I N G S

2 [8:30 a.m.]

3 DR. GARRICK: Good morning. Our meeting will now
4 come to order. This is a meeting of the joint subcommittee
5 of the Advisory Committee on Reactor Safeguards and the
6 Advisory Committee on Nuclear Waste. I'm John Garrick, co-
7 chairman of the joint subcommittee. On my right is Tom
8 Kress, also co-chairman of the committee. Joint
9 subcommittee members in attendance are George Apostolakis of
10 the Advisory Committee on Reactor Safeguards and George
11 Hornberger of the Advisory Committee on Nuclear Waste.
12 The purpose of this meeting is for the joint
13 subcommittee to discuss the development of risk-informed
14 regulation in the Office of Nuclear Material Safety and
15 Safeguards, including risk-informing fuel cycle programs,
16 integrated safety assessments, byproduct material risk
17 analysis, dry cask storage risk analysis, the results of a
18 public workshop on the use of risk information in regulating
19 the use of nuclear materials and related matters. Sounds
20 like a busy day.
21 The subcommittee will gather information; analyze
22 relevant issues and facts; and formulate some positions and
23 actions as appropriate for deliberation by the full
24 committees. Richard Major is the designated Federal
25 official for the initial portion of this meeting. The rules

1 for participation in today's meeting have been announced as
2 part of the notice of this previously published in the
3 Federal Register, part of the notice previously published in
4 the Federal Register. A transcript of the meeting is being
5 kept, and it's requested that speakers identify themselves,
6 speak with clarity and volume so that they can be heard.
7 We've received no written comments from members of
8 the public, but we have received one request from Robert
9 Bernero for time to make an oral statement, and right now,
10 it's hopeful that we can fit that in right after our second
11 presentation and perhaps just before or just after the
12 break.
13 Our first speaker will be Marty Virgilio, deputy
14 director of the Office of Nuclear Materials Safety and
15 Safeguards, and unless there are some comments or questions
16 from the members, I think we'll proceed, Marty, and let you
17 take the floor.
18 DR. VIRGILIO: Thank you; good morning. I am
19 Marty Virgilio, for the record, deputy director of our
20 Office of Nuclear Materials Safety and Safeguards, and I'd
21 like to start with a thank you to the committee members for
22 taking the time to meet with us today. I look forward to a
23 productive exchange of ideas.
24 With me today, I have John Flack, who will be
25 speaking to you next. You may know John from his

1 responsibilities in the Office of Research, but John has
2 been working with us for the last several months heading up
3 this risk group that we have formed in NMSS. Also today,
4 you'll have a chance to meet some of the members of the risk
5 group. You may have met some of them before in the other
6 responsibilities: Stacy Rosenberg will be with us today.
7 Stacy has been a risk expert in the office of NRR, and I
8 believe that at one point in time, that she may have briefed
9 you on a risk assessment that she was responsible for on
10 Kiwi Dam, where we were looking at the safety requirements
11 necessary to ensure protection for the Oconee Nuclear Power
12 Station. Stacy was responsible for that effort.
13 We also have Dennis Damon with us today. Dennis
14 is going to be talking us a little bit later about fuel
15 cycle facility safety and the ISAs that are being performed
16 or being required there as a part of our new Part 70. Jim
17 Smith is here with us today. Jim is also a member of the
18 group. He's our medical and industrial link, and Christiana
19 Lew, which I know you've met and had interactions with
20 Christiana over the high-level waste program.
21 We also have Alan Rubin with us today. Alan is
22 from the Office of Research. He will talk to us today about
23 the PRA that Research is doing to help us in understanding
24 some of the issues surrounding high level waste storage, and
25 Betsy Ulrich will be coming down from region 1. Betsy is

1 not here yet but will be making a presentation to you later
2 this morning or early this afternoon on a material risk
3 study that we had done.
4 What we have in store for you all today is an
5 exchange on the overview of our program and the status of
6 our current activities, and then, we'll have the individual
7 presentations on the cask storage, on Part 70, the fuel
8 cycle facility requirements and the ISAs and also on the by-
9 product materials risk review study. If I can have the
10 first slide, please. Next slide, please.
11 Just by way of background, and I know you're all
12 familiar with this, but I thought it just again for the
13 record, and maybe the audience, going through the
14 chronology; we started, I think, in earnest looking at risk-
15 informing the waste and material activities in 1997 with a
16 commission paper where we laid out some ideas as to
17 direction and received some feedback from the Commission on
18 our approach. And in March of 1999, we put forward a
19 Commission paper, SECY 99-100, that provided a lot more
20 detail on our proposed approach, areas where we were
21 considering risk-informing our programs and activities.
22 The Commission responded to that SECY paper in
23 June of 1999 with an SRM and provided more direction to us,
24 additional ideas and thoughts about which directions that we
25 ought to be proceeding in, and in July of 1999, we

1 established a task force to move this effort forward. On
2 the next page, if I could have the next slide, please, just
3 going back to SECY 99-100, we had a number of
4 recommendations in that, the first being that we proceed to
5 implement a five-step process, and I've got another slide in
6 a few seconds I'll show you on that five-step process and
7 that we continue to implement our approaches for addressing
8 risk management issues, our ongoing activities and that the
9 Commission approve the formation of a joint subcommittee
10 that would help us with constructive criticism and peer
11 review of our ongoing activities and ideas for directions in
12 the future.
13 On the next slide, you can see the SRM, and
14 basically, the Commission accepted the proposal that we laid
15 out, those three ideas I put on the last slide, and in
16 addition provided some additional guidance to us. They
17 asked us to develop materials safety goals; they asked us to
18 make sure that we were using an enhanced participatory
19 process to develop the goals and include within the goals
20 the avoidance of property damage. They asked us to consider
21 critical groups and whether critical groups could be defined
22 like we have done in the high-level waste forum for other
23 activities in assessing risk and managing risk.
24 DR. APOSTOLAKIS: What is the logic behind
25 avoiding property damage here and not including land

1 contamination for reactors?

2 DR. VIRGILIO: None that I -- you know, and I --

3 it's a good question as to where we --

4 DR. KRESS: I would guess, George, that they're

5 focusing on the Yucca Mountain type issue or -- you'd

6 probably only get property damage as a real consequence in

7 the accidents. That would be my guess.

8 DR. VIRGILIO: Tom, as we go through and look at

9 some of the material activities that we have and some of the

10 issues that we're dealing with today, we're not only dealing

11 with radiological contamination, but if you think about

12 issues that we're dealing with like Atlas, Moab, we're also

13 dealing now with more environmental issues in the waste and

14 material arena than on the reactor issue, and I think this

15 was on the Commission's mind --

16 DR. KRESS: Yes, I think --

17 DR. VIRGILIO: -- at the time that they were

18 generating this SRM. It was not only the repository, but I

19 think it was some of these other issues.

20 DR. KRESS: Right; it's environmental

21 contamination in general.

22 DR. VIRGILIO: The SDNP sites that we're involved

23 in; there are so many different issues that we're involved

24 in today that includes the environment and property

25 considerations that I think it was only logical that they

1 went that way. But then again, you say, well, why aren't we
2 going in that direction for reactors, which I think, you
3 know, is a little outside my scope but might be something to
4 consider as we move forward in that front.
5 DR. KRESS: I think we ought to do it.
6 DR. APOSTOLAKIS: Yes, but, I mean, the staff has
7 come back and said that they will not include it, right?
8 DR. KRESS: They only include it in regulatory
9 analysis.
10 DR. APOSTOLAKIS: Yes, but not part of the
11 quantitative --
12 DR. KRESS: They don't have quantitative safety
13 goals.
14 DR. APOSTOLAKIS: Yes.
15 DR. KRESS: There are some people I've heard say
16 that it's subsumed within the two goals that they have to
17 some extent.
18 DR. APOSTOLAKIS: Yes.
19 DR. KRESS: But I don't believe that.
20 DR. GARRICK: Okay.
21 DR. VIRGILIO: Okay; and last, they asked us to
22 ensure that we include the agreement state component in our
23 thought processes; today, we have 31 agreement states, and
24 there are four more eager to join the program and so --
25 DR. APOSTOLAKIS: On the previous slide, again, I

1 have another question.

2 DR. VIRGILIO: Sure.

3 DR. APOSTOLAKIS: What's a critical group?

4 DR. VIRGILIO: In the context of Yucca Mountain is

5 the best way that I can describe it --

6 DR. APOSTOLAKIS: Yes.

7 DR. VIRGILIO: -- by example is that we are

8 looking at the effects of the plume that could be predicted

9 to leave the repository; on a group -- a hypothetical group,

10 a farming community living within the vicinity of the

11 repository, and we're looking at the effects on that group.

12 We're looking at how much will they receive in terms of dose

13 as a result of hypothetical accidents that could occur at

14 Yucca Mountain. You could think about critical groups in

15 terms of transportation, another example that we haven't

16 gone down. This is my example, but you could think about

17 transporting a cask down the road and possibly having a

18 critical group or a target for assessing risk to the public

19 as a family in a car driving alongside that cask or, you

20 know, or somebody -- or the folks that work at the truck

21 stop, where the truck might stop on its route.

22 DR. APOSTOLAKIS: Yes.

23 DR. VIRGILIO: So it's hypothetical groups of

24 members of the public and how they might be exposed to

25 radiation as a result of accidents, upsets or normal

1 activities associated with the program.

2 DR. APOSTOLAKIS: Now, why don't we use the term

3 in reactors?

4 DR. KRESS: Critical groups?

5 DR. APOSTOLAKIS: Yes; I mean, we use the idea.

6 DR. KRESS: Yes, we use the idea.

7 DR. APOSTOLAKIS: But not -- is part of this joint

8 subcommittee trying -- part of the purpose of existing here

9 is to harmonize the terminology, perhaps? I mean, what's so

10 different here? I mean, you have to try a little harder, I

11 think, to define the critical group. There was a

12 controversy in that Academy report regarding what the group

13 is because of the huge time scales. But it would be

14 helpful, I think, to start using the same terms.

15 DR. HORNBARGER: What term is used in reactors?

16 DR. APOSTOLAKIS: Nothing; we just say individual

17 risk, societal risk.

18 DR. HORNBARGER: But you have to use an N

19 individual.

20 DR. APOSTOLAKIS: Yes.

21 DR. HORNBARGER: So it's an individual and not a

22 group.

23 DR. APOSTOLAKIS: It's not a group at this time.

24 DR. KRESS: It's a group averaged into --

25 DR. HORNBARGER: Okay; so, it's the same idea,

1 then.

2 DR. APOSTOLAKIS: Well, the way it's calculated -

3 -

4 DR. HORNBARGER: It's the individual; it's the

5 sort of average individual in a critical group.

6 DR. APOSTOLAKIS: Exactly.

7 DR. HORNBARGER: Yes.

8 DR. APOSTOLAKIS: Exactly; but it's supposed to

9 be, you know, the community surrounding the reactor, I

10 suppose.

11 DR. HORNBARGER: Yes.

12 DR. APOSTOLAKIS: You don't have to make any

13 hypothesis, because you know who they are.

14 DR. KRESS: Yes; it's the ones living around

15 the --

16 DR. APOSTOLAKIS: Yes.

17 DR. HORNBARGER: Right.

18 DR. APOSTOLAKIS: So either there is no --

19 DR. HORNBARGER: Well, you still have to make an

20 hypothesis, because the community can grow --

21 DR. KRESS: Yes.

22 DR. APOSTOLAKIS: That's right.

23 DR. HORNBARGER: -- over the lifetime of the

24 reactor.

25 DR. APOSTOLAKIS: That's right so --

1 DR. KRESS: That's supposed to be part of the
2 analysis, protecting that. But you don't have to worry
3 about 10,000 years either.
4 DR. HORNBARGER: It's a better guess.
5 DR. APOSTOLAKIS: Yes.
6 DR. VIRGILIO: Next slide, please. I think we've
7 covered that one.
8 Just to go back to SECY 99-100 for a moment, the
9 Commission endorsed the staff's approach to a five-step
10 process. Those steps really boil down to identifying the
11 candidate applications, where we would want to move forward
12 and risk-inform our programs; decide how we would then
13 modify our regulatory approaches; change the approaches; and
14 then implement the program, and in parallel with that, we
15 would be developing or refining the risk tools that we have
16 available to us through the reactor program and through our
17 own program activities.
18 If we go to the next slide, after our last
19 interaction, and sometime in the November time frame, you
20 wrote a letter to Chairman Meserve and recommended that we
21 do a number of things. We saw that the two key things
22 within your recommendations being that you asked us to
23 develop a set of principles and a safety goal approach for
24 each of the NMSS-regulated activities, and you asked us to
25 identify analytical methods to be applied to implement these

1 approaches on an application-specific basis.

2 If you go to the next slide, Pat, we wrote you

3 back in January, and we told you that we would develop

4 screening criteria, and here we were being or trying to be

5 as responsive as we could to your recommendation on a set of

6 principles, so this is the way we were approaching it, by

7 developing screening criteria for determining what we would

8 move forward with and risk-inform in specific applications.

9 We also said that we would examine experience with risk

10 assessment methods, measures and metrics currently being

11 applied. Here again, we were being responsive to your

12 recommendation that we look at our analytical methods.

13 In addition to responding to your recommendations,

14 we told you that we were going to move forward using the

15 enhanced participatory process; scheduling meetings and

16 workshops with interested parties and that we would begin to

17 develop our training program.

18 If you go to the next slide, please, what I want

19 to do is give you a little bit of status on where we are on

20 what we told you we were going to do. What we did is we

21 developed and published in the Federal Register some draft

22 screening criteria for identifying those areas where we

23 should apply risk-informed approaches. We solicited public

24 participation in the development of the screening criteria

25 and safety goals in a workshop we had just a couple weeks

1 ago.

2 We are currently in the process of examining our
3 methods, measures and metrics that we would apply in NMSS to
4 confirm that we are on the appropriate approaches, and
5 today, we'll share with you some of the specific
6 applications and some of the methods that we're using and
7 hopefully get some feedback from you on whether we're on
8 track with regard to those programs. And lastly, I think
9 we've made significant progress in developing our training
10 program.

11 On the next slide, I just highlight some current
12 activities we have ongoing a little bit outside of the scope
13 of what we've been corresponding with you on. We've made
14 some organizational changes. We've brought the risk group
15 that we had formulated and residing in one of our technical
16 divisions up to the front office, so now, the risk group
17 reports directly to Bill Kane and I, and we've established a
18 steering group, and I think you'll recognize some of the
19 members of the steering group. They include, within NMSS,
20 Don Kuhl and John Grieves and Mike Weber. And then, from
21 outside NMSS, Gary Hollohan, Tom King from research; Bruce
22 Malik from Region II and Joe Gray from OGC.

23 In addition to supporting Tom, we also have Joe
24 Murphy, who has been in and out of this process, but I think
25 we've got a very strong steering group now to help ensure

1 that we stay on track. And today, we'll talk a little bit
2 about some of the activities that we have ongoing, including
3 the ISAs for the fuel cycles; the byproduct material risk
4 analysis; the PRA for dry cask storage, and I understand
5 that the full committee got a recent briefing on
6 transportation and where we're going on our risk studies
7 there. So we didn't put it on the agenda today, but we
8 could come back to you again in the very near future and
9 give you an update on where we're going on our
10 transportation risk studies.
11 On the next slide, just highlighting that we're
12 increasing our interactions with the stakeholders. We had a
13 Commission meeting in March on the risk-informed regulatory
14 implementation plan. A subset of that is where are we going
15 in the waste and materials arenas, and we had the public
16 workshop in April that I mentioned earlier. And John Flack
17 is going to go into a lot more detail about what we heard
18 from the stakeholders at the public workshop and some of our
19 analysis of those thoughts.
20 John will also talk about the three-tiered
21 approach to training that we have, and just so you
22 understand just the background, we thought about it in terms
23 of tiers and the first tier being the managers, making sure
24 they had a fundamental understanding of what we were doing
25 and then the second tier being all the staff, all the

1 technical staff that we have in the waste and material
2 arenas, including the staff working in the regional offices
3 and making sure they had a basic understanding of what we
4 were doing in these programs and then the third tier being
5 more advanced training for the people who would actually be
6 employing these risk assessment methods and using risk
7 management techniques as appropriate that come out of the
8 analysis.
9 So it's a three-tiered approach, and again, John
10 Flack will explain that in a lot more detail.
11 Just to highlight and introduce what John will
12 talk about on the next slide is the April workshop. We had
13 participants from other Government agencies. We had other
14 representatives from all of the regulated industries; public
15 groups and other interested parties participating, and
16 transcripts are now available. We're having copies of the
17 transcript made so you can see that, and I think it was a
18 very good workshop. Everybody was well-engaged, and we got
19 a lot of good feedback, and John is going to share with you
20 specifically some of the ideas in detail.
21 The focus of the workshop was basically two-fold.
22 The first part of it was looking at the screening criteria,
23 and we introduced that screening criteria and took comments
24 on it; looked at examples. We actually asked the --
25 challenged the group that said not only give us comments on

1 the screening criteria but other examples of various --
2 where we should move forward independent of the screening
3 criteria and also pilot applications, and we'll talk a
4 little bit more in detail about that.
5 And we solicited input on development of the
6 safety goals. We had this laid out for a day and a half,
7 and quite truthfully, I thought we were going to spend most
8 of the time talking about the screening criteria, but when I
9 go back and look at the transcript, we spent most of the
10 time talking about the safety goals, which was very
11 productive. I think it was a really good meeting and a lot
12 of good ideas on how to proceed with a process for
13 developing safety goals.
14 DR. KRESS: When you talk about safety goals in
15 this arena, are you talking about some sort of risk
16 acceptance criteria for individual facilities?
17 DR. VIRGILIO: At this point, what we're doing is
18 trying to decide how best to attack this, and we had thought
19 about maybe going down seven paths consistent with some of
20 your guidance. We have seven programs within the NMSS waste
21 and material program, and I think we're refining our
22 thoughts on that. There may be a better approach and maybe
23 bringing that down to five and individually maybe working
24 forward in some way to define safety goals in those five
25 specific areas, and John will get into a lot more detail

1 about this but not necessarily on a facility level but
2 starting maybe on one area, on medical, on another area,
3 maybe on the facilities, on the industrial facilities and
4 try to define goals in each of those areas and then seeing
5 if we could step back and say is there an overarching goal,
6 you know, that would cover the five or the seven areas but
7 working from the bottom up, working in areas and building to
8 see if we can get some overarching safety goals.
9 DR. KRESS: On a more general level, when you say
10 goals, is that something to be strived for or something that
11 has to be met?
12 DR. VIRGILIO: No, we're thinking in terms of a
13 hierarchy of overarching goals that would then be supported
14 by regulations that would have to be met.
15 DR. KRESS: Okay.
16 DR. VIRGILIO: And we're also trying to make sure
17 we have a clear idea in our minds of how these overarching
18 goals fit within the context of the Commission's strategic
19 goals. We've got a -- I don't know if you've had a chance
20 to see the latest strategic goals and performance goals that
21 the Commission is now finalizing, but there has to be a
22 hierarchy, I think, between these goals, the Commission's
23 safety goals and performance goals and then the regulatory
24 requirements.
25 DR. KRESS: That disturbs me a little, because I

1 don't see the connection, frankly.

2 DR. VIRGILIO: And we have to make that

3 connection. We have to do that.

4 DR. APOSTOLAKIS: But if you find goals, and then,

5 you have regulatory criteria based on those goals that must

6 be met, aren't you implying that the goals are in fact

7 defining adequate protection?

8 DR. VIRGILIO: I would rather stay with the

9 regulations defining the adequate protection and the goals

10 being an overarching framework.

11 DR. APOSTOLAKIS: So the regulations, then, will

12 not be derived from the goals.

13 DR. VIRGILIO: The regulations have to be derived

14 from the goals and consistent with the goals.

15 DR. APOSTOLAKIS: Yes; consistent, I understand.

16 DR. VIRGILIO: And any new regulations --

17 DR. APOSTOLAKIS: You have to be careful here.

18 DR. VIRGILIO: Yes.

19 DR. APOSTOLAKIS: You know, the distinction

20 between goals and adequate protection.

21 DR. VIRGILIO: We have to be abundantly clear in

22 defining that, and right now, I think we've got, you know,

23 and we've got goals; we've got strategic goals; and we've

24 got regulations. And as we move forward in the waste and

25 material arena, it's critical to us that we understand the

1 linkages and relationship between those three components of
2 our framework.
3 DR. KRESS: Normally, the goals put forth in the
4 strategic plan are sort of a measure of how well NRC does
5 its job of overseeing. Now, we're talking about a
6 regulation that deals -- regulations that deal with the
7 actual design and implementation thing. It seems to me like
8 those are two separate things and not necessarily -- they
9 don't necessarily have to be related to each other at all.
10 DR. VIRGILIO: I would say that the goals, you
11 know, are the outcomes that you're trying to achieve: no
12 deaths; you know, no destruction of property, you know, no
13 loss of property. I mean, those are the goals you're trying
14 to achieve, and the way you achieve --
15 DR. KRESS: When is that applied? Over the next
16 year? The next 5 years or --
17 DR. VIRGILIO: Well, the strategic goals are meant
18 to be enduring. If you think about the Commission's
19 strategic goals, they're meant to be long-lasting, enduring
20 goals.
21 DR. KRESS: No deaths forever.
22 DR. VIRGILIO: Right.
23 DR. KRESS: Well --
24 DR. VIRGILIO: No deaths.
25 The performance goals that they have in that same

1 book are meant to be 5-year goals. They're meant to be --
2 let's see how we're going to do for the next 5 years in
3 meeting those overarching, enduring requirements. And then,
4 I see the regulations as being the mechanisms, you know, the
5 requirements that we're going to impose on the regulated
6 communities for meeting, you know, to help ensure that we
7 achieve those outcomes.
8 DR. KRESS: Yes; well, that's what bothers me,
9 because your regulations are sort of one-time things. These
10 goals are going to be re-established year after year after
11 year. Are you going to change the regulations to meet the
12 new goals, or are you going to set up your regulations based
13 on another set of criteria and then worry about the goals
14 when you talk about inspection, operations and other things?
15 You see, that's the connection that bothers me.
16 DR. APOSTOLAKIS: It's not clear to me at all what
17 the role of the goals ought to be in the regulation, because
18 the regulations, really, are dealing with adequate
19 protection.
20 DR. KRESS: That's the other thing that bothers
21 me, absolutely, George.
22 DR. APOSTOLAKIS: I mean, if you go to reactors,
23 and it takes even at 10^{-4}, which is a subsidiary goal for
24 core damage frequency --
25 DR. VIRGILIO: Right.

1 DR. APOSTOLAKIS: -- I don't think you will find
2 any regulation that is derived from that.
3 DR. KRESS: Except the backfit rule.
4 DR. APOSTOLAKIS: Well, then, there's one.
5 DR. KRESS: But, you know, that's a special.
6 DR. APOSTOLAKIS: And we have plants right now
7 that have CDF above the goal, and they're allowed to
8 operate. So I think that there is a real issue here, the
9 distinction between goals and adequate protection, and there
10 has been reluctance to define adequate protection
11 quantitatively, not only from you, or I don't even know
12 whether you are objecting to it, but in the reactor arena,
13 we were told that they would rather stay away from it,
14 because adequate protection is not just a number. It's the
15 result of a whole process, where the numbers are only part
16 of the process.
17 But I think there is a real issue there: how do
18 you interpret these defined criteria and quantities.
19 DR. GARRICK: But this is an old issue, George.
20 DR. APOSTOLAKIS: Yes.
21 DR. GARRICK: I'm looking at a SECY 89-102 written
22 in 1990, and it's pretty clear on its distinction between
23 adequate protection and goals. It says the Commission
24 believes that adequate protection is a case-by-case
25 finding --

1 DR. APOSTOLAKIS: Yes.

2 DR. GARRICK: -- based on evaluating a plant and
3 site combination and considering the body of our
4 regulations.

5 DR. APOSTOLAKIS: Right.

6 DR. GARRICK: Safety goals are to be used in a
7 more generic sense and not to make specific licensing
8 decisions.

9 DR. APOSTOLAKIS: Yes; but that was in 1989.

10 DR. GARRICK: Yes.

11 DR. APOSTOLAKIS: Now, we want to use the goals on
12 a plant-specific basis.

13 DR. KRESS: To risk-inform the --

14 DR. APOSTOLAKIS: Which would upset this, I mean,
15 it would change that.

16 DR. KRESS: Yes; I think that would upset that
17 concept.

18 DR. APOSTOLAKIS: But the question is how do you
19 use it? If you adjust the goal rather than the definition
20 of adequate protection; I mean, they're two different
21 things.

22 So you're going to have the same problem here, I
23 think.

24 DR. VIRGILIO: And this was discussed; you can see
25 in the transcript a number of the stakeholders raised this

1 issue of the relationship between the goals and the
2 regulations, and I think, yes, we have a challenge.
3 On the next slide, John will go into a lot more
4 detail, but I just wanted to sort of ground you at a fairly
5 high level as to what were some of the recommendations we
6 got from the participants at the workshop, and basically,
7 they had a number of comments with respect to the screening
8 criteria. There was, I think, a very strong consensus to
9 pursue safety goals and to do it as a series, not to try to
10 start with one single goal but to work down parallel paths
11 looking at the groups of activities that we do and see if we
12 could establish goals for individual groups first.
13 If you go to the next slide, the participants also
14 recommended that we summarize the results --
15 DR. APOSTOLAKIS: Excuse me again. Let me
16 understand the criteria; I'm sorry.
17 DR. VIRGILIO: Okay.
18 DR. APOSTOLAKIS: The criteria will be used how?
19 DR. VIRGILIO: The criteria that we put out at the
20 workshop --
21 DR. APOSTOLAKIS: Yes.
22 DR. VIRGILIO: Actually, we put a Federal Register
23 out first and then discussed at the workshop would be used
24 to identify new areas where we would move forward to risk-
25 inform. That was the purpose of the criteria.

1 DR. APOSTOLAKIS: Oh, oh, oh, oh, oh. That's
2 different.
3 DR. VIRGILIO: Why would you go about risk-
4 informing a new activity or an existing activity? And so,
5 we laid out a number of criteria that one would have to meet
6 in order to decide. And we took this from your
7 recommendations on principles.
8 DR. APOSTOLAKIS: Yes.
9 DR. VIRGILIO: For how do you go about approaching
10 risk-informing your program? You suggested that we define
11 some principles. And so we, instead of calling it
12 principles, we called it this criteria and screening
13 criteria.
14 DR. APOSTOLAKIS: So the criteria are not to be
15 used to identify unacceptable risks.
16 DR. VIRGILIO: No, sir; it was strictly to say
17 that this was an area where it was ripe for a risk-informed
18 approach, and so, we would look at it using this screening
19 criteria.
20 DR. APOSTOLAKIS: Another dream crushed by
21 reality. I thought you were going to define that, which
22 would have been a definition, a semi-definition of adequate
23 protection.
24 DR. VIRGILIO: Not yet.
25 DR. APOSTOLAKIS: Not yet; right.

1 DR. KRESS: They do have what they call
2 quantitative acceptance criteria in this document here,
3 which is a good step in the right direction.
4 DR. APOSTOLAKIS: Okay.
5 DR. VIRGILIO: Other participant recommendations
6 are just to summarize the results and inform the Commission
7 and hold more workshops. There was a desire on a number of
8 the stakeholders to get out and talk -- and we're talking
9 about regional areas, not necessarily NRC regional areas but
10 to get some more local input on the development of the
11 goals, local values, local desires.
12 There was a desire that we continue to work in a -
13 - with the group that we had or similar groups to develop
14 the safety goals through a consensus process, and there was
15 also, I think, a general agreement that we can develop
16 safety goals in parallel with continuing to risk-inform our
17 processes, not that we have to have the goals first.
18 That pretty much summarizes what I wanted to tell
19 you. If you have any additional questions on my
20 presentation, I'd be happy to take them now. John Flack is
21 going to provide a lot more detail on the training program,
22 the workshop recommendations, and John will actually talk as
23 well about some of our next steps: where do we go from
24 here? And any questions for me before I turn it over to
25 John?

1 DR. KRESS: Yes; on your concept of having several
2 groups of activities, each of which would have its own
3 safety goal, do you have some overriding principle that
4 would integrate those and make them all consistent? And
5 what I have in mind there is some sort of cost-benefit.
6 Here's this activity. It has some assessed benefit to
7 society. Therefore, we're willing to accept some cost of
8 having an accident due to that as a result, and maybe that
9 cost versus benefit could be the same number for each of the
10 activities, and since you would have different benefits, you
11 would have different costs, which would lead to different
12 acceptance criteria.
13 Do you have some sort of overriding principle like
14 that that you're trying to use?
15 DR. VIRGILIO: Not yet, but I think, you know, we
16 want to go to some overarching principle that would if not
17 provide consistency provide harmony or at least a logical
18 approach to looking at each of the five or seven areas that
19 we proceed down. I think we have to do that, but we haven't
20 thought through to the point of on what basis would you
21 establish that overarching view?
22 DR. KRESS: Well, I think you have to have
23 something, because you can't -- I mean, it's --
24 DR. VIRGILIO: Yes.
25 DR. KRESS: -- it's going to be incoherent if you

1 just pick each one out of the air. There needs to be
2 something to tie them together.
3 DR. VIRGILIO: And we also -- and I know the
4 Commission has given us some guidance in this area, but we
5 also want to look across at the reactor population, too, and
6 make sure that there is some logic to what we're doing vis-
7 a-vis what they're doing in terms of safety goals as well.
8 DR. KRESS: Well, they don't have this overriding
9 principle there either, unfortunately. It's something we
10 called for, but it doesn't exist. I mean, if you looked at
11 the prompt fatality and the latent fatality and the non-
12 existent land contamination and other societal risks,
13 there's no overriding integrating factor for those.
14 DR. VIRGILIO: While we believe at this point
15 starting from the bottom up, working in these areas would be
16 helpful, we all, I think, agree that that's what we need:
17 an overarching principle that would tie this together or a
18 framework that would tie this together so that logically,
19 you could look across the entire scope of our activities and
20 say --
21 DR. KRESS: But each one of them has a --
22 DR. VIRGILIO: It fits. It fits within a
23 framework.
24 DR. GARRICK: Tom, you don't think the qualitative
25 statements that preamble the safety goals are in the

1 category that you're talking about?

2 DR. KRESS: In a sense, when you say small

3 increase over --

4 DR. GARRICK: Yes.

5 DR. KRESS: -- existing risk, that is a type of -

6 -

7 DR. GARRICK: Right.

8 DR. KRESS: -- of thing, but those two are

9 inconsistent, because what happens is only one of the goals,

10 almost 90 percent of the time, controls because they're on

11 an inconsistent basis. They're not tied together in a

12 sense.

13 DR. VIRGILIO: Right .

14 DR. KRESS: For example, why should the safety of

15 nuclear power be tied to automobile accident deaths? I

16 mean, that doesn't make any sense at all to me, and that's

17 basically what it is: it's tied to the automobile accident

18 deaths. But why? There's no reason for that. So there's

19 no real --

20 DR. APOSTOLAKIS: These are policy issues, Tom.

21 Why should there be a reason?

22 DR. KRESS: Because you have to have these

23 acceptance criteria before you can risk-inform, and you've

24 got to start somewhere.

25 DR. APOSTOLAKIS: Yes.

1 DR. KRESS: And if you just pick values out of the
2 air, you're going to end up with an incoherence in the
3 system. You know, it may not be a bad incoherence, because
4 you could look at each group separately but --
5 DR. APOSTOLAKIS: But that will be a societal
6 incoherence.
7 DR. KRESS: It's a societal issue.
8 DR. APOSTOLAKIS: But not the Nuclear Regulatory
9 Commission incoherence.
10 DR. KRESS: Oh, yes, but society is not going to
11 come knocking on your door and say here's what we want. The
12 Nuclear Regulatory Commission has to develop these itself
13 somehow. Nobody is going to come and hand them to you?
14 DR. APOSTOLAKIS: No, but the one-tenth of 1
15 percent is clearly a policy issue.
16 DR. KRESS: Sure.
17 DR. APOSTOLAKIS: And it can be a logical one.
18 DR. KRESS: These are all policy issues.
19 DR. APOSTOLAKIS: Yes.
20 DR. KRESS: But what I'm saying, there's a need
21 for a coherent basis for such policy issues.
22 DR. GARRICK: But the one-tenth of 1 percent could
23 be viewed as an interpretation of what is meant by the
24 qualitative overarching.
25 DR. APOSTOLAKIS: Yes, that's what I'm saying.

1 DR. GARRICK: The goal that -- yes.

2 DR. APOSTOLAKIS: I mean, Tom, you asked what is
3 the reason behind it? Well, there is no reason. There is
4 no logic. I mean, this is it. All we want is these risks
5 from these technologies to be lower.

6 DR. KRESS: But there could be some logic is what
7 I'm saying. That's my problem. And the logic could be
8 we're willing to accept so many deaths, which means so much
9 money and multiplied by money per death for automobiles just
10 because it has certain benefits to society. You can
11 quantify that benefit to some extent.

12 We ought to be able to say what's the benefit of
13 nuclear power to society? And we ought to be able to accept
14 the same costs, that is, the same number of deaths at the
15 same frequency. And that's an overriding principle that
16 just doesn't seem to be evident anywhere in these
17 regulations.

18 DR. APOSTOLAKIS: Well, but then, you would run
19 into other problems.

20 DR. KRESS: Of course you've got the problems, but
21 you --

22 DR. APOSTOLAKIS: The threat element of risk; the
23 catastrophic potential.

24 DR. KRESS: Of course, you've got to -- we've got
25 to think about those things and factor them into your

1 decision in some way.

2 DR. HORNBARGER: Your argument is basically one of

3 risk harmonization in the jargon?

4 DR. KRESS: Yes; that would -- it could be called

5 that, yes.

6 DR. HORNBARGER: I mean, we would prefer to see

7 NRC regulations risk-informed the same way that EPA

8 regulations or Department of Transportation regulations, and

9 they'd all be based on how many, so many thousands of

10 dollars per statistical death.

11 DR. KRESS: Something like that, yes. You know,

12 you need some overriding principle that --

13 DR. APOSTOLAKIS: That's difficult to defend, yes.

14 DR. KRESS: Anyway, it's just a thought.

15 DR. VIRGILIO: John?

16 DR. FLACK: Okay.

17 DR. APOSTOLAKIS: No high-tech for you, huh?

18 [Laughter.]

19 DR. FLACK: Good morning; I am John Flack, the

20 risk task force leader. The risk group in NMSS is a group

21 that acts as a focal point of all risk-informing activities

22 that are going on in the office, and so, I have headed that

23 group up now for the past 3 months, and today, as Marty had

24 mentioned, I plan to cover two areas. One is the training

25 that is being developed for the office to bring them up to

1 speed in using risk concepts, and the second is to provide
2 you with an overview of the feedback from the public
3 workshop in the two areas; the screening criteria that was
4 sent out for distribution as part of the Federal Register
5 notice and the entertainment of potential safety goals for
6 nuclear materials and disposal of nuclear waste.
7 So moving on to the first topic, which is
8 training, as was mentioned earlier by Marty, we plan to use
9 a three-tier approach to train the office on risk, risk
10 concepts. The first year is a management and supervisory
11 level of training program that was really a roll-up from
12 tier two, which is being developed as a pilot, and we expect
13 to exercise that pilot this fiscal year, and I'll go into
14 the outline of what we're following on that pilot program.
15 And then, there's tier three, which is really targeting
16 those that are specialists in risk, who use risk on a day-
17 to-day activity, and some of these courses would be given
18 in-house, and some would be taken through other agencies,
19 and we're developing a list of those courses.
20 There's two things that need to be considered
21 while we're developing the training program, and one is the
22 fact that we also, and NMSS also has regional staff that we
23 need to bring in for training to make sure that it's
24 properly implemented risk concepts, and secondly, we need to
25 think about the agreement states, and one of the issues that

1 you'll see that came out of the workshop is that if we're
2 moving in a risk-informed direction, how do we train those
3 that are out there in the agreement states as well with
4 their limited amount of resources? So these are two things
5 we need to consider during development of the program.
6 Now, with respect to laying out the program for
7 training, I kind of followed the Farman approach. Richard
8 Farman used a concept when he taught students about physics;
9 he said first, you tell them why they need to know it, and
10 then, you tell them what they need to know, and then, you
11 let them determine for themselves how to do it. Well, we do
12 all three here, though. The approach that was laid out was
13 we would go through first explaining why we need to use risk
14 up front; why it's important to use it and why the
15 Commission has considered it to be important and then go
16 into the methodologies: what are the methods that we would
17 use to carry out this concept of using risk? And then,
18 finally, how it's applied through application, specific
19 applications as examples.
20 So that's the kind of thinking that when we laid
21 out the training program.
22 And as you can see, in the why of why we are using
23 risk, it's interesting to note that the first topic of
24 discussion in the introduction of that area is adequate
25 protection and safety goals and why they are different in

1 that regards based on an historical perspective as well as
2 where we're trying to blend the two today; it was
3 interesting to think about in that context; but basically,
4 from where we have been, safety goals, trying to be
5 something we aspire to which involves performance as well as
6 defense-in-depth that has already been instituted at the
7 sites to adequate protection as generally defined in the
8 strategic plan as meeting the bulk of the regulations.
9 So just getting that out as the differences in
10 concepts to the students and how we are trying to blend the
11 to understand one with regards together is something that
12 really should be discussed up front.
13 DR. KRESS: When do you define adequate protection
14 as meeting the bulk of the regulations? And then, you're -
15 - you set out on an activity where you're making a wholesale
16 modification of the regulations? How useful is that
17 definition to you in doing that activity?
18 DR. FLACK: Well, I think -- yes, I think you're
19 touching upon a point of public confidence. I mean, when we
20 have established adequate protection, it's something that we
21 believe that we have done with our regulations and that
22 plants do adequately protect the public. I mean, that's the
23 position that you're coming from up front, and the
24 regulations are trying to establish what that is. I mean,
25 they do establish what that is.

1 But there's also goals that you want to aspire to,
2 and I think this is where you stand back, and you look at
3 the broad set of the regulations and how they're being
4 implemented and what they're achieving and then what are we
5 trying to achieve, well, in steps to safety goal? Well, the
6 safety goal is a way of articulating what we're trying to
7 achieve. It's something that you try to aspire to. And I
8 think in that context, one can, you know, sort of understand
9 what role each of these play.
10 Now, ultimately, it would be the -- ultimately,
11 they should come together. When we have all the answers, I
12 think it will come together. But as this continues to
13 evolve, and we get closer and closer as we evolve, I think
14 we're coming closer and closer together. But I don't know
15 if we have all the answers yet. I mean, we always have to
16 question that, you know. And so, I think that goals
17 shouldn't be met; they should be something that we're saying
18 here's what I'm trying to aspire to. I mean, in some cases,
19 you might meet them, and that's fine, but it's not something
20 that should be in the sense of a requirement, you know, that
21 you have to meet these goals.
22 So again, why? Why do we need risk? We have the
23 PRA policy statement that goes through a number of reasons
24 why we think it's important, the Commission thinks it's
25 important to use risk concepts, and those would be

1 explained, of course, as part of that up front discussion
2 and class. And then, we talk about the strategic plan and
3 what's the relationship between the strategic plan and the
4 risk-informed regulation implementation plan, which you'll
5 soon hear about; this is the one that the staff has been
6 working on and presented to the Commission I guess it was
7 about a month ago.
8 Now, and I visualize the strategic plan again as
9 those strategic goals on top, and then, we have performance
10 goals which we expect to meet, and then, between the two,
11 you need some implementation plan. How do you go from your
12 strategic goals to how you're measuring or what's causing
13 you to measure what you're measuring? And that, to me, I
14 envision that as the piece, the dovetailing of the risk-
15 informed regulation implementation plan.
16 So with that fitting together like that, that
17 would explain why we're -- and risk-informing the plan
18 itself would explain how the policy itself is being
19 implemented, the Commission's PRA policy statement.
20 So I see those two as dovetailing, anyway, in that
21 sense of the word, but we're still working on developing the
22 risk-informed regulation implementation plan and laying that
23 out and how that will -- then, we will get down to the
24 regulatory activities and how those are being risk-informed.
25 So I see that as an introduction to the students

1 as to why we're using risk. And then, we move on to the
2 principles of risk-informed integrated decision making,
3 which is Reg Guide 1.174, where there's a lot of information
4 there that is generic, which is the way we do business using
5 risk, and that carries over certainly to the other fields.
6 And then, as we move through this cost, we begin at a higher
7 level moving down now to its actual applications to
8 materials and waste disposal, and right now, the document
9 that really outlines that is SECY 99-100, which you're
10 familiar with and how we're implementing that process.
11 And then, of course, the connection with respect
12 to nuclear materials and waste of how we use risk and
13 rulemaking, licensing and inspection and assessment as being
14 those three key regulatory areas by which we operate and
15 drawing that connection between -- to risk and the
16 regulations. So again --
17 DR. GARRICK: John, I hope that the emphasis on
18 this, on the training is not so much on the why being
19 answered in the context of because we have rules and
20 regulations and what have you but rather what's behind the
21 reason we have the rules and regulations. I don't think the
22 American public is all that impressed with the why being
23 answered, being given in the context because it's required
24 by the regulations. I'm just suggesting -- and I hope the
25 emphasis is on the merits of a risk-informed approach.

1 DR. FLACK: Yes.

2 DR. GARRICK: The merits of a risk perspective,
3 because this is not very impressive to me just to see this
4 list, because, you know, I don't -- I'm a member of the
5 public; I don't trust the Government. I want something more
6 basic than safety goals and PRA policy statement and
7 strategic plans and regulations and what have you. I want
8 somebody that really understands what we're going to benefit
9 from in taking a risk view here and that understands what
10 risk is. So I hope the emphasis is on that.

11 DR. FLACK: Yes; I would say -- well, I guess
12 there's a couple of things. I understand the emphasis that
13 you're making as certainly important to make. The objective
14 -- this gets back to the objectives of the course, and what
15 I'm laying out is more of an outline with the objective in
16 mind that we want to bring the staff up to speed in risk,
17 and we want the staff to understand why risk is important to
18 use it, why it's important to know, and how does it fit in?
19 So the emphasis was more on the staff itself rather than the
20 public domain. So there is a part that I'll get to in the
21 end about risk communication, and that is how do you
22 communicate to the public.

23 DR. GARRICK: Yes.

24 DR. FLACK: But that comes at the very end of the
25 list, and this is only meant to be the establishment of an

1 outline. I mean, there is a lot of meat that needs to be
2 put on the bones.
3 DR. GARRICK: Yes.
4 DR. FLACK: But it's just the way we're thinking
5 through the process of training the staff in the Office of
6 NMSS --
7 DR. GARRICK: Yes.
8 DR. FLACK: -- to appreciate the views on it.
9 DR. GARRICK: But my point is that the real reason
10 we're doing risk assessment is, A, we want to know what the
11 risk is in a realistic fashion; that it's something more
12 valuable to us than a bounding analysis. That's the real
13 merit of a risk assessment. And number two, we want to know
14 what's contributing to the risk.
15 DR. FLACK: Yes, absolutely.
16 DR. GARRICK: And so that we can do something
17 about it.
18 DR. FLACK: Yes.
19 DR. GARRICK: So that we can manage it. And when
20 I see a list like that, I don't see --
21 DR. FLACK: Well, I get into the other pieces.
22 DR. GARRICK: Yes.
23 DR. FLACK: This is still at a very high level.
24 DR. GARRICK: Right; I understand.
25 DR. FLACK: And now, we get into the next piece.

1 Let me move ahead to the methodologies and then what comes
2 out of those methodologies and then how do we use those
3 findings.
4 DR. GARRICK: Yes.
5 DR. FLACK: So this is still establishing the up
6 front why risk is -- why we're using risk, and certainly,
7 the outputs and the outcomes of using risk is something
8 that's important.
9 DR. GARRICK: Yes.
10 DR. FLACK: You know, that adds to what our
11 knowledge base is, and really, that's the main thrust.
12 DR. APOSTOLAKIS: But why we're using risk; I
13 think part of what John said answers that question in the
14 motivation behind it so it belongs here really, doesn't it?
15 That you really want to avoid -- to get away from
16 conservative bounding analysis, a more realistic view of
17 what's going on. Maybe that should be the very first
18 bullet, even above the safety goals.
19 DR. FLACK: Well, yes, I mean, you discussed that
20 in the context of goals and adequate protection and --
21 DR. APOSTOLAKIS: You can even bring it up there,
22 yes.
23 DR. FLACK: I mean, that's really -- you know --
24 DR. APOSTOLAKIS: Oh, so you were planning to do
25 that --

1 DR. FLACK: Yes.

2 DR. APOSTOLAKIS: Yes.

3 DR. FLACK: That would be part of what we mean by

4 adequate protection versus --

5 DR. APOSTOLAKIS: I see.

6 DR. FLACK: -- a safety goal.

7 DR. GARRICK: Well, yes, if you do a job of

8 marrying this list and its language to the background, like

9 you said, you said when you were talking about safety goals

10 versus adequate protection that there's language in the

11 rules and regulations of a background of the type that we're

12 talking about here. But just wanted to make the point that

13 that's quite important, that background information.

14 DR. FLACK: Yes; and I think when you flesh out

15 why, you know, you have a PRA policy statement to begin with

16 and the reasons that led you there --

17 DR. GARRICK: Right.

18 DR. FLACK: -- were some of the reasons that

19 you're describing now. So, I mean, there needs to be a lot

20 more, again, meat on the bones here, but just as a

21 structure, you're quite right. I mean, these things have to

22 be brought up. I think that one of the shortcomings that I

23 see is that we tend to jump into teaching students the tools

24 and the methods, and you say okay, now, go forth and use

25 them, but there's not enough up front discussion of why do

1 you use risk? What is risk, you know, doing for you, and I
2 think these are the kinds of, you know, things that need to
3 be discussed; right.
4 Okay; which gets me to the second part, and that's
5 the what, and that is, you know, as part of that -- part of
6 the course; it's to go through also the methodologies and
7 what are the -- what they are, the concepts, the methods.
8 And through that discussion, of course, of what risk is and
9 then the general methodology that's used in finding out what
10 that risk is and then the key modeling areas, and these
11 configuration or with reactors, of course, it's as built, as
12 operated plant or operating condition and what we mean by
13 success and how that's modeled. Of course, human
14 reliability is an important part of that methodology and
15 common cost failure, accident progression and consequence
16 analysis and external events. So these are all the key
17 modeling areas that one would discuss in a course like this
18 to get ideas to students on how or what is, you know, this
19 is the what, what modeling areas there are out there that
20 need to be done.
21 And then, following that, of course, then, we get
22 over to the data, statistical analysis and treatment of
23 data, and there will be some of that as part of the course;
24 basic treatment of uncertainties, and this, of course, is
25 trying some limitations of the methods. So this would be in

1 that context of getting out the methods, explaining to the
2 students what methods are out there and how they're going to
3 be applied will then follow.
4 DR. KRESS: Go ahead, George.
5 DR. APOSTOLAKIS: The uncertainty treatment in the
6 statistical analysis, the biggest uncertainties, at least in
7 reactors, are usually associated with models themselves, not
8 the data failure rate kind of thing. Is that part of what
9 you're going to discuss here, even though there are no
10 methods really for handling those, but the model
11 uncertainties really drive the whole thing. And I think a
12 lot of staff's regulations come from that.
13 DR. FLACK: Well that clearly, I mean, this is --
14 the assumptions that go into even the model need to be
15 articulated well.
16 DR. APOSTOLAKIS: Right.
17 DR. FLACK: How you deal with that, it's helps to
18 understand that in the context of the limitations of the
19 process, that one is dealing with what we believe to cover
20 the -- what the model is expected to cover based on the
21 assumptions that go into the model, and certainly, that
22 comes out; that would need to be discussed in the context of
23 uncertainties.
24 So once that groundwork is established, then, it
25 becomes more the data uncertainties that we're talking

1 about, but both uncertainties play an important role. You
2 know, I tend to agree with you. I think that's one of the
3 reasons why, you know, we're more in a risk-informed
4 arena --
5 DR. APOSTOLAKIS: Yes.
6 DR. FLACK: Because of that, you know.
7 DR. APOSTOLAKIS: That's right.
8 DR. FLACK: And it's really to open your eyes to
9 look for these things and not to say you got them all, I
10 think, is -- you know -- is the answer to that but -- okay;
11 so, moving off from the methods, we get to the applications.
12 And here's where I relied on my team members to actually
13 provide us with a lot of input to this, so we've met with
14 the training instructors, and we have identified some
15 specific applications, and now, we're into how do you use
16 these methods?
17 And those are, you know, the four that we have
18 established is fuel fabrication, one for fuel fabrication,
19 one for transportation, one for nuclear materials and by-
20 products, which you'll hear something about today, and
21 radiological waste disposal. So each of these, essentially,
22 has their own methodology. So we've developed sample
23 applications of that and turned those over to the
24 contractors, and now, the team members, each team member has
25 a domain that they'll be interacting with the instructors on

1 so at least the students who take this course see the
2 practical applications of these methods as we're using them
3 today in the NRC.
4 Each of the examples that have been developed for
5 those particular areas, of course, need to address certain
6 elements, and of course, one is the differences in
7 methodology; each has its own methodology, as mentioned; the
8 key assumptions, which gets back to the modeling question;
9 data analysis; the results and findings; what comes out of
10 that analysis; and then, how do you use those findings or
11 insights in decision making? So trying to get out already
12 what's going on more globally within the office is really
13 the intent of that, of those applications.
14 Okay; that's sort of the how.
15 DR. MARKLEY: John, just one question. In your
16 developing an appreciation for the staff for the use of risk
17 information and the analysis methods, are you going to be
18 developing something comparable to the senior reactor
19 analyst, where you have people in the various areas that
20 will be more or less responsible for doing some of the
21 analysis associated with it along those lines to support
22 those activities in the field and stuff?
23 DR. FLACK: Well, we haven't gotten -- we really
24 haven't gone that far yet. We're thinking about -- if we're
25 talking about significant determination processes and

1 specific findings and how they're assessed, I believe that's
2 an area that we still need to pursue. So we don't have, per
3 se, like SRA types within NMSS. We have a group, though,
4 and certainly, as things get more interesting and get
5 brought in, what is the risk perspective of this, then, the
6 group would take it more or less on, and then, the expertise
7 within the group would deal with the issue. But there is
8 not an assignment or a specific individual assigned like a
9 similar --
10 DR. MARKLEY: But the group is a group of risk
11 analysts, per se, or are they people with experience in
12 those technical areas?
13 DR. FLACK: Both.
14 DR. MARKLEY: Both?
15 DR. FLACK: Yes.
16 DR. GARRICK: John, there is one thing that always
17 bothers me about training syllabi that I see in the risk
18 field, and they don't somehow match up very well with the
19 real world in terms of activities. I look at your examples
20 on your previous slides of methodology and application, key
21 assumptions, data analysis, results and findings, insights
22 and use and decision making. The most important activity in
23 a risk assessment is what I would call the building the
24 logic models, answering the question what can go wrong?
25 It's probably 70 percent of the risk assessment,

1 and yet, there is a kind of this idea conveyed out here that
2 a risk assessment is primarily analysis of data. That may
3 be 5 percent of a risk assessment. The thing that's really
4 the tough, hard-nosed stuff in doing a comprehensive risk
5 assessment is not clearly identified in that kind of a list.
6 Now, it could be buried in the notion of methodology and
7 application, but where the man-hours are really spent, and I
8 speak to you from having directed over 40 of nuclear power
9 plant PRAs, is in developing the logic models, the event
10 sequence diagrams and the fault trees that answers the
11 question what can go wrong?
12 And that's where the real value of the risk
13 assessment comes from; you know, people say that you can't
14 do a risk assessment if you can't do data, if you don't have
15 data, and of course, that's complete nonsense.
16 DR. FLACK: Right.
17 DR. GARRICK: Because that's not where the energy
18 is consumed. The energy is consumed in understanding how
19 the plant works.
20 DR. FLACK: Yes, right.
21 DR. GARRICK: And you understand how the plant
22 works when you start answering the question what can go
23 wrong, and the way you answer that question is through a
24 structured set of scenarios.
25 DR. FLACK: Yes.

1 DR. GARRICK: And somehow, that just doesn't come
2 through.
3 DR. FLACK: Yes; no, I --
4 DR. GARRICK: And that's where the whole
5 brilliance of a good risk assessment is.
6 DR. FLACK: Right, exactly, right, right.
7 DR. GARRICK: If you don't have people who
8 understand how the plant works but might be the world's
9 expert on data analysis; might be the world's expert on
10 methodology and so forth, you're going to get a lousy PRA.
11 DR. FLACK: I couldn't agree with you more.
12 There's always limitations in a course like this.
13 DR. GARRICK: Yes; I know, but I just couldn't
14 resist it because --
15 DR. FLACK: Yes; I --
16 DR. GARRICK: Because there is --
17 DR. APOSTOLAKIS: I count this as something else.
18 DR. GARRICK: Yes.
19 DR. APOSTOLAKIS: If you have people who know the
20 plants very well, and they don't understand data analysis
21 and methodology --
22 DR. GARRICK: Well, I know, I know. I know,
23 George, but that's there; that's there.
24 [Laughter.]
25 DR. APOSTOLAKIS: You know, just for the record.

1 [Laughter.]

2 DR. GARRICK: That's represented. But the real

3 hard work of a PRA does not seem to be represented.

4 DR. FLACK: Yes.

5 DR. GARRICK: That's my point.

6 DR. FLACK: It's hard to get that appreciation

7 from someone just quickly going through one of these

8 examples, and certainly, these examples that are presented

9 take an enormous amount of time. I mean, there's a lot of

10 resources that went into these, and in a couple of pages,

11 you present that to them.

12 DR. GARRICK: I understand; I understand.

13 DR. FLACK: So it's just the fact that the people,

14 to really appreciate it, need to do it.

15 DR. GARRICK: Yes.

16 DR. FLACK: And when they do it, they'll

17 understand it, but it's to get them there. The whole idea

18 is to get them there.

19 DR. GARRICK: John, my main point is that a PRA is

20 principally an engineering analysis problem. It's

21 principally an engineering and operations analysis. And

22 that is something that has to be emphasized in the training.

23 DR. FLACK: Yes; I agree.

24 DR. APOSTOLAKIS: Maybe under examples to include,

25 there ought to be a bullet that actually addresses that.

1 You know, I don't know how to put that --

2 DR. GARRICK: Well, the closest thing I know --

3 right; the closest thing I know, George, is something like

4 logic modeling.

5 DR. APOSTOLAKIS: Yes.

6 DR. GARRICK: It's something that really gets --

7 gets it.

8 DR. APOSTOLAKIS: Structuring the scenarios?

9 DR. GARRICK: Yes; structuring the scenarios.

10 DR. APOSTOLAKIS: I think that would be a good

11 addition.

12 DR. GARRICK: Structuring the scenarios.

13 DR. FLACK: We're just writing it as methodology.

14 DR. GARRICK: Yes.

15 DR. FLACK: Structuring and scenarios.

16 DR. GARRICK: Well, structuring the scenarios.

17 DR. FLACK: Structuring of scenarios.

18 DR. APOSTOLAKIS: Do you want to call them failure

19 scenarios or --

20 DR. GARRICK: Well I --

21 DR. APOSTOLAKIS: Because it's not really -- we

22 call them accident reactors.

23 DR. FLACK: Yes; I understand.

24 DR. APOSTOLAKIS: That's the word that applies to

25 NMSS, the scenarios.

1 DR. GARRICK: Scenario is okay.

2 DR. APOSTOLAKIS: Scenarios.

3 DR. GARRICK: Because that --

4 DR. FLACK: They will certainly cover that as part
5 of the -- you know, like, for example, the event reanalysis,
6 but again, the appreciation of actually doing it in the real
7 world is -- you just can't get that across in the classroom.
8 You have to summarize it, you know.

9 DR. GARRICK: Yes.

10 DR. FLACK: But certainly, we'll reemphasize that
11 as another bullet.

12 DR. APOSTOLAKIS: Good point.

13 DR. FLACK: Okay; so, then, that leaves us with
14 the last two areas of the training program, which would be
15 the application of the risk insights to regulatory decision
16 making, but it's not just generating things and not being
17 used. And here, also using the tool once it has been
18 developed to gain insights by performing sensitivity studies
19 and bounding analysis, and that gives you more information
20 about -- about whatever you're modeling the area; the impact
21 of uncertainties through those sensitivity studies, and some
22 of this last one, performance measures, is something that
23 you would gain by doing an analysis and understanding what
24 are the important measures, important performance measures
25 to capture and then use, for example, to demonstrate that,

1 in fact, you are achieving what the model is predicting,
2 something that you could actually measure in the course of
3 time.
4 DR. KRESS: Somewhere in these six areas, you have
5 a concept of how defense-in-depth fits in with a risk-
6 informed or risk application processes?
7 DR. FLACK: Well, other than how it would be
8 discussed in the context of 1.174 up front, you know, what
9 we -- you know, how it becomes one of the elements,
10 principles of good regulation, I wasn't going to go venture
11 into what we mean by that in the context, you know, of the
12 applications at risk.
13 DR. APOSTOLAKIS: You know, John, when you talk
14 about uncertainties and their impact on decision making,
15 maybe that's a good place to --
16 DR. KRESS: That would seem to me like the right
17 place to put it, yes.
18 DR. APOSTOLAKIS: Especially model uncertainties,
19 because if you think about the, you know, motivation for
20 defense-in-depth, compensatory measures is really the
21 uncertainty you have. Now, again, you don't need to give
22 them a whole treatise on it, but you have an item here
23 insights and use in decision making, for example. That's
24 where a discussion of defense-in-depth versus the rational
25 approach to designing compensatory measures would belong. I

1 mean, just as a thought. I mean, you don't have to decide
2 now, but it's certainly an important issue.
3 DR. FLACK: Oh, it is, but the question is can it
4 be confusing within that context?
5 DR. APOSTOLAKIS: It is already confusing.
6 [Laughter.]
7 DR. FLACK: Well, this is true, but it should be
8 something that's borne out. It's -- there's almost you're
9 working like between two worlds, one of being --
10 DR. APOSTOLAKIS: Exactly.
11 DR. FLACK: -- deterministic and one of being
12 probabilistic, and then, you're trying to bring the two
13 together to have it make sense within the principles of
14 1.174, and the question is how does one articulate that in
15 the context of a training course? A lot depends on the
16 instructor, and it's not going to be me, which is
17 unfortunate. Otherwise, maybe I could discuss this with --
18 you know, the problems and the issues that come out of how
19 we deal with these as things we're trying to blend the two.
20 But I guess in concept, what we're trying to
21 achieve -- establishing defense-in-depth mechanisms to
22 account for uncertainties, which is why you wouldn't want to
23 remove the containment, for example -- certainly is an
24 appropriate thing to talk about in the context of the
25 course.

1 DR. APOSTOLAKIS: The -- well, again, I mean,
2 1.174 is a pioneering document, but the way defense-in-
3 depth is presented there is a third principle; the
4 connection between defense-in-depth and risk assessment is
5 not very clear.
6 DR. FLACK: Right.
7 DR. APOSTOLAKIS: And it's okay; I mean, that was
8 the first time we wrote something like that. But I think a
9 discussion of defense-in-depth in the context of the
10 uncertainties that will come out of all of these analyses
11 would be a more reasonable thing to do and explain at least
12 the connection --
13 DR. FLACK: Yes.
14 DR. APOSTOLAKIS: -- that --
15 DR. FLACK: And there is a structure to it, you
16 know, I think. You know, as you become -- of course, as you
17 go down further and further in the likelihood of events, you
18 would have less and less defense-in-depth because of the low
19 probability of the event, where events that you would expect
20 that would occur, you would expect a lot of defense-in-
21 depth, and that would still bring you down to this low
22 probability. So, I mean, they kind of trade off against one
23 another. As a reactor tripped, there's a lot of defense-
24 in-depth to bring the plant to a safe shutdown. Of course,
25 in the extreme, there is no defense-in-depth for a

1 meteorite, for example; I mean, it just happens; that's it.
2 So, I mean, in between, you have the whole
3 spectrum of --
4 DR. APOSTOLAKIS: Yes; we are not saying that
5 these issues are crystal-clear to everyone, but at least the
6 discussion of defense-in-depth --
7 DR. FLACK: Sure.
8 DR. APOSTOLAKIS: -- of the context of the
9 uncertainties and their impacts on decision making, and that
10 will naturally bring you back to the model uncertainty
11 issue, because that's a major driver. I don't think there
12 is any defense-in-depth measure that was placed there
13 because the distribution of lambda was too broad, the
14 failure rate. I mean, it's really the model itself that you
15 worry about.
16 DR. FLACK: Yes; good point; okay.
17 DR. APOSTOLAKIS: And that's where, in fact, I
18 would agree with John. I mean, that's where the
19 availability of methodologists has actually done a
20 disservice to the community; because there is so much
21 statistical literature on how to handle failure rates, we
22 can pay a lot of attention to that, when, in fact, from the
23 PRA perspective, they are not the major drivers.
24 DR. FLACK: Yes.
25 DR. APOSTOLAKIS: Uncertainties in failure rates

1 are not the major drivers, right?

2 DR. FLACK: Yes; well, you tend to go to the area

3 where it's the easiest to --

4 DR. APOSTOLAKIS: At the moment you assume it's

5 exponential, you have already made a big assumption.

6 DR. FLACK: That's -- okay; good, and the last one

7 is, of course, risk communication. We were discussing how

8 it is important to communicate the results, both internally

9 and externally, and there is work obviously still going on

10 in that arena right now, and we don't have all of the

11 answers to it but to at least emphasize the need to do this

12 as part of this course.

13 Okay; so, those were the six areas of the pilot

14 program. Then, if there are no further questions, I'll move

15 on to the workshop.

16 DR. APOSTOLAKIS: Let me -- risk communication; I

17 know it's a fashionable term. Shouldn't it really be

18 replaced by building trust or something? That's really what

19 you want. You want the public to trust you, not just to

20 communicate -- the risk communication is part of it. And

21 I'll give you an example. In talking to people or laymen,

22 they have no idea how you guys develop regulations and the

23 extensive reviews and the public comment period and so on.

24 And it seems to me that their confidence in the agency goes

25 up after they realize how much scrutiny every document you

1 produce goes through, and that's not part of risk
2 communication. That's building trust.
3 So I was wondering whether we can start talking
4 about trust, of which risk communication is a very important
5 part but not just risk communication. I mean, you have
6 processes in place that really the general public are not
7 aware -- they are not aware of. And yet, they enhance --
8 they should enhance the confidence they have in you. They
9 don't know that this committee exists and that, you know,
10 everything is aired in public, and we are free to say
11 whatever we like, and the public is free to come and
12 participate.
13 DR. FLACK: Yes, right.
14 DR. APOSTOLAKIS: I mean, that's important.
15 DR. FLACK: Yes; yes, well, this really gets into
16 external communication in general; I mean, how we
17 communicate to the public.
18 DR. APOSTOLAKIS: Yes; so, in fact, the thing you
19 have in parentheses there, public confidence --
20 DR. FLACK: Yes.
21 DR. APOSTOLAKIS: -- it seems to me that should be
22 the heading.
23 DR. FLACK: Instead of risk communication.
24 DR. APOSTOLAKIS: And risk communication is under
25 it.

1 DR. FLACK: Well, okay, but we also have internal
2 communication.
3 DR. APOSTOLAKIS: Yes; that's true.
4 DR. FLACK: Which is important too.
5 DR. APOSTOLAKIS: Internally, you don't have to -
6 - they know what the processes are; I mean, all you have to
7 do is communicate risk.
8 DR. HORNBARGER: You hope they already know.
9 [Laughter.]
10 DR. APOSTOLAKIS: All the evidence to the
11 contrary, you know; 70 percent of you guys don't think risk-
12 informed regulation will go anywhere. That's still true.
13 DR. KRESS: Who took that poll?
14 DR. APOSTOLAKIS: Was it the IG or someone?
15 DR. KRESS: IG?
16 DR. APOSTOLAKIS: Do you remember?
17 DR. FLACK: Yes; well, in light of that I was
18 thinking of how the information gets -- that's being used
19 again; the risk group is a support group, and it's generally
20 supporting a technical area. Well, how do you package the
21 results from your risk studies so that the technical area
22 can use that, capitalize on it? Some of the things that
23 John had been mentioning has to somehow get across to the
24 people that are going to use this to make the decisions.
25 That generally will not be the risk analyst that makes the

1 decision. It will be someone in the technical area.
2 So that bullet was intended to somehow get -- to
3 get the output from this analysis in a form that is usable
4 and will be used by somebody making those technical
5 decisions.
6 DR. GARRICK: Also, it's a risk course, so I can
7 understand why you would put communication or risk
8 communication as a headline, even though I agree with what
9 George is saying, that what we're really talking about here
10 is how to build public confidence.
11 DR. FLACK: Yes, clearly.
12 DR. GARRICK: How to build trust.
13 DR. FLACK: That second bullet is getting to the
14 public that we're using risk. We're doing regulation in a
15 smart way, and one of the things we're using is risk to do
16 it and getting that point across to the public. I mean --
17 well, as we'll get into the workshop, you'll hear some of
18 these public groups think risk is just the opposite; that
19 it's a means for relaxing the regulation. And so, there's
20 always this other element that's there that --
21 DR. APOSTOLAKIS: And if you talk to the industry,
22 it's the other way.
23 DR. FLACK: That's right; so it's -- there's
24 always sort of a problem with that, too.
25 DR. GARRICK: Let's talk about that workshop.

1 DR. FLACK: Okay; moving on to the workshop, the
2 workshop was held last week, April 25 and 26. There were
3 approximately 50 people who showed up at the workshop.
4 There were about 26 participants around the large table.
5 The objectives of the workshop were to both inform and
6 obtain stakeholders' input on two things. One was the
7 criteria, which Marty had mentioned this morning, earlier
8 this morning on how to decide whether a certain regulatory
9 activity should be risk-informed, and the other was on the
10 nuclear safety goals.
11 As part of the Federal Register notice that went
12 out, we provided the five-step implementation process out of
13 SECY 99-100. We also listed the criteria, proposed
14 criteria, and then, we listed a number of questions that we
15 thought as food for thought that they would have behind
16 their minds as they participated in the workshop. And I
17 kind of structured the feedback along those questions we had
18 asked.
19 This view graph just provides an overview of the
20 organizations that were represented, which gives a pretty
21 broad spectrum of participants. Again, there was
22 approximately 20 to 25 that sat around the table that
23 participated in the discussion. The next view graph shows
24 the framework that was outlined in SECY 99-100; the five-
25 step process. The first was to identify candidate

1 regulatory applications that are amenable to expanded use of
2 risk assessment information, and we primarily focused on
3 that one. The others kind of flow from that: decide how to
4 modify regulation -- the regulatory activity, and we'll
5 discuss a little about case studies that are being proposed
6 on how do we do that, use that to decide how regulation
7 might be modified.
8 And then, once we ran a pilot, we would then think
9 about changing the regulation and then implementing that new
10 regulation and then what it would take as far as tools to
11 make that happen. But I don't see these five steps as
12 naturally occurring one after the other. There's a lot of
13 feedback from, you know, what you do depends also on what
14 tools you have and that sort of thing, so kind of -- there's
15 a lot of feedback between the various steps, but we
16 primarily, as part of the workshop, focused on number one.
17 The next view graph paraphrases the screening
18 criteria, and those -- that was three, three items on that.
19 So if we were proposing a risk-informed activity, a new
20 activity that would change the way we do business; the first
21 one would say the new regulations should be at least -- it
22 would have to at least address one of these: maintaining or
23 improving safety; improving the effectiveness or the
24 efficiency of the NRC process; and/or reduce unnecessary
25 burden.

1 DR. APOSTOLAKIS: Now, the moment you say reduce
2 unnecessary burden, shouldn't you add a fourth item, add
3 regulations where appropriate?
4 DR. FLACK: Add regulations --
5 DR. APOSTOLAKIS: Well, I mean, the risk analysis
6 may indicate that there are areas where you need more.
7 DR. FLACK: Oh, well, I --
8 DR. APOSTOLAKIS: Because this, you know,
9 regarding communication with the public, I mean, we're
10 overdoing it with the reduction of, you know, unnecessary
11 burden, and, I mean, that's not the purpose why we're doing
12 all this.
13 DR. FLACK: Right. I see the first bullet and the
14 third bullet working together, you might say. When you
15 bring them together like that, you kind of say we're doing
16 smart regulations. If it results in a decrease; that's
17 fine. If it results in an increase, that's fine. We're
18 just doing it the smartest way we know how to do it.
19 DR. APOSTOLAKIS: But what you just said is great,
20 but it doesn't come across.
21 DR. FLACK: Yes, it --
22 DR. APOSTOLAKIS: So, if you decide to put a
23 bullet reduce unnecessary burden, it seems to me you have to
24 have something also that says that you may add something if
25 you find there is a hole someplace or just delete it.

1 DR. FLACK: But the question is if we add that as
2 a bullet, if we say, well, it meets that bullet, that bullet
3 is linked to one of the other bullets. It's not by itself a
4 bullet. Like you would say I would add a regulation, but it
5 would need to either reduce burden or improve safety or
6 something like that.
7 DR. APOSTOLAKIS: Something like that, yes.
8 DR. FLACK: Right; I mean it's --
9 DR. APOSTOLAKIS: I would make it one bullet;
10 you're right.
11 DR. FLACK: So we would have to sort of implicitly
12 be that and one of the others.
13 DR. APOSTOLAKIS: The reason why I'm saying this
14 is I don't really think it affects the substance of things,
15 but the last three or four years, we've been talking a lot
16 about reducing unnecessary burden, and the agency has been
17 criticized that the reason why we're doing all this is to
18 reduce burden, and that's not true. That's not true.
19 DR. GARRICK: It's a by-product of the process.
20 DR. APOSTOLAKIS: It's a by-product, and for 20
21 years, we've been using PRAs to add regulations.
22 DR. FLACK: Well, that's --
23 DR. APOSTOLAKIS: And, of course, people
24 conveniently forget that.
25 DR. FLACK: That's right, and I think it's only

1 saying, well, at this point, I'm going to go back and look.
2 We haven't taken anything; we've kept adding and adding, and
3 maybe there's things that got superseded and something that
4 could be -- and so, it's really a -- well, we went through
5 this phase, then, to -- let's look at it from a different
6 perspective. What is out there that we can reduce; since
7 we've been adding and adding and adding over the years, is
8 there anything now that's not just worthwhile going and
9 implementing?
10 And now, I think we're coming back to the point as
11 though we're doing it as a group thing. When we look at
12 something, we look to see if there's -- safety can be
13 improved or we can reduce, and I think they come together
14 now at this point. We're not looking at one or the other;
15 we're looking at both simultaneously.
16 DR. HORNBARGER: In fact, that strikes me that
17 your first bullet there is essential. It's not one or more
18 of the following; the first always has to be satisfied.
19 DR. APOSTOLAKIS: Right, and the second, too.
20 DR. MARKLEY: George, I think as long as you're
21 relying on licensees to identify the initiatives, you're
22 going to end up with burden reductions and not increased
23 regulations or enhancements.
24 DR. APOSTOLAKIS: But, Mike, I'm not questioning
25 the actual practice. I know that we're trying to do the

1 right thing, and we are most of the time. I'm just
2 addressing what's written there.
3 DR. MARKLEY: Right.
4 DR. APOSTOLAKIS: And because of the recent
5 criticism, I mean, I have no -- there's no question in my
6 mind that we are not doing this just to reduce burden, but
7 we have been criticized that we are overdoing it with the
8 reduction, and we keep talking about it all the time, so
9 either delete it or add something to the effect that if
10 necessarily, you know, we will add something. We will add
11 unnecessary burden.
12 [Laughter.]
13 DR. HORNBARGER: No, no, you make it completely
14 parallel, and the fourth one is add necessary burden.
15 DR. APOSTOLAKIS: Right, right, right; that's
16 exactly it.
17 DR. FLACK: Add necessary burden.
18 DR. APOSTOLAKIS: Yes.
19 DR. FLACK: And I think the point is well taken,
20 as you'll see in some of these comments back from the
21 workshop -- well, one of the public citizen groups felt that
22 the last two of these criteria should not be part of it.
23 DR. APOSTOLAKIS: That's right.
24 DR. FLACK: They only believe that the first one
25 should be part of it. And that was their position.

1 Obviously, that wasn't shared by everyone in the room, but
2 that's where they were coming from. But we'll take that --
3 you know, we'll think about that, what you said, and see if
4 we can change -- see what we can do to clarify the meaning
5 of that first --
6 DR. APOSTOLAKIS: Okay.
7 DR. FLACK: -- first criterion.
8 The other two, of course, are that there needs to
9 be data and analytical methods available or able to be
10 developed if you want to make that change work, and then, of
11 course, it's the implementation, whether it can be realized
12 at a reasonable cost. Again, this looks almost like the
13 why, what, how, whether you start with the why are you doing
14 it and then what, what it is that you plan to do and then
15 how are you going to do it; it sort of flows in the same
16 kind of logic.
17 So that was the criteria that was proposed, and
18 there is a comment period that's still open, and we're still
19 waiting to hear from others on that as well. I don't know
20 if we'll get --
21 DR. APOSTOLAKIS: Well, again, in the context of
22 the criteria, though, I don't know what it means maintaining
23 or improving safety. The criteria are -- will tell you
24 whether you should risk-inform a particular activity, right?
25 That's what Virgilio told us earlier. The screening

criteria; what's the purpose of the screening criteria? To decide --

DR. FLACK: To see if -- yes, to see if there is an area of the regulation that could be risk-informed and then why would you --

DR. APOSTOLAKIS: How can maintaining safety be part of the criteria? I don't see that, and, you know, I just don't see that.

DR. FLACK: It could be part -- well, okay.

DR. APOSTOLAKIS: I mean, that's a consideration when you decide to do something, and you're asking yourself now, what should I do? Well, then, you say of course, whatever I do, I have to maintain safety. But it is -- or improve it, but it's not part of the screening criteria, I don't think.

DR. FLACK: Well, it almost says that if, you know, it goes hand-in-glove with the last bullet, which says that if you have a proposal that you wish to reduce burden that you would at least maintain safety while doing that or improving safety, but that would be a win-win situation.

DR. APOSTOLAKIS: Right; but this is a consideration after you decide that there is unnecessary burden.

DR. FLACK: That's right; you would first decide that -- yes.

1 DR. APOSTOLAKIS: It's after that.

2 DR. FLACK: Yes; you would first observe that.

3 DR. APOSTOLAKIS: Your first decision, the

4 maintenance of safety really is irrelevant.

5 DR. FLACK: Yes; it's almost like an overarching

6 kind of principle that --

7 DR. APOSTOLAKIS: Yes; we always want to maintain

8 safety.

9 DR. FLACK: Yes, right.

10 DR. APOSTOLAKIS: There's no question about it.

11 DR. KRESS: A criterion might be does this

12 particular regulation have a high risk or a high impact on

13 safety. That could be a criterion.

14 DR. APOSTOLAKIS: This regulation; no, you're

15 looking at activities, right?

16 DR. FLACK: Activity.

17 DR. APOSTOLAKIS: And you're asking yourself

18 should I risk-inform this part of -- the regulation of this

19 activity.

20 DR. KRESS: Yes; then, you're going to -- you're

21 going to risk-inform all the activities.

22 DR. APOSTOLAKIS: Yes.

23 DR. KRESS: The question is which parts of the

24 regulations? And you look at the individual regulations and

25 say does this have a high impact on safety, a high impact on

1 the safety of this particular area? That could be a
2 criterion.
3 DR. APOSTOLAKIS: Why would that be a criterion
4 for risk-informing it?
5 DR. KRESS: Well, if you have to -- if it was low-
6 impact, there's not much reason to risk-inform it, maybe.
7 Yes?
8 DR. ROSENBERG: Hi; I'm Stacy Rosenberg. I'm in
9 the risk task force. The first criterion is to resolve a
10 question with respect to maintaining or improving safety, so
11 that's what we're looking at is if there is a question --
12 DR. APOSTOLAKIS: Oh.
13 DR. ROSENBERG: -- with respect to maintaining or
14 improving safety, we would want to use a risk-informed
15 approach to try to answer the question.
16 DR. APOSTOLAKIS: Then it should be restated here
17 to make that clear.
18 DR. ROSENBERG: That's just paraphrased from
19 the --
20 DR. APOSTOLAKIS: In other words, there is an
21 issue that has come up --
22 DR. ROSENBERG: Exactly.
23 DR. APOSTOLAKIS: -- that creates a question --
24 DR. ROSENBERG: Right.
25 DR. APOSTOLAKIS: -- whether safety is maintained,

1 and then, that can be -- and the thought is that by risk-
2 informing the process, you will be able to place that issue
3 in perspective and maybe resolve it.
4 DR. ROSENBERG: Right, right.
5 DR. APOSTOLAKIS: Oh, okay, yes.
6 DR. GARRICK: But isn't this just parroting the
7 background information to the PRA policy statement? These
8 words have appeared many, many, many times and in this
9 order, too: maintain safety; make the NRC more efficient;
10 and reduce licensing burden if it can be justified.
11 DR. APOSTOLAKIS: But, John --
12 DR. GARRICK: Yes.
13 DR. APOSTOLAKIS: -- they are used there after you
14 decide to risk-inform the regulations. The Commission is
15 telling you do these things; risk-inform the regulations,
16 and in the process, make sure you are maintaining safety and
17 so on. But here, they're deciding whether to risk-inform.
18 And that's why I raised the question, but after the
19 clarification, I think if you change the words, then, it's
20 okay.
21 DR. FLACK: Yes; that should have been the
22 question up front.
23 DR. APOSTOLAKIS: Yes, that is the question.
24 DR. FLACK: That's on the table that you were
25 going to address.

1 DR. APOSTOLAKIS: Makes sense.

2 DR. FLACK: And then, you would just bring the
3 fourth as a question. Of course, it's also being exercised
4 in the other arena as well as part of the policy statement.

5 DR. KRESS: Yes.

6 DR. APOSTOLAKIS: The other thing is the data. I
7 don't know if you like that, John. I mean, if we don't have
8 data, we don't do risk assessment.

9 DR. KRESS: Similar to your question, George, the
10 second one there: improve the effectiveness of -- you know,
11 that's a weird criterion in a sense that almost anytime you
12 risk-inform the regulations, it's probably going to improve
13 efficiency. The criterion ought to be maybe does this area
14 have a high impact on the --

15 DR. APOSTOLAKIS: Yes.

16 DR. KRESS: -- effectiveness or efficiency or
17 something like that. And it seems like improve is not the
18 right criterion.

19 DR. APOSTOLAKIS: Well, I think the words were
20 borrowed from --

21 DR. KRESS: Yes, I think the --

22 DR. APOSTOLAKIS: -- documents that John Garrick
23 mentioned without really adapting them to the fact that you
24 are talking about screening criteria here, whether to risk-
25 inform or not. And the context they have been used in the

1 past is after you decide to risk-inform, make sure these
2 things are right.
3 But number two, I mean, why would that be a
4 consideration in the screening criteria if the principle is
5 -- and that's why we have fault trees; that's why we have
6 all of these things. If you don't have data, you go deeper
7 and deeper until you get some evidence that will be used,
8 and the availability of data was an issue in 1970 when
9 people were telling other people that the reactor safety
10 study would never be completed, because you don't have the
11 data. And then, it was completed. So I don't know that
12 number two means anything. That's why we do risk
13 assessments, right?
14 DR. GARRICK: Yes; I don't have too much problem
15 with it when it's in the context of analytical methods, when
16 it's data and analytical methods. You know, the analytical
17 methods are what allow us to turn up the microscope on the
18 system such that we can see it down to a level of where some
19 evidence, some data exists. So it doesn't have the same
20 impact as it would be if -- as a statement that you often
21 hear, namely, you can't do a risk assessment because you
22 don't have the data.
23 DR. APOSTOLAKIS: That's right; that's right. We
24 need data.
25 DR. FLACK: In the context of whether or not data

1 becomes important as part of your decision, if you need to
2 collect additional data.
3 DR. APOSTOLAKIS: They're always important.
4 DR. FLACK: Yes.
5 DR. APOSTOLAKIS: Data are always important.
6 DR. FLACK: Okay.
7 DR. APOSTOLAKIS: The existence of data should not
8 be a driver.
9 DR. FLACK: Yes, that's true.
10 DR. GARRICK: Information, yes, perhaps.
11 DR. APOSTOLAKIS: But data at what level?
12 DR. FLACK: Yes.
13 DR. APOSTOLAKIS: See, it can be misinterpreted.
14 It may be at a much lower level.
15 DR. GARRICK: Evidence is another word that would
16 work.
17 DR. FLACK: Evidence?
18 DR. GARRICK: Yes; evidence and analytical methods
19 exist.
20 DR. APOSTOLAKIS: I would say just analytical
21 methods to make it clear.
22 DR. GARRICK: Yes.
23 DR. APOSTOLAKIS: Because it's too subtle
24 otherwise.
25 DR. GARRICK: Yes.

1 DR. FLACK: Okay; any other questions or comments
2 on the screening criteria?
3 DR. APOSTOLAKIS: If I were picky, I would ask you
4 what is reasonable cost, but I am not.
5 [Laughter.]
6 DR. FLACK: Moving right on --
7 [Laughter.]
8 DR. FLACK: Okay; so, the next -- these are the
9 comments, actually, that we received on the screening
10 criteria. First one is not a surprise; any new requirements
11 should be established using a risk-informed approach. I
12 think there was general consensus on that around the table.
13 Other comments: a risk-informed approach should be pursued
14 if it would lead to improvements in the effectiveness or
15 efficiency of either the NRC or stakeholders process.
16 DR. APOSTOLAKIS: That's a good comment.
17 DR. FLACK: Yes; so they felt that that should be
18 added.
19 Maintaining or improving safety should be the
20 primary focus, and this gets back to the comments we just
21 discussed about the public citizen groups supporting only
22 the first of those three bullets; all other issues were
23 secondary. And that the costs of the public and society
24 need to be considered in deciding to risk-inform a program,
25 and it was very sensitive that the public should be

1 considered in any burden reduction assessment, so it was a
2 sense of communication. They wanted to be on board,
3 particularly these public citizen groups, to any kind of
4 reduction that would be forthcoming from the activities that
5 we're proposing.
6 So, those are four comments. Some other comments;
7 as Marty had mentioned, a lot of the comments were picked up
8 as part of safety goal discussions and not so much the
9 criteria, but there were these other three comments which we
10 thought were important enough to put forth to you: that the
11 area suggested for examination include -- and this is for
12 risk-informing -- include broad scope licensees, unsealed
13 sources, sealed sources, engagers in transportation. Those
14 were the areas that were identified as being ripe or to be
15 looked at for risk-informing activities, regulatory
16 activities.
17 Also implementation and associated training
18 requirements needs consideration; again, that was brought up
19 as if we're going down a risk-informed path that we need to
20 be thinking of training to agreement states and that the
21 inspection process should always be thought about while
22 we're doing this, and it should fit hand in glove with the
23 implementation. So as you go down in parallel, think about
24 how you're going to do this in implementation space.
25 DR. GARRICK: John, we have a break scheduled in

1 the middle of your presentation somehow. Could you advise
2 us on what would be the --
3 DR. FLACK: This would be the greatest time to
4 take it since we're going into safety goals next so --
5 DR. GARRICK: Okay; then, I think if it's
6 agreeable to the committee, we'll take our break right now.
7 [Recess.]
8 DR. GARRICK: All right; I want to make an
9 announcement because we're trying to accommodate one of the
10 committee members here in being present during one of our
11 discussions. You will note on the agenda that item seven is
12 a discussion of joint subcommittee protocols, and one of our
13 committee members has to leave prior to that scheduled time.
14 So what we would like to do is move that topic up to the
15 lunch period, and we'll have it right here in this room.
16 We'll break long enough to get a sandwich or something, but
17 we will try to, while having our lunch, have that discussion
18 as much as we can to take full advantage of the full
19 subcommittee.
20 So unless there's any problem with that, that's
21 the procedure we'll follow, and if there needs to be follow-
22 on discussion, we'll have that at the designated time as
23 item seven on the agenda.
24 DR. APOSTOLAKIS: But we expect to finish a little
25 earlier, then.

1 DR. GARRICK: Yes; it appears that we might be
2 able to finish a little earlier.
3 Okay; go ahead, John.
4 DR. FLACK: Okay; so, now, we'll move on to the
5 second -- what was discussed at the second half of the
6 workshop, safety goals, and Gary Hollohan was the one that
7 presented this nice, interesting phrase from one of the
8 philosophers: there's one thing stronger than all of the
9 armies in the world, and that is an idea whose time has
10 come, and for that being safety goals for material and
11 waste.
12 DR. APOSTOLAKIS: Now, Victor Hugo also wrote Les
13 Miserables.
14 [Laughter.]
15 DR. APOSTOLAKIS: We are not implying anything by
16 that.
17 DR. FLACK: Okay.
18 What do we mean by safety goals? To establish a
19 nuclear safety goal that broadly defines an acceptable level
20 of risk to the public and in this case also the worker,
21 which is somewhat different or an extension, you might say,
22 of the scope of reactors.
23 Okay; first question that had been posed as part
24 of the Federal Register notice was what people should think
25 about their perceptions of what material safety goals are

1 and what they would achieve and whether or not it would be
2 supported by various individuals, and I believe in general,
3 the first bullet held true, that it was -- that most, if not
4 all the people, at the table believed that it would be a
5 worthwhile endeavor. So it is getting support out there to
6 move in this direction.
7 It was generally -- there was a general consensus
8 that the goal should be qualitative in nature at the highest
9 level, and then, there was some discussion on how it would
10 be implemented, whether it should be quantitative or
11 qualitative, and I think that would have to be a, you know,
12 exercise or understood in the context of an application, but
13 there was pretty much agreement that the goal itself should
14 be qualitative.
15 DR. APOSTOLAKIS: Why is that now?
16 DR. FLACK: Why is it? Why would one think of it
17 as being qualitative?
18 DR. APOSTOLAKIS: At which point would the
19 Commission say these are the quantitative goals?
20 DR. FLACK: Well, I think at least my opinion
21 would be that it would be more on how you implement it; that
22 the goal itself is more philosophical in nature, and I think
23 you'd find that Gary Hollohan feels very strongly in that
24 direction as well, that the goal being a philosophical goal
25 by its very nature would be qualitative.

1 DR. APOSTOLAKIS: Well, the quantitative health
2 objectives were quantitative.
3 DR. FLACK: Well, only when you got down to the
4 0.1 percent; you mean for the reactors.
5 DR. APOSTOLAKIS: Yes.
6 DR. FLACK: Yes; then you were into
7 implementation; what do we mean by this, no more risk to the
8 population and then came with well, what do you mean by
9 that, or limited risk to population; well, then, it comes
10 down to, well, how do you implement it? Well, then, the
11 next step would be something quantitative.
12 DR. APOSTOLAKIS: But it was part of the safety
13 goals statement.
14 DR. FLACK: You mean at the highest level, at the
15 highest level?
16 DR. APOSTOLAKIS: Yes, I think so.
17 DR. FLACK: It's not quantitative; it's
18 qualitative, yes.
19 DR. APOSTOLAKIS: It starts out with a qualitative
20 statement.
21 DR. FLACK: Statement, yes.
22 DR. APOSTOLAKIS: And then, it says for reactors,
23 it should be one-tenth of 1 percent of all --
24 DR. FLACK: Right.
25 DR. APOSTOLAKIS: -- other risks, which is part of

1 the --

2 DR. FLACK: Well, okay, I see what you're saying.

3 You say you take it as a package deal.

4 DR. APOSTOLAKIS: Yes; I take it as a package. I

5 mean, that's a statement of the Commission.

6 DR. FLACK: At what time do you make that

7 quantitative link? Is it still at that level?

8 DR. APOSTOLAKIS: I remember Gary was objecting to

9 putting core damage frequency and surrogate goals like that

10 in the --

11 DR. FLACK: Yes.

12 DR. APOSTOLAKIS: -- top level statement, but

13 there has to be some quantitative statement even at the, you

14 know, in the Commission's statement on safety goals.

15 Otherwise, the staff will have no guidance how to do it. I

16 mean, you can't put that in a regulatory guide.

17 DR. FLACK: No, I agree. I think that when it

18 comes down to the practicality of it all --

19 DR. APOSTOLAKIS: Yes.

20 DR. FLACK: -- it has to be something

21 quantitative, and it's that the numbers represent something.

22 It's not that, you know, you need to achieve it as a

23 requirement, but it tells you this is what I think it should

24 be, and you can't argue with that. I mean, once you write

25 down 0.1 percent, everybody understands what that means. It

1 takes away words like being reasonable and so on. This is
2 it. So I personally feel strongly about that myself.
3 However, and I don't know if everybody agrees with
4 that.
5 DR. GARRICK: Well, maybe you've already mentioned
6 this, but it seems that the distinguishing words here is
7 qualitative safety goals versus quantitative objectives.
8 That's what I'm reading from the rules and regulations. The
9 qualitative safety goals is this general statement about it
10 doesn't want -- nuclear power shouldn't add any significant
11 risk. The quantitative objectives is when you get into the
12 0.1 percent.
13 DR. FLACK: So there is at this -- that
14 separation --
15 DR. GARRICK: Yes.
16 DR. FLACK: -- of the two at that point.
17 DR. GARRICK: So they make the distinction --
18 DR. FLACK: Yes, okay.
19 DR. GARRICK: -- by separating goals from
20 objectives.
21 DR. FLACK: Yes; okay; if that's the one way of
22 looking at it then. So that's the break at that point. So
23 you have the goals, and then, you have objectives.
24 DR. APOSTOLAKIS: Yes, but, you see, the third
25 bullet should help define the objective of the regulation.

1 Is that what you mean?

2 DR. FLACK: This was in the context of the goals

3 themselves would help us do the, that that would be the

4 mechanism.

5 DR. GARRICK: I suspect that that was -- oh, I

6 see; this is work --

7 DR. FLACK: These are other comments --

8 DR. GARRICK: Right, right.

9 DR. FLACK: -- that were made at the workshop, and

10 I think that that was made in the context they're worth

11 pursuing because it would help define the objectives of the

12 regulations.

13 DR. GARRICK: All right.

14 DR. FLACK: But then, if you say if I'm going to

15 sit down and develop safety goals, then, how would I develop

16 them? Then, you would start with some overall philosophical

17 statement and from there go to your objectives.

18 DR. GARRICK: Well, maybe the approach here is one

19 step at a time.

20 DR. FLACK: Yes.

21 DR. GARRICK: Maybe we ought to resolve the issue

22 of a qualitative goal and go from there and -- it may not be

23 a bad idea to adopt that as a path of progression, and if it

24 can be tightened or bettered or improved on, obviously,

25 you'd want to consider alternatives for doing that, it

1 seems.

2 DR. FLACK: Yes; I was thinking the committee

3 could be very helpful in letting us understand that part.

4 DR. GARRICK: Yes.

5 DR. KRESS: Well, one of the admirable qualities

6 of the PRA and a risk assessment is it's quantitative. And

7 if you're going to make full use of that attribute, you need

8 to have quantitative risk goals, and I don't know how bound

9 you are to workshop feedback. I mean, these are things you

10 take into consideration.

11 DR. FLACK: That's right.

12 DR. KRESS: But I certainly would say somewhere

13 along the line, you need to have quantitative goals that are

14 -- that are expressed in risk terms related to PRA or risk

15 type activities. Just almost seems like you can't function

16 in a risk-informed world without it.

17 DR. FLACK: Very well.

18 DR. KRESS: Even 1.174 has quantitative things in

19 it that they use.

20 DR. FLACK: That's true; I think most methods that

21 you would look at -- I'm thinking about them -- ISA, PA, you

22 know, barrier, hazards barriers, target analysis; that sort

23 of thing, all involve some sort of quantification. You're

24 ending up with a quantified numerical result at the end.

25 And then, the question is how do you link that numerical

1 result to some higher level goal that you're trying to
2 achieve, and, you know, if we're thinking about risk of the
3 public out there, which is basically where it comes down:
4 how much risk -- the fact that we're using nuclear materials
5 means that we're going to expose the public to some risk. I
6 mean, they just can't avoid that.
7 So the question is then how much is acceptable
8 risk, and that's where you begin to get into what percent
9 are we talking about to the public and then the worker, for
10 that matter, because we're dealing with both of these more
11 in this arena, and structuring it that way so then, the
12 natural tendency would be, of course, once you come down to
13 a percentage, then, you're there; essentially, this is what
14 we think. And then, you can use different methods on seeing
15 where you lie relative to that goal and what you could do if
16 necessary to meet the goal but not as a requirement but
17 things that you could do to improve the regulatory process
18 in doing that.
19 DR. GARRICK: Tom, what about another thought
20 process here? Suppose we took this in a kind of a phased
21 approach and said, well, the first thing we maybe ought to
22 be doing is doing some risk assessments, some quantitative
23 risk assessments and seeing what kind of results we get,
24 what constitutes a rational form to put the results in, et
25 cetera, et cetera, and give some experience in developing

1 this measure before we necessarily freeze on how we want to
2 calibrate it?
3 In other words, you can always calculate the risk
4 without a goal. You don't need a goal to calculate the
5 risk. But you learn a great deal in the process of doing
6 risk assessments about what you can do and what you can't do
7 about what the contributors are, about what the
8 uncertainties are, and it's possible that that kind of
9 information could be extremely beneficial in the calibration
10 process.
11 DR. KRESS: Yes; I support that very strongly, and
12 I'll tell you why I view a goal or an acceptance criteria as
13 a completely separate entity than what you're talking about.
14 DR. GARRICK: Yes.
15 DR. KRESS: If you do what you said first, it
16 tells you what's possible.
17 DR. GARRICK: Right.
18 DR. KRESS: And that odds somehow enter into your
19 decision on what a goal or acceptance criteria you might
20 have. It tells you, you know, if your risk assessment of
21 some sort of activity gives you a number, and you set an
22 acceptance criteria that's impossible to achieve --
23 DR. GARRICK: Right.
24 DR. KRESS: -- well, you haven't done very much.
25 DR. GARRICK: That's right.

1 DR. KRESS: And I think it helps guide doing it
2 both ways.
3 DR. GARRICK: Right.
4 DR. KRESS: But I think you set -- I mean, the
5 basis behind acceptance criteria stand alone, in my mind,
6 and can be developed as a separate activity, but you've just
7 got to be careful you don't put a value and shoot yourself
8 in the foot, and your activity helps keep you from doing
9 that.
10 DR. GARRICK: Yes.
11 DR. FLACK: Okay; some of the other comments that
12 safety goals would help communicate what it is we're trying
13 to achieve, certainly, articulates that to the public. Then
14 came a lot of discussion about whether it should be
15 application specific versus, you know, global that captures
16 all of the different areas, and we could talk about that a
17 little bit more when we get to the case studies, but many
18 thought that it would probably be more than one goal that we
19 were talking about.
20 That the development, of course, would be a long
21 and involved process, and people recognize that. It wasn't
22 something that needed to be done because -- at the moment,
23 in a short period of time, to do something. But it's
24 something that I guess people felt they were more patient,
25 they were more patient with and that it was an evolutionary

1 kind of goals that would be developed in that. It would be
2 a long process. And that was satisfying, I think.
3 The relationship between safety goals and
4 strategic goals; we talked about some of that before. It
5 really needs to be articulated what we mean by strategic
6 goals, what do we mean by safety goals, performance goals
7 and how they all relate to one another was a comment that
8 was made. And so, these were all in the perception of what
9 we would use or envision safety goals to achieve and the
10 benefits from doing that.
11 The next question focused on the developmental
12 process of the goals themselves and that we should try to
13 understand the goals underpinning our current regulations as
14 part of that developmental process; to use case studies; to
15 develop safety goals and then, while doing the studies,
16 actually capitalize on their insights. So that leads us to
17 development of risk-informed approaches in parallel with the
18 safety goals, which is something that Marty had mentioned
19 this morning, so we're not really waiting for the safety
20 goals to be developed; there's a lot to be gained just from
21 working through the process and seeing how risk plays out
22 within that context.
23 There was some sensitivity to the desire for
24 consistency with and among agreement states and that there
25 may be different values across the different states, so it

1 may not be that easy just to have them all agree on what we
2 mean by a goal, but this was one of the issues that kept
3 coming up at the workshop.
4 DR. GARRICK: Were the agreement state
5 representatives vocal on the issue of safety goals and
6 probabilistic approaches? They have been in the past; I
7 just --
8 DR. FLACK: Vocal in the sense of --
9 DR. GARRICK: Vocal in the sense that most of them
10 were not favorably disposed toward doing PA probabilistic
11 performance assessment, for example.
12 DR. FLACK: Oh, well, I guess we never got down to
13 the level of where, you know, to discussions of the tools
14 and the methodologies --
15 DR. GARRICK: Okay.
16 DR. FLACK: -- in order to implement it. It was
17 more at the philosophical level, whether we need goals or
18 not, so maybe that may become an issue. I know that
19 resources, there's always a problem, and it came also up in
20 a context of well, if we go ahead with this, what about
21 training? How do we make it work.
22 DR. GARRICK: Okay
23 DR. FLACK: So, yes, I think that's the next level
24 down; that's something that we're going to need to be
25 concerned about.

1 And that gets to the next one, which is ensure
2 regional and local involvement, and that is, again, trying
3 to lead to goals that are consistent across the different
4 regions and localities; to certainly hold workshops, public
5 meetings in the diverse regions and involve stakeholders
6 early in the process, so these are things, again, that they
7 want to know what's coming; they want to be involved in. So
8 there was a lot of support in that regards.
9 Okay; what factors -- next view graph is what
10 factors need to be considered during the development of the
11 safety goals for materials and waste? And there's some
12 really sticky ones here, I think, the first one being
13 national versus local values again, the diversity across the
14 nation with respect to that. And then, came the question of
15 ecological risk, and that was discussed this morning in the
16 context of reactors: where are we going here that's
17 different than reactors with regards to that risk
18 contribution?
19 And then, we're looking at operational versus
20 accident risk, so you're looking at these two things
21 together, where with reactors, it's primarily accident risk
22 that we're dealing with.
23 And then, you have worker and public risk. So, we
24 look at the worker and what the worker is exposed to with
25 respect to his job and the risks that he would normally be

1 exposed to as part of that versus the public, who is outside
2 that area and what would they normally be exposed to, and
3 then, the goals would certainly be tailored differently
4 between the two, it would seem.
5 Harmonization among and with other agencies; that
6 was something that came up this morning about the other
7 different agencies and having different, possibly different
8 objectives. And then, there's a question of legislative
9 requirements and what legal ramifications there are in
10 developing such goals, and we'll probably hear a little bit
11 from Bob on the next one: risk to future generations is
12 sort of associated with waste disposal, so I'll let -- Bob
13 Bernero is here, and he will certainly want to discuss that
14 a little bit further.
15 Also, the risk associated with theft, sabotage and
16 diversion of nuclear materials. Now, we have a different
17 type of risk, the risk of diversion of materials that's
18 possibly to be considered in the scope of a type of safety
19 goal.
20 And then, you have the risk associated with
21 chemical toxic releases to the environment as part of the
22 activities that go on at these facilities, for example. And
23 then, there's always the hidden considerations that may be
24 embedded in the regulations that we have to be sensitive to
25 when we look at the regulations and say this is what led to

1 X. There were some considerations that were obvious, but
2 then, there may be others that were hidden in those
3 decisions that got us there, so it's not going to be a
4 simple process. There are quite a number of factors that
5 are going to be involved in considering safety goals for
6 this area.
7 On the next slide, we ask the questions about the
8 analogy between the reactor safety goals and the development
9 of material safety goals, material and waste disposal and
10 safety goals, and clearly, at one level, there is an
11 analogy, and that is the radiological risk to the public,
12 although the criteria might be different: what risk are you
13 exposing the public to?
14 So, I guess that's as far as it goes as being
15 analogous. The rest are the worker risk, the ecological
16 risk, the risk for diversion of materials; these would all
17 be different. These are somewhat different areas that are
18 not presently being captured by the reactor safety goals at
19 least in the implementation for reactor safety.
20 And then, five: the question of whether these
21 safety goals should be overarching, or there should be
22 safety goals in each of the areas, and this led to
23 discussion, and it seemed that there was a general consensus
24 that one goal wouldn't capture everything; that there would
25 be a need for separate goals and that we should use these

1 case studies, which I'll get into in a moment, the different
2 areas to explore safety goals in these different areas.
3 But, you know, at the end, there should be
4 something that brings them all together, and so, although we
5 may go down different paths, once we're there, we may find
6 that there is a next level up that we can kind of pull these
7 goals together at some higher level; it certainly can be
8 entertained, but it may not be so easy to start from that
9 point.
10 DR. KRESS: The reactor safety goals are -- takes
11 precedence to the mean values, which implies to me some sort
12 of statement about the uncertainties. When you choose a 0.1
13 percent value and say this in the assessed version of this,
14 you want it to be the mean value at this thing, what you're
15 implying is that given the level of uncertainty in that
16 assessment, this is an acceptable value to you given that
17 this is a confidence level that you're willing to accept.
18 Are you going to have some thoughts about confidence levels
19 or uncertainty in terms of these goals? Are you going to
20 say -- are you going to stick with this mean value concept?
21 How are you going to factor that sort of thinking into that?
22 DR. FLACK: And the question applies, you know,
23 it's hard to answer a question like that without an
24 application. I would say, of course, the mean value is the
25 preferred value just from the mathematical beauty of it, and

1 it captures the thoughts on your uncertainties and so on,
2 and when you deviate from that, you're using, you know, a
3 certain degree of judgment as to what, okay, if we're going
4 to go to something else, why are we going to something else?
5 DR. KRESS: Well, I personally don't view the mean
6 value as any unique position on the distribution. It is a
7 unique position because it's the mean, but it doesn't have
8 any special meaning to me other than that.
9 DR. FLACK: The mean's the mean.
10 DR. KRESS: Yes, it's the mean.
11 DR. FLACK: Yes; I recognize that.
12 DR. KRESS: But, you know, median is just --
13 DR. FLACK: That's another concept.
14 DR. KRESS: And any 95th percentile or anything
15 is, you know, just as unique.
16 DR. FLACK: Well, whatever measure is chosen, it
17 needs to represent something, and it's in its representation
18 that it becomes important, and it's not so much that we want
19 to try to achieve this value by comparing the mathematical
20 models and the results of those models to it so much on a
21 numerical basis, but it's something that comes out of how we
22 try to articulate our view on safety. What are we doing?
23 What does it represent as a value? And it leads you back
24 again to the percentage. When we talk about a certain
25 percentage of risk to the public, and then, the question is

1 well, how do you demonstrate that what you're measuring is
2 the risk and that it is indeed a certain percentage of what
3 the public is exposed to?
4 Well, you're comparing again two values. It's not
5 just a value; it's a comparison of values. And so, when
6 you're comparing values, one has to be more or less
7 consistent with that comparison, and comparing means is one
8 way to do it. There may be other ways of doing it, but it's
9 a good question that really needs to be fleshed out as, you
10 know, part of the studies, I think, that needed to be done,
11 and the models that are developed and how we represent risk
12 out there that the people in the public or the worker might
13 be normally exposed to, so it's coming to grips with that
14 within that context.
15 So any other questions on factors to be
16 considered?
17 [No response.]
18 DR. FLACK: Oh, I'm moving ahead already on this
19 one. Safety goals -- oh, okay; five and six, I think we
20 discussed.
21 How resource intensive -- we mentioned that
22 earlier, that it's too soon to tell exactly how resource-
23 intensive this project is going to be, but it certainly will
24 be long-term and involved. And one comment is, well, try to
25 do the easiest task first. Go after the low-lying fruit, so

1 you can be somewhat efficient and effective in the way that
2 you would attack the problem and also that as part of the
3 resources that NRC needs to again consider -- I must have
4 mentioned this three or four times already, the training
5 needs for the agreement states. So it will not be a simple
6 task.
7 Number seven, what will ultimately change if we
8 have goals from what we're doing now was a question we had
9 posed out there, and there were comments. Most people
10 believe that by putting goals out that we would likely get
11 safety improvements and relaxations where requirements do
12 not contribute to safety, so by knowing how safe is safe
13 enough is a two-edged sword there, but people believed, and
14 I think most people believe that it would make us look at
15 things differently and things would change one way or the
16 other.
17 It would certainly help consistency regarding the
18 regulatory process because people then understand what the
19 goals, the objectives of the registered, what we are trying
20 to achieve as a regulatory agency. There is potential for
21 savings, since you will focus resources on those areas that
22 will most help you reach the goal, and it certainly would
23 enhance communication by allowing the agency to express
24 their expectation of what is safe enough. So those were the
25 comments that were generated on the seven.

1 And that pretty much covers the spectrum of
2 comments that were mentioned at the workshop with respect to
3 those questions we had asked.
4 So if there's no other questions on those, I'll
5 just mention the case studies that were suggested, and these
6 are the different areas in which we were entertaining
7 further work to define -- for testing the screening criteria
8 and the value added in risk-informing a focused area and in
9 developing specific safety goals, so again, this would be an
10 in parallel kind of activity. One area is, of course, waste
11 disposal, high-level, low-level and decommissioning.
12 DR. APOSTOLAKIS: Is that high level waste
13 disposal area risk-informed already?
14 DR. FLACK: Is it already risk-informed? Well, we
15 could ask Chris that question if Chris wants to entertain
16 it. I would think so. I would there there's a great deal
17 of risk already embedded in that regulation. It would just
18 be a matter of going the next step up with it and saying,
19 well, you know, what fraction of the risk to the public are
20 we talking about and whether that's getting us there. I
21 don't know about specifically whether we could define it as
22 a goal. I mean, there are certain requirements in the
23 regulation that are being established, and presumably, if
24 you meet those regulatory requirements, you would meet some
25 goal.

1 But I don't know; Chris, can you shed any light on
2 that?
3 MS. LU: This is Chris Lu. I'm also a member of
4 the risk task group. The final part 63 now is in front of
5 the Commission for consideration, so I can talk from the
6 proposed rule that we put on the street. We do require, for
7 post-closure period, we do require a performance assessment
8 to be conducted, and in the proposed rule, we are looking at
9 the mean peak dose over 10,000 years as the compliance
10 point.
11 In terms of the safety goals, during the workshop
12 that we had last week, a couple of the participants pointed
13 out that since we do have a risk-informed performance based
14 rule, we can imply what is the safety goal from that using
15 the regulatory criteria and requirements.
16 DR. GARRICK: So the answer to George's question
17 is yes.
18 DR. FLACK: It may very well be.
19 DR. GARRICK: It seems.
20 DR. APOSTOLAKIS: This is the most risk-informed
21 activity in the NMSS, isn't it?
22 DR. GARRICK: Yes, yes.
23 DR. APOSTOLAKIS: At this point, and the EPA
24 criteria are also or used to be.
25 DR. GARRICK: I'm very top-down oriented, and as I

1 look at that list, I kind of come out that as far as safety
2 goals are concerned and risk assessment is concerned that 90
3 percent of the problem is number one. That's the bad news.
4 The good news is that we're well advanced in number one over
5 all the others in terms of the use of risk based methods.
6 You know, if you think about it, large process
7 facilities cast some packages and associated transportation;
8 there's no reason why we can't basically use the reactor
9 risk assessment technology to deal with those kinds of
10 problems. I also think that on medical uses and fuel
11 sources, the NMSS with the studies they've done recently are
12 in pretty good shape in terms of understanding what the
13 risks are and have done a very good job, in my opinion, of
14 pointing out the relative contribution of operational risk
15 and accident risk and concluded the thing that a lot of us
16 in this business have been saying for a long time, that the
17 real risk is operational risk. It's not accident risk.
18 So that kind of brings us back to as far as safety
19 goals are concerned and what is the real threat to the
20 public and the concern, and the achilles heel of the
21 industry is still number one. The rest is kind of no, never
22 mind almost, and I sure hope that our resource allocation
23 and our problem resolution emphasis reflects on our state of
24 knowledge about that. One of the questions this committee
25 asked very early on is that NMSS should tell us, on the

1 basis of their expertise, what they think the real risks
2 are.
3 Well, I think they've done a pretty good job of
4 that with respect to sealed and unsealed sources and medical
5 uses of isotopes and with respect to the by-product problem.
6 Beyond that, except for the repositories, the problem can be
7 handled in a very -- in a fashion very similar to the
8 reactors in the sense that it can be based largely on
9 reactor risk assessment technology. So -- and when you come
10 to the repository, then, the question of differences there
11 become critically important. It's not an accident issue on
12 repositories. It's a long-term performance issue. And I'm
13 not sure we've gotten that message out to the public.
14 I could almost argue there's not a safety issue,
15 and the reason there's not a safety issue is that we have
16 time to interdict and to intervene. We don't -- we are not
17 caught by surprise by a big accident. It's a long-time
18 deteriorating, degrading process, so the driver as far as
19 public risk is concerned on repositories is the denial of a
20 resource, not public safety. Now, we may eventually come
21 around to that, and we're not there yet, but there is no
22 public safety issue, because as soon as we detect that
23 there's something in the water, we do something about that.
24 As soon as we detect that there's something in the food, we
25 do something about it, and we have years and years of time

1 to do that.

2 So the real issue there is denial of a resource,
3 and it's probably the reason why EPA is so adamant about the
4 groundwater standard and protecting it now that they have a
5 standard. If they didn't have a standard, maybe there would
6 be a much more rational process developed here. But I think
7 that -- I'm hopeful that when we get around the safety
8 goals, these very activity-dependent issues are getting into
9 account and the differences, and I see the problem centering
10 principally around, still, number one, because I think for
11 the most part, we can piggyback what we know already except
12 for maybe the establishment of some sort of safety goal to
13 use as a rule.

14 So I'm hopeful that the thought processes here are
15 taking into account such things as in risk assessment, the
16 whole goal is to be realistic, and if you're realistic, the
17 issue is not public safety on waste disposal. It's resource
18 denial. And because you've got an opportunity to intervene,
19 to interdict, you don't even call it emergency response,
20 because it's not an emergency. It's something that happens
21 very, very slowly, and you can detect it very, very, very
22 early, and the opportunities are tremendous for corrective
23 action.

24 So I don't know if any of that kind of dialogue
25 came out in this workshop, but I sometimes think we confuse

1 the public because we present these issues sort of as if
2 they're similar, and I'm talking about waste disposal versus
3 reactor safety, and the differences are extreme,
4 DR. FLACK: Well, no --
5 DR. GARRICK: And they give us a great opportunity
6 to recast the problem and deal with it in a much different
7 way.
8 DR. FLACK: No, I think that's the reason why we
9 have these five areas. That's not clearly that it would be
10 similar to one of the others.
11 DR. GARRICK: Yes.
12 DR. FLACK: It definitely needs to be looked at in
13 its own right, and I think that was one of the areas where
14 it was identified as a specific area. But I think what the
15 message is is that maybe it's more in the vein of public
16 communication already what we have. We don't need anything
17 new. We need to communicate what we have better and that
18 it's really through the implementation, maybe, of some
19 performance measures that we will know when things have
20 deteriorated, and we can take those actions, and that's a
21 defense-in-depth mechanism, actually.
22 DR. GARRICK: That's an action that's no different
23 from today. We don't -- we don't plant crops in
24 contaminated fields today. We measure; we know what we're
25 doing. We don't use a water supply that's polluted or

1 contaminated, and I don't think we're thinking that way.
2 And that's what we're talking about here, and that's all we
3 have to do to keep it from being a safety issue. So I'm
4 just throwing out this kind of notion that it's not a safety
5 issue. It's an environmental impact issue, and that's all
6 it is for number one.
7 DR. FLACK: Yes.
8 DR. GARRICK: And yet, number one is 90 percent
9 plus of the reason why there is an ACNW or why there is
10 anxiety in the nuclear industry about the waste and that we
11 can't solve the waste problem.
12 DR. FLACK: Well, yes, that may be true.
13 Number two is not so far behind, though; I mean,
14 there is a lot of concern in that area as far as
15 transportation and so on.
16 DR. GARRICK: It shouldn't be, though.
17 DR. FLACK: Yes.
18 DR. GARRICK: It shouldn't be, because we know how
19 to analyze transportation, and we've done a tremendous
20 amount of field work in transportation. We've just done a
21 lousy job of making that field work available. We have run
22 trains into walls; we've run trucks into trains, and we've
23 damaged casks from every angle and perspective we possibly
24 can. And the public does not know that. They have not seen
25 that information, and they have not seen it organized and

1 compiled and structured in a way that communicates what we
2 do know about it.
3 I think transportation is one of the biggest bogey
4 mans that exist in this whole arena and that we as
5 technologists, as agencies, have failed miserably in
6 conveying what is known about transportation risks, and
7 we're spending billions of dollars as a result of it, not
8 only in the nuclear field but in other fields as well. So
9 we, regulatory agencies and technologists have failed
10 miserably in communicating to the public the transportation
11 issue.
12 DR. FLACK: Yes; I think there's an activity now
13 to plain English issuance of that work that had been done on
14 those transportation studies and the work that, I guess,
15 continues to go on in demonstrating that the risk is small.
16 DR. GARRICK: Yes.
17 DR. FLACK: But I -- you know, I think what your
18 concern is being appreciated by the staff and moving that
19 direction, but, you know, maybe they should have been there
20 earlier, but the plain English is supposed --
21 DR. GARRICK: No, what I'm trying to do is cut
22 through some of the things here, and, you know, I sometimes
23 think we treat these things as if they're equal when, in
24 fact, the differences are extreme and that if we fixed one
25 of these up there, you know, 95 percent of the problems

1 would go away.

2 DR. KRESS: I agree, and I think when you develop
3 some sort of risk acceptance criteria or safety goal, and
4 for the waste disposal area, I think it has to be an
5 acceptable frequency of a release exceeding a certain amount
6 of activity at a particular time. I think you have to have
7 all three of those things: an acceptable frequency, a given
8 amount of activity and at a given time. You have to
9 discount 10,000 years from now to present cost some way if
10 you have a cost criterion involved in it.

11 So it does -- I think you're exactly right, that
12 it impacts on how you -- what you say is an acceptable risk
13 and what you define as your risk is the risk of exceeding a
14 certain frequency of release at a given time.

15 DR. HORNBARGER: Just for the record, I want to
16 disagree with one thing that John said, and that is that
17 although I agree with much of what he said about the
18 differences, I think that one would have to be careful
19 saying that it under no circumstances would be a public
20 safety issue, and one of the comments he made was for
21 example, we don't drink polluted water today. This is
22 patently untrue if you look on a worldwide basis. One
23 recent example that has made the news is the use of a very -
24 - a water supply in Bangladesh by a very large number of
25 people, and we know full well that it's contaminated with

1 arsenic.

2 DR. GARRICK: And my point there George --

3 DR. HORNBARGER: But there's no alternative.

4 DR. GARRICK: My point there, and I've been to

5 Bangladesh, and I know that.

6 DR. HORNBARGER: Yes.

7 DR. GARRICK: But my point there, though, is we

8 have a choice. We have a choice to not drink that water.

9 DR. HORNBARGER: Yes; the people in Bangladesh

10 don't have much of a choice.

11 DR. GARRICK: Well --

12 DR. HORNBARGER: That's my point.

13 DR. GARRICK: We certainly would have a choice to

14 not consume radiation contaminated water.

15 DR. HORNBARGER: Well, I mean, it's easy to say

16 that the people in Bangladesh don't have to consume that

17 water. The point is they don't have an alternative. And

18 your point is that people in Los Angeles, for example, can

19 drink bottled water. That's fair enough. So it has to do

20 with what you envision the wealth of the society being at

21 the time, and that's very hard for us to say with certainty

22 that thousands of years from now, people in Nevada would be

23 able to drink bottled water.

24 DR. GARRICK: Well, I know it's an extreme view,

25 but it's a view I make to make a point, and the point is

1 that the opportunity exists to prevent it from being a
2 problem, whereas maybe if you had the right kind of reactor
3 accident, you wouldn't have that kind of opportunity.
4 That's really the only point.
5 DR. FLACK: Okay; so, these, again, are the five
6 areas that had come out as areas to be pursued possibly
7 using case studies to better understand the regulatory
8 process and to develop safety goals as part of that process.
9 No other questions, I'll move ahead to the last
10 slide I have, follow on activities.
11 So we're still digesting all that has come out of
12 the workshop, and we still have an open comment period, so
13 we're not at the stage where we have a fully-developed plan,
14 but that's where we're headed. As far as follow-on
15 activities, we're going to inform the stakeholders and
16 solicit comments by issuing a workshop summary with the
17 transcripts and making those transcripts available to
18 everyone. I believe we will be getting a copy for the
19 committee as well.
20 Draft a plan; that would be something that we're
21 planning on doing within this fiscal year. We'll develop a
22 plan, draft a plan and then, of course, interact with the
23 group, the NMSS steering group and so other stakeholders as
24 part of the development of that plan and then to inform the
25 Commission and the ACRS, ACNW of the plan and then what the

1 next steps will be. So, we're hoping to have that developed
2 as part of this fiscal year.
3 So, I would say we're in a stage now where we're
4 about to be off and running. So, with that --
5 DR. GARRICK: Well, that's great. We may have
6 time to hear from Mr. Bernero after all.
7 DR. FLACK: Yes, great.
8 DR. GARRICK: But let me, before I do that, make
9 sure that the committee is -- doesn't have any pressing
10 questions for John.
11 [No response.]
12 DR. GARRICK: No; thanks a lot.
13 DR. FLACK: Okay; thank you.
14 DR. GARRICK: It was very helpful.
15 DR. FLACK: I appreciate it.
16 DR. GARRICK: Bob?
17 DR. BERNERO: I promise to be brief; nearly
18 impossible.
19 [Laughter.]
20 DR. BERNERO: There is a two-page handout that I
21 brought a bunch of copies of, and I hope you all have it.
22 The handout, titled a process for risk-informed regulation
23 of activities, is intended to amplify the recommendations I
24 made at the workshop just discussed on April 25 and 26th,
25 and just before I remark on what the handout says, I would

1 ask you to recall that 20 years ago, when the reactor safety
2 goals were being developed, there was an explicit statement
3 in plain language of what the safety objective was, and it
4 varied in expression, but it was essentially that the risk
5 to those people who lived closest to a reactor would be
6 negligible compared to the average risk of accidental death
7 or cancer death, and that led to the hierarchy of one-tenth
8 of one percent and, you know, what database you're going to
9 use, and there's not that much sensitivity, because the
10 Commission could have argued for 10 percent, for 1 percent,
11 and it chose the very conservative value one-tenth of one
12 percent, and I can attest from my own participation in it
13 that it chose one-tenth of one percent because available
14 risk assessments said yes, that can be met, that strict
15 standard. It was holding the nose to the grindstone,
16 really.
17 The fundamental point that I try to make with this
18 handout is that one needs to start with a plain language
19 qualitative statement of the safety goals or objectives, and
20 a word of warning: in the NMSS arena, one has to do this
21 unique to the practice, a term often used in material
22 regulation as a practice. That could be radiography; it
23 could be bracha therapy; it could be low level waste
24 disposal, but it's a practice that involved the disposition
25 of radioactive material.

1 I suggest in the handout a way to approach the
2 statement of objectives for waste disposal, and one of the
3 alternatives -- and I've used it before -- no person in
4 future should suffer radiation exposure from these wastes
5 that we would not find acceptable today. Now, that's an
6 exposure statement. It could also be couched as a -- or
7 couched in risk terms or supplemented by a risk statement,
8 and more on that in a moment.
9 I suggest that in each arena, there needs to be a
10 plain language qualitative statement of objective. Then,
11 one can develop measures of protection, still staying fairly
12 close to qualitative language, not yet going into
13 quantification, and I suggest, using the example of waste
14 disposal, the three measures of protection.
15 DR. APOSTOLAKIS: Before you go to that, Bob, you
16 have another example in your plain language paragraph:
17 releases from this isolated waste should do no harm to
18 anyone. Doesn't that imply that there will be releases?
19 DR. BERNERO: Oh, yes, definitely.
20 DR. APOSTOLAKIS: And we know that that's a fact?
21 DR. BERNERO: Oh, yes, yes.
22 DR. APOSTOLAKIS: We're not trying to prevent
23 those?
24 DR. BERNERO: Yes; there's virtually no guarantee
25 of total containment for the what? Maybe 20 half lives of

1 all the isotopes. You know, we're quibbling about isotopes
2 like iodine-129 with semi-infinite half-lives, you know, so
3 20 half-lives of iodine-129 is, I don't know, 300 million
4 years or something like that.
5 DR. APOSTOLAKIS: I still think that your second
6 example is better, though.
7 DR. BERNERO: Oh, I'm not laying claim to any of
8 these, and I point out they don't have the risk terminology.
9 But the three measures of protection that I think are
10 expressing the idea I'm trying to develop; the first one is
11 the likely, the expected or the predicted release results in
12 exposures that are clearly acceptable. In other words, if
13 you decommission a reactor and leave a pile of rubble that
14 has detectable or measurable concentrations of
15 radioactivity, you are looking for your best estimate, your
16 most likely outcome to be clearly acceptable: no harm. You
17 wouldn't do it otherwise.
18 But then, you can go to a second, a risk
19 statement, taking careful account of uncertainties in
20 modeling, in data, in scenario development that taking those
21 uncertainties into account, the estimates to the persons in
22 the vicinity will be within the level of public exposure
23 risk that we find acceptable today. Now, there's a little
24 trick here: when you speak of the future exposure, you're
25 forced to consider a predicted exposure or the risk of

1 exposure, whereas what we find acceptable today is a
2 measured as well as a predicted exposure, and that's an
3 important difference.
4 And then, lastly, the third measure of protection
5 I would suggest is that go beyond the risk analysis; probe
6 further for weaknesses, whether it's with an importance
7 analysis or some other measure, because in waste disposal or
8 in other material practices, there are factors that do not
9 lend themselves to robust risk assessment. Radiography, for
10 instance, I think you'll hear more about it later; it's so
11 crucial to recognize that the individual radiographer is at
12 the heart of the problem, and modeling the radiographer and
13 his or her behavior is very difficult.
14 So the handout goes on into quantitative measures,
15 and the first thing I try to point out on the second page;
16 you've heard from me before on a ladder of exposures, going
17 from the high exposure down or from a low exposure up, and I
18 list only four rungs on the ladder here, from 1 millirem to
19 1,000 millirem, and the point I'm trying to make is we
20 glibly speak in risk assessment -- this is performance
21 assessment for waste disposal -- of calculating a mean
22 value, taking due account of the uncertainties in data,
23 scenarios, models and so forth. But no one ever speaks of
24 the uncertainty in the threshold of acceptability. There is
25 no doubt in my mind people speak of 25 millirem or 15

1 millirem or 4 millirem as a threshold of acceptability as if
2 to say below that number, I'm happy; I sleep well at night.
3 If it goes above that number, I'm unacceptable; the
4 situation is unacceptable.
5 That's wrong, and all you have to do is climb the
6 ladder one way or the other, and you see that. The standard
7 is uncertain because of the habitual choice of very low,
8 conservative numbers that make us talk about what I consider
9 indistinguishable things like 25 millirem versus 15 millirem
10 versus 4 millirem. To me, it's 10 millirem. There is no
11 distinction over this order of magnitude. One should only
12 speak in orders of magnitude.
13 And so, if you do performance assessment as risk-
14 informing, going back to the first three things, the first
15 three measures of protection, I would see that as a set of
16 findings of acceptability, not excluding the other
17 deterministic findings like human intrusion being dealt
18 with, things that don't lend themselves to risk assessment.
19 But for the risk information of decisions, the findings can
20 be something on the order of measure number one is the best
21 estimate; measure number two is the mean value of a good
22 performance assessment; and measure number three is the
23 suspicious probing for weakness in the analysis, recognizing
24 that there is a healthy difference -- I shouldn't say
25 healthy -- a substantial difference between what we're

1 stating as the standard of acceptability and what we might
2 recognize as a standard of tolerability.
3 DR. GARRICK: Is what you mean by number three the
4 whole curve?
5 DR. BERNERO: No, it's more than that; it's
6 probing the process itself for, you know, I've always
7 thought things that can bypass the event tree, that can
8 render the systematic analysis weak. You should be treating
9 in the, like, adequacy of site characterization; that's an
10 uncertainty that should be treated in a good --
11 DR. GARRICK: So it's, in the language of George
12 and Tom here, it's the unquantified uncertainty.
13 DR. BERNERO: Yes; yes, the things that you really
14 don't feel comfortable handling, and what I'm probing for
15 here is some systematic method to probe for weakness and to
16 look for the edge of the cliff, because the one thing you
17 don't want to do is have an unquantified uncertainty that
18 lurks and may likely give you catastrophic results. I have
19 to disagree with you, John, on what you were saying earlier
20 about waste disposal about if it leaks, we'll detect it, and
21 we can interdict it.
22 DR. GARRICK: I said that option exists.
23 DR. BERNERO: Yes, yes, that option exists, and I
24 would argument that in the plan language statement of no one
25 in future will suffer exposure or risk or whatever the

1 Commission or the regulator would choose to say that there
2 has to be a statement of willingness to depend on
3 stewardship or monitoring or even budgeting in the future.
4 Right now, I spend a lot of my time looking at the
5 Department of Energy's remedial action alternatives, and
6 frankly, they're driven by the availability of funds and
7 other factors that make it highly desirable that one could
8 have passive protection.
9 DR. GARRICK: Yes; well, we could debate this for
10 a long time, and this is not the place to do that, but the
11 point I was making is that it basically is no different than
12 the challenge that the human race has of dealing with any
13 environment. There's nothing peculiar about that
14 environment.
15 DR. BERNERO: Yes, and you're right in that, John,
16 and it's just that in nuclear waste technology, as against
17 contaminated waste technology or anything, there has been
18 this espousal of an objective to do it passively without
19 human intervention for whatever period of time and simply
20 assessing at some interval -- 10,000 years or 500 years or
21 whatever -- how successful has that been, or how successful
22 would we predict that to have been.
23 DR. HORNBARGER: Bob, just a comment. You used
24 the 25, 15 and 4 millirems, and we all know that those
25 numbers have some associations, and I would just point out

1 that the 4 millirem, if it's interpreted as radionuclide
2 specific, may, in fact, be one or two orders of magnitude
3 lower than 15 to 25.
4 DR. BERNERO: Yes, yes, if you use ICRP-2 and all
5 of that, yes.
6 The point I would make on waste disposal, my
7 understanding -- I didn't participate or listen, but in the
8 Maine Yankee decommissioning, I understand that there has
9 been heated debate about whether 25 millirem is sufficiently
10 protected vis-a-vis 15 millirem, and that, to me, is
11 terminal bottom line disease.
12 DR. GARRICK: Well, hasn't the state already put
13 their limit on it of 10?
14 DR. BERNERO: Oh, yes, most of the states do at
15 10.
16 DR. GARRICK: Yes.
17 DR. BERNERO: Yes; South Carolina, New York State,
18 and I wasn't, you know, ruling out any. But the -- I think
19 to quarrel about the level of protection provided by 10
20 versus 15 betrays that the argument is in the wrong forum,
21 you know; the point has been missed. That's not risk-
22 informed.
23 DR. KRESS: Bob, I'm interested in your comment
24 about comparing measured risk versus predicted risk as being
25 comparing apples and oranges to some extent, and with

1 regard, with respect to the high level waste repository, I
2 would expect an acceptable risk 1,000 years from now ought
3 to be much different than an acceptable risk tomorrow or, I
4 mean, 10 years from now. How do you deal with that in
5 acceptance criteria? How do you factor that kind of time
6 consideration into a risk acceptance criteria?
7 DR. BERNERO: It's factored in by the underlying
8 assumption that there will be no change in the vulnerability
9 of the human body to radiation exposure and also no
10 significant change in the ability of medical science to cure
11 cancer; that radiation induction of cancer and the relative
12 fatality from cancer will not change. There has been
13 substantial change in -- just in my career, I recognize, but
14 the fundamental assumption is today's standards will be
15 appropriate standards to judge the future.
16 Now, as far as oversight is concerned for
17 hazardous waste or for radioactives in hazardous waste at
18 circla sites, the institutional mechanism is fix it to the
19 appropriate standards, and for circla, come back every 5
20 years and look at it; for RCRA, come back every 30 years and
21 look at it, and we'll talk about it then. That's a vastly
22 different thing. The only place in radioactive waste that
23 we encounter something like that is in the rather bizarre
24 case of uranium mill tailings. If you ever get a chance to
25 go look at it, uranium mill tailings are monitored annually

1 after site closure with NRC oversight, and people go out
2 there with shovels and tree planting to fix them.
3 DR. GARRICK: Bob, it's our fault -- I realize it
4 -- but your two minutes are up.
5 [Laughter.]
6 DR. BERNERO: Thank you.
7 [Pause.]
8 DR. RUBIN: Good morning. My name is Alan Rubin,
9 and Bob is always a hard act to follow, but I'll do my best.
10 I'm a section leader in the probabilistic risk analysis
11 branch of the Office of Research, and I've had the pleasure
12 and the opportunity to have a number of interactions with
13 the ACRS before, but this is my first time to have some
14 interactions with ACNW and the joint subcommittee.
15 The subject I'll be presenting will be one of the
16 applications of PRA for analyzing the risk from dry casks,
17 and let me first mention that this is an effort that
18 involves a number of participants both in the Office of
19 Research and in the spent fuel project office of NMSS.
20 DR. KRESS: Is this on site at reactor plants
21 you're talking about?
22 DR. RUBIN: This is on-site storage, dry cask
23 storage.
24 DR. KRESS: On-site storage.
25 DR. RUBIN: Dry cask storage, yes; I'll get into

1 the scope and the nature of the program as well, Tom.

2 The participants, the many participants from the

3 Office of Research are myself, Ed Roderick and Chris Rider,

4 also in the probabilistic risk analysis branch; Ed Hackett

5 in the materials and engineering branch and Charles Tinkler

6 in the safety margins and systems analysis branch, and they

7 are with us today.

8 The time frame that we're in now in developing the

9 plan, it's a very good opportunity for us to get feedback

10 from this joint subcommittee on our approach to the plan,

11 which I will be presenting today, so we welcome this

12 opportunity to get your comments.

13 For an outline of what I'll be going over, I'll

14 first present the objective of the project itself. I'll go

15 over the scope as we see it as well as the major planned

16 tasks that are included in the program plan, which will

17 include discussion of potential accident initiators; how we

18 plan to screen those initiators; looking at various

19 initiating event frequencies and sequence frequencies and

20 consequence and risk quantification, and I will also discuss

21 the present schedule and status of our plan right now and

22 overall program.

23 We heard presentations earlier this morning at a

24 fairly high level, sometimes philosophical level on safety

25 goals, and this time, we're going to get into a specific

1 application of PRA, and the objective of this risk analysis
2 is to do a pilot PRA for a specific spent fuel dry cask
3 storage system at a reactor site, and this is a first of a
4 kind, and it's got challenges being a first of a kind, which
5 we have encountered; we need to overcome some of these
6 challenges in carrying out the program.
7 In terms of NMSS, what we expect to provide and
8 NMSS hopes to get out of this program is to get information
9 in several areas, to see whether there's a need to do
10 additional site-specific PRAs; to see whether there's a need
11 to develop any additional data or methods for doing PRAs for
12 dry cask storage and to see whether some additional analysis
13 would be required. And in the longer term, NMSS would like
14 to be able to use this information to provide input to the
15 safety goal assessment; to risk-informing 10 CFR Part 72 as
16 well as for the inspection programs for dry casks.
17 [Pause.]
18 DR. RUBIN: The participation in the program
19 involves all three divisions in research, and it's a team
20 effort: division of risk analysis and applications has the
21 lead for the systematic analysis and integration of the PRA
22 as well as coming up with frequency and probabilistic
23 assessments; division of engineering technology will
24 participate in coming up with analyses and engineering
25 assessments of the materials of the multipurpose canister

1 and the cask as well as the overpack structure, and I'll
2 give a figure later on, a diagram to tell you a little bit
3 more about the cask itself and develop some thermal
4 analysis.
5 Division of systems analysis and regulatory
6 effectiveness will provide assessments of the radiological
7 release and dose assessment to the public in the event of an
8 accident. It's very important that we coordinate this
9 program very closely with the spent fuel project office in
10 NMSS, and we've done so up to this point, and we expect to
11 continue to do so. This is in terms of both developing the
12 program plan itself as well as carrying out the plan.
13 We also anticipate that we may need some
14 information from licensees to provide dry cask design or
15 operational data, in effect, perhaps some analysis that
16 supports some of their information, their safety evaluation
17 report. We expect that we will also need some contractor
18 support in the area of human reliability analysis for -- to
19 address the handling and transport aspects of transporting
20 the fuel and the cask itself and perhaps other additional
21 contractor support as well.
22 DR. APOSTOLAKIS: So you can do everything else;
23 start your thermal analysis, everything except human
24 reliability analysis?
25 DR. RUBIN: Well, we know that we may need some

1 analysis as well. It's going to depend on what's available
2 from the contractors, from the -- not from the contractor;
3 from the analysis already done for design basis accidents
4 analyses by the vendor, by the licensee, and see whether we
5 can extrapolate that or whether we need to do some
6 additional analyses, and we're wrestling through right now
7 to see whether we can do that in-house or we'll need
8 contractor support.
9 DR. GARRICK: Did you say that some of the same
10 team members are involved as were on the spent fuel pool?
11 DR. RUBIN: Yes; that is correct; same names, same
12 guilty parties.
13 DR. GARRICK: Yes.
14 DR. RUBIN: That's the team. Let me go over
15 what's entailed in the scope of the project, and in the
16 recommendation from NMSS, we select the whole tech high
17 storm 100s dry cask for analysis for this pilot PRA, and
18 that's based in the potential usage of this dark cask as
19 well as availability of data that's been submitted in the
20 licensee's application. It's the different modes of the
21 analysis, the analysis itself will include handling of the
22 fuel and the dry cask; onsite transport, transport of the
23 cask to its storage pad as well as the long-term storage
24 onsite. It does not go beyond that; it does not include
25 transportation PRA, which has been done separately, separate

1 risk assessment for that.

2 We will need to select a site, and most likely, it
3 will be a generic site such as we've done for the AP600
4 reactor design, which should encompass as large as possible
5 that number of site characteristics in the country. We
6 don't include all of them, but a large percentage of the
7 various characteristics of the site.

8 The types of events that we will consider include
9 normal and accident conditions such as -- including design
10 basis and beyond design basis accidents; site-related
11 phenomena such as earthquakes, flooding, high winds as well
12 as man-made incidents that can occur during a handling of
13 the cask like cask drops or other handling accidents.

14 We also will look at the condition of the fuel in
15 the canister itself in the cask; whether there are some
16 preexisting fuel failures; the condition of the clad, which
17 will factor into the assessment in terms of consequences and
18 risk from radiological release from the fuel and from the
19 cask.

20 And a real important point that's part of the plan
21 is to say how are we going to assess the results? You know,
22 what is the criteria? We talked about that this morning and
23 developed -- and NMSS developing safety goals, whether it be
24 the probability of release of radioactive material to the
25 environment or radiation-induced latent cancer fatalities to

1 the public, and we expect to work very closely in NMSS to
2 provide input to specify these measures of success related
3 to the safety goals that you've heard discussed this
4 morning.
5 That's a broad picture of what the scope of the
6 program, the PRA, will entail. For some background; I think
7 this sketch will be useful just to see what we're talking
8 about.
9 DR. GARRICK: I may have missed something, Al.
10 DR. RUBIN: Okay.
11 DR. GARRICK: Are you calculating radiation-
12 induced latent cancer fatalities?
13 DR. RUBIN: If the release aspects include that,
14 we may be calculating that.
15 DR. GARRICK: Okay.
16 DR. RUBIN: Yes.
17 DR. GARRICK: All right.
18 DR. RUBIN: Depending on the release, and we may
19 get into the meteorology and --
20 DR. GARRICK: I see.
21 DR. RUBIN: Yes.
22 DR. GARRICK: So it depends on your source term.
23 DR. RUBIN: That's right.
24 DR. GARRICK: Yes; okay.
25 DR. RUBIN: Yes.

1 First, the fuel itself is put into this
2 multipurpose canister. The fuel assemblies are inserted in
3 that canister. It holds up to 25 BWR assemblies -- 24 PWR
4 assemblies or 64 -- 68 BWR assemblies. The canister is
5 drained of water and pressurized and filled with helium.
6 The purposes are to prevent corrosion of the steel on the
7 multipurpose canister itself as well as to enhance heat
8 transfer to the canister. When the canister is inserted,
9 the overpack itself --
10 DR. APOSTOLAKIS: Why is the called multipurpose?
11 DR. RUBIN: It's just the name given. It's
12 multipurpose because it can be used for storage as well as
13 transport.
14 The overpack is a large part of the structure.
15 That's approximately a 19-foot high structure, 11-foot
16 outside diameter. It's got an annulus of steel both inside
17 and outside that diameters, and it's filled with about 2.5
18 feet thick concrete, and the overall weight of this
19 structure when filled is about 180 tons.
20 In order to promote cooling in the long-term
21 during storage, there are inlet and outlet events, four of
22 them around the periphery of the multipurpose -- of the
23 overpack itself. So it's all natural circulation vented
24 system; no fans, no pumps, no active systems. It seems like
25 a relatively straightforward PRA kind of analysis compared

1 to a reactor. But it's -- even though it seems
2 straightforward, this is the first time that it's being
3 done.
4 And the first step in the program plan is to
5 identify the potential accident initiators, and that was
6 brought up this morning as an important point. We want to
7 be sure we have as complete as possible set. We've had
8 preliminary discussions with the spent fuel project office
9 staff to identify issues that they have thought about, and
10 we'll be adding some other issues, potential challenges to
11 the functions of the cask leading to a potential release.
12 And I'll get into some of these initiators in my next slide.
13 We'll assess the initiators that have been
14 identified in other related studies or PRAs and see if
15 they're applicable to the dark cask, and we'll include those
16 as appropriate. And it comes down to pretty much
17 categorizing the many initiators into their effect on the
18 mechanical impact of the cask; the thermal impact and impact
19 on criticality and perhaps some others, and for each of
20 those accident type initiators, we'll address the various
21 system modes, the handling, the onsite transport of the cask
22 and storage for the 20-year license of the cask itself.
23 To go through these preliminary initiating events
24 that we have looked at, I first want to make it very clear
25 that many of these events are included in design basis for

1 the dry cask, but we need to look for PRA purposes beyond
2 design basis types of events, and that's why we're including
3 the kinds of events that you see here. First of all, in the
4 categorization of mechanical impacts, we'll be looking at
5 handling accidents where the cask could be dropped either
6 before or after sealing of the canister, and I should have
7 mentioned -- let me go back for a moment -- the canister
8 itself.
9 The canister is sealed, and there is an overpack
10 seal for the whole dry cask system itself. So we will be
11 looking at potential weld failures of the seal on the
12 multipurpose canisters as an example of a failure or release
13 path. As an example for the drop of a cask, the current
14 design basis is the cask is designed for a drop height of 11
15 inches, right about a foot. So are there some ways or some
16 scenarios where, you know, that height by human error or
17 something else could be exceeded? And those are the kinds
18 of things we'll be looking at in the human reliability
19 analysis area.
20 In transferring the cask, that the cask
21 potentially could tip from sudden movements or stop during
22 onsite transport; in the storage of the cask, the long-term
23 storage, could the cask be hit by a tornado-generated
24 missile large enough to impact the cask, knocking it over or
25 impact by a truck or an aircraft accident? Could the cask

1 tip over from a seismic event? That's not mentioned on the
2 slide, but it is included in our list of events that we're
3 looking at.
4 [Pause.]
5 DR. HORNBARGER: So your tornado scenario is the
6 cask tipping over rather than being penetrated?
7 DR. RUBIN: Yes, yes; I imagine it would be hard
8 to penetrate a steel barrier with two and a half foot thick
9 concrete.
10 So these external events that we're looking at, by
11 the way, are very similar and parallel to that of a reactor
12 analysis in an internal, individual plant examination of
13 external events program, the IPEEE program.
14 DR. HORNBARGER: Of course, there are reports in
15 tornadoes of a piece of straw being driven through concrete
16 walls.
17 DR. RUBIN: And it would have to -- we have not
18 considered the straw impact on a concrete wall. We are
19 looking for some feedback during this discussion today.
20 Thermal air accidents is another area; obviously,
21 as I pointed out, the cask has a venting for heat removal.
22 Could there be some scenarios where the high heat load
23 assemblies are inadvertently loaded into the cask, having
24 higher heat loads that would be anticipated? In
25 transferring the cask onsite, looking at a fire from ignited

1 fuel from the transport truck.

2 DR. APOSTOLAKIS: I don't understand that. Can

3 you explain that scenario a little bit better?

4 DR. RUBIN: Which one? The transfer?

5 DR. APOSTOLAKIS: The transfer, yes.

6 DR. RUBIN: The cask is transferred by vehicle to

7 the storage pad, and if that vehicle has an accident, and

8 it's got a certain amount of fuel in it, what kind of

9 thermal loads from the truck --

10 DR. APOSTOLAKIS: Oh, the fuel.

11 DR. RUBIN: The truck, the fuel.

12 DR. APOSTOLAKIS: Oh.

13 DR. RUBIN: The gasoline --

14 DR. APOSTOLAKIS: Okay.

15 DR. RUBIN: -- in the truck, okay?

16 All right; and long-term storage, vent blockage,

17 perhaps, from flooding, long-term flooding, for example, how

18 long that could occur and what temperature conditions would

19 then result in the fuel in the assemblies, and what impact

20 would that have on the integrity of the fuel in the

21 canister? Look at high ambient temperatures associated with

22 a fire; looking at perhaps a fire associated with a crash of

23 an aircraft.

24 And then, finally, we're including criticality

25 events, where, from handling -- the possibility of highly-

1 enriched fuel being loaded in a cask or water ingression
2 from a flood with a failure of the overpack and a failure of
3 the multipurpose canister; flooding and causing criticality,
4 perhaps.
5 There's a fairly long list, and there are some
6 more details that I'm not going into today, but a real
7 important part is that we expect in our next step to do a
8 screening.
9 DR. APOSTOLAKIS: Your event trees will be fairly
10 simple.
11 DR. RUBIN: Oh, yes, oh, yes, and that's where
12 we're looking at four types of entries, many types -- you
13 know, there could be many possible ways that you could
14 impact the thermal loading by blocking the vents, anywhere
15 from flooding to a bird's nest that's not found for awhile,
16 but they basically are all in the same event trees; that's
17 right. We're boiling down a lot of these different types of
18 sequences into a short, limited number of event trees.
19 And a real important part in the first phase of
20 this program is the preliminary screening, the consequence
21 analysis. The purpose of this is to eliminate any
22 inconsequential either initiating events from further
23 consideration based on the sequence frequencies or the
24 release magnitude, and the release magnitude would be based
25 on the extent of cask failure, and the purpose of this

1 screening study also is to see whether we would need more
2 information for some additional, more detailed analysis.
3 And I'll get into this screening study a little more in the
4 next slide.
5 DR. GARRICK: Do you have a sense for which
6 scenario is going to be your bounding scenario?
7 DR. RUBIN: I mean, my gut feel is that, you know,
8 you have a passive cask sitting there that we really need to
9 focus on handling the human aspects of the transport. We
10 don't have a bounding scenario right now, but I think that
11 scenario where there has not been much done on the human
12 reliability of the cask handling, and we intend to look at
13 that pretty closely.
14 DR. GARRICK: Thank you.
15 DR. RUBIN: As far as the steps going for the
16 screening and preliminary consequence analysis, we are
17 identifying and -- the information available to come up with
18 the initiating events and the event trees and fault trees.
19 We'll assess the sequence frequency and the consequences on
20 a limited basis for screening purposes, and we would
21 eliminate any significant sequences from further
22 consideration. There are basically several ways to deal
23 with this.
24 MR. RUBIN: There is basically several ways to
25 deal with this, that a given initiating event, the cask

1 doesn't fail or the canister doesn't fail, and a third
2 screening approach would be, even if there were some kind of
3 mechanical failure, would the release have an adverse impact
4 on the public?
5 Clearly, there's data, there's methods going into
6 here.
7 We'll have some uncertainty and sensitivity
8 analysis that we'd expect would be part of this screening
9 study, and as we go along through this, particularly since
10 this is a first of a kind, we expect to have interactions
11 and peer review and comments as we go along, and it could be
12 that, once we're finished with the screening study, we may
13 have eliminated a lot of scenarios.
14 DR. KRESS: All of them?
15 MR. RUBIN: I can't tell you now. Stay tuned. If
16 I know that --
17 DR. KRESS: You're starting out with some sort of
18 a measure of what release would be acceptable to you?
19 MR. RUBIN: That's something that, as I mentioned
20 earlier, we're going to need to determine with NMSS what
21 measure of release. Do we use the same kind of measure
22 that's used for reactors? Given that there is nothing
23 better, we may try that, but I think that's yet to be
24 determined.
25 If there are some sequences or events that don't

1 screen, we would -- the next step would be a more detailed
2 frequency quantification for those sequences, fairly
3 straightforward looking, first to see what kind of data are
4 available, benefits of cost of getting that data, refining
5 the event trees and fault trees and computing sequence
6 frequencies and sensitivity studies as necessary.
7 The purposes for this more detailed analysis would
8 be to look at the radiological consequences, the
9 calculations for those important sequences that don't
10 screen, determine the releases from the cask, the off-site
11 consequences, as well as the risk calculations.
12 DR. APOSTOLAKIS: You will develop frequency
13 consequence curves?
14 MR. RUBIN: Yes. Come up with overall risk, yes.
15 DR. APOSTOLAKIS: What's DCS, by the way?
16 MR. RUBIN: Dry cask system.
17 DR. APOSTOLAKIS: Okay.
18 DR. KRESS: You're going to do this on a cask
19 basis or you're going to look at the whole --
20 DR. APOSTOLAKIS: The size of casks.
21 DR. KRESS: -- storage?
22 MR. RUBIN: We're looking at a site where there
23 may be on the orders of tens, fifty, at probably maximum 100
24 casks at a site.
25 DR. KRESS: They're all going to undergo the

1 accident at the same time.

2 MR. RUBIN: Well, not necessarily, no. We're

3 treating it individually, but if there is some -- a sequence

4 that would be a common mode failure, like a seismic event

5 tipping over casks, then it would impact more than one --

6 potentially could impact more than one cask.

7 DR. GARRICK: But if your screening indicates that

8 there is only one scenario that really can result in any

9 kind of a consequence problem, does that mean that's what

10 you'll analyze, or will you still analyze all the scenarios?

11 MR. RUBIN: No, if we can screen them out, we will

12 not continue, no. Our attempt is to get some results as

13 early as we can, you know, with some reasonable information,

14 and not do more than is necessary.

15 MR. HORN: What happens if they all screen out?

16 MR. RUBIN: I'd say, then, the next phase doesn't

17 -- we stop right there. We wouldn't have a need for more

18 detailed analysis.

19 But let me go on. You're leading into my next

20 slide, which is potential additional analyses or assessments

21 which may be a followon to this first pilot PRA, looking at

22 various fuel conditions such as high burn-up fuel, the

23 number of casks at a site, there's a proposal for a private

24 spent fuel storage facility in Utah, and looking at various

25 cask -- different designs. That's something that could

1 follow on to this.

2 We're looking at one specific design for this, the

3 Holtec High Storm. Other designs have different features,

4 and we want to be able -- maybe want to be able to see how

5 that could impact our screening analyses, for example.

6 The final slide is our schedule and the status.

7 Where we stand right now -- we've developed a

8 draft program plan in Research that we've discussed with

9 NMSS, and we're in the process of getting ready to send that

10 formally to NMSS.

11 The project scope, identifying the site

12 characteristics, the design, initiating events, we intend to

13 have done in the August timeframe, and we would hope that,

14 depending on the available resources and data, to have a

15 draft report available in about a year from now on the

16 screening assessment, and that depends on the availability

17 of data and what kind of information we need as we go along,

18 and then any followon, additional sequence calculations

19 would need to be determined following the conclusion of the

20 screening part of this project.

21 That hopefully will give you an overview of what

22 our plans are and where we're going.

23 DR. GARRICK: Are you finding anything unique here

24 with respect to methodology requirements? In other words,

25 are at a loss for methods for any part of the analysis?

1 MR. RUBIN: I think what we're focusing on -- we
2 want to have a complete set of the sequences. I'd say no, I
3 don't think we've met that through the problem, the area,
4 but we want to include the sequences and the data. If
5 there's not data, what are we going to do?
6 DR. GARRICK: Yeah.
7 MR. RUBIN: Are we going to do some analyses?
8 We're going to base our assumption on some extrapolation of
9 analyses that have already been done for design basis-type
10 events? That's what I see as probably the most resource-
11 intensive, as well as the human reliability aspects.
12 DR. KRESS: I think you'll be faced with some of
13 the same issues pointed out with the spent fuel pool study,
14 what's the source term, how you deal with the fire-driven
15 event, and what are the things you don't know about and the
16 effects of hydrided clad.
17 I think the issues are the same for the cask, plus
18 a few more, and that's what do you know about long-term
19 deterioration of the cask that may cause internal corrosion
20 events like -- driven by moisture and maybe hydrogen that
21 gets produced in the process.
22 MR. RUBIN: I should mention at this time, in
23 response to that, there are some ongoing related activities
24 that Research has in support of NMSS and dry cask.
25 Now, the results of those programs -- probably

1 most of them will not be available in time for the screening
2 study, but for example, the -- looking at -- I think it's
3 the Surry cask, fuel in the Surry cask, looking at the
4 condition of that fuel, they took an initial, the fuel
5 cladding looks fairly good, but they haven't done analyses
6 in the fuel cell yet.
7 DR. KRESS: The problem with the screen that I see
8 is how do you determine the initiating frequency of a fire
9 that's a self-igniting fire?
10 MR. RUBIN: A self-igniting fire is okay.
11 DR. KRESS: You know, I see how you can get more
12 of a fuel spill from a truck. You could probably come up
13 with the frequency of that, but a self-ignited fire that may
14 be driven by the -- by a change in the heat transfer
15 properties of the system so that it overheats to some
16 emission temperature that's driven by the hydrided state of
17 the fuel -- you know, how do you get a frequency?
18 MR. RUBIN: Well, you have an inert atmosphere.
19 You have helium. It's a helium-filled canister.
20 So, you would have to have a sequence where the
21 helium has escaped, you haven't detected it for a long time,
22 and there are inspections that go on on storage to look for
23 those kinds of things, to look to see if the vents are
24 blocked or not.
25 DR. KRESS: It may be driven by the fact that you

1 have that helium.

2 MR. RUBIN: Oh, yes. Oh, yeah.

3 DR. KRESS: Could very well be.

4 MR. HORN: Just for my education, you mentioned

5 that the cask drop was 11 inches, but the multi-purpose

6 canister is tested at a higher elevation, is it not?

7 MR. RUBIN: Oh, yes, it is. That's about three or

8 four feet. The transfer cask --

9 MR. HORN: Yeah.

10 MR. RUBIN: Its drop rate is about, I think, 40-

11 some-odd inches. When I said the 11 inches, that was for

12 the whole over-pack.

13 MR. HORN: There's also a design basis fire test?

14 MR. RUBIN: Yes, there is, and it's the amount of

15 fuel that's in the truck, and the question is if there's

16 more than that -- those kinds of things are in the design

17 basis, which we already -- you know, that information has

18 been provided, at least the results of those analyses have

19 been provided to the agency.

20 DR. GARRICK: As long as it's not located next to

21 the fuel tanks for the diesel generators, huh?

22 MR. RUBIN: A lot of what-if's.

23 DR. GARRICK: All right.

24 Any other questions?

25 [No response.]

1 DR. GARRICK: We'll enjoy hearing a progress
2 report as you start.
3 MR. RUBIN: Okay. We intend to keep the joint
4 subcommittee informed.
5 DR. GARRICK: Okay.
6 DR. KRESS: Given the status and progress of Yucca
7 Mountain, I think this is an important study, because we're
8 probably going to have a lot of dry cask storage on-site.
9 MR. RUBIN: And if we need to go into the -- you
10 know, the more detailed sequence analysis, that's going to
11 take an extended -- probably an extended period of time.
12 DR. GARRICK: Thank you. Thank you very much.
13 MR. RUBIN: You're welcome.
14 DR. GARRICK: It's a remarkable event, but we're
15 on schedule.
16 DR. KRESS: You run a lot tighter meeting than
17 George does.
18 DR. GARRICK: George has a lot more patience than
19 I have.
20 Okay.
21 Why don't we adjourn for lunch, then, unless --
22 and we're going to reconvene here and discuss protocol as
23 soon as we grab a sandwich and bring it back here, 12:15.
24 [Whereupon, at 11:55 a.m., the meeting was
25 recessed, to reconvene at 1:00 p.m., this same day.]

1
2
3
4
5
6
7
8
9
10
11
12
13
14
15
16
17
18
19
20
21
22
23
24
25

1 A F T E R N O O N S E S S I O N

2 [1:00 p.m.]

3 DR. GARRICK: The meeting will come to order, and

4 this afternoon we're going to talk about risk-informing fuel

5 cycle programs, etcetera, etcetera, and Mr. Sherr is going

6 to take the lead on it, I gather.

7 MR. SHERR: I'm going to give a quick overview on

8 the background of the fuel cycle programs for risk-informing

9 the regulations, and Dennis Damon, who is now with the NMSS

10 work group but until recently has been in FCSS and been an

11 integral part of the work that we've been doing in this

12 area, will be providing more detailed information.

13 DR. APOSTOLAKIS: Now, what is the definition --

14 in the documents I have, there was a very long paragraph

15 where one can find the definition of byproduct material, but

16 the definition itself was not given.

17 DR. GARRICK: It's in the Atomic Energy Act.

18 DR. APOSTOLAKIS: I have to go back to that. It

19 gave me all the paragraphs, but special nuclear materials

20 are uranium and plutonium?

21 MR. SHERR: Enriched uranium.

22 DR. APOSTOLAKIS: Enriched uranium and plutonium.

23 MR. SHERR: Right.

24 DR. APOSTOLAKIS: Okay.

25 MR. SHERR: And other materials as the Commission

1 may determine, which they haven't determined any so far,
2 since 1954.
3 The major activity that's going on in terms of
4 risk-informing activities in the fuel cycle area -- and I
5 guess maybe it's worthwhile to just step back a second, when
6 we say fuel cycle area, what we mean.
7 The regulations and their development would apply
8 to essentially the existing fuel cycle fuel fabrication
9 facilities. They will also apply to the plutonium mixed
10 oxide facility that's currently planned, and we expect to be
11 receiving a license application before too long. So, those
12 are the facilities that are immediately expected to be
13 subject to this regulation.
14 This rulemaking has been going on for quite a long
15 time. It was initiated at the Commission's request in 1993,
16 and we are nearing the final stages. The final rule package
17 is due to the Commission within the next couple of weeks,
18 May 15th.
19 In fact, when I leave here, I'm going to go back
20 and try to get the package out of the office.
21 In parallel with this effort is an effort that's
22 directed to revising the oversight program, similar to what
23 has been done in NRR for the reactor area, and this program
24 is also directed to make a more risk-informed perspective in
25 terms of the inspection program.

1 First slide.

2 There's two events that occurred that affect the -
3 - significantly the current rulemaking.

4 One was in 1986, the Sequoyah Fuels accident, and
5 that didn't directly affect this rulemaking other than the
6 fact that it raised the issue in terms of is NRC responsible
7 for chemical safety as well as radiological safety, and
8 there was a lot of discussion about this, congressional
9 hearings, and the result of all that was a memorandum of
10 understanding between the Nuclear Regulatory Commission and
11 OSHA which limited NRC's responsibilities in terms of
12 responsibility for chemical consequences and protecting
13 against them but, at the same time, identified certain
14 responsibilities.

15 This rulemaking addresses those responsibilities,
16 and later on, when Dennis is talking about the performance
17 requirements of the rule, you'll see how it does that.

18 DR. GARRICK: It should be pointed out, of course,
19 that this UF-6 release fatality was not a radiation
20 fatality.

21 MR. SHERR: No, that's right, and that was the
22 controversy at the time, which agency should have done
23 something about this type thing, and there was a lot of
24 different views on that and a lot of pointing different
25 directions.

1 In 1991, there was a near criticality incident at
2 one of the fuel fabrication facilities, and following that,
3 there was a significant review that was conducted, and a lot
4 of problems were identified with the way safety programs
5 were being implemented at facilities.
6 It wasn't that they were inadequate, but one
7 didn't have the confidence that they were always going to be
8 maintained.
9 Basically, the fuel cycle licensing approach was
10 done on a renewal-to-renewal basis, and whatever changes
11 happened to the safety program between renewals was outside
12 the oversight of NRC, and how well there was control in
13 between time varied depending on the specific circumstances,
14 and the particular situation at the facility where they had
15 the near criticality incident, there was a case where
16 controls were changed, and so, there was a clear need for
17 better configuration management.
18 As I said, in 1993, the Commission -- after a few
19 other things were done, the Commission said it's time to
20 pursue a rulemaking at essentially -- they didn't use these
21 terms in those days but essentially with a focus on the
22 conduct of an integrated safety analysis which had as part
23 of that -- as I say, they didn't use this terminology, but
24 risk-informed, performance-based rule.
25 DR. APOSTOLAKIS: Now, at that time, I guess, the

1 terminology was different, too, because today we would not
2 say increased confidence in margin of safety, we would
3 simply want some risk acceptance criteria, wouldn't we, Tom?
4 That's really what it means. If you are quantifying risk,
5 you want some risk goals.
6 MR. SHERR: Yeah.
7 DR. APOSTOLAKIS: Yeah.
8 MR. SHERR: Yeah. And that's exactly what the
9 rule does, and that will be a significant part of the
10 presentation as you -- if you've looked ahead in any of the
11 view-graphs, we'll be discussing those risk goals.
12 But the integrated safety analysis is essentially
13 a systematic review of the hazards and a means for
14 identifying controls.
15 I brought with me the definition. I'm not sure
16 it's in any of the material that you have, and it's defined
17 in the proposed rule as a systematic analysis to identify
18 facility and external hazards and their potential for
19 initiating accident sequences, the potential accident
20 sequences, their likelihood and consequences, and the items
21 relied on for safety.
22 So, basically, it's a systematic safety analysis
23 where it simultaneously considers the radiological nuclear
24 criticality, fire, and chemical safety hazards.
25 DR. GARRICK: What is that you're defining?

1 MR. SHERR: Integrated safety analysis. That's a
2 inherent part of the whole rule and the focus.
3 From the -- just to give a little -- I'm not sure
4 how familiar you are with the fuel cycle industry as
5 compared to the reactor part of the industry, but it's
6 worthwhile to note two significant differences between the
7 fuel cycle and the reactor area.
8 One is that the fuel cycle facilities have diverse
9 processes. The equipment varies from facility to facility.
10 It's not where, if you've gone to one reactor of one type,
11 it's pretty much the same as the next one in terms of
12 general equivalence-type thing.
13 The other thing is that it's a less contained
14 environment.
15 There are a lot more administrative actions and,
16 accordingly, administrative controls that are involved as
17 compared to engineering controls, and these things affect
18 both the database that might be available in terms of
19 equipment reliability, as well as the ability to quantify
20 the effectiveness of controls, the administrative controls.
21 Next slide, please.
22 In terms of the major elements of the rule, as we
23 mentioned, the focal point of the rule is the requirement
24 for licensees to conduct an integrated safety analysis,
25 which we referred to as ISA.

1 As I mentioned, the integrated safety analysis
2 essentially identifies the accident sequences of concern,
3 and for each one of those accident sequences, identifies the
4 items relied on for safety that will either prevent that
5 accident from happening or to sufficiently mitigate its
6 consequences so it is reduced in terms of the level of
7 concern.
8 DR. APOSTOLAKIS: So, how is the ISA different
9 from a PRA?
10 MR. SHERR: Well, I think, in overall concept,
11 it's the same, and in fact, PRA -- a PRA is one example of a
12 methodology that could be used, and using event trees is
13 certainly what we would expect for complex processes, and I
14 think the biggest difference -- and this will be an issue
15 that Dennis will be talking about later -- has to do with
16 the degree of quantification that we expect from the
17 process.
18 DR. APOSTOLAKIS: In order to avoid the
19 proliferation of terms, why can't we just call it, then, a
20 PRA and then define different types of scope where in some
21 instances perhaps you don't want to go into detailed
22 quantification and in others you do?
23 I mean we already have level one, two, and three
24 for reactors which are PRAs of different scope. One stops
25 at the core damage event, the other proceeds to containment,

1 and the third one is, you know, the full PRA with risk
2 estimates.
3 MR. SHERR: Yeah.
4 DR. APOSTOLAKIS: I think it would be important to
5 harmonize terminology, don't you think?
6 MR. SHERR: Well, this terminology has been used
7 in the fuel cycle area now for quite a number of years. A
8 number of licensees already have license conditions to be
9 conducting ISAs.
10 They're not geared to any particular performance
11 standards that the rule would establish, but that's an open
12 question, I guess.
13 DR. GARRICK: What you're really saying is that
14 the ISA can be -- can embrace either a deterministic
15 approach or a probabilistic approach. Is that right?
16 MR. SHERR: Well, it can use quantifiable ways of
17 assessing likelihood or less quantifiable ways of assessing
18 likelihood, and as I was saying, Dennis is going to be
19 addressing that particular aspect, and I think that's the
20 major difficulty in dealing with the fuel cycle facilities,
21 is that it's much more difficult to do a quantified safety
22 analysis.
23 DR. APOSTOLAKIS: But then if you don't do that,
24 how can you demonstrate that you have increased confidence
25 in the margin of safety? What metric would you use for the

1 margin of safety, or will it be qualitative and say, gee, I
2 have an extra barrier, so I have increased confidence? Is
3 that really what it is?
4 MR. SHERR: Dennis?
5 We're skipping into the more detailed part of the
6 presentation.
7 MR. DAMON: Well, my own impression about the
8 increased margin of confidence and safety is not really the
9 assessment of risk.
10 It is the fact that the knowledge both of the
11 plant staff and of the NRC staff as to what actually you
12 have in the way of a safety design was not very complete,
13 not well documented, not analyzed systematically.
14 Consequently, if you ask somebody the question,
15 what is the risk of this facility, they say, well, I think
16 it's okay, but I'm not very confident.
17 It's the second order of uncertainty. The word
18 "uncertainty" has been mentioned many times here. It's the
19 uncertainty level that was high.
20 DR. GARRICK: It sounds like what you're
21 attempting to do here is to provide more flexibility in the
22 rule than you think would be provided if you used the words
23 "PRA."
24 MR. SHERR: That's true.
25 MR. DAMON: Right. Because the rule, as you will

1 see, is mandating things. It's not like PRA has been used
2 elsewhere as a form of information for guidance. It's a
3 requirement that they do certain things.
4 DR. GARRICK: Clearly, a PRA would be an
5 acceptable ISA.
6 MR. DAMON: Yes.
7 MR. SHERR: Clearly.
8 DR. GARRICK: I'm with George. I don't quite
9 understand why we went in that direction, but I'm not sure
10 wed can do much about that at this point, and I am
11 sympathetic a little bit, because this evolved with time,
12 before probabilistic analyses was really a part of the
13 process.
14 DR. APOSTOLAKIS: That reminds of the individual
15 plant examination situation, where, when the generic letter
16 was published in 1988, they deliberately avoided the word
17 "PRA," because some people were arguing that you could do
18 this, you could identify the vulnerabilities using other
19 ways, other methodologies.
20 Now, six, seven years later, we got all the IPEs,
21 and there wasn't a single one that did not use PRA. So, the
22 reality of it was that, really, the generic letter asked for
23 a PRA, at least a level one PRA.
24 Is that correct, Tom?
25 DR. KRESS: Yes.

1 DR. APOSTOLAKIS: Your impression, too?
2 So, why perpetuate these things?
3 There is some fear, I guess, when it comes to PRA,
4 that people will have to produce an 11-volume document with
5 all the details in reactors.
6 I mean if you don't have a system that has the
7 highly redundant and diverse systems of a nuclear power
8 plant, your PRA will be much simpler, but it will be a PRA.
9 I mean the reason why those event trees go around
10 the room is that, in reactors, you have all these, you know,
11 redundancies and opportunities for operators to intervene
12 and do things and so on.
13 If you didn't have those, then maybe one page
14 would be enough.
15 But it's a matter of scope.
16 You know, I appreciate the fact that, you know,
17 these words have been used already in the regulations, but
18 at some point we have to start creating some harmony.
19 DR. GARRICK: What I guess you're telling us is
20 that integrated safety analysis is more of a process than a
21 prescriptive analytical activity.
22 You don't -- we'd get real concerned if it was so
23 prescriptive that it was something very different from a PRA
24 or precluded a PRA being an acceptable form or an acceptable
25 interpretation of an integrated safety analysis, but it

1 sounds like you've accommodated that.

2 DR. APOSTOLAKIS: In some instances, the way I

3 understand it, the ISA would allow you not to calculate the

4 consequences, just scenarios, and in other instances, it

5 would not even ask you to produce probabilities, but in

6 other words, you take the complete triplet, and instead of

7 subtracting things, for some reason, which remains to be

8 determined --

9 DR. GARRICK: That's why they call it safety and

10 not risk.

11 DR. APOSTOLAKIS: Yeah. But the idea is there.

12 It's the same thing, really.

13 DR. GARRICK: Yeah.

14 MR. DAMON: Part of the reason why there's a

15 difference in terminology is historical, the methodology of

16 all -- not from NRC groups but from the chemical industry.

17 DR. GARRICK: Right. We understand that.

18 DR. APOSTOLAKIS: But even when they borrowed our

19 PRA, they called it QRA.

20 MR. HORN: Maybe we could introduce that.

21 DR. APOSTOLAKIS: Yeah.

22 MR. SHERR: The ISA guidance document that has

23 been developed weighs heavily on the chemical industry

24 guidance document for hazards analysis, which, as you say,

25 includes a broad spectrum of specific approaches.

1 DR. APOSTOLAKIS: But again, you know, let's not
2 be in awe of that. The truth of the matter is we're ahead
3 of them when it comes to safety issues. I mean that's the
4 truth. We are actually quantifying risk.
5 So, the fact that the chemical industry is doing
6 that doesn't mean anything to me.
7 DR. GARRICK: I think we ought to hear out their
8 story, and I have some of the same anxieties, but I believe
9 history has put us where we are, and to try to undo it would
10 be quite difficult.
11 DR. APOSTOLAKIS: I appreciate your position. I'm
12 just saying that maybe it's time we started thinking --
13 DR. GARRICK: I'd feel much better if, everywhere
14 I see ISA, I can put PRA.
15 DR. APOSTOLAKIS: Yeah, as long as we understand
16 that the scope may be different depending on the situation.
17 DR. GARRICK: Because it's not risk-informed if we
18 don't deal with the triplet, as George says.
19 DR. APOSTOLAKIS: That's right.
20 DR. GARRICK: Okay.
21 MR. SHERR: So, the ISA identifies the basic
22 controls that are either going to prevent or mitigate --
23 prevent the accidents or mitigate their consequences, and in
24 addition, the rule requires the facilities to maintain
25 management measures that ensure that the items relied on for

1 safety are, in fact -- will be, in fact, available and
2 reliable, and essentially, the bottom line of the rule says
3 that the results of your ISAs has to demonstrate that the
4 performance to the requirements of the rule be satisfied.
5 DR. APOSTOLAKIS: So, let's see now what that
6 means. Are you going to talk about it later?
7 MR. SHERR: Yes.
8 DR. APOSTOLAKIS: Okay.
9 MR. SHERR: Very shortly.
10 DR. APOSTOLAKIS: It's too prescriptive.
11 DR. GARRICK: Well, one of the things I notice in
12 the material that we were supplied, which was the rule,
13 etcetera, it says that -- and maybe we don't need to go
14 through all of this -- there are four major steps in
15 performing an ISA, and to deal with one of the questions
16 that George raised, step number three says determine the
17 consequences of each accident that has been identified for
18 an accident with consequences at a high or intermediate
19 level, as defined in the regulation, the likelihood of such
20 an accident must be shown to be commensurate with the
21 consequences as required in 10 CFR 70.61.
22 So, you've got it all mixed in here, which even
23 makes more for the case of why ISA, why not just PRA, but
24 anyway, I think we understand where you're going.
25 MR. SHERR: Well, I think the important thing is -

1 - I mean without regard to what we've called the terminology
2 -- is that the performance requirements are in terms of
3 risk. They're saying the risk needs to be limited, and as
4 Dennis will be going into more detail, we've identified two
5 categories, high consequence and intermediate consequence
6 events, and essentially the requirements for high
7 consequence events -- they have to be highly unlikely, and
8 intermediate consequence is unlikely, and those terms are
9 not defined in the regulation, they're discussed in the SRP,
10 and again, that's part of the detail.
11 DR. KRESS: What do you do with the consequence
12 events that are in between those two?
13 MR. SHERR: That are below those?
14 DR. KRESS: Fifty rems.
15 MR. SHERR: They're mutually exclusive.
16 DR. KRESS: Oh, I see.
17 MR. SHERR: But it's just a question of what's
18 below those levels, and that's treated as part of Part 20
19 requirements.
20 Part 20 still comes into play. This is only
21 dealing with the accident.
22 DR. APOSTOLAKIS: What's the limit for workers at
23 reactors? Is it 100 rem? It's 25, isn't it? Five rem.
24 So, why is this 100?
25 Let's go back to the --

1 MR. SHERR: Actually, Dennis skipped ahead here.
2 DR. APOSTOLAKIS: Yeah. Dennis doesn't know us
3 very well.
4 Okay.
5 So, for workers, it's 100 rem or more. I don't
6 understand that. Must be highly unlikely.
7 MR. DAMON: These are accident risks. I mean the
8 5 rem is an occupational dose.
9 DR. APOSTOLAKIS: Oh, so, this is accident.
10 MR. DAMON: These are accidents.
11 DR. APOSTOLAKIS: So, you are requiring, then,
12 accidents that lead to this dose to be highly unlikely.
13 Okay.
14 DR. KRESS: Now, suppose I have an accident that's
15 projected to cause 1,000 rems. Is my definition of highly
16 unlikely the same as for 100 rems?
17 MR. SHERR: Theoretically, yes.
18 DR. KRESS: That seems a little strange to me.
19 DR. GARRICK: It's highly, highly unlikely.
20 DR. KRESS: I would want some gradation in that.
21 MR. DAMON: That's a good question which I don't
22 think could be answered outside of a court of law.
23 What I did in the Standard Review Plan when it
24 came to that exact point is I said, because that upper
25 category is open-ended on the upper sign, that whatever

1 guideline -- the guidelines that were developed in the
2 Standard Review Plan as to how to judge whether something is
3 highly unlikely or not were addressed to the typical type of
4 accident that would occur in that group, but it made a
5 warning statement that if your accident is substantially
6 above or below this typical case, then the likelihood has to
7 be scaled accordingly.
8 DR. KRESS: So, you did deal with that as
9 qualitative.
10 MR. DAMON: Yes.
11 So, I'm claiming, as a member of the staff, that I
12 can interpret that in a flexible way.
13 Now, whether that would stand up, you know, I
14 don't know.
15 DR. KRESS: That looks like a bit of a problem to
16 me.
17 MR. DAMON: It was considered early on as to
18 whether to put additional categories, but then you get into
19 the thing and you'd end up having some kind of complementary
20 cumulative distribution in the rule or something.
21 DR. KRESS: Well, I'm not so sure that's a bad
22 idea. You know, that might be a good way to cover the whole
23 spectrum.
24 DR. APOSTOLAKIS: So, what's the third category?
25 Is there a category -- we have highly unlikely, unlikely,

1 and expected?

2 MR. DAMON: What Ted was saying is, if you look at

3 the criteria for unlikely, you could be below that. You

4 could have an accident that produced effects below that, and

5 that accident is not addressed by the requirement that's

6 stated here, it's just left, and that's actually a risk-

7 informed aspect of this.

8 There was a deliberate decision that accidents at

9 that level weren't worth the effort to impose a requirement

10 to analyze.

11 DR. APOSTOLAKIS: What is the dose limit for

12 routine activities? Is that five? For workers. Okay.

13 MR. DAMON: So, there is a window there.

14 MR. MARKLEY: George, this is that special planned

15 exposure category that I was telling you about this morning,

16 25 rem or better.

17 MR. SHERR: The last overview point was just the

18 fact that, when this rule goes into effect, the completion

19 of the integrated safety analyses and implementation of the

20 controls at the facilities to satisfy the performance

21 requirements will need to be implemented within four years

22 of the rule is published, which we're hoping will be late

23 this summer.

24 And with that, I'm going to let Dennis then go

25 into the more detailed parts of the performance

1 requirements.

2 MR. DAMON: My name is Dennis Damon. As Ted

3 mentioned, I, up until recently, worked for him in this area

4 and other areas, and now I'm in the NMSS risk group,

5 addressing risk-informed regulation.

6 DR. GARRICK: We've heard of that.

7 MR. DAMON: Again, the purpose of this -- doing an

8 ISA is not the same as a risk assessment. It is a

9 regulatory mechanism, as opposed to an attempt to assess

10 what the risk is.

11 It's an attempt to induce the licensees to do

12 systematic safety analysis, identify what they're relying on

13 for safety, and make a determination that it's adequate, and

14 it's based on the OSHA process hazard analysis concept

15 that's been implemented in their domain and for which they

16 have about 100,000 licensees which they require do this type

17 of analysis, and it's mostly qualitative.

18 Occasionally, people will do what is a PRA, and

19 these -- so, the attempt to bring a risk structure into this

20 ISA is to specifically ask that consequences and likelihood

21 be addressed separately and in the manner that it's

22 described here, and that is to ask that all the accidents

23 identified in the ISA -- that the consequences be calculated

24 and determine whether they are -- in which one of these

25 categories they are, below unlikely, unlikely or -- these

1 are also referred to as intermediate consequence and high
2 consequence.
3 So, the accidents that are identified are going to
4 be determined to be in one of these categories by
5 quantitative calculation, but then, likelihood -- we do not
6 expect the current licensees to, in general, quantify
7 likelihood when they take the next step, which is to
8 determine whether it's highly unlikely or not.
9 DR. APOSTOLAKIS: You do not expect them to
10 quantify it.
11 MR. DAMON: We do not.
12 One of the reasons the word "PRA" wasn't used -- I
13 mean it's used in the Standard Review Plan. There's a
14 statement in there that it is one acceptable way of doing
15 things, of meeting the rule, but the licensees vigorously
16 resisted.
17 DR. APOSTOLAKIS: Do you think that people will
18 have a common understanding of what a highly unlikely
19 sequence is?
20 MR. DAMON: No, and that's why, in the Standard
21 Review Plan, I attempted to provide some guidance to our
22 staff reviewers and, indirectly, to the industry as to what
23 we believe.
24 DR. APOSTOLAKIS: I don't remember that. Can you
25 give me some idea of where that guidance is?

1 MR. DAMON: The Standard Review Plan is -- it's
2 not here.
3 Along with the rule, there's a Standard Review
4 Plan for reviewing the license application or an ISA summary
5 when it comes in, and in there, there's a chapter on ISA.
6 Chapter three is on ISA.
7 In that chapter, it will have -- it has acceptance
8 criteria for likelihood.
9 In other words, there will be a likelihood
10 evaluation done by the licensees as a required element of
11 the ISA.
12 So, they will submit what they think highly
13 unlikely means, and in the Standard Review Plan chapter, it
14 says what we think it means.
15 DR. APOSTOLAKIS: So, is there a place where it
16 says clearly highly unlikely is this?
17 MR. DAMON: If you look --
18 DR. APOSTOLAKIS: Yeah.
19 MR. DAMON: -- in the slides --
20 DR. APOSTOLAKIS: Oh, yeah, you are quantitative,
21 on 3.0-28. Highly unlikely, a frequency of less than 10 to
22 the minus 5 per accident per year. So, with tears in your
23 eyes, you're back to PRA.
24 MR. DAMON: Yes. Yes, that's right.
25 DR. APOSTOLAKIS: And then unlikely is a frequency

1 of less than 10 to the minus 2 but more frequent than 10 to
2 the minus 5 and not unlikely -- I guess that's likely -- is
3 more frequent than 10 to the minus 2. So, you are becoming
4 quantitative.
5 MR. DAMON: Yes, right. There's quantitative
6 guidance in there, and in fact, in the section -- the more
7 recent version of the Standard Review Plan is slightly
8 different than what's there, because it was recognized that
9 the number of accident sequences that are identified in
10 these ISAs is under the control of the analyst, he can
11 partition his trees more finely or more coarsely, and so, to
12 preclude playing games with what's the frequency per
13 accident sequence, which is the way the rule is stated --
14 the rule is explicitly stated, it's each event must be
15 highly unlikely, and so, to preclude that game-playing, the
16 guidance says that you divide by the total number of
17 accidents in the entire industry to figure out what's an
18 acceptable number.
19 DR. APOSTOLAKIS: Divide by the total number of
20 accidents?
21 MR. DAMON: You can imagine all the different ways
22 you could do this, and I thought of them, and there's no
23 easy solution to the situation of proposing a risk goal
24 unless you do it cumulatively, and then you have to be
25 quantitative.

1 DR. GARRICK: It seems that we are kind of playing
2 games here.
3 It seems, by the time you do a good job of
4 answering the questions that you're asking in the rule, you
5 have built the basis for a risk curve.
6 DR. APOSTOLAKIS: That's correct.
7 DR. GARRICK: You have your CCDF. All you need to
8 do now is decide what the uncertainties are.
9 But it's kind of strange that we're in this
10 situation where we have to dance around PRA so much because
11 of the stigma associated with it, or for some other reason,
12 and call it other things.
13 There's no way you're going to be able to
14 convincingly analyze a chemical plant and answer these
15 questions without essentially having the critical points on
16 a CCDF, is there?
17 MR. DAMON: Well, I tend to agree that, in many
18 cases, you will look at a case that's being analyzed and you
19 won't be able to decide, you know, whether it's highly
20 unlikely or unlikely without doing something quantitative,
21 but --
22 DR. GARRICK: I also get very nervous when we
23 start talking about separating consequences from likelihood.
24 Most times when we do that, we get in trouble,
25 because we get consequences out there which people pick up

1 as if they're not unlikely, and the one advantage of a risk
2 form for the results is that you can't do that. The risk is
3 -- combines the two and forces consideration of them in
4 combination.
5 But anyway, we're a bit late in our commentary on
6 this.
7 But it does have some underlying problems that
8 indicate that there's still a long ways to go in the whole
9 arena of risk communications before we can make the
10 transition that is a clear algorithm for becoming risk-
11 informed.
12 MR. DAMON: They do, in fact, use PRA on fuel
13 cycle facilities in Europe.
14 DR. GARRICK: I know.
15 DR. APOSTOLAKIS: Where?
16 DR. GARRICK: In Europe.
17 DR. APOSTOLAKIS: No, even here. I was reviewing
18 some PRAs that were done for DOE 10 or 15 years.
19 DR. GARRICK: Yeah, DOE did a PRA on the ICPP, the
20 chemical reprocessing plant.
21 DR. APOSTOLAKIS: It was a PRA.
22 DR. GARRICK: Yes, it was a bona fide PRA.
23 DR. APOSTOLAKIS: John, you said we are late.
24 What stage is this at now?
25 You're sending it up when?

1 MR. SHERR: We've gone through the proposed rule
2 process, and the rule is due to the Commission May 15th.
3 The final rulemaking package is due to the Commission May
4 15th.
5 DR. APOSTOLAKIS: You've been through the public
6 comment period and everything?
7 MR. SHERR: Yes.
8 DR. APOSTOLAKIS: Wow. Why are we involved so
9 late? We don't exist before. Did the ACNW have a chance to
10 review it?
11 DR. GARRICK: No.
12 DR. APOSTOLAKIS: No?
13 MR. HORN: I suppose we all had a chance to review
14 it if it was out for public comment, but we didn't do it.
15 DR. APOSTOLAKIS: Well, that's something for us to
16 discuss.
17 DR. GARRICK: Yes, I think so.
18 Carry on.
19 MR. DAMON: This is one point that should be made.
20 The jurisdiction of the NRC is restricted to certain things.
21 Not all chemical accidents are within our jurisdiction to
22 address in this rule, so it's only certain things.
23 The ISA -- the rule defines this term, "item
24 relied on for safety," and it's important to recognize why
25 the different terminology was chosen. It's because most of

1 the things relied on for safety in these plants are
2 procedural. They're what we call administrative controls.
3 There is hardware involved, but it's usually hardware
4 operated by somebody.
5 DR. GARRICK: But Dennis, is the NRC worried about
6 anything other than radiation risk?
7 MR. DAMON: Yes, chemical death or health effects
8 due to chemicals.
9 DR. GARRICK: I know they are, but I mean really.
10 The foundation of the regulations --
11 MR. DAMON: In these plants, yes. Like Ted was
12 saying, the only person that's been killed in an NRC plant
13 regulated in the fuels materials area was a chemical death.
14 DR. GARRICK: Yes.
15 MR. DAMON: And so, we are concerned about it for
16 that reason.
17 There are many different things that could go
18 wrong and kill somebody in the plant.
19 MR. MARKLEY: Even the radioactive materials are
20 more chemically toxic than they are radioactively in a lot
21 of cases.
22 MR. DAMON: So, it is a real concern. We've hired
23 chemical engineers and chemists and we're seriously
24 concerned about chemical safety in these plants for the
25 things within our jurisdiction.

1 Of course, the other radiological hazard is having
2 a criticality event, which is -- you know, in light of
3 Tokai-Mura, that's a real thing, too.
4 DR. APOSTOLAKIS: Do these ISAs exist now? Have
5 they done them?
6 MR. DAMON: Yes. There six, seven fuel cycle
7 facilities.
8 DR. APOSTOLAKIS: They have done these ISAs?
9 MR. DAMON: What happened was the staff attempted
10 to get -- when it was determined that they wanted the
11 licensees to do them the staff tried to get the licensees to
12 do it without a rule, and some agreed to do them and some
13 point blank refused. So, some have done them.
14 Only one of them has really done it to near
15 completion, and that's BWXT, which is a naval fuel
16 fabricator.
17 DR. APOSTOLAKIS: And that will be submitted to
18 you or has been submitted?
19 MR. DAMON: It has been submitted, but it's been
20 disguised.
21 It was submitted as what's called a Chapter 15 of
22 their license application, which is a description of their
23 plan, but it actually is a summary of their ISA.
24 DR. APOSTOLAKIS: I wonder whether a way around
25 the problem we're facing here is to recommend to the

1 Commission to issue a -- can they issue generic letters in
2 this area and ask for identification of vulnerabilities and
3 let the industry then discover by itself that they really
4 need a PRA?
5 MR. MARKLEY: That's what they did with 88-20,
6 George.
7 DR. APOSTOLAKIS: For reactors.
8 MR. MARKLEY: Yeah.
9 DR. APOSTOLAKIS: So, what I'm saying is would it
10 make sense to recommend something like this here, because
11 unless you do it, you will never be convinced that you need
12 a PRA.
13 So, you will ask them to identify vulnerabilities
14 and let them do it any way they like, and eventually they
15 will all do a mini-PRA.
16 Then we will not try to derail this.
17 DR. GARRICK: Just as a matter of curiosity, do we
18 have a sense of the scope of the six or seven ISAs? Are
19 these --
20 MR. DAMON: Yes. I mean I'm familiar with how
21 much they've done.
22 DR. GARRICK: Are these 10 man-year studies or one
23 man-year studies or what are they?
24 MR. DAMON: I would say that the BWXT one is
25 easily up in the 10 man-year category, and most of the rest

1 of them will be approaching that.

2 DR. APOSTOLAKIS: Is it because they are doing it

3 for the first time?

4 MR. DAMON: I think it's a couple reasons.

5 One of them is the number of processes for which

6 you have to do analysis.

7 Instead of a single machine, you know, reactor

8 that's basically a fairly simple machine, they have -- like

9 a typical plant might have 100 different processes, and each

10 one of them is a unique piece of machinery that has its own

11 design and own safety design.

12 So, just the sheer number of things they have to

13 analyze is one factor.

14 The other one is that they -- you have to do it

15 with a team -- a chemical expert, a criticality expert, a

16 PRA-type expert.

17 By the time you're done, you've got four or five

18 people sitting there working on this simultaneously. So, it

19 tends to be expensive.

20 DR. APOSTOLAKIS: I wonder whether this

21 subcommittee should actually spend a day on these things.

22 DR. GARRICK: Well, what I was thinking, George,

23 before we go too far on this, it might be very constructive

24 for us to get a presentation on one or two of these ISAs --

25

1 DR. APOSTOLAKIS: That's what I mean.

2 DR. GARRICK: -- a specific presentation of an ISA
3 and to get a more in-depth sense of just the nature of the
4 analysis and the depth of the analysis. That's something we
5 may want to talk about.

6 DR. APOSTOLAKIS: Yeah.

7 MR. DAMON: I thought about that before I came
8 here. I thought about bringing slides that showed some of
9 the -- extracted from some the existing ones, but they're
10 all -- they're classified as proprietary information, so
11 we'd have to address that somehow.

12 DR. GARRICK: Yeah.

13 DR. APOSTOLAKIS: Won't be the first time.

14 DR. GARRICK: Yeah. Right.

15 MR. DAMON: Yeah, I agree.

16 DR. GARRICK: What about the naval facility?

17 MR. DAMON: It's quite easy to find stuff that's
18 not classified. It's just they'd have to pick ones that
19 didn't have anything that they didn't want their competitors
20 to know about, maybe.

21 DR. GARRICK: Right. Well, I happen to know that
22 a few pieces of the Sequoyah Fuels facility was analyzed on
23 a probabilistic basis. So, there's pieces and parts of
24 probabilistic fuel cycle analysis around.

25 MR. DAMON: Right. For example, the NFS facility

1 in Irwin, Tennessee, a few years ago -- they wanted a
2 license amendment to have a process for down-blending
3 highly-enriched uranium down to reactor levels of
4 enrichment, and that's a hazardous operation, because
5 normally the way you assure safety is to make the geometry
6 of the piping and vessels small enough so that the high-
7 enriched won't go critical.
8 Well, they wanted to do it in a way where
9 eventually they're going to get to a geometry that would be
10 critical if they were high-enriched.
11 So, it was such a touchy thing -- they did a
12 quantitative PRA of that process design, but see, a lot of
13 these processes, the safety design is so incredibly simple
14 that even calling it an analysis is hard to do.
15 For example, like at BWXT, they fabricate metal
16 reactor cores for submarines, and the fabrication processes
17 are working with a big machine shop, they work with big
18 pieces of metal, and the typical way they assure criticality
19 safety is simply to have a rack that holds only so many
20 piece parts at a certain spacing, and that's what they work
21 out of.
22 They take the piece out of the rack, they work
23 with it, they put it back in the rack, and the rack is -- it
24 would probably take, you know, 10 times that much or six
25 times as much as in the rack to be capable of being critical

1 if you took it out of the rack and assembled it into a form.
2 So, it's just a sheer safety margin and the way
3 they work with things that they control criticality. As
4 long as people that are working there follow the rules, they
5 are very, very far from criticality, and so, you can see
6 it's a lot of human reliability, is what it is.
7 DR. GARRICK: I think one of the things that would
8 make a lot of us feel a lot better -- and I've read this to
9 some extent but not in great detail, because it's awfully
10 thick -- I'm talking about the rule -- is that if there was
11 more made of the fact that a PRA is an acceptable and
12 established approach for carrying out the integrated safety
13 analyses, the fact that that was totally, from what I read,
14 excluded, I think, is a missed opportunity.
15 MR. DAMON: Well, it certainly -- in the Standard
16 Review Plan, it's quite clear that it's not only an
17 acceptable way, it's -- in the area of identifying
18 accidents, there are statements made that, for a complex
19 process, fault trees should be used.
20 I mean our experience in reviewing the parts of
21 ISAs that have been submitted is that some of the licensees
22 attempt to analyze a system that clearly calls for fault
23 tree by a more simplistic technique that is too vague and
24 does not really explain what accidents can occur in the
25 process, and so, we have made it -- tried to make it clear

1 in the guidance that that's what's called for, and in fact,
2 NUREG 1513, which is the ISA guidance document -- it has a
3 flow chart in for selecting methodologies that would drive
4 one to choose a fault tree for an appropriate complex
5 process.
6 DR. APOSTOLAKIS: Do we have this NUREG?
7 MR. SHERR: It's part of the proposed rule
8 package.
9 DR. GARRICK: The guidance document.
10 MR. DAMON: ISA guidance.
11 DR. APOSTOLAKIS: The NUREG is here?
12 MR. SORENSON: It's in that package I sent you.
13 MR. DAMON: So, there's two guidance documents.
14 Actually, there's three, which I was going to get to.
15 There's the ISA guidance document, which primarily
16 addresses the overall architecture of an ISA and how you --
17 and all the different methods for identifying accidents,
18 like fault trees, event trees, what-if analysis, different
19 things.
20 Then there's the Standard Review Plan, with an ISA
21 chapter. That has acceptance criteria in it and suggested
22 format for presenting results.
23 The other one is NUREG 6410, which is the accident
24 analysis handbook, which is consequence evaluation methods
25 for fuel cycle facilities, both chemical and radiological.

1 DR. APOSTOLAKIS: There is something that is not
2 clear to me.
3 You mentioned that there is certain guidance in
4 the Standard Review Plan, so at least, you know, the
5 licensees will know where the stuff is coming from.
6 Isn't that the job of a regulatory guide? The
7 Standard Review Plan is for internal use. Is there a
8 regulatory guide here?
9 MR. MARKLEY: The Standard Review Plan is publicly
10 available, George.
11 DR. APOSTOLAKIS: It is publicly available.
12 MR. MARKLEY: The NUREG is available for the
13 licensees' use.
14 DR. APOSTOLAKIS: How come there is no regulatory
15 guide?
16 MR. SHERR: Historically, we have had a standard
17 format and content guide as a companion document to the
18 Standard Review Plan, and the decision was made at some
19 point that, in many respects, those two documents are
20 redundant and that the standard format and content guide
21 doesn't provide as much detailed information.
22 So, basically, the Standard Review Plan is also -
23 - serves also as a standard format and content guide.
24 DR. APOSTOLAKIS: Does NMSS issue regulatory
25 guides?

1 MR. SHERR: Yes.

2 DR. APOSTOLAKIS: But in this case, the Standard
3 Review Plan really plays that role.

4 MR. SHERR: Yes.

5 MR. DAMON: Yes. That was an explicit decision.
6 I remember when they made it. They said, you know, we're
7 going to make the -- in fact, it's just a general policy not
8 to try to do this type of guidance with regulatory guides
9 but to either do it -- it's either in the Standard Review
10 Plan or it's a NUREG, one of those two.

11 MR. SHERR: The Standard Review Plan has been in
12 development for about as long as the rule has been in
13 development, since '93, and it was published as part of the
14 proposed rule, and in fact, we received more comments on the
15 Standard Review Plan than we received on the rule itself.

16 DR. APOSTOLAKIS: If it's been in development
17 since 1993, how come it hasn't been reviewed internally by
18 the ACNW? This is a rule.

19 MR. MARKLEY: I can't tell you how many iterations
20 it's gone through, George, and certainly I wasn't party to
21 the ACNW deliberations. I don't know what has happened and
22 what hasn't and when the opportunities were and weren't.
23 You might ask some other players where that occurred.

24 DR. GARRICK: Are you aware of anything, Rich?

25 MR. MAJOR: I'm not aware of anything. The ACNW

1 has not focused on fuel cycle facilities, especially fuel
2 fabrication plants.
3 DR. APOSTOLAKIS: I see.
4 DR. GARRICK: Our charter has changed. Our
5 charter certainly includes such facilities, and so, we're
6 not maybe keeping up with due process here.
7 DR. APOSTOLAKIS: Okay.
8 DR. GARRICK: But I am struck by the fact that,
9 when I look at SECY 99-147 and I look at the background
10 paragraph that talks about a near criticality incident,
11 etcetera, etcetera, has prompted the NRC to evaluate its
12 safety regulations for licensees that possess and process
13 large quantities of special nuclear material and so on and
14 so forth.
15 The staff concluded that, to increase confidence
16 in the margin of safety at a facility possessing this type
17 and amount of material, a licensee should perform an
18 integrated safety analysis, and then it goes on to say what
19 an ISA is, and no reference really to risk assessment in the
20 traditional sense.
21 So, this obviously has a chemical heritage to it,
22 and is quite separate from picking up on the NRC legacy of
23 advancing towards a risk-informed regulatory practice that
24 has been largely influenced by, to be sure, reactor
25 applications and more recently, performance assessment

1 applications of nuclear waste.

2 So, this middle ground here of large fuel cycle

3 facilities, fuel facilities and processing facilities and

4 UF-6 conversion facilities has kind of been in a vacuum as

5 far as getting lots of attention from either the ACRS on the

6 one hand or the ACNW on the other hand, and given that it's

7 rooted in the chemical field and that the chemical industry

8 has been driving it for the most part, it's gone a different

9 direction, and I don't think it's anymore complicated than

10 that.

11 But I think this has been very constructive. I

12 think this has helped us focus a little bit on an area that

13 maybe, you know, the advisory committees have --

14 DR. APOSTOLAKIS: So, you are responding to an SRM

15 dated December 1, '98. Is that really what this is?

16 MR. SHERR: No, I think it was July 8, '99. The

17 package you have is the proposed rule package. An SRM was

18 issued as a result of that on, I think, July 8th.

19 DR. APOSTOLAKIS: Of last year. But the whole

20 history started a long time ago.

21 MR. SHERR: It started in '91.

22 DR. APOSTOLAKIS: So, an extra two years wouldn't

23 hurt, would it?

24 Okay.

25 DR. GARRICK: All right.

1 Let's go ahead, if we haven't completely
2 disrupted.
3 MR. DAMON: I'll go through this very fast, and
4 then just stop me when you want to talk about something.
5 This is what an ISA does. It uses systematic
6 methods to identify hazards, namely just where in the plant
7 are there things that are hazardous, because that's --
8 again, remembering the roots of this, the problem was they
9 weren't addressing chemical safety at all at these plants.
10 They did not have any kind of documented chemical safety
11 analysis, controls, the NRC was not regulating it, and so,
12 we're trying to get a documented safety analysis on the
13 record here, first identify where are the hazardous
14 chemicals and the radiological materials, then do what we'd
15 be more familiar with, fault trees or whatever, identify
16 actual specific accident sequences, and identify the
17 consequences and the likelihood of those accident sequences,
18 and specifically, here's another item that we're interested
19 in, identifying items relied on for safety.
20 This may sound sort of strange to say a statement
21 like this, but if you go to a facility -- even if you look
22 at the old-style documentation that are nuclear criticality
23 safety analyses, which they've done for years, and you ask
24 yourself what things in this process are they relying on for
25 safety, very often, when I've gone and looked at them, they

1 are not documented.

2 They are relying on certain characteristics of the
3 process which is not in the documentation, and without that
4 characteristic -- in other words, you take the GE event. It
5 was a solvent extraction process, and the output from the
6 process went to a holding tank that was safe geometry, it
7 would be sub-critical under any conditions, and the tank was
8 relatively small, and what had happened is they increased
9 the throughput in the plant such that the operator was
10 having to empty that tank about every hour or so because it
11 was too small and would get filled up from the process.

12 Well, there's a big difference in the safety of
13 that -- and so, what they didn't understand was the safety
14 of that process depends on the demand rate, if the guy is
15 under a higher and higher demand rate until finally they had
16 a process upset which caused him to -- there was a control
17 valve malfunction in the process, and during the process
18 when that control valve was malfunctioning, he was still
19 transferring -- he had to transfer every hour the contents
20 of this tank, and so, the process design -- they didn't
21 realize it depended on the demand rate, and they needed to
22 lower the demand rate by increasing the tank capacity, and
23 that's what they did. After the fact, since '91, they've
24 built a lot of very, very, very large safe geometry tanks.

25 So, now they don't have to transfer every hour.

1 They can sit there and wait for days until they do a
2 transfer and make sure it's done right.
3 So, they don't understand what they're relying on
4 for safety, and it's the major thing that I think ISA will
5 accomplish here.
6 They will put it down in writing and they will
7 send us that list of what they're relying on for safety.
8 We've never had that before.
9 We have never had here in this agency a list of
10 what they're relying on for safety in their plants.
11 DR. APOSTOLAKIS: Which is really similar to what
12 the Commission did when the power industry was resisting
13 PRA. They asked them to find the vulnerabilities. Isn't
14 that another way of putting it? And then the industry
15 realized that the only way to do it was to use PRA. I mean
16 it was a hugely successful program from that point of view.
17 It spread the technology, really.
18 I mean the individual IPEs -- some of them are
19 really not very good, but you know, the learning process was
20 tremendous, and that's maybe what we need here.
21 MR. DAMON: Again, it's a -- like you say, it's a
22 process of them learning what they don't know by doing it.
23 DR. APOSTOLAKIS: Exactly. That's very useful
24 background, yes.
25 There is an interesting view-graph a little later

1 that says likelihood -- is that before or after where you
2 are -- likelihood, evaluation, acceptance criteria. I don't
3 know where we are now.
4 MR. DAMON: There's three different things that -
5 - when the staff receives an ISA summary to review, what
6 we're going to be looking for in there is the completeness
7 of identifying all the accidents, the correctness of the
8 consequence evaluations, and the adequacy of the method they
9 use and the criteria they use for judging that things are
10 highly unlikely or unlikely.
11 That guidance is in the Standard Review Plan
12 chapter.
13 The completeness is address by the -- for one
14 thing, the methodologies.
15 Do they use these methodologies that we've told
16 them to use in selecting it with a flow chart in NUREG 1513
17 and have they applied it each time to each process in a
18 correct manner, and of course, then, we'll have the staff
19 review the results and see if they think that they've picked
20 up on all the accidents.
21 NUREG 1513, like I say, is primarily focused on
22 identifying hazards and accidents. It's got methodologies.
23 It's based on the AICHE red book on complying with the OSHA
24 rule and has a flow-chart for selecting the correct process,
25 and it has a long list and includes actually quantitative

1 PRA as one method in there.

2 DR. APOSTOLAKIS: Yeah, but you know, I've seen
3 the what-if stuff. I mean it was presented to me as if it
4 was a big deal.

5 I think it depends very, very much on the hazards
6 you are talking about. In some instances, you know that the
7 hazards are not very large. Maybe a quick what-if analysis
8 is good enough. It's qualitative. You ask people,
9 knowledgeable people, what can happen here and there.

10 But in light of what this agency has done to
11 promote risk assessments and so on, this is really a trivial
12 Mickey Mouse kind of thing.

13 So, I am not sure that it should be one of the
14 acceptable methods, and the recommendations that come out of
15 it really are, again -- I mean if you're talking about a gas
16 station or something like that and you want to avoid
17 accidents, maybe it makes sense, but not for a facility that
18 has nuclear materials in it, and the hazards -- you know, I
19 mean they have been glorified by the chemical industry, and
20 for us, it's a starting point of a PRA.

21 I mean no PRA analyst will start doing PRAs
22 without doing some form of hazard first, you know, what if
23 this fails, what's going to happen, let me understand the
24 system, structuring the scenarios that we talked about
25 earlier.

1 MR. DAMON: Well, I think that the flow-chart in
2 NUREG 1513 -- that's what it's intended to address. It's
3 intended to prevent them from doing that, and I'm not sure
4 it's going to be successful.
5 We're going to have to arm-twist them into it.
6 We're going to have force them. The staff is going to have
7 to tell them you cannot do what-if on a complex process, you
8 know.
9 That's only appropriate for -- in fact, my own
10 view is it's really just a front-end, it's a screening,
11 brainstorming thing you do on the front-end, and then you go
12 ahead and you do your fault trees and event trees.
13 DR. APOSTOLAKIS: That's right. But this industry
14 is dominated by chemical engineers, isn't it?
15 MR. DAMON: Yeah, I would say mechanical and
16 chemical.
17 DR. APOSTOLAKIS: Yeah.
18 MR. DAMON: There are criticality engineers who do
19 the criticality safety, but they're primarily, you know,
20 reactor physics calculators.
21 They're not -- the discipline that is missing in
22 these plants, in my own opinion, is reliability engineers.
23 They do not have reliability engineering as a discipline in
24 any of these plants. They don't know the subject.
25 So, like I say, if you look at the rule, the

1 bottom line is consequences have to be understood
2 quantitatively. So, they do have to do calculations for
3 that.
4 There's a guidance document on it, this NUREG that
5 was generated a few years ago. It's a summary of the
6 current state of the art in methodologies for calculating
7 consequences, both chemical and radiological.
8 Really, when you look at what the consequence
9 levels are, the intermediate high defined in the rule, you
10 only need a gross estimate in order to figure out where
11 you're at, and then, to know whether you're highly unlikely
12 or unlikely is the appropriate category.
13 One of the things about this is -- about these
14 methods is a lot -- I would say most of the accident
15 sequences will be nuclear criticalities for which
16 consequence evaluation really doesn't need to be done.
17 It's clearly going to be a high consequence event
18 by definition in the sense that you can't preclude the fact
19 that someone might be standing there and might get killed.
20 Therefore, the process has to be protected at the level of
21 highly unlikely.
22 DR. APOSTOLAKIS: Now, let me understand what this
23 means.
24 The applicant defines -- you mean the applicant
25 will assess the frequency, qualitatively perhaps, of

1 sequences and declare them as unlikely or highly unlikely.
2 The applicant will not define what is unlikely the way you
3 do in the SRP. That's your job.
4 MR. DAMON: Right. Well, the way we refer to it
5 is he can establish a method which has criteria in it for
6 what constitutes highly unlikely in his view, and the staff
7 will then have acceptance criteria in the Standard Review
8 Plan as to whether we accept that criteria.
9 DR. APOSTOLAKIS: You mentioned in the SRP that
10 highly unlikely means 10 to the minus 5 or less.
11 Now, what if an applicant comes and argues that 10
12 to the minus 4 is still highly unlikely? Is that what this
13 means, defines?
14 MR. DAMON: Yes, it does.
15 DR. APOSTOLAKIS: This is kind of unusual, isn't
16 it? I mean this should be the job of regulator, what is
17 acceptable.
18 MR. DAMON: Yes. That's what I say. The Standard
19 Review Plan says what we regard as acceptable.
20 So, there's no point to them coming to us and
21 telling us 10 to the minus 4. We've already said --
22 DR. APOSTOLAKIS: So, the applicant really doesn't
23 define it.
24 DR. GARRICK: Likelihood has no relevance except
25 when associated with a particular consequence.

1 MR. MARKLEY: George, I don't think it's
2 appropriately defining; it's categorizing.
3 DR. APOSTOLAKIS: But that's my concern. Does the
4 word "define" mean categorize or actually define what's
5 acceptable, what's unlikely, high unlikely, because if it's
6 the second, I think it's the job of the NRC to do that, not
7 of the applicant.
8 In other words, the applicant should be assessing.
9 In other words, they should be saying yes/no.
10 MR. MARKLEY: I don't know that I agree with that,
11 George, because I mean I still think the licensee has the
12 obligation to determine it and the NRC the obligation to
13 confirm or determine whether they would agree or not.
14 DR. APOSTOLAKIS: But the applicant will never
15 tell you what's acceptable.
16 MR. DAMON: Let me clarify why you get in this
17 dilemma.
18 If we were doing it quantitatively, there would be
19 no -- if we were going to insist that things be done
20 quantitatively, there would be no question about, it would
21 be very simple.
22 DR. APOSTOLAKIS: Yes.
23 MR. DAMON: But since what we anticipate is that
24 they won't do it quantitatively, what they'll do is do it
25 qualitatively, if you try and define a scheme by which

1 they're going to categorize controls by their qualities,
2 they're going to have to explain to us what this scheme is
3 by which they're going to evaluate something and say, yes,
4 this is highly unlikely because it has this characteristic,
5 this characteristic, this characteristic, therefore it's
6 highly unlikely.
7 DR. APOSTOLAKIS: But that's an assessment, that's
8 a categorization.
9 MR. DAMON: Yeah, it's a categorization, right.
10 DR. APOSTOLAKIS: That is okay.
11 MR. DAMON: And we're going to ask them to do this
12 categorization and then tell us which ones of these do you
13 consider to be highly unlikely. It's a misleading term.
14 The natural interpretation is it should be a number. So,
15 they're going to develop some kind of method.
16 I've divided the potential methods into three.
17 They could do it quantitatively. He could do a PRA, and
18 they could, therefore, define a likelihood by a frequency
19 per year or some analogous quantitative measure. The other
20 extreme is purely qualitative by the characteristics of
21 whatever the process design is.
22 The one in between is the BWXT method, the method
23 they used, which one way of describing it is to say it's an
24 order of magnitude, a quantitative, or you could say it's a
25 qualitative method that assigns index values to likelihood.

1 DR. GARRICK: They do a lot of this in the marine
2 field, as well, particularly in the offshore. They use
3 exactly the same language, and they have relied heavily on
4 what they call indexing methods, and the UK rules that have
5 come out with respect to safety case requirements for
6 offshore platforms have adopted a kind of a similar set of
7 descriptors and terms, and all of that does have its roots
8 in the chemical industry.
9 MR. DAMON: As I said, this index method is the
10 method that BWXT used, and it's what we would like the
11 others to use. It remains to be seen if they will do it.
12 One of the problems has been, as I said, BWXT's
13 submittal is proprietary. They, in fact, wouldn't even
14 submit their methods document.
15 So, I don't even know the scheme that they used,
16 all I have is the results, and so, when they -- of course,
17 that will change when the rule goes into effect, I can
18 demand the methods document, but they were very tight-fisted
19 about this, and fortunately, it seems to be getting away
20 from that.
21 They seem to be working through NEI, working
22 together more, or maybe they're going to iron this out and
23 they will come to use BWXT's method.
24 Like I said, a quantitative method is not
25 required, but it's permitted, and that's the way it's stated

1 in the Standard Review Plan.

2 This index method is the one that's actually been

3 used.

4 DR. GARRICK: It would be much better there if you

5 said that it's encouraged, because saying permitted makes it

6 come across as a inferior method to the other methods.

7 MR. SHERR: It is sort of encouraged in the sense

8 of what the Standard Review Plan identifies as an example is

9 this semi-quantitative approach, and so, in that way, that's

10 the only thing that we've identified so far.

11 The industry has been saying they would like us to

12 develop another example that's purely qualitative, and we've

13 been struggling with that.

14 DR. GARRICK: Well, what they're going to discover

15 is the same thing that the NRC discovered when they started

16 out with their IPE program thinking that -- and justifying

17 it principally on the basis that it was less cost, and they

18 have ended up with models that are at greater cost than the

19 kind of full-scope PRAs that were being advocated in the

20 late '70s and early '80s.

21 They'll just make the same discovery eventually,

22 that the best way to do this is, in fact, to build a

23 quantitative model and to be creative about how they build

24 that model in order to achieve the cost control that they

25 want and that all of this other stuff will hopefully go by

1 the wayside, because it's just a way of dancing around and
2 avoiding hitting it on all fronts.
3 NASA has gone through the same thing. They have
4 resisted probabilistic methods from 1959, from the time that
5 GE presented a calculation that found its way in Congress
6 that the probability of getting a man to the moon and back
7 was something like 5 percent, and they got embarrassed by
8 it, and the then-administrator said we will never use
9 probabilistic methods again.
10 Well, they're using probabilistic methods, and
11 they're using them increasingly extensively, and eventually
12 they'll come around.
13 There is now a risk model for the shuttle, and so,
14 unfortunately, it seems to be the way that it has to go,
15 that everybody has to satisfy themselves that they have
16 another way, and I think that, until you answer the risk
17 question, you know, you've not answered the margin question.
18 MR. DAMON: I agree, and my own view -- this
19 resistance to PRA is not the staff. It's not the NRC staff.
20 It is the licensees. They insist, oh, you couldn't possibly
21 do this stuff, and they just don't understand.
22 Like I say, part of the problem is they don't have
23 people that have ever done this, so they don't understand
24 how they could do it.
25 You know, if they had on their staff people who

1 had done it, they would understand, yes, you could do it.
2 DR. GARRICK: Yeah. So, it will come, and maybe
3 this is just as well, that it has to come in this fashion.
4 The marine industry is going through the same
5 thing. When they finally got pushed to the wall and they
6 did the Prince William Sound study, which was pretty close
7 to being a full-scope probabilistic risk assessment, and
8 they've learned a tremendous amount from that study, much
9 more than all the rest of the studies they've done, put
10 together, about risk.
11 So, you know, it seems to be a pattern that is
12 unavoidable, and we're going through it now in the chemical
13 field.
14 MR. DAMON: I agree. What I see when I see the
15 analyses, unless the system is extremely simple, what will
16 happen when they use these non-quantitative methods is they
17 will simply get the system model wrong. In other words,
18 they're not -- because they're not used to formulating what
19 I would call a quantitative reliability model, they don't
20 understand the equation, and if you don't write the equation
21 down, you don't know what you're relying on for safety in
22 the system.
23 So, they get everything wrong. They don't succeed
24 in identifying -- for one thing, when a redundant system --
25 they don't properly understand the virtue of limiting the

1 down time by surveillance method or having fail-safe
2 equipment or self-announcing failure.
3 You know, the idea that when -- if you have two -
4 - a redundant system and you get the first failure, you've
5 got to be aware that that system is in a vulnerable state so
6 that you can render it safe.
7 You've got to limit the down-time of that initial
8 failure.
9 They don't understand that, so they don't do
10 anything about it in some cases, and in some cases they do,
11 they've figured it out by just sort of experience, that, you
12 know, you need to have something to recognize when the
13 machine breaks, but they don't understand the concept, they
14 don't understand the math behind it.
15 DR. GARRICK: How are we doing? According to the
16 agenda, we're due for a break in about 10 minutes. Are we
17 within 10 minutes?
18 MR. DAMON: Yes.
19 DR. GARRICK: Okay. Good.
20 MR. DAMON: The trouble with qualitative --
21 DR. GARRICK: We say this like it's your fault.
22 DR. APOSTOLAKIS: Well, he has been so slow.
23 DR. GARRICK: And we apologize for our
24 interruptions, but we're learning a lot.
25 MR. DAMON: The idea here is how is the staff

1 going to judge when the applicants send in their version of
2 a likelihood evaluation whether this thing all makes sense?
3 My own view is, if you have any doubts, you're
4 going to do your own quantitative analysis of whatever the
5 situation is, but one way of looking at things is to
6 categorize things by the various qualities that you rely on
7 to achieve a high reliability, high availability type of
8 system, and this is a list of the different factors that
9 need to be evaluated, and if the applicant hasn't considered
10 these things, they don't know how to put the whole thing
11 together, then they're going to get the wrong -- an
12 inadequate answer.
13 For example, the thing I was mentioning about
14 limiting down-time is what I'm calling here an availability
15 measure.
16 That's certainly something they need to address.
17 They need to tell you in the analysis what surveillance
18 they're doing on the equipment to detect that it's in a
19 failed state -- functional test, monitoring, operator
20 observation, or what, and of course, independence is related
21 to, you know, things like common cause and diversity, and
22 there's guidance in the Standard Review Plan telling the
23 reviewer to look and see, have they looked support system
24 failures, you know, power supply to the system and stuff
25 like that.

1 If they haven't done that, then they probably
2 haven't got a system that is going to meet the standard for
3 highly unlikely.
4 The reason the number 10 to the minus 5 and that
5 quantitative stuff was put in there is we asked somebody --
6 we asked one of the applicants, one of the licensees, what
7 would they consider to be a highly unlikely for a single
8 accident to occur, and they said, well, less than once in
9 the life of a plant, and at that point, I realized they
10 didn't understand the concept that we're talking about each
11 accident here, that there's thousands of accidents, and that
12 if it was once in the life of a plant times 1,000, they
13 would be having them every month, you know, and they don't
14 understand things in that way.
15 So, that's why that kind of guidance is in there,
16 if they come in with a definition like that, but what we
17 expect is these qualitative things.
18 These graded management measures are all the
19 things like QA, maintenance, configuration management. We
20 expect them to specify what they're going to do to these
21 items relied on for safety that's going to make them
22 reliable and available and to commit to them in writing and
23 submit that list of items relied on for safety that
24 specifies all these qualities that they're going to
25 maintain, and admittedly, this doesn't look very elegant

1 compared to doing a risk assessment, but compared to where
2 they were, you know, in 1991, this is a big step forward to
3 just get them to list all the items relied on for safety and
4 send it to us.
5 This is the thing that they're accustomed to, and
6 one of the reasons that they practice this concept of
7 qualitative evaluation is it goes back to the fact that the
8 only kind of safety analysis they did was criticality safety
9 analysis, and in that field, the people that write the
10 standards on that, many years ago, came up with the idea of
11 a thing they call double-contingency, and there's the
12 double-contingency statement. It's just redundancy.
13 They're just saying don't rely on any single
14 control, and they learned this the hard way. Back in the
15 '50s and '60s they had a criticality accident about every
16 two years until finally somebody says, you know, maybe we
17 should upgrade the safety of these things, and they came up
18 with this.
19 DR. APOSTOLAKIS: Single failure criteria, right?
20 MR. DAMON: Single failure criterion.
21 So, this is what they have been working to for the
22 last 30 years, and they haven't had a criticality in a NRC-
23 regulated facility in the entire history of the agency and
24 they haven't had a criticality in DOE since the mid-'70s, I
25 believe.

1 That was a shielded criticality.

2 No one has died in a criticality since the '60s.

3 So, there was a sudden improvement when they

4 adopted this concept.

5 So, what we're trying to do is get them to take

6 one more step here, do a little --

7 DR. APOSTOLAKIS: Do you think it would be a good

8 idea to ask everyone to try to identify plant

9 vulnerabilities?

10 MR. DENNIS: That is part of what is specified.

11 In fact, it's in the rule. They are required --

12 DR. APOSTOLAKIS: They will have to do it.

13 MR. DENNIS: They are required to identify

14 vulnerabilities and to correct them.

15 DR. APOSTOLAKIS: How much time do they have to do

16 that?

17 MR. SHERR: Four years.

18 DR. APOSTOLAKIS: Four years. And they will

19 submit the ISA to you for review?

20 MR. SHERR: ISA summary, right.

21 DR. APOSTOLAKIS: Summary. It's IPE all over

22 again, guys, It's really all over again. It's IPE.

23 Somebody must love it very much.

24 MR. DENNIS: Because of the number of processes

25 involved, these analyses actually are quite voluminous. It

1 takes about two bookshelves to three bookshelves full of
2 stuff or more to cover one of these plants. It's quite
3 bulky. So the ISA summary, we might get down to half a
4 bookshelf.
5 DR. GARRICK: While you were out, I was pointing
6 out the IPE started out as a simple solution that was
7 increased in scope with such things as external events and
8 later with large early releases, et cetera, et cetera, and
9 until you clearly see that, yes, you could have done a very
10 competent PRA, full-scope PRA for what's been spent.
11 DR. APOSTOLAKIS: We understand all this.
12 DR. GARRICK: It's a little unfair for a George
13 Apostolakis and John Garrick to be ganging up on you on this
14 discipline. We clearly have our prejudices with respect to
15 the use of PRA.
16 Is that it?
17 MR. DENNIS: That's it.
18 DR. GARRICK: That's very good. Well, we are
19 interested in this and see how it evolves, because it does
20 have a very familiar ring to it in the IPE world. So I'm
21 sure there's lots of lessons to be learned there. But I
22 would sure be a lot happier if the rule was not so sensitive
23 against the use of PRA as a preferred option for complying
24 with independent or integrated safety analysis.
25 Very good. Any other --

1 DR. APOSTOLAKIS: You say that you do have one of
2 the ISAs, the BXT?
3 MR. DENNIS: BWXT used to be B&W, Babcock &
4 Wilcox, only they changed their name and they put an X in
5 it, for some reason.
6 DR. APOSTOLAKIS: It's like LAX. Do you think we
7 can have a subcommittee meeting, a joint subcommittee
8 meeting reasonably soon, where we can discuss the ISA and
9 the details? Because what you gave us today is really a
10 presentation that one would make before -- they will be
11 invited, too.
12 DR. GARRICK: But I think if we heard a
13 presentation of an ISA of a specific facility, then we'd
14 develop a much greater sense of what it's all about and also
15 may be able to make some constructive ties with what is
16 required to upgrade it to a PRA.
17 STAFF: If this is a question directed at the
18 staff, the answer is yes.
19 DR. GARRICK: Yes.
20 DR. APOSTOLAKIS: Would the industry be willing to
21 come?
22 STAFF: That I don't know. We would certainly
23 work with them to see if we could get them to participate.
24 DR. APOSTOLAKIS: If you asked them today, they
25 will come.

1 DR. GARRICK: Thank you very much. We're going to
2 take a 15-minute break.
3 [Recess.]
4 DR. GARRICK: We'll come to order. We are now
5 going to hear about why they sent us this big book on
6 byproduct material risk analysis, and three volumes, and I
7 think you ought to tell us about it.
8 Would you introduce yourself and tell us what you
9 do, et cetera, first?
10 MS. ULRICH: Sure. My name is Betsy Ulrich. I'm
11 a Senior Health Physicist in Region I. I do both licensing
12 and inspection of materials activities. A few years ago, I
13 was asked to take part on the -- let's see, what was it
14 called at the time -- nuclear materials byproduct risk
15 review group, which we shortened to RRG and you may see that
16 in the handout occasionally.
17 That's what I'm here to talk about today, the risk
18 assessment that was done of byproduct material activities.
19 There's three things that I would like everyone to
20 remember about this study. This particular slide is not in
21 your handout, but everything that's on this slide is.
22 The first is that in this NUREG and in our report,
23 you will see numbers, and the use of numbers implies or may
24 imply that there is great accuracy.
25 In fact, the numbers that resulted in the risk

1 assessment for radiological risk have uncertainties that are
2 on the order -- orders of magnitude. So because we have
3 numbers doesn't mean great, great certainty in this case.
4 DR. APOSTOLAKIS: Let me understand that.
5 MS. ULLRICH: Yes, sir.
6 DR. APOSTOLAKIS: The way I read the book is that
7 there is variability on several orders of magnitude if I
8 look at the numbers for one activity from facility to
9 facility or maybe across activities. But if I specify one
10 activity, is the uncertainty orders of magnitude?
11 MS. ULLRICH: Yes, it is.
12 DR. APOSTOLAKIS: And why is that?
13 MS. ULLRICH: Because even among the systems, as
14 we define them, there is great variability, and I will talk
15 about that in the presentation. So if you want to hold
16 that, I think we'll get to it.
17 The second point that I want to make is one that
18 has confused many of the people that I've presented some of
19 this information to in the materials community, and that is
20 our risk values have units of millirem per year. It's
21 because when we defined risk, we said this is the
22 consequence in terms of dose, millirem per year, multiplied
23 by a probability of some event happening.
24 The resulting units are millirem per year. People
25 look at the tables, don't read the word risk, they see the

1 millirem per year, and they said you don't get doses like
2 these in materials activities. And so it's something that I
3 have to stress to a number of people.
4 DR. APOSTOLAKIS: So it's the expected dose.
5 MS. ULLRICH: Yes. And the third is that we did
6 not make any judgment in the study as to what is acceptable
7 risk. That is something that probably needs to be done, but
8 it was not done here. We simply assessed what we believed
9 the risk values to be.
10 These are the topics that I will move through,
11 some more quickly than others, and certainly spend whatever
12 time you want in the different areas. Who we are, what the
13 scope of the risk assessment included, what categories of
14 radiological risk we assessed quantitatively, how we did the
15 risk assessment or how the contractor did the risk
16 assessment, since they did the real guts of that work, and
17 where our uncertainties are, how we used the consequence
18 information, and what evaluations the risk review group did
19 of the NUREG CR information, and what we conclude the
20 results are.
21 The risk review group had two goals, to identify
22 and document a technical basis for a risk-informed approach
23 for regulating byproduct materials. That included all Part
24 30 activities. So those are activities covered by the
25 regulations in 30, 31, 32, 33, 34, 35, 36, and 39. And to

1 develop a graded approach for regulating them using this
2 risk information.
3 We had five persons on the group; two health
4 physicists, one from the NRC, that was myself, one from the
5 State of Colorado. We also had persons with experience in
6 risk assessment, engineering and human factors. So that was
7 the core group, and our job was to figure out how to cope
8 with this project, to find a contract to assist us with it,
9 oversee what they did, work with them, and try to make some
10 conclusions out of this as to how we can use this
11 information for materials.
12 DR. APOSTOLAKIS: Now, the risk assessment person
13 was from the reactor arena?
14 MS. ULLRICH: John Randall, actually. So yes.
15 As I said before, Parts 30 through 36 and 39, again, I have
16 given this presentation to some other people, so I find
17 myself riding my little hobby horse about you multiply dose
18 times the probability and you get units of dose, but it's a
19 risk value in this study.
20 We defined what we considered discreet systems for
21 materials activities based on similar uses, quantities and
22 forms. This is the obligatory slide that's difficult to
23 read. This pretty much covers the range of materials
24 activities. We did have pointed out to us in the comment
25 period that we missed a couple of items, like nuclear

1 laundries, decontamination services, but I think overall,
2 we've got a good scope there.
3 Why some of the uncertainties are still high, even
4 with a system like fixed gauges, there's a wide range of
5 gauges, there's a wide range of activities used in the
6 gauges, how they're used, where they're used. So there's
7 uncertainty when you come up with one number for that
8 category.
9 One correction to this, and that is system four.
10 It should be nuclear medicine, generator only, and this is
11 because there are some hospitals that use generators,
12 molytech generators, and more and more now do not. So if
13 you wanted to assess the risk for a group that uses a
14 generator, you would add systems four and five.
15 So the four is generator only and then five is all
16 the nuclear medicine involved with administering those
17 dosages to patients.
18 Scope of the risk assessment. For the
19 radiological risk, we looked at what is the risk to workers,
20 what is the risk to the public, what is the risk under
21 normal conditions and off-normal conditions. There's
22 actually another set of categories, which is risk to
23 individuals and an industry-wide risk.
24 It did not include doses to patients. That's real
25 important for people in the medical community to understand.

1 It's also important for the people in NRC to understand,
2 because a lot of our regulations involve misadministration
3 to patients. That was considered out of bounds, out of the
4 scope of this project. So that's not included.
5 We didn't look at transportation, covered under
6 Part 71 or DOT, and we didn't look at developing future
7 technologies.
8 The real nice thing, and this will come up again
9 later, is that along with the NUREG CR, the contractor
10 developed the database that could be used for revising
11 systems or adding new systems, as we have more information
12 about new technologies.
13 DR. GARRICK: Having done this study now, I
14 suspect you'd be able to reduce these 40 systems down to a
15 much smaller number.
16 MS. ULLRICH: I don't think so.
17 DR. GARRICK: You don't think so?
18 MS. ULLRICH: It was real difficult even coping
19 with the variations within these systems. It was an
20 extraordinary amount --
21 DR. GARRICK: Well, if you were to do it by risk,
22 if you were to categorize it by risk, would you be able to
23 sort a smaller grouping?
24 MS. ULLRICH: I certainly think that you could
25 sort out systems that you wanted to look at in more detail

1 and more rigorously. I think you could select out the
2 systems with higher risks that you might want to find more
3 information about and make it a more certain assessment.
4 DR. GARRICK: Well, if you wanted to dig deeper
5 into those that were most important.
6 MS. ULLRICH: Yes.
7 DR. GARRICK: John, you seemed to have a reaction
8 to the question.
9 MR. RANDALL: Yes. I was just thinking. I didn't
10 stay with the group long enough to get to that point, to get
11 a chance to think about sorting the risk numbers.
12 The group functioned for a while as a group and
13 then suddenly we weren't a group anymore. It was just
14 interesting.
15 MS. ULLRICH: There was some attrition, yes.
16 DR. GARRICK: I found the document to be very
17 useful, and the partial answer to the question that this
18 joint subcommittee asked early on is that you should tell us
19 what you think is important from a risk perspective, and
20 let's start from that point.
21 You've kind of done that now for the byproduct
22 side of the problem.
23 MS. ULLRICH: I think so. These two bullets are
24 really probably the meat of what we had assistance from the
25 contractor to do, getting a quantitative and qualitative

1 assessment of the radiological risk. We also attempted to
2 get a qualitative evaluation of some of the other risks and
3 all of that information is summarized on the matrix handout
4 that some of you may have picked up.
5 So you will see the bottom list of some of the
6 other issues we looked at, regulatory burden, risk of
7 contamination, the cost of decontaminating, non-rad health
8 risk. Those we simply didn't have the time or other
9 resources to pursue that in any kind of quantitative way.
10 So those were qualitative and based on mainly literature
11 research, if I recall correctly.
12 The matrix summarizes all of the numbers and in
13 all of the risk categories. These are the eight risk,
14 radiological risk categories that we looked at. The first
15 four are all the individual risk categories. The second
16 four are industry-wide risk.
17 It's not truly a collective dose. It's looking at
18 the population of the industry only, not the persons that
19 would be affected by that industry, and I'm not really sure
20 what to do with those numbers or how best to use that
21 information. It's simply clear that if you look at
22 industries that are large, such as portable gauges, having
23 many thousands of them out in use, they rise higher level of
24 risk, if you're comparing industry-wide risk, than they do
25 in individual risk.

1 Industries that are very small, the use of pool
2 irradiators, mega curie pool irradiators, you can probably
3 count on a couple of hands and maybe a foot how many we have
4 of those in the United States, very small industry. So as
5 an industry risk, they don't come near the top.
6 So I'm not really sure how we should use that
7 information, but we do have it at this point. The other
8 thing is there's probably larger uncertainties with the
9 industry risk, because now we're guessing how big the
10 industries are, and that's also a difficult thing to do.
11 The method that we ended up choosing for the
12 radiological risk assessment was probably best described as
13 a modified target, hazard -- hazard barrier target analysis,
14 where the hazard is the radioactive source. There are some
15 barriers that may be administrative, may be physical, which
16 protect the source from reaching a target, who is either a
17 worker or a member of the public.
18 The other thing to remember with this study is
19 that a member of the public could be a collocated worker,
20 somebody who is not assigned to work with radioactive
21 material, but may be at the next laboratory bench or may be
22 the flag person on the construction site near where somebody
23 is using a portable gauge.
24 So that would constitute, in this study, a member
25 of the public, not a worker.

1 DR. GARRICK: That almost lines up with level one,
2 two and three. In the old reactor days, we used to talk
3 about the plant model, the containment model and the site
4 model.
5 MS. ULLRICH: Okay.
6 DR. GARRICK: It's the same kind of breakdown.
7 MS. ULLRICH: Yes. Well, what did we have to do?
8 Well, we had to adequately describe the systems,
9 characterize the systems in a way that made some sense, that
10 it would include the main range of radionuclides, the range
11 of activities that were used in each system, and then look
12 at what are the barriers, what kind of shielding is there,
13 what kind of confinement is there, what kind of restrictions
14 to access are there, what's required by regulation, what's a
15 good practice.
16 That took a while to develop, again, because the
17 industries, even within the systems, vary and people use
18 radioisotopes for different things or in slightly different
19 ways. So it's not terribly consistent from user to user and
20 it's less consistent as you go from sealed to unsealed.
21 The unsealed users are all over the board with how
22 they handle stuff.
23 Developed scenarios or sequences of what kinds of things
24 happen when people handle radionuclides and what can happen.
25 Can they pick it up? Can they drop it? If they drop it,

1 does it break? If they drop it, does it spill? All those
2 sorts of things went into the sequence development.
3 Then those sequences, in an effort to simplify it
4 or characterize as event trees, but only in terms of success
5 or failure of shielding or confinement or access. The
6 contractor did not attempt to do that for all the individual
7 events that would comprise shielding or comprise
8 confinement.
9 DR. GARRICK: Betsy, in connection with the
10 development of the scenarios, one of the things I was trying
11 to figure out as I read the document is whether the
12 database, such as the NMED or whatever it is, drove the
13 structuring of the scenarios or whether the physical system
14 and an engineering analysis thereof drove the development of
15 the scenarios.
16 MS. ULLRICH: Where there is a system that would
17 be considered engineered, like a pool irradiator or
18 radiography unit, that certainly drove it. I think work
19 habits drove it, the process people go through in using,
20 looking at it from how do they get the material, how do they
21 receive it, when they handle it, what are they using it for,
22 how do they store it.
23 NMED did not drive that at all.
24 DR. GARRICK: Okay.
25 MS. ULLRICH: Okay. NMED was actually a very

1 limited resource for us, in many ways.

2 DR. GARRICK: I know that and that's why if you

3 were going to tell me that it was an NMED, then you were in

4 for some real questioning.

5 MS. ULLRICH: Okay. Now we start getting into

6 some of the interesting stuff. Determining the frequency of

7 sequences, that is where NMED did come in. Where we had

8 incidents that were required to either be reported and we

9 had NMED information, some of that was used to develop

10 probabilities for the frequency of those events happening.

11 One of the errors in here is that we don't have a

12 good handle on denominators. NMED would give you the number

13 of numerators, the number of reported events that happened,

14 but we don't always have good denominators for these

15 numbers, either.

16 Nuclear materials events database.

17 DR. APOSTOLAKIS: NRC?

18 MS. ULLRICH: Yes.

19 DR. APOSTOLAKIS: The equivalent of LERs?

20 MS. ULLRICH: Yes.

21 DR. GARRICK: Yes, sort of, but a little

22 different. It's a little more compact than the LERs.

23 MS. ULLRICH: It also gathers information from the

24 agreement states, as well, for the materials activities.

25 Once a frequency was determined, we could also calculate the

1 doses and then calculate the risk value by multiplying
2 those.
3 All that information is on computer disk. It's
4 the byproduct material system risk database. It's got a
5 file and a user's guide and that is available to NMSS. They
6 have a couple copies of that, and that contains all the
7 information that is the basis for the dose calculations and
8 the risk calculations.
9 It wasn't a trivial effort. I don't know how
10 these numbers compare to a PRA or to a reactor risk
11 assessment, but to me these numbers were mind-boggling.
12 Fifty-six different nuclides, 518 tasks, 4,000 normal and
13 off-normal sequences and over 27,000 individual
14 calculations, and none of that is in the NUREG.
15 DR. GARRICK: That's a small fraction of one PRA.
16 MS. ULLRICH: Yes. To me, that's a big deal. It
17 was a lot of effort, and I wasn't the one who had to do it.
18 So kudos to the people who did it.
19 DR. APOSTOLAKIS: Now, you're going to talk about
20 the uncertainties at some point.
21 MS. ULLRICH: Yes.
22 DR. APOSTOLAKIS: In the assessment process, when
23 you calculate the consequences, you say somewhere here that
24 you were uncertain about the -- I made a note on it. The
25 risk results are based on an average consequence for the

1 conditions evaluated. There can be significant variability
2 of risk results around the average due to the variations
3 from one user to another, and from one day to another.
4 Would you care to explain?
5 MS. ULLRICH: Sure. Let's take a hospital
6 situation, since many people are familiar with that, and a
7 hospital situation is actually more consistent than many of
8 our other material systems that handle unsealed material.
9 But on any given day, they may have six patients,
10 they may have 16 patients. If they have 16 patients,
11 they're going to be handling more activity than they would
12 on a six-patient day. They may have iodine therapy just one
13 day a week or one day a month. Iodine therapies drove the
14 dose consequences in these risk analogies.
15 So if you have a hospital that doesn't use iodines
16 at all, their risk is going to be much lower than the
17 hospitals that are frequent iodine users.
18 DR. APOSTOLAKIS: So there is an uncertainty,
19 then.
20 MS. ULLRICH: Yes.
21 DR. APOSTOLAKIS: Regarding the number of
22 activities.
23 MS. ULLRICH: Yes.
24 DR. APOSTOLAKIS: Taking place within a period of
25 time.

1 MS. ULLRICH: Yes.

2 DR. APOSTOLAKIS: And the reason why we're
3 interested in that is because if you have N activities, then
4 there is maybe a high probability of human error or
5 something like that, because people have to do many more
6 things.

7 MS. ULLRICH: Yes.

8 DR. APOSTOLAKIS: This is not the typical
9 uncertainty that you find in PRAs.

10 MS. ULLRICH: No.

11 DR. APOSTOLAKIS: This is different. This is, in
12 the parlance of some of us, aliatory. The uncertainty
13 regarding the frequency of the initiator, for example,
14 that's different. That's epistemic.

15 So I'm really wondering how you've coupled those
16 things in your event trees. Do we have the event trees and
17 I didn't look at them?

18 MS. ULLRICH: No.

19 DR. APOSTOLAKIS: Is it possible to get an example
20 of a calculation that will walk me through this kind of
21 thing? Because I'm really curious to see how you combine
22 the two. It's something that is not done normally.

23 MS. ULLRICH: I've got two victims in the back
24 that I can pick on for a response to that.

25 DR. APOSTOLAKIS: Yes. Who are they? Mr.

1 Youngblood.

2 MS. ULLRICH: Yes.

3 MR. YOUNGBLOOD: The right choice is actually Mr.
4 Schmidt.

5 DR. GARRICK: You have to say who you are.

6 MR. SCHMIDT: Bob Schmidt, with Scientech. I was
7 pretty much the lead on the risk analysis. We did not do
8 any uncertainty analysis. Everything was calculated
9 basically as a point estimate of numbers to get the
10 frequency and to get the consequences. There was no
11 uncertainty analysis. All of the statements about
12 uncertainty are judgments as to what the variability might
13 be, what the uncertainty, but there's all kinds of
14 variation, trying to avoid getting into trouble with the
15 right terms.

16 When you analyze the system, the source strengths
17 can be very large within a system. One user can use it one
18 way, one frequency. Another one can stand further. You
19 have to determine how far away from it he stands, how often
20 does he drop it, does it open up, what are the airborne
21 release fractions.

22 There are so many parameters, that we did not do
23 an uncertainty analysis. It was just a point estimate, a
24 best estimate that we could make based on the available
25 information.

1 Some of the data, if you look at the normal risk,
2 that's pretty good, because we have data on normal risk.
3 The radiographers get a risk or an exposure per year which
4 is recorded and which is reported to NRC.
5 On the other hand, some people don't, it's not
6 reported. Accident risks are obviously -- where we knew
7 there was an accident, we would -- and we got a consequence
8 for that accident, we'd kind of go look at what was reported
9 in NMED; are they reasonable or not, yes, but we didn't do
10 any uncertainty analysis.
11 DR. APOSTOLAKIS: Now, when you say you didn't do an
12 uncertainty analysis, I guess you mean you didn't do an
13 uncertainty analysis in the PRA tradition, where, again, you
14 consider the uncertainty in the frequencies of the
15 initiators, the unavailabilities of systems, and so on, the
16 epistemic part.
17 But since here you have aliatory and it makes a
18 difference in the model, I wonder how you would do it. I
19 mean, you could still do it in a point estimate basis, but
20 you still have to consider cases like do they have one
21 patient or six. Is that in the event trees, the number of
22 patients and the consequences?
23 MR. SCHMIDT: There was an assumption about we
24 gather data and try to determine the frequency of use in a -
25 - generally, it was kind of a maximum facility. It was a

1 facility that used -- did this activity, from talking, in a
2 limited sense, to a few licensees and we had restrictions
3 there, how many times would they do it in kind of a maximum
4 case in a day, how many times a year, what was the source
5 strength, and that's the way it was combined.
6 DR. APOSTOLAKIS: Increase in probability of human
7 error because of the simultaneous or concurrent activities
8 was not included.
9 MR. SCHMIDT: No. We didn't get into that. If we
10 had data on how many drops, the issue about there's no
11 denominator and getting a probability of a spill, that would
12 kind of enter in and be taken out, because how many spills
13 did you have in a year, we knew, but how many activities in
14 a year, we didn't know, but we put it into the numerator and
15 in the denominator.
16 The numbers for the industry, though, are better,
17 because we had all the -- if the reporting is accurate, how
18 many occurrences occurred through the whole industry, how
19 many people are out there using them, that's an uncertainty.
20 DR. GARRICK: But it does sound like, A, you
21 considered the use of the facility, the frequency, the
22 frequency of the use, and, B, you considered the nature of
23 incidents per use.
24 MR. SCHMIDT: Yes.
25 DR. GARRICK: And that frequency was probably

1 influenced by the use frequency, was it not? That is to
2 say, if it was extensively used, you might make an
3 adjustment for there being more incidents per use than if
4 it's used infrequently. Did you make any of those kind of
5 adjustments?
6 MR. SCHMIDT: I can't recall any case where we
7 made a judgment that a facility that did a lot of this work
8 had a greater or a lower frequency of occurrences than one
9 who did just a few. We did not get that sophisticated. We
10 had enough trouble getting one number, much less a --
11 DR. GARRICK: But that would be one place where
12 you would come close to an initiating event analog, is if
13 you considered those kinds of things.
14 DR. APOSTOLAKIS: It still would be very
15 illuminating to see a detailed analysis for two or three
16 cases, different cases, if we can get that.
17 MS. ULLRICH: We have the system 24 walk-through,
18 which is probably about as close as that would get, Bob.
19 DR. GARRICK: Okay. Go ahead.
20 MS. ULLRICH: Okay.
21 DR. GARRICK: I found this study very interesting,
22 by the way. It was very informative and illuminated one of
23 the issues that is very important in the materials field,
24 and that is the contribution to risk of operations versus
25 accidents, and sort of rather dramatically indicates the

1 great differences here between this problem and, say a
2 reactor problem and the presentations of that, even though
3 it was very qualitative and non-uncertainty, was very
4 helpful in a risk communications sense.
5 MS. ULLRICH: Okay. That's good. Since we've
6 talked so much about uncertainties, I don't think we need to
7 spend too much time on this, but I would say there's
8 uncertainties, or perhaps variabilities or variations is the
9 better term here, in what we know about the systems.
10 DR. APOSTOLAKIS: This is a very important point,
11 because there are two kinds here that appear to be very
12 important. One is this randomness in the number of uses or
13 other things and then this other one is of the state of
14 knowledge type, where you really don't know the numbers.
15 In a PRA, when we say uncertainty analysis, we
16 mean the second.
17 MS. ULLRICH: Yes.
18 DR. APOSTOLAKIS: Because everything else is
19 frequencies, exponential distributions, straightforward. So
20 I would really be curious to see how you guys handle this or
21 in the future perhaps how you will handle it.
22 MS. ULLRICH: Variabilities in the information we
23 had about the systems, variabilities in the dose
24 calculation. Probably external dose calculation is of
25 better certainty than internal dose, but is still the choice

1 of how far away is the person, how long do they spend there,
2 that sort of information.
3 We use the alloys from Part 20, which is ICRP-30
4 based. We've had people argue with me about that shouldn't
5 be the best way to do it. As far as internal dose goes, one
6 of the conversations I had with Charlie Minehold was how
7 good are internal dose models, and he said, well, for
8 tritium, you're probably good for a factor of two or three;
9 for everything else, it's up in the air.
10 So there are uncertainties in the dose modeling.
11 Just because we can crank numbers in a computer doesn't make
12 them particularly good numbers all the time.
13 The third category is uncertainties in the
14 frequency or probability, likelihood, whatever you want to
15 call that term, and that's what you were talking about
16 before; how often do things happen, how well do we know
17 that. So those were the --
18 DR. GARRICK: You talk a lot about uncertainty,
19 but you don't do anything about it.
20 MS. ULLRICH: It was really -- I'm certain that I
21 didn't know enough about it. There was nothing we could do
22 rigorously for this.
23 DR. GARRICK: I understand.
24 MS. ULLRICH: There's too many unknowns and given
25 the time we had.

1 DR. APOSTOLAKIS: We should move on.

2 MS. ULLRICH: Well, then I'll do that. One of the
3 things that I do want to emphasize is that we have the dose
4 calculations first, the consequence, and that information,
5 looking at where do you get the big doses, was what -- was
6 the information that was used to say what things do we have
7 to regulate and make sure are in place, what barriers have
8 to be there with very high assurance, with high assurance or
9 with moderate assurance.

10 So when the NUREG document talks about where our
11 regulatory options should be, what areas should we regulate,
12 it's based on what things gave you big dose. And that, I
13 think, is important for people to understand if they're
14 going to use this document.

15 The risk numbers alone don't tell you everything.
16 Where the doses are tells you what barriers need to be in
17 place.

18 Not a big surprise for the sealed sources, one of
19 the barriers that has to be there with very high assurance
20 is the integrity of the source encapsulation. That's
21 something that's a function of the manufacturer, not the
22 person who uses the source. It's got to be manufactured
23 right to begin with and then they can begin to abuse it and
24 run them over with steamrollers and the other interesting
25 things that happen with some of our sources.

1 For most of the unsealed materials, the major
2 barriers were prevention of loss or abandonment, and that's
3 a big one for the sealed sources, as well, as anybody who
4 has been in any of the steel industry meetings will hear
5 about, and preventing accidents to the material, and both of
6 those involve a lot of administrative barriers, as well as
7 physical barriers.
8 The risk review group did also do a survey of
9 inspector and licensing personnel. We had hoped originally
10 to get some information that would help us with the -- the
11 contractor with the risk assessments. It didn't get done
12 quite in time. They ended up not being able to use any of
13 that information, but then I used it as a sort of test, is
14 the opinions of inspectors and license reviewers about the
15 safety of these different systems and how frequently they
16 have accidents and what kind of doses they get, in line with
17 what the NUREG calculations showed.
18 On the whole, it was pretty good. There were some
19 glaring differences, but. These were the kinds of
20 evaluations that were done with the material and all of this
21 is reflected in some of the tables you have, selected tables
22 at the end of the handout.
23 Let me deal with that first issue, and that is
24 looking at the issue of do you look at two significant
25 figures, do you look at one significant figure, or if the

1 uncertainties are really on orders of magnitudes, do you
2 look at these numbers in powers of ten.
3 I ended up choosing to use the one significant
4 figure column, because it was the most comfortable one to
5 use for me. The powers of ten made the range of categories
6 so broad that I really didn't feel like I got a handle on
7 it. So in all my other evaluations, I used the column of
8 one significant figure.
9 This is the risk to individual workers under
10 normal conditions. This is the one which you see the
11 highest risk.
12 The nice thing here is that you can compare this
13 to real doses that people get in a typical year, because you
14 would pretty much expect them to use material properly all
15 the time and get those kinds of doses.
16 We don't typically see doses of 3,900 or 2,000 rem
17 in a year. Even for the radiographers, it's not terribly
18 normal to be that high anymore.
19 DR. GARRICK: Thirty millirem, right?
20 MS. ULLRICH: Yes. I'm sorry. What's a factor of
21 a thousand between friends, right? No. It's a millirem. I
22 also ranked the systems just to see how they came out and
23 that has its interesting aspects, as well.
24 Here, the numbers are simply the ranking from one
25 to 47, because as you see, we ended up breaking some of

1 these systems into smaller portions. You had asked earlier
2 if we could consolidate it down more and what we found is we
3 were breaking it into smaller pieces.
4 It jumps out right away that we got a lot of low
5 numbers here for radiography at field sites. That's overall
6 a risky activity, but for some of the other systems, you can
7 see it really jumps around, depending on what risk you're
8 looking at.
9 So I didn't see any point in coming down to a
10 single number of risks for a system because it hides where
11 you might want to make some regulatory changes.
12 DR. GARRICK: I think that's excellent. I think
13 that was a very wise decision.
14 MS. ULLRICH: Let's see. One of the other
15 evaluations we did was to look at how the risk of the
16 systems stacked up against the way we inspect them.
17 Materials is a little different from reactors in that we
18 have categories, priority of inspections. Priority one gets
19 inspected once a year, priority three every three years,
20 priority five every five years, and they're unannounced
21 inspections.
22 I'm not sure I really see a pattern in there. On
23 the other hand, it's also clear that we have looked at the
24 consequences in a lot of the systems in determining who
25 needs a lot of attention. Radiographers, pharmacies, these

1 people get looked at every year.

2 DR. APOSTOLAKIS: Would it make sense now to

3 inspect teletherapy every three years and nuclear pharmacy

4 once a year, when you have 50 millirem versus 800?

5 MS. ULLRICH: Well, that's something that needs to

6 be looked at. It plays into how good of a dose number.

7 This is only in order by risk to the individual workers.

8 It's not looking at any of the other risk categories here in

9 this comparison.

10 So there may be other things driving it and one of

11 the other things that I have to say is that the nuclear

12 medicine people are just up in arms about how high that

13 number is. It can't possibly be that high and we got to go

14 back and look at that again, and, in fact, that may be what

15 we need to do.

16 DR. APOSTOLAKIS: Just like the reactor people.

17 MS. ULLRICH: Yes. It's interesting to look at.

18 This is something that we need to check and it may be a

19 place to use some of this information.

20 The numbers in parentheses are for broad-scope

21 programs, which may have multiple of these activities.

22 Under a broad-scope program, they would get inspected every

23 year.

24

25 What are the overall results? I don't believe

1 that the risk value alone is sufficient to regulate. There
2 are some byproduct material systems, like the pool
3 irradiators, that can produce lethal doses of people get
4 past the barriers, and so you have to make sure that you've
5 got regulations in place for those kinds of things.
6 There may be other things that have to be
7 considered, as well. But I think the risk value does have
8 its place.
9 One of the good things, we did not identify, in
10 the consequences, in those doses, anything unexpected,
11 anything that we didn't have regulations in place to handle
12 already.
13 Lots of general trends, and I think you've already
14 talked about some of these, that the risk is to the worker,
15 the public risks are much lower, the accident risks are much
16 lower. So I don't think we need to go over that in a lot of
17 detail.
18 To address that issue of comparing the risk value
19 to the inspection priority, I probably graphed that three or
20 four different ways just for the worker risk and really
21 didn't see a particular pattern. But I'm not sure that it's
22 the fault of either system right now. The inspection
23 priorities are based on program types, rather than systems.
24 The systems are different from the program types
25 that we use in NMSS. It may indicate, where there's big

1 differences, that some additional study needs to be made to
2 see why what we think -- why we need to inspect frequently
3 is either not justified by the risk value or may need to be
4 changed.
5 And the most important thing, and this comes up
6 with the strontium-90-I applicator, which came into the
7 bottom of the risk list in every category, just about, the
8 risk assessment, as we said earlier, didn't include risk to
9 patients. The strontium-90 applicators really don't have
10 much harm to workers or people, but there have been some
11 whopping doses to patients when they were misused or, in one
12 case, there was a series of misadministrations because they
13 had the calibration incorrect and the decay curve incorrect
14 for the use of that device, and that's something for the
15 Part 35 people to think about, I guess.
16 Systems with low risk values we can probably look
17 at to consider for reduction in regulatory burden. I think
18 these other points are discussed already.
19 I think it's real important and I'm kind of glad
20 to hear some of the favorable comments on this report,
21 because the materials community is picking it apart, for the
22 ones who do see it.
23 It's a first attempt to do this. As far as we
24 could tell, we couldn't find anything of this scope before.
25 There is certainly some risk assessment done of some

1 individual material systems. I think there's a PRA for the
2 gamma knife that was done.
3 But this scope is a new thing. I think it's got a
4 good solid basis. It could be extended, if we want to
5 extend it. It could be used for new systems, if we need to
6 use it for new systems. It's a consistent way of comparing
7 the different activities.
8 So I was really pleased with the NUREG and the
9 risk database that we received.
10 Where do we go from here? I think some of the
11 information from the NUREG, the risk database, the risk
12 review report, the matrix summary can be used in developing
13 the safety goals for the NMSS activities. It may be some
14 resource information to help decide what pilot activities
15 would be selected, what systems, what kind of byproduct
16 material activities do we want to look at for more rigorous
17 risk assessments.
18 It can be reference information to risk-inform
19 changes we might need to make in regulations, current
20 guidance, new rule-making. I believe we've already got a
21 commitment for the licensing and inspection guidance
22 document, the NUREG-1556 series. Those start under revision
23 this year and those teams should be using this information
24 as a reference to make those revisions.
25 And I already talked about how I think that risk

1 database is a useful tool.

2 So that's what I have for you today. Are there

3 any other questions at this point?

4 DR. GARRICK: I'm sure there are. What do you see

5 as the next move?

6 MS. ULLRICH: Well, we're always working on

7 something and the NUREG-1556, I know those revisions are

8 starting, so I would certainly like to see this involved

9 with them, and I would personally hope that this information

10 is able to be used by the folks working on the SECY-99-100

11 activities.

12 DR. GARRICK: Have you been tracking at all the

13 changes that have been made on the reactor side in NRC

14 oversight and the way the maintenance rule and the IPE work

15 has influenced the overhaul of NRC oversight for reactor

16 inspection?

17 MS. ULLRICH: I would say that I've seen some of

18 the trickle-down effect from that.

19 DR. GARRICK: Well, I see a similar opportunity

20 here. You've touched on it, with trying to matrix the

21 results with the inspection frequency and duration, I guess.

22 But I would think this would be an important starting point

23 for really examining the efficiency and effectiveness of

24 inspection. Meanwhile, this analysis would also come under

25 some increased examination and criticism and that would be

1 constructive, as well.

2 So I hope that there is some consideration given

3 to that.

4 Hornberger? George? We can just encourage you to

5 keep up the good work. There is no question that in the

6 details, you can find problems with the analysis, but from a

7 top-down perspective, it's a giant step forward in

8 understanding what is going on in the byproduct arena. If

9 we could do something similarly for the other major

10 categories of the materials side, and there is movement in

11 that direction, then I think we would begin to see a risk

12 perspective of the entire materials side of the business.

13 The performance assessments are certainly doing

14 that as far as the repository issue is concerned. The dry

15 storage is doing some of that as far as fuel storage is

16 concerned. Then, of course, we heard about fuel fabrication

17 facilities and fuel cycle facilities.

18 So it does appear that there is movement and I

19 guess the only anxiety that some of us have is we would like

20 to see more commonality, if you wish, of the methods,

21 because there does seem to be --

22 DR. APOSTOLAKIS: And terminology.

23 DR. GARRICK: Yes, and terminology. There does

24 seem to be a determination on the part of each of these four

25 or five groups to at least have a certain amount of tools

1 that are unique to that particular section, and I'm not sure
2 that's necessary. But the progress that's been made is
3 still very encouraging.
4 Any questions from staff? Comments? Thanks,
5 Betsy. That was very helpful.
6 Well, what I think we ought to do now is spend a
7 little time asking what we ought to do with what we've heard
8 today. I suppose that to be orderly about it, we ought to
9 just go to the top of the agenda and work our way through.
10 DR. APOSTOLAKIS: I propose we don't write a
11 letter on the opening remarks.
12 DR. GARRICK: I'm glad to hear that. All right.
13 The first presentation from Virgilio was an overview, risk-
14 informing NMSS activities. That kind of had a lot of pieces
15 and parts that maybe we discuss individually.
16 But what are some of the thoughts of the committee
17 about what we heard this morning? The committee is only
18 three-fourths here.
19 DR. APOSTOLAKIS: I think a general message that
20 things are happening in various activities and that's good,
21 but there is a need for, as you just said, for coordination,
22 perhaps, common terminology, methods and so on. I think
23 that's a general conclusion that deserves to be documented
24 somewhere.
25 There's certainly a lot of work that's going on.

1 The only one -- if we decide to write a letter that gives an
2 overview of everything we heard, I would limit it to a short
3 letter.
4 Now, the special nuclear materials, I think,
5 deserves a separate meeting with all details on the ISA and
6 so on. Maybe we can just put that in this letter. And I
7 would propose that this become an ACNW letter with enhanced
8 membership, as we agreed earlier. That would take forever.
9 The special nuclear materials is of concern to me
10 because they are sending the rule up next week and clearly
11 we don't have time to have another meeting and everything.
12 So I was wondering whether there was a mechanism
13 alerting the Commission to the fact that maybe more detailed
14 comments would be forthcoming.
15 DR. GARRICK: One of the things we've already
16 observed, it was kind of interesting, that's come out of
17 these joint committee meetings, is that the energies of the
18 advisory committees have been, for the most part, consumed
19 in two areas, reactors and high level waste repositories.
20 And in the meantime, there's a lot of other
21 activities going on and it doesn't seem that they have had
22 the same kind of review and advice on the risk-informed
23 movement that these two extremes --
24 DR. APOSTOLAKIS: And I would put that also in the
25 general comments.

1 DR. GARRICK: Right, right. So that may make some
2 suggestions about the planning and the activities of the
3 committees.
4 Have you got anything to say about that, John?
5 MR. RANDALL: Yes. One of the things we discussed
6 at the last ACNW meeting was the division of work in certain
7 areas, like decommissioning.
8 DR. GARRICK: Right.
9 MR. RANDALL: And there are some other areas, like
10 Part 70, 71, 72, which were originally included in an MOU.
11 There is a draft MOU between the ACNW and the EDO, the ACRS
12 and the EDO, and it lays out areas of coverage for
13 particular committees.
14 But there is some overlap and there's some overlap
15 in Part 70 and we need to handle those, I think, on a case-
16 by-case basis.
17 DR. APOSTOLAKIS: That's a different issue. What
18 we're saying here is that there were some activities that
19 were not reviewed by --
20 MR. RANDALL: I know.
21 DR. GARRICK: Yes.
22 MR. RANDALL: There's some history to that, and I
23 don't want to go into all that right now.
24 DR. GARRICK: Yes. Maybe it was by design, but
25 anyway. We have some real --

1 DR. APOSTOLAKIS: We're looking for more work.
2 DR. GARRICK: -- catching up to do.
3 MR. RANDALL: There are some activities which are
4 picking up some areas in NMSS and fuel fabrication
5 facilities, there's talk about handling an application for a
6 Mox facility at the same time. NRR will be handling the
7 licensing and utilization of that material. So there will
8 be a division of responsibilities, which are already
9 outlined in this MOU, to look at some of these things. Of
10 course, they're unbudgeted, so that's a problem I have to
11 deal with.
12 Now, the sub-issue you raised if you feel -- if
13 you have concerns about the staff going forward with this
14 Part 70 rulemaking activity, I think it's something that we
15 need to let the staff know either through the EDO or through
16 the Commission. Usually, these things will go up to the EDO
17 and then at some point get to the Commission, and the
18 Commission may not act very quickly on this package.
19 But we certainly can let the Commission know that
20 the committee is interested in providing some comments. But
21 I think the staff would probably like to get a heads-up on
22 those types of comments in case they want to make any
23 changes in the document, they have an opportunity to do
24 that.
25 DR. APOSTOLAKIS: I think we should have another

1 meeting just on the special nuclear materials.

2 MR. RANDALL: Marty, do you have a schedule for

3 the Commission? Is it on a tracking system?

4 MR. VIRGILIO: Yes. The paper is going up to the

5 Commission, as Ted said, within the next week or so. It's

6 due up to the EDO, I believe, on Monday and then the EDO

7 gets a couple of days review and then it's due up to the

8 Commission.

9 The Commission meeting I think has been scheduled

10 for the week of June 20, somewhere right around there. It's

11 up to them how long it takes to decide on moving forward.

12 One thing that we might want to consider is can

13 you separate the concerns, the rule and the standard review

14 plan, and the two categories. One way to proceed, and I

15 think the rule is written at a fairly high level and you

16 might find that that's an acceptable approach, I believe it

17 is, listening to the concerns that were raised today, and

18 allow us to continue to work together on the standard review

19 plan through working through examples.

20 That's an approach that I think would be a good

21 approach. If it works for you, you would have to look at

22 the rule and make sure you see the rule the way I do, in

23 light of the issues that we've discussed today.

24 DR. GARRICK: That's a good point.

25 DR. APOSTOLAKIS: In any case, I don't think this

1 committee -- do we need the reporter?

2 MR. VIRGILIO: I don't think so, no.

3 DR. GARRICK: No.

4 [Whereupon, at 3:45 p.m., the meeting was

5 concluded.]

6

7

8

9

10

11

12

13

14

15

16

17

18

19

20

21

22

23

24

25

REPORTER'S CERTIFICATE

This is to certify that the attached proceedings before the United States Nuclear Regulatory Commission in the matter of:

NAME OF PROCEEDING: MEETING: ACRS/ACNW JOINT SUBCOMMITTEE

CASE NUMBER:

PLACE OF PROCEEDING: Rockville, MD

were held as herein appears, and that this is the original transcript thereof for the file of the United States Nuclear Regulatory Commission taken by me and thereafter reduced to typewriting by me or under the direction of the court reporting company, and that the transcript is a true and accurate record of the foregoing proceedings.

B. Charles Hopchas

B. Charles Hopchas
Official Reporter
Ann Riley & Associates, Ltd.

INTRODUCTORY STATEMENT BY THE CHAIRMAN OF THE JOINT SUBCOMMITTEE OF THE ADVISORY COMMITTEE ON REACTOR SAFEGUARDS AND THE ADVISORY COMMITTEE ON NUCLEAR WASTE
11545 ROCKVILLE PIKE, ROOM T-2B3
ROCKVILLE, MARYLAND
MAY 4, 2000

The meeting will now come to order. This is a meeting of the Joint Subcommittee of the Advisory Committee on Reactor Safeguards and the Advisory Committee on Nuclear Waste.

I am John Garrick, Co-Chairman of the Joint Subcommittee. On my left (right?) is Dr. Thomas Kress, also Co-Chairman of the Joint Subcommittee.

Joint Subcommittee members in attendance are Dr. George Apostolakis of the Advisory Committee on Reactor Safeguards, and Dr. George Hornberger of the Advisory Committee on Nuclear Waste.

The purpose of this meeting is for the Joint Subcommittee to discuss the development of risk-informed regulation in the Office of Nuclear Material Safety and Safeguards, including risk-informing fuel cycle programs, integrated safety assessments, byproduct material risk analysis, dry cask storage risk analysis, the results of a public workshop on the use of risk information in regulating the use of nuclear materials, and related matters.

The Subcommittee will gather information, analyze relevant issues and facts, and formulate proposed positions and actions as appropriate, for deliberation by the full Committees.

Richard Major is the designated Federal Official for the initial portion of this meeting.

The rules for participation in today's meeting have been announced as part of the notice of this meeting previously published in the Federal Register on ???

A transcript of the meeting is being kept. It is requested that the speakers first identify themselves and speak with sufficient clarity and volume so that they can be readily heard.

We have received no written comments from members of the public. We have received one request, from Robert Bernero, for time to make an oral statement.

(Chairman's Additional Comments - if any)

Our first speaker will be Martin Virgilio, Deputy Director of the Office of Nuclear Material Safety and Safeguards.

NRC Staff Briefing
On NMSS Risk-Informed Regulation Implementation Training and Workshop Activities

Presentation by John Flack

May 4, 2000

Flack Presentation

Overview

Status of SECY-99-100 Efforts:

- Risk Training
- Feedback from Public Workshop

Structure and Content of NMSS Risk Training

Three Tier Approach:

Tier I: Managers and Supervisors

Tier 2: Technical Staff (Pilot Program)

Tier 3 Risk Analysts and Specialists

Considerations

- To include both Headquarters and Regional Staff
- Best way to support Agreement States

Pilot Training Course

Pilot: Application of Risk to Nuclear Materials and Waste Arenas, (Tier 2 Training)

- Why use risk information is important.
- What risk tools are available
- How tools are applied and insights communicated

Outline of Pilot Training Program

1. Introduction

- Safety Goals verses Adequate Protection
- PRA Policy Statement
- Strategic Plan
- Risk-Informed Regulation Implementation Plan [SECY-00-0062]

2. Risk-Informed Regulations

- Principles of Risk-Informed Integrated Decision Making
- Risk-Informed Initiatives in Materials and Waste Arena
  - SECY-99-100
  - Implementation Process
- Ongoing Regulatory Applications:
  - Rulemaking
  - Licensing
  - Inspection and Assessment

Outline of Pilot Training Program (Continued)

3. Risk Concepts and Methodology

- Definition of Risk
- General Methodology
- Key Modeling Areas

  - Configuration and Success Criteria
  - Human Reliability Analysis
  - Common Cause Failure
  - Accident Progression and Consequence Analysis
  - External Events

- Statistical Analysis and Treatment of Data
- Treatment of Uncertainties
- Strengths and Limitations

Outline of Pilot Training Program (Continued)

4. Specific Application to Materials and Waste Arena

- Fuel Fabrication Facilities
- Transportation
- Nuclear Materials (ByProduct)
- Radiological Waste Disposal

Examples to include:

- Methodology and Application
- Key Assumptions
- Data Analysis
- Results and Findings
- Insights and use in decision-making

Outline of Pilot Training Program (Continued)

5. Application of Risk-Insights to Regulatory Decision Making Activities

- Insights from Sensitivity or Bounding Analysis
- Impact of Uncertainties
- Performance Measures

6. Risk Communication

- Internal Communication (Regulatory Decision Making)
- External Communication (Public Confidence)

Public Workshop

Public Workshop: On The Use of Risk Information in Regulating the Use of Nuclear Materials

Date: April 25-26, 2000

Workshop Objectives:

To Inform and Obtain Stakeholders Input:

(1) Criteria to Decide What Regulatory Activities to Risk-Inform

(2) Nuclear Material Safety Goals

Public Workshop Participants

Represented Organizations

- Nuclear Regulatory Commission (All NMSS Divisions, RES, NRR)
- Nuclear Energy Institute
- Health Physics Society
- Department of Energy
- Environmental Protection Agency
- Food, Drugs & Radiation Safety Division
- Occupational Safety and Health Administration
- ABB Automation
- Public Citizen
- Environmental Coalition on Nuclear Power
- Mallinckrodt Medical
- San Francisco General Hospital

SECY 99-100 implementation Process

1. Identify candidate regulatory applications that are amenable to expanded use of risk assessment information
2. Decide how to modify a regulation or regulated activity
3. Change current regulatory approach
4. Implement risk-informed approach
5. Develop or adopt existing tools and techniques

NOTE: First half of workshop primarily focused on Step 1

Proposed Screening Criteria

1. Should address one or more of the following:

   - maintaining or improving safety
   - improve the effectiveness or efficiency of NRC process
   - reduce unnecessary burden

2. Data and analytical methods exist or can be developed

3. Implementation can be realized at reasonable cost

General Comments and Input

- New requirements should be established using a risk-informed approach.
- A risk-informed approach should be pursued if it will lead to improvement in the effectiveness or efficiency of either NRC or Stakeholders process.
- Maintaining or improving safety should be the primary focus, all other issues secondary.
- Costs to the public and society need to be considered in deciding to risk-inform a program. The public should be considered in any burden reduction assessment.

General Comments (Continued)

- Areas suggested for examination include: broad scope licensees, unsealed sources, sealed sources and gauges, transportation.
- Implementation and associated training requirements needs consideration.
- The inspection process should fit hand and glove with implementation.

Role of Safety Goals in Materials/Waste Arena

"There is one thing stronger than all the armies in the world, and that is an idea whose time has come" - Victor Hugo

Second half of the Workshop focused on such an idea
Nuclear Materials/Waste Safety Goals

To establish nuclear material/waste safety goals that broadly define an acceptable level of risk to the public and worker.

Workshop Feedback

1. What were the perceptions of material/waste safety goal?

   - development of safety goals is worthwhile,
   - should be qualitative,
   - should help define the objective of the regulation,
   - would help communicate what it is we are trying to achieve,
   - application specific,
   - development will be a long and involved process,
   - the relationship between safety goals, strategic goals, performance goals and regulations needs to be well defined.

Feedback (Continued)

2. What would be an effective developmental process?

- understand goals underpinning our current regulations,
- use case studies to develop safety goals, capitalize on insights,
- develop RI approaches and safety goals in parallel,
- be sensitive to the desire for consistency with and among Agreement States,
- ensure regional and local involvement,
- hold workshops and public meetings in diverse regions,
- involve stakeholders early.

Feedback (Continued)

3. What factors need to be considered?

- national verses local values,
- ecological risk,
- operational and accident risk,
- worker and public risk,
- harmonization with other agencies,
- legislative requirements,
- risk to future generations associated with waste disposal,
- risk associated with theft, sabotage, diversion of nuclear materials,
- risk associated with chemical/toxic releases to the environment,
- "hidden" considerations may be embedded in the regulations.

Feedback (Continued)

4. What aspects of material safety goals would be analogous to reactor safety goals?

   - radiological risk to public (although criteria may be different).

5. Use overarching or separate safety goals for each activity?

   - general consensus is to develop separate goals and then combine,
   - use case studies to explore different areas.

Feedback (Continued)

6. How resource intensive?

   - too soon to tell precisely,
   - long term and involved,
   - do easiest tasks first (low hanging fruit),
   - NRC may need to sponsor training for Agreement States.

7. What would change?

   - appropriate safety improvements and relaxations where requirements do not contribute to safety,
   - enhance consistency regarding regulatory process,
   - potential cost savings (focus resources),
   - enhance communication.

Suggested Case Studies

Objective: To test screening criteria and understand the value added in risk-informing a focused area, and in development of specific safety goals.

1. Waste Disposal (HLW, LLW, Decommissioning)
2. Casks & Packages and Associated Transportation
3. Sealed and Unsealed Sources
4. Medical Uses of Isotopes
5. Large Process Facilities

Follow-on Activities

- Inform Stakeholders and Solicit Comments:

  - Workshop Summary
  - Distribute Transcripts

- Draft a Plan and Interact With:

  - NMSS Steering Group
  - Stakeholders

- Inform Commission and ACRS/ACNW of Plan and next steps

RISK-INFORMED APPROACHES TO NUCLEAR MATERIALS REGULATORY APPLICATIONS

May 4, 2000
ACRS/ACNW Joint Subcommittee

Virgilio
Presentation

SECY 99-100

- April 1997 Commission Direction: Develop a framework for applying PRA to nuclear materials uses similar to the reactor framework
- March 1999 SECY 99-100, "Framework for Risk-Informed Regulation in NMSS"
- Commission approved the staff's recommendations in SECY 99-100 in June 1999
- NMSS established a Task Force on Risk Assessment and Risk Management in July 1999

SECY 99-100 (continued)

- SECY 99-100, staff recommended that:
  - Staff carry out its five step process
  - Staff implement its approach for addressing risk management issues
  - The Commission approve formation of a joint ACRS/ACNW Subcommittee for peer review

SRM on SECY 99-100

- Commission Directs the staff to:
  - Develop appropriate material safety goals, analogous to the reactor safety goal
  - Use an enhanced participatory process to develop these goals and include, as a goal, the avoidance of property damage
  - Consider whether critical groups can be defined for classes of materials use

SRM on SECY 99-100 (continued)

- Give due consideration to existing radiation protection standards in 10 CFR Part 20, including the 100 millirem per year all-pathways dose limit and the tiered approach provided in the License Termination Rule

- Factor an Agreement State component into the decision making process to avoid duplication

The Five Step Process

- Identify:
  - Candidate regulatory applications for risk-informed approaches;
  - Responsible organizations
- Decide how to modify current regulatory approaches
- Change regulatory approaches
- Implement risk-informed approaches
- Develop or adapt risk-informed tools

ACRS/ACNW Subcommittee Recomendations for NMSS

- Develop a set of principals and a safety goal approach for each of the NMSS regulated activites to guide the implementation of risk-informed and performance-based regulation

- Identify the analytical methods to be applied to implement risk-informed and performance-based regulation on an application specific basis

NMSS Response to ACRS/ACNW Subcommittee Recommendations

- NMSS will develop screening criteria for systematically determining whether to include risk information in specific regulatory applications
- NMSS will examine experience with risk assessment methods, measures, and metrics presently being applied
- NMSS will use enhanced participatory process
- NMSS will develop and begin training program for NMSS and Regional staff, and Agreement States in FY2000

NMSS Progress on Commitments to ACRS/ACNW Subcommittee

- Developed draft screening criteria
- Solicited public participation in the development of criteria and safety goals at April Workshop
- In the process of examining risk assessment methods, measures and metrics presently proposed or applied in NMSS to confirm appropriate application specific approach
- Progress on training development

Current Activities

- Organizational changes made including the creation of steering group
- Evaluating and adjusting ongoing initiatives to make NMSS activities more risk informed
  - ISAs for fuel cycle facilities
  - Byproduct material risk analysis
  - PRA for dry cask storage
  - Transportation package performance and risk studies

Current Activities (continued)

- Increasing interaction with stakeholders on risk issues (CRGR/ACRS and ACNW/the public)
  - Commission briefed in March on the "Risk Informed Regulation Implementation Plan"
  - Public workshop in April

- Developing a three tier approach for training on risk concepts and application of these concepts to nuclear materials and waste arena activities

April Workshop

- Participants included:
  - Government experts from DOE, EPA, OSHA, NRC
  - Representatives from all NMSS regulated industries
  - Public Interest Groups

April Workshop

- Focus:
- Step 1 of the five-step process: Identifying candidate regulatory applications that would benefit from expanded use of risk-information
  - Introduce proposed criteria
  - Refine proposed criteria based on workshop input
  - Examples for application of criteria
  - Input on potential pilot applications
- Solicit input on the development and use of safety goals for nuclear material. Discuss process for further stakeholder interaction.

Participant Recommendations

- Revise Draft Screening Criteria Based on Participant Comments
- Consensus is to Pursue Safety Goals for NMSS Regulated Activities
- Develop a Series of Safety Goals, Not a Single Goal

Participant Recommendations (continued)

- Summarize Results of Workshop
- Inform Commission of Workshop Results
- Plan and Hold a Series of Workshops and Meetings with Different Stakeholders in Various Regional Areas
- Use Workshops to Produce First Draft of Safety Goals
- Develop Risk-Informed Regulatory Process and Safety Goals on Parallel Paths

United States
Nuclear Regulatory Commission

Program Plan on PRA for Dry Cask Storage

Alan Rubin, Edward Rodrick, Christopher Ryder
Probabilistic Risk Analysis Branch
Ed Hackett, Materials Engineering Branch
Charles Tinkler, Safety Margins and Systems Analysis Branch
Office of Nuclear Regulatory Research

Presentation to ACNW/ACRS Joint Subcommittee

May 4, 2000

Overview

- Objective
- Scope
- Potential accident initiators
- Screening analysis
- Frequency/consequence/risk quantification
- Status/schedule

PRA for Dry Cask Storage

- Objective
  - Perform a pilot PRA of a specific spent fuel dry cask storage system
  - Provide information to NMSS necessary to assess the need (1) to perform other site-specific PRA's, (2) to develop additional data, and (3) to perform additional analysis
  - Provide input to Safety Goal assessment, risk-informing 10CFR72 and the inspection programs

PRA for Dry Cask Storage (cont.)

Participants

- RES/DRAA/PRAB- Frequency/probability assessment
- RES/DET/MEB - Multi-purpose canister/overpack structural/thermal analyses
- RES/DSARE/SMSAB - Radionuclide release and dose assessment
- NMSS/SFPO
- Licensee - provide dry cask design and operational data
- Contractors
  - Human reliability analysis, others as necessary

Define Project Scope

- Specific dry cask storage system - Holtec International's HI-STORM 100 System
- System modes to be analyzed (handling, on-site transport, storage)
- Site selection
- Type of events to be considered (normal/accident conditions, site-related natural phenomena and man-made incidents)
- Condition of the fuel in the multi-purpose canister (MPC)
- Results of the assessment (probability of release of radioactive material to the environment; radiation-induced latent cancer fatalities)

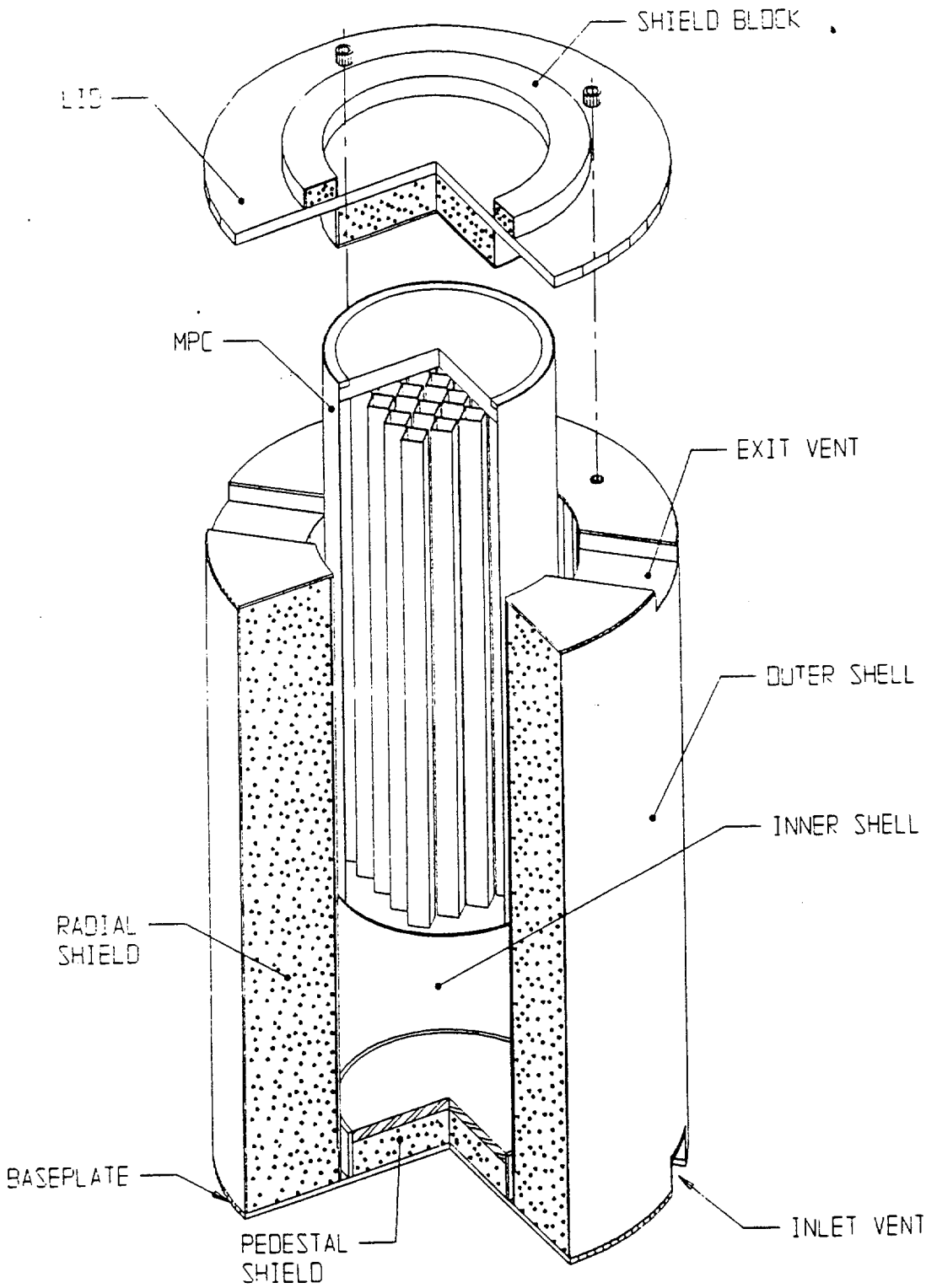

FIGURE 1.1.1; HI-STORM 100 OVERPACK WITH MPC PARTIALLY INSERTED

Identify Potential Accident Initiators

- Use preliminary list of issues provided by NMSS/SFPO, add other issues of safety concern that challenge the functions of the cask leading to a potential release
- Assess initiators identified in other similar studies and PRAs for applicability to this design and site and include as appropriate
- Categorize initiators into accidents types: mechanical impact, thermal, criticality, other
- Address each accident type for each system mode: handling transport, storage

Preliminary Initiating Events

Mechanical Impacts

Handling

- ❑ Cask is dropped (before or after sealing)

Transfer

- ❑ Cask tips from sudden movement/stop during transport

Storage

- ❑ Cask hit by missile (e.g., tornado-driven)
- ❑ Cask struck by truck or aircraft

Preliminary Initiating Events (cont.)

Thermal Accidents

Handling

- High heat load assemblies loaded

Transfer

- Fire from ignited fuel during on-site transport

Storage

- Vent blockage
- High ambient temperature & fire
- Large fire from aircraft crash

Preliminary Initiating Events (cont.)

Criticality Accidents

Handling

- High enrichment fuel loaded

Storage

- Water ingression/flood

Screening/Preliminary Consequence Analysis

Purpose

- To eliminate inconsequential initiators/events from further consideration based primarily on sequence frequencies or release magnitude (determined by extent of cask failure)

- To provide information to determine the need and direction for more detailed analysis

Screening/Preliminary Consequence Analysis (cont.)

Procedure

- Identify/classify available information for initiating events & event/fault trees
- Assess sequence frequency and consequences
- Eliminate insignificant sequences from further consideration
- Determine uncertainty and sensitivity of risk of the events
- Incorporate comments from user/peer reviews

Detailed Frequency Quantification

- Purpose

  To perform detailed frequency assessment of sequences retained from screening analysis

- Determine benefits and costs of obtaining additional data

- Develop & refine inputs to the fault/event tree models accounting for uncertainties, where possible

- Compute sequence frequencies

- Perform sensitivity studies

Perform Consequence and Risk Calculations

- Purpose

  To perform offsite radiological consequence and risk calculations for important sequences and end states

- Determine releases from cask given sequences of event/fault tree model

- Determine offsite consequences

- Perform risk calculation with sequence frequencies and consequences

- Characterize DCS risk estimates

Additional Assessments

Purpose

- To perform additional assessments as necessary to determine changes in risks due to parameters such as:
  - Fuel condition (e.g., burn up)
  - Number of casks
  - MPC/Overpack design

Schedule

- Define Project Scope - June, 2000
- Identify Accident Initiating Events - August, 2000
- Complete Screening/Preliminary Consequence Analysis
  - Draft report - May 2001
  - Completed (includes user/peer reviews) - Oct. 2001
- Detailed Consequence/Risk Calculations and Additional Assessments - TBD following completion of screening analysis
- Draft/Final Report - TBD

A PROCESS FOR RISK-INFORMED REGULATION OF ACTIVITIES
R. M. BERNERO—MAY 4, 2000

The following is an attempt to amplify the recommendation for a risk-informed process that I made at the NRC Workshop on April 25-26, 2000.

Protection Objectives

The first step needed is a clear statement of the level of protection sought. This should be developed in plain language, in qualitative terms, as a statement of safety goals or objectives. Using the disposition of waste as an example, one might say; "Releases from this isolated waste should do no harm to anyone, in the vicinity, in the future." Still staying in qualitative terms, one might say; "No person in future should suffer radiation exposure from these wastes that we would not find acceptable today." One might also consider adding some proviso to the objective to deal with the possibility, especially in near-surface disposal, of inadvertent intrusion.

Measures of Protection

The level of protection expected from the proposed waste isolation must be judged prospectively by some system of measures because the time period of successful isolation is so long. I suggest three judgements, three measures of protection that can be applied to determine if the protection objective is expected to be achieved:

1. The best available estimates of the likely, the expected, or predicted releases, result in exposures that are clearly acceptable.
2. Taking careful account of the uncertainties in available data and in the possible release scenarios, the estimated exposures to the persons in the vicinity will be within the level of public exposure that we find acceptable today.
3. Further probing for weaknesses in the uncertainty analysis indicates an additional margin of protection, in that most outcomes will increase the exposure suffered by about an order of magnitude, to a level we would find tolerable today without need for intervention.

A regulation and supporting guidance can be written to delineate how an applicant and a regulator can make their findings. Of course there need to be other findings as well, such as a finding of adequate site characterization. The regulation and guidance should clearly adhere to the comprehensive exercise of judgement, using quantitative analyses as appropriate to inform that judgement.

Quantitative Measures

Performance assessments, with full treatment of uncertainties, are an appropriate tool for analyzing the degree of waste isolation expected. Recognizing the uncertainties in the results of performance assessments is evidently important. It is also important to

recognize the uncertainty in even setting a single quantitative measure for acceptability. Thus the three measures of protection given above illustrate the spectrum of judgements needed. Consider the following scale of annual exposures:

- 1 mrem (0.01 mSv): negligible exposure, a level sometimes considered as a threshold for regulatory concern
- 10 mrem (0.1 mSv): clearly acceptable exposure, a small fraction of the limit for acceptable public exposure, an approximate limit chosen for licensing or permitting of individual practices
- 100 mrem (1 mSv): the limit for acceptable public exposure, a fraction of average background radiation
- 1000 mrem (10 mSv): the approximate limit for exposure of radiation workers under controlled conditions, a level of background radiation often identified without reductive intervention

For context, please not that all the levels of exposure listed above are well below the levels at which there are deterministic (clinically detectable) effects of ionizing radiation. They are lower, in the range of stochastic (risk of cancer induction) effects, even below the level where experts predict increasing uncertainty in predicting such effects.

This span of three orders of magnitude covers the range of regulatory acceptability. Note that the level typically chosen for assessing the acceptability for the exposure of future populations from disposed waste is at the lower end of this scale, about 10 mrem/year. The results of a good performance assessment do not present a simple single value as a description of performance. In a similar way, the standard for acceptable performance is not a simple single value. The estimated consequences associated with the four levels listed may be described as negligible, clearly acceptable, acceptable and tolerable.

Performance Assessment as Risk-Informing

There is no equation that can be set to calculate acceptable waste disposal performance. Systematic performance assessment can be used to inform the judgements described above to measure protection of the future public. For Judgement No. 1, the point estimate for the base case can be used to describe what is believed to be the most likely outcome, the "expected" value in ordinary language. For Judgement No. 2, a performance assessment, with treatment of both data and scenario uncertainties, can produce a mean value, the "expected" value in risk terminology. For Judgement No. 3, some sort of structured sensitivity analyses are needed, with an emphasis on the balance of judgement used in both structuring these analyses and weighing their results. The role of informed judgement is equally important in matters concerning inadvertent intrusion.

Nuclear Byproduct Materials Risk Review

ACRS/ACNW Joint Subcommittee Meeting
May 4, 2000

Betsy Ullrich, M.S., CHP
Senior Health Physicist

Division of Nuclear Materials Safety
United States Nuclear Regulatory Commission
Region I
475 Allendale Road
King of Prussia, PA 19406

Voice #:**(610) 337-5040**
Fax #s:**(610) 337-5324**
(610) 337-5393
Internet Address: **EXU@NRC.GOV**

NUCLEAR BYPRODUCT MATERIALS RISK REVIEW

The Nuclear Byproduct Materials Risk Review Group

- The Nuclear Byproduct Materials Risk Review Group (the Group) was established in April 1997 in response to Direction Setting Issue 12, "Risk-Informed, Performance-Based Regulation".

- The Group's goals were to

  1. Identify and document a technical basis for a risk-informed approach to regulation of byproduct material.

  2. Develop plans for a graded approach to regulation of byproduct material using risk information.

- The Group was comprised of four NRC representatives and one Agreement State representative with experience in health physics, engineering, risk assessment, and human factors.

  - outlined the information needed to complete its goals

  - established a contract to assist in gathering data and evaluating the risk from uses of byproduct material.

  - performed oversight of the contractor activities, including review and approval of proposed evaluation methods and interim results. The contractor's results are reported in NUREG/CR-6642, "Risk Analysis and Evaluation of Regulatory Options for Nuclear Byproduct Material Systems."

  - performed independent evaluations of the results of the risk assessments.

  - developed and conducted a survey of NRC and Agreement State regulatory personnel who perform licensing and inspection to gather information about the use of byproduct materials to assist in this study. The full survey results are reported in NUREG-1712, "Nuclear Byproduct Material Risk Review, Results of Survey of NRC and Agreement State Materials Licensing and Inspection Personnel."

Scope of the Risk Assessment: nuclear byproduct materials regulated under 10 CFR Parts 30-36 and 39 and the equivalent regulations of Agreement States.

- "Risk" is defined as the product of "consequence" multiplied by "probability".

  "consequence" is the annual whole-body dose, expressed in millirem per year

  "Probability" is expressed as a fraction representing the number of times an event may happen during a particular activity with byproduct material compared to the number of times that activity occurs.

  Because probability has no units, when consequence and probability are multiplied to obtain the risk value, the risk value also has the units of annual whole-body dose.

- For better comparisons, the Group defined discrete nuclear byproduct material systems, based on materials used in similar ways or processes and in similar quantities and forms. (See next page for list of systems.)

- Each system is characterized in terms of the radiological risk to workers and the radiological risk to the public under normal and off-normal conditions.

  - A worker is defined as a person who works directly with licensed material.

  - A member of the public is defined as a person who does not work with licensed material, but may include co-workers in the area where radioactive materials are used or stored (e.g., flagman on a road crew where a portable gauge is used), and family members of a patient to whom radioactive materials were administered.

  - Normal conditions are defined as the routine activities associated with the use of byproduct material, with all physical and administrative controls in place.

  - Off-normal conditions are defined as events in which one or more physical or administrative controls fail.

- The risk assessment does not include:

  - doses to patients from the medical uses. (not workers, not members of the public)

  - transportation that is regulated by 10 CFR Part 71 and DOT.

  - developing and future technologies

Nuclear Byproduct Materials Risk Review - List of systems

1. laboratory use, unsealed, R&D, synthesis quantities
2. laboratory use, unsealed, R&D and testing, etc., prepared compounds
3. laboratory use, unsealed, R&D and testing etc., very small quantities
4. medical, diagnostic nuclear medicine, with generator
5. medical, diagnostic nuclear medicine, without generator
6. medical, therapeutic nuclear medicine
7. medical, brachytherapy, implanted seeds and similar
8. medical, brachytherapy, manual afterloading
9. medical, brachytherapy, LDR
10. medical, brachytherapy, HDR
11. medical, brachytherapy, SR-90 eye applicator
12. medical, teletherapy, single source
13. medical, teletherapy, gamma stereotactic surgery (multiple sources)
14. medical, human use research

*39. medical, diagnostic sealed sources

15. nuclear pharmacy
16. animal use - veterinary

*25. animal use - research

17. well-logging, tracers and field flooding
18. well-logging, sealed sources
19. radiography, shielded room

*40. radiography, field site

20. irradiators, pool
21. irradiators, self-shielded
22. fixed gauges and small calibrators, gamma sources
23. fixed gauges and small calibrators, beta sources
24. portable gauges (gamma and/or neutron sources)
26. measuring systems - XRF
27. measuring systems - GC
28. measuring systems - other (CAM, CAD, etc)
29. other small sealed sources (check sources, calibration sources, mossbauer, etc)
30. other very small sealed sources (watches, spark gaps, electron tubes, etc)
31. manufacturers and distributors - sealed sources
32. manufacturers and distributors - unsealed sources, solids
33. manufacturers and distributors - unsealed sources, liquids
34. manufacturers and distributors - unsealed sources, gases
35. waste disposal - incineration
36. waste disposal - compacting
37. waste disposal - packaging
38. waste disposal - solidification and other processing

* shown out of numerical order, grouped with "like" systems

Scope of the Risk Assessment, continued

- The contractor was asked to use qualitative and, to the extent possible and reasonable, quantitative tools to identify and evaluate risks associated with nuclear byproduct material systems, and to develop an analytical risk-ranking model to compare the systems.

- Other hazards than radiological risk were also considered, such as chemical hazards, physical hazards, public perception, cost of accidents, etc. but were considered **qualitatively**, and were assigned a value of low, medium, or high based on a literature search.

Categories of Radiological Risk Evaluated in this Assessment

(i) individual workers under normal conditions
(ii) individual members of the public under normal conditions
(iii) individual workers under off-normal conditions
(iv) individual members of the public under off-normal conditions
(v) industry-wide, workers under normal conditions
(vi) industry-wide, members of the public under normal conditions
(vii) industry-wide, workers under off-normal conditions
(viii) industry-wide, members of the public under off-normal conditions.

- The risk values for (i) individual workers under normal conditions are expected to be similar to actual doses received by workers in a year (that is, it is expected that workers may receive dose from tasks performed with byproduct materials in the normal course of work with all administrative and engineered barriers operating as designed; the probability of receiving that normal dose is close to 1.)

- The "industry-wide risk" incorporates the total estimated number of facilities performing the activities of a system into a risk value for maximally exposed individuals.

- A single risk value was not calculated for each system.

Method of Radiological Risk Assessment

- Hazard-Barrier-Target analysis: best suited for the range of byproduct material activities.
  - a Hazard is the radioactive source (type, form, quantity) for a particular system (or subset of a system)
  - a Target is a worker or the public
  - a Barrier is any physical control (i.e., process or engineered control) or administrative control that prevents or reduces harm from the Hazard to the Target.
- Assessment Process:
  - describe the systems (hazards, targets, barriers and the tasks performed)
  - categorize barriers (shielding (S), confinement (C); and/or access (A))
  - develop representative scenarios, called sequences, that lead to dose
  - describe sequences as success and/or failure of each S, C, and/or A barrier
    - graphed as Event Trees.
    - Realistic, not necessarily worst-case, sequences were chosen.
    - evaluate consequence in terms of whole-body dose for the possible sequences of the systems for two receptors: worker and public.
  - determine the frequency of the possible sequences of the systems

    The frequency (freq) of a particular sequence (seq) is defined as the frequency of a task being performed, multiplied by the probability (Pr) of an initiating (init) event, multiplied by the probability of the success or failure of each safety function (S, C, or A) for that sequence:

  - calculate consequences (doses) and risk values for each sequence

    A database was established to perform the large number of calculations needed.

    - total expected risk is the sum, for all possible sequences, of the values of the product of each consequence multiplied by its frequency, for the receptor of concern
    - **information and calculations provided to the NRC on the compact disk "BMS-Risk - Byproduct Material System Risk Assessment Database" , which includes the Database File and Users' Guide, can be used to revise or update current analyses and enter new systems**
    - For the 40 systems analyzed, 56 different radionuclides were considered. The database includes a total of 518 tasks analyzing more than 4,000 normal and off-normal sequences, which are supported by more than 27,000 individual calculations.

Uncertainties in Radiological Risk Calculations

- The total uncertainties in risk values are at least one order of magnitude for normal operations in most systems, and at least two orders of magnitude for accident conditions in most systems.

- Although the contractor provided the risk assessment results to two significant figures, the results are better expressed to one significant figure, or it may be more appropriate to express the results in orders of magnitude.

1. **Uncertainties in System Information** may range from as low as a factor of 2 to a factor of 10 or higher.

   - total number of users of material is not known with great certainty
   - variations in use of byproduct material within the same system (radionuclides used, quantities stored, quantities handled, frequency of use, types of activities performed with the material)
   - variations in the use of barriers typical to each system
   - limitations and uncertainties of information gathered from published materials and NRC databases, personal knowledge, interaction with the Group and other NRC personnel, and interactions with fewer than 9 licensees. Examples:

2. **Uncertainties in Dose Calculations** (Consequences) may range from as low as a factor of 2 to a factor of 10 or higher.

   - uncertainties in calculation of external radiation doses (primarily related to scenario assumptions, related to uncertainties in system information)
   - uncertainties in calculation of an internal radiation dose
     - scenario assumptions
     - dose model used (based on ICRP 30)

3. **Uncertainties in Probability** data may range from factors of 2 or 3 for sequences that require reporting to a factor of 10 or higher for sequences that do not require reporting and for which little or no data were available.

   - uncertainties in Nuclear Materials Events Database (NMED) information, used to establish the frequency, or likelihood, of particular sequences occurring.
   - Uncertainties in published data available on the frequency of some sequences for some systems, principally those systems using high-activity sealed sources.
   - Uncertainties in user-provided estimates of frequencies of various sequences based on their experience
   - uncertainties due to frequencies assumed or extrapolated from similar known activities.

Use of "Consequences" in Developing a Risk-Informed Regulatory Approach

- Actual values of the radiological consequences are found only in the database.
- The magnitude of the consequences is reflected in the identification of which barriers and what level of assurance (very high," "high," and "moderate) must be maintained for each system.
  - For sealed sources and devices, the most important barriers are "Confinement" and "Shielding Integrity", whose design and manufacturing are controlled by the manufacturers, not the licensees who use the devices.
  - For all systems, the major barriers that must be maintained are prevention of loss or abandonment, and prevention of access to the material.
  - **Consequence evaluations are important for identifying areas where dose consequences may be so high that, even though the risk is low, regulatory controls remain important. (For example, pool irradiators)**

Survey of Materials Licensing and Inspection Personnel

A survey of NRC and Agreement State personnel was performed to gather information about the byproduct material systems. (NUREG-1712 "Nuclear Byproduct Material Risk Review, Results of Survey of NRC and Agreement State Materials Licensing and Inspection Personnel.")

- to supplement the data used by the contractors in the risk assessment
- to confirm if assumptions made in the risk assessment were reasonable
- to gather information related to
  - types and quantities of materials actually used
  - typical frequency of off-normal events that are not required to be reported
  - typical doses to workers in the various byproduct material systems
  - opinions regarding the safety of the various byproduct material systems and of regulatory decision-making

Evaluation of NUREG/CR-6642 Information

Note: Selected Tables from the Nuclear Byproduct Materials Risk Review Group Report are attached at the end of the hand-out.

- assigned risk values in one significant figure, and in powers of 10, for each risk category for each system. Selected the use of the relative risk values having one significant figure as the most useful in making comparisons. (Tables 1A through 1H and 2A through 2H)

- used the relative risk values for assignment of "ranking" of systems within each risk category, and looked for patterns in the rankings. (Table 3)

- compared normal and off-normal risk categories; compared worker and public risk categories; compared individual and industry risk categories. (Tables 4A through 4F)

- compared the relative risk values for individual workers and individual members of the public risk categories (i through iv) to NRC dose limits (Tables 5A and 5B)

- compared the relative risk values for individual workers under normal conditions to the estimated annual worker doses from NUREG-1712 "Results of Survey of NRC and Agreement State Materials Licensing and Inspection Personnel". (These risk values are expected to be close to annual doses because the probability of receiving the dose is close to 1.) (Table 6)

- compared relative risk values for individual workers to NRC Inspection Prioritization (Tables 7A through 7F).

- developed "Matrix Summary of Risk Assessment Results for Byproduct Materials Activities"

Results of the Radiological Risk Assessment

1. The risk value alone is not sufficient as a basis for regulation of a system. In some cases, such as pool irradiators (System 20), even a small probability of events resulting in acute lethal doses may not be tolerated. Other factors may be considered such as the benefit of the activity and the cost of preventing accidents that occur with small probabilities.

2. No previously unknown radiological consequences that require immediate changes in regulations or policy were identified.

3. Comparing risk results points to the following general trends:

   - Risks under normal conditions are higher than risks under off-normal conditions by several orders of magnitude. The risk values of off-normal conditions are low because the probability of off-normal conditions is low enough to outweigh conditions where the consequences may be large.

   - Under normal conditions, the risk to individual workers is higher than the risk to individual members of the public by a factor of 10 to 100.

   - Under off-normal conditions, the risk to individual workers is higher than the risks to individual members of the public by a factor of 2 to 10.

   - The relative ranking of the systems in the individual categories is much different than the relative ranking of systems in the industry-wide categories, because many of the systems that present higher individual risks are used in very small industries, and many systems that present lower individual risks are used in industries that are very large.

   - The risks to individual workers from normal operations are small fractions of the worker dose limit of 5,000 mrem per year, with the largest fraction 0.4, and only 9 systems with fractions greater than 0.1 (500 millirem per year).

   - The risks to individual members of the public from normal operations are large fractions of the dose limit of 100 millirem per year for members of the public, with three systems having fractions greater than 0.3 (30 millirem per year).

   - The risk values for individual workers under normal conditions agree with the mean annual doses estimated in a survey of regulatory personnel. Some significant differences in certain systems were noted, which may indicate the need to determine if the systems were accurately characterized, or if an additional study of annual doses received by workers is needed.

   - There is no clear relationship between the risk values for individuals under normal conditions for each system and the inspection priority assigned to each system. This may indicate that inspection priority assignment may require additional review, or that

additional study of certain systems is needed to determine if those systems were accurately characterized for the risk assessment. Also, it is important to note that the risk assessment did not include evaluation of risks to patients from medical use of byproduct materials, which may have been considered in assignment of inspection priority.

4. Systems with low risk values may be considered for reduction in regulatory burden. Some systems that should be considered include laboratories handling very small quantities of pre-labeled compounds (System 3); strontium-90 eye applicator (system 11); and gas chromatographs (Systems 27S and 27G). Note that risks to the patient from the strontium-90 eye applicator was not considered in the risk assessment, however, and may affect the decisions made for reduction of regulatory burden.

5. The total uncertainties in radiological risk values are in the range of orders of magnitude. However, expressing the risk values in powers of ten rather than using one significant figure can greatly change the values, resulting in less effective comparisons.

6. Ranking the systems allows easy identification of the systems of higher risk for a given risk category. However, ranking does not provide the comparison of risk that using the actual risk value allows. The relative risk ranking of systems alone is not a sufficient basis for making risk-informed decisions.

7. The risk analysis provided in NUREG/CR-6642, with the BMS-Risk database, has value in its comprehensive review of byproduct materials activities; its development of regulatory options based on consequences (not risk values); its ability to compare risks for the various byproduct materials activities; and its flexibility to revise and update the analyses as improved or new information is available.

Attached: Selected Tables from the Nuclear Byproduct Materials Risk Review Group Report

Table 1A: Risk Assessment Results for Category (a) Individual, Worker, Normal Conditions in System Order

Table 2A: Risk Assessment Results for Category (a) Individual, Worker, Normal Conditions, in Risk Order

Table 3: Comparison of Rankings of Relative Risk for 8 Categories of Risk, in System Number Order

Table 6: Comparison of Results for Category (a) Individual, Worker, Normal Conditions to Results of Estimated Annual Worker Doses (Taken from NUREG-1712 "Results of Survey of NRC and Agreement State Materials Licensing and Inspection Personnel")

Table 7A: Comparison of Individual Worker and Public Risks to NRC Inspection Prioritization, in System Number Order

Table 7E: Comparison of Risks to Individuals, Normal Conditions, to NRC Inspection Prioritization, by NRC Priority Order

Table 1A: Risk Assessment Results for Category (a) Individual, Worker, Normal Conditions in System Order

Systems Unit of risk = millirem per year[1]

No.	Description	Rank	Risk (2 sf[2])	Risk (1 sf)	Risk (10^x)
1.	labs, synthesis quantities	(38)	13	10	10
2.	labs, prepared compounds	(41)	2.2	2	10
3.	labs, very small quantities	(45)	0.0048	0.005	0.01
4.	nuc med, generator	(25)	65	70	100
5.	diag nuc med, w/o generator	(12)	400	500	1000
6.	therapeutic nuc med	(14)	230	300	1000
7.	brachytherapy - seeds	(20)	130	100	100
8.	brachytherapy, manual	(4-)	790	800	1000
9.	brachytherapy, LDR	(21)	100	100	100
10.	brachytherapy, HDR	(29-)	46	50	100
11.	brachytherapy - Sr-90 eye	(46)	0	0	0
12.	teletherapy - single source	(4-)	790	800	1000
13.	teletherapy - gamma stereo	(19)	140	100	100
14.	human use research	(17-)	180	200	1000
*39.	diagnostic device, fixed	(35-)	33	30	100
15.	nuclear pharmacy	(27)	52	50	100
16.	veterinary	(6)	740	800	1000
17	well-logging, tracers etc	(3)	890	900	1000
18	well-logging, sealed sources	(10)	560	600	1000
19.	radiography, shielded room	(16)	190	200	1000
*40.	radiography, field site	(2)	2000	2000	10000
20.	irradiators, pool	(35-)	33	30	100
21.	irradiators, self-shielded	(13)	390	400	1000
22S	fixed gauges etc, gamma	(26)	54	60	100
22G	fixed gauges etc, gamma	(23)	78	80	100
23S	fixed gauges etc, beta	(17-)	180	200	1000
23G	fixed gauges etc, beta	(22)	91	90	100
24S	portable gauges	(15)	210	200	1000
24G	portable gauges	(29-)	46	50	100
25.	animal research	(31)	42	40	100

Table 1A, continued: Risk Assessment Results for Category (a) Individual, Worker, Normal Conditions, in System Order

Systems — Unit of risk = millirem per year[1]

No.	Description	Rank	Risk (2 sf[2])	Risk (1 sf)	Risk (10^x)
26S	measuring systems - XRF	(33)	39	40	100
26G	measuring systems - XRF	(28)	47	50	100
27S	measuring systems - GC	(43-)	0.32	0.3	1
27G	measuring systems - GC	(43-)	0.32	0.3	1
28S	measuring - other	(8)	640	600	1000
28G	measuring - other	(42)	1.2	1	1
29S.	other small sealed sources	(37)	14	10	10
29G.	other small sealed sources	(39)	8.8	9	10
30.	very small sealed sources	(47)	not applicable - no "workers" in this system		
31.	mfr/dist - sealed sources	(1)	3900	4000	10000
32.	mfr/dist - unsealed solids	(7)	670	700	1000
33.	mfr/dist - unsealed liquids	(11)	510	500	1000
34.	mfr/dist - unsealed gases	(9)	630	600	1000
35.	waste disposal - incineration	(40)	2.9	3	10
36.	waste disposal - compacting	(34)	36	40	100
37.	waste disposal - packaging	(24)	67	70	100
38.	waste...other, solidification	(32)	40	40	100

*system number out of order, grouped with like systems
G - generally-licensed
S - specifically-licensed

Note 1: Because Risk = consequences (millirem per year) X probability (unitless), the units of risk are also millirem per year. Because the probabilities are values less than or equal to 1, the risk values are always less than the consequence values. Please note that the risk values may have uncertainties up to one or more orders of magnitude, primarily because of the uncertainties in the probability values.

Note 2: Significant figures - NUREG/CR-6642 reported calculations to 2 sf.

Table 2A: Risk Assessment Results for Category (a) Individual, Worker, Normal Conditions, in Risk Order

Systems Unit of risk = millirem per year[1]

No.	Description	Rank	Risk (2 sf[2])	Risk (1 sf)	Risk (10^x)
31.	mfr/dist - sealed sources	(1)	3900	4000	10000
*40.	radiography, field site	(2)	2000	2000	10000
17.	well-logging, tracers etc	(3)	890	900	1000
8.	brachytherapy, manual	(4-)	790	800	1000
12.	teletherapy - single source	(4-)	790	800	1000
16.	veterinary	(6)	740	800	1000
32.	mfr/dist - unsealed solids	(7)	670	700	1000
28S	measuring - other	(8)	640	600	1000
34.	mfr/dist - unsealed gases	(9)	630	600	1000
18.	well-logging, sealed sources	(10)	560	600	1000
33.	mfr/dist - unsealed liquids	(11)	510	500	1000
5.	diag nuc med, w/o generator	(12)	400	500	1000
21.	irradiators, self-shielded	(13)	390	400	1000
6.	therapeutic nuc med	(14)	230	300	1000
24S	portable gauges	(15)	210	200	1000
19.	radiography, shielded room	(16)	190	200	1000
14.	human use research	(17-)	180	200	1000
23S	fixed gauges etc, beta	(17-)	180	200	1000
13.	teletherapy - gamma stereo	(19)	140	100	100
7.	brachytherapy - seeds	(20)	130	100	100
9.	brachytherapy, LDR	(21)	100	100	100
23G	fixed gauges etc, beta	(22)	91	90	100
22G	fixed gauges etc, gamma	(23)	78	80	100
37.	waste disposal - packaging	(24)	67	70	100
4.	nuc med, generator	(25)	65	70	100
22S	fixed gauges etc, gamma	(26)	54	60	100
15.	nuclear pharmacy	(27)	52	50	100
26G	measuring systems - XRF	(28)	47	50	100
10.	brachytherapy, HDR	(29-)	46	50	100
24G	portable gauges	(29-)	46	50	100

Table 2A, continued: Risk Assessment Results for Category (a) Individual, Worker, Normal Conditions, in Risk Order

Systems Unit of risk = millirem per year[1]

No.	Description	Rank	Risk (2 sf[2])	Risk (1 sf)	Risk (10^x)
25.	animal research	(31)	42	40	100
38.	waste...other, solidification	(32)	40	40	100
26S	measuring systems - XRF	(33)	39	40	100
36.	waste disposal - compacting	(34)	36	40	100
20.	irradiators, pool	(35-)	33	30	100
*39.	diagnostic device, fixed	(35-)	33	30	100
29S	other small sealed sources	(37)	14	10	10
1.	labs, synthesis quantities	(38)	13	10	10
29G	other small sealed sources	(39)	8.8	9	10
35.	waste disposal - incineration	(40)	2.9	3	10
2.	labs, prepared compounds	(41)	2.2	2	10
28G	measuring - other	(42)	1.2	1	1
27S	measuring systems - GC	(43-)	0.32	0.3	1
27G	measuring systems - GC	(43-)	0.32	0.3	1
3.	labs, very small quantities	(45)	0.0048	0.005	0.01
11.	brachytherapy - Sr-90 eye	(46)	0	0	0
30.	very small sealed sources	(47)	not applicable - no "workers" in this system		

*system number out of order, grouped with like systems

G - generally-licensed
S - specifically-licensed
CF - commercial system
GF - generator facility

Note 1: Because Risk = consequences (millirem per year) X probability (unitless), the units of risk are also millirem per year. Because the probabilities are values less than or equal to 1, the risk values are always less than the consequence values. Please note that the risk values may have uncertainties up to one or more orders of magnitude, primarily because of the uncertainties in the probability values.

Note 2: Significant figures - NUREG/CR-6642 reported calculations to 2 sf.

Table 3: Comparison of Rankings of Relative Risk for 8 Categories of Risk, in System Number Order

Systems No.	Description	Risk Analysis Categories (a) Ranking	(b)	(c)	(d)	(e)	(f)	(g)	(h)
1.	labs, synthesis quantities	38	22	26	23-	8	12	8	16
2.	labs, prepared compounds	41	39	31	19	16	2	12	18
3.	labs, very small quantities	45	46	44	44	44	23-	39	42
4.	nuc med, generator	25	29	4	20	35	34	10	35
5.	diag nuc med, w/o generator	12	17	21	35	3	40	13	27
6.	therapeutic nuc med	14	1	1	9	9	3-	1	10
7.	brachytherapy, ...seeds	20	14-	17	32	21-	13	21	29
8.	brachytherapy, manual	4-	14-	2	21	7	10	3	14
9.	brachytherapy, LDR	21	18	9	13-	31	30	15	24
10.	brachytherapy, HDR	29-	19-	13	16	33	29	20	23
11.	brachytherapy - SR-90 eye	46	47	37	45	46	47	43	38
12.	teletherapy - single source	4-	2	10	1	17	19	18-	2
13.	teletherapy - gamma stereo	19	7	23	4	34	32	33	19
14.	human use research	17-	26-	30	25-	15	11	30	33
*39	med diag devices - fixed	35-	9	22	12	30	15	22	13
15.	nuclear pharmacy 27	13	7	29-	21-	26	6	22	
16.	veterinary (diag & therapy)	6	3	12	7	28	31	29	28
17	well-logging, tracers etc	3	33-	8	37	25	22	18-	31
18	well-logging, sealed sources	10	40-	15	5	13	20-	24	15
19.	radiography, shielded room	16	4	3	2	24	16	14	8
*40.	radiography, field site	2	8	6	3	4	6	5	1
20.	irradiators, pool 35-	25	25	23-	39	33	35	41	
21.	irradiators, self-shielded	13	12	24	6	19-	23-	27	4
22S	fixed gauges etc, gamma	26	14-	34	33	11	9	9	12
22G	fixed gauges etc, gamma	23	11	36	36	6	7	7	9
23S	fixed gauges etc, beta	17-	5-	41	43	1-	5	40	36
23G	fixed gauges etc, beta	22	10	42-	42	1-	3-	42	32
24S	portable gauges	15	19-	14	22	5	8	4	6
24G	portable gauges	29-	33-	5	11	12	14	2	3
25.	animal research	31	40-	18-	13-	32	36	26	21
26S	measuring systems - XRF	33	42	29	28	14	25	23	20
26G	measuring systems - XRF	28	38	27	27	10	17	17	17
27S	measuring systems - GC	43-	43-	39-	38	38	27	36	30
27G	measuring systems - GC	43-	43-	39-	39	36	20-	32	25
28S	measuring - other	8	5-	38	40	26	28	11	5
28G	measuring - other	42	45	42-	46	43	45	46	47
29S	other small sealed sources	37	37	45	41	40	37	31	34
29G	other small sealed sources	39	34	46	47	21-	18	16	11
30.	very small sealed sources	47	28	47	29-	47	1	47	7

Table 3, continued: Comparison of Rankings of Relative Risk for 8 Categories of Risk, in System Number Order

Systems		Risk Analysis Categories							
		(a)	(b)	(c)	(d)	(e)	(f)	(g)	(h)
No.	Description	Ranking							
31.	mfr/dist - sealed sources	1	36	16	10	19-	43	28	26
32.	mfr/dist - solids	7	21	33	25-	18	42	41	43
33.	mfr/dist - liquids		11	30	35	31	29	46	4545
34.	mfr/dist - gases	9	26-	28	15	27	44	38	44
35.	waste disposal - incineration	40	31	11	8	45	41	37	37
36.	waste disposal - compacting	34	24	32	34	42	39	44	46
37.	waste disposal - packaging	24	23	18-	18	37	35	25	39
38.	waste... solidification	32	32	20	17	41	38	34	40

Table 6: Comparison of Results for Category (a) Individual, Worker, Normal Conditions to Results of Estimated Annual Worker Doses (Taken from NUREG-1712 "Results of Survey of NRC and Agreement State Materials Licensing and Inspection Personnel")

Systems		Risk	Estimated Doses (mrem/year)		
No.	Description	(mrem/year)	Mean[a]	Modal Range[b]	Median Range[c]
1.	labs, synthesis	10	66	ND	ND-50
2.	labs, prepared	2	26	ND	ND
3.	labs, very small	0.005	9	ND	ND
4.	nuc med, generator [d]	70	294	201-500	101-200
5.	diag nuc med[d]	500	155	101-200	101-200
6.	therapeutic nuc med	300	211	101-200	101-200
7.	brachy, seeds	100	154	51-100	51-100
8.	brachy, manual	800	231	ND-50	51-100
9.	brachy, LDR	100	91	ND-50	ND-50
10.	brachy, HDR	50	76	ND-50	ND-50
11.	brachy - Sr-90 eye	0	56	ND-50	ND-50
12.	teletherapy	800	56	ND	ND-50
13.	gamma stereotactic	100	88	ND-50	ND-50
14.	human use research [e]	200	102	101-200	51-100
*39.	medical devices	30	25	ND-50	ND-50
15.	nuclear pharmacy [f]	50	355	101-200	101-200
16.	veterinary use	800	125	ND-50	51-100
17	well-logging, tracers	900	171	201-500	51-100
18	well-logging, sealed	600	135	ND-50	51-100
19.	radiography, room [f]	200	262	ND-50	101-200
*40.	radiography, field [f]	2000	482	201-500	201-500
20.	irradiators, pool	30	65	ND-50	ND-50
21.	irradiators, self-shi	400	13	ND	ND
22S	fixed gauges, gamma	60	20	ND	ND
22G	fixed gauges, gamma	80			
23S	fixed gauges, beta	200	11	ND	ND
23G	fixed gauges, beta	90			
24S	portable gauges	200	58	ND-50	ND-50
24G	portable gauges	50			
25.	animal research	40	63	ND-50	ND-50

Table 6, continued: Comparison of Results for Category (a) Individual, Worker, Normal Conditions to Results of Estimated Annual Worker Doses (Taken from NUREG-1712 "Results of Survey of NRC and Agreement State Materials Licensing and Inspection Personnel)

Systems		Risk	Estimated Doses (mrem/year)		
No.	Description	(mrem/year)	Mean[a]	Modal Range[b]	Median Range[c]
26S	measuring - XRF	40	27	ND	ND-50
26G	measuring - XRF	50			
27S	measuring - GC	0.3	6	ND	ND
27G	measuring - GC	0.3			
28S	measuring - other	600	11	ND	ND
28G	measuring - other	1			
29S	other small sealed	10	21	ND	ND
29G	other small sealed	9			
30.	Very small sealed	NA?	5	ND	ND
31.	mfr/dist - sealed [f]	400	167	ND	ND-50
32.	mfr/dist - solids [f]	700	362	ND-50	101-200
33.	mfr/dist - liquids [f]	500	236	ND-50	51-100
34.	mfr/dist - gases [f]	600	223	ND-50	ND-50
35.	waste - incineration	3	44	ND-50	ND-50
36.	waste - compacting	40	89	ND-50	ND-50/51-100
37.	waste - packaging	70	129	ND-50	51-100
38.	waste - other [g]	40	111	ND-50	51-100
xx	decon services[h]	xx	785	501-1000	501-1000
xx	nuclear laundries[h]	xx	210	101-200	101-200

Notes

a - This mean was calculated using unequal class intervals provided to respondents, therefore low dose estimates received less weight than high dose estimates. The mean doses listed are therefore somewhat higher than a true mean. This is further demonstrated by the modal and median ranges shown.

b - The modal range is that dose range most frequently listed by respondents .

c - The median range is the dose range with the middle value of those ranges listed by respondents.

d - The risk assessment for System 4 was limited only to the use of generators in a nuclear medicine department; System 5 accounted for risk from activities performed in a nuclear medicine department, other than use of a generator. The survey categories for nuclear medicine were 35.200 including use of generators, and 35.200 without the use of generators.

Table 6, continued: Comparison of Results for Category (a) Individual, Worker, Normal Conditions to Results of Estimated Annual Worker Doses (Taken from NUREG-1712 "Results of Survey of NRC and Agreement State Materials Licensing and Inspection Personnel)

Notes, continued

e - The risk assessment focused only on human use research, most of which can be performed under 35.100. Other types of human use research were not included in the calculation of the risk.

f - The NRC requires radiographers and manufacturers (including nuclear pharmacies) to report the results of individual monitoring. Below are some results for comparison with the above data:

Radiographers: In 1996, 144 radiography licensees reported individual monitoring of 3,631 individuals, of whom 2,537 had measurable doses. The average dose was 380 millirem and the average measurable dose was 550 millirem. Over the period of 1987 through 1996, the number of licensees reporting and the number of workers monitored decreased by more than half, and average doses and average measurable doses increased.

Manufacturers (and nuclear pharmacies): In 1996, 36 manufacturers reported individual monitoring for 2,628 individuals of whom 1,239 had measurable doses. The average dose was 210 millirem and the average measurable dose was 450 millirem. Over the period of 1987 through 1996, the number of licensees reporting increased through 1992 (peak 67) then decreased, the number of workers increased through 1992 (peak 5,210) then decreased again. The average doses decreased as the number of workers increased, but the average measurable doses generally increased over that period.

g - The risk assessment considered primarily "solidification" as an "other" method of waste treatment. Other processes, such as crushing of liquid scintillation vials and decay-in-storage, were also evaluated, but solidification was by far the biggest contributor to dose and risk. The survey listed only solidification of waste.

h - The risk assessment did not include the activities of licensees who perform decontamination services, or nuclear laundries, which were suggested by individuals who took part in the survey. Other activities that were not included in either the risk assessment or the survey were those of licensees who perform services such as installation, removal, and maintenance of devices such as fixed gauges, teletherapy units, and irradiators; calibration services; leak-test services; and laboratories that perform sample analysis for others.

Table 7A: Comparison of Individual Worker and Public Risks to NRC Inspection Prioritization, in System Number Order

Systems No.	Description	Risk (millirem per year) Categories (a)	(b)	NRC Inspection Priority(ies)
1.	labs, synthesis	10	6	5 [1, 2, 3,5]
2.	labs, prepared	2	1	5 [1, 2, 3,5]
3.	labs, very small	0.005	0.004	5, GL, exempt [1, 2, 3,5]
4.	nuc med, generator	70	3	3, 5 [1]
5.	diag nuc med	500	8	3, 5 [1]
6.	therapeutic nuc med	300	300	3, 5 [1]
7.	brachy - seeds	100	10	3, 5 [1]
8.	brachy - manual	800	10	3, 5 [1]
9.	brachy - LDR	100	7	3, 5 [1]
10.	brachy - HDR	50	7	1
11.	brachy - Sr-90 eye	0	0	3, 5 [1]
12.	teletherapy	800	90	3
13.	gamma stereotactic	100	30	3
14.	human use research	200	4	3, 5 [1]
*39.	medical devices	30	20	5 [1]
15.	nuclear pharmacy	50	10	1
16.	veterinary	800	90	5
17	well-logging, tracers	900	2	3
18	well-logging, sealed	600	1	3
19.	radiography, room	200	30	1
*40.	radiography, field	2000	20	1
20.	irradiators, pool	30	4	1
21.	irradiators, self-shi	400	10	3, 5
22S	fixed gauges, gamma	60	10	5
22G	fixed gauges, gamma	80	20	GL
23S	fixed gauges, beta	200	30	5
23G	fixed gauges, beta	90	20	GL
24S	portable gauges	200	7	5
24G	portable gauges	50	2	GL
25.	animal research	40	1	5 [1, 2, 3, 5]

Table 7A, continued: Comparison of Individual Worker and Public Risks to NRC Inspection Prioritization

Systems No.	Description	Risk (millirem per year) Categories (a)	(b)	NRC Inspection Priority(ies)
26S	measuring - XRF	40	0.8	7
26G	measuring - XRF	50	1	GL
27S	measuring - GC	0.3	0.2	7
27G	measuring - GC	0.3	0.2	GL
28S	measuring - other	600	30	5, 7
28G	measuring - other	1	0.01	GL
29S.	other small sealed	10	2	5 [1, 2, 3, 5]
29G.	other small sealed	9	2	GL
30.	very small sealed	NA	3	5, GL, exempt [1, 2, 3, 5]
31.	mfr/dist - sealed	400	2	3, [1, 2, 3]
32.	mfr/dist - solids	700	7	3, [1, 2, 3]
33.	mfr/dist - liquids	500	3	3, [1, 2, 3]
34.	mfr/dist - gases	600	4	3, [1, 2, 3]
35.	waste - incineration	3	3	1
36.	waste - compacting	40	5	1
37.	waste - packaging	70	6	1
38.	waste - other	40	2	1

Priority 1 - inspected each year
Priority 2 - inspected every 2 years
Priority 3 - inspected every 3 years
Priority 5 - inspected every 5 years
Priority 7 - inspected once, no routine re-inspection
[ ] indicates inspection frequency for a specific license of broad scope which could include this activity. Medical licenses of broad scope and Type A manufacturing broad scope licenses are inspected each year; Type A research broad scope licenses, Type A academic broad scope licenses, and Type B manufacturing broad scope licenses are inspected every 2 years; Type C manufacturing broad scope licenses, Type B research broad scope licenses and Type B academic broad licenses are inspected every 3 years; Type C research broad scope licenses and Type C academic broad scope licenses are inspected every 5 years.

GL general licenses are not routinely inspected.

Table 7E: Comparison of Risks to Individuals, Normal Conditions, to NRC Inspection Prioritization, by NRC Priority Order

Systems No.	Description	Risk (millirem per year) Categories (a)	(b)	NRC Inspection Priority(ies)
10.	brachy - HDR	50	7	1
15.	nuclear pharmacy	50	10	1
19.	radiography, room	200	30	1
*40.	radiography, field	2000	20	1
20.	irradiators, pool	30	4	1
35.	waste - incineration	3	3	1
36.	waste - compacting	40	5	1
37.	waste - packaging	70	6	1
38.	waste - other	40	2	1
12.	teletherapy	800	90	3
13.	gamma stereotactic	100	30	3
17	well-logging, tracers	900	2	3
18	well-logging, sealed	600	1	3
31.	mfr/dist - sealed	400	2	3 [1, 2, 3]
32.	mfr/dist - solids	700	7	3 [1, 2, 3]
33.	mfr/dist - liquids	500	3	3 [1, 2, 3]
34.	mfr/dist - gases	600	4	3 [1, 2, 3]
4.	nuc med, generator	70	3	3, 5 [1]
5.	diag nuc med	500	8	3, 5 [1]
6.	therapeutic nuc med	300	300	3, 5 [1]
7.	brachy - seeds	100	10	3, 5 [1]
8.	brachy - manual	800	10	3, 5 [1]
9.	brachy - LDR	100	7	3, 5 [1]
11.	brachy - Sr-90 eye	0	0	3, 5 [1]
14.	human use research	200	4	3, 5 [1]
21.	irradiators, self-shi	400	10	3, 5
16.	veterinary	800	90	5
22S	fixed gauges, gamma	60	10	5
23S	fixed gauges, beta	200	30	5
24S	portable gauges	200	7	5

Table 7E, continued: Comparison of Risks to Individuals, Normal Conditions, to NRC Inspection Prioritization, by NRC Priority Order

Systems No.	Description	Risk (millirem per year) Categories (a)	(b)	NRC Inspection Priority(ies)
*39.	medical devices	30	20	5 [1]
1.	labs, synthesis	10	6	5 [1, 2, 3,5]
2.	labs, prepared	2	1	5 [1, 2, 3,5]
25.	animal research	40	1	5 [1, 2, 3, 5]
29S.	other small sealed	10	2	5 [1, 2, 3, 5]
28S	measuring - other	600	30	5, 7
3.	labs, very small	0.005	0.004	5, GL, exempt [1, 2, 3,5]
30.	very small sealed	NA	3	5, GL, exempt [1, 2, 3, 5]
26S	measuring - XRF	40	0.8	7
27S	measuring - GC	0.3	0.2	7
22G	fixed gauges, gamma	80	20	GL
23G	fixed gauges, beta	90	20	GL
24G	portable gauges	50	2	GL
26G	measuring - XRF	50	1	GL
29G.	other small sealed	9	2	GL
28G	measuring - other	1	0.01	GL
27G	measuring - GC	0.3	0.2	GL

Priority 1 - inspected each year
Priority 2 - inspected every 2 years
Priority 3 - inspected every 3 years
Priority 5 - inspected every 5 years
Priority 7 - inspected once, no routine re-inspection
[ ] indicates inspection frequency for a specific license of broad scope which could include this activity. Medical licenses of broad scope and Type A manufacturing broad scope licenses are inspected each year; Type A research broad scope licenses, Type A academic broad scope licenses, and Type B manufacturing broad scope licenses are inspected every 2 years; Type C manufacturing broad scope licenses, Type B research broad scope licenses and Type B academic broad licenses are inspected every 3 years; Type C research broad scope licenses and Type C academic broad scope licenses are inspected every 5 years.

GL general licenses are not routinely inspected.

Matrix Summary of Risk Assessment Results for Byproduct Materials Activities

Risk Type	System 1	System 2	System 3	System 4	System 5	System 6
a. Radiological, individual workers, normal conditions (mrem/y)	10	2	0.005	70	500	300
b. Radiological, individual public, normal conditions (mrem/y)	6	1	0.004	3	8	300
c. Radiological, individual workers, off-normal conditions (mrem/y)	0.2	0.08	0.0001	30	0.4	100
d. Radiological, individual public, off-normal conditions (mrem/y)	0.02	0.05	0.00009	0.05	0.005	0.7
e. Radiological, industry-wide, workers, normal conditions (rem/y)	1000	300	0.5	20	6000	900
f. Radiological, industry-wide, public, normal conditions (rem/y)	100	20	0.1	0.7	10000	3000
g. Radiological, industry-wide, workers, off-normal conditions (rem/y)	20	6	0.01	9	5	500
h. Radiological, industry-wide, public, off-normal conditions (rem/y)	0.5	0.3	0.002	0.01	0.06	1
i. Financial risk of accidents	L	L	L	M	M	M
j. Financial risk of lost or stolen sources.	L	L	L	L	L	L
k. Regulatory burden costs to licensees and regulators.	H	H	H	H	H	H
l. Risk of contamination (cost of decontaminating).	M	M	M	L	L	L
m. Non-radiological health risk.*	M	M	M	M	M	M
n. Value of use of the system	H	H	H	H	H	H
o. Perceived risk of use of the system.	H	H	H	M	M	M
p. Assurance level for barriers (max)	H	H	M	M	M	M
q. Radiological consequences that cannot be tolerated, even with very low probabilities.	No	No	No	no	no	no

Radiological risk = annual dose consequences [mrem/y or rem/y] x probability[unitless]
S - specifically-licensed materials, G - generally-licensed materials
L - low, M - moderate, H - high, VH - very high
* there is insufficient data for these conclusions

Risk Type	System 7	System 8	System 9	System 10	System 11	System 12
a. Radiological, individual workers, normal conditions (mrem/y)	100	800	100	50	0	800
b. Radiological, individual public, normal conditions (mrem/y)	10	10	7	7	0	90
c. Radiological, individual workers, off-normal conditions (mrem/y)	0.9	60	9	2	0.002	5
d. Radiological, individual public, off-normal conditions (mrem/y)	0.08	0.03	0.2	0.2	0.00004	100
e. Radiological, industry-wide, workers, normal conditions (rem/y)	100	2000	50	20	0	200
f. Radiological, industry-wide, public, normal conditions (rem/y)	100	200	4	4	0	20
g. Radiological, industry-wide, workers, off-normal conditions (rem/y)	0.9	100	3	0.9	0.006	1
h. Radiological, industry-wide, public, off-normal conditions (rem/y)	0.04	0.7	0.1	0.1	0.006	30
i. Financial risk of accidents	L	L	L	M	L	M
j. Financial risk of lost or stolen sources.	L	H	L	M	L	M
k. Regulatory burden costs to licensees and regulators.	H	H	H	H	M	H
l. Risk of contamination (cost of decontaminating).	L	L	L	L	L	L
m. Non-radiological health risk.*	M	L	M	M	M	M
n. Value of use of the system	H	H	H	H	H	H
o. Perceived risk of use of the system.	M	M	M	M	M	M
p. Assurance level for barriers (max)	H	H	H	M	H	VH
q. Radiological consequences that cannot be tolerated, even with very low probabilities.	No	no	no	no	no	possible

Radiological risk = annual dose consequences [mrem/y or rem/y] x probability[unitless]
S - specifically-licensed materials, G - generally-licensed materials
L - low, M - moderate, H - high, VH - very high
* there is insufficient data for these conclusions

Risk Type	System 13	System 14	System 39	System 15	System 16	System 17
a. Radiological, individual workers, normal conditions (mrem/y)	100	200	30	50	800	900
b. Radiological, individual public, normal conditions (mrem/y)	30	4	20	10	90	2
c. Radiological, individual workers, off-normal conditions (mrem/y)	0.3	0.1	0.3	10	2	9
d. Radiological, individual public, off-normal conditions (mrem/y)	6	0.02	0.2	0.01	2	0.003
e. Radiological, industry-wide, workers, normal conditions (rem/y)	30	300	60	100	80	100
f. Radiological, industry-wide, public, normal conditions (rem/y)	2	200	60	10	2	20
g. Radiological, industry-wide, workers, off-normal conditions (rem/y)	0.06	0.1	0.8	30	0.2	1
h. Radiological, industry-wide, public, off-normal conditions (rem/y)	0.3	0.02	0.8	0.1	0.05	0.02
i. Financial risk of accidents	M	M	L	M	L	L
j. Financial risk of lost or stolen sources.	M	L	M	M	L	L
k. Regulatory burden costs to licensees and regulators.	H	H	H	H	H	H
l. Risk of contamination (cost of decontaminating).	L	L	L	L	L	L
m. Non-radiological health risk.*	L	M	L	M	M	M
n. Value of use of the system	H	H	H	H	M	H*
o. Perceived risk of use of the system.	M	M	M	H	M	M*
p. Assurance level for barriers (max)	VH	M	H	H	M	H
q. Radiological consequences that cannot be tolerated, even with very low probabilities.	Possible	no	no	no	no	no

Radiological risk = annual dose consequences [mrem/y or rem/y] x probability[unitless]
S - specifically-licensed materials, G - generally-licensed materials
L - low, M - moderate, H - high, VH - very high
* there is insufficient data for these conclusions

Risk Type	System 18	System 19	System 40*	System 20	System 21	System 22S
a. Radiological, individual workers, normal conditions (mrem/y)	600	200	2000	30	400	60
b. Radiological, individual public, normal conditions (mrem/y)	1	30	20	4	10	10
c. Radiological, individual workers, off-normal conditions (mrem/y)	1	60	20	0.2	0.3	0.03
d. Radiological, individual public, off-normal conditions (mrem/y)	2	40	30	0.02	2	0.007
e. Radiological, industry-wide, workers, normal conditions (rem/y)	400	100	5000	7	200	600
f. Radiological, industry-wide, public, normal conditions (rem/y)	20	50	2000	0.6	20	200
g. Radiological, industry-wide, workers, off-normal conditions (rem/y)	0.7	3	50	0.04	0.5	20
h. Radiological, industry-wide, public, off-normal conditions (rem/y)	0.7	2	40	0.003	10	0.9
i. Financial risk of accidents	L	M	M	M	M	L
j. Financial risk of lost or stolen sources.	H	M	H	L	L	M
k. Regulatory burden costs to licensees and regulators.	H	H	H	M	L	M
l. Risk of contamination (cost of decontaminating).	L	L	L	L	L	L
m. Non-radiological health risk.*	M	M	M	M	M	M
n. Value of use of the system	H*	H*	H*	H	H*	M*
o. Perceived risk of use of the system.	M*	M*	M*	H	M*	M*
p. Assurance level for barriers (max)	VH	VH	H	VH	VH	VH
q. Radiological consequences that cannot be tolerated, even with very low probabilities.	possible	possible	possible	yes	possible	possible

Radiological risk = annual dose consequences [mrem/y or rem/y] x probability[unitless]
S - specifically-licensed materials, G - generally-licensed materials
L - low, M - moderate, H - high, VH - very high
* there is insufficient data for these conclusions

Risk Type	System 22G	System 23S	System 23G	System 24S	System 24G	System 25
a. Radiological, individual workers, normal conditions (mrem/y)	80	200	90	200	50	40
b. Radiological, individual public, normal conditions (mrem/y)	20	30	20	7	2	1
c. Radiological, individual workers, off-normal conditions (mrem/y)	0.01	0.0003	0.0001	1	20	0.7
d. Radiological, individual public, off-normal conditions (mrem/y)	0.004	0.0001	0.0001	0.03	0.4	0.2
e. Radiological, industry-wide, workers, normal conditions (rem/y)	2000	6000	6000	3000	500	30
f. Radiological, industry-wide, public, normal conditions (rem/y)	800	2000	3000	300	70	0.5
g. Radiological, industry-wide, workers, off-normal conditions (rem/y)	30	0.01	0.01	70	100	0.5
h. Radiological, industry-wide, public, off-normal conditions (rem/y)	2	0.01	0.02	4	10	0.1
i. Financial risk of accidents	L	L	L	L	L	L
j. Financial risk of lost or stolen sources.	M	L	L	H	H	L
k. Regulatory burden costs to licensees and regulators.	M	M	M	M	M	H
l. Risk of contamination (cost of decontaminating).	L	L	L	L	L	M
m. Non-radiological health risk.*	M	L	L	L	L	M
n. Value of use of the system	M*	M*	M*	M*	M*	M
o. Perceived risk of use of the system.	M*	M*	M*	M*	M*	H*
p. Assurance level for barriers (max)	VH	M	M	VH	VH	M
q. Radiological consequences that cannot be tolerated, even with very low probabilities.	possible	no	no	no	no	no

Radiological risk = annual dose consequences [mrem/y or rem/y] x probability[unitless]
S - specifically-licensed materials, G - generally-licensed materials
L - low, M - moderate, H - high, VH - very high
* there is insufficient data for these conclusions

Risk Type	System 26S	System 26G	System 27S	System 27G	System 28S	System 28G
a. Radiological, individual workers, normal conditions (mrem/y)	40	50	0.3	0.3	600	1
b. Radiological, individual public, normal conditions (mrem/y)	0.8	1	0.2	0.2	30	0.01
c. Radiological, individual workers, off-normal conditions (mrem/y)	0.1	0.1	0.001	0.001	0.002	0.0001
d. Radiological, individual public, off-normal conditions (mrem/y)	0.01	0.01	0.0007	0.0006	0.0003	0.00003
e. Radiological, industry-wide, workers, normal conditions (rem/y)	300	600	9	20	100	0.6
f. Radiological, industry-wide, public, normal conditions (rem/y)	10	40	9	20	9	0.01
g. Radiological, industry-wide, workers, off-normal conditions (rem/y)	0.7	2	0.04	0.08	7	0.00007
h. Radiological, industry-wide, public, off-normal conditions (rem/y)	0.1	0.3	0.04	0.07	7	0.00003
i. Financial risk of accidents	L	L	L	L	L	L
j. Financial risk of lost or stolen sources.	L	L	L	L	L	L
k. Regulatory burden costs to licensees and regulators.	M	M	M	M	M	M
l. Risk of contamination (cost of decontaminating).	L	L	L	L	L	L
m. Non-radiological health risk.*	L	L	L	L	L	L
n. Value of use of the system	M*	M*	M*	M*	M*	M*
o. Perceived risk of use of the system.	M*	M*	L*	L*	M*	M*
p. Assurance level for barriers (max)	H	H	M	M	H	M
q. Radiological consequences that cannot be tolerated, even with very low probabilities.	no	no	no	no	no	no

Radiological risk = annual dose consequences [mrem/y or rem/y] x probability[unitless]
S - specifically-licensed materials, G - generally-licensed materials
L - low, M - moderate, H - high, VH - very high
* there is insufficient data for these conclusions

Risk Type	System 29S	System 29G	System 30	System 31	System 32	System 33
a. Radiological, individual workers, normal conditions (mrem/y)	10	9	NA	400	700	500
b. Radiological, individual public, normal conditions (mrem/y)	2	2	3	2	7	3
c. Radiological, individual workers, off-normal conditions (mrem/y)	0.00001	0.000007	NA	1	0.04	0.02
d. Radiological, individual public, off-normal conditions (mrem/y)	0.002	0.00002	0.01	0.5	0.2	0.009
e. Radiological, industry-wide, workers, normal conditions (rem/y)	4	100	NA	200	200	80
f. Radiological, industry-wide, public, normal conditions (rem/y)	0.5	30	40000	0.02	0.03	0.01
g. Radiological, industry-wide, workers, off-normal conditions (rem/y)	0.09	3	NA	0.3	0.01	0.003
h. Radiological, industry-wide, public, off-normal conditions (rem/y)	0.01	1	4	0.07	0.0008	0.004
i. Financial risk of accidents	L	L	L	H	H	H
j. Financial risk of lost or stolen sources.	L	L	L	H	M	M
k. Regulatory burden costs to licensees and regulators.	M	M	L	H	H	H
l. Risk of contamination (cost of decontaminating).	L	L	L	L	L	L
m. Non-radiological health risk.*	L	L	L	M	M	M
n. Value of use of the system	L*	L*	H*	H*	H*	H*
o. Perceived risk of use of the system.	M*	M*	L*	H*	H*	H*
p. Assurance level for barriers (max)	M	M	H	H	H	VH
q. Radiological consequences that cannot be tolerated, even with very low probabilities.	no	no	no	no	no	no

Radiological risk = annual dose consequences [mrem/y or rem/y] x probability[unitless]
S - specifically-licensed materials, G - generally-licensed materials
L - low, M - moderate, H - high, VH - very high
* there is insufficient data for these conclusions

Risk Type	System 34	System 35	System 36	System 37	System 38	
a. Radiological, individual workers, normal conditions (mrem/y)	600	3	40	70	40	
b. Radiological, individual public, normal conditions (mrem/y)	4	3	5	6	2	
c. Radiological, individual workers, off-normal conditions (mrem/y)	0.1	4	0.07	0.7	0.5	
d. Radiological, individual public, off-normal conditions (mrem/y)	0.2	1	0.005	0.06	0.07	
e. Radiological, industry-wide, workers, normal conditions (rem/y)	90	0.07	2	10	2	
f. Radiological, industry-wide, public, normal conditions (rem/y)	0.02	0.09	0.1	0.6	0.2	
g. Radiological, industry-wide, workers, off-normal conditions (rem/y)	0.02	0.3	0.004	0.7	0.04	
h. Radiological, industry-wide, public, off-normal conditions (rem/y)	0.0008	0.009	0.0002	0.006	0.006	
i. Financial risk of accidents	H	H	H	H	H	
j. Financial risk of lost or stolen sources.	M	L	L	L	L	
k. Regulatory burden costs to licensees and regulators.	H	H	H	H	H	
l. Risk of contamination (cost of decontaminating).	L	H	M	M	M	
m. Non-radiological health risk.*	M	M	M	M	M	
n. Value of use of the system	H*	M*	M*	M*	M*	
o. Perceived risk of use of the system.	M*	H*	M*	M*	M*	
p. Assurance level for barriers (max)	VH	M	M	H	M	
q. Radiological consequences that cannot be tolerated, even with very low probabilities.	no	no	no	no	no	

Radiological risk = annual dose consequences [mrem/y or rem/y] x probability[unitless]
S - specifically-licensed materials, G - generally-licensed materials
L - low, M - moderate, H - high, VH - very high
* there is insufficient data for these conclusions

Proposed Rule for Domestic Licensing of Special Nuclear Material

ACRS/ACNW PRESENTATION
May 4, 2000

DIVISION OF FUEL CYCLE SAFETY AND SAFEGUARDS
OFFICE OF NUCLEAR MATERIAL SAFETY AND SAFEGUARDS

Part 70 Rulemaking

Background of Proposed Rule

- 1) UF6 release fatality, 2) near criticality event
- Need increased confidence in margin of safety for major SNM facilities
- NRC Staff: Need systematic review of all hazards and documented facility safety basis
- Risk-informed / performance-based rule
- Note: fuel facilities have many diverse processes
- Each process usually autonomous, dependent on correct operator actions for safety

Part 70 Rulemaking

Major Elements Addressing Risk Information

- Rule requires performance of integrated safety analysis (ISA)
- ISA shall identify items relied on for safety (IROFS), i.e. to prevent or mitigate accidents
- Rule mandates establishment of measures to ensure that items relied on for safety are avaliable and reliable
- Rule requires ISA to evaluate compliance with performance requirements

Part 70 Subpart H

Major Elements Addressing Risk Information

- §70.61 Performance requirements on the risk of each accident identified in the ISA
- Existing licensees: ISA Summary submitted to NRC within 4 years

§70.61 - 3 performance requirements

- Must be 'highly unlikely':
  - worker: 100 rem or more, chemical-caused fatality
  - outside 'controlled area' (public): 25 rem or more, >30 mg Uranium intake, irrev. chemical injury
- Must be 'unlikely':
  - worker: more than 25 rem but less than 100 rem, irreversible chemical injury
  - outside 'controlled area' (public): greater than 5 rem but less than 25 rem, chemically-induced transient illnesses, environmental effluent standard
- All processes must be subcritical for normal and credible abnormal conditions (ANSI/ANS 8.1)

§70.61 performance requirements

- continued -

- Chemical standards are only for
  - licensed material e.g., UO_2F_2
  - chemicals produced from licensed material (defined term) e.g., HF from UF_6
  - Defer to OSHA - general worker chemical safety issues
  - Defer to EPA - general public chemical safety issues

- Establishes meaning of 'item relied on for safety':
  - Structures, systems, equipment, components and activities of personnel that are relied on to prevent or mitigate potential accidents that could exceed the performance requirements

§70.62 Mandates ISA Tasks

..shall perform an ISA that..

- Identifies radiological and chemical hazards
- Identifies accident sequences
- Identifies consequence and likelihood
- Identifies Items Relied on for Safety

NRC review of ISA Summary

Acceptance Criteria for Compliance with 70.61

- Criteria for: Applicant's Evaluation of potential accidents against performance requirements
  - Completeness ..of accident identification
  - Correctness .. of consequence evaluations
  - Adequacy .. of likelihood evaluations
- SRP Chapter 3 provides ISA review guidance
- Completeness
  - Used methods in NUREG-1513, ISA Guidance Doc.?
  - Applied methods correctly to individual process?
  - Review accident list in ISA / ISA summary

Completeness Acceptance Criteria

NUREG-1513, ISA Guidance Document

- How to do an ISA: overall plus PHA
- Describes several hazard and accident identification methods
- Flow chart for selection of method appropriate to complexity of process
- Based on widely used AIChE Guidance for OSHA process hazard analysis requirement
- Methods: fault trees, event trees, HAZOP, What If-Checklist, etc.

Consequence Evaluation Acceptance Criteria

- ISA must estimate consequences quantitatively
- SRP criteria for calculations: NUREG/CR-6410
- Purpose of consequence evaluation is to determine gross level of prevention or mitigation required, not to assess risk.

Likelihood Evaluation Acceptance Criteria

- Applicant defines unlikely, highly unlikely
- Applicant develops and applies a method
- Acceptance Criteria for different methods:
  - Quantitative
  - Index method
  - Qualitative

Likelihood Evaluation Acceptance Criteria

- Quantitative method: not required but permitted
- Index method - actually used
  - Consequence and likelihood indices
  - Acceptance criteria in SRP Chap 3 Appendix A
- Qualitative Methods - developed by applicant
  - SRP: based on reliability qualities of the control
    - Defense-in-depth
    - Safety margin
    - Redundancy
    - Independence
    - Availability measures
    - Graded management measures

Likelihood Evaluation Acceptance Criteria

- Double Contingency - ANSI/ANS 8.1 standard recommended qualitative criterion
- Process designs should incorporate sufficient factors of safety to require at least two unlikely, independent, and concurrent changes in process conditions before a criticality accident is possible.

Likelihood Evaluation Acceptance Criteria

Management Measures

- Measures to assure that IROFS are available and reliable when needed
- Configuration management, training, QA, ...
- Maintenance: preventive, functional testing, surveillance for failures, corrective
- Note: most IROFS are administrative, human reliability
- Written procedures, fool proof design, large safety margins, signs, tagging, barriers

Defining characteristics of draft revisions to 10 CFR Part 70

- Pre and post licensing changes
- Risk-informed, performance-based
- Covers major accidents only - Part 20 addresses safety for normal operating conditions/upsets
- Requires 'integrated' look at accident safety
- Consistent with OSHA MOU and compatible & consistent with OSHA and EPA process safety rules
- Explicit accident standards for worker, public, and environmental safety

§70.62 safety program & ISA

Management Measures

- Management measures must be established that provide continuing assurance of compliance with the performance requirements of section §70.61
- Measures may be commensurate with the reduction of the risk attributable to that item.
- Definitions
  - Management measures (e.g., maintenance, configuration management, training, audits, etc.)
  - Available and Reliable

§70.72 facility changes

General Overview

- Allows licensees to make certain changes to its facilities without NRC pre-approval
- Contains requirement for configuration management system
- Any changes which alter the list of items relied on for safety contained in the ISA summary must be submitted quarterly.
- A brief summary of all changes covered by 70.72 submitted annually.

§70.76 backfit

- Included a backfit provision similar to §76.76 with two exceptions
  - "Substantial" test not required per SRM
  - Clarification that compliance with Part 70 does not require a backfit analysis
- Effective for Subpart H requirements after NRC approves that licensee's ISA summary pursuant to §70.66
- For Part 70 requirements other than Subpart H, effective after guidance is developed (e.g. implementation, chemical consequences)

DRAFT

Consequence Severity Categories Based on 10 CFR 70.61

	Workers	Offsite Public	Environment
Consequence Category 3: high	D>1 Sv (100 rem) >AEGL3, ERPG3	D>.25 Sv (25 rem) 30 mg sol U intake >AEGL2, ERPG2	
Consequence Category 2: intermediate	.25 Sv<D≤ 1 Sv >AEGL2, ERPG2 but <AEGL3, ERPG3	.05 Sv<D≤ .25 Sv >AEGL1, ERPG1 but <AEGL2, ERPG2	radioactive release >5000 x Table 2 App B 10 CFR 20
Consequence Category 1: low	accidents of lesser radiological and chemical exposures to workers than those above in this column	accidents of lesser radiological and chemical exposures to the public than those above in this column	radioactive releases producing effects less than those specified above in this column

Corresponding to the two consequence categories of the rule (Categories 2 and 3 above), 70.61 requires corresponding levels of graded protection, that is, engineered and administrative controls and management measures, sufficient to ensure that the likelihood of these adverse events is correspondingly low. The two categories of likelihood thus prescribed are:

Likelihood Category 1: Consequence Category 3 accidents must be "highly unlikely", and

Likelihood Category 2: Consequence Category 2 accidents must be "unlikely."

Implicitly there is a third category into which an accident could fall, that is it could fail to be "unlikely." This category will be referred to in this document as:

Likelihood Category 3: "not unlikely."

Although this category includes unintended events that might actually be expected to happen, others might be less frequent. For this reason the term "likely" was not used for these events.

A major purpose of the ISA is to show compliance with the above system of graded protection. This can be done by using the required tabular summary of identified accident sequences. One acceptable way of doing so is for the applicant to assign two category numbers to each accident sequence, one based on its consequences and one for likelihood. The product of

these two category numbers is then used as a risk index. Listing this calculated risk index in the tabular summary provides a simple method for showing that the graded protection requirements have been met for each accident sequence. A risk index value less than or equal to "4" means the sequence is acceptable. If the applicant provides this risk index in one column of the tabular summary, the reviewer can quickly scan this column to confirm that each accident conforms to the safety performance requirements of 10 CFR 70.61. This system is equivalent to assigning each accident to a cell in a 3 by 3 matrix. This conceptual matrix is shown below. The values in the matrix cells are the risk index numbers.

RISK MATRIX

	Likelihood Category 1: highly unlikely	Likelihood Category 2: unlikely	Likelihood Category 3: not unlikely
Consequence Cat. 3 High	3 acceptable	6 unacceptable	9 unacceptable
Consequence Cat. 2 Intermediate	2 acceptable	4 acceptable	6 unacceptable
Consequence Cat. 1 Low	1 acceptable	2 acceptable	3 acceptable

To demonstrate compliance with the system described above, the applicant needs to assign consequence categories to each identified accident to determine which likelihood requirement applies. Then those accident sequences identified as high or intermediate consequences must be assigned to a likelihood category. To be acceptable, these assigned consequences and likelihoods must have a valid basis, and the applicant must demonstrate this basis in the documentation submitted in the application. The following sections describe an acceptable method for making these assignments.

A.2 CONSEQUENCE CATEGORY ASSIGNMENT

The assignment of consequence categories is based on estimated consequences of prototype accidents. Although consequences of accidents can be determined by actual calculations, it is not necessary that such a calculation be performed for each individual accident sequence listed. Accident consequences may be estimated by comparison to similar events for which reasonably bounding conservative calculations have been made. The applicant should document the bases for bounding calculations of the consequence assignment in the submittal. NUREG/CR-6410, "Nuclear Fuel Cycle Facility Accident Analysis Handbook", March 1998,

DRAFT

Table A-1: Example Accident Sequence Summary And Risk Index Assignment

Process: UO_2 Powder Preparation (PP) Unit Process: Additive Blending Node: Blender Hopper Node (PPB2)

Accident Sequence	Initiating Event (a)	Preventive Control 1 (b)	Preventive Control 2 (c)	Mitigation Control (d)	Likelihood* Index T (e) uncontrolled controlled	Likelihood Category (f)	Conse quence Evaluation Reference	Conse-quence Category (g)	Risk Indices (h=f x g) uncontrolled controlled	Comments & Recommendations
PPB2-1A (Criticality from blender leak of UO_2)	see Control 1 (note 1)	PPB2-C1: Mass Control Failure: Blender leaks UO_2 onto floor, critical mass exceeded frq1 = -1 dur1 = -4	PPB2-C2: Moderation Failure: Suffic. water for criticality introduced while UO_2 on floor frq2 = -2	N/A	unc T = -1 con T = -7	unc 3 con 1	rad 35	3 (crit: 3, rad: 0)	9 3	criticality, consequences = 3 Control 2 fails while Control 1 is in failed state. T = -1-4-2 = -7
PPB2-1B (Rad. release from blender leak of UO_2)	blender leaks UO2 frqi = -1	PPB2-C1: Mass Control success: leaked UO_2 below critical mass, OR	PPB2-C2: Moderation success: no moderator	Ventilation Failure: Ventilated blender enclosure frqm = -2	unc T = -1 con T = -3 con T = -1	unc 3 unmit. 2 mitig. 3	rad 36	unc 2 unmit. 2 mitig. 1	6 unmit. 4 mitig. 3	rad consequences, no criticality unmitigated sequence: control 1 & mitigation fail. T= -1-2 = -3 mitig.: Control 1 fails, mitig. control does not fail. T = -1
PPB2-1C	see Control 1 (note 1)	PPB2-C2: Moderation Failure: Suffic. water for criticality on floor under UO_2 blender frq1 = -2 dur1 = -3	PPB2-C1: Mass Control Failure: Blender leaks UO_2 on floor while water present frq2 = -1	N/A	unc T = -2 con T = -6	unc 2 con 1	rad 35	3 (crit: 3, rad: 0)	6 3	criticality by reverse sequence of PPB2-1A, moderation fails first. Note different likelihood T = -6
PPB2-2	Fire in Blender Room frqi = -2	Fire Suppression Failure: Fails on demand: prf1 = -1	N/A	N/A	unc T = -2 con T = -3	unc 2 con 2	rad 37	2 (rad) 1	4 2	Event sequence is just initiating event plus one control failure on demand

*Likelihood index T is a sum. uncontrolled: T=frqi or frq1; controlled: includes all indices T=a+b+c+d

Note 1: For these sequences the initiating event is failure of one of the controls, hence the frequency is assigned under that control.

Table A-2: Determination of Likelihood Category

Likelihood Category	Likelihood Index T (= sum of index numbers)
1	$T \leq -5$
2	$-5 < T \leq -2$
3	$-2 < T$

Table A-3: Failure Frequency Index Numbers

Frequency Index Number	Based on Evidence	Based on Type of Control**	Comments
-6 *	External event with freq. < 10^{-6} /yr		If initiating event, no controls needed
-4 *	No failures in 30 yrs for hundreds of similar controls in industry	Exceptionally robust passive engineered control (PEC), or an inherently safe process, or 2 independent AEC, PEC, or enhanced admin. controls	Rarely can be justified by evidence, since few systems are found in such large numbers. Further, most types of single control have been observed to fail.
-3 *	No failures in 30 years for tens of similar controls in industry	A single control with redundant parts, each a PEC or AEC	
-2 *	No failure of this type in this plant in 30 years	A single PEC	
-1	A few failures may occur during plant lifetime	A single AEC, an enhanced administrative control, an admin. control with large margin, or a redundant admin. control	
0	Failures occur every 1 - 3 years	A single administrative control	
1	Several occurrences per year	A frequent event	Not for controls, just initiating events
2	Occurs every week or more often	Frequent event, an inadequate control	Not for controls, just initiating events

* Indices less than (more negative than) "-1" should not be assigned to controls unless the configuration management, auditing, and other management measures are of high quality, because, without these measures, the controls may be changed or not maintained.

** The index value assigned to a control of a given type in column 3 may be one value higher or lower than the value given in column 1. Criteria justifying assignment of the lower (more negative) value should be given in the narrative describing ISA methods. Exceptions require individual justification.

DRAFT

Table A-4: Failure Probability Index Numbers

Probability Index Number	Probability of Failure on Demand	Based on Type of Control	Comments
-6 *	10^{-6}		If initiating event, no controls needed
-4 or -5*	10^{-4} - 10^{-5}	Exceptionally robust passive engineered control (PEC), or an inherently safe process, or 2 redundant controls better than simple admin controls (AEC, PEC, or enhanced admin)	Rarely can be justified by evidence, since few systems are found in such large numbers . Further, most types of single control have been observed to fail.
-3 or -4*	10^{-3} - 10^{-4}	A single passive engineered ctrl. (PEC) or an active engineered control (AEC) with high availability	
-2 or -3 *	10^{-2} - 10^{-3}	A single active engineered control, or an enhanced admin control, or an admin control for routine planned operations	
-1 or -2	10^{-1} - 10^{-2}	An admin control that must be performed in response to a rare unplanned demand	

* Indices less than (more negative than) "-1" should not be assigned to controls unless the configuration management, auditing, and other management measures are of high quality, because, without these measures, the controls may be changed or not maintained.

Table A-5: Failure Duration Index Numbers

Duration Index Number	Avg. Failure Duration	Duration in Years	Comments
1	More than 3 years	10	
0	1 year	1	
-1	1 month	0.1	Formal monitoring to justify indices less than "-1"
-2	A few days	0.01	
-3	8 hours	0.001	
-4	1 hour	10^{-4}	
-5	5 minutes	10^{-5}	

DRAFT

Table A-6: Accident Sequence Descriptions

Process: UO_2 Powder Preparation (PP) Unit Process: Additive Blending
Node: Blender Hopper Node (PPB2)

Accident Sequence (see Table A-1)	Description
PPB2-1A Blender UO_2 leak criticality	The initial failure is a blender leak of UO_2 that results in a mass sufficient for criticality on the floor. (This event is not a small leak.) Before UO_2 can be removed, moderator sufficient to cause criticality is introduced. Duration of critical mass UO_2 on floor estimated to be one hour.
PPB2-1B Blender UO_2 leak, rad. release	The initial failure is a blender leak of UO_2 that results in a mass insufficient for criticality on the floor, or mass sufficient for criticality but moderation failure does not occur. Consequences are radiological, not a criticality. A ventilated enclosure should mitigate the radiological release of UO_2. If it fails during cleanup or is not working, unmitigated consequences occur.
PPB2-1C	The events of PPB2-1A occur in reverse sequence. The initial failure is introduction of water onto the floor under the blender. Duration of this flooded condition is 8 hours. During this time, blender leaks a critical mass of UO_2 onto the floor. Criticality occurs.
PPB2-2	Initiating event is a fire in the blender room. Fire is not extinguished in time. Release of UO_2 from process equipment occurs. Offsite dose estimated to exceed 100 mrem.

Table A-7: Criticality Safety Limits and Controls

Process: UO_2 Powder Preparation (PP) Unit Process: Additive Blending
Node: Blender Hopper Node (PPB2)

Safety Control Identifier	Safety Parameter and Limits	Safety Controls Description	Max Value of Other Parameters	Reliability Management Measures	QA Grade
PPB2-C1	Mass Outside Hopper: zero	Mass Outside Hopper: Hopper and outlet design prevent UO_2 leaks, double gasket at outlet.	Full Water Reflection, Enrichment 5%	Surveillance for leaked UO2 each shift	A
PPB2-C2	Moderation: in UO_2 < 1.5 wt. % External Water in area: zero	Moderation In UO_2 : Two sample measurements by two persons before transfer to hopper. External Water: Posting excluding water, double piping in room, floor drains, roof integrity	Full Water Reflection, Enrichment 5%	Drain, roof, and piping are under safety grade maintenance	A

Note: In addition to engineered controls, this table should include descriptions of external initiating events whose low likelihood is relied on to achieve acceptable risk, especially those which are assigned frequency indices lower than -4. The descriptions of these initiating events should contain information supporting the frequency index value selected by the applicant.