122.0 LER No. 315/99-026

Event Description: High Energy Line Break Programmatic Inadequacies Result in Unanalyzed Conditions

Date of Event: October 22, 1999

Plant: Donald C. Cook Nuclear Plant, Units 1 and 2

122.1 Event Summary

Cook LER 315/99-026 (Reference 1), reported the discovery that a number of locations in the plant should be considered unprotected from the effects of postulated high-energy line break (HELB) events. This LER described the following HELB scenarios:

- A HELB in the turbine building that may fail all auxiliary feedwater (AFW) pumps;
- A HELB in the turbine building near the switchgear room that may fail both trains of safety-related and non-safety-related electrical equipment (buses, transformers, motor control centers) in the switchgear room;
- A HELB in the turbine building that may fail emergency diesel generators (EDGs); and
- A HELB in the steam generator blow-down line potentially failing the turbine-driven AFW pump (TDAFPs) (This scenario is applicable to Unit 2 only).

Another HELB scenario in which a pipe break could potentially fail all component cooling water (CCW) pumps was reported in LER 316/98-005 (Reference 2). The risk associated with the additional HELB issues described in LER 315/99-026 (Reference 1) on the HELB scenario described in LER 316/98-005 (and vice versa) was considered. That impact was determined to be negligible. That is, breaks postulated in this analysis in the turbine building have negligible impact on the CCW pumps and the break postulated in Reference 2 has minimal impact on the analysis of conditions described here. (Analysis of the condition reported in LER 316/98-005 was documented as issue #53. Licensee has already provided their comments on the analysis of this LER report).

The estimated increase in the core damage probability (CDP) over a one-year period (i.e., the importance) due to these postulated conditions is 3.9×10^{-4}/year. The uncertainty associated with this frequency results from the lack of HELB calculations that show the subset of HELBs in the turbine building that could fail the different targets (safety-related equipment that is not qualified for harsh environments).

122.2 Event Description

Potential adverse effect of a HELB in turbine building on AFW

Figure 1 is a simplified schematic of the AFW rooms of both Units. Figure 2 shows the ventilation inlets and outlets for each of the AFW rooms. As shown in figure 1, the door between the AFW pump room corridor (pump room vestibule) and the turbine building is maintained open. During a fire, when the temperature reaches 375 degrees F, the fusible link on this door actuates to close it. A HELB is not expected to cause a temperature as high as 375 degrees F in this area. Therefore, this door (door between the turbine building and the pump room vestibule) is not expected to close following a HELB event in the turbine building.

In addition, the door between the TDAFPs of each unit and the pump room vestibule is kept open due to the following reasons. The TDAFP rooms of the two units are structurally designed to withstand an internal pressure of 2 psig. There is a 4-inch steam supply line in each of the two TDAFP rooms. If this line breaks while the TDAFP room door is closed, the room pressure would rise quickly and challenge the structural integrity of the TDAFP room. As shown in figure 1, each unit's TDAFP room shares walls with the other unit's TDAFP room and both of the associated unit's motor-driven AFW pump (MDAFP) rooms. Therefore, failure of the TDAFP room may cause damage to three other auxiliary feedwater pump rooms. In order to eliminate this accident scenario, doors between the pump room vestibule and the TDAFP rooms are maintained open. These doors are equipped with a fusible thermal link designed to close during a HELB or a fire. However, these doors are not expected to close during a HELB in the turbine building since the high temperatures needed to actuate the fusible link will not be reached during a HELB. As a result, during a HELB in the turbine building, steam can enter the TDAFP rooms of both units via the three doors (door between the pump room vestibule and the affected turbine building and the doors to the TDAFP rooms) that are maintained open.

The doors to the MDAFP rooms are maintained closed. Therefore, during a HELB, steam cannot enter these two rooms through the doors. However, as shown in figure 2, the MDAFP room ventilation systems take their suction from the turbine building. Each room takes in 10,000 cubic feet per minute (CFM) from the turbine building. The ventilation system of each MDAFP room actuates when that MDAFP starts. Therefore, after a HELB, when the MDAFPs start, steam will be drawn into the MDAFP rooms via the ventilation system. The dampers installed in the ventilation duct work MDAFPs are curtain-style fire dampers with thermal fusible links. But, they are not designed to close while flow is occurring through the ventilation ducts. Therefore, after a HELB event in the turbine building, steam will enter the MDAFP rooms.

As discussed above, after a HELB, steam will enter the TDAFP rooms of both units through the doors that are left in the open position and MDAFP rooms of the affected unit thorough the ventilation ducts. Since the auxiliary feedwater pumps are not qualified for a harsh environment, all AFW pumps may fail when exposed to steam.

Potential adverse effect of a HELB in safety and non-safety-related switchgear

There is one switchgear room for each Cook plant. Figure 3 is a simplified schematic that shows the relative location of the Unit 1 switchgear room with respect to the turbine building. The switchgear room of each unit is supplied by a supply-only ventilation system. The exhaust occurs through the switchgear room roll-up door. As a result, the door is maintained open. During a fire, upon carbon dioxide actuation, the roll-up door to the switchgear room will close automatically. During a HELB, the roll-up door does not automatically close. A past computer calculation had shown that the switchgear rooms would remain in a mild environment post-HELB with the doors open. However, that calculation did not identify a high-energy source (a high-pressure feedwater heater) located near the open door.

The switchgear room contain safety-related 600 VAC and lower voltage buses. These buses were not designed for harsh environments. After a HELB, both trains of safety-related, safe shutdown, and vital equipment or instruments powered from these buses may not function as designed. Even though the 4KV buses power the risk-significant safety-related pumps, all motor operated valves (MOVs) rely on power from the 600V buses.

Potential adverse effect of a HELB on Emergency Diesel Generators

The EDG room ventilation system exhausts to the turbine building. This exhaust air path is equipped with fire dampers in the wall penetration. But these dampers do not automatically close when a HELB occurs in the turbine building. Steam could flow into the EDG rooms when the fans are not operating. The fans will operate when the EDGs are running. That is, if a HELB occurs after a loss of offsite power event while the EDGs are in operation, steam would not enter the EDG rooms. However, if a HELB occurs in the vicinity of the EDG ventilation exhaust ducts while the EDGs are not running and the ensuing sequence of events results in a loss of offsite power, the EDGs may not function since the EDG equipment is not rated for a harsh environment.

Potential adverse effect of a HELB on the Unit 2 Turbine-Driven Auxiliary Feedwater Pump Battery Train

The 250 VDC N-train and associated support equipment supplies power for the operation of the turbine-driven AFW (TDAFW) system. The supporting components of this system such as the battery charger and power distribution cabinet are located inside the steam generator blow-down flash tank room, which is outside the battery room. If a HELB occurs in the blow-down line, the battery support components stated above will be exposed to a harsh environment. These components are not qualified for a harsh environment. This condition applies to Unit 2 only. Similar components for Unit 1 are located in an area protected by effects from HELBs.

122.3 Modeling Assumptions

Multiple equipment that is vulnerable to harsh environments and lack of appropriate isolation from HELBs in the turbine building create the potential for risk-significant HELB scenarios. In light of the conditions described above, the following five scenarios (A, B, C, D, and E) are considered in the risk analysis:

A. HELBs in pipe chase adjoining the component cooling water (CCW) pump area (This scenario was already analyzed as issue #53. It is included here to determine whether there are any synergistic effects between this and the other HELB scenarios);

B. HELBs in the high pressure heaters or the associated piping in the vicinity of the switchgear room door;

C. HELBs in turbine building (other than those near switchgear room doors);

D. HELBs near the EDG ventilation exhaust; and

E. HELBs in the steam generator blow-down lines near the TDAFP DC power supply.

<u>A. HELBs in pipe chase adjoining the CCW pump area</u>

Reference 3 (ASP report for 1998 precursors) documents the risk-significance associated with a break in the pipe chase adjoining the CCW pump area. The calculated change in core damage frequency (ΔCDF) associated with this break is 3.0×10^{-6}/year. If a break occurs in this area, in addition to failing the Unit 2 CCW pumps, steam may also enter the turbine building and challenge the other components in the building (e.g., auxiliary feedwater pumps) which are not qualified for harsh environments. However, since the core damage frequency (CDF) calculated above is simply the product of the pipe break frequency and the potential to fail reactor coolant pump (RCP) seals in the event of loss of all CCW pumps, the risk associated with a break in the pipe chase (LER 316/98-005) will not change due to the additional equipment vulnerable to harsh environment.

<u>B. HELBs in the high pressure heaters or the associated piping in the vicinity of the switchgear room door</u>

A HELB in the vicinity of the high pressure heater or the associated piping may fail both trains of 600VAC and lower voltage buses as well as the motor control centers supporting both trains of safety-related equipment. In addition, steam from that HELB may enter the elevation below and fail all of the AFW pumps.

According to the LER (Reference 1), if steam enters the switchgear room, all 600V and lower voltage buses (safety- and non-safety-related) of both trains become vulnerable to the harsh environment.

Therefore, the conditional core damage probability (CCDP) associated with a break in this area can be high. However, since the roll-up door opening is used as a ventilation outlet, minor cracks or small steam leaks are not expected to challenge safety-related equipment in the switchgear room. Even though the switchgear room is at elevation 609' and the auxiliary feedwater pumps are located in the lower elevation, a break that is capable of forcing steam against the ventilation output through the switchgear room door is assumed to be capable of forcing steam through the floor grating and into the lower elevation as well. Although the buoyancy forces tend to force steam to upper floors, the 10,000 cubic feet/minute (CFM) intake by the AFW ventilation system may cause entry of steam from this break into the AFWP rooms.

The impact of this break on the EDGs at next lower elevation (587' level) is negligible since both trains of safety-related electrical buses are affected. This makes availability of the EDGs of the affected unit irrelevant. Therefore, the two sequences that dominate the risk are:

Sequence 1 (HELB Scenario B):

- HELB occurs in the high-energy equipment in the vicinity of the switchgear room door;
- Manual or automatic trip occurs and loss of main feedwater occurs (MFW);
- AFW from the affected unit fails;
- MDAFP cross-tied from the unaffected unit fails; and
- Feed-and-bleed cooling fails.

Sequence 2 (HELB Scenario B):

- HELB occurs in the high-energy equipment in the vicinity of the switchgear room door;
- Manual or automatic trip occurs and loss of MFW occurs;
- AFW from the affected unit fails;
- MDAFP cross-tied from the unaffected unit is successful;
- RCP seals fail due to loss of seal cooling and lead to a small LOCA;
- Chemical and volume control system (CVCS) cross-tie from the unaffected unit fails; and
- High-pressure injection fails.

B.1: HELB occurs in the high-energy equipment in the vicinity of the switchgear room door. See figure 4. Only the breaks that occur in zone 3 or large ruptures in zone 8 were assumed to be capable of forcing steam into the switchgear rooms. High-energy line failures in high-energy equipment near the switchgear room door (feedwater heaters and associated piping) are capable of forcing steam into the switchgear room. Twenty-five steam line and main feedwater line failure events were identified for consideration to calculate the frequency of this event. These events occurred between 1985-1999. These events were identified using the Sequence Coding and Search System (SCSS)(Reference 4). Year 1985 was chosen as a cutoff year since full texts for most LERs were unavailable for years prior to that. The descriptions of these 25 LERs were reviewed to determine whether the events described in the LER had the potential to force steam into the switchgear room through the door in spite of the fact that the door was used as a ventilation outlet. To this end, when screening events, the following criteria were used:

- Ruptures or leaks in large pipes (at least two inches in diameter) were included.
- Several leak events were found in the operating experience that pertained to stuck open 3/4" valves, pin hole leaks, and leaks through valve packings. These events were excluded under this criteria. Since the switchgear room door is used as a ventilation outlet, the assumption is that steam leaks cannot force sufficient steam into the switchgear room to challenge safety-related equipment.
- Due to the same reason given above, leaks were not included even if they lasted over a relatively long period (of the order of 15 minutes or higher).
- Only breaks in similar types of components and associated piping located near the switchgear room door are considered potentially important. Therefore, leaks or ruptures that occurred in components not located near the switchgear room doors were screened out.
- Large main steam line or main feedwater line breaks were included irrespective of their locations.

When the above criteria were used, twleve events (References 7, 8, 9, 14, 15, 17, 19, 23, 24, 25, 27, 29) were screened in. Based on References 30, 31, 32, and 33, and using approximate values for 1998 and 1999, there were approximately 1200 critical years between 1985 and 1999. Therefore, using the Bayesian update, the frequency of HELB events is estimated to be 1.0×10^{-3}/critical-year (=12.5/1200).

Only a break in the vicinity of the switchgear room door is capable of forcing steam into the switchgear room. As shown in figure 3, the switchgear room is located on the east side of the turbine building. The condensers are located in the middle of the turbine building. Therefore, line ruptures in the higher or the lower elevations or ruptures in the area west of the condensers that are assumed to be incapable of forcing steam into the switchgear room against the ventilation. Since the twelve ruptures may have occurred in any one of the three elevations on the west or east side of the turbine building (see figure 4), the above frequency is reduced by a factor of six (averaging among three elevations and two sides). Even though the exact lengths of pipes or other components that failed during the twelve events considered in the

frequency calculations are not known, since the location of key components that are vulnerable to failure is spread out within the turbine building is as shown below (also see figure 4), and since most of the twleve failures are associated with components located in one of the six zones (zones 1-6 in figure 4), dividing by a factor of six was deemed as appropriate:

- Elevation 633', East Side: High pressure feedwater heaters 6A and 6B;
- Elevation 633', West side: Moisture separator-reheater;
- Elevation 609', East: High pressure feedwater heaters 5A and 5B, Low pressure feedwater heaters 2A and 2B;
- Elevation 609', West: Low pressure feedwater heaters 1A, 1B, and 1C;
- Elevation 587', East: Low pressure feedwater heaters 3A, 3B, 4A, and 4C; and
- Elevation 587', West: Drain coolers.

Therefore, the frequency of HELB events capable of sending steam into the switchgear rooms is estimated to be 1.7×10^{-3}/critical-year (= $1.0 \times 10^{-2}/6$).

B.2: Manual or automatic trip occurs and loss of MFW occurs. During eight of the twelve events used to estimate the frequency, the operators manually tripped the plant or brought the plant to a control shutdown. In two other events, there were automatic plant trips. Therefore, it is reasonable to assume that as a result of the HELB, the plant will either trip automatically or the operators will trip the plant. Therefore, the probability of this event is assumed to be 1.0.

B. 3: AFW from the affected unit fails. The postulated HELB has the potential to force steam into the 587' elevation. Since the doors to the TDAFPs of both units are open (See Figure 1), both of them are assumed to fail. The MDAFPs of the affected unit take suction at a rate of 10,000 CFM from the turbine hall that has steam, and since these pumps are not qualified for harsh environments, both MDAFPs of the affected unit are assumed to fail. The probability of this event is assumed to be 1.0.

B. 4: MDAFP cross-tied from the unaffected unit fails. The HELB that affects the switchgear room of one unit cannot affect the switchgear room of the other unit due to a wall between the units. However, since both doors to the AFW room vestibule are maintained open, and doors to the Unit 1 and Unit 2 TDAFP are maintained open, the TDAFP of the unaffected unit is assumed to be unavailable. (Note: The availability of TDAFP of the unaffected unit is irrelevant since it cannot supply the AFW cross-tie). However, there is a good possibility that at least one or possible both MDAFPs of the unaffected unit will be available. The basis for this conclusion is as follows:

- The path that steam must follow in order to enter the MDAFP rooms of the unaffected unit is tedious. Steam must travel through the AFW pump vestibule and cross over to the turbine building of the

unaffected unit and be available at the intake supply of the MDAFP rooms of the unaffected unit. (Note: The doors of the MDAFP rooms are normally closed.)

- Even if steam enters the turbine building of the unaffected unit, unless the MDAFPs of the unaffected unit are operating or begin operating at the same time the HELB occurs in the affected unit, ventilation fans will not be taking in air from the turbine building.

- When the MDAFPs start operation in order to supply the feedwater to the steam generators of the affected unit via the cross-tie, most likely the rupture is isolated and the turbine building of the unaffected unit is clear of steam.

- Due to the inventory available in the steam generators, after a reactor trip, the plant can operate for approximately 50 minutes without any feedwater (IPE Table 3.3-3 of Reference 34).

Since the MDAFPs of the unaffected unit will most likely be available, one or both MDAFPs of that unit may be available to inject feedwater. The human error probability associated with failing to establish the AFW cross-tie, according to Table 3.3-3 of Cook IPE is 0.098. Based on Reference 38, Cook has procedures to implement the AFW cross-ties (operating procedure 1/2 OHP 4025.001.001). The functionality of the cross-tie valves is assured by periodic surveillances (tests for full cycle of the cross-tie isolation valves) performed on the cross-tie valves using the surveillance procedure 1/2 OHP 4025.STP.045. Since the feedwater inventory available in the steam generators provide about 50 minutes before steam generator dry out, there is adequate time to establish the cross-tie by cycling the cross-tie valves. Therefore, the human error probability of 0.098 used by the IPE was determined to be reasonable. Compared to this probability, the probability of random mechanical failures (e.g. pumps failing to start, pumps failing to run) will be negligible. Therefore, a reasonable probability of the cross-tie failure is 0.1.

B.5: MDAFP cross-tied from the unaffected unit is successful. Since the probability of failure is 0.1 (see above), the probability of success is 0.9 (1.0-0.1).

B.6: Feed-and-bleed cooling fails. Since the HPI pumps are powered from 4 KV buses, the pumps may be available to feed the reactor coolant system (RCS). However, due to the loss of both trains of 600V and lower power safety-related buses as a result of the postulated HELB, the functionality of all other equipment (e.g., PORVs, capability to throttle HPI flow) cannot be assured. Therefore, the probability of this failure is 1.0.

B.7: RCP seals fail due to loss of seal cooling and lead to a small LOCA. Due to the loss of all AC power to the 600V and lower voltage buses, the behavior of the normally operating CCW and charging pumps is unknown. As a result, the RCP seal cooling may fail and the seals may fail. Based on the RCP seal failure models suggested by NUREG/CR-4550 (Reference 35), for new high temperature seals, the failure probability when seal cooling is lost for a period exceeding 1 ½ hours is 0.19. The likelihood that seal cooling will be restored within 1 ½ hours is assumed to be zero.

B.8: Chemical and volume control system (CVCS) cross-tie from the unaffected unit fails. Since all 600V and lower power buses are lost as a result of the HELB, thermal barrier cooling from the CCW pumps and seal injection from the charging pumps will become adversely affected. It may be possible to provide cooling to the affected unit's RCP seals using a cross-tie from the unaffected unit. However, the CVCS cross-tie was not credited during a HELB (i.e., failure probability was assumed to be 1.0) in this analysis due to several uncertainties associated with its availability. They are:

- *Guidance on re-initiation of seal injection.* The Westinghouse emergency response guidelines caution against re-initiation of seal injection if the RCP seals have heated up. Consistent with this guidance, the licensee's procedure will not reinitiate seal injection if the RCP Seal 1 Outlet Temperature alarms are LIT. Given that the thermal barrier is lost immediately after the break, and seal injection has degraded, these alarms may light before the actual RCP seal failure. As a result, even if the CVCS cross-tie is established, the operators may opt to starve the RCP seals.

- *Procedural Guidance.* Reference 37 provides guidance on how to establish the CVCS cross-tie in the event of a loss of CCW. After a HELB, the time at which the procedure on loss of CCW would be entered is unknown. Whether this procedure can be implemented prior to RCP seal 1 outlet temperature alarms light up is unknown. (Based on Reference 35, seal failure will start at 1 hour.)

- *Material condition of the CVCS cross-tie.* Based on Inspection Report 50-315/99004 (Reference 36), small particulate foreign material was found inside the cross-tie header. The exact amount of particulates is unknown and may be insufficient to fail the seal cooling. However, in combination with other factors mentioned above, the presence of particulates adds a new failure mode.

B.9: High-pressure injection fails. Even if the seals fail, if HPI is available core-damage can be averted. Since the 4 KV buses are available, the HPI pumps will be available. However, since all auxiliaries supporting the HPI function (control power, valve throttle capability) may be affected due to steam in the switchgear room, the probability of this failure is assumed to be 1.0.

Using the frequencies and probabilities, the frequency of Sequence 1 of HELB scenario B can be calculated as follows:

(Frequency of HELBs in the high-energy equipment near the switchgear room door: 1.7×10^{-3} /critical-year) x
(Criticality factor: 0.79 critical-year/reactor calendar-year) x
(Probability of automatic or manual reactor trip and loss of MFW occurs: 1.0) x
(Probability of failing AFW from the affected unit: 1.0) x
(Probability of failing AFW cross-tied from the unaffected unit: 0.1) x
(Probability of failing feed-and-bleed cooling: 1.0) = 1.3×10^{-4}/year.

Using the frequencies and probabilities, the frequency of Sequence 2 of HELB scenario B can be calculated as follows:

(Frequency of HELBs in the high-energy equipment near the switchgear room door: 1.7×10^{-3} /critical-year) x
(Criticality factor: 0.79 critical-year/reactor calendar-year) x
(Probability of automatic or manual reactor trip and loss of MFW occurs: 1.0) x
(Probability of failing AFW from the affected unit: 1.0) x
(Probability of successful AFW cross-tied from the unaffected unit: 0.9) x
(Probability of RCP seal failure: 0.19) x
(Probability of failing CVCS cross-tie to prevent RCP seal failure: 1.0) x
(Probability of failing high pressure injection: 1.0) = 2.3×10^{-4}/year.

C. HELBs in turbine building (other than those near switchgear room doors)

It is assumed that HELBs in any of the zones 1-9 (see figure 1) are capable of affecting AFW pumps. However, in order to prevent double counting, frequency associated with zone 3 (area near the entrance to the switchgear room) and zone 5 (area near the ventilation exhaust ducts to EDGs) are excluded.

It is possible to have a HELB in the turbine building in locations other than near the switchgear room door that would disable the AFW pumps. The scenarios discussed above pertains to HELBs in the feedwater heaters or associated piping near the switchgear room at elevation 609'. These breaks were assumed to be capable of forcing steam to the switchgear room as well as the floor below (elevation 587') and fail the AFW pumps as well. There can be other HELBs which are incapable of forcing steam into the switchgear room (since this door is a ventilation exhaust), and yet capable of forcing steam into the auxiliary feedwater pump rooms at elevation 587' via the intake ventilation ducts of the auxiliary feedwater pump rooms.

Since loss of auxiliary feedwater without losing charging pumps or component cooling water does not result in a seal LOCA, the sequence in which AFW is successful and yet the RCP seals fail is not considered dominant. Therefore, the dominant HELB sequence of interest associated with these breaks is as follows.

Sequence 3 (HELB Scenario C):

- HELB occurs in locations other than near the switchgear room door;
- Manual or automatic trip occurs and loss of MFW occurs;
- HELB causes significant harsh environment in the auxiliary feedwater pump rooms and fails AFW of the affected unit;
- MDAFP cross-tie from the unaffected unit fails; and
- Feed-and-bleed cooling fails.

C.1: HELB occurs in locations other than near the switchgear room door. As discussed previously in sequences 1 and 2, twelve HELB events were identified as capable of affecting both the switchgear room and the auxiliary feedwater pumps.

In addition to these, seven other HELB events were identified from References 5-29 as having the potential to affect auxiliary feedwater pumps. These included a) ruptures in smaller lines (e.g., excess steam vent lines, 2" extraction steam lines) as well as breaks in locations other than heaters or similar components (e.g., MFW pump suction) and leaks that lasted for extended periods (nearly an hour or more). Therefore, a total of 19 failures was identified as having the potential to affect the auxiliary feedwater pumps without affecting the switchgear room. With 19 failures over 1200 critical-years, using the Bayesian update, the frequency of these events is 1.6×10^{-2}/critical-year. (=19.5/1200). However, in order prevent double counting, the frequencies associated with zone 3 (HELB scenario discussed in under section B and zone 5 (HELB scenario discussed in section D below) has to be subtracted. Therefore, the frequency of this event is 1.3×10^{-2}/critical-year = $1.6 \times 10^{-2} - 1.7 \times 10^{-3} - 1.7 \times 10^{-3}$).

C.2: Manual or automatic trip occurs and loss of MFW occurs. Due to reasons discussed earlier, the probability of this failure is assumed to be 1.0.

C.3: HELB causes significant harsh environment in the auxiliary feedwater pump rooms and fails auxiliary feedwater pumps of the affected unit. Only a subset of HELBs considered above is capable of creating a harsh environment inside the auxiliary feedwater pump rooms. For example, even though steam may enter AFW room elevation 587' from HELBs at elevations 609' and 633' through gratings and stairwells, due to buoyant forces steam may not be available in sufficient quantities at elevation 587' where the auxiliary feedwater pump rooms are located. However, in the absence of any analysis, conservatively, it is assumed that all auxiliary feedwater pumps of the affected unit and the TDAFP of the unaffected unit would fail with a probability of 1.0.

C.4: MDAFP Cross-tie from the unaffected unit fails. Due to reasons discussed earlier, the probability of this failure is estimated to be 0.1.

C.5: Feed-and-bleed cooling fails. From the Cook standardized plant analysis risk (SPAR) model, the overall failure probability of feed-and-bleed cooling is 2.9×10^{-2}.

Using the frequencies and probabilities, the frequency of Sequence 3 can be calculated as follows:

(Frequency of HELBs in locations other than near the high-energy equipment near the switchgear room door for both turbine building: 1.3×10^{-2}/critical-year) x
(Criticality factor: 0.79 critical-year/reactor calendar-year) x
(Probability of automatic or manual reactor trip and loss of MFW occurs: 1.0) x
(Probability of failing AFW due to harsh environment: 1.0) x
(Probability of failing AFW cross-tie from the unaffected unit: 0.1) x
(Probability of failing feed-and-bleed cooling: 2.9×10^{-2}) = 3.0×10^{-5}/year.

D. HELBs near the EDG ventilation exhaust
HELBs in zone 5 (see figure 4) are considered in this scenario.

Unlike in the case of the auxiliary feedwater, EDGs are needed if a loss of offsite power occurs after a HELB event. If a loss of offsite power event occurs before the HELB event, the EDG exhaust fans would be running during the HELB and the EDGs will not be affected. However, if a HELB occurs in the vicinity of the EDG ventilation exhaust ducts while the exhaust fans are not running (i.e., EDGs are not running), steam may enter the EDG rooms and affect their functionality. If the ensuing events result in a loss of offsite power, the EDGs may not be available to mitigate it. Therefore, the following sequence was considered to estimate the risk-significance for this HELB scenario:

Sequence 4:

- HELB occurs in the vicinity of EDG exhaust ducts;
- EDGs fail as a result of HELB;
- Manual or automatic trip occurs;
- Offsite power is lost; and
- Core damage occurs given station blackout due to loss of AFW, loss of RCP seal cooling, or loss of all DC power.

D.1: HELB occurs in the vicinity of EDG exhaust ducts. Since the EDG ventilation fans exhaust (rather than intake from) the turbine building, only ruptures in the vicinity of the exhaust ducts are assumed to force enough steam to the EDG rooms. Since the EDG rooms are located underneath the switchgear room and the sources of HELB are similar, the frequency used for the HELB events that had the potential to affect the switchgear rooms (1.7×10^{-3}/critical-year) is used here as well.

D.2: Manual or automatic trip occurs. Due to the HELB, the plant will either trip automatically or the operators will trip the plant. Therefore, the probability of this event is assumed to be 1.0.

D.3:Offsite power is lost. Even if the EDGs fail, unless the plant loses offsite power after the HELB, there is no impact. According to table D-3 of Reference 31, 16 of a total of 33 loss of offsite power events that between 1987-1995, occurred after a reactor trip event. Therefore, the probability of a loss of offsite power after a reactor trip is 8.3×10^{-3} (=16.5/1985.5) where 1985 is the total number of trips.

D.4: EDGs fail as a result of HELB. The EDGs are not qualified for the harsh environment introduced during a HELB. Therefore, they are assumed to fail. A probability of 1.0 is assumed.

D.5: Core damage occurs given station blackout. When a station blackout (SBO) has resulted from the loss of the EDGs and offsite power, core damage can result due to loss of auxiliary feedwater, loss of

RCP seal cooling and core uncovery due to loss of injection, or loss of all DC power (as a result of battery depletion). The probabilities of each of these events can be estimated as follows:

Loss of AFW: The EDGs and AFW pumps are located in elevation 587'. As a result, the TDAFPs of both units could be affected by the HELB that failed the EDGs. The MDAFPs of the affected unit will be unavailable due to loss of power. Even if power was recovered before steam generator dry out, steam in the turbine building may disable the MDAFPs of the affected unit. However, due to reasons discussed earlier in this report, the MDAFPs of the unaffected unit will most likely be available. As a result, AFW may be available from the cross-tie. The probability of failing AFW from the cross-tie of the unaffected unit is approximately 0.1 (See sequence 3 above).

Loss of RCP seal Cooling: If the offsite power is not recovered within one hour, since the EDGs are unavailable, the RCP seals will start failing (ref. 35). In 1½ hours, the probability of failing the RCP seals reaches its maximum value of 0.19 (Ref. 35). Based on Reference 39 (Figure 3-4), the probability of failing to recover offsite power before 1½ hours is approximately 0.2. Therefore, the probability of failing the RCP seals during the above scenario is approximately 0.019 (= 0.2 x 0.19 a ½). (The factor of ½ is used to accommodate the fact that the RCP seal failure probability changes from zero to 0.19 between 1½ hours and 2 hours)

Even if RCP seals fail, if injection can be recovered before core uncovers, core damage can be averted. For Cook, based on SPAR model, 0.5 hours is expected to elapse after a seal LOCA prior to core uncovery. Based on Reference 39 (Figure 3-4), the probability of recovering offsite power before 2 hours given that offsite recovery did not take place within 1½ hours is approximately 0.75. Therefore, the probability of core-damage due to failing RCP seals is .015 (0.75 x 0.019).

Loss of DC power: Even if loss of AFW and RCP seal failure are averted, if offsite power is not recovered before the batteries deplete, decay heat removal and reactor coolant injection will become unavailable and this will lead to core uncovery. The Cook SPAR model uses a probability of 0.0065 for failing to recover either offsite power or either of the EDGs within 4 hour. Based on Reference 39, the probability of failing to recover offsite power within 4 hours for plant-centered loss of offsite power events is approximately 0.075. If steam enters the emergency rooms, most likely, the EDGs will fail as result of shorts in components such as bushings, diodes, transformers, or similar components. Even though such failures would be easily recognizable, there is significant uncertainty on whether they can be repaired within 4 hours (Ref. 40). Therefore, only recovery of offsite power is credited and the probability of 0.075 is used.

Therefore, the probability of core damage in the event of a station blackout is approximately 0.19 (=0.015 + 0.075 + 0.1).

Using the frequencies and probabilities, the frequency of Sequence 4 can be calculated as follows:

(Frequency of HELB *in the vicinity of EDG exhaust ducts*: 1.7 x 10^{-3}/critical year) x
(Criticality factor: 0.79 critical year/reactor calendar year) x

(Probability of automatic or manual reactor trip: 1.0)
(Probability of losing offsite power within 24 hours after HELB: 8.3×10^{-3}) x
(Probability of failing both EDGs as a result of HELB: 1.0) x
(Probability of core damage occurs given station blackout: 0.19) = 2.1×10^{-6}/year

E. HELBs in the steam generator blow-down lines near the TDAFP DC power supply

The 250 VDC N-train and associated support equipment supplies power for the operation of the TDAFW system. The supporting components of this system, such as the battery charger and power distribution cabinet, are located inside the steam generator blow-down flash tank room, which is outside the battery room. If a HELB occurs in the blow-down line in the area of concern, the battery support components stated above will be exposed to a harsh environment. These components are not qualified for a harsh environment. (This condition applies to Unit 2 only.) If the HELB in the area of concern results in a manual or an automatic trip and fails the turbine-driven auxiliary feedwater pump, the decay heat removal may be accomplished by MDAFPs. Since a HELB has occurred, it is conservatively assumed that MFW is unavailable. In the event of all AFW failure, feed-and-bleed cooling can be used to remove decay heat. Since only the TDAFP is affected, the risk-significance associated with this condition, by itself, is determined to be negligible. In order to demonstrate that the sequence is not risk-significant, the following sequence is considered:

Sequence 5:

- HELB occurs in near steam generator blow-down flash tank room;
- Manual or automatic trip occurs and loss of MFW occurs;
- HELB causes failure of TDAFP;
- MDAFPs of the affected unit fail;
- MDAFP cross-tie from the unaffected unit fails; and
- Feed-and-bleed cooling fails.

E.1: HELB occurs in near steam generator blow-down flash tank room. The frequency of a HELB occurring near the steam generator blow-down room flash tank room would be a fraction of the total frequency of a HELB in the turbine building. Therefore, using the frequency used in sequence 2 (1.6×10^{-2}/year) will be a conservative upper bound.

E.2: Manual or automatic trip occurs and loss of MFW occurs. Conservatively, this probability is assumed to be 1.0.

E.3: HELB causes failure of TDAFP. The TDAFP battery train and auxiliaries are not qualified for a harsh environment. Therefore, conservatively, this fraction is assumed to be 1.0.

E.4: MDAFPs of the affected unit fail. From the Cook SPAR model, the failure probability of AFW when TDAFP is unavailable is 3.3×10^{-4}.

E.5: MDAFP cross-tie from the unaffected unit fails. For reasons discussed under sequence 3, this probability is 0.1.

E.6: Feed-and-bleed cooling fails. From the Cook SPAR model, the overall failure probability of feed-and-bleed cooling is 2.9×10^{-2}.

Using the frequencies and probabilities, the frequency of Sequence 5 can be calculated as follows:

(Frequency of HELBs near steam generator blow-down flash tank room: 1.7×10^{-2}/critical year) x
(Criticality factor: 0.79 critical year/reactor calendar year) x
(Probability of manual or automatic trip occurs and loss of MFW occurs: 1.0) x
(Probability of failing TDAFP due to HELB: 1.0) x
(Probability of failing MDAFPs: 3.3×10^{-4}) x
(Probability of failing AFW from the cross-tie of the unaffected unit: 0.1)
(Probability of failing feed-and-bleed cooling: 2.9×10^{-2}) = 1.2×10^{-8}/year

The frequency of this sequence is significantly lower than the other sequences and therefore, it can be screened out.

122.4 Analysis of Results

The risk associated with this issue is dominated by Sequences #1, #2 of HELB scenario B, #3 of HELB scenario C, and #4 of scenario D discussed in the previous section. Sequence 1 (HELB in feedwater heater or associated piping failing both trains of 600V safety-related electrical equipment in the switchgear room and AFW pumps) has a ΔCDF of 1.3×10^{-4}/year. Sequence 2 (HELB in feedwater heater or associated piping failing both trains of 600V safety-related electrical equipment in the switchgear room and RCP seal failure) has a ΔCDF of 2.2×10^{-4}/year. A critical assumption in calculating this frequency is that any HELB near the switchgear room door capable of forcing steam into the switchgear room against ventilation air flow through the switchgear room door is also capable of sending steam to the floor below (elevation 587') and failing the AFW pumps. Sequence #3 (all HELBs in turbine building other than those near the switchgear room door) has a ΔCDF of 3.0×10^{-5}/year. The critical assumption here is that HELBs in any location (excluding minor leaks that last for a short duration) are capable of generating enough steam to enter the AFW rooms of both units through open doors and ventilation ducts used for intake and failing them. Sequence #4(HELBs that force steam into the EDG rooms) contributes ΔCDF of 2.1×10^{-6}/year.

Therefore, the total ΔCDF of this issue is 3.9 x 10^{-4}/year. The uncertainty associated with this frequency results from the lack of HELB calculations that show the subset of HELBs in the turbine building that could fail the different targets (safety-related equipment that is not qualified for harsh environments).

122.5 References

1. LER 315/99-026, Rev. 0, "High Energy Line Break Programmatic Inadequacies Result in Unanalyzed Conditions," November 19, 1999.

2. LER 316/98-005, "Potential for High Energy Line Break to Degrade Component Cooling Water System," August 14, 1998.

3. "Precursors to Potential Severe Core Damage Accidents: 1998," NUREG/CR-4674, Vol. 27 (to be published).

4. "Sequence Coding and Search System for Licensee Event Reports User's Guide," NUREG/CR-3905, August 1984.

5. LER 305/85-017, "Ruptured Excess Steam Vent Line," August 8, 1985.

6. LER 321/86-018, "Leaking Valve Causes Level Switch Failure Resulting in Turbine Trip and Reactor Scram," April 20, 1986.

7. LER 287/86-002, "Manual Reactor Trip Following a Heater Drain Pipe Rupture," October 17, 1986.

8. LER 244/86-004, "Manual Reactor Trip due to Large Steam Leak in Turbine Building," August 28, 1986.

9. LER 366/86-010, "Steam Leak Causes Relay Actuation Resulting in Turbine Trip and Reactor Scram," May 23, 1986.

10. LER 255/87-016, "Errant Valve Closure Results in Manual Reactor Trip," June 19, 1987.

11. LER 281/86-020, Rev. 2, "Reactor Trip and Main Feedwater Pipe Rupture," March 31, 1987.

12. LER 440/87-027, Rev. 1, "Loss of Main Condenser Vacuum Results in Manual Reactor Shutdown," July 31, 1987.

13. LER 280/87-027, "Spurious Engineered Safety Feature Actuation Due to Water Intrusion Into Control Panel," November 25, 1987.

14. LER 368/89-006, "High Pressure Extraction Steam Line Rupture due to Pipe Wall Thinning Resulted in a Reactor Trip Caused by High Reactor Coolant System Pressure," May 18, 1989.

15. LER 280/90-003, Rev. 1, "Unit 1 LP Heater Drain System Pipe Leak Due to Excessive Pipe Wall Thinning," October 29, 1990.

16. LER 455/90-010, Rev. 1, "Manual Reactor Trip and Main Steam Isolation due to Sample Probe Weld Failure," June 17, 1991.

17. LER 423/90-030, Rev. 2, "Manual Reactor Trip Due to Moisture Separator Reheater Piping Line Breaks," June 6, 1991.

18. LER 331/91-001, "Manual Scram Shutdown of Plant Due to Steam Leak in the Heater Bay," January 31, 1991.

19. LER 336/91-021, Rev. 1, "Manual Reactor Trip Due to Plant Conditions Resulting from a Rupture in the Reheater Drain Tank to High Pressure Feedwater Heater Pipe," January 28, 1993.

20. LER 318/92-001, "Manual Trip Following Minor Feedwater Leak and Subsequent Electrical Grounds," January 31, 1992.

21. LER 309/92-007, "Erosion/Corrosion Failure of Moisture Separator Reheater Scavenging Vent Piping Elbow," September 15, 1992.

22. LER 318/92-007, "Manual Trip Caused by Stuck Open 23 Moisture Separator/Reheater Relief Valve," October 27, 1992.

23. LER 328/93-001, "Extraction Steam Line Rupture Causes High Generator Output Voltage and Manual Reactor Trip," March 31, 1993.

24. LER 336/95-032, Rev. 2, "Manual Reactor Trip Due to Unisolable Secondary Steam Leakage," September 2, 1998.

25. LER 270/96-004, "Secondary Drain Line Rupture Results in a Manual Reactor Trip," December 9, 1996.

26. LER 280/97-001, Rev. 1, "Shutdown Due to Steam Drain Line Weld Leak," June 10, 1997.

27. LER 482/97-008, "Manual Reactor Trip Due to A Steam Leak in A Non-Safety Related Third Stage Extraction Steam Isolation Valve," June 16, 1997.

28. LER 318/98-004, "Manual Plant Trip Due to Moisture Separator Reheater Vent Line Rupture," August 24, 1998.

29. LER 483/99-003, "Manual Reactor Trip Due to Heater Drain System Pipe Rupture Caused by Flow Accelerated Corrosion," September 10, 1999.

30. F. T. Stetson, et. al., "Analysis of Reactor Trips Originating in Balance of Plant Systems," NUREG/CR-5622, September 1990.

31. J. P. Poloski, et. al., *Rates of Initiating Events at U.S. Nuclear Power Plants: 1987-1995*, NUREG/CR-5750, February 1999.

32. "Office for Analysis and Evaluation of Operational Data, Annual Report," NUREG/CR-1272 Vol. 10.

33. "Office for Analysis and Evaluation of Operational Data, Annual Report," NUREG/CR-1272 Vol. 11.

34. *Donald C. Cook Nuclear Plant Units 1 and 2, Individual Plant Examination Revision 1*, October 1995.

35. "Analysis of Core Damage Frequency for Internal Events: Expert Judgement Elicitation," NUREG/CR-4550, Vol. 2, April 1989.

36. U.S. Nuclear Regulatory Commission, Region III, D.C. Cook Inspection Report 50-315/99004(DRP); 50-316/99004(DRP), May 14, 1999.

37. American Electric Power Cook Plant Procedure O2-OHP 4022.015.004, "Loss of Component Cooling Water," Rev. 5, Change 2.

38. Electronic mail communication from James Raleigh (American Electric Power Company) to Sunil Weerakkody (U.S. Nuclear Regulatory Commission), March 28, 2000.

39. "Evaluation of Loss of Offsite Power Events at Nuclear Power Plants: 1980-1996," NUREG/CR-5496, November 1998.

40. Electronic mail communications between William Raughley (U.S. Nuclear Regulatory Commission) and Sunil Weerakkody (U.S. Nuclear Regulatory Commission) dated March 29, 2000.

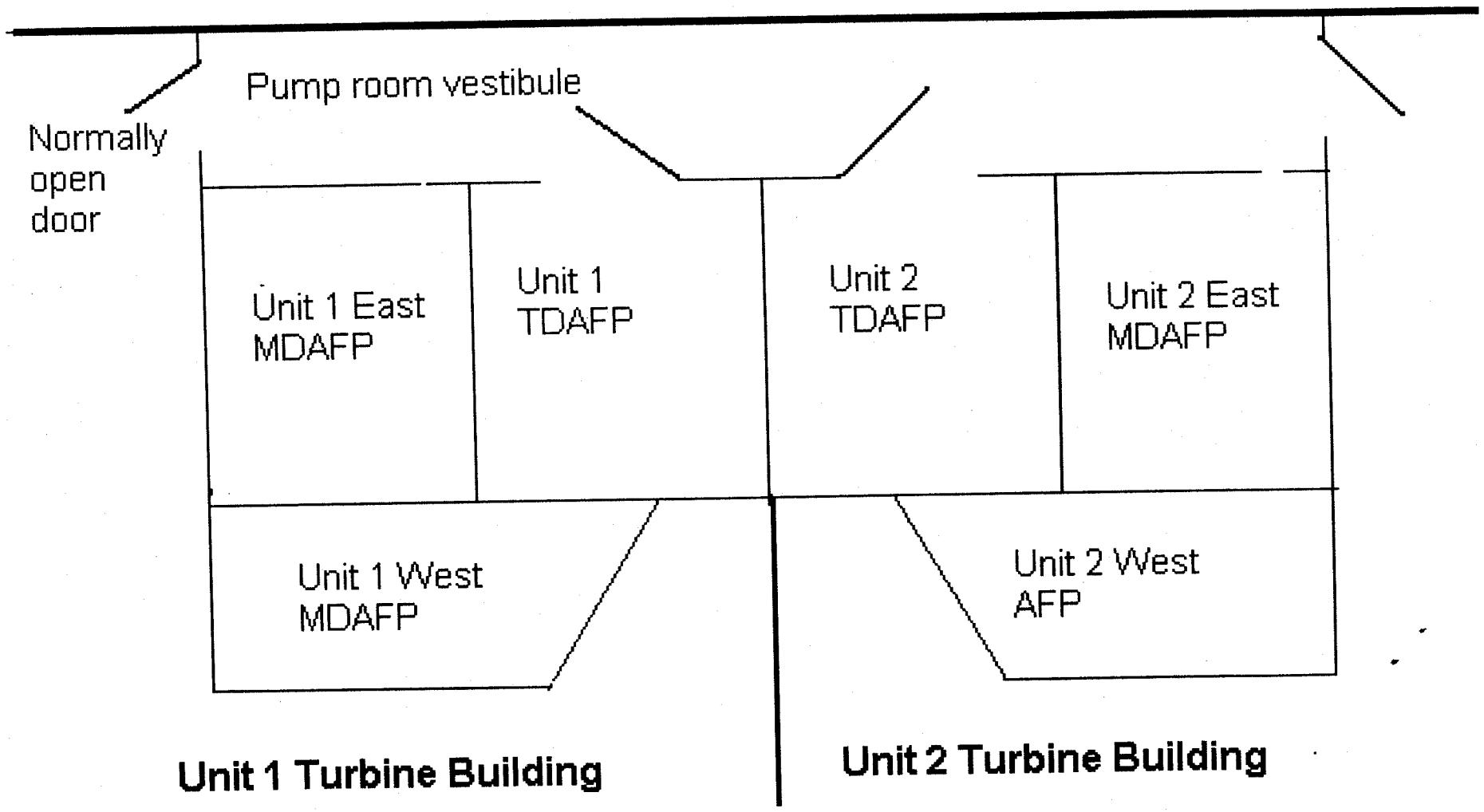

FIGURE 1: AFW Room layout (EL 587')

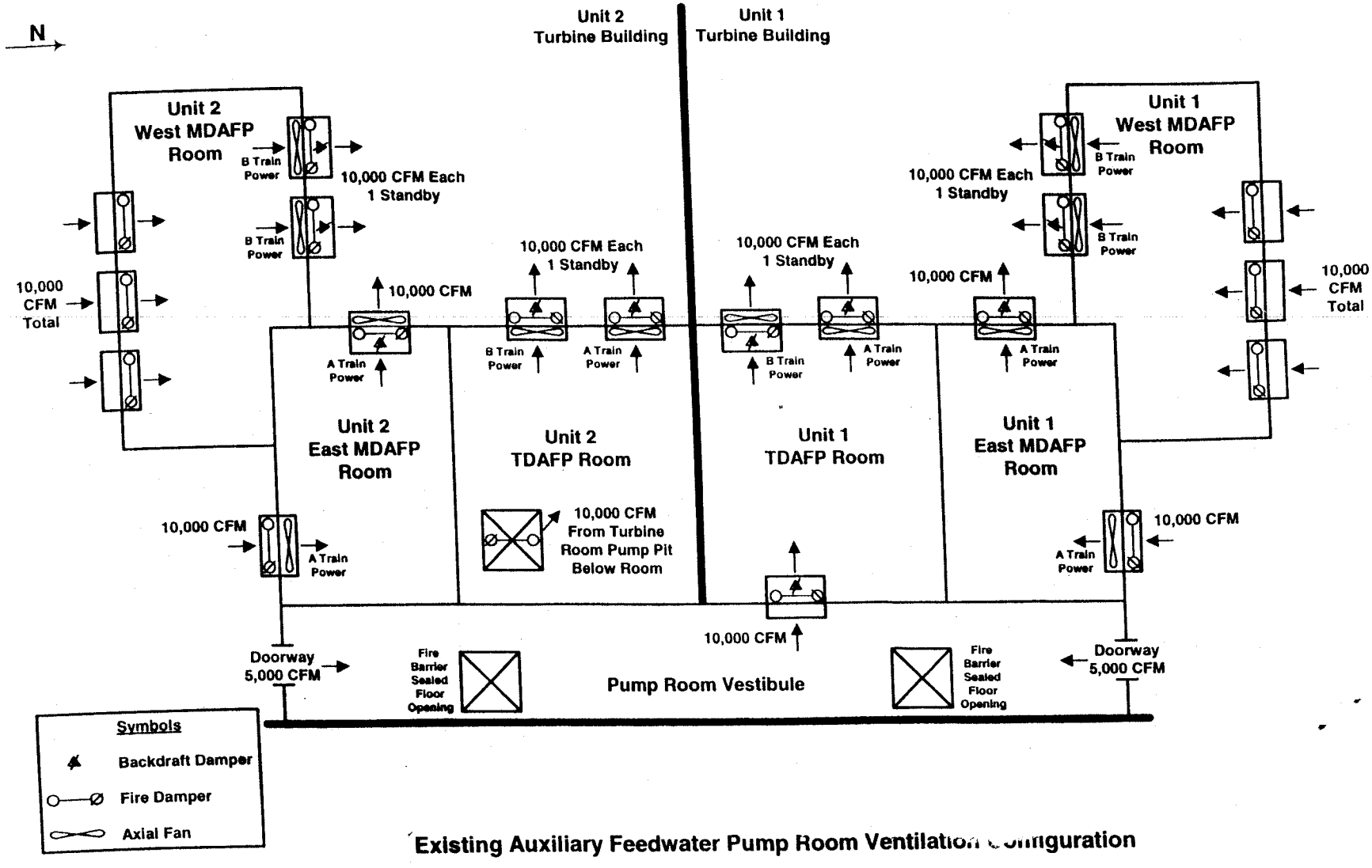

Existing Auxiliary Feedwater Pump Room Ventilation Configuration

Figure 2 (Issue No. 122)

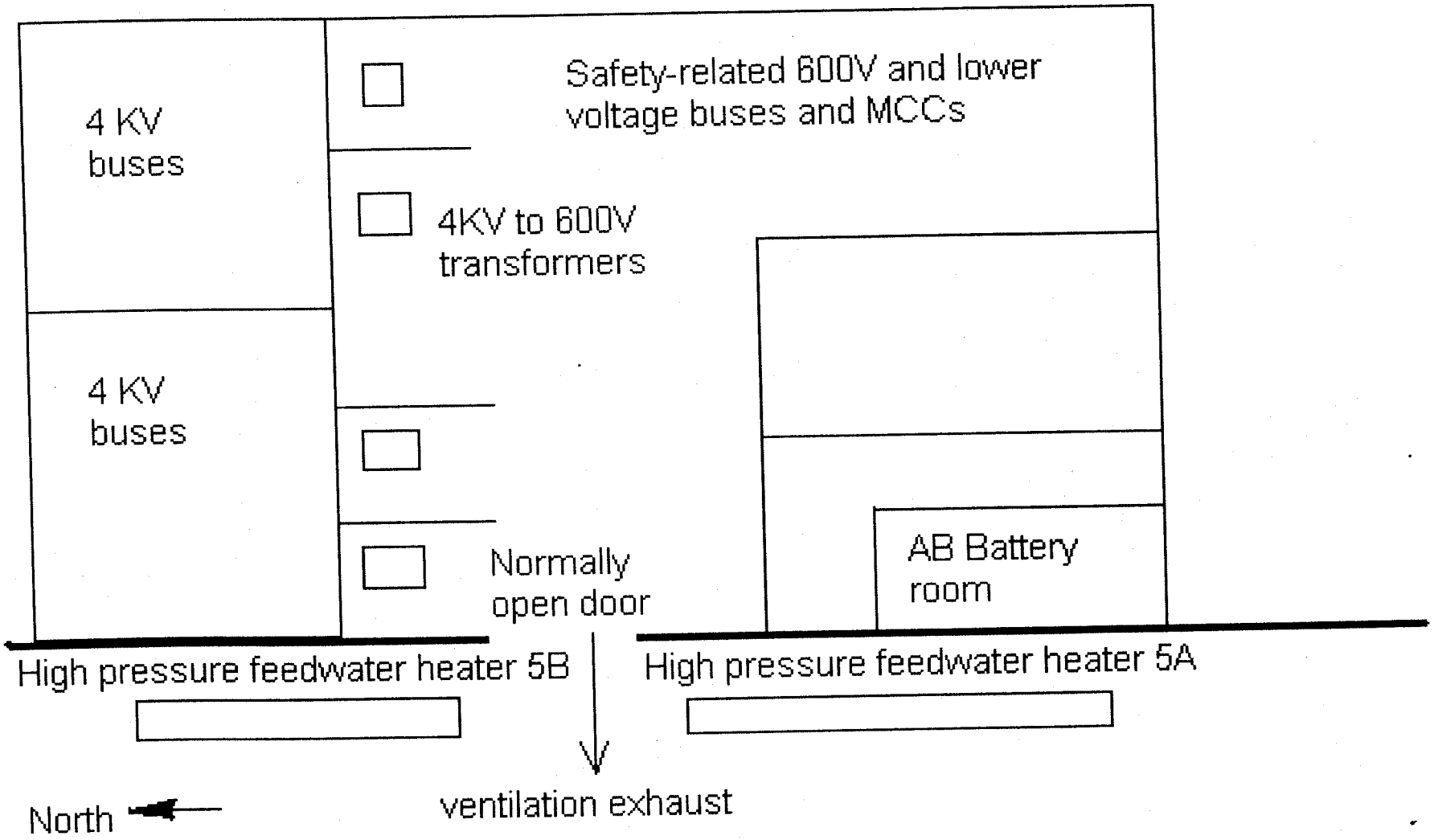

Unit 1 Turbine Building (EL: 609'-0")

Figure 3: Simplified switchgear room layout

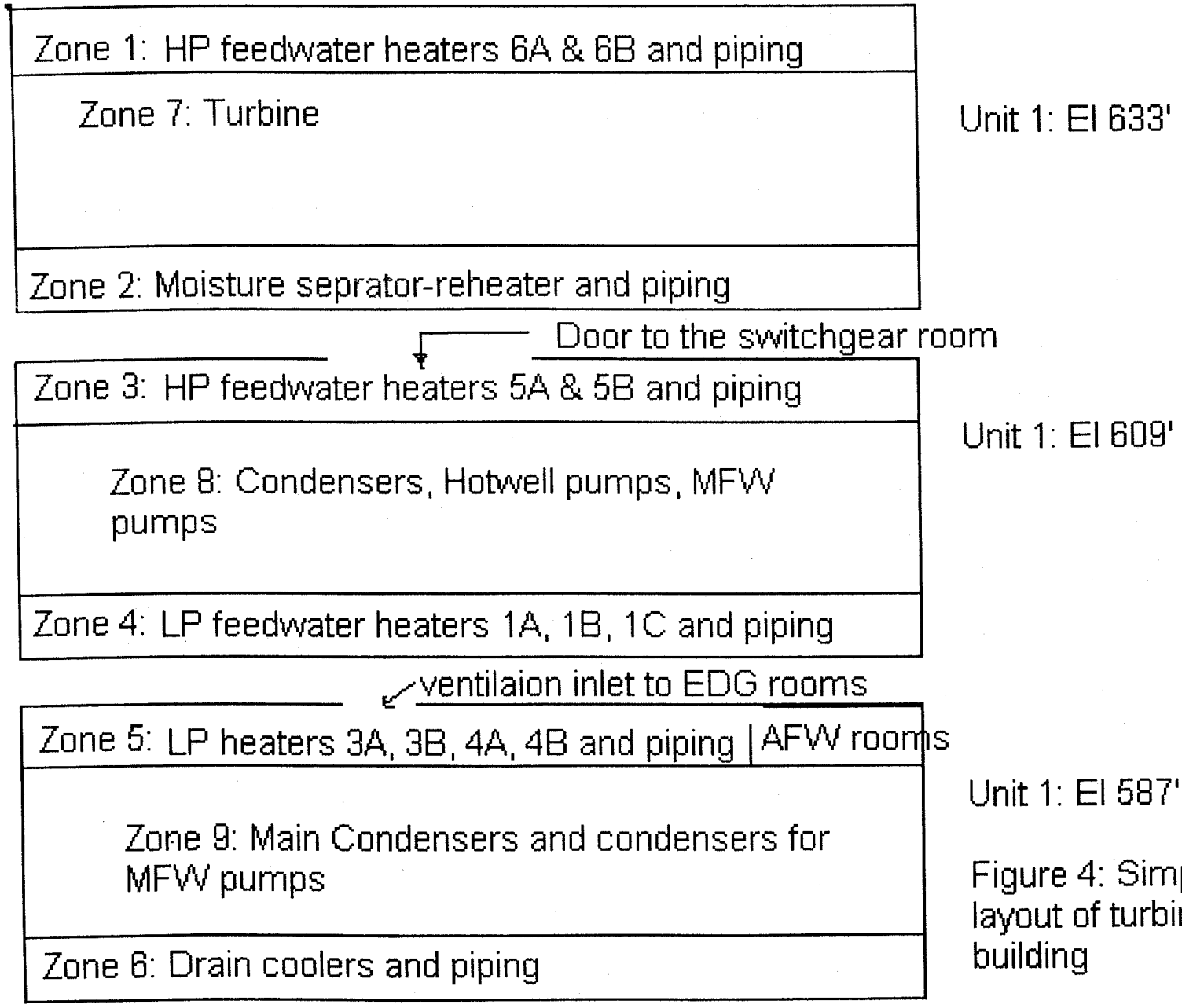

Figure 4: Simplified layout of turbine building