EDO Principal Correspondence Control

FROM: DUE: 06/08/00

EDO CONTROL: G20000232
DOC DT: 05/03/00
FINAL REPLY:

David Lochbaum
Union of Concerned Scientists

TO:

Travers, EDO

FOR SIGNATURE OF : ** GRN ** CRC NO:

Collins, NRR

DESC:

2.206 -- Hatch Nuclear Plant Petition - Request for Generic Communication on Degradation of Liquid and Gaseous Radwaste Systems; and Petition for Rulemaking for Aging Management of Liquid and Gaseous Radwaste Systems

DATE: 05/04/00

ASSIGNED TO: CONTACT:

NRR Collins

SPECIAL INSTRUCTIONS OR REMARKS:

ROUTING:

Travers
Paperiello
Miraglia
Norry
Blaha
Burns
Springer, ADM
Cyr, OGC
Goldberg, OGC
Subbarathnam,NRR

TEMPLATE: EDO-001

E-RIDS: EDO-01

UNION OF
CONCERNED
SCIENTISTS

May 3, 2000

Dr. William J. Travers
Executive Director for Operations
Nuclear Regulatory Commission
Washington, DC 20555-0001

SUBJECT: HATCH NUCLEAR PLANT PETITION PURSUANT TO 10 CFR 2.206; REQUEST FOR GENERIC COMMUNICATION ON DEGRADATION OF LIQUID AND GASEOUS RADWASTE SYSTEMS; AND PETITION FOR RULEMAKING FOR AGING MANAGEMENT OF LIQUID AND GASEOUS RADWASTE SYSTEMS

Dear Dr. Travers:

During a review of the license renewal application submitted by the owner of the Hatch Nuclear Plant, the Union of Concerned Scientists identified a number of apparent deficiencies in the aging management programs described for the liquid and gaseous radwaste systems. We originally intended to file a motion to intervene in the license renewal proceeding. However, further evaluation of our concerns indicated that the apparent deficiencies involve non-conformance with the existing design and licensing bases for the facility. Because license renewal at Hatch exacerbates rather than introduces these non-conformances, we determined that the more appropriate vehicle for UCS to raise these concerns with the NRC staff is via the 10 CFR 2.206 process. In the attached petition, we have documented two contentions. We are petitioning the NRC staff to issue a Demand for Information to the Hatch owner for answers to questions related to these contentions.

As the apparent deficiencies may apply to other operating nuclear power plants, we are additionally requesting that the NRC staff issue a generic communication to all plant owners about the potential problems.

Finally, we are requesting that the NRC staff initiate a rulemaking change to remedy a shortcoming with the license renewal rule.

Sincerely,

David Lochbaum
Nuclear Safety Engineer

Attachment: 2.206 Petition, Request for Generic Communication, and Petition for Rulemaking

Washington Office: 1616 P Street NW Suite 310 • Washington DC 20036-1495 • 202-332-0900 • FAX: 202-332-0905
Cambridge Headquarters: Two Brattle Square • Cambridge MA 02238-9105 • 617-547-5552 • FAX: 617-864-9405
California Office: 2397 Shattuck Avenue Suite 203 • Berkeley CA 94704-1567 • 510-843-1872 • FAX: 510-843-3785

Contention No. 1: The Hatch Nuclear Plant is being operated outside its design and licensing bases because the material condition of piping, tanks and other components of the liquid radwaste system are not being properly inspected and maintained.

Federal regulations require the liquid radwaste system at the Hatch Nuclear Plant to be designed, installed, operated, and maintained in accordance with the following standards:

> The nuclear power unit design shall include means to control suitably the release of radioactive materials in gaseous and liquid effluents and to handle radioactive solid wastes produced during normal reactor operation, including anticipated operational occurrences. Sufficient holdup capacity shall be provided for retention of gaseous and liquid effluents containing radioactive materials, particularly where unfavorable site environmental conditions can be expected to impose unusual operational limitations upon the release of such effluents to the environment.[1]
>
> Structures, systems, and components important to safety shall be designed to accommodate the effects of and to be compatible with the environmental conditions associated with normal operation, maintenance, testing, and postulated accidents, including loss-of-coolant accidents.[2]

The petitioner has three specific concerns that the liquid radwaste systems at Plant Hatch do not conform to these licensing requirements and the plant's design bases:

- susceptibility of liquid radwaste system piping to degradation,
- susceptibility of liquid radwaste system tanks and vessels to degradation, and
- degraded capability of valves that isolate liquid radwaste discharge.

These concerns are detailed in the following sections.

Susceptibility of Liquid Radwaste System Piping to Degradation

The piping of the liquid radwaste systems at Hatch are designed to the standards of American National Standards Institute (ANSI) B31.1.0 - 1967.[3]

In its application for license renewal, the owner of the Hatch Nuclear Plant described a Flow Accelerated Corrosion Program, Treated Water Systems Piping Inspections, and an evaluation program for buried or embedded piping. The submittal stated that these programs monitor piping for degradation:

> The Flow Accelerated Corrosion (FAC) Program is a condition monitoring program designed to monitor pipe wear in those systems that have been determined to be susceptible to FAC-related loss of material.[4]

---

[1] 10 CFR 50 Appendix A, General Design Criteria for Nuclear Power Plants, Criterion 60, Control of releases of radioactive materials to the environment.

[2] 10 CFR 50 Appendix A, General Design Criteria for Nuclear Power Plants, Criterion 4, Environmental and dynamic effects design bases.

[3] Hatch Unit 1 Updated Final Safety Analysis Report, Table 9.2-1, "Design Code for Major Liquid Radwaste System Components."

[4] H. L. Sumner Jr., Vice President - Hatch Project Support, Southern Nuclear Operating Company, Inc., to Nuclear Regulatory Commission, "Edwin I. Hatch Nuclear Plant Application for Renewed Operating Licenses," February 29,

> The plant Treated Water Systems Piping Inspections will provide for condition monitoring via one time examinations intended to provide objective evidence that existing Chemistry Control is managing aging in piping that is not examined under another inspection program.
>
> Treated Water Systems Piping Inspections will examine a sample population of carbon and stainless steel tubing and piping in the treated water systems. The results of the sample population examinations will be recorded and evaluated, and subsequent examinations will be conducted where evaluation results warrant. If significant degradation is noted, the sample set may be expanded.
>
> Inspections will be conducted using techniques appropriate for piping examinations and trending. This may include, but not be limited to, volumetric or destructive examination. The specific sample population, examination methods and acceptance criteria will be defined in the inspection and trending procedures.[5]
>
> The buried or embedded environment includes components buried beneath the surface of the ground (in come cases with controlled backfills) or embedded in structural concrete.
>
> The materials of construction having a buried or embedded environment include carbon steel, stainless steel, cast iron, and copper.
>
> Underground carbon steel piping is covered with a protective coating that is expected to greatly reduce the rate of corrosion occurring on the external surfaces of buried piping.[6]

Hatch's owner reported "many deficiencies" with the protective coatings applied to buried piping at the plant:

> A review of the condition reporting database mentioned in section 3.0 showed that many deficiencies were written that related to component exteriors for buried piping segments. Failures of buried components due to corrosion in areas where gaps in the existing coating have occurred during the life of the plant. No failures have been identified where the coating had been properly installed. However, there is some concern over the continued viability of the coating over the extended life of the plant.[7]

2000, Section A.2.2, "Flow Accelerated Corrosion Program."

[5] H. L. Sumner Jr., Vice President - Hatch Project Support, Southern Nuclear Operating Company, Inc., to Nuclear Regulatory Commission, "Edwin I. Hatch Nuclear Plant Application for Renewed Operating Licenses," February 29, 2000, Section A.3.2, "Treated Water Systems Piping Inspections."

[6] H. L. Sumner Jr., Vice President - Hatch Project Support, Southern Nuclear Operating Company, Inc., to Nuclear Regulatory Commission, "Edwin I. Hatch Nuclear Plant Application for Renewed Operating Licenses," February 29, 2000, Section C.1.2.10, "Buried or Embedded."

[7] H. L. Sumner Jr., Vice President - Hatch Project Support, Southern Nuclear Operating Company, Inc., to Nuclear Regulatory Commission, "Edwin I. Hatch Nuclear Plant Application for Renewed Operating Licenses," February 29, 2000, Section C.2.4.3, "Aging Management Review for Commodity External Surfaces exposed to a Buried or Embedded Environment."

Hatch's owner also reported that portions of the liquid radwaste system piping were found to be improperly installed:

> While performing concrete expansion anchor surveillance evaluation, it was determined that the radwaste sump discharge piping between the drywell penetrations and the second isolation valves is not supported per seismic Class I requirements. ... After reviewing the piping supports as presently installed, it as been determined that this piping was not adequately installed for the postulated seismic event.[8]

Hatch's owner specifically excluded the liquid radwaste system from the scope of its aging management programs for piping.[9]

The stainless steel piping of the condensate storage and transfer system which is exposed to demineralized water is within the scope of the aforementioned aging management programs for its pressure boundary function. The aging effects include loss of material and cracking.[10]

Hatch's owner has reported significant degradation of piping in the plant service water (PSW) and residual heat removal service water (RHRSW) systems:

> HT-96676 Rev. 0: "This change allows the replacement of carbon steel small bore piping with stainless steel in the PSW and RHRSW systems to reduce the rate of microbiologically influenced corrosion."[11]

The liquid radwaste system piping at the Hatch Nuclear Plant is designed to an equal or lower quality standard than the piping of the condensate storage and transfer, plant service water, and residual heat removal service water systems. The liquid radwaste system piping is exposed to water of equal or lower chemistry quality than the water of these systems. The liquid radwaste system piping is therefore at least as vulnerable to degradation mechanisms such as flow-accelerated corrosion and microbiologically influenced corrosion as the piping of these systems. But the liquid radwaste system piping is not covered by the Flow Accelerated Corrosion program, the Treated Service Water Inspection program, or the buried or embedded environment program. Nor is the liquid radwaste system piping covered by the plant's Inservice Inspection program. Consequently, it is reasonable to expect that the liquid radwaste system piping is degraded to an unknown extent.

---

[8] M. Manry, Georgia Power Company, Telegram to James P. O'Reilly, Nuclear Regulatory Commission, "Hatch Unit 1, Docket No. 50-321, Notification of Reportable Occurrence No. 50-321/1979-43," June 29, 1979.

[9] H. L. Sumner Jr., Vice President - Hatch Project Support, Southern Nuclear Operating Company, Inc., to Nuclear Regulatory Commission, "Edwin I. Hatch Nuclear Plant Application for Renewed Operating Licenses," February 29, 2000, Table 2.2-1, Plant Hatch System/Structure Function Scoping Results.

[10] H. L. Sumner Jr., Vice President - Hatch Project Support, Southern Nuclear Operating Company, Inc., to Nuclear Regulatory Commission, "Edwin I. Hatch Nuclear Plant Application for Renewed Operating Licenses," February 29, 2000, Table 3.2.4-5, "Aging Effects Requiring Management for Components Supporting Condensate Transfer and Storage System Intended Functions and Their Component Functions."

[11] H. L. Sumner Jr., Vice President - Hatch Project Support, Southern Nuclear Operating Company, Inc., to Nuclear Regulatory Commission, "Edwin I. Hatch Nuclear Plant Annual Operating Report for 1999," February 22, 2000.

The consequences from a liquid radwaste system pipe failure can be significant because the system processes water that can contain harmful amounts of radioactivity. A liquid radwaste system pipe break inside one of the plant's buildings could result in significant radiation exposure to plant workers. The break of the piping from the sample tanks to the discharge line could result in radioactive water escaping into the ground without the prescribed dilution afforded by the Altamaha River. The resulting concentration of radioactivity could cause excessive radiation exposure to members of the public.

General Design Criterion 4 to Appendix A of 10 CFR Part 50 requires the liquid radwaste system to be designed for environmental conditions encountered during normal operation. The liquid radwaste system piping is vulnerable to the degradation mechanisms that have already affected higher quality piping at Plant Hatch. Yet the liquid radwaste system piping is not covered within the plant's aging management programs. Therefore, it appears the plant is not in compliance with this licensing requirement.

Requested Demand for Information: The petitioner requests the NRC to ask the owner of the Hatch Nuclear Plant the following questions via a Demand for Information:

1. What assurance exists that the external surfaces of buried and embedded piping of the liquid radwaste system are not degraded?

2. What assurance exists that the internal surfaces of liquid radwaste system piping are not degraded by pitting, corrosion, and other degradation mechanisms?

3. Could a break in the liquid radwaste system piping from the sample tanks to the discharge line be detected? If so, how small a break could be detected (i.e., how much radioactive liquid could be diverted into the ground without being detected)?

4. To what extent does the preventative maintenance program at Plant Hatch cover the liquid radwaste system piping?

5. To what extent is the liquid radwaste system piping covered by programs which monitor degradation (e.g., erosion/corrosion, flow accelerated corrosion, microbiologically influenced corrosion, protective coatings for embedded/buried piping, etc.)?

Susceptibility of Liquid Radwaste System Tanks and Vessels to Degradation

The liquid radwaste systems at the Hatch Nuclear Plant consist of numerous tanks and vessels:

The waste collector tank and the waste surge tank are constructed of carbon steel and were designed to the requirements of ASME Code, Section III, Class 3.

The floor drain collector tank and the sample tank are constructed of carbon steel and were designed to meet the requirements of ASME Code, Section III, Class 3.

In keeping with the design objectives, the chemical waste tank is constructed of stainless steel and was designed to meet the requirements of AMSE Code, Section III, Class 3.

The spent resin tank is constructed of carbon steel and was designed to meet the requirements of ASME Code, Section III, Class 3.

> The chemical waste and floor drain neutralizer tank is constructed of stainless steel and was designed to meet the requirements of ASME Code, Section III, Class 3.[12]
>
> The filter vessels are constructed of carbon steel and were designed to meet the requirements of ASME Code, Section III, Class 3.
>
> A corrosion-resistant lining is provided to prevent erosion of the carbon steel vessels.[13]
>
> The demineralizer vessels are constructed of carbon steel, were designed to meet the requirements of ASME Code, Section III, Class 3, and are equipped with a rubber lining. ... Fine mesh strainers are provided in the demineralizer vessel discharge and in the piping downstream to prevent resin fines from being transferred to other portions of the system.[14]

UCS reviewed the UFSARs for Hatch Units 1 and 2, the Inservice Inspection Program report for Hatch, and the application for license renewal submitted by Hatch's owner. These reviews did not identify any periodic inspections of the tanks and vessels of the liquid radwaste systems. Hatch's owner committed to examine the condensate storage tanks (aluminum for Unit 1 and stainless steel for Unit 2) prior to entering the license renewal term:

> The plant Condensate Storage Tank (CST) Inspections will provide for condition monitoring via one time inspections intended to provide objective evidence that the aging effects predicted for the CST internal environments are adequately managed by programs credited for the renewal term.
>
> Internal surfaces of each CST will be examined to verify that age-related degradation is not occurring. The examination will focus on the standpipes and the connections between aluminum standpipes and galvanized steel flanges, since these locations would be the most susceptible to corrosion.
>
> There will be a one-time inspection of each CST.[15]

Hatch's owner reported that these tanks of the condensate storage and transfer system would be inspected because they are susceptible to aging degradation:

> Stainless steel and galvanized steel tanks of the condensate storage and transfer system are exposed to demineralized water have a pressure boundary function. The aging effects include loss of material.[16]

---

[12] Hatch Unit 2 Updated Final Safety Analysis Report, Section 11.2.2.2.2, "Tanks."

[13] Hatch Unit 2 Updated Final Safety Analysis Report, Section 11.2.2.2.3, "Filters."

[14] Hatch Unit 2 Updated Final Safety Analysis Report, Section 11.2.2.2.4, "Demineralizers."

[15] H. L. Sumner Jr., Vice President - Hatch Project Support, Southern Nuclear Operating Company, Inc., to Nuclear Regulatory Commission, "Edwin I. Hatch Nuclear Plant Application for Renewed Operating Licenses," February 29, 2000, Section A.3.4, "Condensate Storage Tank Inspection."

[16] H. L. Sumner Jr., Vice President - Hatch Project Support, Southern Nuclear Operating Company, Inc., to Nuclear Regulatory Commission, "Edwin I. Hatch Nuclear Plant Application for Renewed Operating Licenses," February 29, 2000, Table 3.2.4-5, "Aging Effects Requiring Management for Components Supporting Condensate Transfer and Storage System Intended Functions and Their Component Functions."

In the license renewal application, Hatch's owner described a program for protecting tanks and vessels from their potentially corrosive contents:

> The Protective Coatings Program provides a means of preventing or minimizing aging effects that would otherwise result from contact of the base metal with the associated environment. It is a mitigation and condition monitoring program designed to provide base metal aging management through application, maintenance and inspection of protective coatings on selected components and structures.[17]
>
> Protective coatings surveillance is normally performed once per operating cycle for Service Level I components. Other component surveillance is performed as determined by the protective coatings specialist, based upon trends and plant specific operating experience.[18]
>
> The Protective Coatings Program will be expanded to include the external surfaces of carbon steel commodities in-scope for License Renewal that are exposed to inside, outside, submerged, and buried environments as made accessible.
>
> Affected systems will include, but may not be limited to, the nuclear boiler, standby liquid control, residual heat removal, residual heat removal service water, core spray, high pressure coolant injection and reactor core isolation cooling. Certain portions of the post-accident radioactive decay holdup, plant service water, instrument air, drywell chilled water, drywell pneumatics, standby gas treatment, nitrogen inerting, fire protection, diesel fuel oil, piping supports, raceway supports, and building structural steel will also be included. The affected components in these systems will be piping, valves, pumps, bolts, tanks, and structural steel components.
>
> The Protective Coatings Program will be revised to require periodic inspections of in-scope components to ensure that they are properly coated and free of significant age-related degradation. Coated surfaces of certain components, including those normally inaccessible but made accessible due to maintenance or other activities, will also be inspected when they become accessible.[19]

According to the license renewal application, the Protective Coatings Program does not apply to the tanks and vessels of the liquid radwaste system. Yet they are at least as vulnerable to the deleterious effects as tanks that are within the scope of this aging management program.

---

[17] H. L. Sumner Jr., Vice President - Hatch Project Support, Southern Nuclear Operating Company, Inc., to Nuclear Regulatory Commission, "Edwin I. Hatch Nuclear Plant Application for Renewed Operating Licenses," February 29, 2000, Section A.2.3, "Protective Coatings Program."

[18] H. L. Sumner Jr., Vice President - Hatch Project Support, Southern Nuclear Operating Company, Inc., to Nuclear Regulatory Commission, "Edwin I. Hatch Nuclear Plant Application for Renewed Operating Licenses," February 29, 2000, Section A.2.3.2, "Sample Size and Frequency [of Protection Coatings Program]."

[19] H. L. Sumner Jr., Vice President - Hatch Project Support, Southern Nuclear Operating Company, Inc., to Nuclear Regulatory Commission, "Edwin I. Hatch Nuclear Plant Application for Renewed Operating Licenses," February 29, 2000, Section A.2.3.5, "Enhancements [for the Protective Coatings Program]."

Hatch's owner reported reviewing NRC generic communications regarding aging,[20] but not those involving degradation of liquid radwaste tanks and components. UCS reviewed the NRC generic communications and identified the following two examples of the NRC alerting plant owners to degradation of liquid radwaste tanks and components:

> In November 1977, a radwaste tank ruptured at the Millstone Nuclear Power Station. ... Corrosion had weakened the capability of the radwaste tank to withstand pressure. .. This tank had a history of corrosion problems such that the corrosion probably caused some weakness which contributed to the rupture. The tank was constructed of type 304 stainless steel. ... Since radwaste tanks of this type are used at most power reactors, the potential may exist for similar events at other power reactors. Also, such events can be avoided by proper procedures and periodic examination if personnel are aware of the problem. ... Prevention of such events will minimize the possibility of personnel injury, in-plant contamination, releases of radioactivity, and occupational radiation exposure resulting from the repair and clean-up operations.[21]
>
> During a routine NRC inspection at Millstone, inspectors found that the Unit 1 radwaste facility equipment was significantly degraded, especially vessels and piping in the facility. In general, a lack of continuing and preventative maintenance appeared to have allowed several systems and components to significantly degrade, in some instances creating unnecessary adverse radiological conditions. Piping located in the mezzanine areas above the "C" and "D" floor drain collector tanks were notably rusted, with a dusting of flaked-off paint and rust deposited across all horizontal surfaces in this area. ... A video taken in November 1994 during the last manned entry into the filter sludge tank room indicated that a crack in the filter sludge tank led to the dispersal of highly radioactive spent filter sludge throughout the tank room. Discussions with licensee staff members indicated that a similar condition exists in the spent resin tank room, which in this case is caused by the overfill of the spent resin tank.[22]

It is evident from this NRC generic correspondence that degradation of liquid radwaste tanks has actually occurred at a US nuclear power plant. It is not evident from the Hatch license renewal application or the Hatch UFSARs that degradation of liquid radwaste system tanks and vessels is monitored. Yet the postulated failure of the liquid radwaste tanks is explicitly within the design and licensing bases for the Hatch Nuclear Plant:

> Although not analyzed for the requirements of Seismic Category I equipment, the liquid radwaste tanks are constructed in accordance with sound engineering principles and current ASME codes. Therefore, simultaneous failure of all tanks is not considered credible, though conservatively analyzed herein. ... The only event which might cause failure of all radwaste tanks is an earthquake sufficient in magnitude to exceed the design capabilities.[23]

---

[20] H. L. Sumner Jr., Vice President - Hatch Project Support, Southern Nuclear Operating Company, Inc., to Nuclear Regulatory Commission, "Edwin I. Hatch Nuclear Plant Application for Renewed Operating Licenses," February 29, 2000, Table C.1.5-1, "Generic Communications Reviewed as Part of the Systematic Evaluation to Determine Aging Effects Requiring Management."

[21] Nuclear Regulatory Commission, Information Notice 79-07, "Rupture of Radwaste Tanks," March 23, 1979.

[22] Nuclear Regulatory Commission, Information Notice 96-14, "Degradation of Radwaste Facility Equipment at Millstone Nuclear Power Station, Unit 1," March 1, 1996.

[23] Hatch Unit 2 Updated Final Safety Analysis Report, Section 11.2.4.2.1, "Identification of Causes and Accident Description."

> An event which causes the simultaneous rupture of the liquid radwaste tanks is highly improbable. .. The only event which might cause failure of all the radwaste tanks is an earthquake sufficient in magnitude to exceed the design capabilities.[24]

Hatch's owner reported that the only event causing failure of multiple radwaste tanks is an earthquake. Perhaps, but the undetected corrosion of the tanks can weaken them, thus lowering the magnitude of the earthquake needed to cause failures. Undetected degradation of liquid radwaste system tanks and vessels can therefore increase the probability of occurrence of this design bases event.

In addition, the consequences from this design bases event may be increased:

> The concrete radwaste building retains and returns any spills or leaks from the liquid radwaste system to the system for additional processing. The radwaste building has the capacity to handle a major leak in the largest tank without permitting significant quantities of the liquid to escape offsite.[25]

If undetected degradation causes multiple liquid radwaste system tanks and vessels to develop leaks, the combined leakage may exceed that from a major leak in the largest tank. Consequently, significant quantities of the liquid (which can be assumed to contain radioactivity) may escape offsite. The Hatch Nuclear Plant has already experienced the accidental release of significant quantities of radioactive liquid:

> Technical analyses determined that approximately 141,500 gallons of water leaked from the spent fuel pool during the period in which the transfer canal seal was deflated. Approximately 17,000 gallons were recovered in the Unit I and II sumps, leaving some 124,5000 unaccounted for. ... Some of the water eventually entered at least one site storm drain which drained to a swampy area to the northeast of the plant site behind the cooling towers. ... Measurements in the swamp indicate that only 13% of the released activity entered the swamp, and approximately 7% of the activity reached the creekbed.[26]

The potential consequences from leakage of multiple liquid radwaste system tanks and vessels may be significant. The capacity of the system's tanks range from 1,200 to 65,000 gallons. The radioactivity content of the system's tanks can range from 110 to 27 million microcuries.[27]

Requested Demand for Information: The petitioner requests the NRC to ask the owner of the Hatch Nuclear Plant the following questions via a Demand for Information:

1. What assurance exists that the tanks and vessels of the liquid radwaste system are not degraded?

---

[24] Hatch Unit 2 Updated Final Safety Analysis Report, 15.1.34.3, "Accident Description [for Liquid Radwaste Tank Rupture]."

[25] Hatch Unit 2 Updated Final Safety Analysis Report, Section 11.2.4.2.2, "Analysis of Effects and Consequences."

[26] James C. Hardeman, Environmental Radiation Coordinator, Georgia Department of Natural Resources, "Loss of Spent Fuel Pool Water at the Edwin I. Hatch Nuclear Plant," December 19, 1986.

[27] Hatch Unit 2 Updated Final Safety Analysis Report, Table 11.2-2, "Capacity and Maximum Activity Contained in Liquid Radwaste Tanks."

2. To what extent are the tanks and vessels of the liquid radwaste system covered in the preventative maintenance program at Plant Hatch?

3. To what extent are the tanks and vessels of the liquid radwaste system covered by programs, which monitor degradation?

Degraded Capability of Valves That Isolate Liquid Radwaste Discharge

While much of the water processed by the liquid radwaste system is recycled for use by the plant, Hatch routinely releases radioactive water to the environment:

> The liquid radwaste system is designed to process and recycle the liquid waste collected in the waste holdup tank to the extent practicable. Liquid waste collected in chemical or floor drain tanks is normally discharged to the environment after treatment and dilution. During normal plant operations, the annual radiation doses to individuals from each reactor on the site, resulting from these routine liquid waste discharges, are within the 10 CFR 5, Appendix I, design objectives.[28]
>
> Process and discharge streams shall be appropriately monitored and such features shall be incorporated, as necessary, to maintain releases below the permissible limits specified in the Technical Specifications.[29]
>
> The liquid and gaseous effluents from the treatment systems are continuously monitored, and the discharges are terminated if the effluents exceed preset radioactivity levels.[30]
>
> Prior to the release of any tank containing liquid radwaste, following the required recirculations, samples are collected and analyzed in accordance with the Edwin I. Hatch Nuclear Plant Offsite Dose Calculation Manual (ODCM) Table 2-3. A sample from each tank planned for release is analyzed for principal gamma emitters, I-131, and dissolved and entrained noble gases, by gamma spectroscopy. Monthly and quarterly composites are prepared for analysis by extracting aliquots from each sample tank from the tanks released.
>
> The radionuclide concentrations determined by gamma spectroscopic analysis of samples taken from tanks planned for release, in addition to the most current sample analysis results available for tritium, gross alpha, Sr-89, Sr-90 and Fe-55, are used along with the corresponding ECL [effluent concentration limit] valves to determine the ECL fraction for these tanks. This ECL fraction is then used, with the appropriate safety factors, tolerance factors, and the expected dilution stream flow to calculate maximum permissible release rate and a liquid effluent monitor setpoint. The monitor setpoint is calculated to assure that the limits of the ODCM are not exceeded.
>
> A monitor reading in excess of the calculated setpoint will result in an automatic termination of the liquid radwaste discharge. Liquid effluent discharge is also automatically terminated if the dilution

---

[28] Hatch Unit 1 Updated Final Safety Analysis Report, Section 9.1, "Summary Description [for the Radioactive Waste Systems]."

[29] Hatch Unit 1 Updated Final Safety Analysis Report, Section 1.5.5 Radioactive Waste Disposal Criteria

[30] Hatch Unit 1 Updated Final Safety Analysis Report, Section 9.1, "Summary Description [for the Radioactive Waste Systems]."

> stream flow rate falls below the minimum assured dilution flow rate used in the setpoint calculations and established as a setpoint on the dilution stream flow monitor.[31]
>
> Liquid effluents are continuously monitored and discharges are terminated if the effluents exceed preset radioactivity levels.[32]
>
> Liquid effluents are discharged through a 3-in. diameter line which feeds into a 42-in. diameter pipe which has an average flowrate of 26.8 ft^3/s.[33]
>
> Offsite discharge is under operator control. Two console-operated parallel flow-control valves control flow at fast and slow rates. Console-operated, fail-closed shutoff valves are provided in the sample tank effluent line and in the discharge line to the conduit to the river. Activity in the discharge line from the sample tank above a preset level will initiate automatic isolation of the discharge line. Discharge to the conduit is prevented if there is not sufficient dilution water flow available from the cooling tower.[34]

The Updated Final Safety Analysis Report (UFSAR) for the Hatch Nuclear Plant assumed that these console-operated, fail-closed shutoff valves terminate the improper release of radioactive liquid to the Altamaha River. However, the UFSAR did not specify any stroke-time testing or leak-rate testing that verifies the isolation function will be performed. In fact, the UFSAR stated:

> The liquid radwaste system is normally operated on an as-required basis during operation of the nuclear plant, thereby demonstrating operability without any special inspections or testing. Data from equipment operation logs, records, and from laboratory testing of samples taken from the radwaste sampling tanks reflects day-to-day performance of the various radwaste subsystems. Abnormal conditions such as high-volume throughputs, short-filter or demineralizer runs, and high-effluent conductivity or activity, dictate special performance testing or analysis that my be required.[35]

The Inservice Inspection (ISI) program at Hatch frequently finds and corrects valve problems such as the following examples from a recently submitted ISI report:[36]

> Internals of valve are worn beyond repair. Replace valve with new like kind valve MPL 1P41-

---

[31] H. L. Sumner Jr., Vice President - Hatch Project Support, Southern Nuclear Operating Company, Inc., to Nuclear Regulatory Commission, "Edwin I. Hatch Nuclear Plant Annual Radioactive Effluent Release Report," December 31, 1998, Section 1.3, "Measurements and Approximations of Total Radioactivity."

[32] Hatch Unit 2 Updated Final Safety Analysis Report, Section 11.2, "Liquid Radwaste System."

[33] Hatch Unit 2 Updated Final Safety Analysis Report, Section 11.2.4.1.2, "Release Points."

[34] Hatch Unit 2 Updated Final Safety Analysis Report, Section 11.2.3.4, "Control of Discharge to the Environment."

[35] Hatch Unit 2 Updated Final Safety Analysis Report, Section 11.2.5, "Tests and Inspections."

[36] H. L. Sumner Jr., Vice President - Hatch Project Support, Southern Nuclear Operating Company Inc., to Nuclear Regulatory Commission, "Edwin I. Hatch Nuclear Plant - Unit 1 Third 10-Year Interval Inservice Inspection Program Owner's Activity Report," January 21, 2000, Table 3, "Unit 1, 1R16 Outage Abstract of Repairs, Replacements, or Corrective Measures Required for Continued Service."

F208D

Replace drain valves 1B31-F051A, F052A, they are leaking by the seat. Code case N-416-1 is used. MPL 1B31-F052A

Small crack in weld to pipe connection found for valve 1D11-F129. Weld will be removed and replaced by a 2 to 1 fillet weld that is resistant to the fatigue.

The license renewal application submitted by Hatch's owner acknowledged the reality of component aging:

> The detrimental effects of aging are assumed to be continuous and incremental. Thus, the detrimental effects of aging may increase as service life is extended, assuming no replacement of components.[37]

Yet even though valves purchased to higher quality standards in safety-related systems at Plant Hatch have repeatedly demonstrated detrimental effects of aging, Hatch's owner specifically excluded the liquid radwaste system's valves from the scope of its aging management program[38] and from its ISI program.[39]

The valves that must close to terminate the improper flow of radioactive liquid to the Altamaha River are not within the scope of the ISI program at Hatch and are not within the scope of any aging management program described in the Hatch license renewal application. Therefore, it is uncertain how there can be reasonable assurance that these valves will close when required to protect public health and the environment from improper releases of radioactive liquid as required by the facility's current design and licensing bases. Of course, that uncertainty carries over into the license renewal term.

Requested Demand for Information: The petitioner requests the NRC to ask the owner of the Hatch Nuclear Plant the following questions via a Demand for Information:

1. What assurance exists that the liquid radwaste system valves and associated control circuits will close to terminate the release of radioactive water?

2. What is the scope, frequency, and acceptance criteria for all testing, including preventative maintenance tasks, of the valves and control circuits that must automatically close to terminate releases from the Hatch Unit 1 and Unit 2 liquid radwaste systems to the river?

3. What has been the maintenance history for the valves and control circuits that must automatically close to terminate releases from the Hatch Unit 1 and Unit 2 liquid radwaste systems to the river?

---

[37] H. L. Sumner Jr., Vice President - Hatch Project Support, Southern Nuclear Operating Company, Inc., to Nuclear Regulatory Commission, "Edwin I. Hatch Nuclear Plant Application for Renewed Operating Licenses," February 29, 2000, Section 2.1.3.4, Components Subject to Periodic Replacement at a Set Frequency or Qualified Life.

[38] H. L. Sumner Jr., Vice President - Hatch Project Support, Southern Nuclear Operating Company, Inc., to Nuclear Regulatory Commission, "Edwin I. Hatch Nuclear Plant Application for Renewed Operating Licenses," February 29, 2000, Table 2.2-1, Plant Hatch System/Structure Function Scoping Results.

[39] H. L. Sumner Jr., Vice President - Hatch Project Support, Southern Nuclear Operating Company Inc., to Nuclear Regulatory Commission, "Edwin I. Hatch Nuclear Plant - Unit 1 Third 10-Year Interval Inservice Inspection Program Owner's Activity Report," January 21, 2000, Table 3, "Unit 1, 1R16 Outage Abstract of Repairs, Replacements, or Corrective Measures Required for Continued Service."

Contention No. 2: The Hatch Nuclear Plant is being operated outside its design and licensing bases because the material condition of piping and components of the gaseous radwaste system are not being properly inspected and maintained.

Federal regulations require the gaseous radwaste system at the Hatch Nuclear Plant to be designed, installed, operated, and maintained in accordance with the following standards:

> The nuclear power unit design shall include means to control suitably the release of radioactive materials in gaseous and liquid effluents and to handle radioactive solid wastes produced during normal reactor operation, including anticipated operational occurrences. Sufficient holdup capacity shall be provided for retention of gaseous and liquid effluents containing radioactive materials, particularly where unfavorable site environmental conditions can be expected to impose unusual operational limitations upon the release of such effluents to the environment.[40]
>
> Structures, systems, and components important to safety shall be designed to accommodate the effects of and to be compatible with the environmental conditions associated with normal operation, maintenance, testing, and postulated accidents, including loss-of-coolant accidents.[41]

The gaseous radwaste systems at Plant Hatch consists of steam jet air ejectors which extract steam and non-condensibles from the main condensers and offgas systems:

> The [steam jet] air ejector off-gas radioactive waste is treated by an ambient charcoal bed adsorption system before discharge to the environment. The annual dose at or beyond the site boundary due to gaseous effluents from each unit during normal operation does not exceed the 10 CFR 50 Appendix I design objectives.[42]
>
> Waste gas release at Plant Hatch is confined to four paths: main stack (also called the offgas vent), Unit 1 reactor building vent, Unit 2 reactor building vent, and the recombiner building vent. Each is equipped with an integrating-type sample collection device for collecting particulates and iodines.[43]

The petitioner has two specific concerns that the gaseous radwaste system does not conform to these licensing requirements and to the plant's design bases:

- susceptibility of gaseous radwaste system piping to degradation, and
- degraded capability of gaseous radwaste system to preclude hydrogen burns and detonations.

These concerns are detailed in the following sections.

---

[40] 10 CFR 50 Appendix A, General Design Criteria for Nuclear Power Plants, Criterion 60, Control of releases of radioactive materials to the environment.

[41] 10 CFR 50 Appendix A, General Design Criteria for Nuclear Power Plants, Criterion 4, Environmental and dynamic effects design bases.

[42] Hatch Unit 1 Updated Final Safety Analysis Report, Section 9.1, "Summary Description [for the Radioactive Waste Systems]."

[43] H. L. Sumner Jr., Vice President - Hatch Project Support, Southern Nuclear Operating Company, Inc., to Nuclear Regulatory Commission, "Edwin I. Hatch Nuclear Plant Annual Radioactive Effluent Release Report," December 31, 1998, Section 2.2, "Release Points of Gaseous Effluents."

Susceptibility of Gaseous Radwaste System Piping to Degradation

The offgas systems at Plant Hatch are not subjected to specific testing:

> The gaseous waste disposal systems are used on a routine basis and do not require specific testing to assure operability.[44]

Because the offgas systems are not within the scope of the Hatch license renewal program,[45] it is not within the scope of aging management programs such as the following:

> The buried or embedded environment includes components buried beneath the surface of the ground (in come cases with controlled backfills) or embedded in structural concrete.
>
> The materials of construction having a buried or embedded environment include carbon steel, stainless steel, cast iron, and copper.
>
> Underground carbon steel piping is covered with a protective coating that is expected to greatly reduce the rate of corrosion occurring on the external surfaces of buried piping.[46]

Some of the offgas system piping at Plant Hatch is buried underground while other system piping is coated and embedded in concrete:

Equipment Item:	146-min holdup line
Malfunction:	Corrosion of line
Consequences:	Leakage to soil of gaseous and liquid fission products
Design Precautions:	Outside of pipe dipped and wrapped[47]

> Carbon steel pipe embedded in concrete to be sand blasted and coated with one coat of red oxide primer 2-4 mils.[48]

Hatch's owner reported finding "many deficiencies" in the protective coatings applied to piping:

> A review of the condition reporting database mentioned in section 3.0 showed that many

[44] Hatch Unit 2 Updated Final Safety Analysis Report, Section 11.3.5, "Tests and Inspections."

[45] H. L. Sumner Jr., Vice President - Hatch Project Support, Southern Nuclear Operating Company, Inc., to Nuclear Regulatory Commission, "Edwin I. Hatch Nuclear Plant Application for Renewed Operating Licenses," February 29, 2000, Table 2.2-1, Plant Hatch System/Structure Function Scoping Results.

[46] H. L. Sumner Jr., Vice President - Hatch Project Support, Southern Nuclear Operating Company, Inc., to Nuclear Regulatory Commission, "Edwin I. Hatch Nuclear Plant Application for Renewed Operating Licenses," February 29, 2000, Section C.1.2.10, "Buried or Embedded."

[47] Hatch Unit 2 Updated Final Safety Analysis Report, Table 11.3-5, "Off-Gas System Equipment Malfunction Analysis."

[48] Southern Nuclear Operating Company, Inc., Note 21 to Drawing HL-26045 Rev. A., "Edwin I. Hatch Nuclear Plant Unit No. 2 Off Gas System P&ID," December 31, 1999.

> deficiencies were written that related to component exteriors for buried piping segments. Failures of buried components due to corrosion in areas where gaps in the existing coating have occurred during the life of the plant. No failures have been identified where the coating had been properly installed. However, there is some concern over the continued viability of the coating over the extended life of the plant.[49]

Unless the protective coatings applied to the buried and embedded piping of the offgas system are inspected, any installation deficiencies or subsequent viability challenges could result in aging degradation. Hatch's owner commented on aging degradation:

> The detrimental effects of aging are assumed to be continuous and incremental. Thus, the detrimental effects of aging may increase as service life is extended, assuming no replacement of components.[50]

The undetected degradation of offgas system piping can weaken the piping, undermine piping integrity, and increase the probability of an analyzed design bases event:

> The failure of the off-gas system is analyzed as event 15.1.35 in chapter 15. The related failure of the SJAE lines and the turbine gland-seal off-gas lines are analyzed as events 15.1.36 and 15.1.37, respectively in chapter 15.[51]
>
> This section provides the radiological analysis results for failure of the off-gas system.[52]

The undetected degradation of offgas system piping can also increase the consequences from an analyzed design bases event:

> The calculated exposure rate (at both the visitor center and U.S. Highway No. 1) is approximately 0.16 μR/h. For both iodine and noble gas releases, the calculated thyroid exposure is less than 10^{-3} μR/h for either location. Exposures due to off-gas to individuals in the vicinity of the power block are considered negligible.[53]

A break of the underground offgas piping running to the main stack (i.e., elevated release point) could cause the radiation exposures to individuals in the power block to increase above negligible.

---

[49] H. L. Sumner Jr., Vice President - Hatch Project Support, Southern Nuclear Operating Company, Inc., to Nuclear Regulatory Commission, "Edwin I. Hatch Nuclear Plant Application for Renewed Operating Licenses," February 29, 2000, Section C.2.4.3, "Aging Management Review for Commodity External Surfaces exposed to a Buried or Embedded Environment."

[50] H. L. Sumner Jr., Vice President - Hatch Project Support, Southern Nuclear Operating Company, Inc., to Nuclear Regulatory Commission, "Edwin I. Hatch Nuclear Plant Application for Renewed Operating Licenses," February 29, 2000, Section 2.1.3.4, Components Subject to Periodic Replacement at a Set Frequency or Qualified Life.

[51] Hatch Unit 2 Updated Final Safety Analysis Report, Section 11.3.4.2, "Accident Analysis."

[52] Hatch Unit 2 Updated Final Safety Analysis Report, Section 15.1.35, "Off-gas (RECHAR) System Failure (Radiological Consequences)."

[53] Hatch Unit 2 Updated Final Safety Analysis Report, Section 12.4.3.2, "Off-gas."

Requested Demand for Information: The petitioner requests the NRC to ask the owner of the Hatch Nuclear Plant the following questions via a Demand for Information:

1. What assurance exists that the external surfaces of buried and embedded piping of the gaseous radwaste system are not degraded?

2. Could a break in the offgas system piping running to the main stack be detected? If so, how small a break could be detected (i.e., how much radioactive gas could escape without being detected)?

3. To what extent does the preventative maintenance program at Plant Hatch cover the offgas system piping?

4. To what extent do programs that monitor degradation cover the offgas system piping?

Degraded Capability of Gaseous Radwaste System to Preclude Hydrogen Burns and Detonations

Steam jet air ejectors pull steam and non-condensibles from the main condensers at Plant Hatch. The gases drawn from the main condensers include hydrogen and oxygen. The offgas systems feature catalytic recombiners that function to turn the hydrogen and oxygen gases back into water.

There have been more than 25 hydrogen burns and detonations within offgas systems at boiling water reactors like Plant Hatch. The most recent event occurred at the Cooper Nuclear Plant in September 1999. The root cause of this most recent hydrogen detonation is not known, but it has been attributed to a valve throttled due to a procedure error.[54]

The Inservice Inspection (ISI) program at Hatch frequently finds and corrects valve problems such as the following examples from a recently submitted ISI report:[55]

> Internals of valve are worn beyond repair. Replace valve with new like kind valve MPL 1P41-F208D
>
> Replace drain valves 1B31-F051A, F052A, they are leaking by the seat. Code case N-416-1 is used. MPL 1B31-F052A
>
> Small crack in weld to pipe connection found for valve 1D11-F129. Weld will be removed and replaced by a 2 to 1 fillet weld that is resistant to the fatigue.

The application for license renewal submitted by Hatch's owner acknowledged the reality of component aging:

---

[54] Nuclear Regulatory Commission, Bulletin No. 78-03, "Potential Explosive Gas Mixture Accumulations Associated With BWR Offgas Systems Operations," February 8, 1978.

H. W. Bertini, Nuclear Safety Information Center, Oak Ridge National Laboratory, "Descriptions of Selected Accidents That Have Occurred at Nuclear Reactor Facilities," ORNL/NSIC-176, April 1980.

Nuclear Regulatory Commission, Daily Event Report Nos. 36192 and 36195, September 17, 1999.

[55] H. L. Sumner Jr., Vice President - Hatch Project Support, Southern Nuclear Operating Company Inc., to Nuclear Regulatory Commission, "Edwin I. Hatch Nuclear Plant - Unit 1 Third 10-Year Interval Inservice Inspection Program Owner's Activity Report," January 21, 2000, Table 3, "Unit 1, 1R16 Outage Abstract of Repairs, Replacements, or Corrective Measures Required for Continued Service."

> The detrimental effects of aging are assumed to be continuous and incremental. Thus, the detrimental effects of aging may increase as service life is extended, assuming no replacement of components.[56]

Yet even though valves purchased to higher quality standards in safety-related systems at Plant Hatch have repeatedly demonstrated detrimental effects of aging, Hatch's owner specifically excluded the gaseous radwaste system's valves from the scope of its aging management program[57] and from its ISI program.[58]

The valves that must be positioned properly to preclude untoward accumulations of hydrogen and subsequent detonations are not within the scope of the ISI program at Hatch and are not within the scope of any aging management program described in the Hatch license renewal application. Therefore, it is uncertain how there can be reasonable assurance that these valves will function as required to protect public health and the environment from hydrogen burns and detonations as required by the facility's current design and licensing bases. Of course, that uncertainty carries over into the license renewal term.

Requested Demand for Information: The petitioner requests the NRC to ask the owner of the Hatch Nuclear Plant the following questions via a Demand for Information:

1. What assurance exists that the gaseous radwaste system valves will function as required to preclude hydrogen burns and detonations?

2. What is the scope, frequency, and acceptance criteria for all testing, including preventative maintenance tasks, of the gaseous radwaste system valves will function as required to preclude hydrogen burns and detonations?

3. What has been the maintenance history for the gaseous radwaste system valves will function as required to preclude hydrogen burns and detonations?

---

[56] H. L. Sumner Jr., Vice President - Hatch Project Support, Southern Nuclear Operating Company, Inc., to Nuclear Regulatory Commission, "Edwin I. Hatch Nuclear Plant Application for Renewed Operating Licenses," February 29, 2000, Section 2.1.3.4, Components Subject to Periodic Replacement at a Set Frequency or Qualified Life.

[57] H. L. Sumner Jr., Vice President - Hatch Project Support, Southern Nuclear Operating Company, Inc., to Nuclear Regulatory Commission, "Edwin I. Hatch Nuclear Plant Application for Renewed Operating Licenses," February 29, 2000, Table 2.2-1, Plant Hatch System/Structure Function Scoping Results.

[58] H. L. Sumner Jr., Vice President - Hatch Project Support, Southern Nuclear Operating Company Inc., to Nuclear Regulatory Commission, "Edwin I. Hatch Nuclear Plant - Unit 1 Third 10-Year Interval Inservice Inspection Program Owner's Activity Report," January 21, 2000, Table 3, "Unit 1, 1R16 Outage Abstract of Repairs, Replacements, or Corrective Measures Required for Continued Service."

Request for Generic Communications: UCS requests that the NRC issue a generic communication to all operating plant owners alerting them to potential aging degradation of piping and components of the liquid and gaseous radwaste systems.

The petitioner detailed specific concerns about potential aging degradation of the liquid and gaseous radwaste systems at the Hatch Nuclear Plant that may result in an increased probability and/or consequences from design and licensing bases events. This potential aging degradation may also apply to liquid and gaseous radwaste systems at other operating nuclear power plants in the United States.

The petitioner requests that the NRC issue a generic communication to all operating plant owners, with the possible exception of the Hatch owner, alerting them to the potential aging degradation. This generic communication should advise the plant owners to review their preventative maintenance and aging management programs for the liquid and gaseous radwaste systems.

The NRC has already issued at least two Information Notices to plant owners about degradation of liquid radwaste system components. A 1979-era Information Notice[59] regarding liquid radwaste system degradation problems at the Millstone plant was apparently not even heeded by Millstone's owner based upon a second Information Notice[60] issued nearly twenty (20) years later and also involving liquid radwaste system degradation problems at the Millstone plant. Because it also appears that Hatch's owner did not heed both of these information notices, the NRC should consider issuing a more meaningful generic communication this time around.

[59] Nuclear Regulatory Commission, Information Notice 79-07, "Rupture of Radwaste Tanks," March 23, 1979.

[60] Nuclear Regulatory Commission, Information Notice 96-14, "Degradation of Radwaste Facility Equipment at Millstone Nuclear Power Station, Unit 1," March 1, 1996.

Proposed Rulemaking: Revise 10 CFR Parts 51 and 54 to include aging management for liquid and gaseous radioactive waste systems.

The petitioner detailed specific concerns about potential aging degradation of the liquid and gaseous radwaste systems at the Hatch Nuclear Plant that may result in an increased probability and/or consequences from design and licensing bases events. This potential aging degradation may also apply to liquid and gaseous radwaste systems at other operating nuclear power plants in the United States. The petitioner requests that the NRC initiate rulemaking actions necessary to revise 10 CFR Parts 51 and 54 to incorporate aging management for liquid and gaseous radioactive waste systems.

In 10 CFR 51 Appendix B to Subpart A, "Environment Effect of Renewing the Operating License of a Nuclear Power Plant," the NRC concluded that radiation exposures to the public and occupational exposures to workers during the license renewal term will continue at current levels below regulatory limits. This conclusion is predicated on the assumption that the components of the liquid and gaseous radwaste systems do not experience greater failure rates during the license renewal term. The aging degradation concerns described in Contentions Nos. 1 and 2 above can invalidate that assumption by increasing component failure rates. Hence, the conclusion of the NRC staff can only be valid when the liquid and gaseous radwaste systems are covered by aging management programs during the license renewal term.

10 CFR 54.4, "Scope," states:

> (a) Plant systems, structures, and components within the scope of this part are --
>
> (1) Safety-related systems, structures, and components which are those relied upon to remain functional during and following design-bases events (as defined in 10 CFR 50.49(b)(1)) to ensure the following functions --
>
> (i) The integrity of the reactor coolant pressure boundary;
>
> (ii) The capability to shut down the reactor and maintain it in a safe shutdown condition; or
>
> (iii) The capability to prevent or mitigate the consequences of accidents that could result in potential offsite exposure comparable to the guidelines in §50.34(a)(1) or §100.11 of this chapter, as applicable.
>
> (2) All nonsafety-related systems, structures, and components whose failure could prevent satisfactory accomplishment of any of the functions identified in paragraphs (a)(1)(i), (ii), or (iii) of this section.

From a review of the license renewal applications submitted by the owners of the Calvert Cliffs, Oconee, and Hatch nuclear plants, it appears that 10 CFR 54.4(a)(1)(iii) has been consistently interpreted to exclude the liquid and gaseous radwaste systems from aging management consideration under the rule. The petitioner requests the NRC to revise 10 CFR Part 54, and Part 51 if appropriate, to clarify that the liquid and gaseous radwaste systems must be covered by aging management programs during the license renewal term.

Liquid Radwaste System Schematic

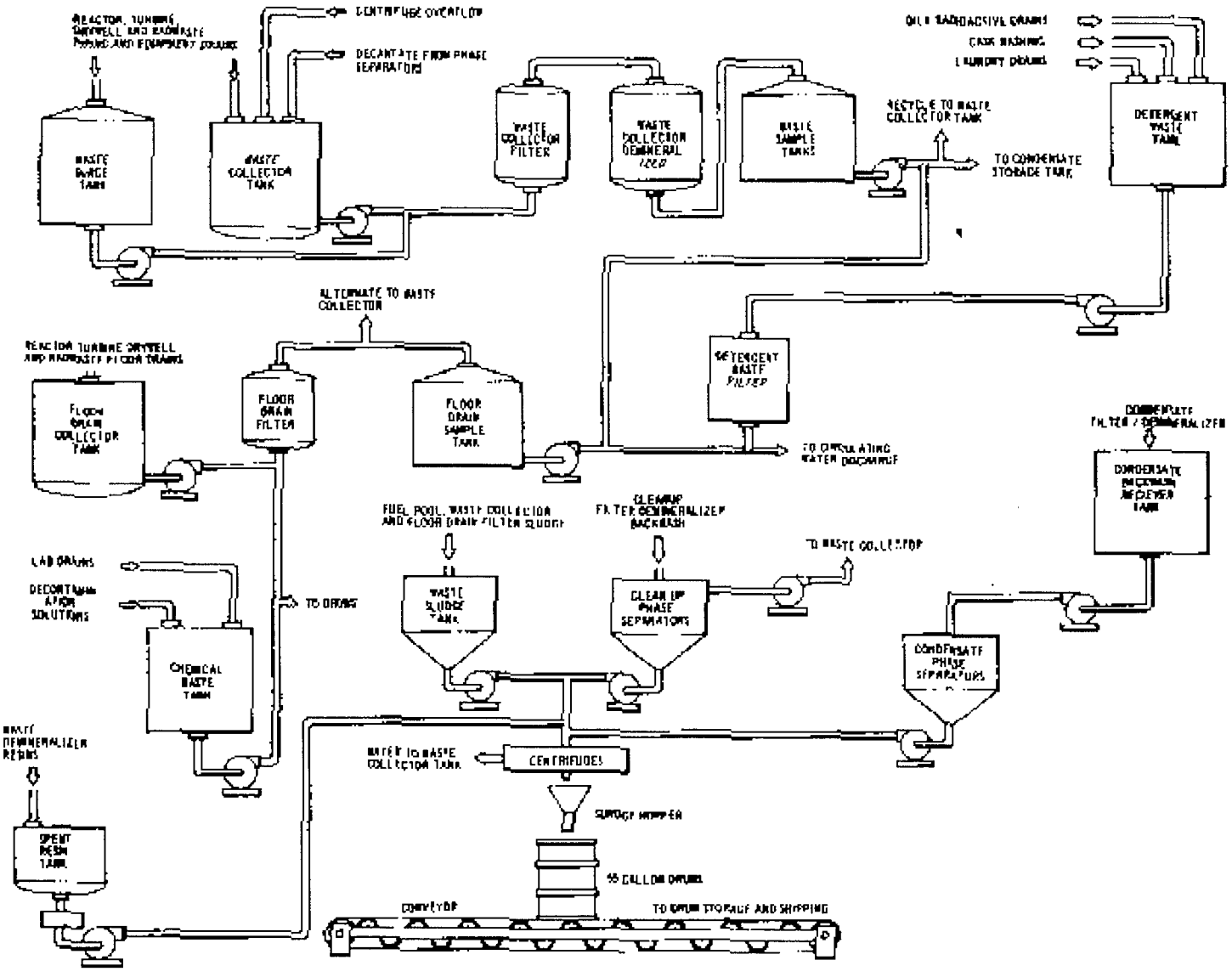
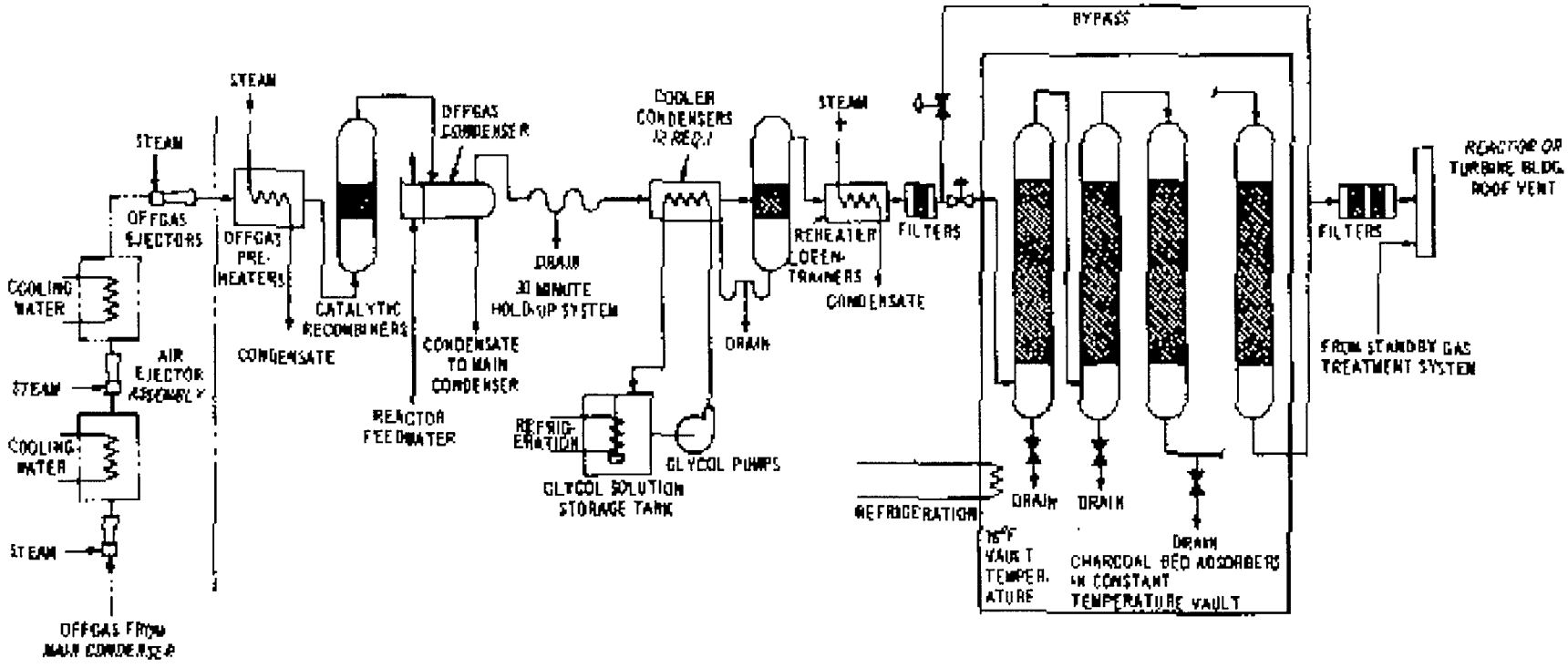
Gaseous Radwaste System Schematic