TABLE A-4

Dose Rates Outside Containment Following a Design Basis LOCA in Salem Unit 1 (1)

Location Code #	Location Room	Zone No. 1 Hour	1 Day	1 Week
	Areas Containing Post LOCA Sources (2)			
01045002	11 RHR Pmp Rm	VIII	VII	VII
01045003	11 RHR Hx Area	VIII	VII	VI
01045004	11 Cont. Sump Valve Rm	VIII	VII	VI
01045006	12 RHR Pmp Rm	VIII	VII	VII
01045007	12 RHR Hx Area	VIII	VII	VI
01045008	12 Cont. Sump Valve Rm	VIII	VII	VI
01064031	Pipeway	VIII	VII	VII
01084005	11 Safety Inj Pmp Rm	VIII	VII	VI
01084006	12 Safety Inj Pmp Rm	VIII	VII	VI
01084007	Pipe Alley	VIII	VII	VII
	West End of Pipeway	VII	VII	VI
01084010	11 Comp Cooling VA Rm	VII	VI	VI
01084026	Rm Next to 11 Chrg Pmp	VII	VII	VI
01084034	Chrg Pmp Valve Alley	VII	VII	VI
01084035	11 Chrg Pmp Rm	VIII	VII	VI
01084036	12 Chrg Pmp Rm	VIII	VII	VI
01084037	13 Chrg Pmp Rm	VII	VII	VI
01100008	Boric Acid Evap Rm (7)	VII	VI	VI
02078002	Top of 12 Hx Rm	VIII	VII	VII
02078003	BIT Rm Lower Level	VII	VII	VI
02078004	BIT Rm Upper Level	VIII	VII	VI
02078005	Mech. Pen. Area	VII	VII	VI
12100008	Boric Acid Evap Rm (7)	VII	VI	VI
	Areas Affected by post LOCA Sources (3)			
01045001	11 RHR Rm	VIII	VII	VII
	Shielded (4)	V	IV	III
01045002	11 RHR Pmp Rm (5)	III	II	I
01045005	Instrument Rack 102	VIII	VII	VII
	Shielded (4)	V	IV	III

TABLE A-4 (Cont.)

Location Code #	Location Room	Zone No. 1 Hour	1 Day	1 Week
	Areas Affected by Post LOCA Sources (3)			
01045006	12 RHR Pmp Rm (5)	III	II	I
01055002	11 RHR Valve Rm	V	IV	III
01055003	11 RHR Hx Rm	VIII	VII	VI
01055004	11 RHR Valve Rm	VIII	VII	VI
01055005	12 RHR Valve Rm	V	IV	III
01055006	12 RHR Hx Rm	VIII	VII	VI
01055007	12 RHR Valve Rm	VIII	VII	VI
01064001	4KV Vital Bus & Battery Rm	IV	III	II
01064003	Laundry & Chem Dr Pump Rm	IV	III	II
01064004	11 Monitor Tk & Pump Rm	IV	III	III
01064005	12 Monitor Tk & Pump Rm	V	IV	III
01064008	Waste Holdup Tk Rm	IV	III	II
01064009	Waste Holdup Tk Rm	IV	III	II
01064011	Waste Monitor Holdup Tank Rm	IV	III	II
01064014	11 Waste Gas Compressor Rm	IV	III	II
01064017	12 Waste Gas Compressor Rm	IV	III	II
01064020	Waste Gas Valve Area	IV	III	II
01064021	11 Gas Decay Tk	IV	III	II
01064022	12 Gas Decay Tk	IV	III	II
01064028	11 HUT Rm	IV	III	II
01064029	12 HUT Rm	IV	III	II
02078001	A, B, & C East Valves C.C	V	III	II
02078012	Elec Pen/Cont Rad Mon. Area (9)	V	III	II
02078006	Stm Gen Blowdown Area	VII	VII	VI
02078007	S.W. Piping Room	III	II	II
02078008	Mech. Pen Area	VII	VII	VI
02078009	S.W. Piping Rm	III	II	II
02078011	S.W. Piping Rm	III	II	II
01084002	460/230V Vital	IV	III	III
01084003	Aisle Outside SFP Pump	I	I	I
01084004	Spent Fuel Pit Pump Rm	V	III	III
01084008	Corridor at CC Hx	V	III	III
01084009	11 CC Pump Rm	V	III	III
01084012	12 CC Hx Rm	III	II	II
01084016	13 Aux FW Pump	III	II	II

TABLE A-4 (Cont.)

Location Code #	Location Room	Zone No. 1 Hour	1 Day	1 Week
	Areas Affected by Post LOCA Sources (3)			
01084018	LTD Hx Valve Rm	I	I	I
01084019	LTD Hx Rm	IV	III	II
01084020	Seal Water Hx Valve Rm	I	I	I
01084021	Seal Water Hx Rm	IV	III	II
01084022	Elec. Control Center	I	I	I
01084024	Vent Duct & Equipment Hatch	IV	III	II
01084025	Corridor at 11 Cont Spray	IV	III	II
01084027	CO2 Fire Equip Rm	III	II	II
01084029	11 Diesel FOST Rm	IV	III	II
01084038	Cont. Spray Area	IV	III	II
01084041	No.1 Aisle (6)	V	IV	III
01084046	Stairwell	V	III	III
02100002	Main Steam Pen Area	V	IV	III
02100003	Personnel Hatch	V	IV	III
01100005	Chemistry Lab (8)	V	IV	III
	Primary Sampling (8)	IV	III	II
01100006	Access Aisle	V	IV	III
01100007	Corridor at BAE (7)	III	II	I
01100008	Boric Acid Evap. Rm	V	IV	III
	BAE Room Door	I	I	I
01100009	S/G Blowdown Sample Rm	V	IV	III
01100013	Waste Evap Rm	V	III	III
01100014	Ion Exchanger Rm	V	III	III
01100015	BA Transfer Pumps	V	IV	III
01100019	Drum Storage Area	V	IV	III
12100006	Access Aisle (7)	III	II	I
1210007	Corridor at BAE (7)	III	II	I

TABLE A-4 (Cont.)

Notes

1. Dose rates are due to post accident sources only and do not include normal operating dose rates. Any area not listed is Zone I.

2. These are areas outside containment where equipment is located that is expected to contain recirculating sump water following a LOCA.

3. These areas do not contain recirculating sump water but will experience elevated dose rates due to equipment in adjacent areas.

4. This area is behind the partial wall separating this zone from the RHR pump room (Location Code # 01045002, 01045006).

5. This dose rate is due to the adjacent RHR pump room (Location Code # 01045002 or 01045006).

6. This area has the same shielding as the adjacent pump cubicles.

7. These areas are affected after the initiation of PASS.

8. The dose rates apply only in the east end of the room. Other areas will be a zone II or lower.

9. Dose rates are due to shine through containment. PASS lines on the west wall of the zone will produce a local radiation zone V at one hour and IV at one day.

TABLE A-5

Dose Rates Outside Containment Following a Design Basis LOCA in Salem Unit 2 (1)

Location Code #	Location Room	Zone No. 1 Hour	1 Day	1 Week
	Areas Containing Post LOCA Sources (2)			
12045002	21 RHR Pmp Rm	VIII	VII	VII
12045003	21 RHR Hx Area	VIII	VII	VI
12045004	21 Cont. Sump Valve Rm	VIII	VII	VI
12045006	22 RHR Pmp Rm	VIII	VII	VII
12045007	22 RHR Hx Area	VIII	VII	VI
12045008	22 Cont. Sump Valve Rm	VIII	VII	VI
12064031	Pipeway	VIII	VII	VII
12084005	21 Safety Inj Pmp Rm	VIII	VII	VI
12084006	22 Safety Inj Pmp Rm	VIII	VII	VI
12084007	Pipe Alley	VIII	VII	VII
	West End of Pipeway	VII	VII	VI
12084010	21 Comp Cooling VA Rm	VII	VI	VI
12084026	Rm Next to 21 Chrg Pmp	VII	VII	VI
12084034	Chrg Pmp Valve Alley	VII	VII	VI
12084035	21 Chrg Pmp Rm	VIII	VII	VI
12084036	22 Chrg Pmp Rm	VIII	VII	VI
12084037	23 Chrg Pmp Rm	VII	VII	VI
12100008	Boric Acid Evap Rm (7)	VII	VI	VI
13078002	Top of 22 Hx Rm	VIII	VII	VII
13078003	BIT Rm Lower Level	VII	VII	VI
13078004	BIT Rm Upper Level	VIII	VII	VI
13078005	Mech. Pen. Area	VII	VII	VI
	Areas Affected by post LOCA Sources (3)			
12045001	21 RHR Rm	VIII	VII	VII
	Shielded (4)	V	IV	III
12045002	21 RHR Pmp Rm (5)	III	II	I
12045005	Instrument Rack 102	VIII	VII	VII
	Shielded (4)	V	IV	III

TABLE A-5 (Cont.)

Location Code #	Location Room	Zone No. 1 Hour	1 Day	1 Week
	Areas Affected by Post LOCA Sources (3)			
12045006	22 RHR Pmp Rm (5)	III	II	I
12055002	21 RHR Valve Rm	V	IV	III
12055003	21 RHR Hx Rm	VIII	VII	VI
12055004	21 RHR Valve Rm	VIII	VIII	VI
12055005	22 RHR Valve Rm	V	IV	III
12055006	22 RHR Hx Rm	VIII	VII	VI
12055007	22 RHR Valve Rm	VIII	VII	VI
12064001	4KV Vital Bus & Battery Rm	IV	III	II
12064003	Laundry & Chem Dr Pump Rm	IV	III	II
12064004	21 Monitor Tk & Pump Rm	IV	III	III
12064005	22 Monitor Tk & Pump Rm	V	IV	III
12064008	Waste Holdup Tk Rm	IV	III	II
12064009	Waste Holdup Tk Rm	IV	III	II
12064011	Waste Monitor Holdup Tank Rm	IV	III	II
12064014	21 Waste Gas Compressor Rm	IV	III	II
12064017	22 Waste Gas Compressor Rm	IV	III	II
12064020	Waste Gas Valve Area	IV	III	II
12064021	21 Gas Decay Tk	IV	III	II
12064022	22 Gas Decay Tk	IV	III	II
12064028	21 HUT Rm	IV	III	II
12064029	22 HUT Rm	IV	III	II
13078001	A, B, & C East Valves C.C	V	III	II
13078012	Elec Pen/Cont Rad Mon. Area (9)	V	III	II
13078006	Stm Gen Blowdown Area	VII	VII	VI
13078007	S.W. Piping Room	III	II	II
13078008	Mech. Pen Area	VII	VII	VI
13078009	S.W. Piping Rm	III	II	II
13078011	S.W. Piping Rm	III	II	II
12084002	460/230V Vital	IV	III	III
12084003	Aisle Outside SFP Pump	I	I	I
12084004	Spent Fuel Pit Pump Rm	V	III	III
12084008	Corridor at CC Hx	V	III	III
12084009	21 CC Pump Rm	V	III	III
12084012	22 CC Hx Rm	III	II	II
12084016	23 Aux FW Pump	III	II	II

TABLE A-5 (Cont.)

Location Code #	Location Room	Zone No. 1 Hour	1 Day	1 Week
	Areas Affected by Post LOCA Sources (3)			
12084018	LTD Hx Valve Rm	I	I	I
12084019	LTD Hx Rm	IV	III	II
12084020	Seal Water Hx Valve Rm	I	I	I
12084021	Seal Water Hx Rm	IV	III	II
12084022	Elec. Control Center	I	I	I
12084024	Vent Duct & Equipment Hatch	IV	III	II
12084025	Corridor at 21 Cont Spray	IV	III	II
12084027	CO2 Fire Equip Rm	III	II	II
12084029	21 Diesel FOST Rm	IV	III	II
12084038	Cont. Spray Area	IV	III	II
12084041	No.2 Aisle (6)	V	IV	III
12084046	Stairwell	V	III	III
13100002	Main Steam Pen Area	V	IV	III
13100003	Personnel Hatch	V	IV	III
12100005	Counting Room Lab (8)	IV	III	II
12100006	Access Aisle	V	IV	III
12100007	Corridor at BAE (7)	III	II	I
12100008	Boric Acid Evap. Rm	V	IV	III
	BAE Room Door	I	I	I
12100009	PASS Room (10)	V	IV	III
12100013	Waste Evap Rm	V	III	III
12100014	Ion Exchanger Rm	V	III	III
12100015	BA Transfer Pumps	V	IV	III
12100019	Drum Storage Area	V	IV	III

TABLE A-5 (Cont.)

Notes

1. Dose rates are due to post accident sources only and do not include normal operating dose rates. Any area not listed is Zone I.

2. These are areas outside containment where equipment is located that is expected to contain recirculating sump water following a LOCA.

3. These areas do not contain recirculating sump water but will experience elevated dose rates due to equipment in adjacent areas.

4. This area is behind the partial wall separating this zone from the RHR pump room (Location Code # 12045002, 12045006).

5. This dose rate is due to the adjacent RHR pump room (Location Code # 12045002 or 12045006).

6. This area has the same shielding as the adjacent pump cubicles.

7. These areas are affected after the initiation of PASS.

8. The dose rates apply only in the north end of the room. Other areas will be a zone I.

9. Dose rates are due to shine through containment. PASS lines on the west wall of the zone will produce a local radiation zone V at one hour and IV at one day.

10. Dose rates are due to external sources and will allow limited access to obtain samples. Post accident sampling is addressed in the response to item 2.1.8.a.

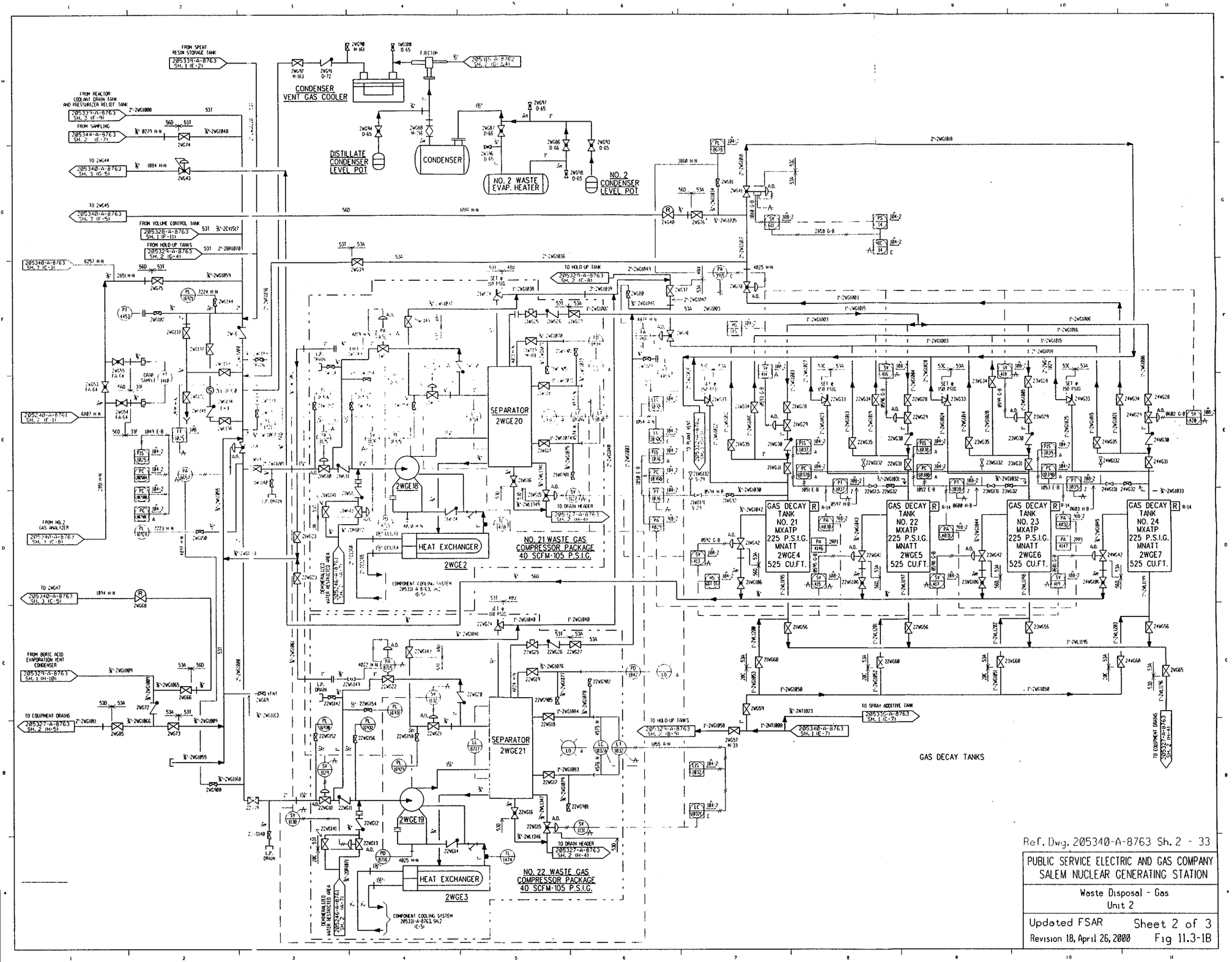

NOTE: FOR VALVE MARK NO'S NOT SHOWN ON THIS SHEET, REFER TO MMS.

Ref. Dwg. 205340-A-8763 Sh. 2 - 33

PUBLIC SERVICE ELECTRIC AND GAS COMPANY
SALEM NUCLEAR GENERATING STATION

Waste Disposal - Gas
Unit 2

Updated FSAR Sheet 2 of 3
Revision 18, April 26, 2000 Fig 11.3-1B

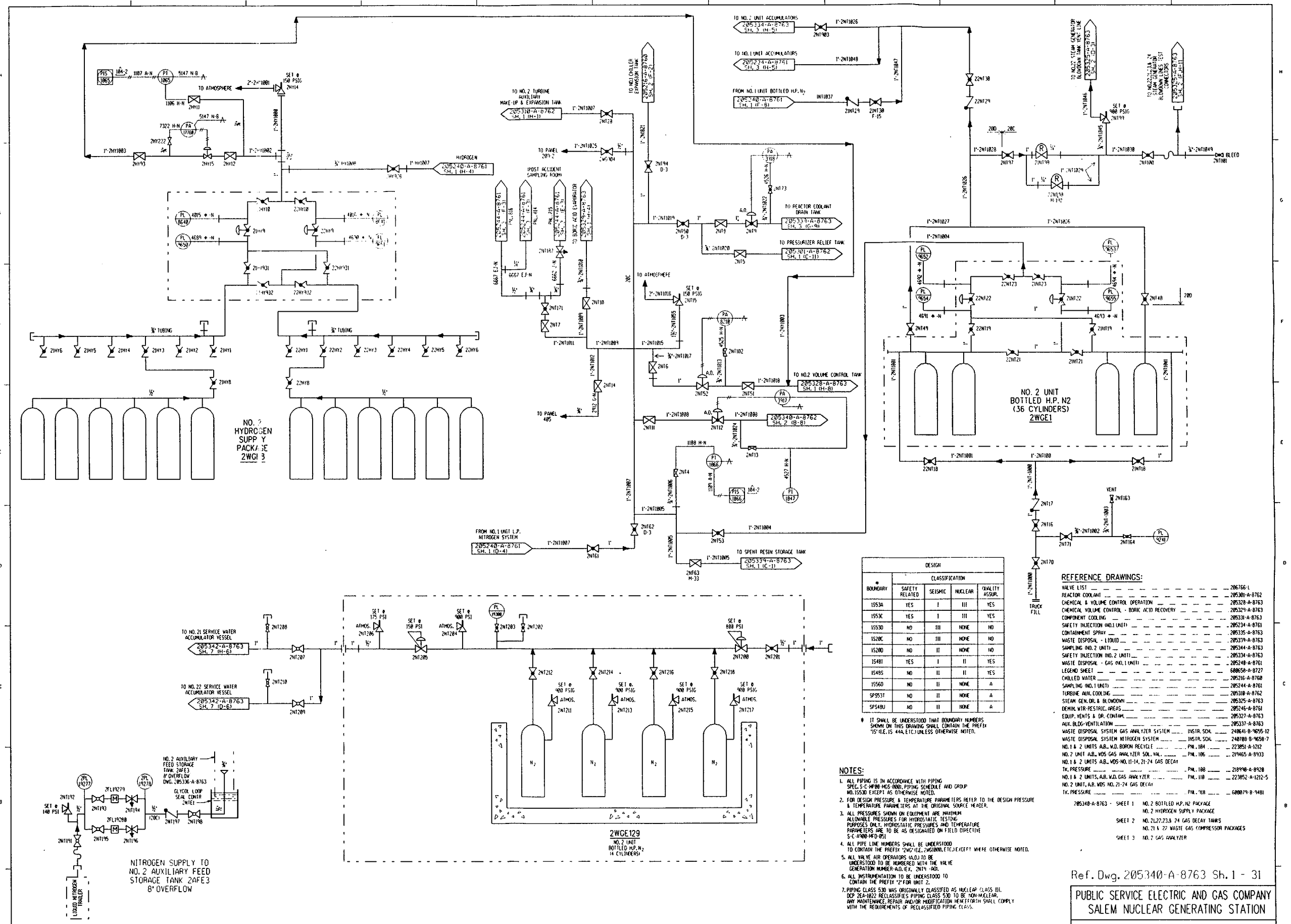

BOUNDARY	DESIGN CLASSIFICATION			
	SAFETY RELATED	SEISMIC	NUCLEAR	QUALITY ASSUR.
1553A	YES	I	III	YES
1553C	YES	I	III	YES
1553D	NO	III	NONE	NO
1520C	NO	III	NONE	NO
1520D	NO	II	NONE	NO
1548J	YES	I	II	YES
1549S	NO	II	II	YES
1556D	NO	II	NONE	A
SF953T	NO	II	NONE	A
SF548U	NO	II	NONE	A

* IT SHALL BE UNDERSTOOD THAT BOUNDARY NUMBERS SHOWN ON THIS DRAWING SHALL CONTAIN THE PREFIX '15' (I.E. 15 444, ETC.) UNLESS OTHERWISE NOTED.

NOTES:

1. ALL PIPING IS IN ACCORDANCE WITH PIPING SPEC. S-C-HP08-MDS-0001, PIPING SCHEDULE AND GROUP NO. 1553D EXCEPT AS OTHERWISE NOTED.
2. FOR DESIGN PRESSURE & TEMPERATURE PARAMETERS REFER TO THE DESIGN PRESSURE & TEMPERATURE PARAMETERS AT THE ORIGINAL SOURCE HEADER.
3. ALL PRESSURES SHOWN ON EQUIPMENT ARE MAXIMUM ALLOWABLE PRESSURES FOR HYDROSTATIC TESTING PURPOSES ONLY. HYDROSTATIC PRESSURES AND TEMPERATURE PARAMETERS ARE TO BE AS DESIGNATED ON FIELD DIRECTIVE S-C-A008-MFD-051.
4. ALL PIPE LINE NUMBERS SHALL BE UNDERSTOOD TO CONTAIN THE PREFIX '2WG' (I.E., 2WG1000, ETC.) EXCEPT WHERE OTHERWISE NOTED.
5. ALL VALVE AIR OPERATORS (A.O.) TO BE UNDERSTOOD TO BE NUMBERED WITH THE VALVE GENERATION NUMBER-A.O. (E.X., 2N14 -AOR.
6. ALL INSTRUMENTATION TO BE UNDERSTOOD TO CONTAIN THE PREFIX '2' FOR UNIT 2.
7. PIPING CLASS 530 WAS ORIGINALLY CLASSIFIED AS NUCLEAR CLASS III. DCP 2EA-1022 RECLASSIFIES PIPING CLASS 530 TO BE NON-NUCLEAR. ANY MAINTENANCE, REPAIR AND/OR MODIFICATION HENCEFORTH SHALL COMPLY WITH THE REQUIREMENTS OF RECLASSIFIED PIPING CLASS.

REFERENCE DRAWINGS:

VALVE LIST	206766-L
REACTOR COOLANT	205301-A-8762
CHEMICAL & VOLUME CONTROL OPERATION	205328-A-8763
CHEMICAL VOLUME CONTROL - BORIC ACID RECOVERY	205329-A-8763
COMPONENT COOLING	205331-A-8763
SAFETY INJECTION (NO.1 UNIT)	205234-A-8761
CONTAINMENT SPRAY	205335-A-8763
WASTE DISPOSAL - LIQUID	205339-A-8763
SAMPLING (NO. 2 UNIT)	205344-A-8763
SAFETY INJECTION (NO. 2 UNIT)	205334-A-8763
WASTE DISPOSAL - GAS (NO. 1 UNIT)	205240-A-8761
LEGEND SHEET	680658-A-8727
CHILLED WATER	205216-A-8760
SAMPLING (NO. 1 UNIT)	205244-A-8761
TURBINE AUX. COOLING	205318-A-8762
STEAM GEN. DR. & BLOWDOWN	205325-A-8763
DEMIN. WTR-RESTRIC. AREAS	205245-A-8761
EQUIP. VENTS & DR.-CONTAM.	205327-A-8763
AUX. BLDG-VENTILATION	205337-A-8763
WASTE DISPOSAL SYSTEM GAS ANALYZER SYSTEM	240641-B-9655-12
WASTE DISPOSAL SYSTEM NITROGEN SYSTEM	240788-B-9658-7
NO. 1 & 2 UNITS A.B., W.D. BORON RECYCLE	223851-A-1212
NO. 2 UNIT A.B., WDS GAS ANALYZER SOL. VAL.	219465-A-8933
NO. 1 & 2 UNITS A.B., WDS-NO. 11-14, 21-24 GAS DECAY TK. PRESSURE	218998-A-8928
NO. 1 & 2 UNITS, A.B. W.D. GAS ANALYZER	223852-A-1212-5
NO. 2 UNIT, A.B. WDS NO. 21-24 GAS DECAY TK. PRESSURE	680879-B-9481

205340-A-8763 - SHEET 1 NO. 2 BOTTLED H.P. N2 PACKAGE
NO. 2 HYDROGEN SUPPLY PACKAGE
SHEET 2 NO. 21,22,23 & 24 GAS DECAY TANKS
NO. 21 & 22 WASTE GAS COMPRESSOR PACKAGES
SHEET 3 NO. 2 GAS ANALYZER

Ref. Dwg. 205340-A-8763 Sh. 1 - 31

PUBLIC SERVICE ELECTRIC AND GAS COMPANY
SALEM NUCLEAR GENERATING STATION

Gaseous Waste Disposal System
Unit 2

Updated FSAR — Sheet 1 of 3
Revision 18, April 26, 2000 — Fig 11.3-1B

NOTE: FOR VALVE MARK NOS NOT SHOWN ON THIS SHEET, REFER TO MNS.

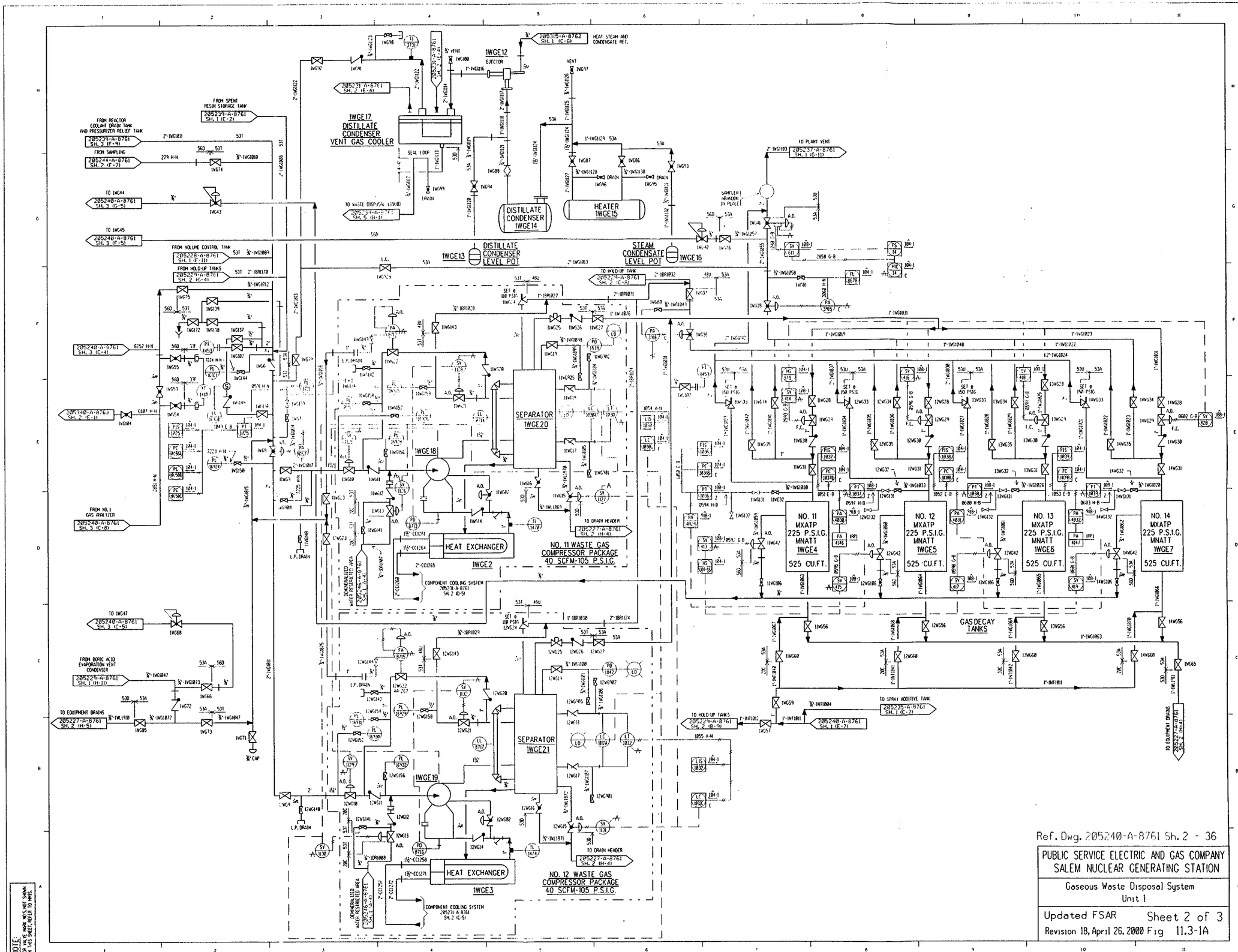

Ref. Dwg. 205240-A-8761 Sh. 2 - 36

PUBLIC SERVICE ELECTRIC AND GAS COMPANY
SALEM NUCLEAR GENERATING STATION

Gaseous Waste Disposal System
Unit 1

Updated FSAR Sheet 2 of 3
Revision 18, April 26, 2000 Fig 11.3-1A

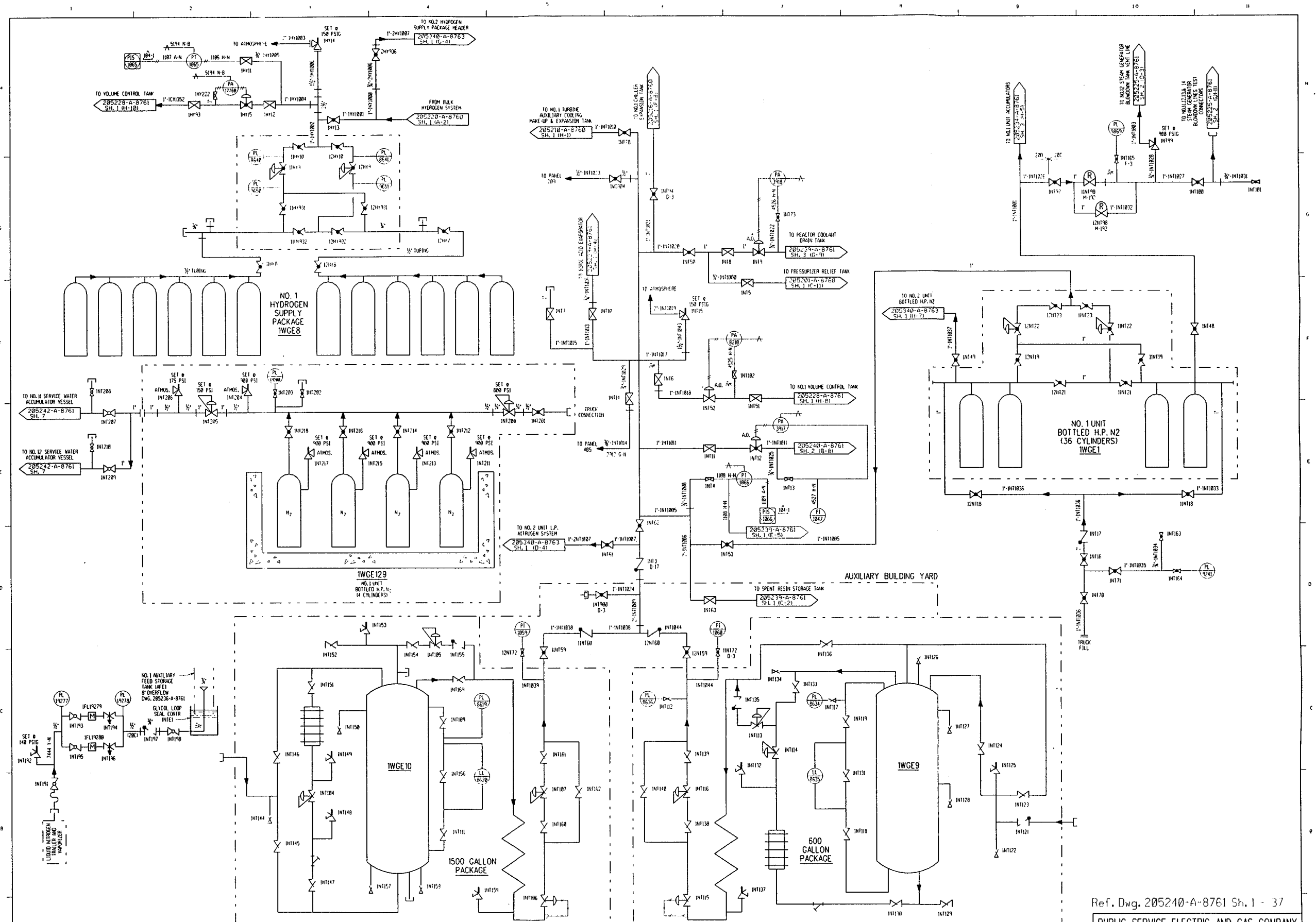

NOTES:

1. PIPING SCHEDULE DESIGNATIONS SHOWN ONLY FOR SEISMIC AND/OR NUCLEAR PIPING.
2. FOR DESIGN PRESSURE & TEMPERATURE PARAMETERS REFER TO THE DESIGN PRESSURE & TEMPERATURE PARAMETERS AT THE ORIGINAL SOURCE HEADER.
3. ALL PRESSURES SHOWN ON EQUIPMENT ARE MAXIMUM ALLOWABLE PRESSURES FOR HYDROSTATIC TESTING PURPOSES ONLY. HYDROSTATIC PRESSURES AND TEMPERATURE PARAMETERS ARE TO BE AS DESIGNATED ON FIELD DIRECTIVE S-C-A900-HFD-051
4. ALL PIPE LINE NUMBERS SHALL BE UNDERSTOOD TO CONTAIN THE PREFIX "1WGW=1WG1000, etc.) EXCEPT WHERE OTHERWISE NOTED.
5. ALL PIPING IS IN ACCORDANCE WITH PIPING SPECIFICATION 61-6200. THE PIPING SCHEDULE AND GROUP NOS. ARE AS NOTED ON THIS DRAWING AND PREFIXED WITH "15".
6. ALL VALVE AIR OPERATORS (AO.) TO BE UNDERSTOOD TO BE NUMBERED WITH THE VALVE GENERATION NUMBER-A.O.(EX. INT12 -AO).
7. ALL INSTRUMENTATION TO BE UNDERSTOOD TO CONTAIN THE PREFIX "1" FOR UNIT 1.
8. PIPING CLASS 530 WAS ORIGINALLY CLASSIFIED AS NUCLEAR CLASS III. DCP 1EA-1028 RECLASSIFIES PIPING CLASS 530 TO BE NON-NUCLEAR. ANY MAINTENANCE, REPAIR AND/OR MODIFICATION HEREFORTH SHALL COMPLY WITH THE REQUIREMENTS OF RECLASSIFIED PIPING CLASS.

NOTE: FOR VALVE MARK NOS. NOT SHOWN ON THIS SHEET, REFER TO MMDS.

Ref. Dwg. 205240-A-8761 Sh. 1 - 37

PUBLIC SERVICE ELECTRIC AND GAS COMPANY
SALEM NUCLEAR GENERATING STATION

Gaseous Waste Disposal System
Unit 1

Updated FSAR
Revision 18, April 26, 2000

Sheet 1 of 3
Fig 11.3-1A

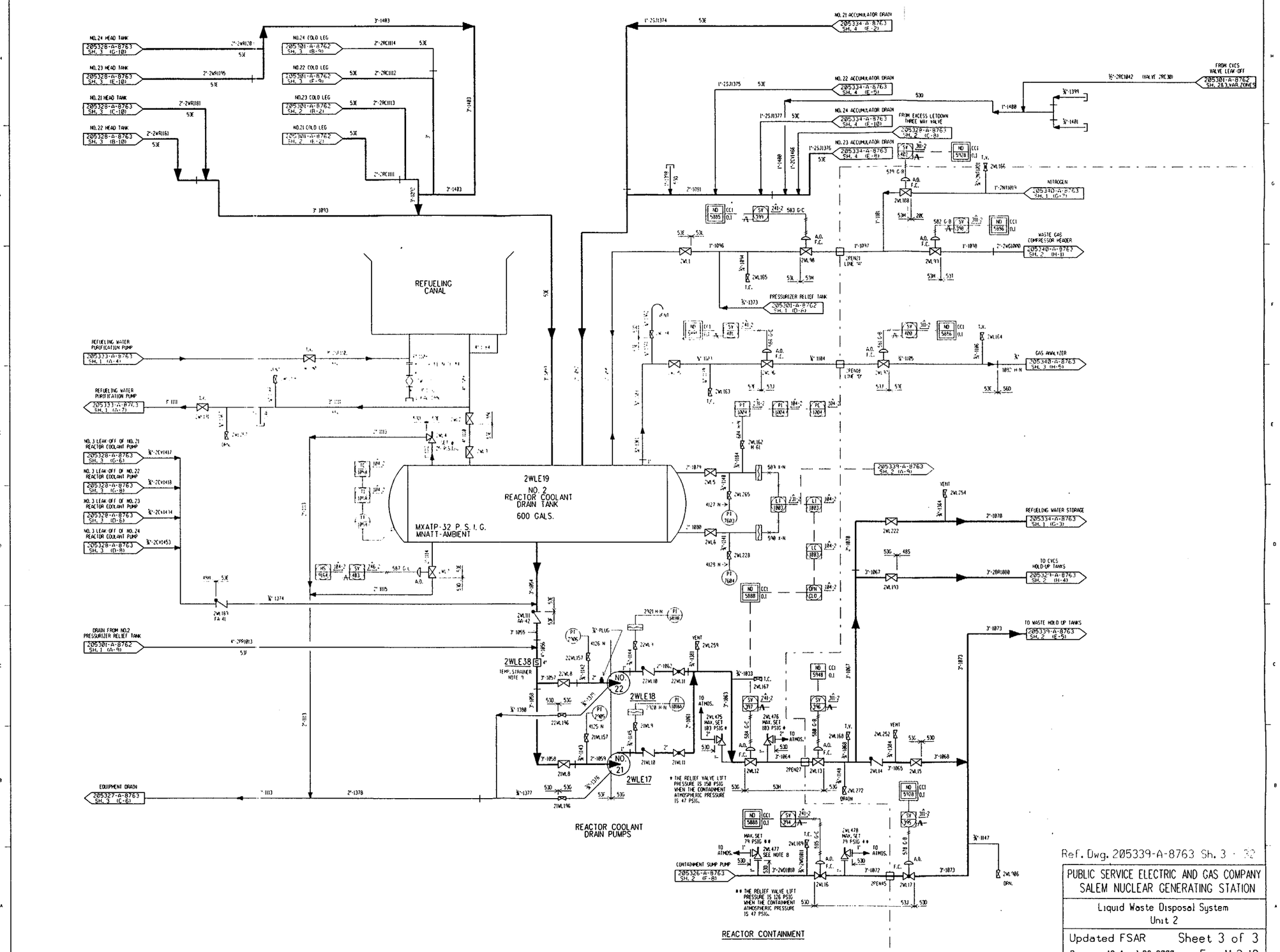

NOTE: FOR VALVE NOTE NOT SHOWN ON THIS SHEET, REFER TO MMS.

Ref. Dwg. 205339-A-8763 Sh. 3 - 32

PUBLIC SERVICE ELECTRIC AND GAS COMPANY
SALEM NUCLEAR GENERATING STATION

Liquid Waste Disposal System
Unit 2

Updated FSAR Sheet 3 of 3
Revision 18, April 26, 2000 Fig 11.2-1B

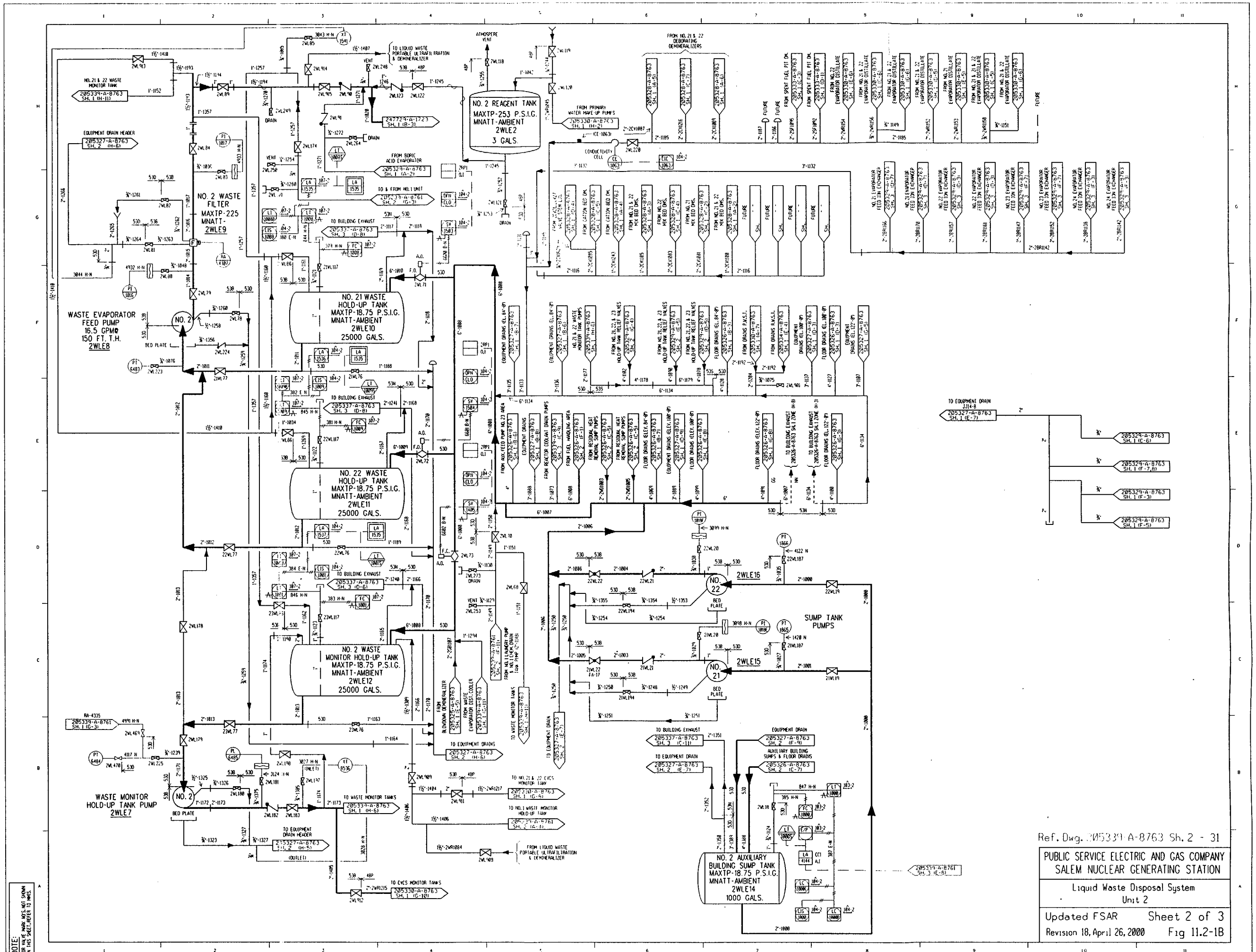

Ref. Dwg. 205331-A-8763 Sh. 2 - 31

PUBLIC SERVICE ELECTRIC AND GAS COMPANY
SALEM NUCLEAR GENERATING STATION

Liquid Waste Disposal System
Unit 2

Updated FSAR Sheet 2 of 3
Revision 18, April 26, 2000 Fig 11.2-1B

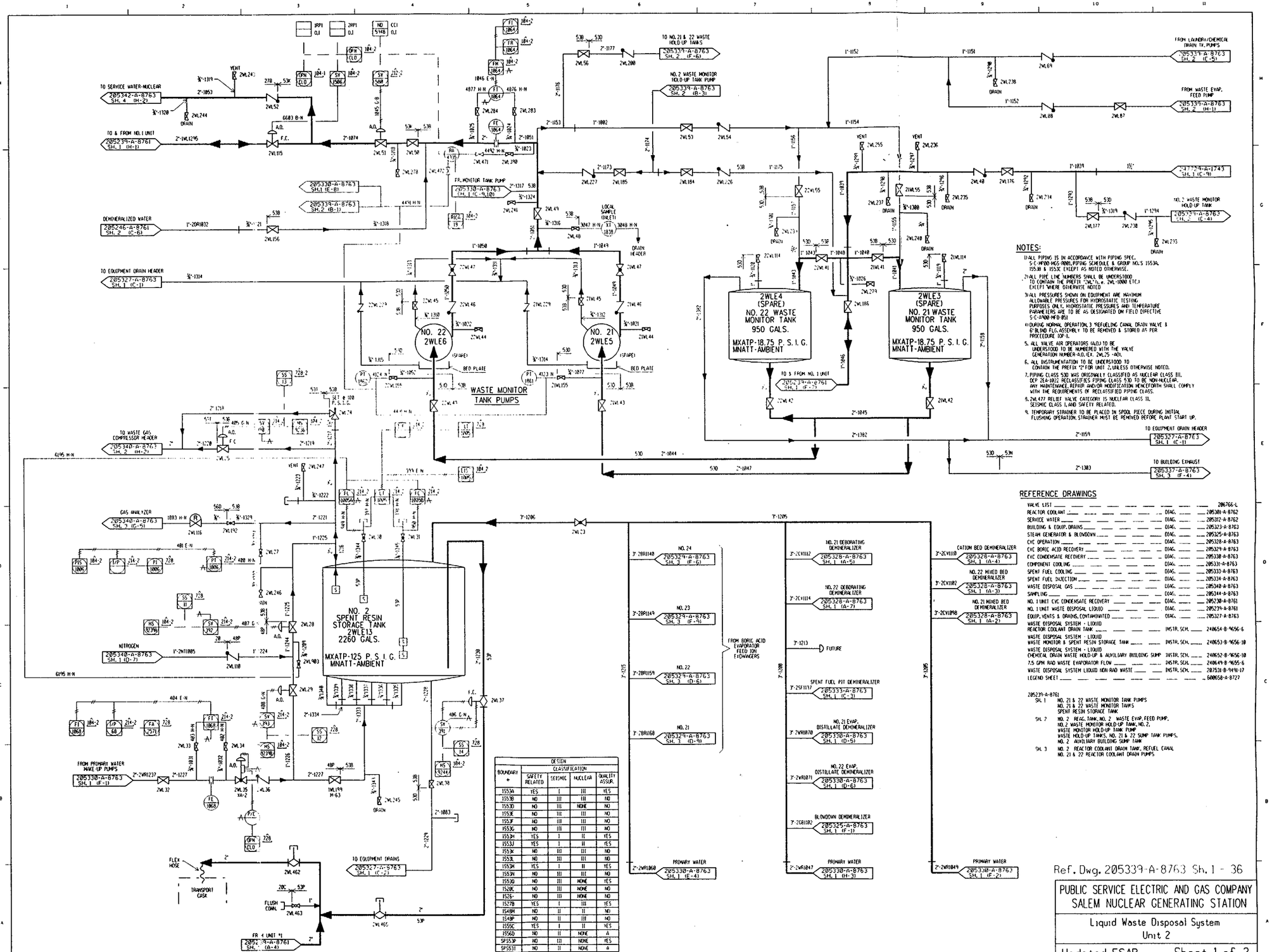

NOTES:

1) ALL PIPING IS IN ACCORDANCE WITH PIPING SPEC. S-CP200-MGS-R001, PIPING SCHEDULE & GROUP NO.'S 1553AL 1553B & 1553C EXCEPT AS NOTED OTHERWISE.
2) ALL PIPE LINE NUMBERS SHALL BE UNDERSTOOD TO CONTAIN THE PREFIX "2WL" (i.e. 2WL-1000 ETC.) EXCEPT WHERE OTHERWISE NOTED
3) ALL PRESSURES SHOWN ON EQUIPMENT ARE MAXIMUM ALLOWABLE PRESSURES FOR HYDROSTATIC TESTING PURPOSES ONLY. HYDROSTATIC PRESSURES AND TEMPERATURE PARAMETERS ARE TO BE AS DESIGNATED ON FIELD DIRECTIVE S-C-A200-MFD-B50
4) DURING NORMAL OPERATION, 3" REFUELING CANAL DRAIN VALVE & 6" BLIND FLG. ASSEMBLY TO BE REMOVED & STORED AS PER PROCEDURE TOP-1.
5. ALL VALVE AIR OPERATORS (A.O.) TO BE UNDERSTOOD TO BE NUMBERED WITH THE VALVE GENERATION NUMBER-A.O. (EX. 2WL25 -A01).
6. ALL INSTRUMENTATION TO BE UNDERSTOOD TO CONTAIN THE PREFIX "2" FOR UNIT 2, UNLESS OTHERWISE NOTED.
7. PIPING CLASS 530 WAS ORIGINALLY CLASSIFIED AS NUCLEAR CLASS III. DCP 2EA-1072 RECLASSIFIES PIPING CLASS 530 TO BE NON-NUCLEAR. ANY MAINTENANCE, REPAIR AND/OR MODIFICATION HENCEFORTH SHALL COMPLY WITH THE REQUIREMENTS OF RECLASSIFIED PIPING CLASS.
8. 2WL477 RELIEF VALVE CATEGORY IS NUCLEAR CLASS II, SEISMIC CLASS I, AND SAFETY RELATED.
9. TEMPORARY STRAINER TO BE PLACED IN SPOOL PIECE DURING INITIAL FLUSHING OPERATION. STRAINER MUST BE REMOVED BEFORE PLANT START UP.

BOUNDARY #	DESIGN CLASSIFICATION			
	SAFETY RELATED	SEISMIC	NUCLEAR	QUALITY ASSUR.
1553A	YES	I	III	YES
1553B	NO	III	III	NO
1553D	NO	III	NONE	NO
1553E	NO	III	III	NO
1553F	NO	III	III	NO
1553G	NO	III	III	NO
1553H	YES	I	II	YES
1553J	YES	I	II	YES
1553K	NO	III	III	NO
1553L	NO	III	III	NO
1553M	YES	I	II	YES
1553N	NO	III	III	NO
1553O	NO	III	NONE	YES
1520C	NO	III	NONE	NO
1526-	NO	III	NONE	NO
1527B	YES	I	III	YES
1548H	NO	II	II	NO
1548P	NO	II	III	NO
1555C	YES	I	II	YES
1556D	NO	II	NONE	A
SP553P	NO	III	NONE	YES
SP553T	NO	II	NONE	A

* IT SHALL BE UNDERSTOOD THAT BOUNDARY NUMBERS SHOWN ON THIS DWG. SHALL CONTAIN THE PREFIX "1S" (I.E., 1S44A, ETC.) UNLESS OTHERWISE NOTED.

REFERENCE DRAWINGS

VALVE LIST		206766-L
REACTOR COOLANT	DIAG.	205301-A-8762
SERVICE WATER	DIAG.	205312-A-8762
BUILDING & EQUIP. DRAINS	DIAG.	205323-A-8763
STEAM GENERATOR & BLOWDOWN	DIAG.	205325-A-8763
CVC OPERATION	DIAG.	205328-A-8763
CVC BORIC ACID RECOVERY	DIAG.	205329-A-8763
CVC CONDENSATE RECOVERY	DIAG.	205330-A-8763
COMPONENT COOLING	DIAG.	205331-A-8763
SPENT FUEL COOLING	DIAG.	205333-A-8763
SPENT FUEL DUECTION	DIAG.	205334-A-8763
WASTE DISPOSAL GAS	DIAG.	205340-A-8763
SAMPLING	DIAG.	205344-A-8763
NO. 1 UNIT CVC CONDENSATE RECOVERY	DIAG.	205230-A-8761
NO. 1 UNIT WASTE DISPOSAL LIQUID	DIAG.	205239-A-8761
EQUIP. VENTS & DRAINS, CONTAMINATED	DIAG.	205327-A-8763
WASTE DISPOSAL SYSTEM - LIQUID REACTOR COOLANT DRAIN TANK	INSTR. SCH.	240654-B-9656-6
WASTE DISPOSAL SYSTEM - LIQUID WASTE MONITOR & SPENT RESIN STORAGE TANK	INSTR. SCH.	240653-B-9656-10
WASTE DISPOSAL SYSTEM - LIQUID CHEMICAL DRAIN WASTE HOLD-UP & AUXILIARY BUILDING SUMP	INSTR. SCH.	240652-B-9656-10
7.5 GPM RAD WASTE EVAPORATOR FLOW	INSTR. SCH.	240649-B-9655-6
WASTE DISPOSAL SYSTEM LIQUID NON-RAD WASTE	INSTR. SCH.	207531-B-9491-17
LEGEND SHEET		600658-A-8727

205239-A-8761
SH. 1 NO. 21 & 22 WASTE MONITOR TANK PUMPS
NO. 21 & 22 WASTE MONITOR TANKS
SPENT RESIN STORAGE TANK
SH. 2 NO. 2 REAC. TANK, NO. 2 WASTE EVAP. FEED PUMP, NO. 2 WASTE MONITOR HOLD-UP TANK, NO. 2, WASTE MONITOR HOLD-UP TANK PUMP WASTE HOLD-UP TANKS, NO. 21 & 22 SUMP TANK PUMPS, NO. 2 AUXILIARY BUILDING SUMP TANK
SH. 3 NO. 2 REACTOR COOLANT DRAIN TANK, REFUEL CANAL NO. 21 & 22 REACTOR COOLANT DRAIN PUMPS

Ref. Dwg. 205339-A-8763 Sh. 1 - 36

PUBLIC SERVICE ELECTRIC AND GAS COMPANY
SALEM NUCLEAR GENERATING STATION

Liquid Waste Disposal System
Unit 2

Updated FSAR — Sheet 1 of 3
Revision 18, April 26, 2000 — Fig 11.2-1B

NOTE: FOR VALVE, PIPING, NOZZLE, ETC. INFORM. SEE MGS-SPECIFICATION.

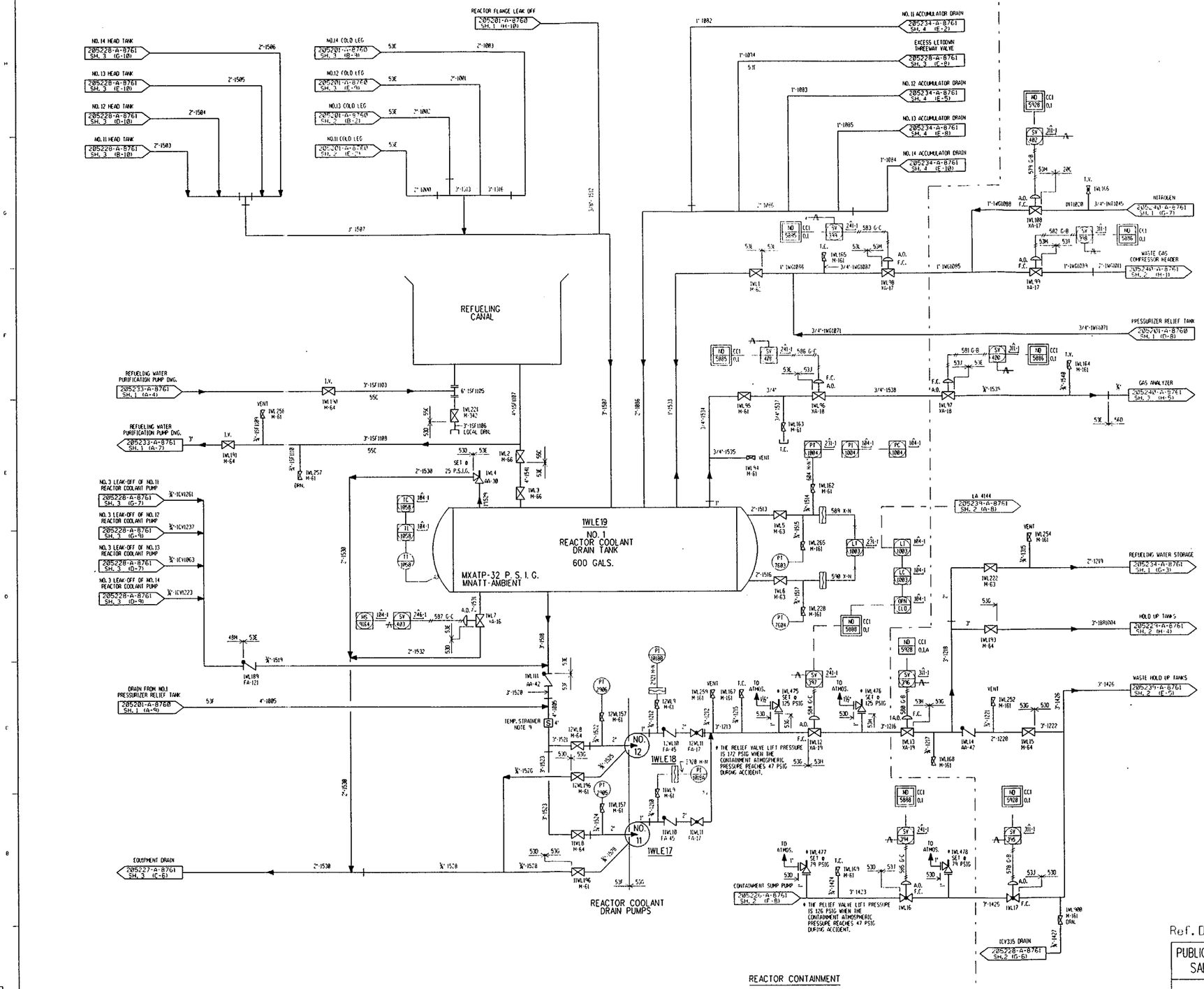

NOTE: FOR VALVE MAP NOS. NOT SHOWN ON THIS SHEET, REFER TO MMS.

Ref. Dwg. 205239-A-8761 Sh. 3 - 45

PUBLIC SERVICE ELECTRIC AND GAS COMPANY
SALEM NUCLEAR GENERATING STATION

Liquid Waste Disposal System
Unit 1

Updated FSAR Sheet 3 of 5
Revision 18, April 26, 2000 Fig 11.2-1A

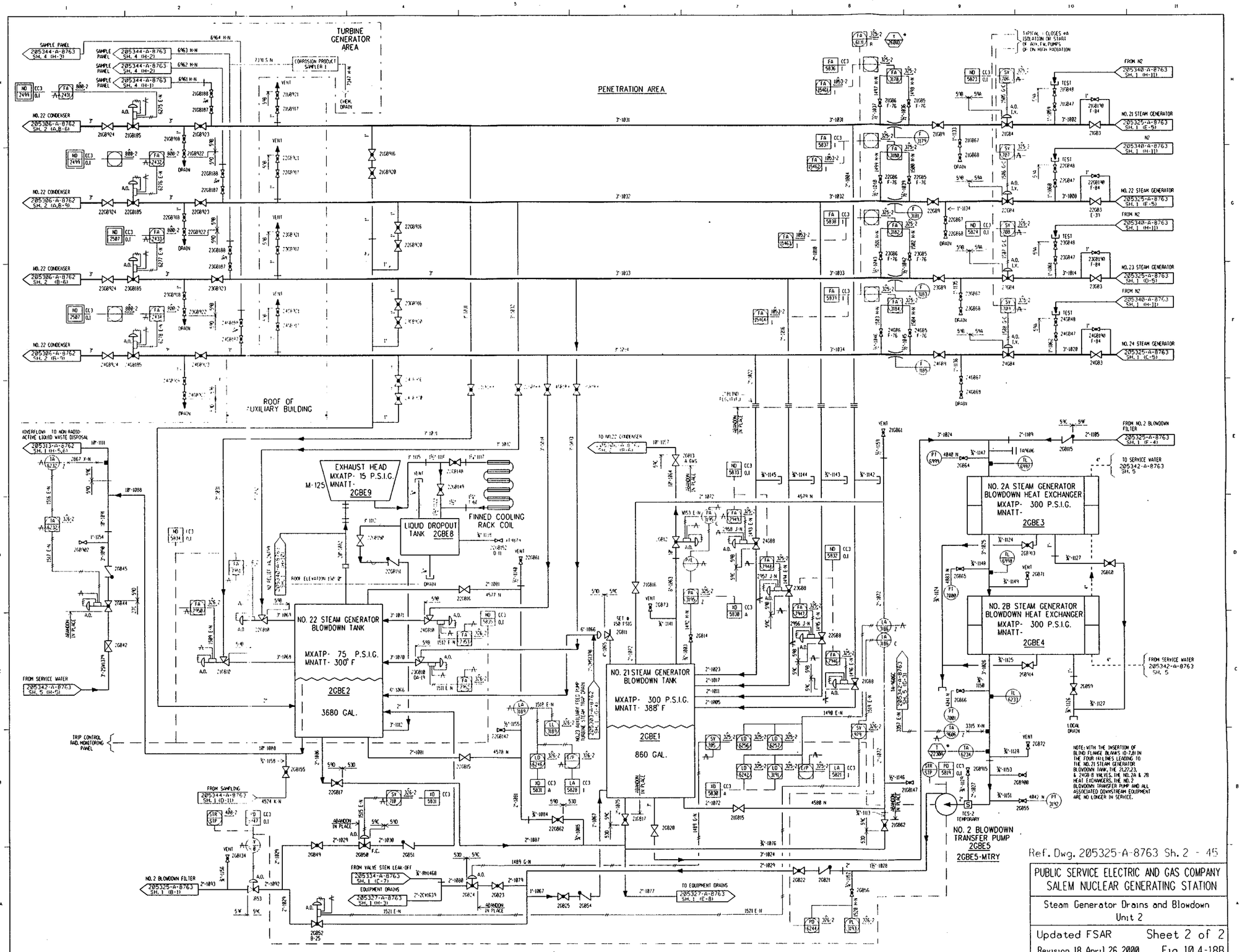

Ref. Dwg. 205325-A-8763 Sh. 2 - 45

PUBLIC SERVICE ELECTRIC AND GAS COMPANY
SALEM NUCLEAR GENERATING STATION

Steam Generator Drains and Blowdown
Unit 2

Updated FSAR Sheet 2 of 2
Revision 18, April 26, 2000 Fig 10.4-18B

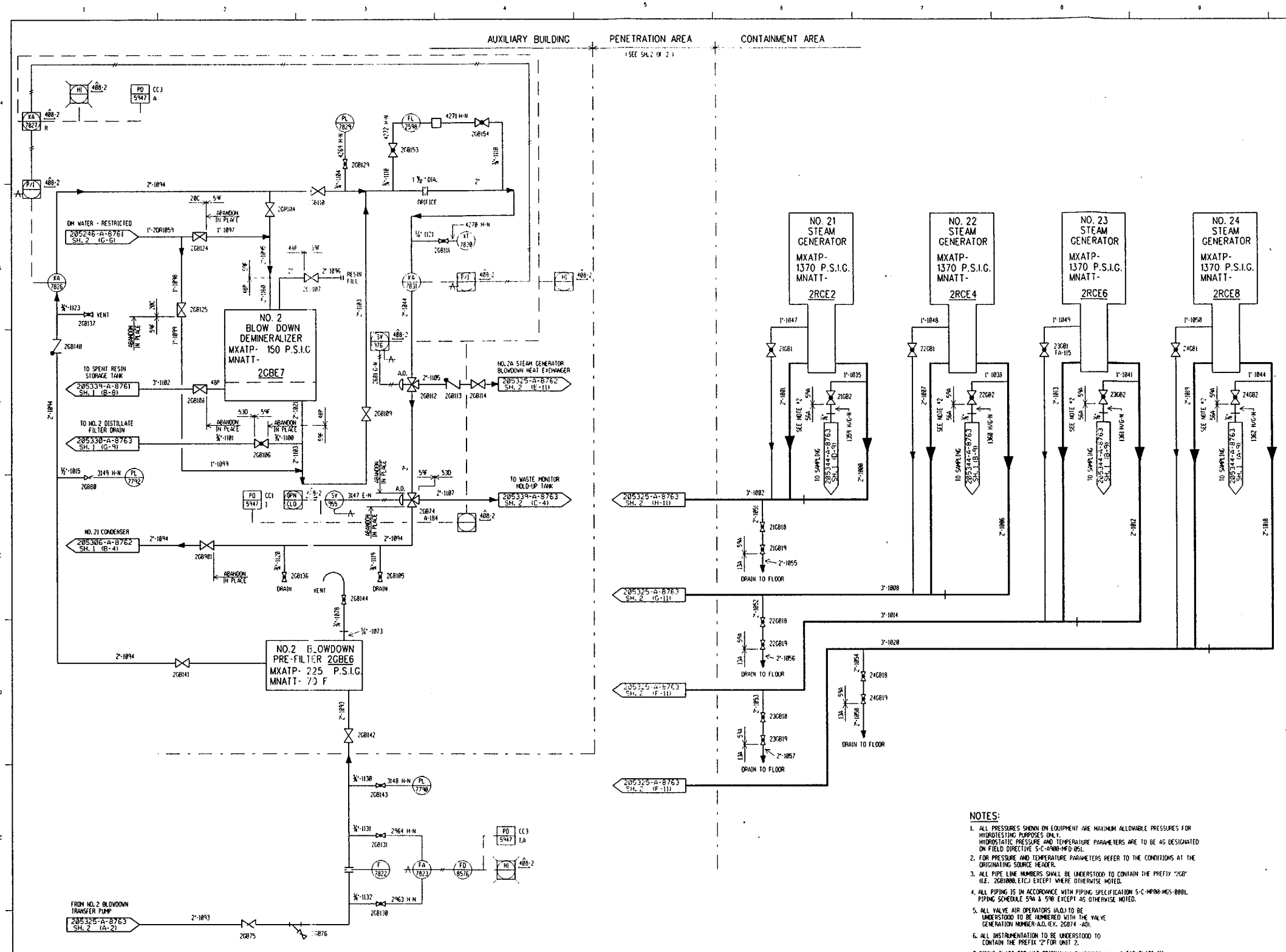

* BOUNDARY	DESIGN CLASSIFICATION			
	SAFETY RELATED	SEISMIC	NUCLEAR	QUALITY ASSUR.
1559A	YES	I	II	YES
1559B	NO	III	NONE	NO
1559C	NO	III	NONE	NO
1559D	NO	III	NONE	NO
1559E	NO	III	NONE	NO
1559F	NO	III	NONE	NO
1520C	NO	III	NONE	NO
1527C	YES	I	III	YES
1548P	NO	II	III	NO
1553D	NO	III	NONE	NO
1513A	NO	III	NONE	NO
1556E	NO	II	II	NO

* IT SHALL BE UNDERSTOOD THAT BOUNDARY NUMBERS SHOWN ON THIS DRAWING SHALL CONTAIN THE PREFIX "25"(I.E. 25444, ETC.) UNLESS OTHERWISE NOTED.

NOTES:

1. ALL PRESSURES SHOWN ON EQUIPMENT ARE MAXIMUM ALLOWABLE PRESSURES FOR HYDROTESTING PURPOSES ONLY. HYDROSTATIC PRESSURE AND TEMPERATURE PARAMETERS ARE TO BE AS DESIGNATED ON FIELD DIRECTIVE S-C-4900-MFD-051.
2. FOR PRESSURE AND TEMPERATURE PARAMETERS REFER TO THE CONDITIONS AT THE ORIGINATING SOURCE HEADER.
3. ALL PIPE LINE NUMBERS SHALL BE UNDERSTOOD TO CONTAIN THE PREFIX "2GB" (I.E. 2GB1000, ETC.) EXCEPT WHERE OTHERWISE NOTED.
4. ALL PIPING IS IN ACCORDANCE WITH PIPING SPECIFICATION S-C-MP00-MDS-0001. PIPING SCHEDULE 5W & 5W EXCEPT AS OTHERWISE NOTED.
5. ALL VALVE AIR OPERATORS (A.O.) TO BE UNDERSTOOD TO BE NUMBERED WITH THE VALVE (GENERATION NUMBER-A.O.) (E.X. 2GB74 -A.O.).
6. ALL INSTRUMENTATION TO BE UNDERSTOOD TO CONTAIN THE PREFIX "2" FOR UNIT 2.
7. PIPING CLASS 53D WAS ORIGINALLY CLASSIFED AS NUCLEAR CLASS III. DCP 2EA-1022 RECLASSIFIES PIPING CLASS 53D TO BE NON-NUCLEAR. ANY MAINTENANCE, REPAIR AND/OR MODIFICATION HENCEFORTH SHALL COMPLY WITH THE REQUIREMENTS OF RECLASSIFIED PIPING CLASS.

NOTE: FOR VALVE MARK NOS. NOT SHOWN ON THIS SHEET, REFER TO MMS.

Ref. Dwg. 205325-A-8763 Sh. 1 - 37

PUBLIC SERVICE ELECTRIC AND GAS COMPANY
SALEM NUCLEAR GENERATING STATION

Steam Generator Drains and Blowdown
Unit 2

Updated FSAR — Sheet 1 of 2

Revision 18, April 26, 2000 — Fig 10.4-18B

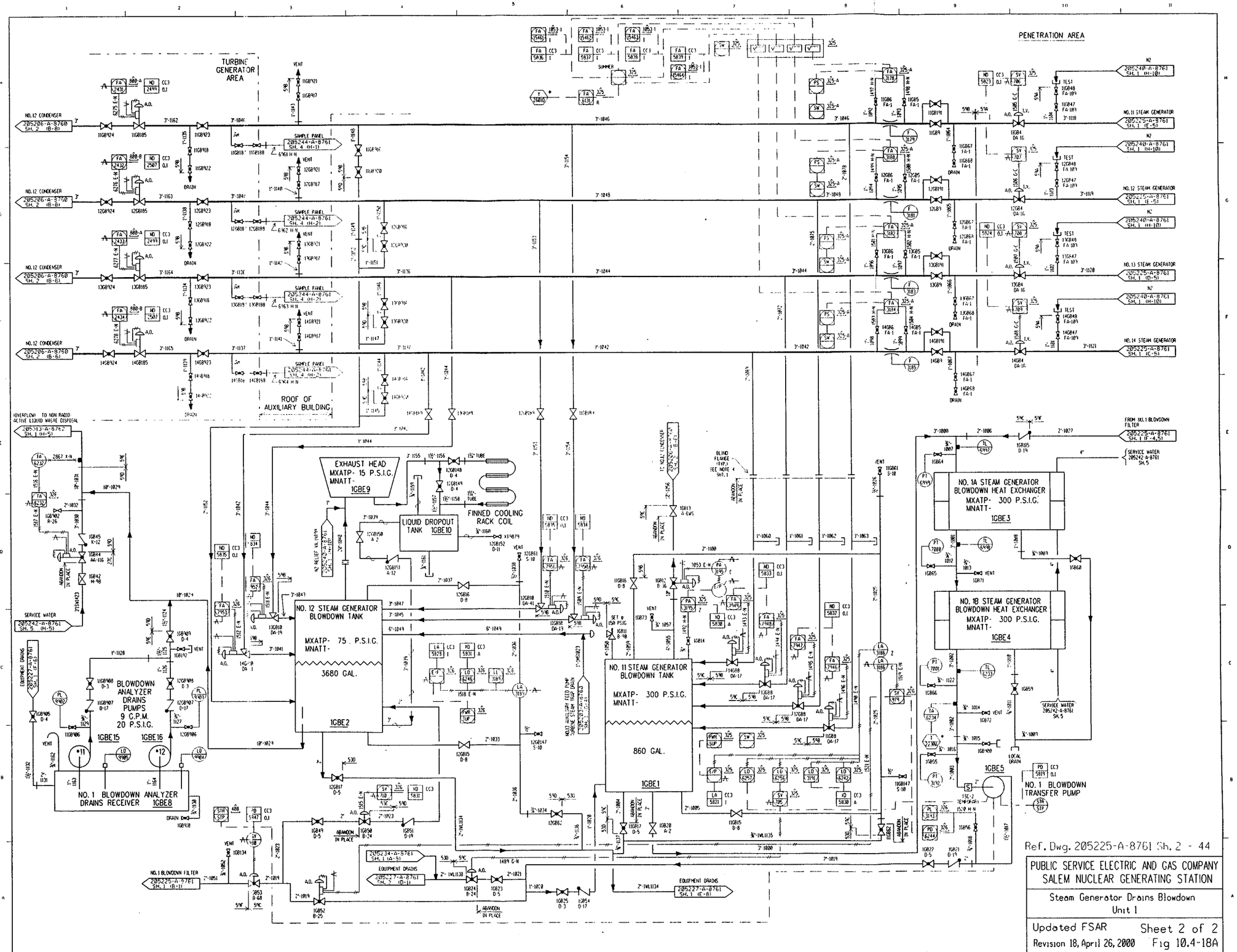

Ref. Dwg. 205225-A-8761 Sh. 2 - 44

PUBLIC SERVICE ELECTRIC AND GAS COMPANY
SALEM NUCLEAR GENERATING STATION

Steam Generator Drains Blowdown
Unit 1

Updated FSAR Sheet 2 of 2
Revision 18, April 26, 2000 Fig 10.4-18A

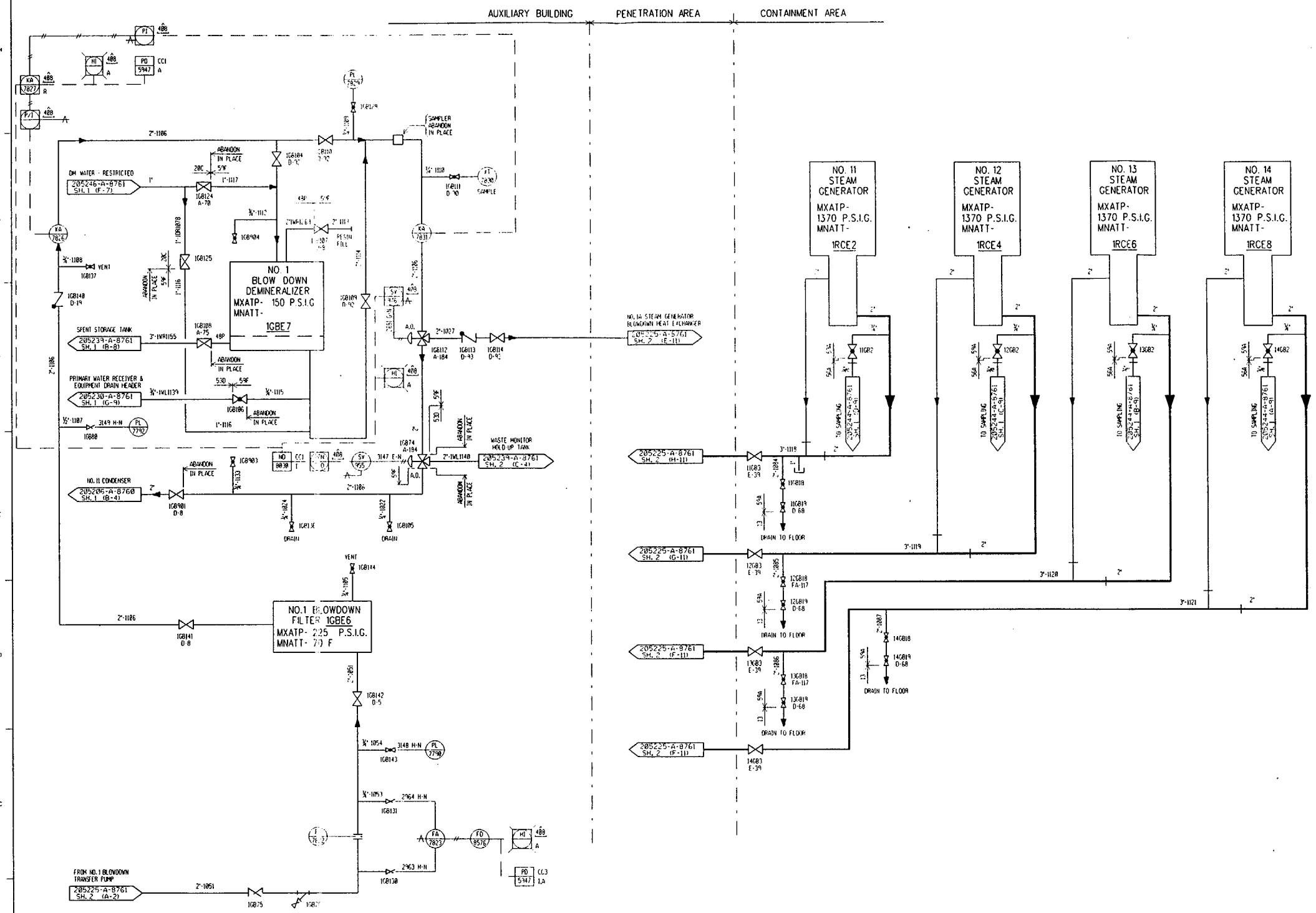

DESIGN				
	CLASSIFICATION			
# BOUNDARY	SAFETY RELATED	SEISMIC	NUCLEAR	QUALITY ASSUR.
1559A	YES	I	II	YES
1559B	NO	III	NONE	NO
1559C	NO	III	NONE	NO
1559D	NO	III	NONE	NO
1559E	NO	III	NONE	NO
1559F	NO	III	NONE	NO
1520C	NO	III	NONE	NO
1527C	YES	I	III	YES
1548P	NO	II	III	NO
1553D	NO	III	NONE	NO
1513A	NO	III	NONE	NO
1556E	NO	II	II	NO

* IT SHALL BE UNDERSTOOD THAT BOUNDARY NUMBERS SHOWN ON THIS DRAWING SHALL CONTAIN THE PREFIX "15" (I.E. 1544A, ETC.) UNLESS OTHERWISE NOTED.

NOTES:

1. ALL PRESSURES SHOWN ON EQUIPMENT ARE MAXIMUM ALLOWABLE PRESSURES FOR HYDROTESTING PURPOSES ONLY. HYDROSTATIC PRESSURE AND TEMPERATURE PARAMETERS ARE TO BE AS DESIGNATED ON FIELD DIRECTIVE S-C-A900-MFD-051.
2. FOR PRESSURE AND TEMPERATURE PARAMETERS REFER TO THE CONDITIONS AT THE ORIGINATING SOURCE HEADER.
3. ALL PIPE LINE NUMBERS SHALL BE UNDERSTOOD TO CONTAIN THE PREFIX "1GB" (I.E. 1GB1000, ETC.) EXCEPT WHERE OTHERWISE NOTED.
4. WITH THE INSERTION OF BLIND FLANGE BLANKS (D-7,8) IN THE FOUR (4) LINES LEADING TO THE NO. 11 STEAM GENERATOR BLOWDOWN TANK, THE NOS. 11-14GB8 VALVES, THE NOS. 1A & 1B HEAT EXCHANGERS, THE NO. 1 BLOWDOWN TRANSFER PUMP AND ALL ASSOCIATED DOWNSTREAM EQUIPMENT ARE NO LONGER IN SERVICE.
5. ALL VALVE AIR OPERATORS (A.O.) TO BE UNDERSTOOD TO BE NUMBERED WITH THE VALVE GENERATION NUMBER-A.O. (EX. 1GB112-A0).
6. ALL INSTRUMENTATION TO BE UNDERSTOOD TO CONTAIN THE PREFIX "1" FOR UNIT 1.
7. PIPING CLASS 53D WAS ORIGINALLY CLASSIFIED AS NUCLEAR CLASS III. DCP 1FA-1028 RECLASSIFIES PIPING CLASS 53D TO BE NON-NUCLEAR. ANY MAINTENANCE, REPAIR AND/OR MODIFICATION HENCEFORTH SHALL COMPLY WITH THE REQUIREMENTS OF RECLASSIFIED PIPING CLASS.

Ref. Dwg. 205225-A-8761 Sh. 1 - 43

PUBLIC SERVICE ELECTRIC AND GAS COMPANY
SALEM NUCLEAR GENERATING STATION

Steam Generator Drains and Blowdown
Unit 1

Updated FSAR
Revision 18, April 26, 2000

Sheet 1 of 2
Fig 10.4-18A

NOTE: FOR VALVE MARK NOS. NOT SHOWN ON THIS SHEET, REFER TO MMS.

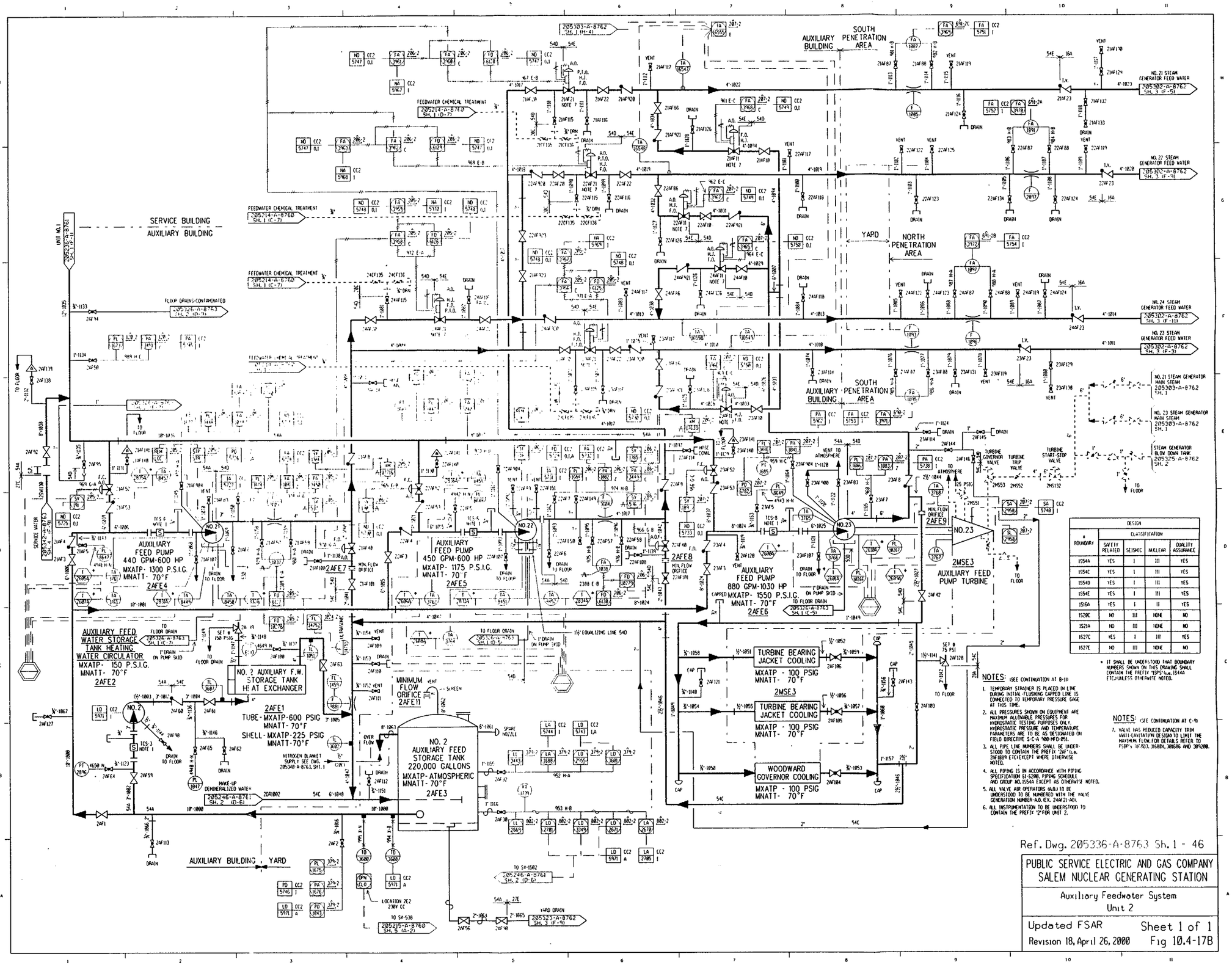

ROUNDARY	DESIGN CLASSIFICATION			
	SAFETY RELATED	SEISMIC	NUCLEAR	QUALITY ASSURANCE
1554A	YES	I	III	YES
1554C	YES	I	III	YES
1554D	YES	I	III	YES
1554E	YES	I	III	YES
1516A	YES	I	II	YES
1520C	NO	III	NONE	NO
1521A	NO	III	NONE	NO
1527C	YES	I	III	YES
1527E	NO	III	NONE	NO

* IT SHALL BE UNDERSTOOD THAT BOUNDARY NUMBERS SHOWN ON THIS DRAWING SHALL CONTAIN THE PREFIX "1SPS" i.e. 1554A ETC.,UNLESS OTHERWISE NOTED.

NOTES: (SEE CONTINUATION AT B-11)

1. TEMPORARY STRAINER IS PLACED IN LINE DURING INITIAL FLUSHING CAPPED LINE IS CONNECTED TO TEMPORARY PRESSURE GAGE AT THIS TIME.
2. ALL PRESSURES SHOWN ON EQUIPMENT ARE MAXIMUM ALLOWABLE PRESSURES FOR HYDROSTATIC TESTING PURPOSES ONLY. HYDROSTATIC PRESSURE AND TEMPERATURE PARAMETERS ARE TO BE AS DESIGNATED ON FIELD DIRECTIVE S-C-A 900-MED-051.
3. ALL PIPE LINE NUMBERS SHALL BE UNDER-STOOD TO CONTAIN THE PREFIX "2AF" i.e. 2AF1089 ETC.(EXCEPT WHERE OTHERWISE NOTED.
4. ALL PIPING IS IN ACCORDANCE WITH PIPING SPECIFICATION G1-62010, PIPING SCHEDULE AND GROUP NO.1554A EXCEPT AS OTHERWISE NOTED.
5. ALL VALVE AIR OPERATORS (A.O.) TO BE UNDERSTOOD TO BE NUMBERED WITH THE VALVE GENERATION NUMBER-A.O. (EX. 2AF21-AO).
6. ALL INSTRUMENTATION TO BE UNDERSTOOD TO CONTAIN THE PREFIX "2" FOR UNIT 2.

NOTES: (SEE CONTINUATION AT C-9)

7. VALVE HAS REDUCED CAPACITY TRIM (ANTI-CAVITATION DESIGN TO LIMIT THE MAXIMUM FLOW FOR DETAILS REFER TO PSEG's W.R.O.'s 316824, 301686 AND 309200.

Ref. Dwg. 205336-A-8763 Sh. 1 - 46

PUBLIC SERVICE ELECTRIC AND GAS COMPANY
SALEM NUCLEAR GENERATING STATION

Auxiliary Feedwater System
Unit 2

Updated FSAR — Sheet 1 of 1
Revision 18, April 26, 2000 — Fig 10.4-17B

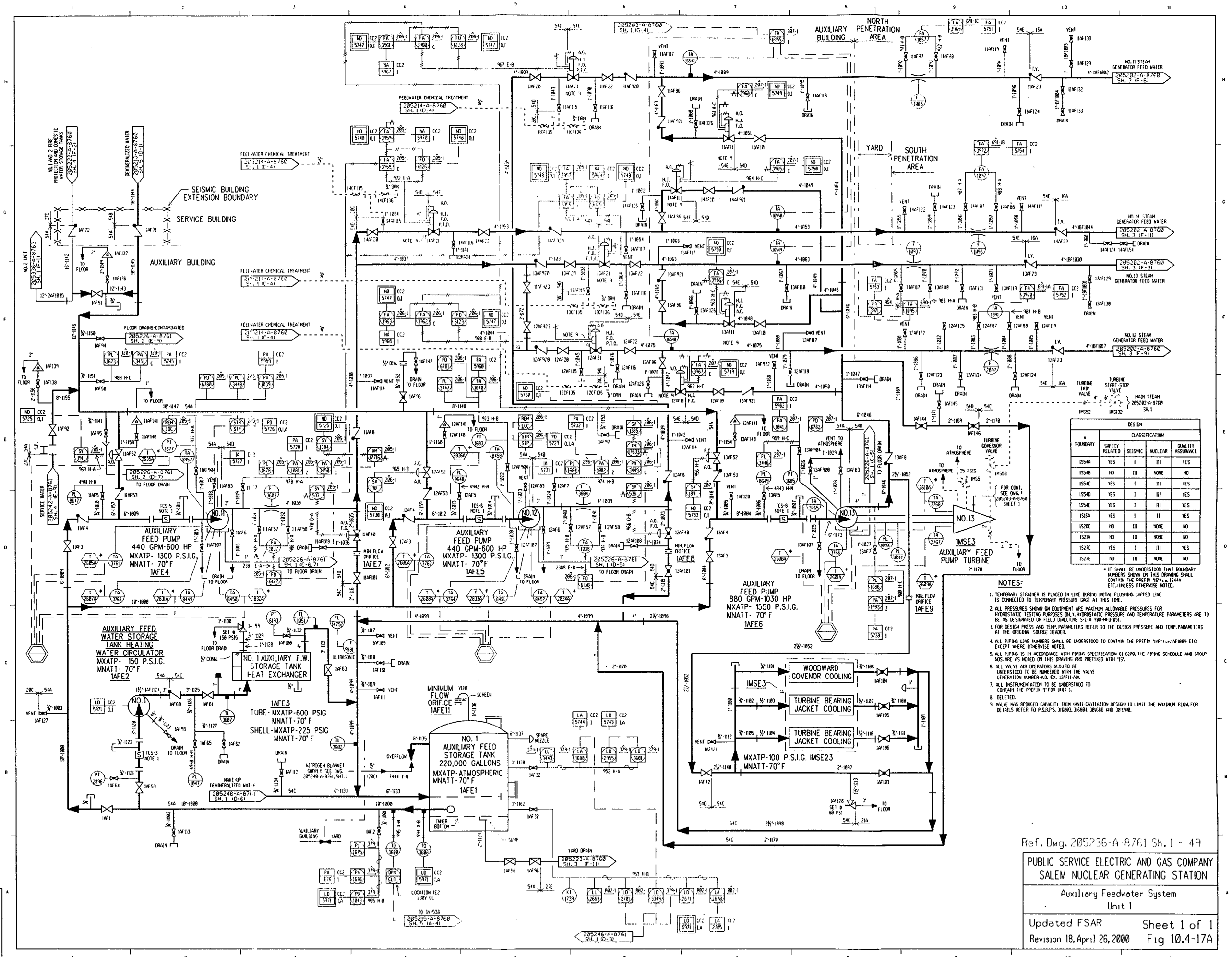

DESIGN BOUNDARY	CLASSIFICATION: SAFETY RELATED	SEISMIC	NUCLEAR	QUALITY ASSURANCE
1554A	YES	I	III	YES
1554B	NO	III	NONE	NO
1554C	YES	I	III	YES
1554D	YES	I	III	YES
1554E	YES	I	III	YES
1516A	YES	I	II	YES
1520C	NO	III	NONE	NO
1521A	NO	III	NONE	NO
1527C	YES	I	III	YES
1527E	NO	III	NONE	NO

* IT SHALL BE UNDERSTOOD THAT BOUNDARY NUMBERS SHOWN ON THIS DRAWING SHALL CONTAIN THE PREFIX "15" i.e. 1554A ETC. UNLESS OTHERWISE NOTED.

NOTES:

1. TEMPORARY STRAINER IS PLACED IN LINE DURING INITIAL FLUSHING. CAPPED LINE IS CONNECTED TO TEMPORARY PRESSURE GAGE AT THIS TIME.
2. ALL PRESSURES SHOWN ON EQUIPMENT ARE MAXIMUM ALLOWABLE PRESSURES FOR HYDROSTATIC TESTING PURPOSES ONLY, HYDROSTATIC PRESSURE AND TEMPERATURE PARAMETERS ARE TO BE AS DESIGNATED ON FIELD DIRECTIVE S-C-A 980-MFD-851.
3. FOR DESIGN PRESS AND TEMP. PARAMETERS REFER TO THE DESIGN PRESSURE AND TEMP. PARAMETERS AT THE ORIGINAL SOURCE HEADER.
4. ALL PIPING LINE NUMBERS SHALL BE UNDERSTOOD TO CONTAIN THE PREFIX "1AF" (i.e. 1AF1089 ETC) EXCEPT WHERE OTHERWISE NOTED.
5. ALL PIPING IS IN ACCORDANCE WITH PIPING SPECIFICATION 61-6200. THE PIPING SCHEDULE AND GROUP NOS. ARE AS NOTED ON THIS DRAWING AND PREFIXED WITH "15".
6. ALL VALVE AIR OPERATORS (A.O.) TO BE UNDERSTOOD TO BE NUMBERED WITH THE VALVE GENERATION NUMBER (A.O. EX. 13AF11-A01).
7. ALL INSTRUMENTATION TO BE UNDERSTOOD TO CONTAIN THE PREFIX "1" FOR UNIT 1.
8. DELETED.
9. VALVE HAS REDUCED CAPACITY TRIM (ANTI CAVITATION DESIGN) TO LIMIT THE MAXIMUM FLOW. FOR DETAILS REFER TO P.S.E.&G. 316803, 316804, 301586 AND 301590.

Ref. Dwg. 205236-A 8761 Sh. 1 - 49

PUBLIC SERVICE ELECTRIC AND GAS COMPANY
SALEM NUCLEAR GENERATING STATION

Auxiliary Feedwater System
Unit 1

Updated FSAR
Revision 18, April 26, 2000

Sheet 1 of 1
Fig 10.4-17A

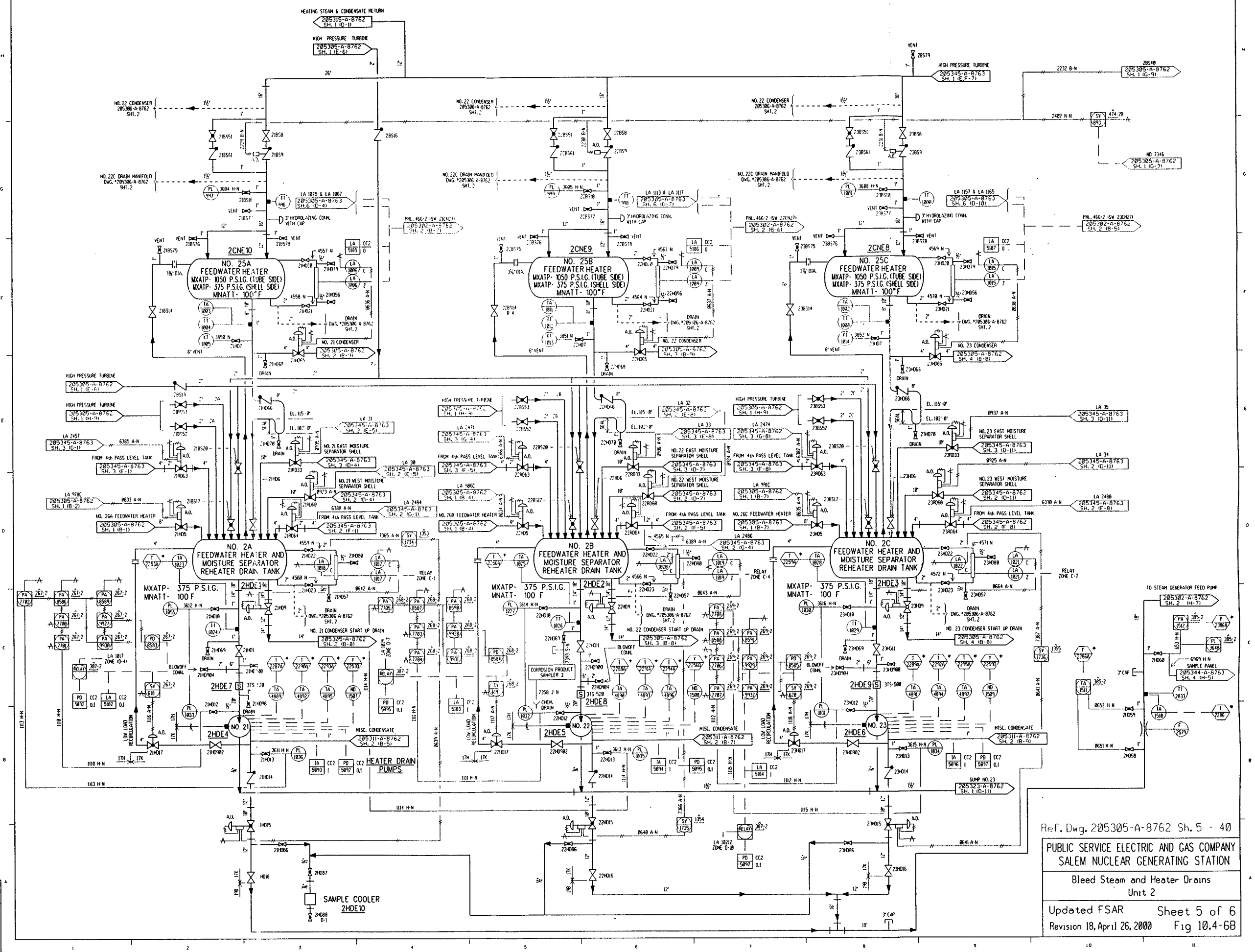

NOTE: FOR VALVE MARK NOS. NOT SHOWN ON THIS SHEET, REFER TO VMNS.

PUBLIC SERVICE ELECTRIC AND GAS COMPANY
SALEM NUCLEAR GENERATING STATION

Bleed Steam and Heater Drains
Unit 2

Updated FSAR — Sheet 5 of 6

Revision 18, April 26, 2000 — Fig 10.4-6B

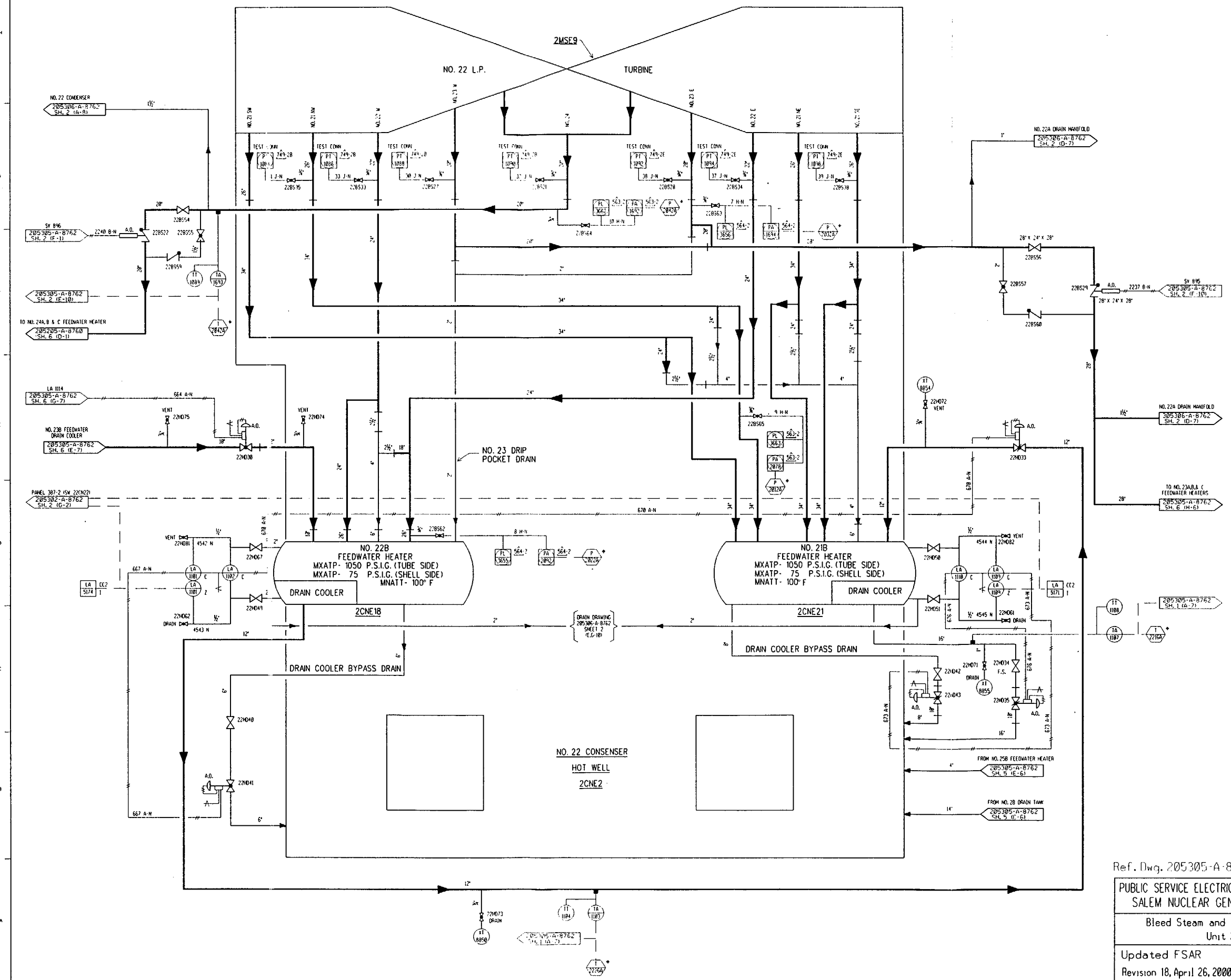

NOTE: FOR VALVE MARK NOS. NOT SHOWN ON THIS SHEET, REFER TO VMNS.

Ref. Dwg. 205305-A-8762 Sh. 3 - 26

PUBLIC SERVICE ELECTRIC AND GAS COMPANY
SALEM NUCLEAR GENERATING STATION

Bleed Steam and Heater Drains
Unit 2

Updated FSAR Sheet 3 of 6
Revision 18, April 26, 2000 Fig 10.4-6B

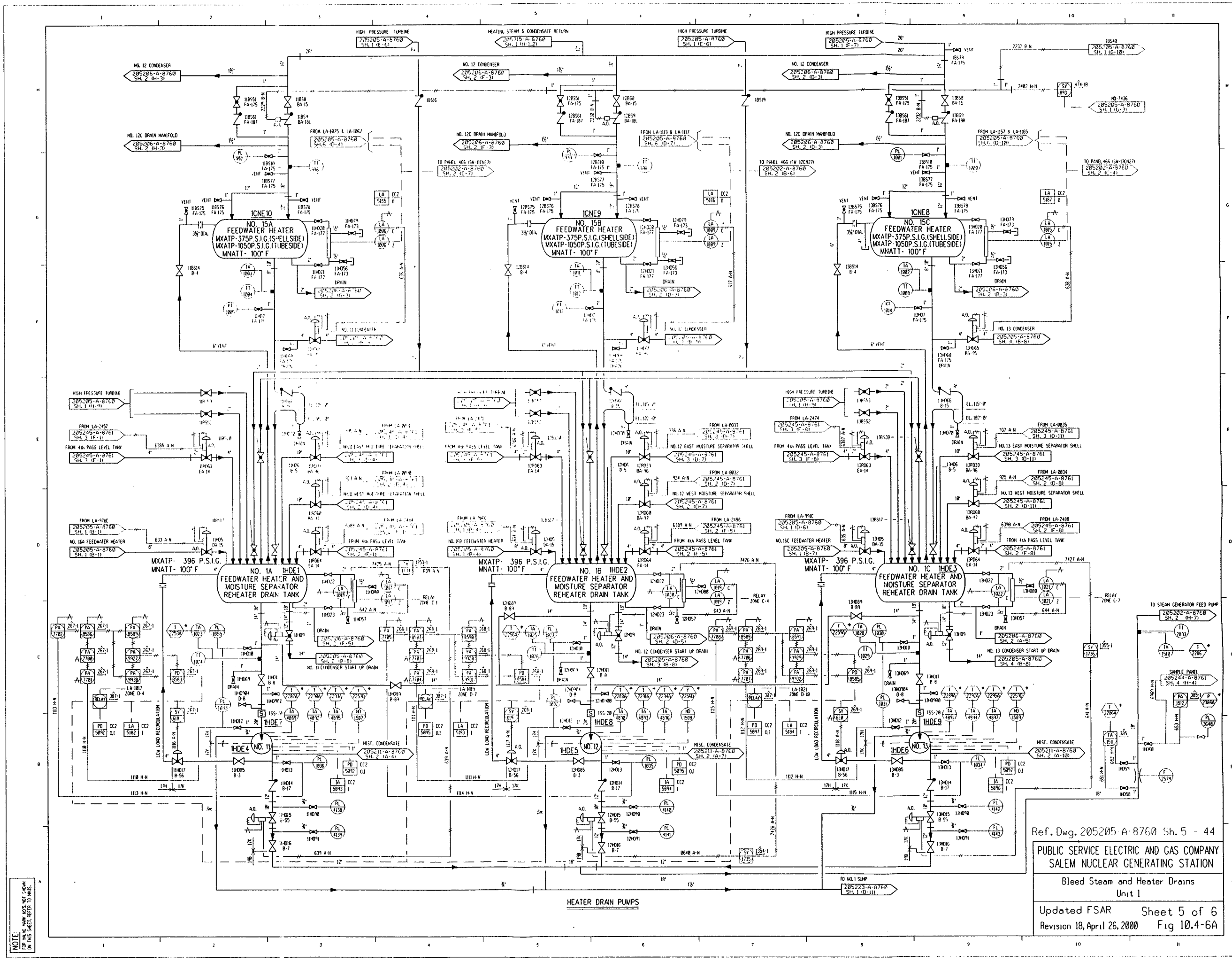

Ref. Dwg. 205205-A-8760 Sh. 5 - 44

PUBLIC SERVICE ELECTRIC AND GAS COMPANY
SALEM NUCLEAR GENERATING STATION

Bleed Steam and Heater Drains
Unit 1

Updated FSAR Sheet 5 of 6
Revision 18, April 26, 2000 Fig 10.4-6A

NOTE: FOR VALVE MARK NOTS, NOT SHOWN ON THIS SHEET, REFER TO MMS.

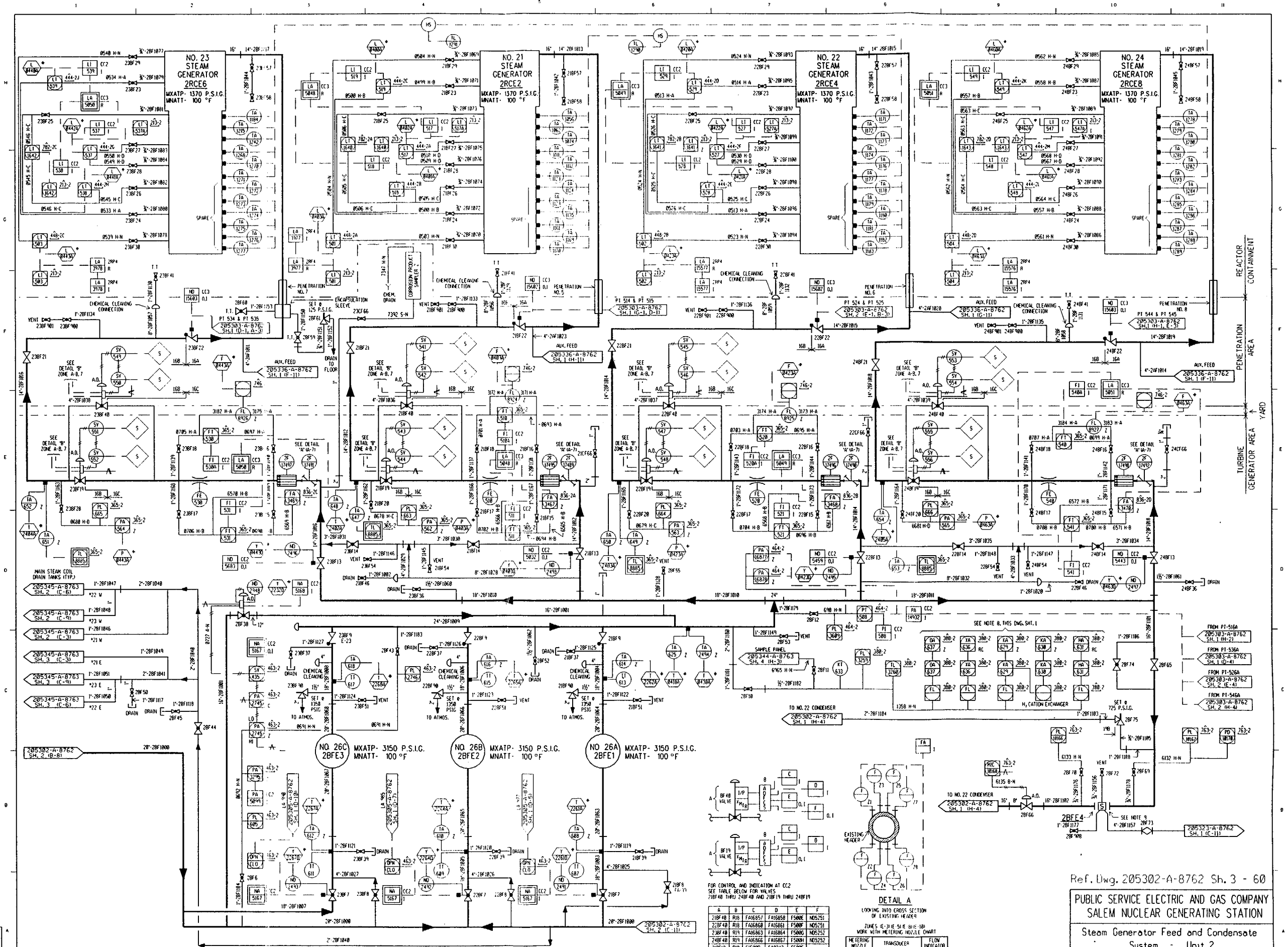

Ref. Dwg. 205302-A-8762 Sh. 3 - 60

PUBLIC SERVICE ELECTRIC AND GAS COMPANY
SALEM NUCLEAR GENERATING STATION

Steam Generator Feed and Condensate System - Unit 2

Updated FSAR Sheet 3 of 3

Revision 18, April 26, 2000 Fig 10.4-5B

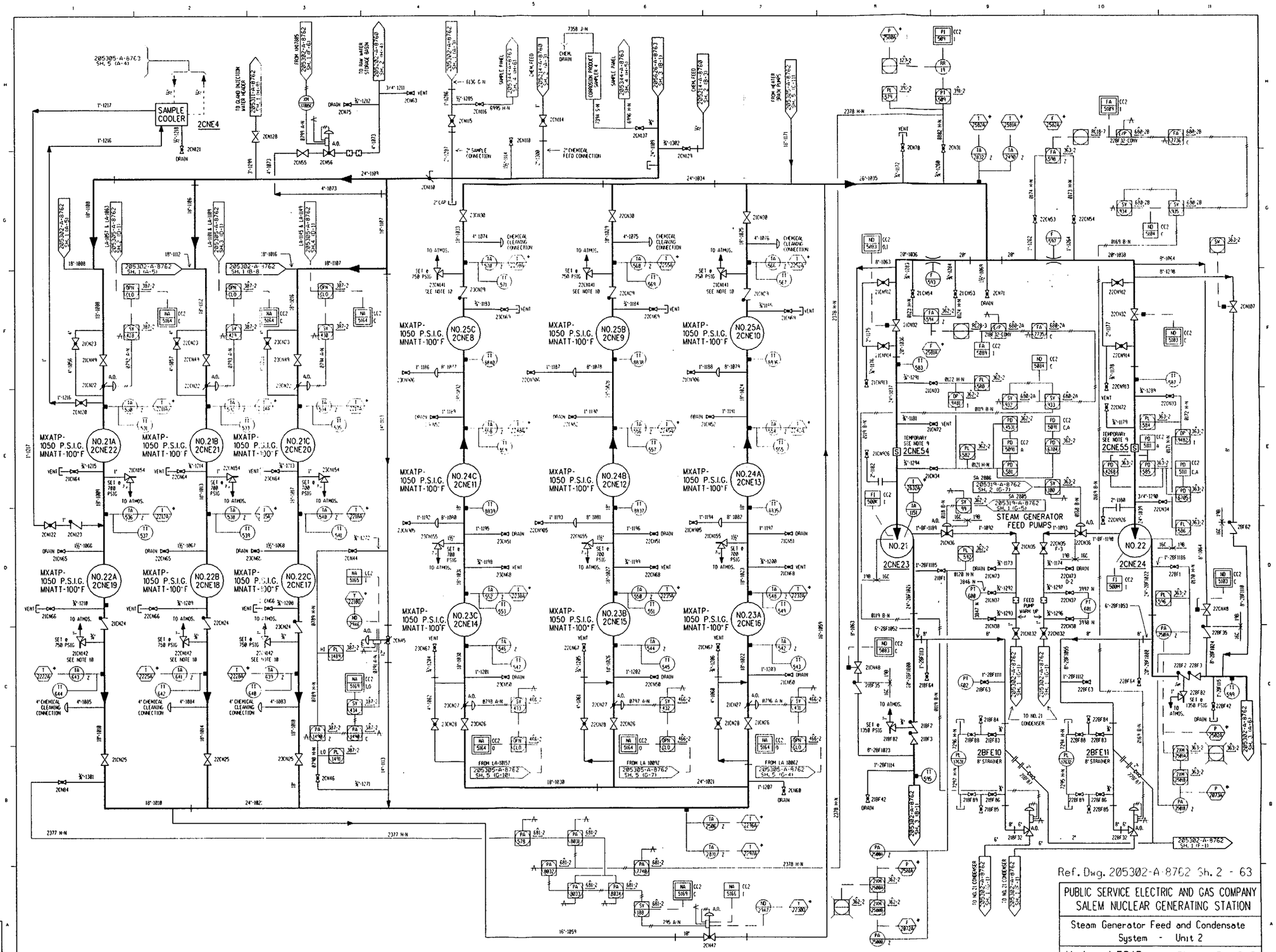

LOW PRESSURE FEEDWATER HEATERS

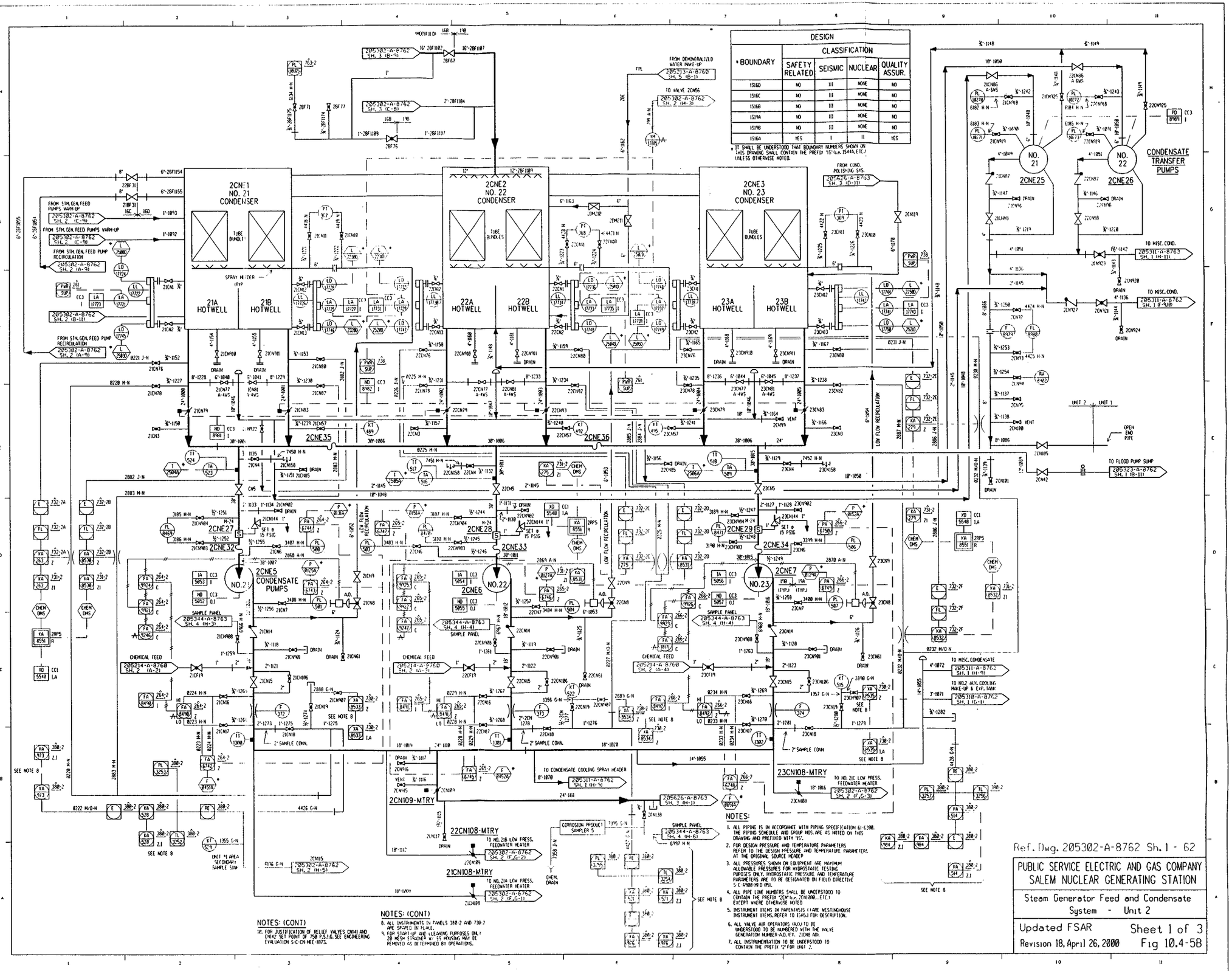

DESIGN				
* BOUNDARY	CLASSIFICATION			
	SAFETY RELATED	SEISMIC	NUCLEAR	QUALITY ASSUR.
1S16D	NO	III	NONE	NO
1S16C	NO	III	NONE	NO
1S16B	NO	III	NONE	NO
1S19A	NO	III	NONE	NO
1S19B	NO	III	NONE	NO
1S16A	YES	I	II	YES

* IT SHALL BE UNDERSTOOD THAT BOUNDARY NUMBERS SHOWN ON THIS DRAWING SHALL CONTAIN THE PREFIX "1S" (i.e. 1S44A, ETC.) UNLESS OTHERWISE NOTED.

NOTES:

1. ALL PIPING IS IN ACCORDANCE WITH PIPING SPECIFICATION 61-6200. THE PIPING SCHEDULE AND GROUP NOS. ARE AS NOTED ON THIS DRAWING AND PREFIXED WITH "1S".
2. FOR DESIGN PRESSURE AND TEMPERATURE PARAMETERS REFER TO THE DESIGN PRESSURE AND TEMPERATURE PARAMETERS AT THE ORIGINAL SOURCE HEADER.
3. ALL PRESSURES SHOWN ON EQUIPMENT ARE MAXIMUM ALLOWABLE PRESSURES FOR HYDROSTATIC TESTING PURPOSES ONLY. HYDROSTATIC PRESSURE AND TEMPERATURE PARAMETERS ARE TO BE DESIGNATED ON FIELD DIRECTIVE S-C-A900-M-D-051.
4. ALL PIPE LINE NUMBERS SHALL BE UNDERSTOOD TO CONTAIN THE PREFIX "2CN" (i.e. 2CN100B...ETC.) EXCEPT WHERE OTHERWISE NOTED.
5. INSTRUMENT ITEMS IN PARENTHESIS (1) ARE WESTINGHOUSE INSTRUMENT ITEMS. REFER TO 1S45A FOR DESCRIPTION.
6. ALL VALVE AIR OPERATORS (A.O.) TO BE UNDERSTOOD TO BE NUMBERED WITH THE VALVE GENERATION NUMBER-A.O. (E.G. 2CN08 A.O.).
7. ALL INSTRUMENTATION TO BE UNDERSTOOD TO CONTAIN THE PREFIX "2" FOR UNIT 2.

NOTES: (CONT)

10. FOR JUSTIFICATION OF RELIEF VALVES CN141 AND CN142 SET POINT OF 250 P.S.I.G. SEE ENGINEERING EVALUATION S-C-CH-MEE-1073.

NOTES: (CONT)

8. ALL INSTRUMENTS IN PANELS 380-2 AND 730-2 ARE SPARED IN PLACE.
9. FOR START-UP AND CLEANING PURPOSES ONLY 20 MESH STRAINER W/ SS HOUSING MAY BE REMOVED AS DETERMINED BY OPERATIONS.

NOTE: FOR MAKE-UP NOS. NOT SHOWN ON THIS SHEET, REFER TO SAP.

Ref. Dwg. 205302-A-8762 Sh. 1 - 62

PUBLIC SERVICE ELECTRIC AND GAS COMPANY
SALEM NUCLEAR GENERATING STATION

Steam Generator Feed and Condensate System - Unit 2

Updated FSAR
Revision 18, April 26, 2000

Sheet 1 of 3
Fig 10.4-5B

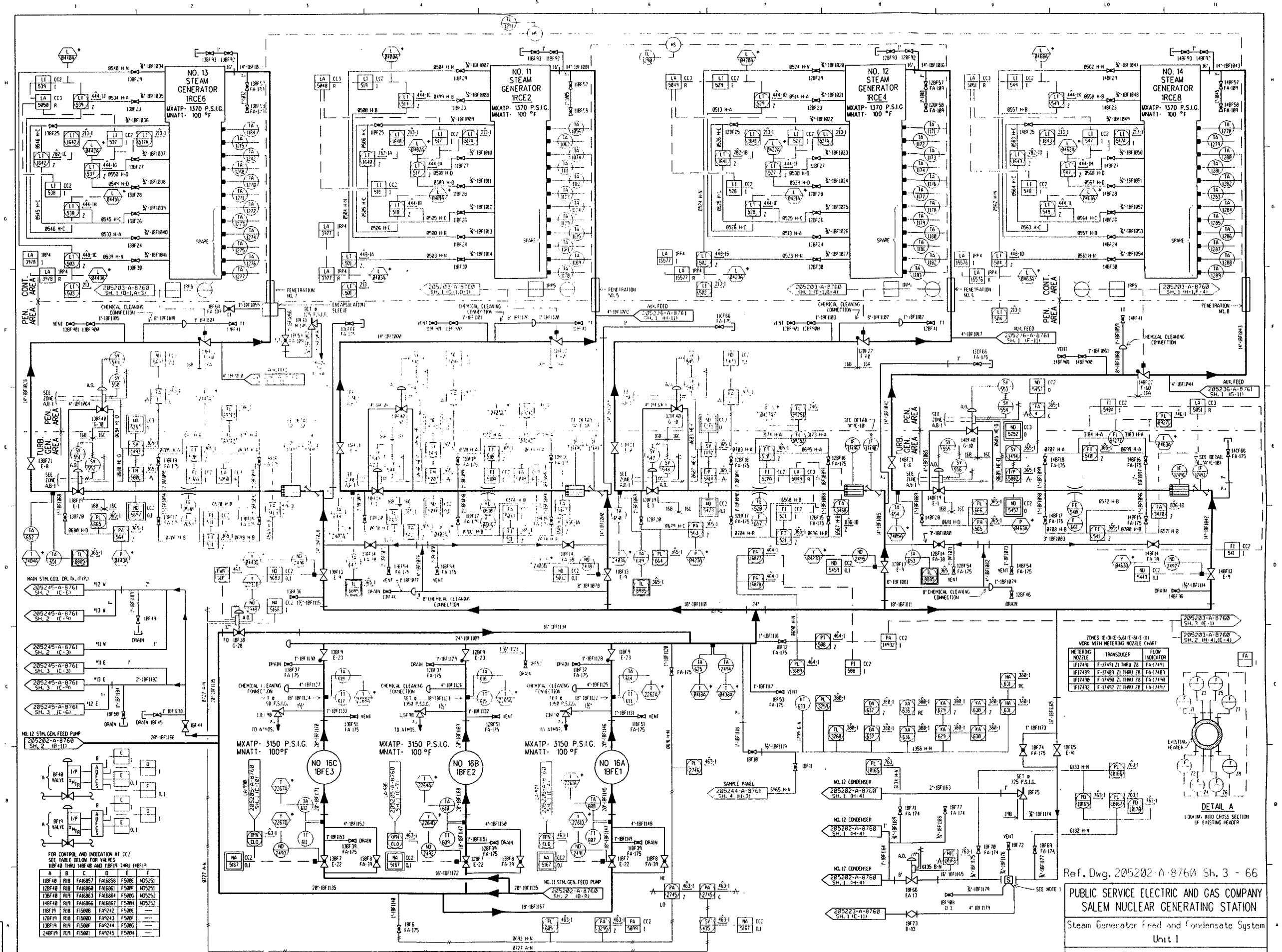

HIGH PRESSURE FEEDWATER HEATERS

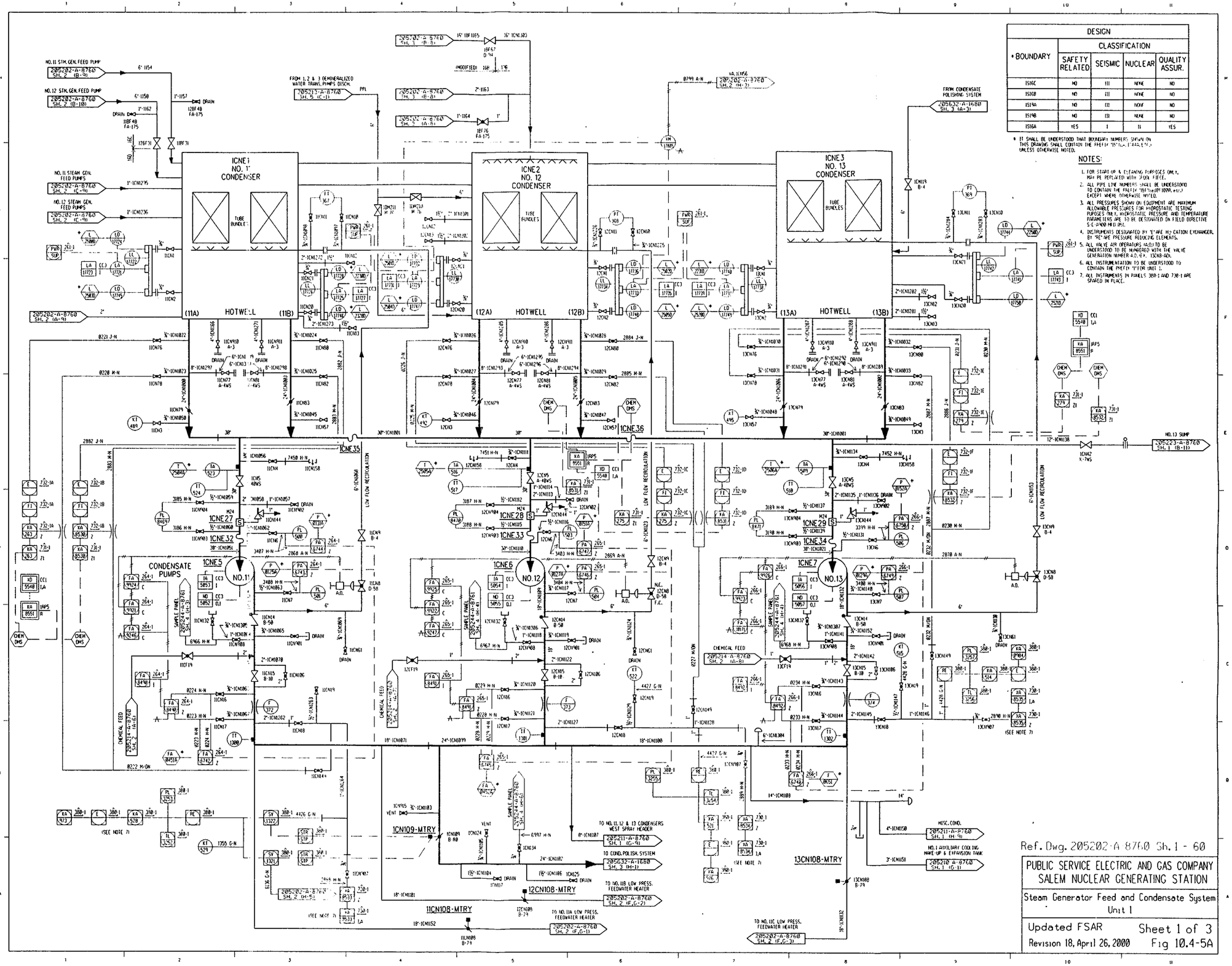

DESIGN				
• BOUNDARY	CLASSIFICATION			
	SAFETY RELATED	SEISMIC	NUCLEAR	QUALITY ASSUR.
1S16C	NO	III	NONE	NO
1S16B	NO	III	NONE	NO
1S19A	NO	III	NONE	NO
1S19B	NO	III	NONE	NO
1S16A	YES	I	II	YES

• IT SHALL BE UNDERSTOOD THAT BOUNDARY NUMBERS SHOWN ON THIS DRAWING SHALL CONTAIN THE PREFIX "1S16A, 1S16B, ETC." UNLESS OTHERWISE NOTED.

NOTES:

1. FOR START-UP & CLEANING PURPOSES ONLY, MAY BE REPLACED WITH SPOOL PIECE.
2. ALL PIPE LINE NUMBERS SHALL BE UNDERSTOOD TO CONTAIN THE PREFIX "1S16A, 1S16B, ETC." EXCEPT WHERE OTHERWISE NOTED.
3. ALL PRESSURES SHOWN ON EQUIPMENT ARE MAXIMUM ALLOWABLE PRESSURES FOR HYDROSTATIC TESTING PURPOSES ONLY. HYDROSTATIC PRESSURE AND TEMPERATURE PARAMETERS ARE TO BE DESIGNATED ON FIELD DIRECTIVE S-C-A900 MFD 051.
4. INSTRUMENTS DESIGNATED BY "E" ARE H_2 CATION EXCHANGER, BY "RE" ARE PRESSURE REDUCING ELEMENTS.
5. ALL VALVE AIR OPERATORS (A.O.) TO BE UNDERSTOOD TO BE NUMBERED WITH THE VALVE GENERATION NUMBER A.O.-EX. 13CN8-AO1.
6. ALL INSTRUMENTATION TO BE UNDERSTOOD TO CONTAIN THE PREFIX "1" FOR UNIT 1.
7. ALL INSTRUMENTS IN PANELS 380-1 AND 730-1 ARE SPARED IN PLACE.

Ref. Dwg. 205202-A-8760 Sh. 1 - 60

PUBLIC SERVICE ELECTRIC AND GAS COMPANY
SALEM NUCLEAR GENERATING STATION

Steam Generator Feed and Condensate System
Unit 1

Updated FSAR
Revision 18, April 26, 2000

Sheet 1 of 3
Fig 10.4-5A

NOTE:
FOR VALVE MARK NOS. NOT SHOWN ON THIS SHEET, REFER TO SAP.

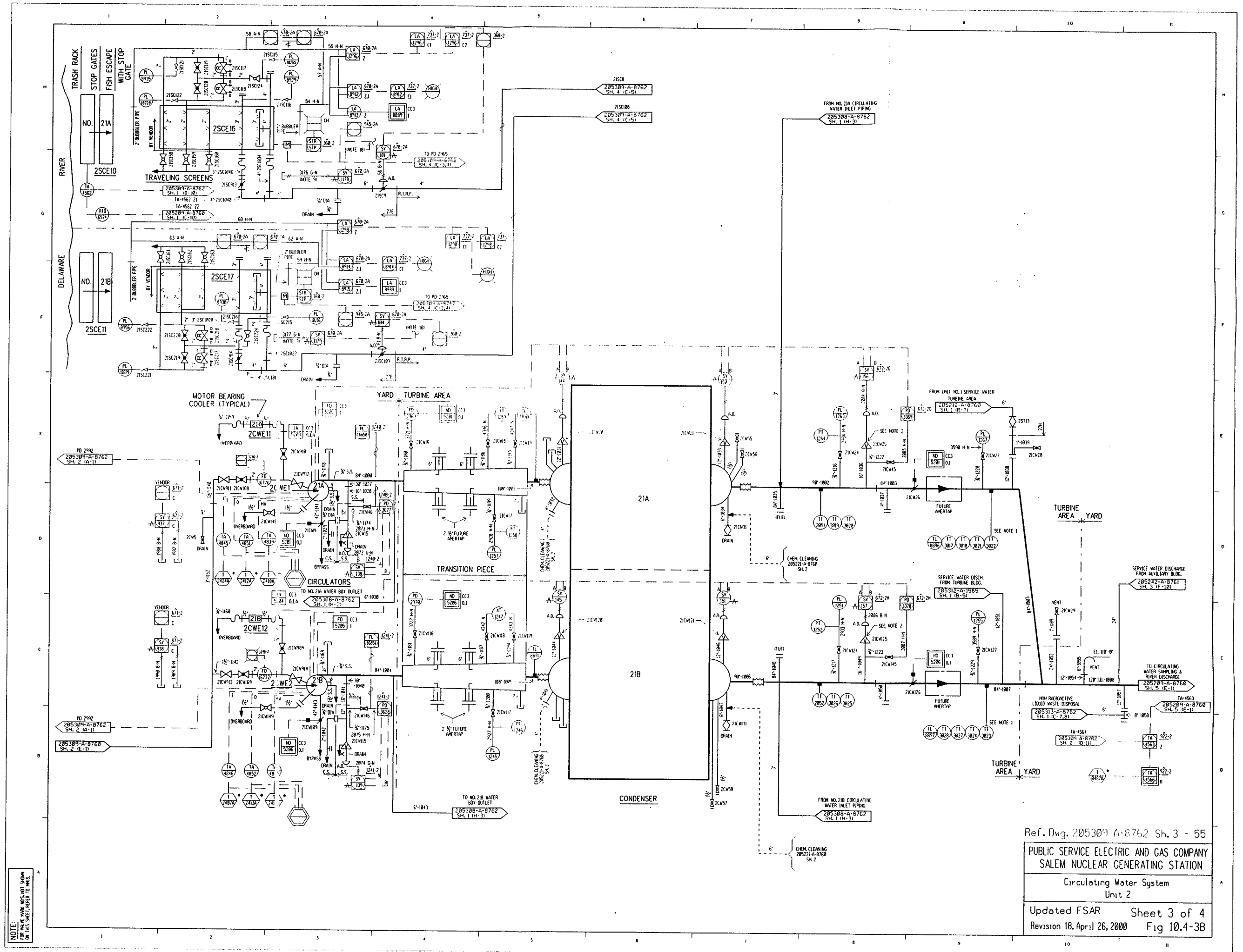

Ref. Dwg. 205309-A-8762 Sh. 3 - 55

PUBLIC SERVICE ELECTRIC AND GAS COMPANY
SALEM NUCLEAR GENERATING STATION

Circulating Water System
Unit 2

Updated FSAR Sheet 3 of 4
Revision 18, April 26, 2000 Fig 10.4-3B

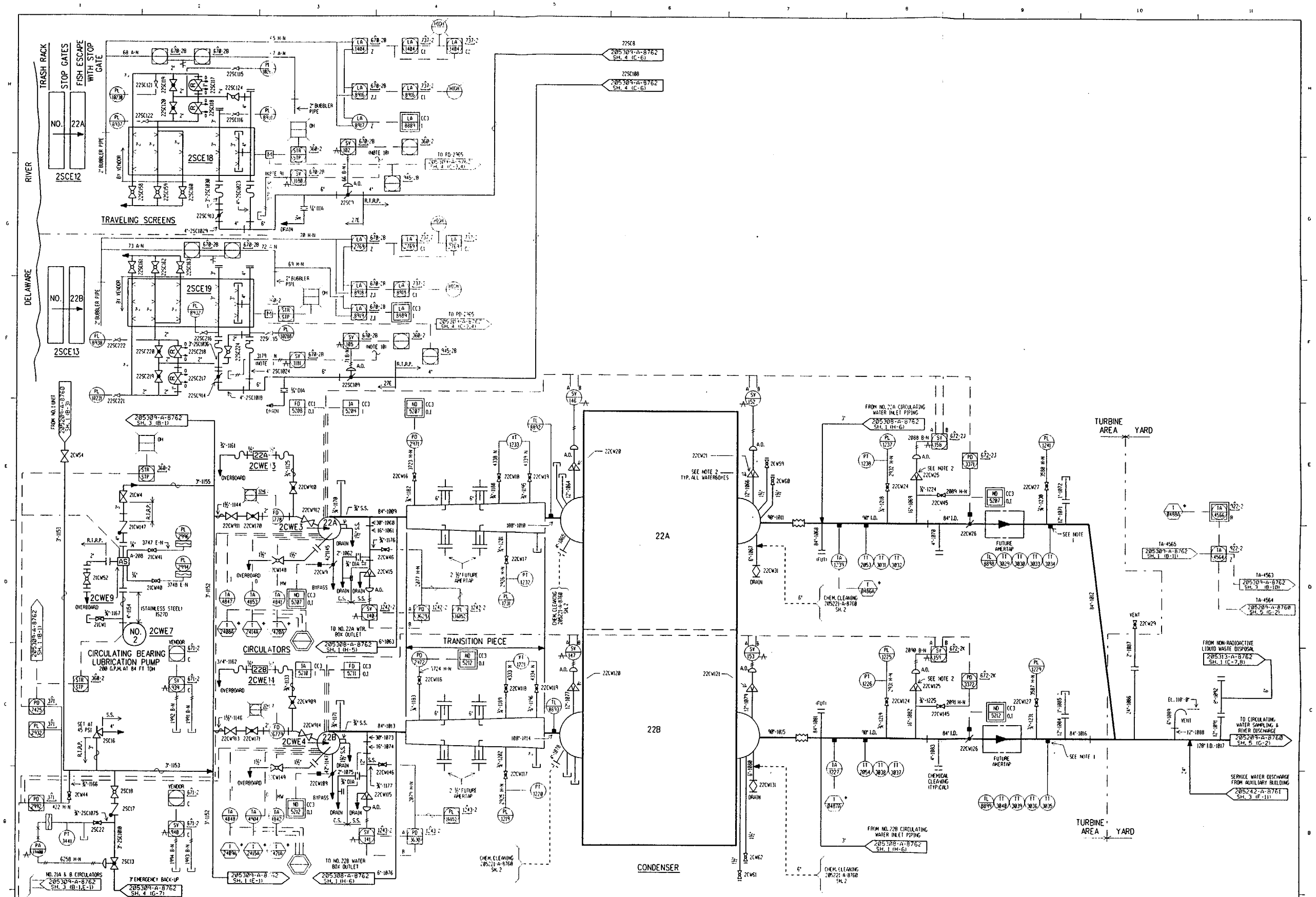

NOTE:
FOR HIGH & LOW WTR. NOT SHOWN
REFER TO HWS

Ref. Dwg. 205309-A-8762 Sh. 2 - 65

PUBLIC SERVICE ELECTRIC AND GAS COMPANY
SALEM NUCLEAR GENERATING STATION

Circulating Water System
Unit 2

Updated FSAR Sheet 2 of 4
Revision 18, April 26, 2000 Fig 10.4-3B

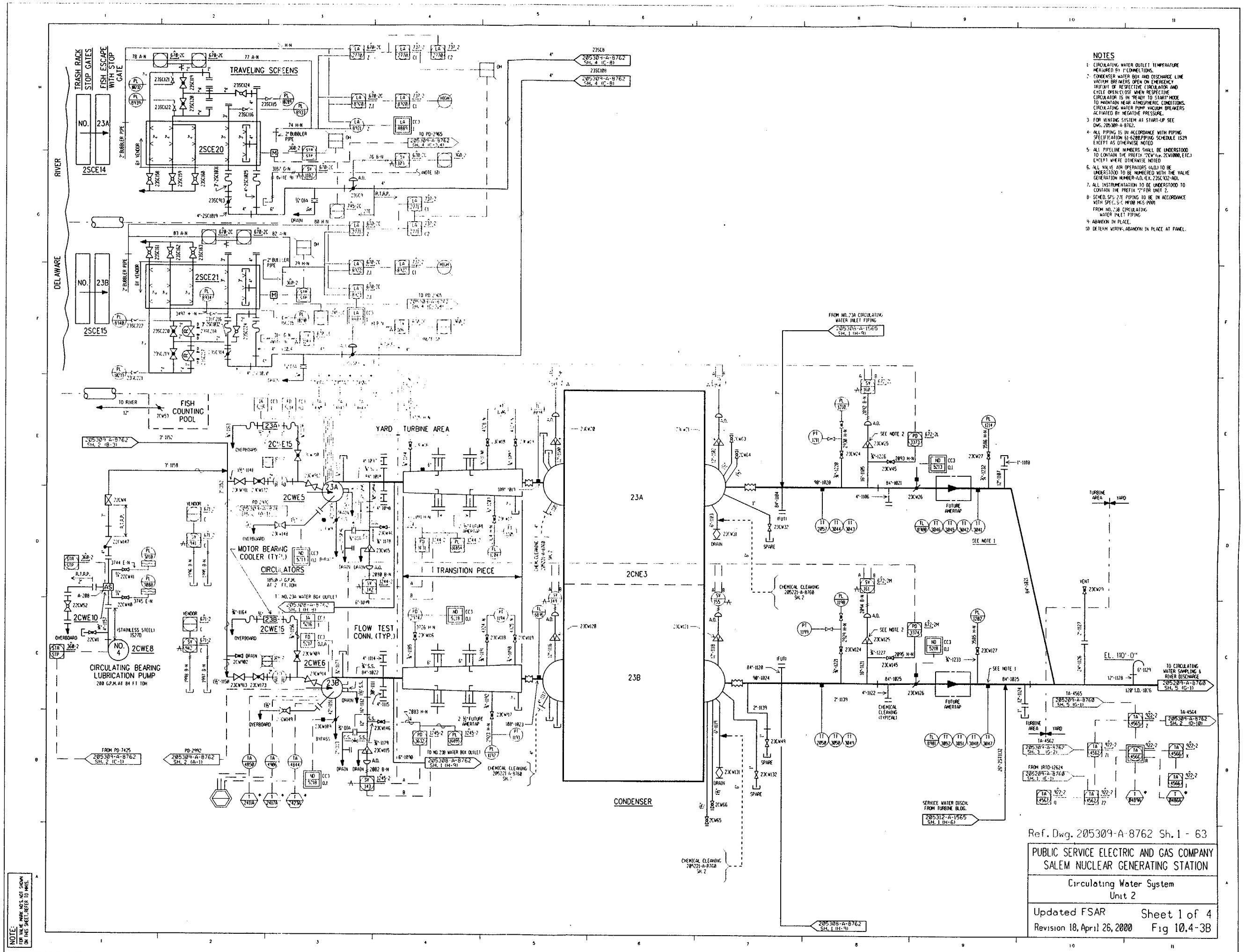

NOTES

1. CIRCULATING WATER OUTLET TEMPERATURE MEASURED BY 1" CONNECTIONS.
2. CONDENSER WATER BOX AND DISCHARGE LINE VACUUM BREAKERS OPEN ON EMERGENCY TRIPOUT OF RESPECTIVE CIRCULATOR AND CYCLE OPEN/CLOSE WHEN RESPECTIVE CIRCULATOR IS IN 'READY TO START' MODE TO MAINTAIN NEAR ATMOSPHERIC CONDITIONS. CIRCULATING WATER PUMP VACUUM BREAKERS ACTUATED BY NEGATIVE PRESSURE.
3. FOR VENTING SYSTEM AT START-UP SEE DWG. 205308-A-8762.
4. ALL PIPING IS IN ACCORDANCE WITH PIPING SPECIFICATION 61-6288 PIPING SCHEDULE 1539 EXCEPT AS OTHERWISE NOTED
5. ALL PIPELINE NUMBERS SHALL BE UNDERSTOOD TO CONTAIN THE PREFIX "2CW" (i.e. 2CW1000, ETC.) EXCEPT WHERE OTHERWISE NOTED
6. ALL VALVE AIR OPERATORS (A.O.) TO BE UNDERSTOOD TO BE NUMBERED WITH THE VALVE GENERATION NUMBER-A.O. (E.X. 23SC932-AO).
7. ALL INSTRUMENTATION TO BE UNDERSTOOD TO CONTAIN THE PREFIX "2" FOR UNIT 2.
8. SCHED. SPS 27E PIPING TO BE IN ACCORDANCE WITH SPEC. S-C MP00 MGS-P001
   FROM NO. 23B CIRCULATING WATER INLET PIPING
9. ABANDON IN PLACE.
10. DETERM WIRING ABANDON IN PLACE AT PANEL.

Ref. Dwg. 205309-A-8762 Sh. 1 - 63

PUBLIC SERVICE ELECTRIC AND GAS COMPANY
SALEM NUCLEAR GENERATING STATION

Circulating Water System
Unit 2

Updated FSAR
Revision 18, April 26, 2000

Sheet 1 of 4
Fig 10.4-3B

NOTE: FOR VALVE MARK NO'S NOT SHOWN ON THIS SHEET, REFER TO MMIS.

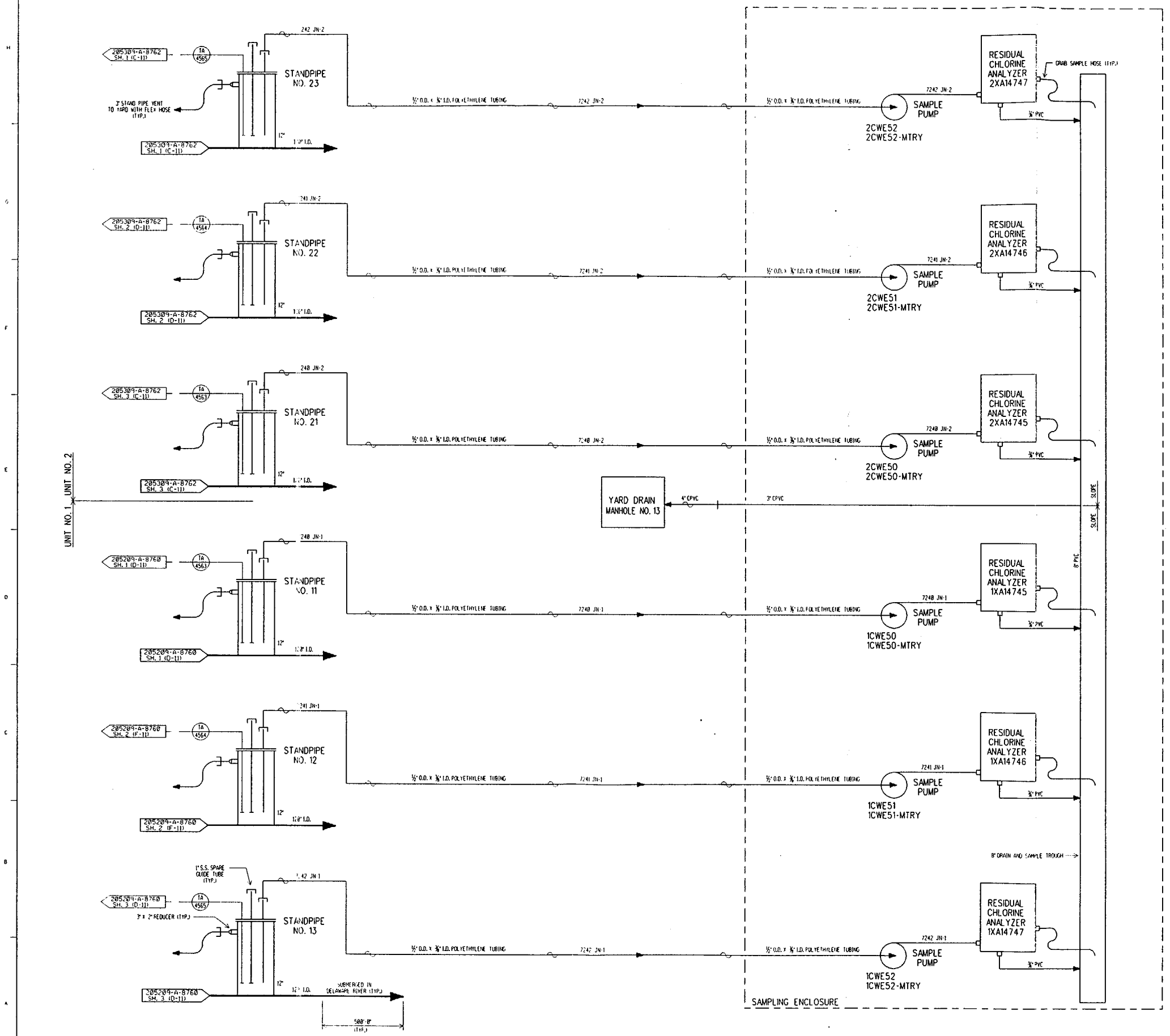

GENERAL NOTES

1. FOR STANDARD FLUID SYMBOLS AND LEGEND SEE DRAWING NO. 680658-A-8727
2. ALL VALVES ARE SHOWN NORMALLY OPEN UNLESS INDICATED OTHERWISE

Ref. Dwg. 205209-A-8760 Sh. 5 - 09

PUBLIC SERVICE ELECTRIC AND GAS COMPANY
SALEM NUCLEAR GENERATING STATION

Circulating Water System
Unit 1

Updated FSAR Sheet 5 of 5
Revision 18, April 26, 2000 Fig 10.4-3A

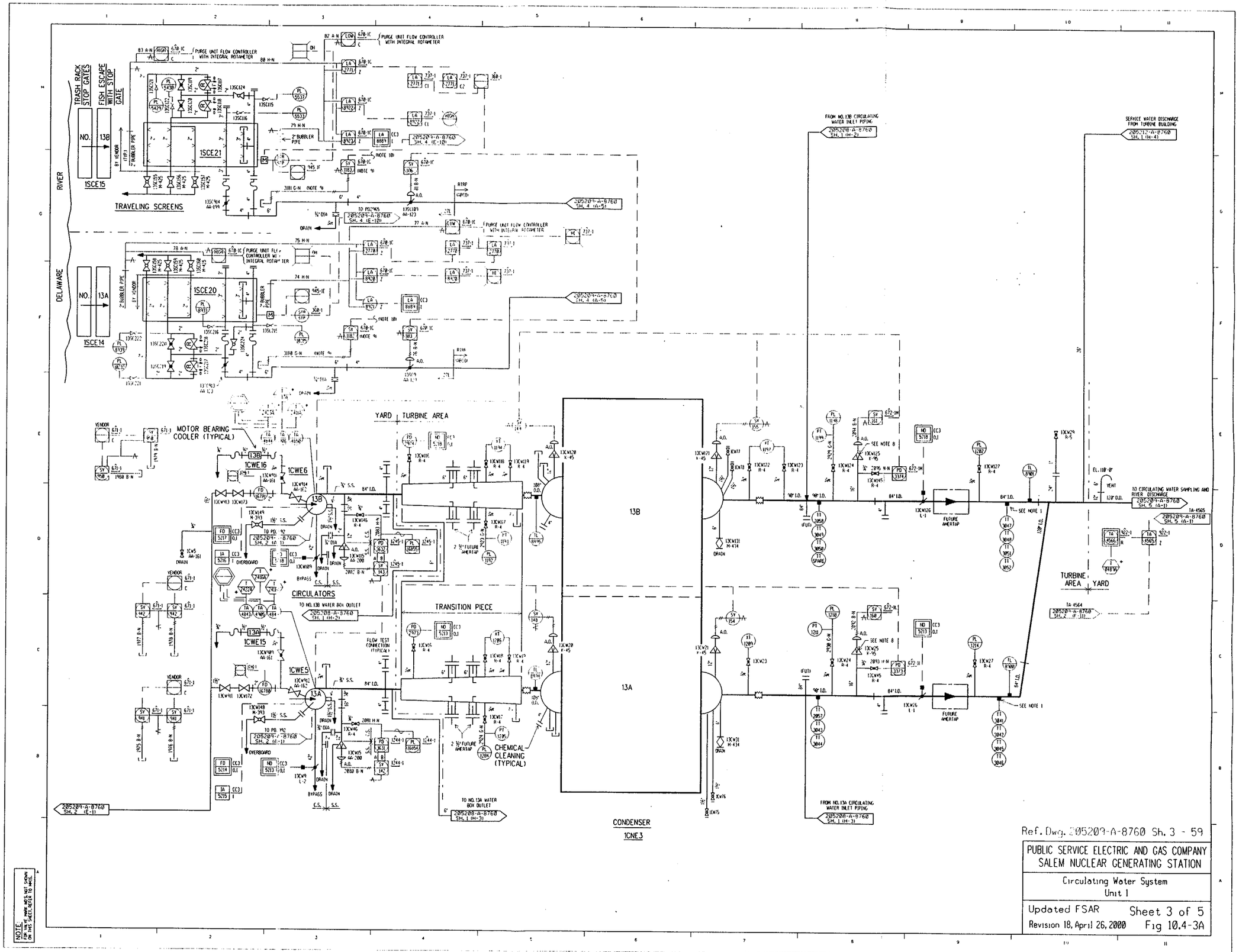

Ref. Dwg. 205209-A-8760 Sh. 3 - 59

PUBLIC SERVICE ELECTRIC AND GAS COMPANY
SALEM NUCLEAR GENERATING STATION

Circulating Water System
Unit 1

Updated FSAR — Sheet 3 of 5

Revision 18, April 26, 2000 — Fig 10.4-3A

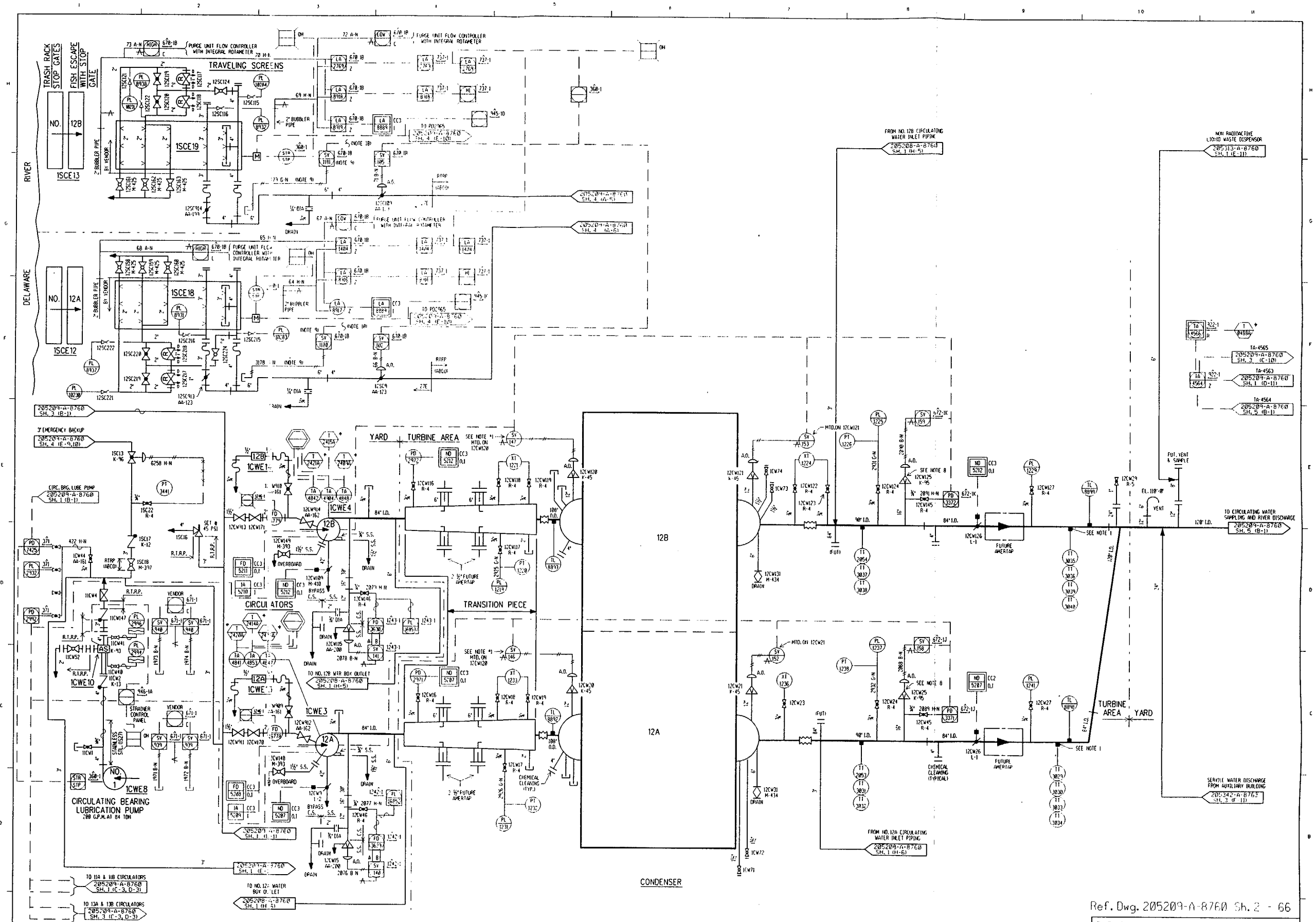

NOTE: FOR VALVE MARK NOS. NOT SHOWN ON THIS SHEET REFER TO MARKS.

Ref. Dwg. 205209-A-8760 Sh. 2 - 66

PUBLIC SERVICE ELECTRIC AND GAS COMPANY
SALEM NUCLEAR GENERATING STATION

Circulating Water System
Unit 1

Updated FSAR — Sheet 2 of 5

Revision 18, April 26, 2000 — Fig 10.4-3A

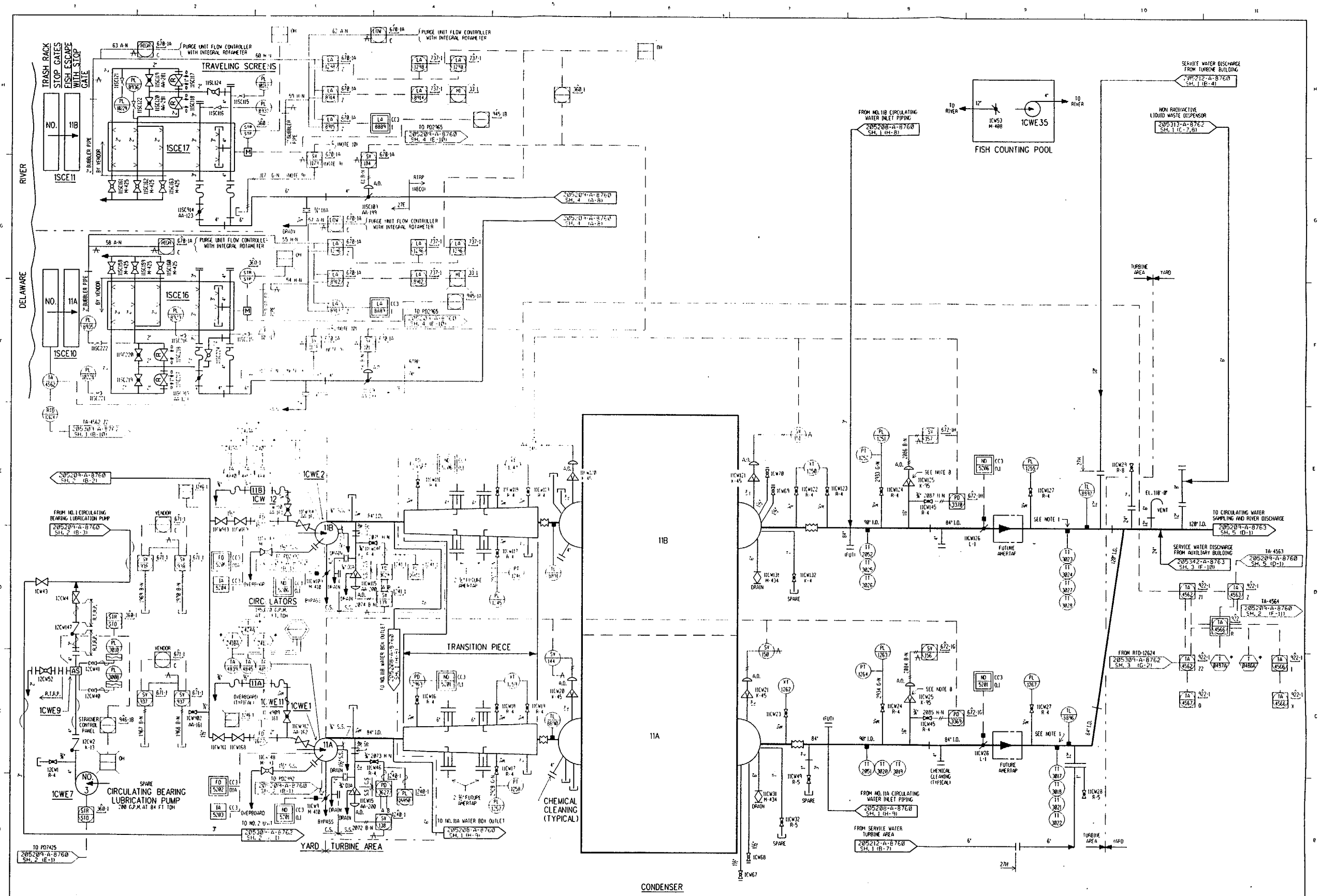

Ref. Dwg. 205209-A-8760 Sh. 1 - 67

PUBLIC SERVICE ELECTRIC AND GAS COMPANY
SALEM NUCLEAR GENERATING STATION

Circulating Water System
Unit 1

Updated FSAR — Sheet 1 of 5
Revision 18, April 26, 2000 — Fig 10.4-3A

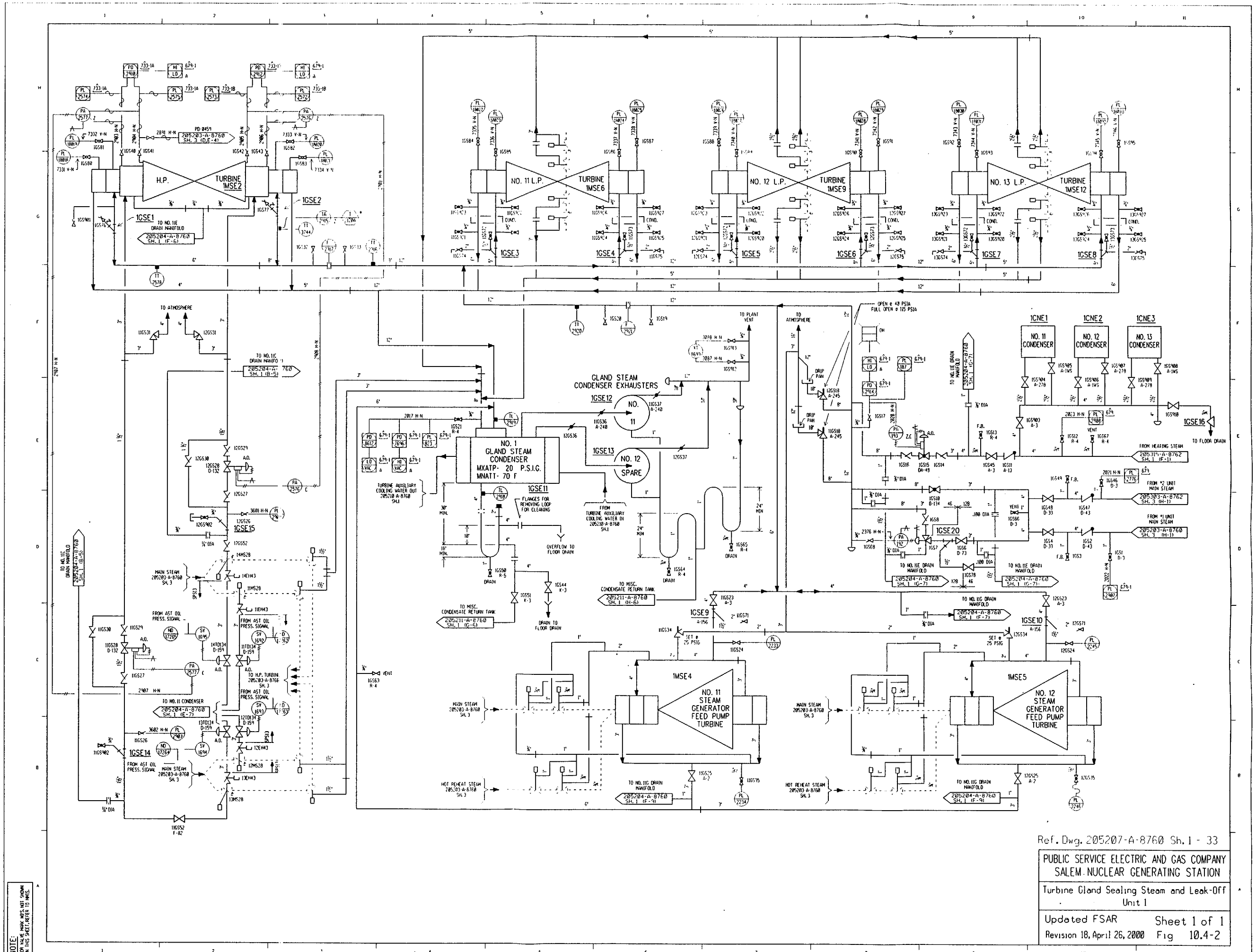

Ref. Dwg. 205207-A-8760 Sh. 1 - 33

PUBLIC SERVICE ELECTRIC AND GAS COMPANY
SALEM NUCLEAR GENERATING STATION

Turbine Gland Sealing Steam and Leak-Off
Unit 1

Updated FSAR Sheet 1 of 1
Revision 18, April 26, 2000 Fig 10.4-2

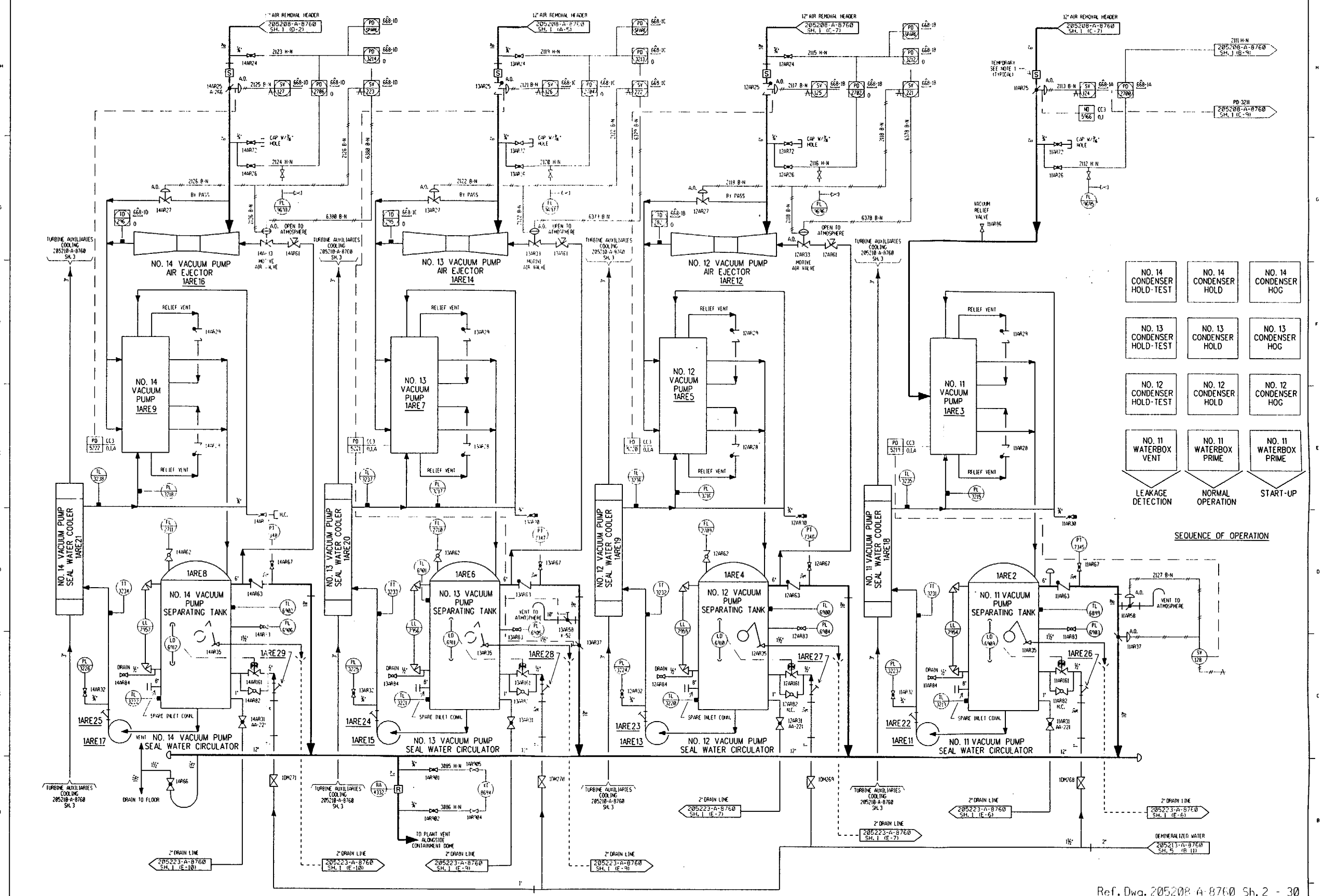

Ref. Dwg. 205208 A-8760 Sh. 2 - 30

PUBLIC SERVICE ELECTRIC AND GAS COMPANY
SALEM NUCLEAR GENERATING STATION

Condenser Air Removal and Priming
Unit 1

Updated FSAR Sheet 2 of 2
Revision 18, April 26, 2000 Fig 10.4-1

NOTE: TSP, HIS, HCPW, VOS, VFS NOT SHOWN ON THIS SHEET, REFER TO HHS.

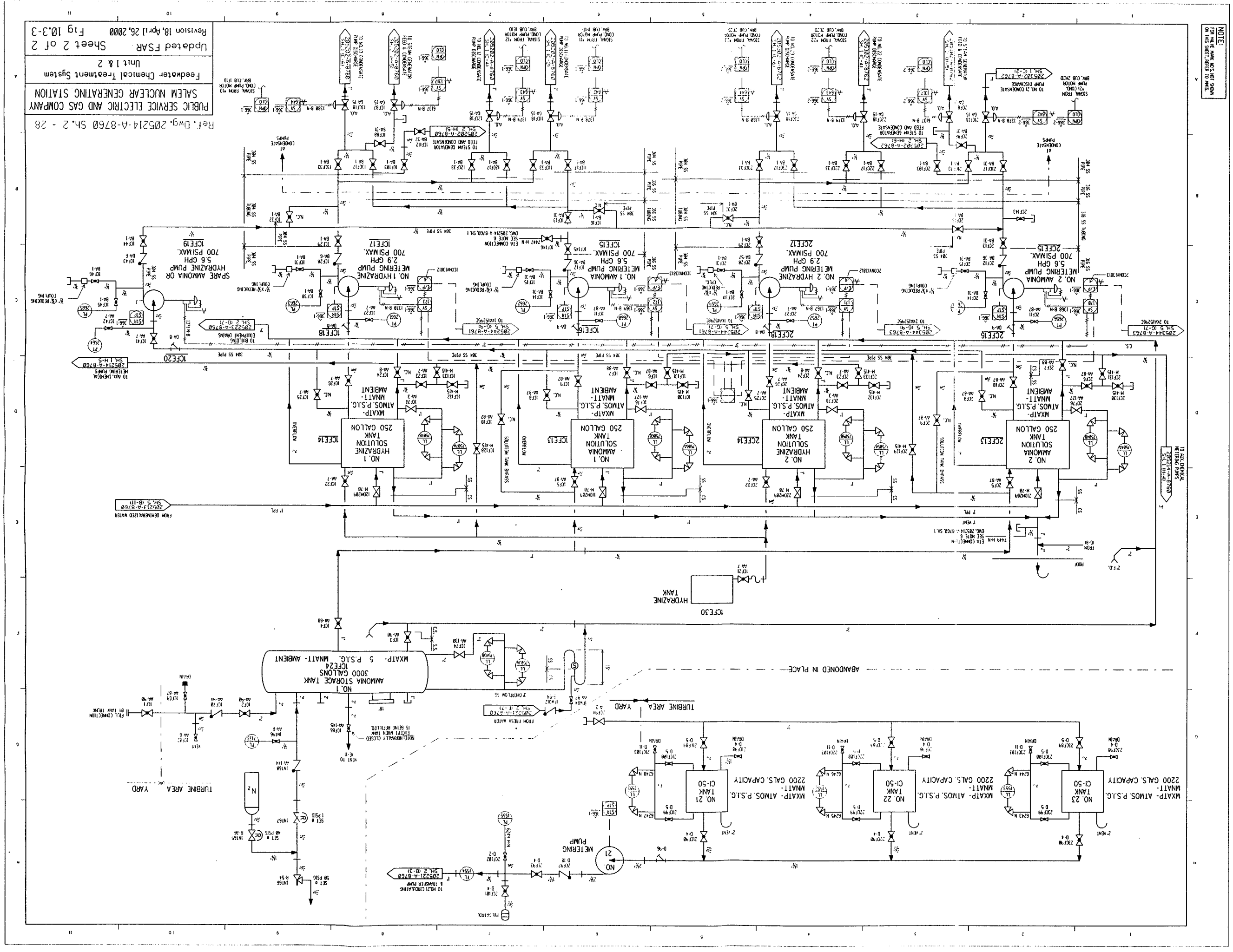
PUBLIC SERVICE ELECTRIC AND GAS COMPANY
SALEM NUCLEAR GENERATING STATION
Feedwater Chemical Treatment System
Unit 1 & 2
Updated FSAR Sheet 2 of 2
Revision 18, April 26, 2000 Fig 10.3-3
Ref. Dwg. 205214-A-8760 Sh. 2 - 28
NOTE:
FOR SIMPLICITY, MANWAYS, NOZZLES AND OTHER VALVES NOT SHOWN
NO. 1 HYDRAZINE SOLUTION TANK 250 GALLON
NO. 1 AMMONIA SOLUTION TANK 250 GALLON
NO. 2 HYDRAZINE SOLUTION TANK 250 GALLON
NO. 2 AMMONIA SOLUTION TANK 250 GALLON
NO. 1 AMMONIA STORAGE TANK 3000 GALLONS
NO. 1 HYDRAZINE METERING PUMP 2.9 GPM 700 PSIMAX.
NO. 1 AMMONIA METERING PUMP 5.6 GPM 700 PSIMAX.
NO. 2 HYDRAZINE METERING PUMP 2.9 GPM 700 PSIMAX.
NO. 2 AMMONIA METERING PUMP 5.6 GPM 700 PSIMAX.
SPARE AMMONIA OR HYDRAZINE PUMP 5.6 GPM 700 PSIMAX.
NO. 21 TANK CI-50
NO. 22 TANK CI-50
NO. 23 TANK CI-50
MXATP- ATMOS. P.S.I.G. MNATT- AMBIENT
MXATP- ATMOS. P.S.I.G. MNATT- 2200 GALS. CAPACITY
HYDRAZINE TANK
TURBINE AREA YARD
ABANDONED IN PLACE
FROM DEMINERALIZED WATER
FROM FRESH WATER
TO AUX. CHEMICAL METERING PUMPS
TO BUILDING EQUIPMENT DRAINS
TO NO.21 CIRCULATING & TRANSFER PUMP
NO. 21
METERING PUMP
N2

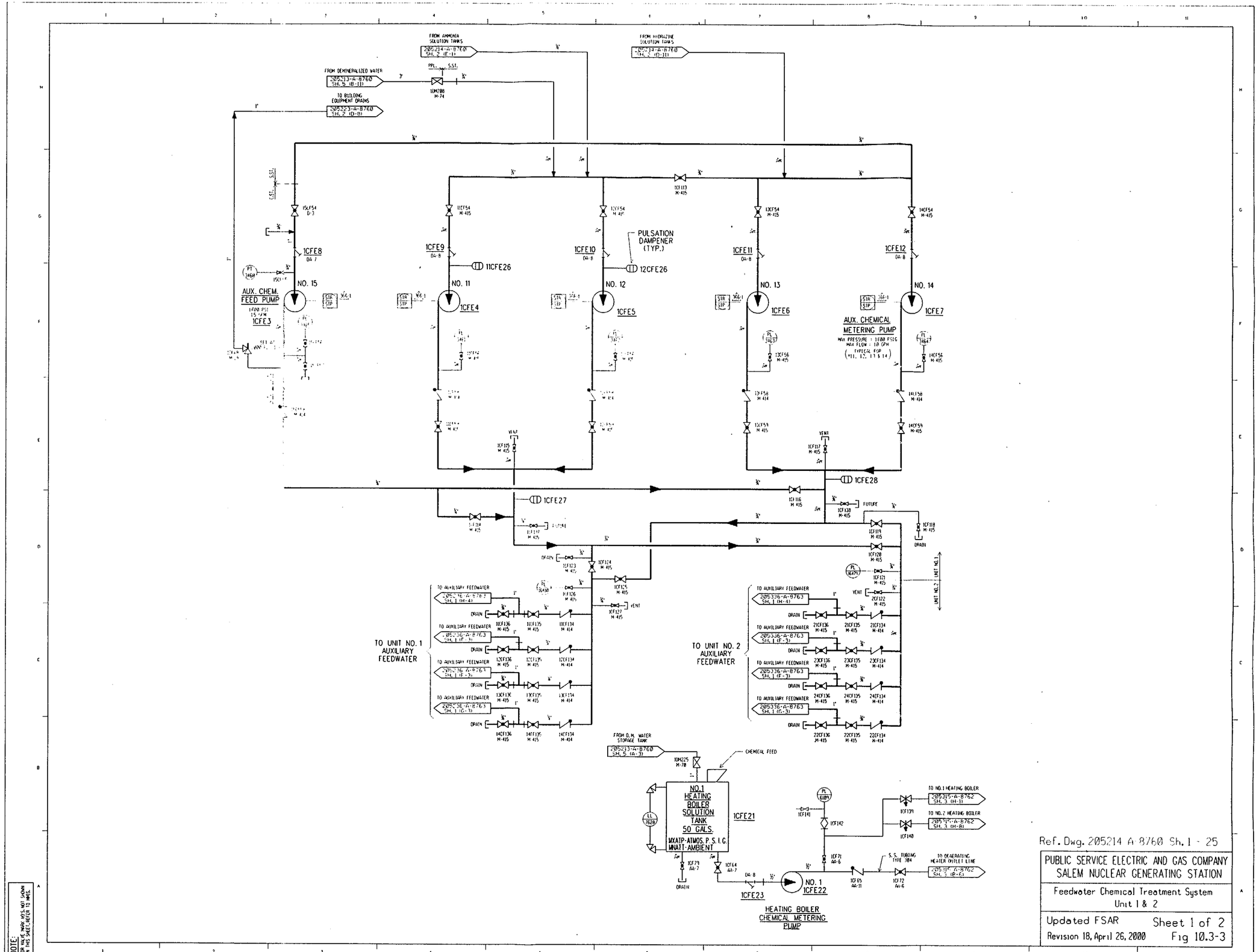

Ref. Dwg. 205214 A-8760 Sh. 1 - 25

PUBLIC SERVICE ELECTRIC AND GAS COMPANY
SALEM NUCLEAR GENERATING STATION

Feedwater Chemical Treatment System
Unit 1 & 2

Updated FSAR
Revision 18, April 26, 2000

Sheet 1 of 2
Fig 10.3-3

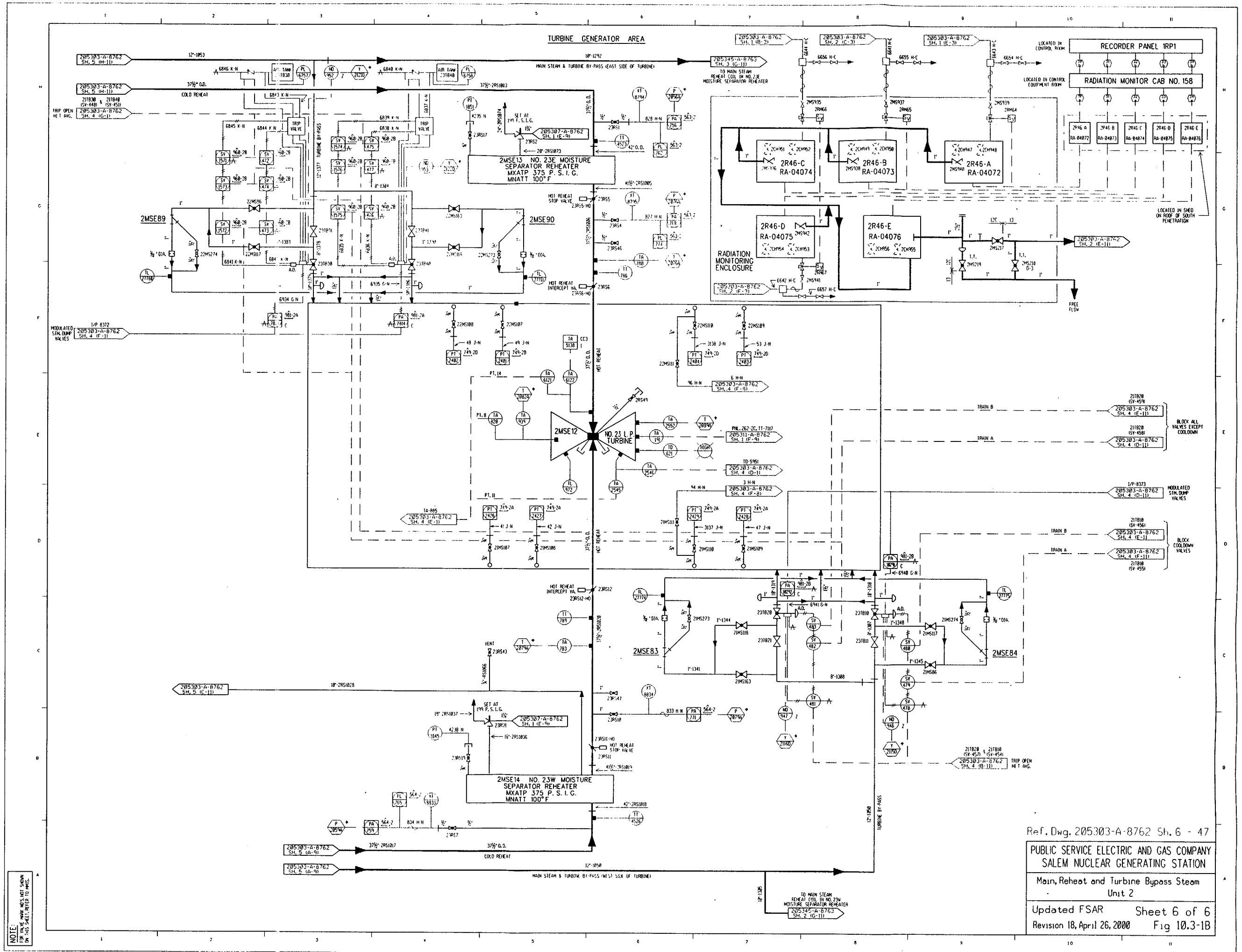

Ref. Dwg. 205303-A-8762 Sh. 6 - 47

PUBLIC SERVICE ELECTRIC AND GAS COMPANY
SALEM NUCLEAR GENERATING STATION

Main, Reheat and Turbine Bypass Steam
Unit 2

Updated FSAR — Sheet 6 of 6
Revision 18, April 26, 2000 — Fig 10.3-1B

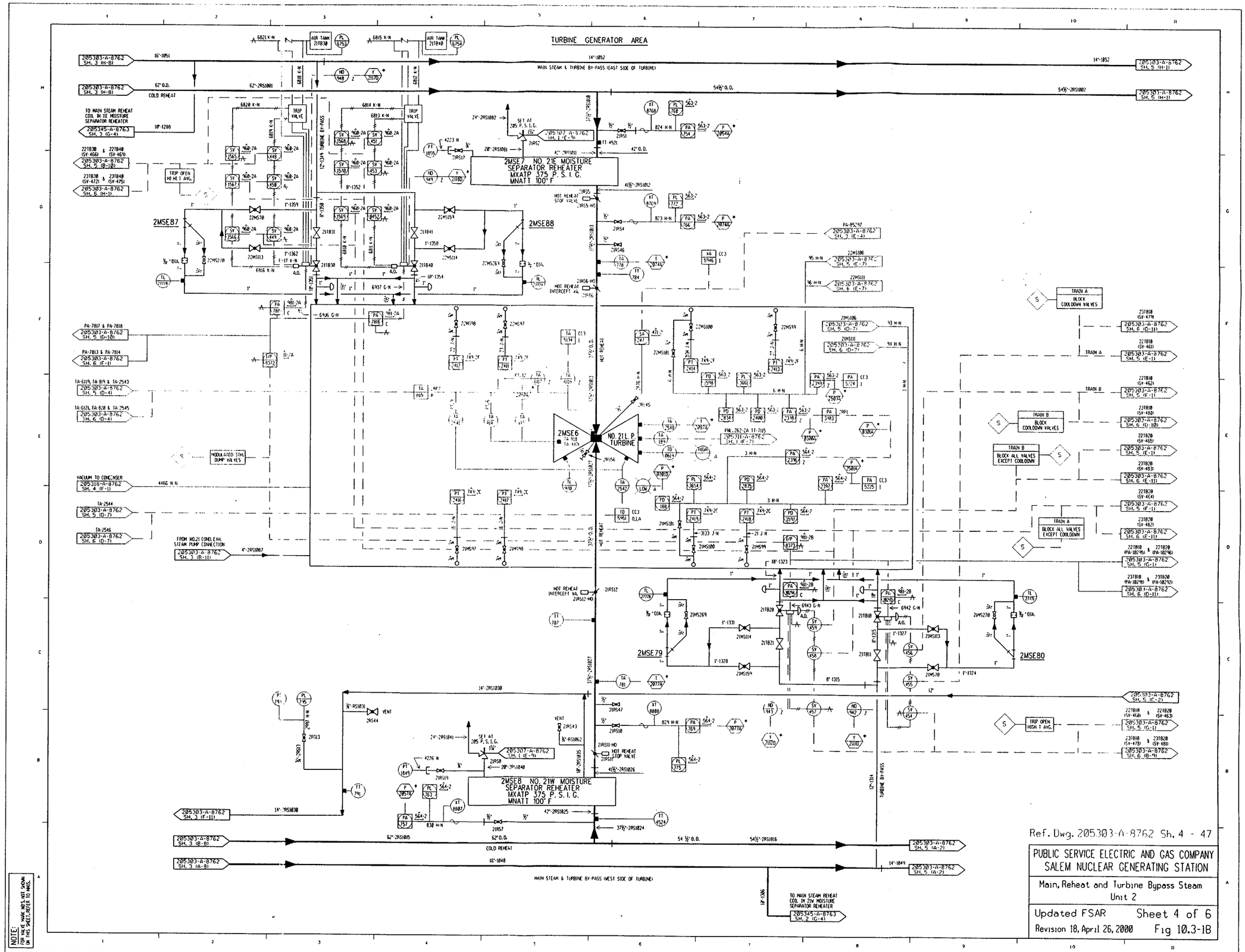

Ref. Dwg. 205303-A-8762 Sh. 4 - 47

PUBLIC SERVICE ELECTRIC AND GAS COMPANY
SALEM NUCLEAR GENERATING STATION

Main, Reheat and Turbine Bypass Steam
Unit 2

Updated FSAR Sheet 4 of 6
Revision 18, April 26, 2000 Fig 10.3-1B

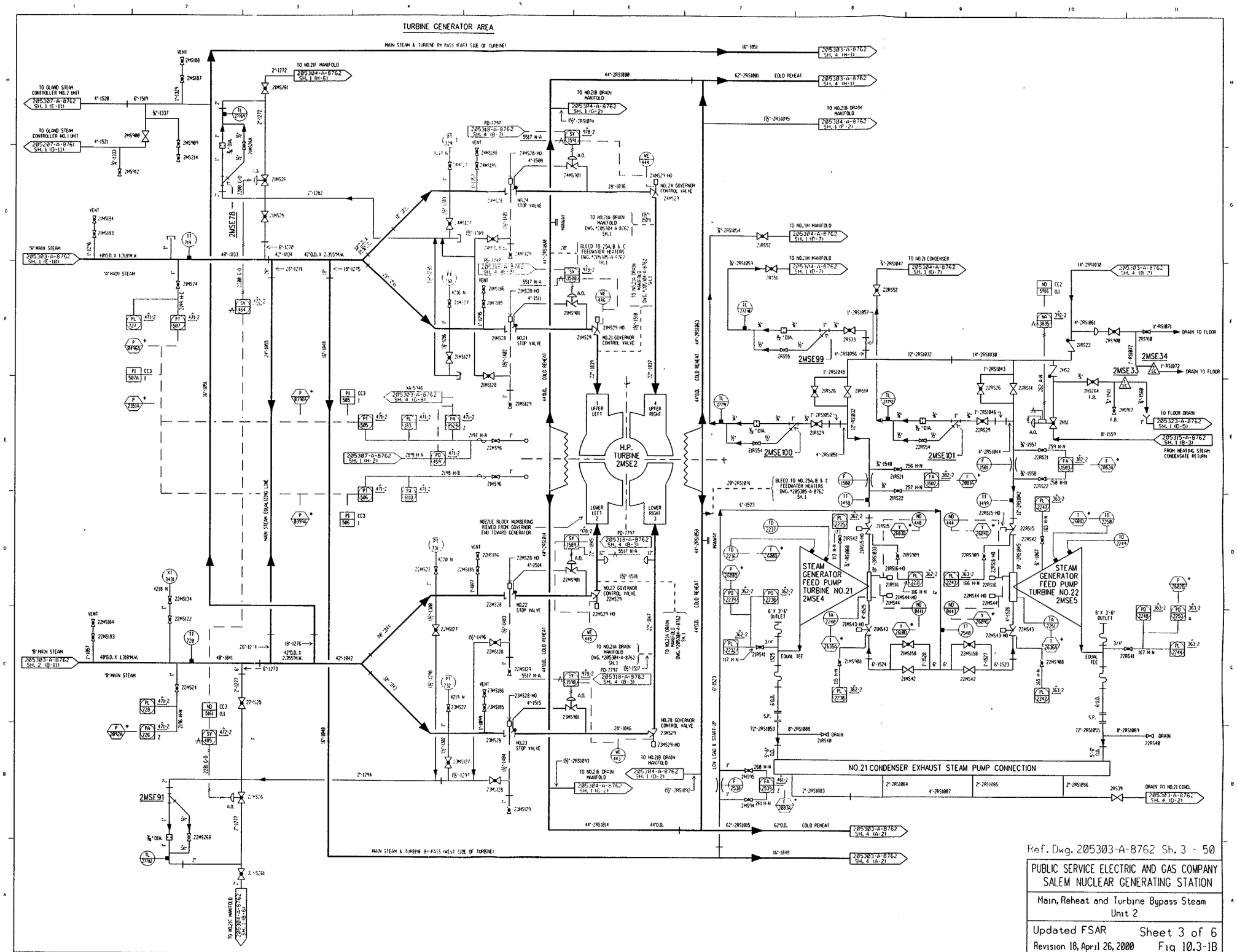

Ref. Dwg. 205303-A-8762 Sh. 3 - 50

PUBLIC SERVICE ELECTRIC AND GAS COMPANY
SALEM NUCLEAR GENERATING STATION

Main, Reheat and Turbine Bypass Steam
Unit 2

Updated FSAR
Revision 18, April 26, 2000

Sheet 3 of 6
Fig 10.3-1B

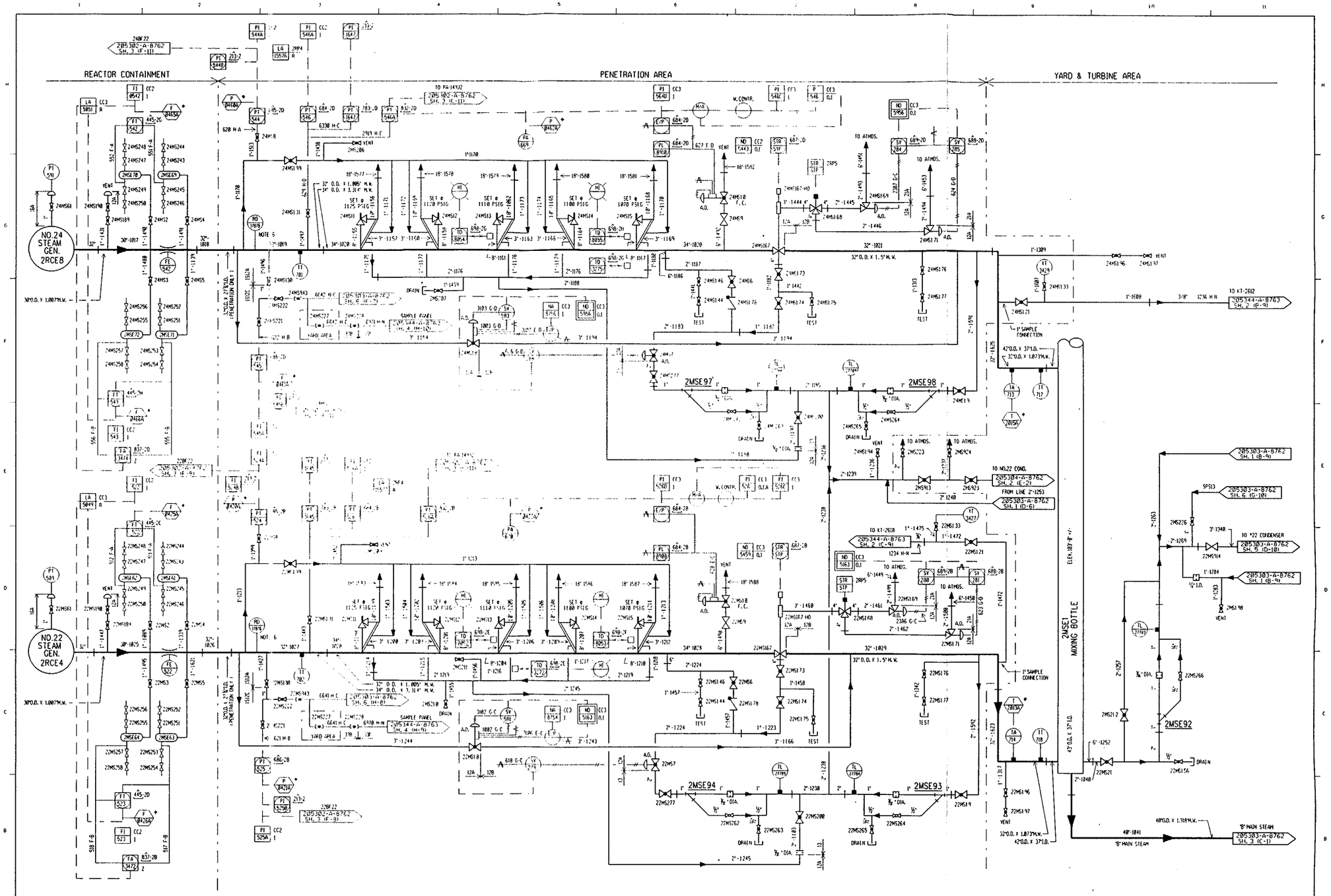

NOTE: FOR VALVE MARK NOS. NOT SHOWN ON THIS SHEET, REFER TO VMS.

Ref. Dwg. 205303-A-8762 Sh. 2 - 58

PUBLIC SERVICE ELECTRIC AND GAS COMPANY
SALEM NUCLEAR GENERATING STATION

Main, Reheat and Turbine Bypass Steam
Unit 2

Updated FSAR
Revision 18, April 26, 2000

Sheet 2 of 6
Fig 10.3-1B

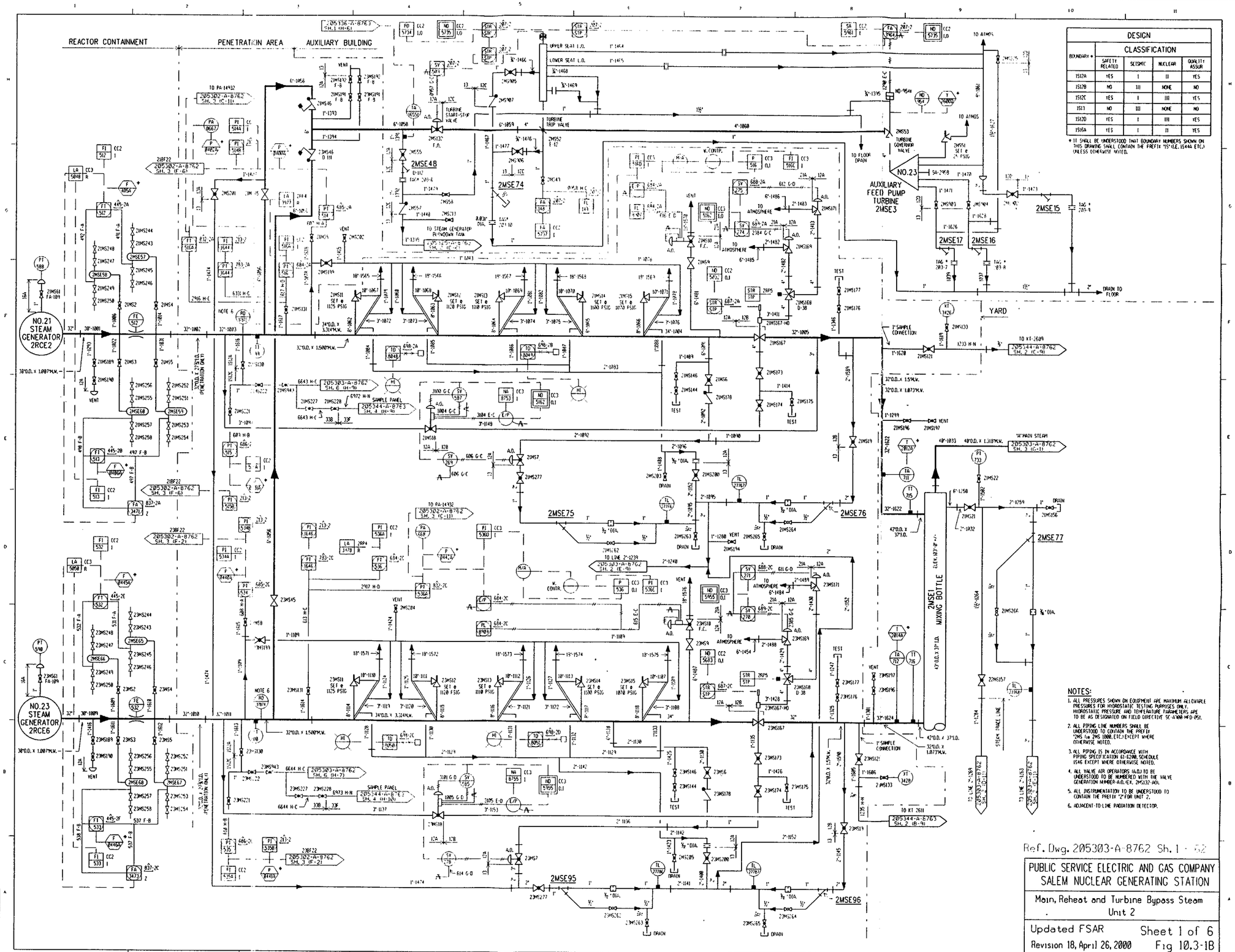

DESIGN CLASSIFICATION				
BOUNDARY *	SAFETY RELATED	SEISMIC	NUCLEAR	QUALITY ASSUR.
1512A	YES	I	II	YES
1512B	NO	III	NONE	NO
1512C	YES	I	III	YES
1513	NO	III	NONE	NO
1512D	YES	I	III	YES
1516A	YES	I	II	YES

* IT SHALL BE UNDERSTOOD THAT BOUNDARY NUMBERS SHOWN ON THIS DRAWING SHALL CONTAIN THE PREFIX "1512", 1516A, 1544A ETC.) UNLESS OTHERWISE NOTED.

NOTES:

1. ALL PRESSURES SHOWN ON EQUIPMENT ARE MAXIMUM ALLOWABLE PRESSURES FOR HYDROSTATIC TESTING PURPOSES ONLY. HYDROSTATIC PRESSURE AND TEMPERATURE PARAMETERS ARE TO BE AS DESIGNATED ON FIELD DIRECTIVE SC-A-000 MED 051.
2. ALL PIPING LINE NUMBERS SHALL BE UNDERSTOOD TO CONTAIN THE PREFIX "2MS (or 2MS 1000, ETC.) EXCEPT WHERE OTHERWISE NOTED.
3. ALL PIPING IS IN ACCORDANCE WITH PIPING SPECIFICATION 61-6200, SCHEDULE 1546 EXCEPT WHERE OTHERWISE NOTED.
4. ALL VALVE AIR OPERATORS (A.O.) TO BE UNDERSTOOD TO BE NUMBERED WITH THE VALVE GENERATION NUMBER-A.O. (E.G., 2MS132-AO).
5. ALL INSTRUMENTATION TO BE UNDERSTOOD TO CONTAIN THE PREFIX "2" FOR UNIT 2.
6. ADJACENT-TO LINE RADIATION DETECTOR.

NOTE: FOR VALVE NUMBERS NOT SHOWN ON THIS SHEET, REFER TO SDP.

Ref. Dwg. 205303-A-8762 Sh. 1 - 62

PUBLIC SERVICE ELECTRIC AND GAS COMPANY
SALEM NUCLEAR GENERATING STATION

Main, Reheat and Turbine Bypass Steam
Unit 2

Updated FSAR
Revision 18, April 26, 2000

Sheet 1 of 6
Fig 10.3-1B

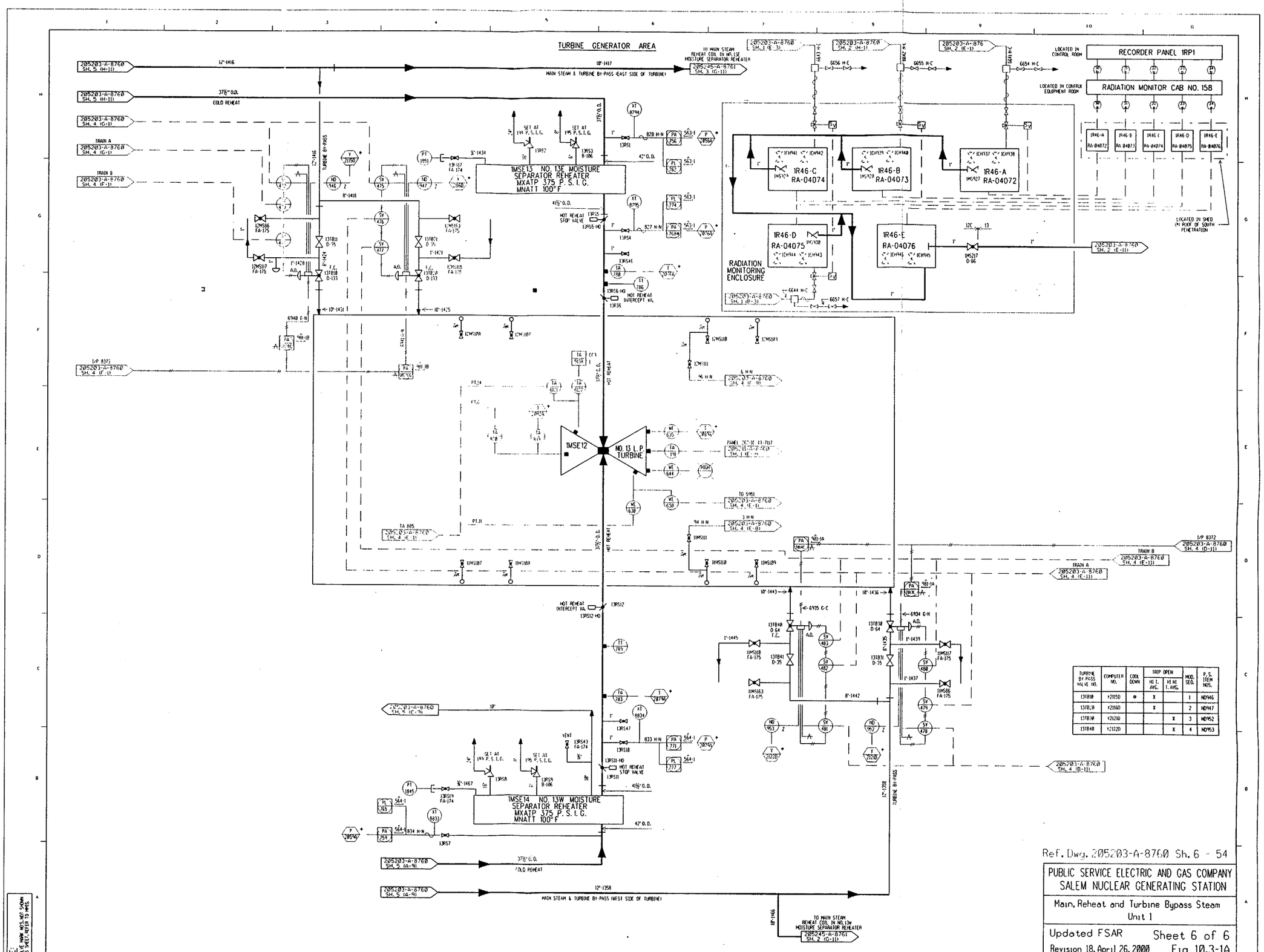

TURBINE BY-PASS VALVE NO.	COMPUTER NO.	COOL DOWN	TRIP OPEN HI T. AVG.	TRIP OPEN HI HI T. AVG.	MOD. SEQ.	P.S. ITEM NOS.
13TB10	Y21150	o	X		1	ND946
13TB20	Y21160		X		2	ND947
13TB30	Y21230			X	3	ND952
13TB40	Y21220			X	4	ND953

Ref. Dwg. 205203-A-8760 Sh. 6 - 54

PUBLIC SERVICE ELECTRIC AND GAS COMPANY
SALEM NUCLEAR GENERATING STATION

Main, Reheat and Turbine Bypass Steam
Unit 1

Updated FSAR Sheet 6 of 6
Revision 18, April 26, 2000 Fig 10.3-1A

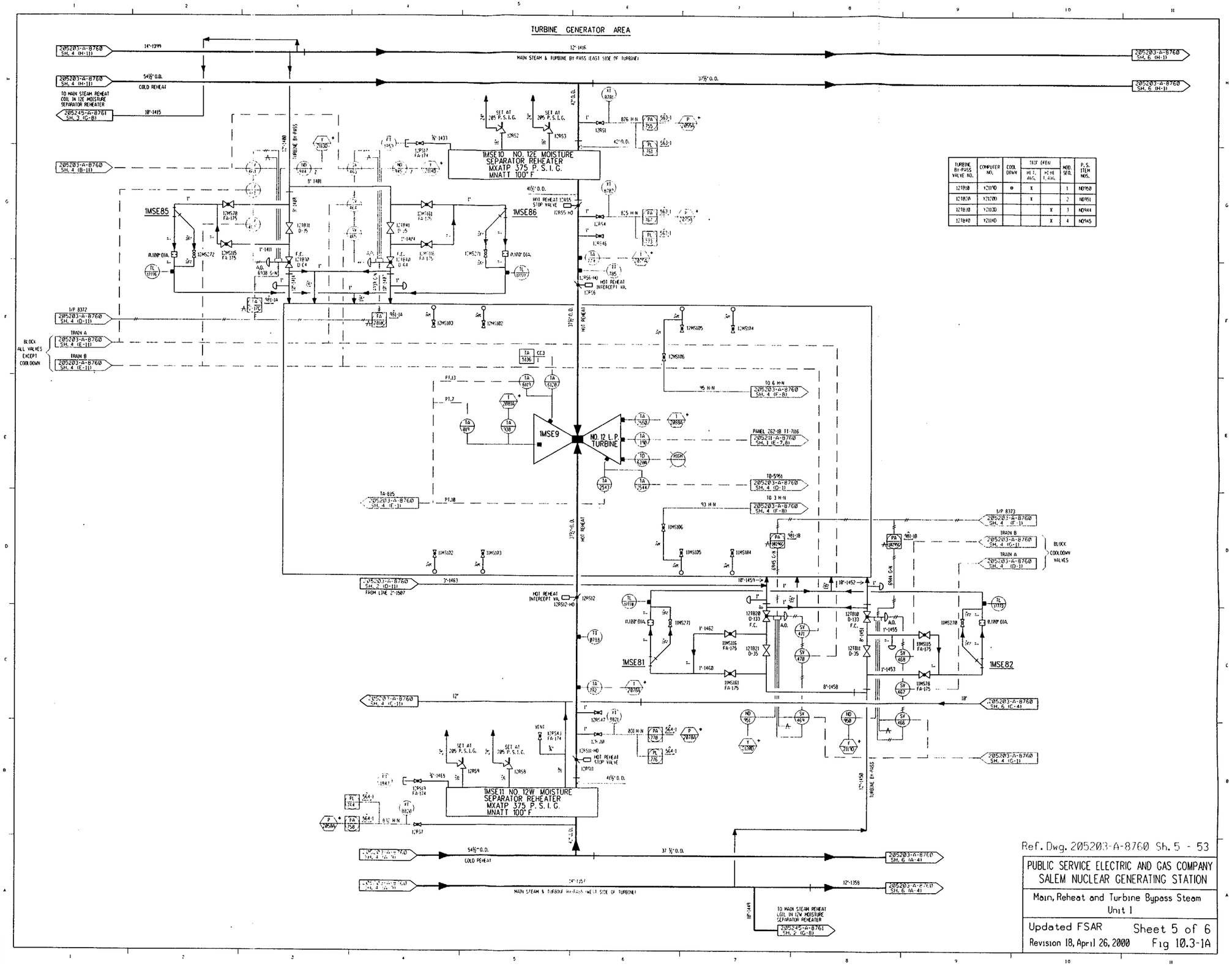

TURBINE BY-PASS VALVE NO.	COMPUTER NO.	COOL DOWN	TRIP OPEN HI T. AVG.	TRIP OPEN HI HI T. AVG.	MOD. SEQ.	P.S. ITEM NOS.
12TB10	Y2110D	●	X		1	ND950
12TB20	Y2120D		X		2	ND951
12TB30	Y2113D			X	3	ND944
12TB40	Y2114D			X	4	ND945

Ref. Dwg. 205203-A-8760 Sh. 5 - 53

PUBLIC SERVICE ELECTRIC AND GAS COMPANY
SALEM NUCLEAR GENERATING STATION

Main, Reheat and Turbine Bypass Steam
Unit 1

Updated FSAR Sheet 5 of 6
Revision 18, April 26, 2000 Fig 10.3-1A

NOTE: FOR VALVE MARK NOS. NOT SHOWN ON THIS SHEET, REFER TO MMS.

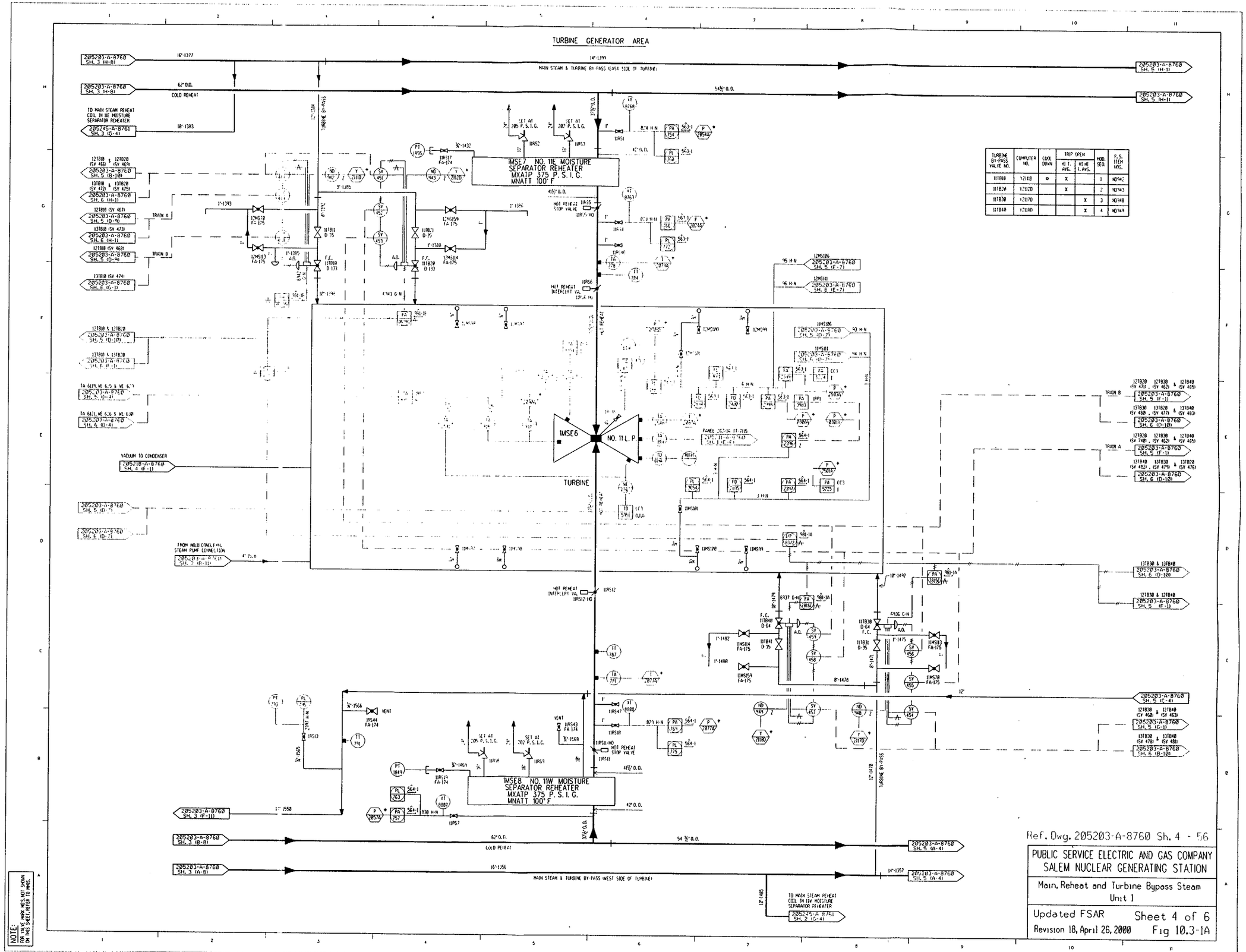

TURBINE BY-PASS VALVE NO.	COMPUTER NO.	COOL DOWN	TRIP OPEN HI T. AVG.	TRIP OPEN HI HI T. AVG.	MOD. SEQ.	P.S. ITEM NOS.
11TB10	X21110	O	X		1	ND942
11TB20	X21120		X		2	ND943
11TB30	X21170			X	3	ND948
11TB40	X21180			X	4	ND949

NOTE: FOR VALVE MARK NOS. NOT SHOWN ON THIS SHEET, REFER TO MMDS.

Ref. Dwg. 205203-A-8760 Sh. 4 - 56

PUBLIC SERVICE ELECTRIC AND GAS COMPANY
SALEM NUCLEAR GENERATING STATION

Main, Reheat and Turbine Byposs Steam
Unit 1

Updated FSAR Sheet 4 of 6
Revision 18, April 26, 2000 Fig 10.3-1A

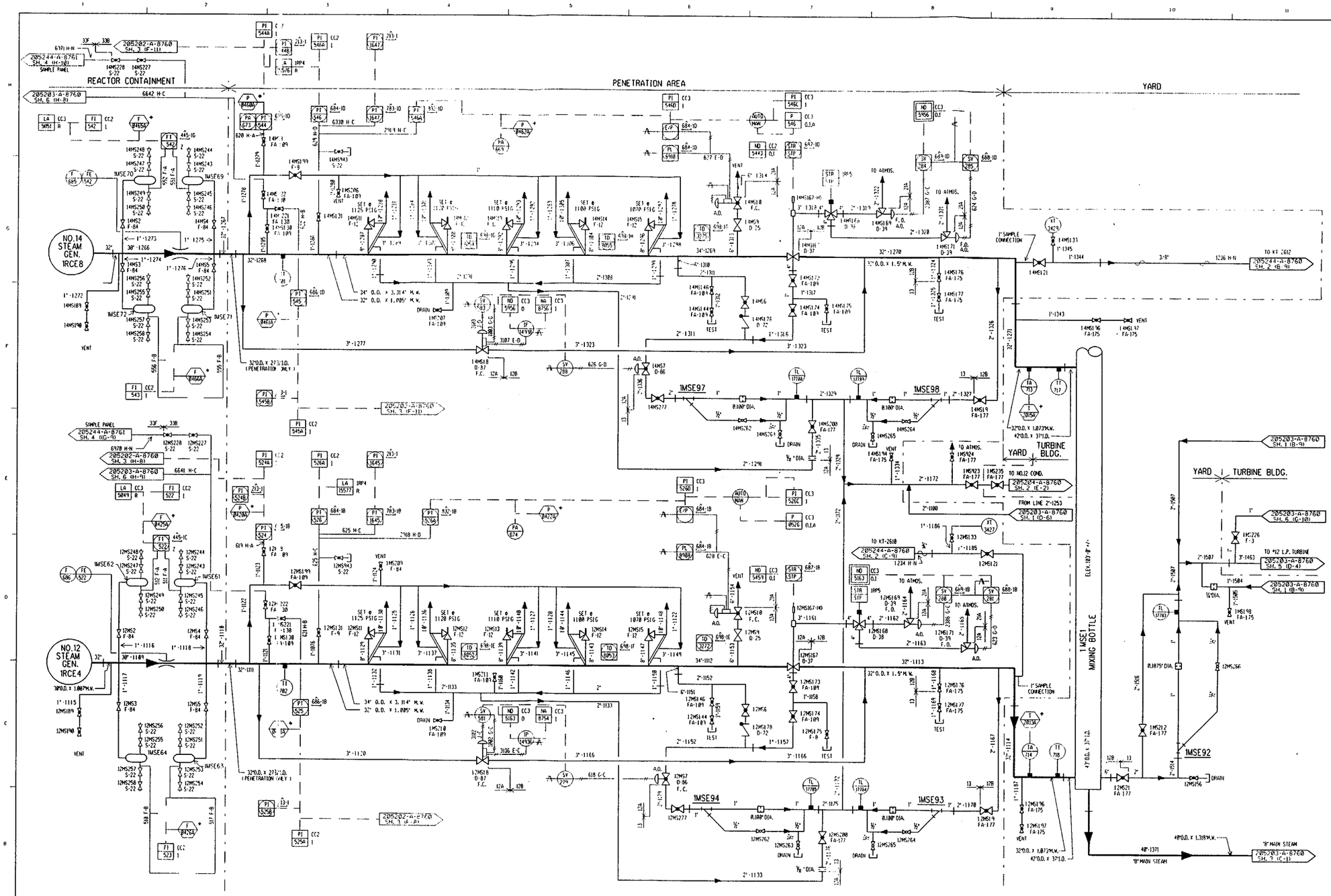

Ref. Dwg. 205203-A-8760 Sh. 2 - 73

PUBLIC SERVICE ELECTRIC AND GAS COMPANY
SALEM NUCLEAR GENERATING STATION

Main, Reheat and Turbine Bypass Steam
Unit 1

Updated FSAR Sheet 2 of 6
Revision 18, April 26, 2000 Fig 10.3-1A

NOTE:
FOR VALVE NUMBERS NOT SHOWN ON THIS SHEET, REFER TO HMIS.

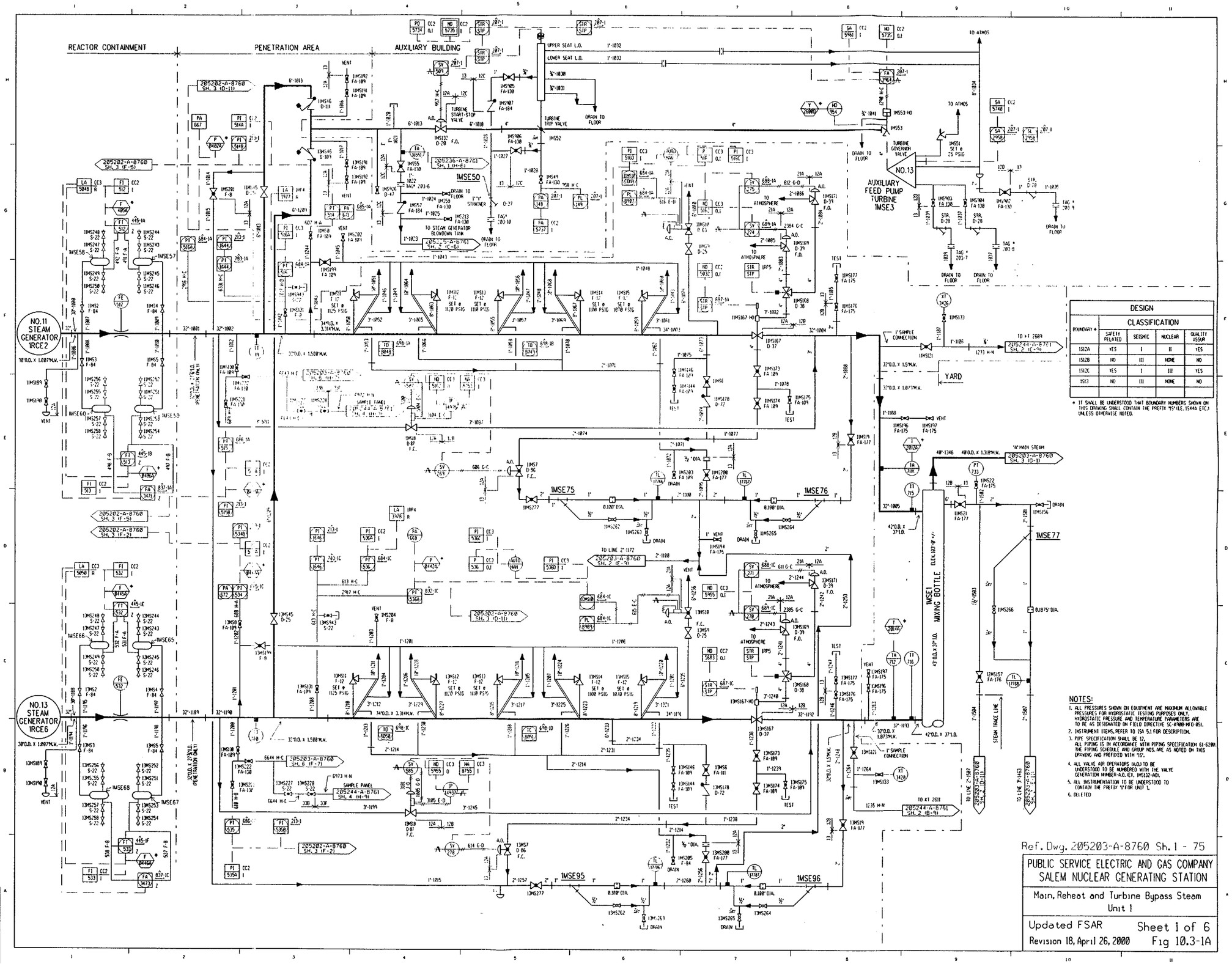

DESIGN CLASSIFICATION				
BOUNDARY *	SAFETY RELATED	SEISMIC	NUCLEAR	QUALITY ASSUR
1512A	YES	I	II	YES
1512B	NO	III	NONE	NO
1512C	YES	I	III	YES
1513	NO	III	NONE	NO

* IT SHALL BE UNDERSTOOD THAT BOUNDARY NUMBERS SHOWN ON THIS DRAWING SHALL CONTAIN THE PREFIX "1S" (I.E. 1S44A ETC.) UNLESS OTHERWISE NOTED.

NOTES:

1. ALL PRESSURES SHOWN ON EQUIPMENT ARE MAXIMUM ALLOWABLE PRESSURES FOR HYDROSTATIC TESTING PURPOSES ONLY. HYDROSTATIC PRESSURE AND TEMPERATURE PARAMETERS ARE TO BE AS DESIGNATED ON FIELD DIRECTIVE SC-4700-M10 (B).
2. INSTRUMENT ITEMS, REFER TO ISA 5.1 FOR DESCRIPTION.
3. PIPE SPECIFICATION SHALL BE 12, ALL PIPING IS IN ACCORDANCE WITH PIPING SPECIFICATION G1-6200. THE PIPING SCHEDULE AND GROUP NOS. ARE AS NOTED ON THIS DRAWING AND PREFIXED WITH "1S".
4. ALL VALVE AIR OPERATORS (A.O.) TO BE UNDERSTOOD TO BE NUMBERED WITH THE VALVE GENERATION NUMBER-A.O. (E.X. 1MS132-AO).
5. ALL INSTRUMENTATION TO BE UNDERSTOOD TO CONTAIN THE PREFIX "1" FOR UNIT 1.
6. DELETED

Ref. Dwg. 205203-A-8760 Sh. 1 - 75

PUBLIC SERVICE ELECTRIC AND GAS COMPANY
SALEM NUCLEAR GENERATING STATION

Main, Reheat and Turbine Bypass Steam
Unit 1

Updated FSAR — Sheet 1 of 6
Revision 18, April 26, 2000 — Fig 10.3-1A

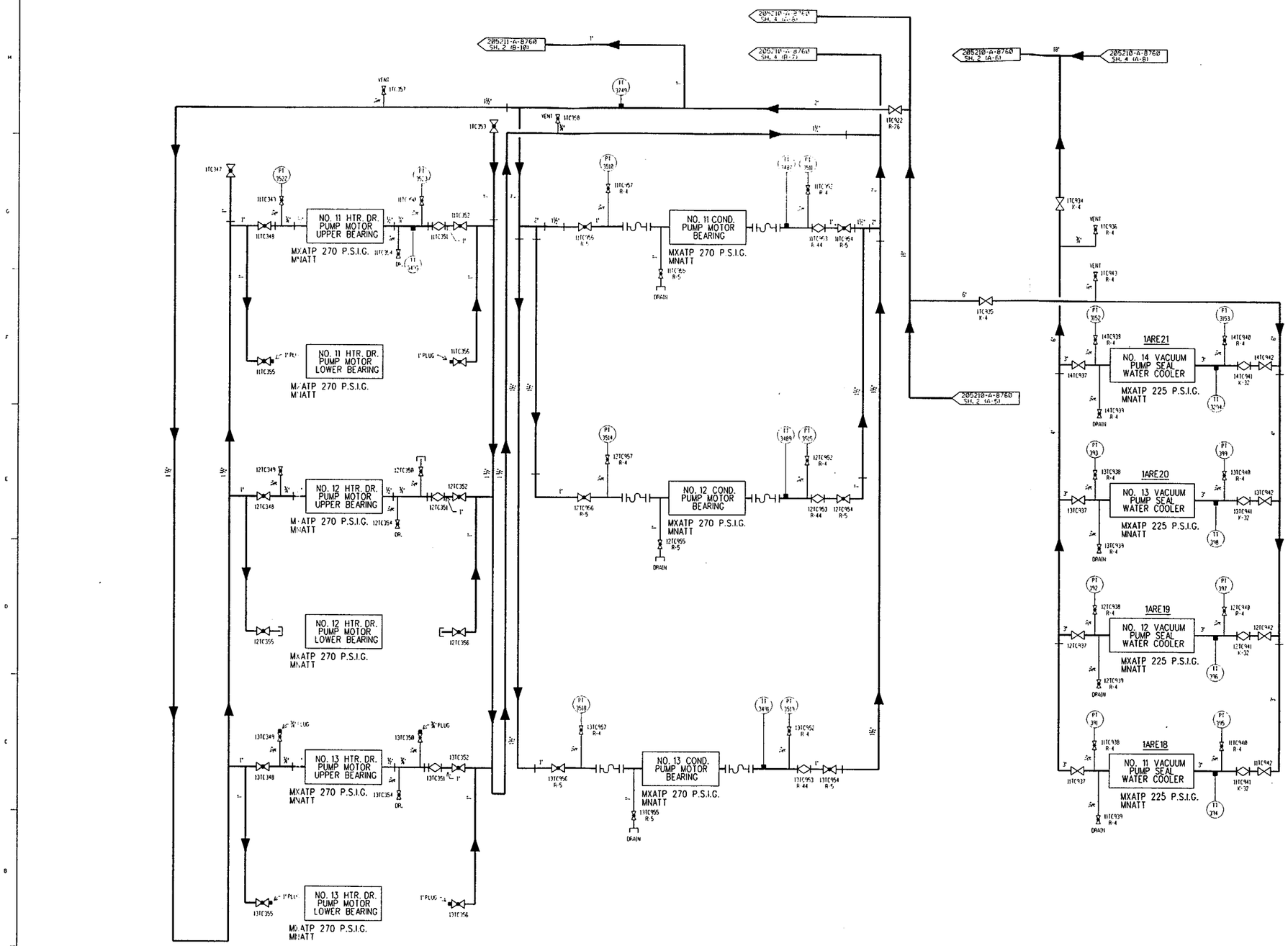

NOTE: DRAWING NOT SHOWN OR THIS SHEET, REFER TO UNITS.

Ref. Dwg. 205210-A-8760 Sh. 3 - 30

PUBLIC SERVICE ELECTRIC AND GAS COMPANY
SALEM NUCLEAR GENERATING STATION

Turbine Auxiliaries Cooling System
Unit 1

Updated FSAR Sheet 3 of 4
Revision 18, April 26, 2000 Fig 10.2-4

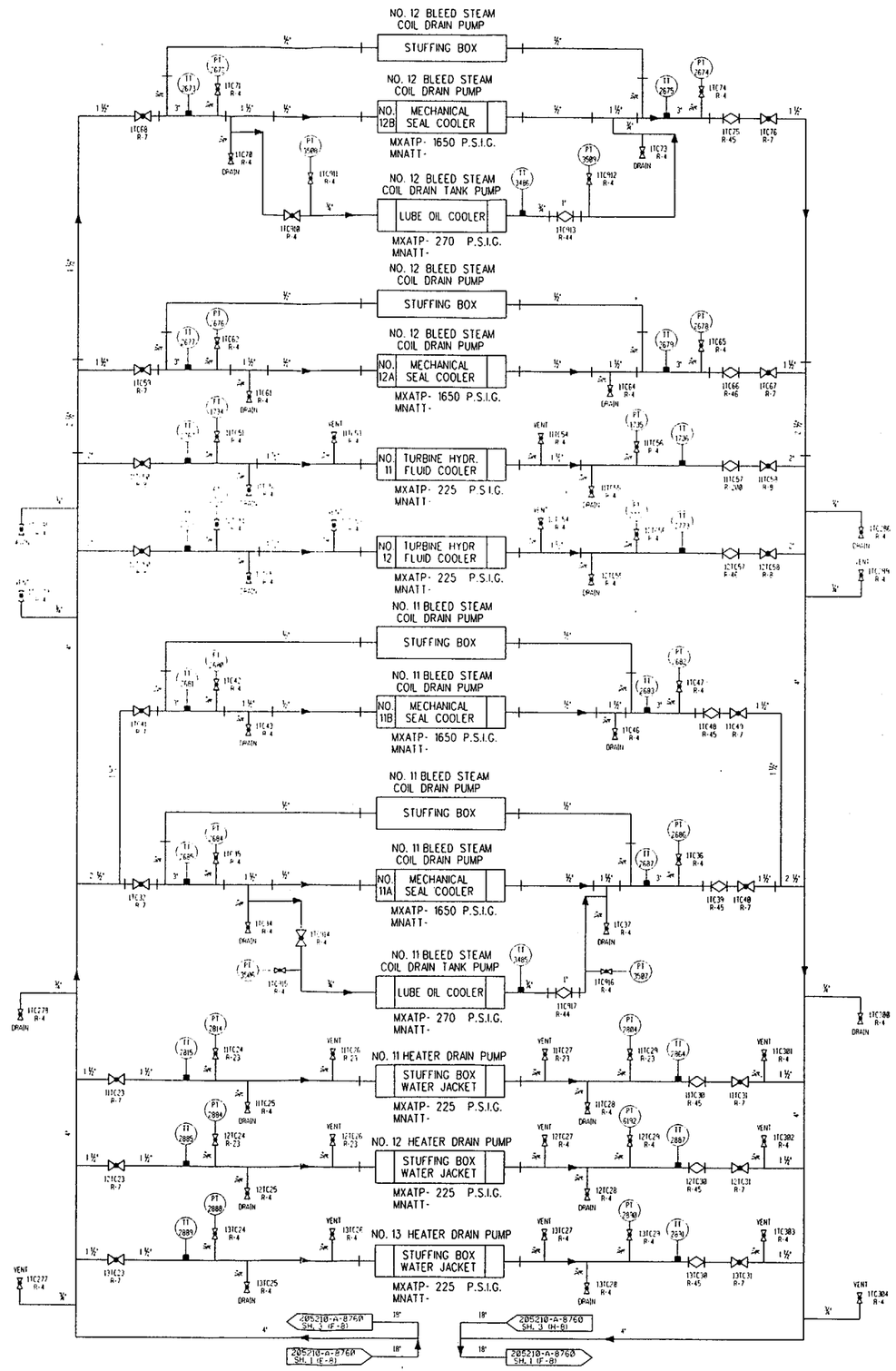

Ref. Dwg. 205210-A-8760- Sh. 2 - 27

PUBLIC SERVICE ELECTRIC AND GAS COMPANY
SALEM NUCLEAR GENERATING STATION

Turbine Auxiliaries Cooling System
Unit 1

Updated FSAR Sheet 2 of 4
Revision 18, April 26, 2000 Fig 10.2-4

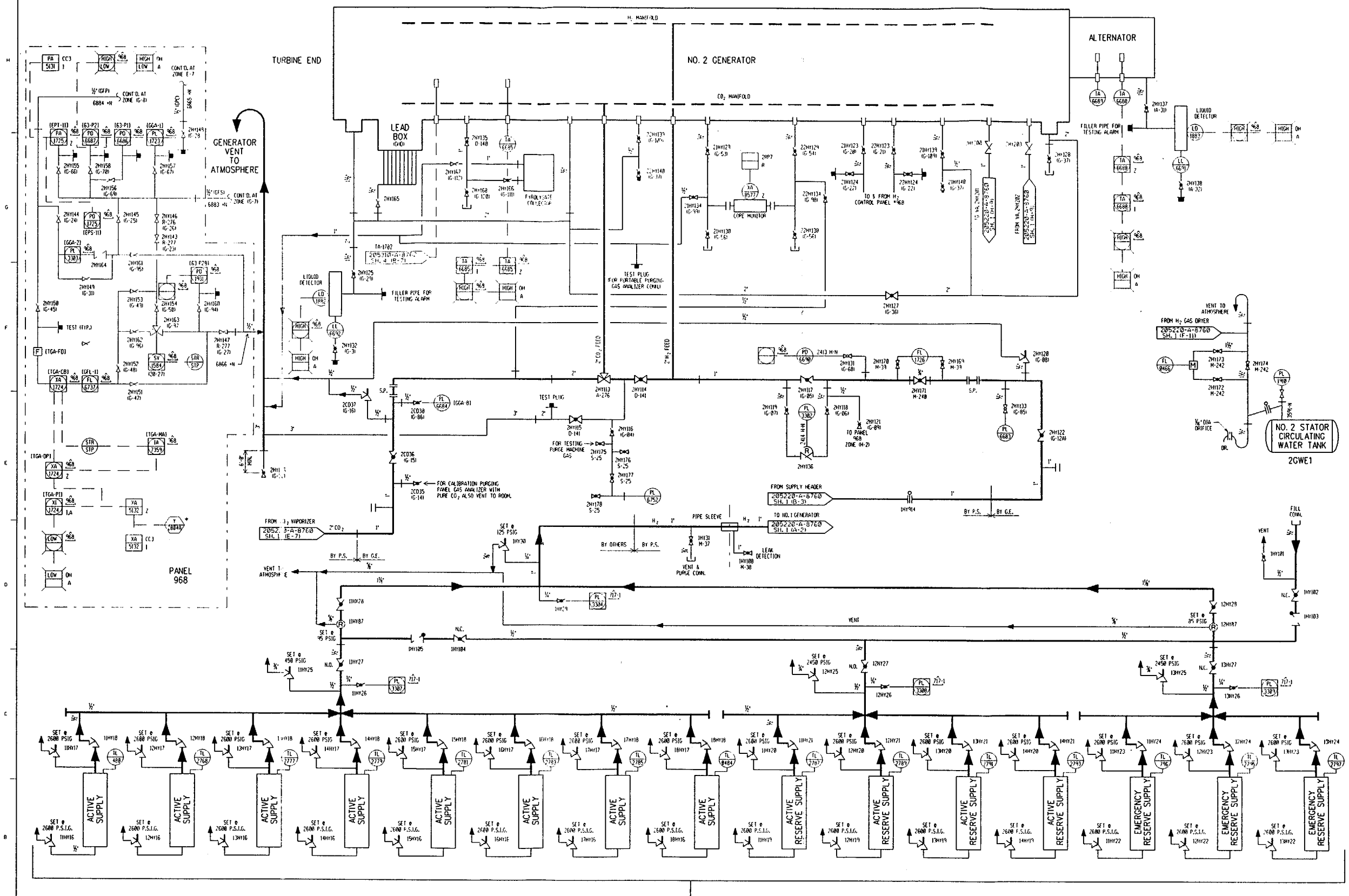

Ref. Dwg. 205220-A-8760 Sh. 2 - 34

PUBLIC SERVICE ELECTRIC AND GAS COMPANY
SALEM NUCLEAR GENERATING STATION

Hydrogen and Carbon Dioxide Systems
Unit 1 & 2

Updated FSAR — Sheet 2 of 2

Revision 18, April 26, 2000 — Fig 10.2-3

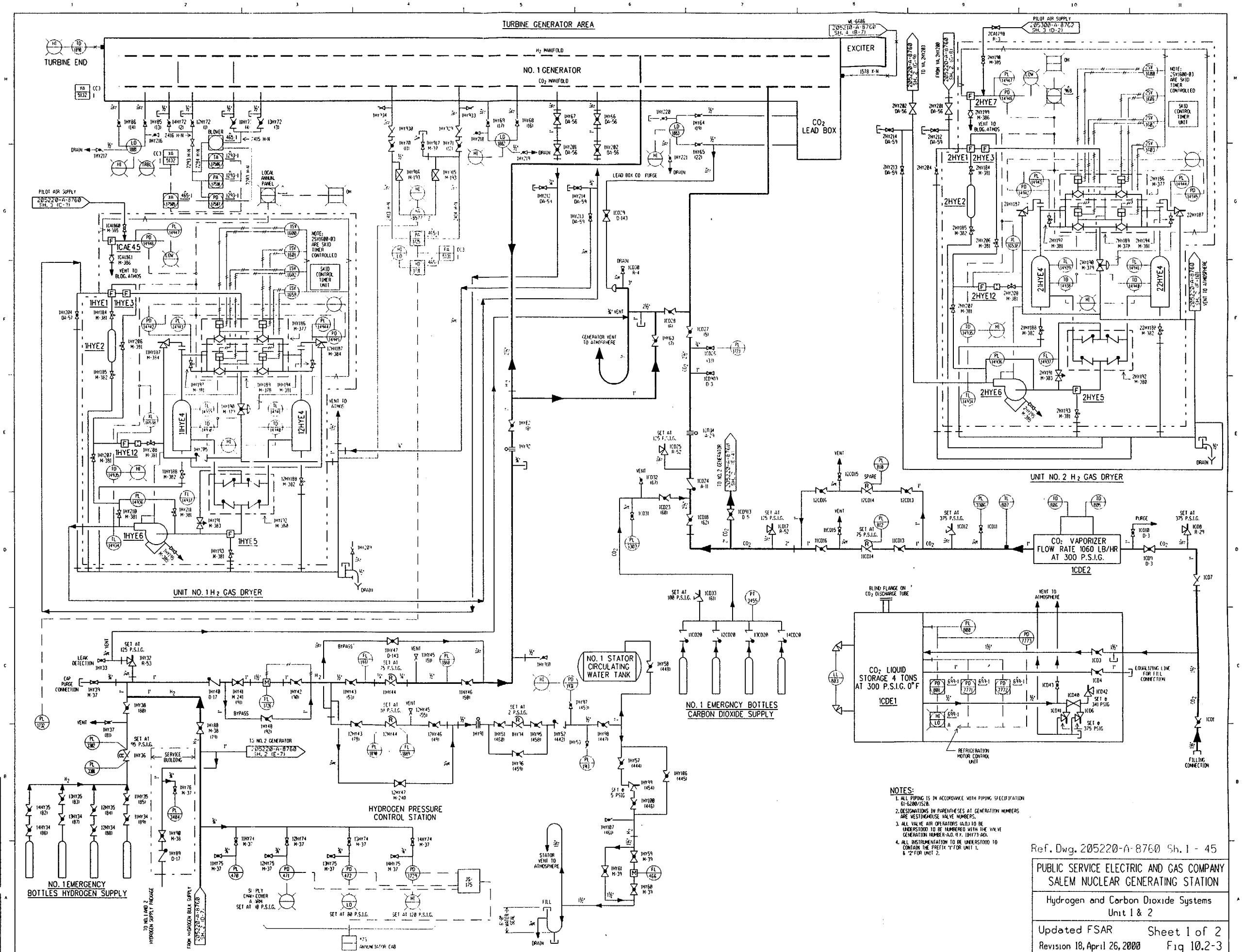
TURBINE GENERATOR AREA
TURBINE END
NO. 1 GENERATOR
EXCITER
CO2 LEAD BOX
UNIT NO. 1 H2 GAS DRYER
UNIT NO. 2 H2 GAS DRYER
CO2 VAPORIZER FLOW RATE 1060 LB/HR AT 300 P.S.I.G.
1CDE2
CO2 LIQUID STORAGE 4 TONS AT 300 P.S.I.G. 0°F
1CDE1
NO. 1 STATOR CIRCULATING WATER TANK
NO. 1 EMERGNCY BOTTLES CARBON DIOXIDE SUPPLY
HYDROGEN PRESSURE CONTROL STATION
NO. 1 EMERGENCY BOTTLES HYDROGEN SUPPLY
NOTES:
1. ALL PIPING IS IN ACCORDANCE WITH PIPING SPECIFICATION 61-6200/1520.
2. DESIGNATIONS IN PARENTHESES AT GENERATION NUMBERS ARE VESTINGHOUSE VALVE NUMBERS.
3. ALL VALVE AIR OPERATORS (A.O.) TO BE UNDERSTOOD TO BE NUMBERED WITH THE VALVE GENERATION NUMBER-A.O. (E.X. 1HY73-A0).
4. ALL INSTRUMENTATION TO BE UNDERSTOOD TO CONTAIN THE PREFIX "1" FOR UNIT 1, & "2" FOR UNIT 2.
Ref. Dwg. 205220-A-8760 Sh. 1 - 45
PUBLIC SERVICE ELECTRIC AND GAS COMPANY
SALEM NUCLEAR GENERATING STATION
Hydrogen and Carbon Dioxide Systems
Unit 1 & 2
Updated FSAR
Sheet 1 of 2
Revision 18, April 26, 2000
Fig 10.2-3

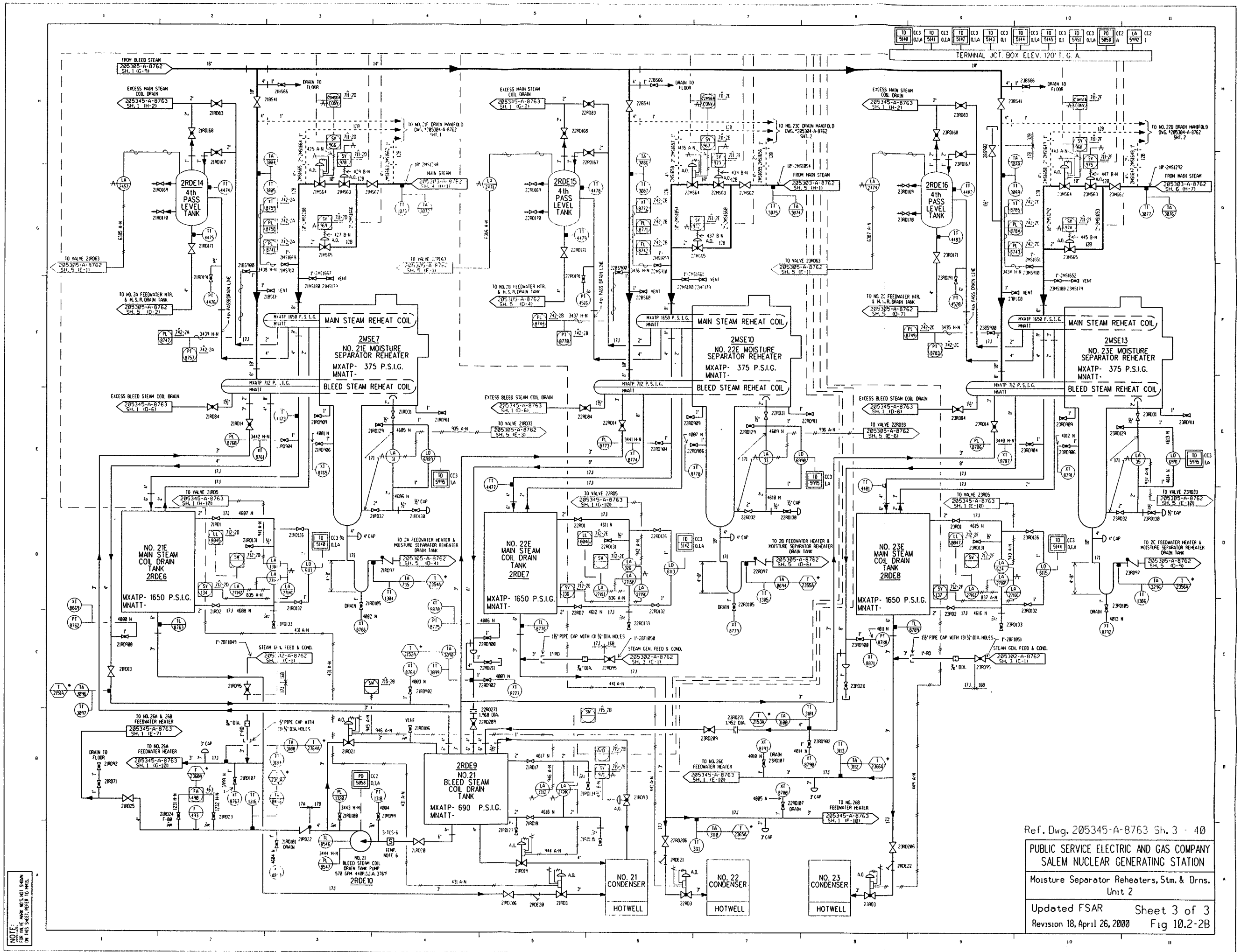

Ref. Dwg. 205345-A-8763 Sh. 3 - 40

PUBLIC SERVICE ELECTRIC AND GAS COMPANY
SALEM NUCLEAR GENERATING STATION

Moisture Separator Reheaters, Stm. & Drns.
Unit 2

Updated FSAR
Revision 18, April 26, 2000

Sheet 3 of 3
Fig 10.2-2B

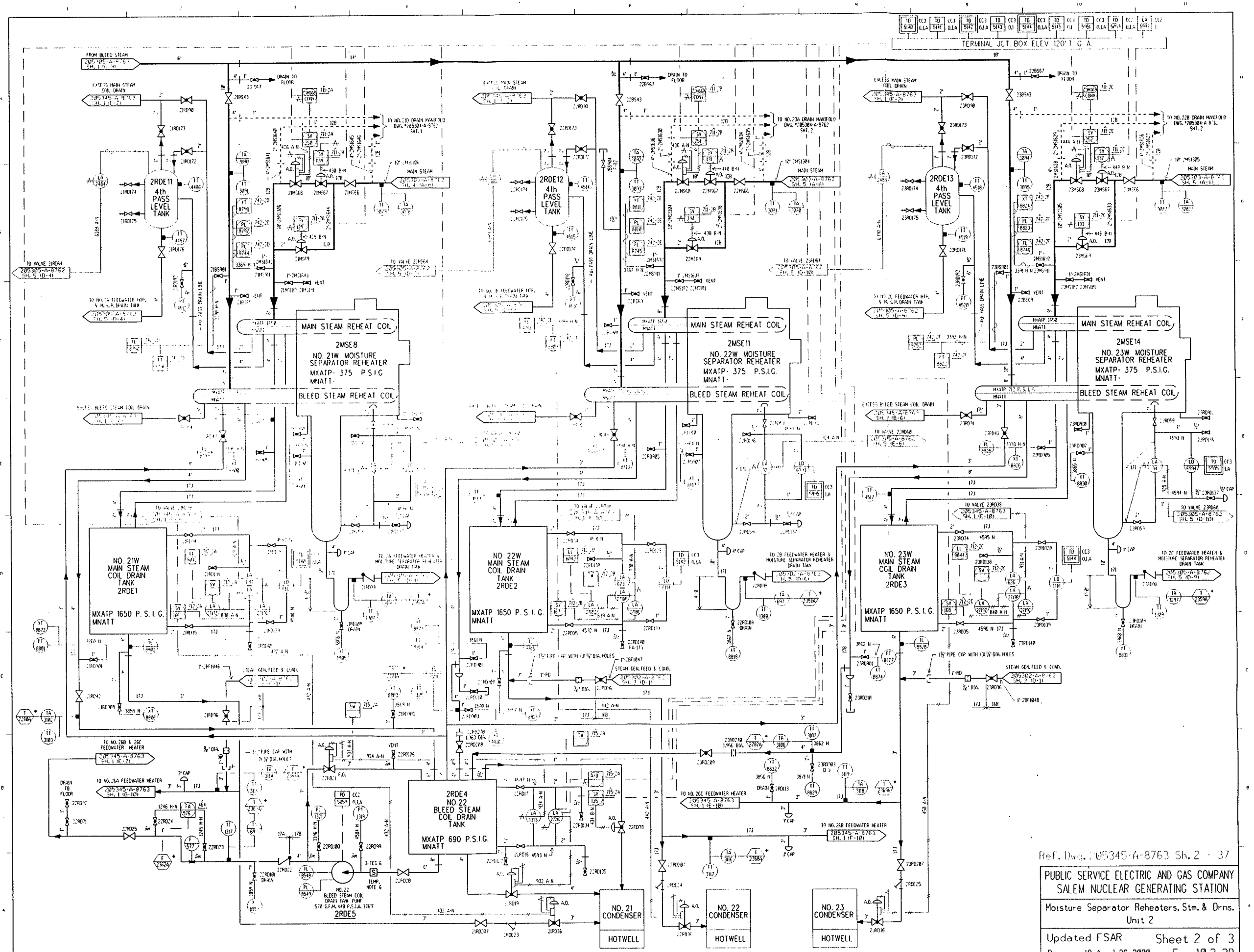

NOTE: FOR VALVE MARK NOS NOT SHOWN ON THIS SHEET, REFER TO MMS.

Ref. Dwg. 205345-A-8763 Sh. 2 - 37

PUBLIC SERVICE ELECTRIC AND GAS COMPANY
SALEM NUCLEAR GENERATING STATION

Moisture Separator Reheaters, Stm. & Drns.
Unit 2

Updated FSAR — Sheet 2 of 3
Revision 18, April 26, 2000 — Fig 10.2-2B

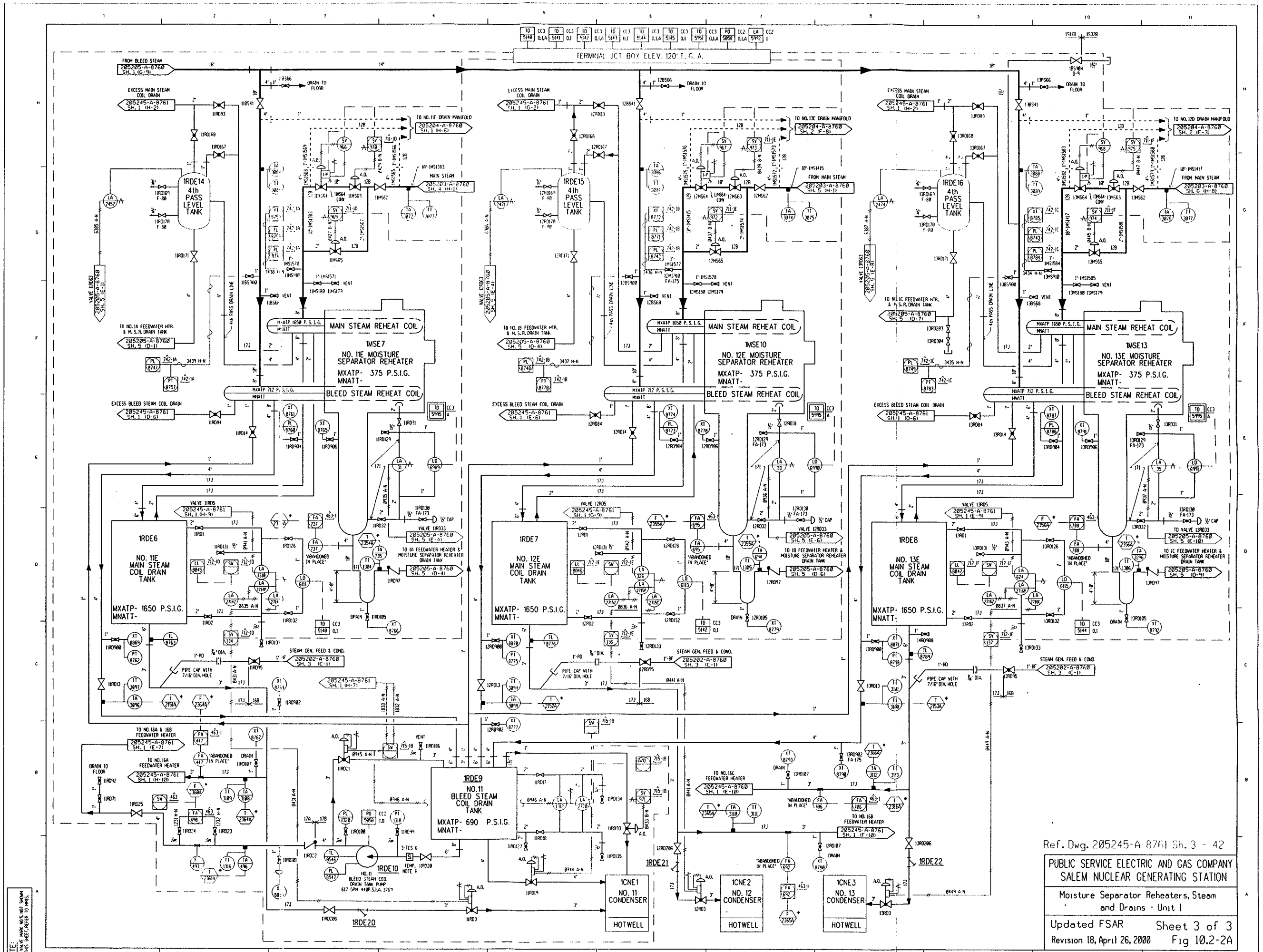

Ref. Dwg. 205245-A 8761 Sh. 3 - 42

PUBLIC SERVICE ELECTRIC AND GAS COMPANY
SALEM NUCLEAR GENERATING STATION

Moisture Separator Reheaters, Steam and Drains - Unit 1

Updated FSAR Sheet 3 of 3
Revision 18, April 26, 2000 Fig 10.2-2A

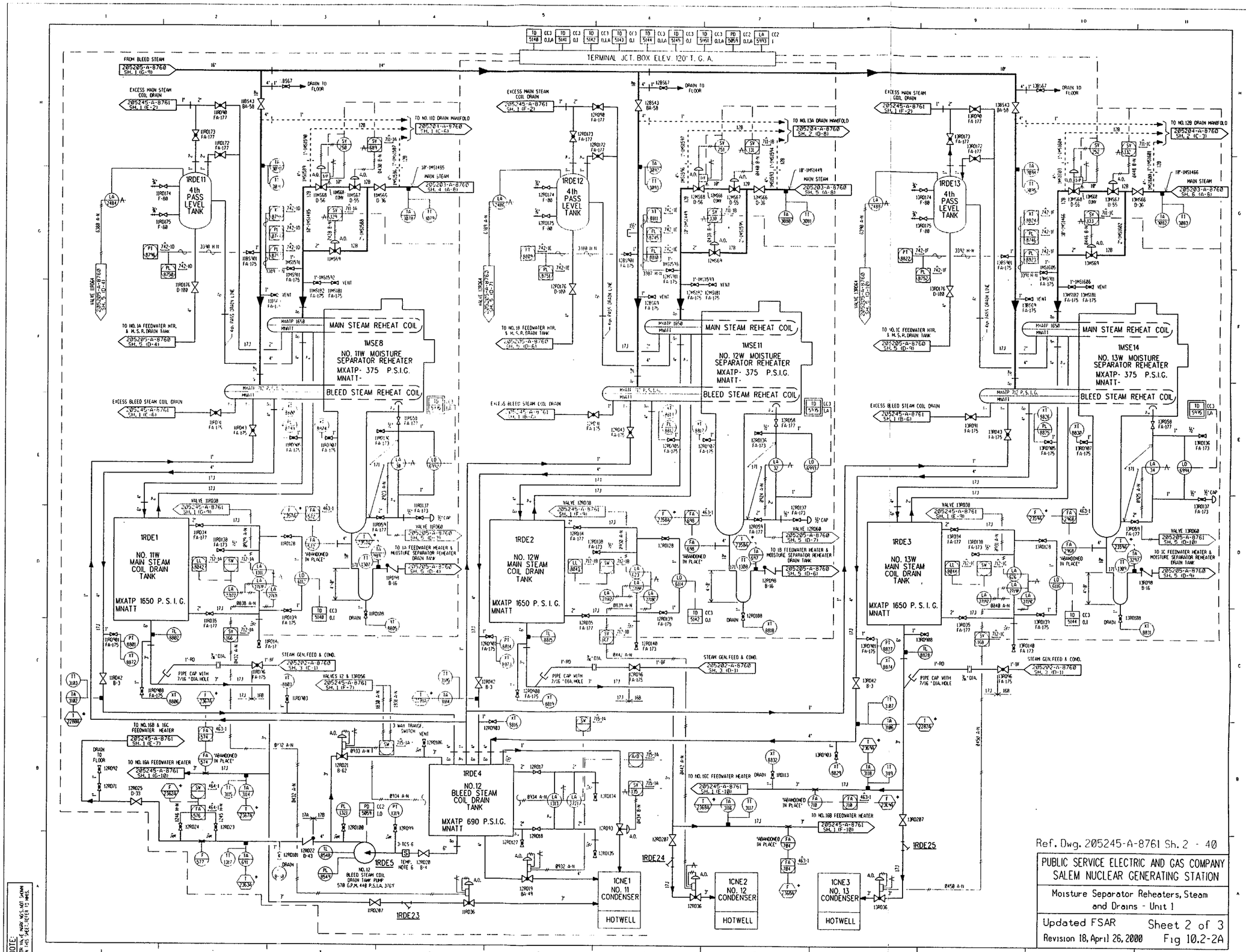

Ref. Dwg. 205245-A-8761 Sh. 2 - 40

PUBLIC SERVICE ELECTRIC AND GAS COMPANY
SALEM NUCLEAR GENERATING STATION

Moisture Separator Reheaters, Steam and Drains - Unit 1

Updated FSAR Sheet 2 of 3
Revision 18, April 26, 2000 Fig 10.2-2A

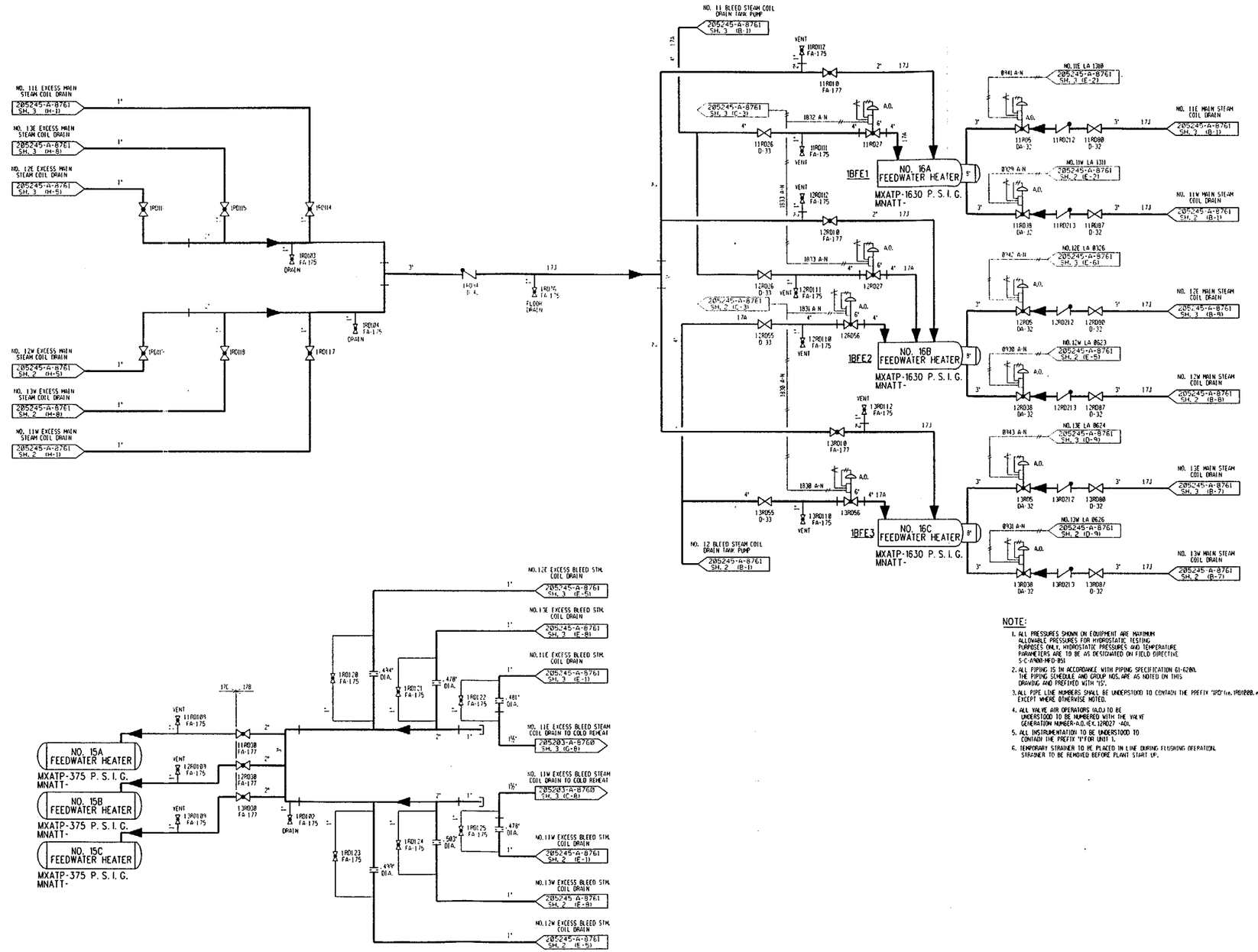

NOTE:

1. ALL PRESSURES SHOWN ON EQUIPMENT ARE MAXIMUM ALLOWABLE PRESSURES FOR HYDROSTATIC TESTING PURPOSES ONLY. HYDROSTATIC PRESSURES AND TEMPERATURE PARAMETERS ARE TO BE AS DESIGNATED ON FIELD DIRECTIVE S-C-A900-MFD-851
2. ALL PIPING IS IN ACCORDANCE WITH PIPING SPECIFICATION G1-6200. THE PIPING SCHEDULE AND GROUP NOS. ARE AS NOTED ON THIS DRAWING AND PREFIXED WITH "1S".
3. ALL PIPE LINE NUMBERS SHALL BE UNDERSTOOD TO CONTAIN THE PREFIX "1RD" (ie. 1RD1000, etc.) EXCEPT WHERE OTHERWISE NOTED.
4. ALL VALVE AIR OPERATORS (A.O.) TO BE UNDERSTOOD TO BE NUMBERED WITH THE VALVE GENERATION NUMBER-A.O. (EX. 12RD27 -AO).
5. ALL INSTRUMENTATION TO BE UNDERSTOOD TO CONTAIN THE PREFIX "1" FOR UNIT 1.
6. TEMPORARY STRAINER TO BE PLACED IN LINE DURING FLUSHING OPERATION. STRAINER TO BE REMOVED BEFORE PLANT START UP.

Ref. Dwg. 205245-A-8761 Sh. 1 - 35

PUBLIC SERVICE ELECTRIC AND GAS COMPANY
SALEM NUCLEAR GENERATING STATION

Moisture Separator Reheaters, Steam and Drains - Unit 1

Updated FSAR — Sheet 1 of 3
Revision 18, April 26, 2000 — Fig 10.2-2A

NOTE: FOR VALVE MARK NOS. NOT SHOWN ON THIS SHEET, REFER TO MMS.

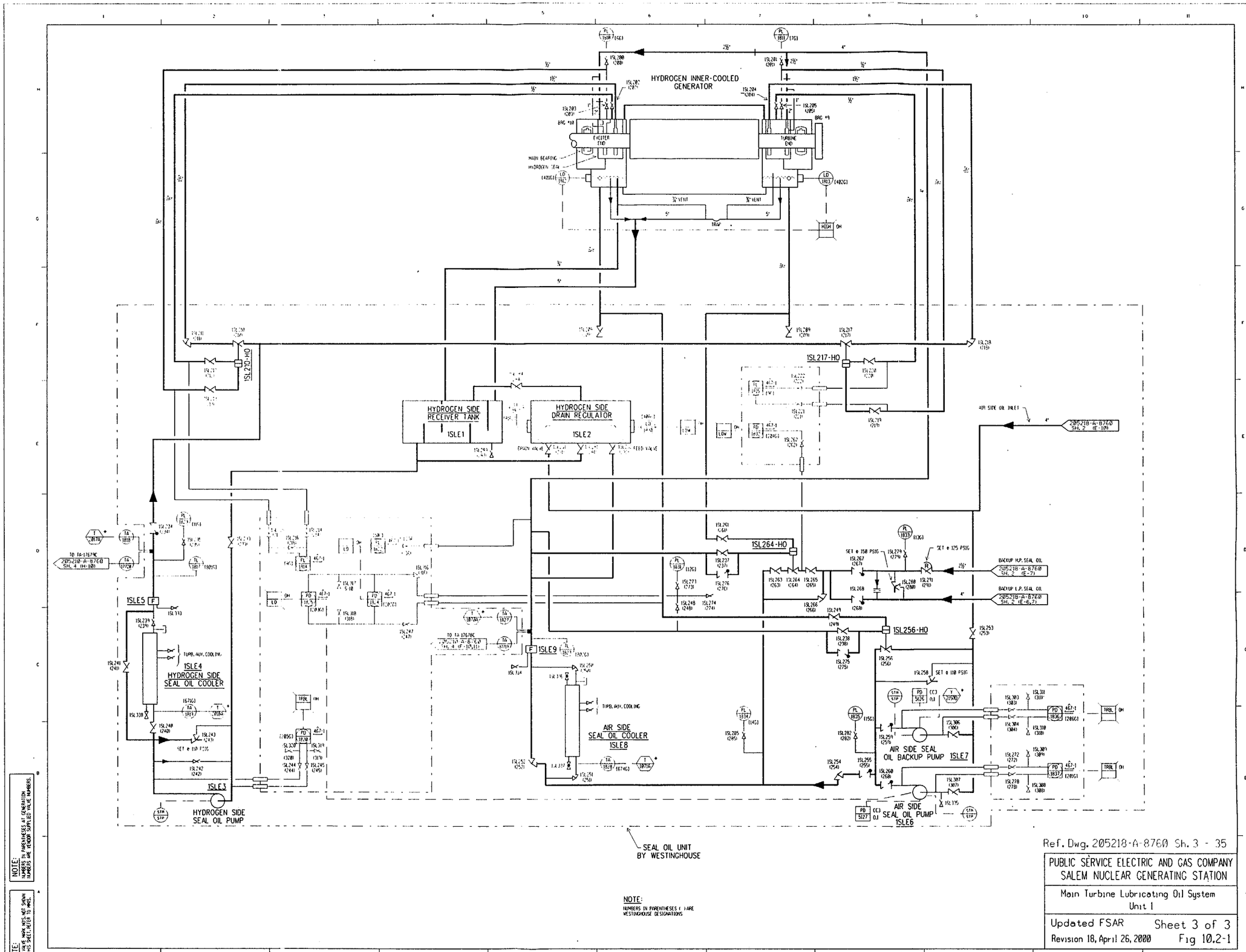

Ref. Dwg. 205218-A-8760 Sh. 3 - 35

PUBLIC SERVICE ELECTRIC AND GAS COMPANY
SALEM NUCLEAR GENERATING STATION

Main Turbine Lubricating Oil System
Unit 1

Updated FSAR Sheet 3 of 3
Revision 18, April 26, 2000 Fig 10.2-1

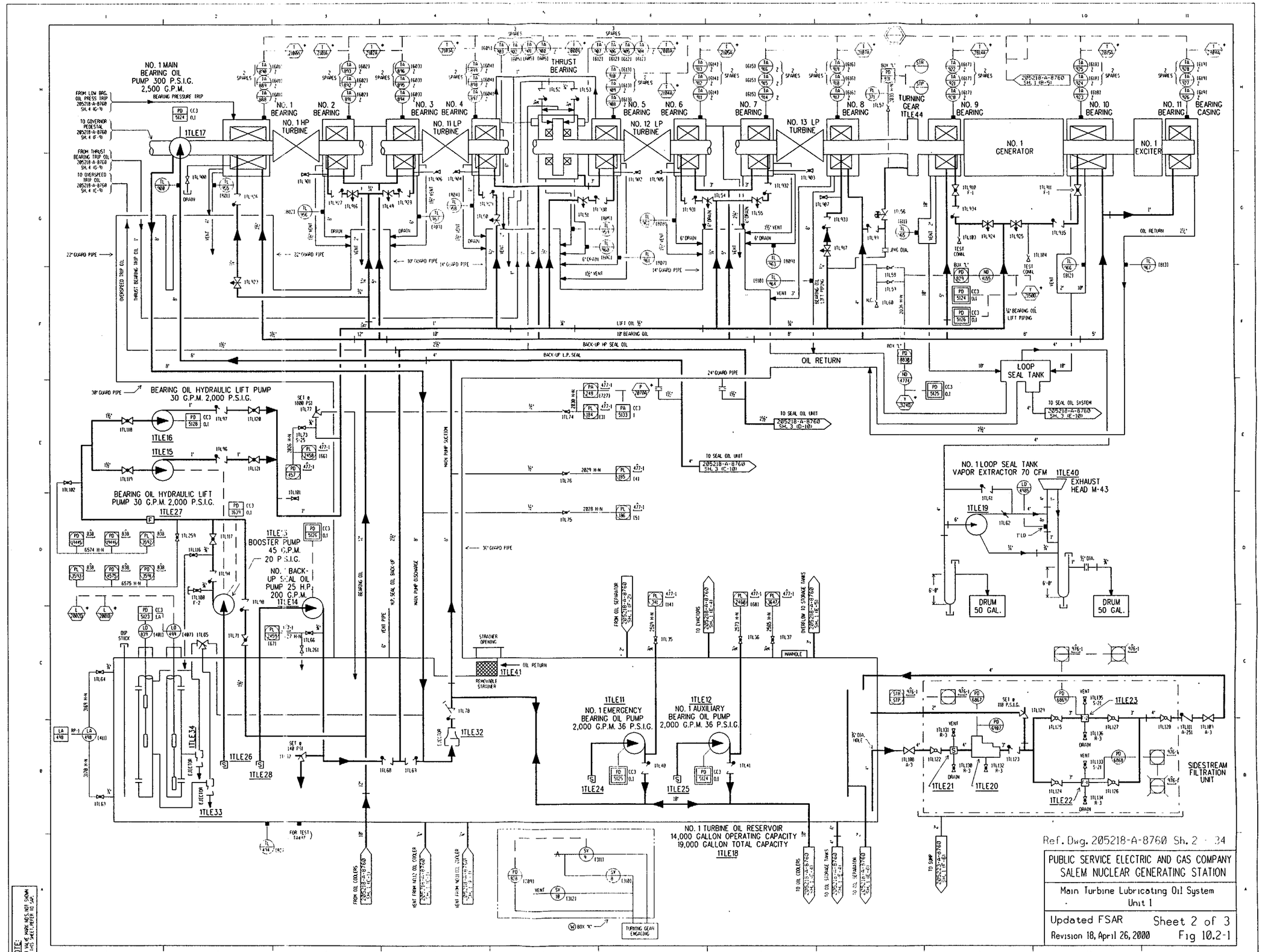

NOTE: FOR VALVE MARK NOS. NOT SHOWN ON THIS SHEET, REFER TO SAR.

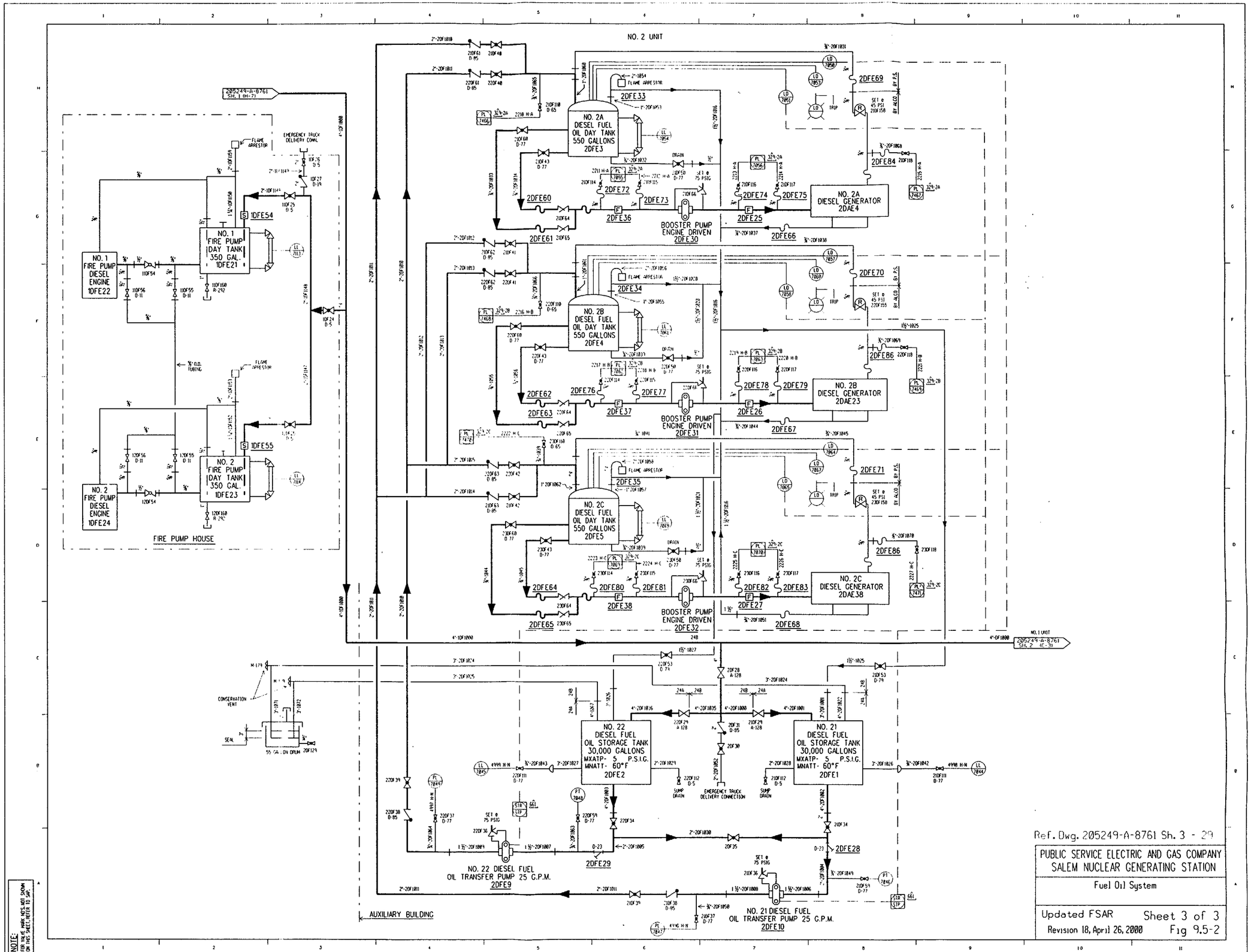

Ref. Dwg. 205249-A-8761 Sh. 3 - 29

PUBLIC SERVICE ELECTRIC AND GAS COMPANY
SALEM NUCLEAR GENERATING STATION

Fuel Oil System

Updated FSAR Sheet 3 of 3
Revision 18, April 26, 2000 Fig 9.5-2

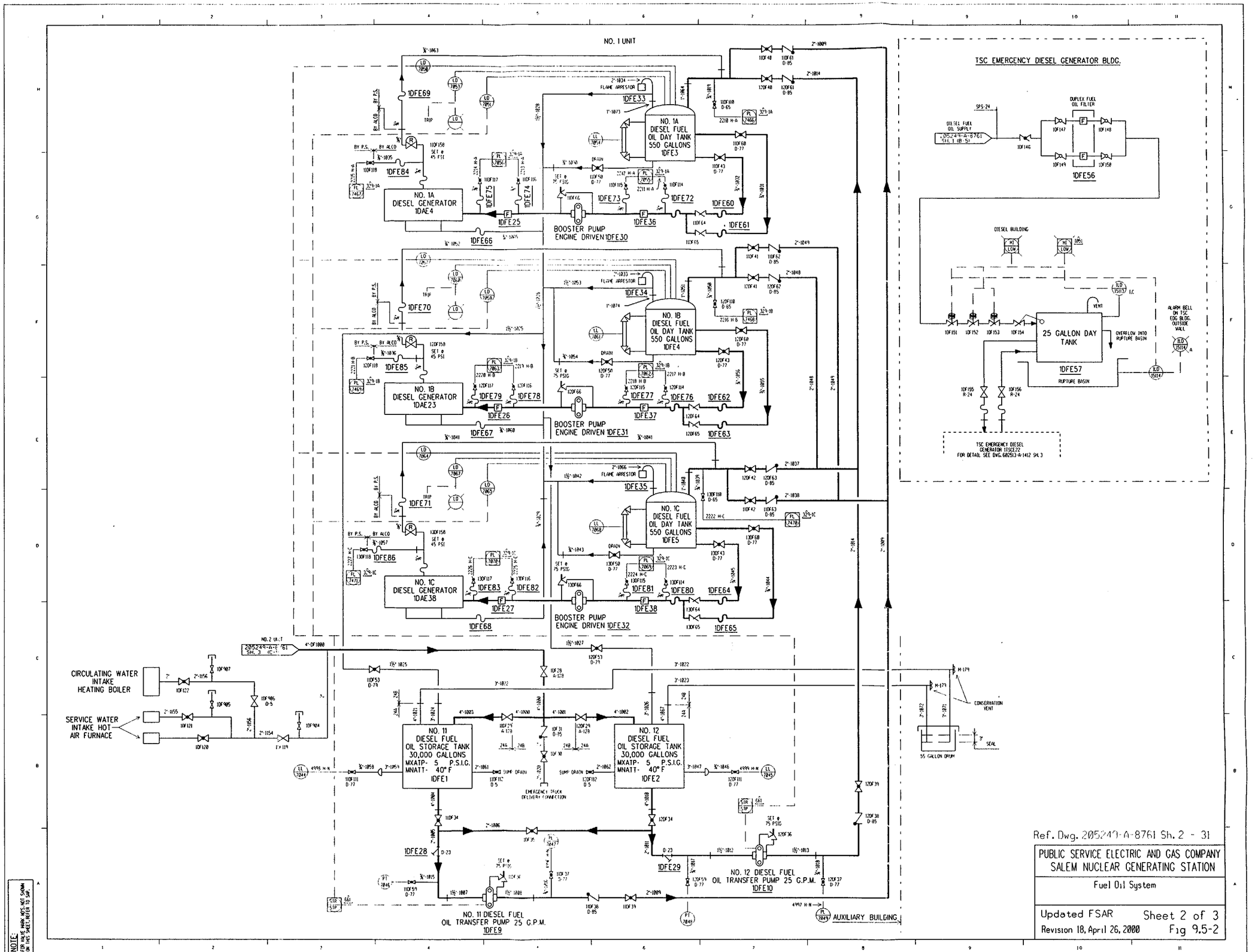

Ref. Dwg. 205249-A-8761 Sh. 2 - 31

PUBLIC SERVICE ELECTRIC AND GAS COMPANY
SALEM NUCLEAR GENERATING STATION

Fuel Oil System

Updated FSAR Sheet 2 of 3
Revision 18, April 26, 2000 Fig 9.5-2

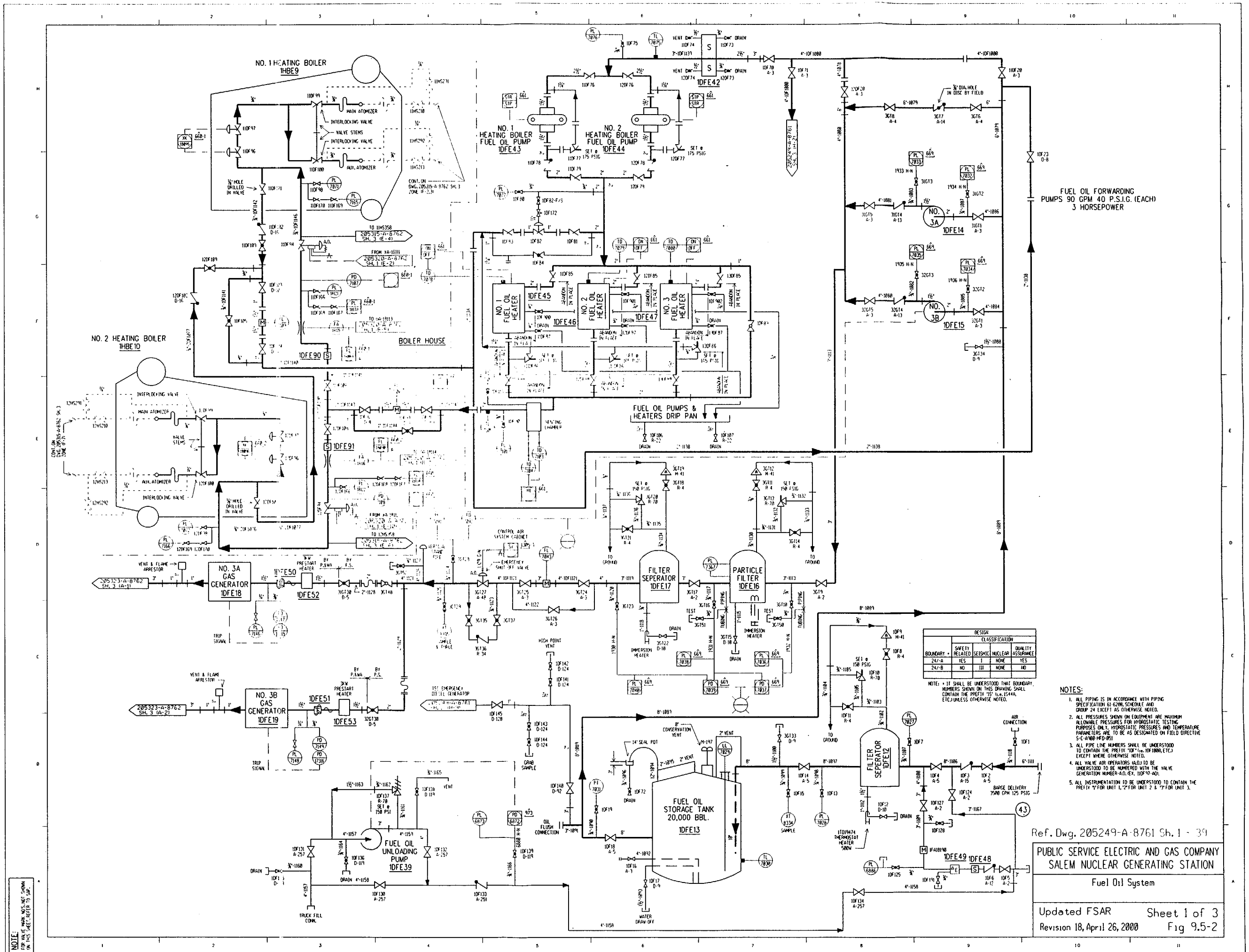
NO. 1 HEATING BOILER
1HBE9
NO. 2 HEATING BOILER
1HBE10
BOILER HOUSE
NO. 1 HEATING BOILER FUEL OIL PUMP
1DFE43
NO. 2 HEATING BOILER FUEL OIL PUMP
1DFE44
1DFE42
NO. 1 FUEL OIL HEATER
1DFE45
1DFE46
NO. 2 FUEL OIL HEATER
1DFE47
NO. 3 FUEL OIL HEATER
FUEL OIL PUMPS & HEATERS DRIP PAN
FUEL OIL FORWARDING PUMPS 90 GPM 40 P.S.I.G. (EACH) 3 HORSEPOWER
NO. 3A
1DFE14
NO. 3B
1DFE15
1DFE90
1DFE91
NO. 3A GAS GENERATOR
1DFE18
1DFE50
1DFE52
NO. 3B GAS GENERATOR
1DFE19
1DFE51
1DFE53
FILTER SEPERATOR
1DFE17
PARTICLE FILTER
1DFE16
FILTER SEPERATOR
1DFE12
FUEL OIL STORAGE TANK 20,000 BBL.
1DFE13
FUEL OIL UNLOADING PUMP
1DFE39
1DFE49
1DFE48
BARGE DELIVERY 3500 GPM 125 PSIG
AIR CONNECTION
WATER DRAW-OFF
TRUCK FILL CONN.
OIL FLUSH CONNECTION
GRAB SAMPLE
HIGH POINT VENT
1ST EMERGENCY DIESEL GENERATOR
CONTROL AIR SYSTEM CABINET
EMERGENCY SHUT OFF VALVE
8" CONSERVATION VENT
14" SEAL POT
2" VENT
VENT & FLAME ARRESTOR
3KW PRESTART HEATER
TRIP SIGNAL
IMMERSION HEATER
TO GROUND
DESIGN CLASSIFICATION
BOUNDARY *
SAFETY RELATED
SEISMIC
NUCLEAR
QUALITY ASSURANCE
24/-A YES I NONE YES
24/-B NO III NONE NO
NOTE: * IF SHALL BE UNDERSTOOD THAT BOUNDARY NUMBERS SHOWN ON THIS DRAWING SHALL CONTAIN THE PREFIX "25" (i.e. 1544A, ETC.) UNLESS OTHERWISE NOTED.
NOTES:
1. ALL PIPING IS IN ACCORDANCE WITH PIPING SPECIFICATION G1 6200, SCHEDULE AND GROUP 24 EXCEPT AS OTHERWISE NOTED.
2. ALL PRESSURES SHOWN ON EQUIPMENT ARE MAXIMUM ALLOWABLE PRESSURES FOR HYDROSTATIC TESTING PURPOSES ONLY. HYDROSTATIC PRESSURES AND TEMPERATURE PARAMETERS ARE TO BE AS DESIGNATED ON FIELD DIRECTIVE S-C-A988-MFD-095
3. ALL PIPE LINE NUMBERS SHALL BE UNDERSTOOD TO CONTAIN THE PREFIX "10" (i.e. 10FB00, ETC.) EXCEPT WHERE OTHERWISE NOTED.
4. ALL VALVE AIR OPERATORS (A.O.) TO BE UNDERSTOOD TO BE NUMBERED WITH THE VALVE GENERATION NUMBER-A.O. (E.G. 10DF-97-AO).
5. ALL INSTRUMENTATION TO BE UNDERSTOOD TO CONTAIN THE PREFIX "1" FOR UNIT 1, "2" FOR UNIT 2 & "3" FOR UNIT 3.
NOTE: FOR VALVE MARK NOS. NOT SHOWN IN NUS SPECIFICATION SEE SPP.
Ref. Dwg. 205249-A-8761 Sh. 1 - 39
PUBLIC SERVICE ELECTRIC AND GAS COMPANY
SALEM NUCLEAR GENERATING STATION
Fuel Oil System
Updated FSAR
Sheet 1 of 3
Revision 18, April 26, 2000
Fig 9.5-2

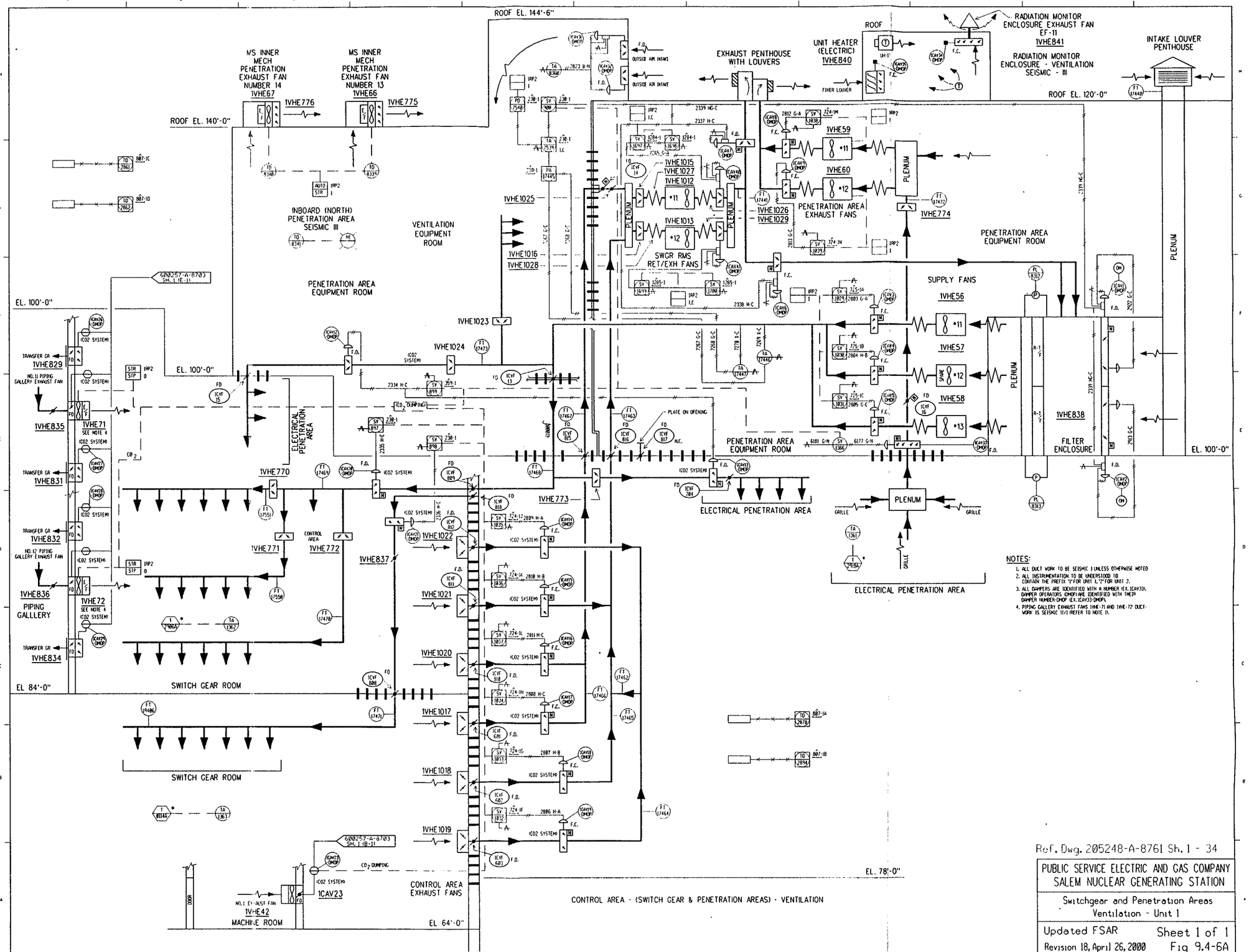
ROOF EL. 144'-6"
ROOF EL. 140'-0"
ROOF EL. 120'-0"
MS INNER MECH PENETRATION EXHAUST FAN NUMBER 14
1VHE67
MS INNER MECH PENETRATION EXHAUST FAN NUMBER 13
1VHE66
1VHE776
1VHE775
EXHAUST PENTHOUSE WITH LOUVERS
UNIT HEATER (ELECTRIC)
1VHE840
ROOF
RADIATION MONITOR ENCLOSURE EXHAUST FAN EF-11
1VHE841
RADIATION MONITOR ENCLOSURE - VENTILATION SEISMIC - III
INTAKE LOUVER PENTHOUSE
INBOARD (NORTH) PENETRATION AREA SEISMIC III
VENTILATION EQUIPMENT ROOM
PENETRATION AREA EQUIPMENT ROOM
1VHE1025
1VHE1016
1VHE1028
1VHE1015
1VHE1027
1VHE1012
1VHE1013
SWGR RMS RET/EXH FANS
1VHE59
1VHE60
1VHE1026
1VHE1029
PENETRATION AREA EXHAUST FANS
1VHE774
PLENUM
SUPPLY FANS
1VHE56
1VHE57
1VHE58
1VHE838
FILTER ENCLOSURE
EL. 100'-0"
1VHE1023
1VHE1024
ELECTRICAL PENETRATION AREA
1VHE770
1VHE771
CONTROL AREA
1VHE772
1VHE837
1VHE773
1VHE1022
1VHE1021
1VHE1020
1VHE1017
1VHE1018
1VHE1019
TRANSFER GR
1VHE829
1VHE835
1VHE831
1VHE832
1VHE836
1VHE834
NO. 11 PIPING GALLERY EXHAUST FAN
NO. 12 PIPING GALLERY EXHAUST FAN
1VHE71
1VHE72
SEE NOTE 4
PIPING GALLLERY
EL 84'-0"
SWITCH GEAR ROOM
EL. 78'-0"
CONTROL AREA EXHAUST FANS
1CAV23
1VHE42
MACHINE ROOM
EL 64'-0"
CONTROL AREA - (SWITCH GEAR & PENETRATION AREAS) - VENTILATION
GRILLE
NOTES:
1. ALL DUCT WORK TO BE SEISMIC I UNLESS OTHERWISE NOTED
2. ALL INSTRUMENTATION TO BE UNDERSTOOD TO CONTAIN THE PREFIX "1" FOR UNIT 1, "2" FOR UNIT 2.
3. ALL DAMPERS ARE IDENTIFIED WITH A NUMBER (EX. 1CAV33). DAMPER OPERATORS (DMOP) ARE IDENTIFIED WITH THEIR DAMPER NUMBER-DMOP (EX. 1CAV33-DMOP).
4. PIPING GALLERY EXHAUST FANS 1VHE-71 AND 1VHE-72 DUCTWORK IS SEISMIC II/I (REFER TO NOTE 1).
Ref. Dwg. 205248-A-8761 Sh. 1 - 34
PUBLIC SERVICE ELECTRIC AND GAS COMPANY
SALEM NUCLEAR GENERATING STATION
Switchgear and Penetration Areas
Ventilation - Unit 1
Updated FSAR
Revision 18, April 26, 2000
Sheet 1 of 1
Fig 9.4-6A

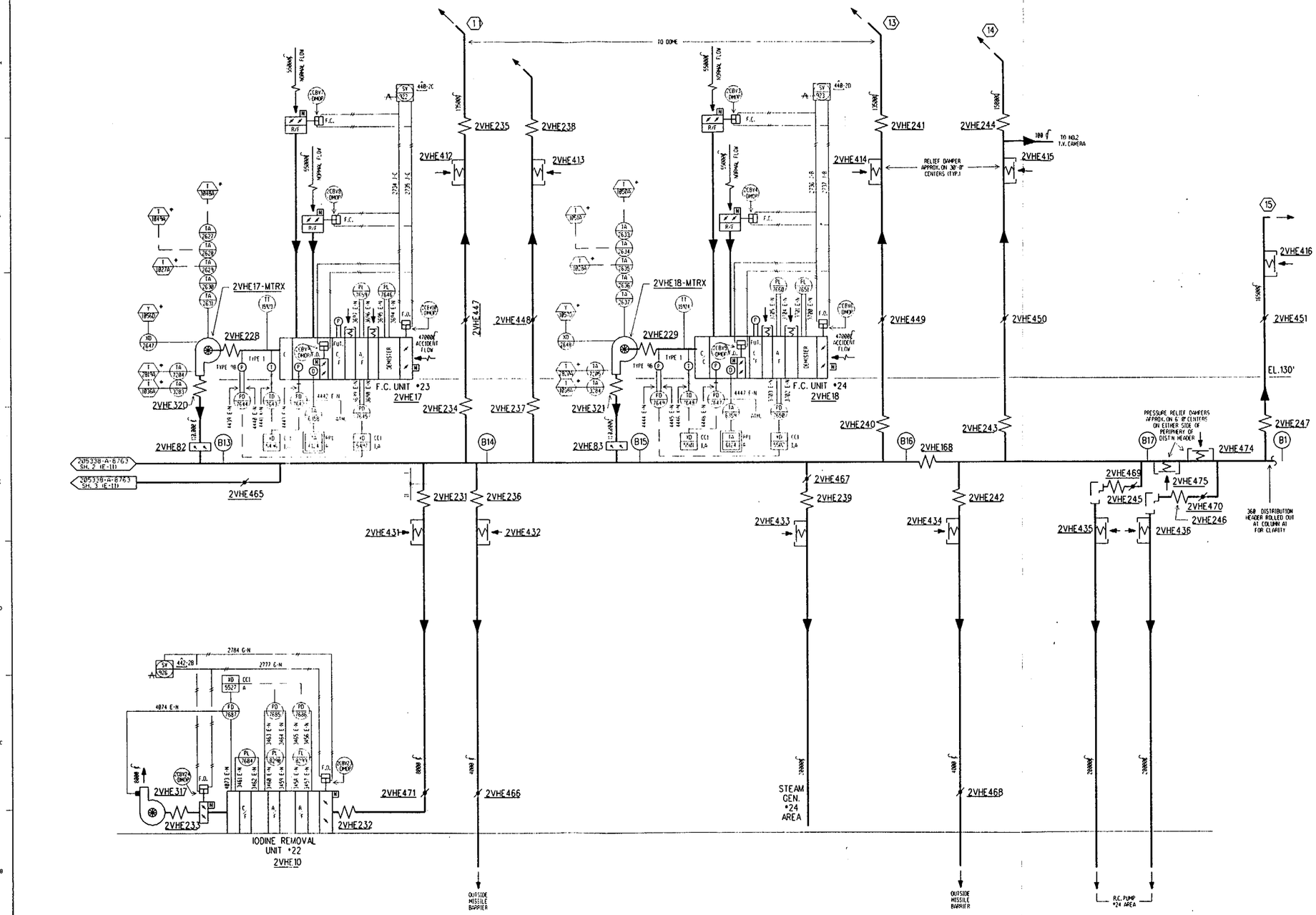

Ref. Dwg. 205338-A-8763 Sh. 3 - 22

PUBLIC SERVICE ELECTRIC AND GAS COMPANY SALEM NUCLEAR GENERATING STATION
Reactor Containment - Ventilation Unit 2
Updated FSAR Sheet 3 of 3 Revision 18, April 26, 2000 Fig 9.4-4B

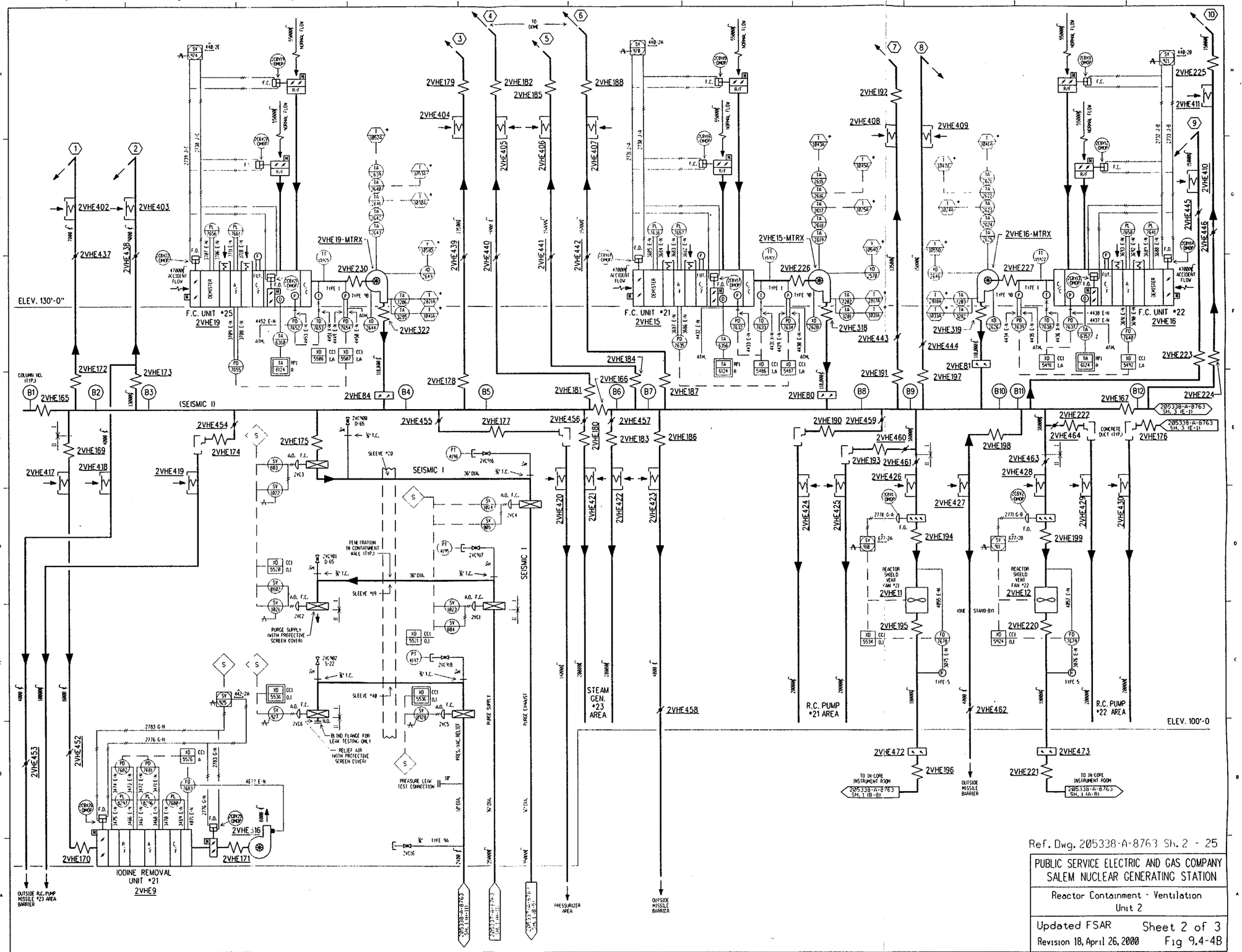

Ref. Dwg. 205338-A-8763 Sh. 2 - 25

PUBLIC SERVICE ELECTRIC AND GAS COMPANY
SALEM NUCLEAR GENERATING STATION

Reactor Containment - Ventilation
Unit 2

Updated FSAR Sheet 2 of 3
Revision 18, April 26, 2000 Fig 9.4-4B

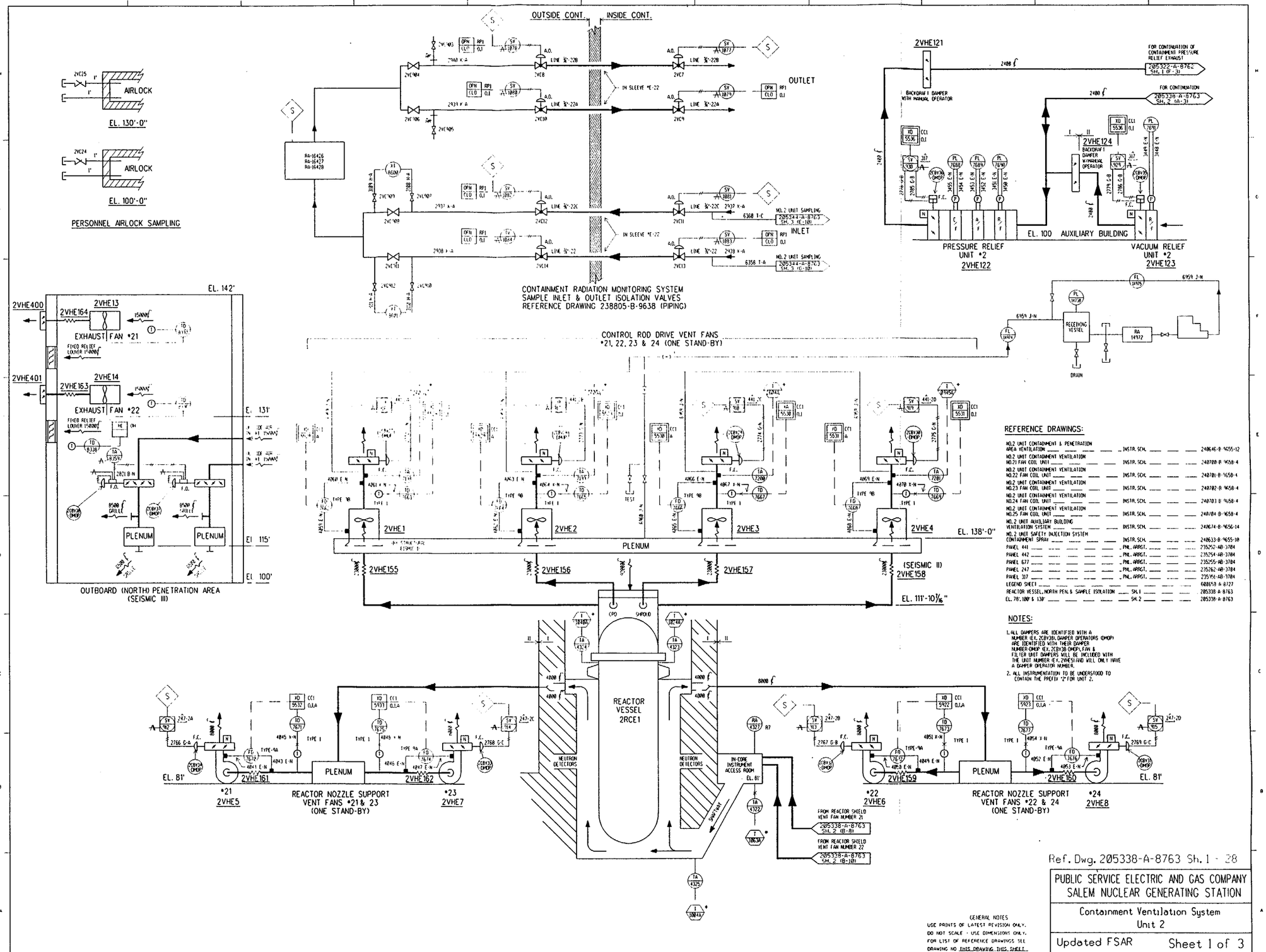

REFERENCE DRAWINGS:

NO.2 UNIT CONTAINMENT & PENETRATION AREA VENTILATION	INSTR. SCH.	240646-B-9655-12
NO.2 UNIT CONTAINMENT VENTILATION NO.21 FAN COIL UNIT	INSTR. SCH.	240700-B-9658-4
NO.2 UNIT CONTAINMENT VENTILATION NO.22 FAN COIL UNIT	INSTR. SCH.	240701-B-9658-4
NO.2 UNIT CONTAINMENT VENTILATION NO.23 FAN COIL UNIT	INSTR. SCH.	240702-B-9658-4
NO.2 UNIT CONTAINMENT VENTILATION NO.24 FAN COIL UNIT	INSTR. SCH.	240703-B-9658-4
NO.2 UNIT CONTAINMENT VENTILATION NO.25 FAN COIL UNIT	INSTR. SCH.	240704-B-9658-4
NO.2 UNIT AUXILIARY BUILDING VENTILATION SYSTEM	INSTR. SCH.	240674-B-9656-14
NO.2 UNIT SAFETY INJECTION SYSTEM CONTAINMENT SPRAY	INSTR. SCH.	240633-B-9655-10
PANEL 441	PNL. ARRGT.	235252-AB-3704
PANEL 442	PNL. ARRGT.	235254-AB-3704
PANEL 677	PNL. ARRGT.	235255-AB-3704
PANEL 247	PNL. ARRGT.	235262-AB-3704
PANEL 317	PNL. ARRGT.	235151-AB-3704
LEGEND SHEET		608658-A-8727
REACTOR VESSEL, NORTH PEN. & SAMPLE ISOLATION	SH. 1	205338-A-8763
EL. 78', 100' & 130'	SH. 2	205338-A-8763

NOTES:

1. ALL DAMPERS ARE IDENTIFIED WITH A NUMBER (EX. 2CBV38), DAMPER OPERATORS (DMOP) ARE IDENTIFIED WITH THEIR DAMPER NUMBER-DMOP (EX. 2CBV38-DMOP), FAN & FILTER UNIT DAMPERS WILL BE INCLUDED WITH THE UNIT NUMBER (EX. 2VHE5) AND WILL ONLY HAVE A DAMPER OPERATOR NUMBER.
2. ALL INSTRUMENTATION TO BE UNDERSTOOD TO CONTAIN THE PREFIX "2" FOR UNIT 2.

GENERAL NOTES
USE PRINTS OF LATEST REVISION ONLY.
DO NOT SCALE - USE DIMENSIONS ONLY.
FOR LIST OF REFERENCE DRAWINGS SEE DRAWING NO THIS DRAWING THIS SHEET.
THIS DRAWING SUPERSEDES 205338-A-8763-13

Ref. Dwg. 205338-A-8763 Sh. 1 - 28

PUBLIC SERVICE ELECTRIC AND GAS COMPANY
SALEM NUCLEAR GENERATING STATION

Containment Ventilation System
Unit 2

Updated FSAR
Revision 18, April 26, 2000

Sheet 1 of 3
Fig 9.4-4B

NOTE: FOR VALVE MARK NOS. NOT SHOWN ON THIS SHEET, REFER TO MMS.

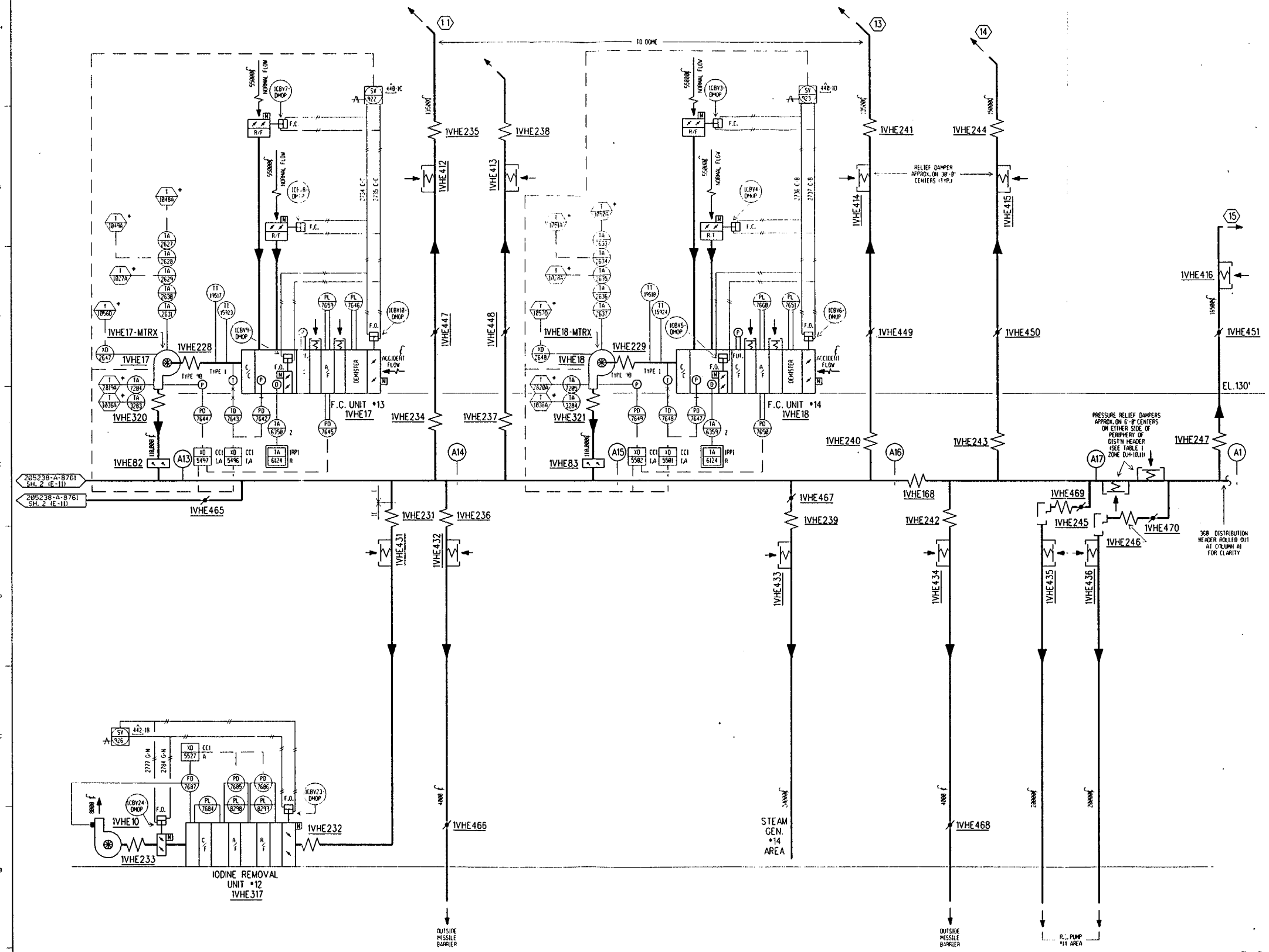

TABLE 1

CONTAINMENT VENTILATION 36B-DEG DISTRIBUTION HEADER PRESSURE RELIEF DAMPERS

COMPONENT ID	AZIMUTH LOCATION	LOCATION DRAWING	FLOW DIRECTION
1VHE-1060	A1-A2	252226	IN
1VHE-1061	A1-A2	252226	OUT
1VHE-1062	A1-A2	252226	IN
1VHE-1063	A2	252226	OUT
1VHE-1064	A2-A3	252226	IN
1VHE-1065	A2-A3	252226	OUT
1VHE-1066	A3-A4	252226	IN
1VHE-1067	A3-A4	252226	OUT
1VHE-1068	A3-A4	252226	IN
1VHE-1069	A3-A4	252226	OUT
1VHE-1070	A4-A5	252226	IN
1VHE-1071	A4-A5	252226	OUT
1VHE-1072	A4-A5	252226	IN
1VHE-1073	A4-A5	252226	OUT
1VHE-1074	A5-A6	252226	IN
1VHE-1075	A5-A6	252223	OUT
1VHE-1076	A6-A7	252223	IN
1VHE-1077	A6-A7	252223	OUT
1VHE-1078	A6-A7	252223	IN
1VHE-1079	A6-A7	252223	OUT
1VHE-1080	A7-A8	252223	IN
1VHE-1081	A7-A8	252223	OUT
1VHE-1082	A7-A8	252223	IN
1VHE-1083	A8-A9	252223	OUT
1VHE-1084	A8-A9	252223	IN
1VHE-1085	A8-A9	252223	OUT
1VHE-1086	A8-A9	252223	IN
1VHE-1087	A9-A10	252223	OUT
1VHE-1088	A9-A10	252223	IN
1VHE-1089	A10-A11	252223	OUT
1VHE-1090	A10-A11	252223	IN
1VHE-1091	A10-A11	252223	OUT
1VHE-1092	A10-A11	252224	IN
1VHE-1093	A11-A12	252224	IN
1VHE-1094	A11-A12	252224	OUT
1VHE-1095	A11-A12	252224	OUT
1VHE-1096	A11-A12	252224	IN
1VHE-1097	A11-A12	252224	IN
1VHE-1098	A12-A13	252224	OUT
1VHE-1099	A12-A13	252224	IN
1VHE-1100	A12-A13	252224	OUT
1VHE-1101	A13-A14	252224	OUT
1VHE-1102	A13-A14	252224	IN
1VHE-1103	A13-A14	252224	OUT
1VHE-1104	A13-A14	252224	IN
1VHE-1105	A14-A15	252224	OUT
1VHE-1106	A14-A15	252224	OUT
1VHE-1107	A14-A15	252224	IN
1VHE-1108	A15-A16	252225	OUT
1VHE-1109	A15-A16	252225	IN
1VHE-1110	A15-A16	252225	OUT
1VHE-1111	A15-A16	252225	IN
1VHE-1112	A16-A17	252225	IN
1VHE-1113	A16-A17	252225	IN
1VHE-1114	A16-A17	252225	IN
1VHE-1115	A17	252225	OUT
1VHE-1116	A17-A18	252225	IN
1VHE-1117	A17-A18	252225	OUT
1VHE-1118	A17-A18	252225	OUT
1VHE-1119	A17-A18	252225	IN
1VHE-1120	A18-A1	252225	OUT
1VHE-1121	A18-A1	252225	OUT
1VHE-1122	A18-A1	252225	OUT
1VHE-1123	A18-A1	252225	IN

Ref. Dwg. 205238-A-8761 Sh. 3 - 31

PUBLIC SERVICE ELECTRIC AND GAS COMPANY
SALEM NUCLEAR GENERATING STATION

Containment Ventilation System
Unit 1

Updated FSAR — Sheet 3 of 3
Revision 18, April 26, 2000 — Fig 9.4-4A

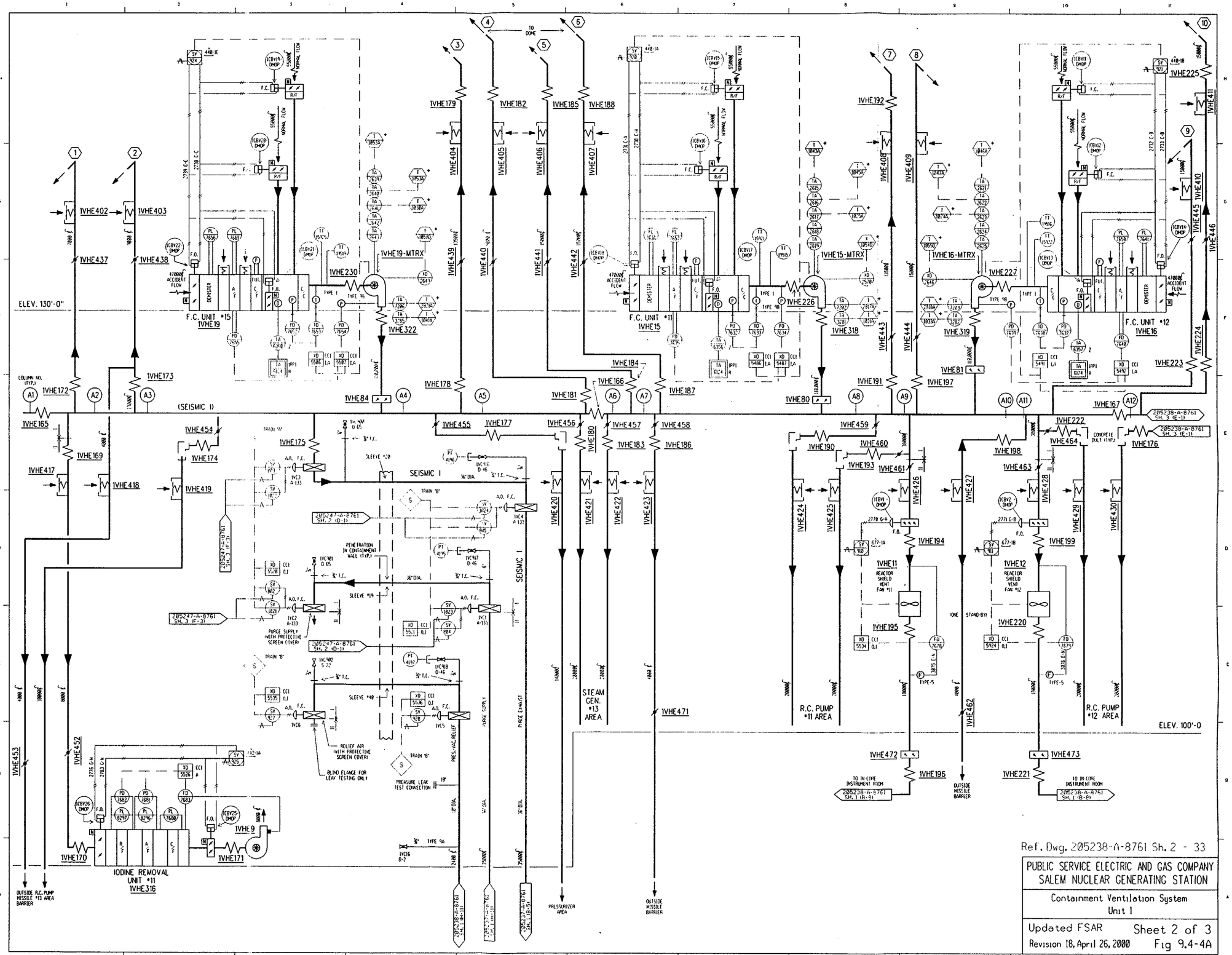

Ref. Dwg. 205238-A-8761 Sh. 2 - 33

PUBLIC SERVICE ELECTRIC AND GAS COMPANY
SALEM NUCLEAR GENERATING STATION

Containment Ventilation System
Unit 1

Updated FSAR Sheet 2 of 3
Revision 18, April 26, 2000 Fig 9.4-4A

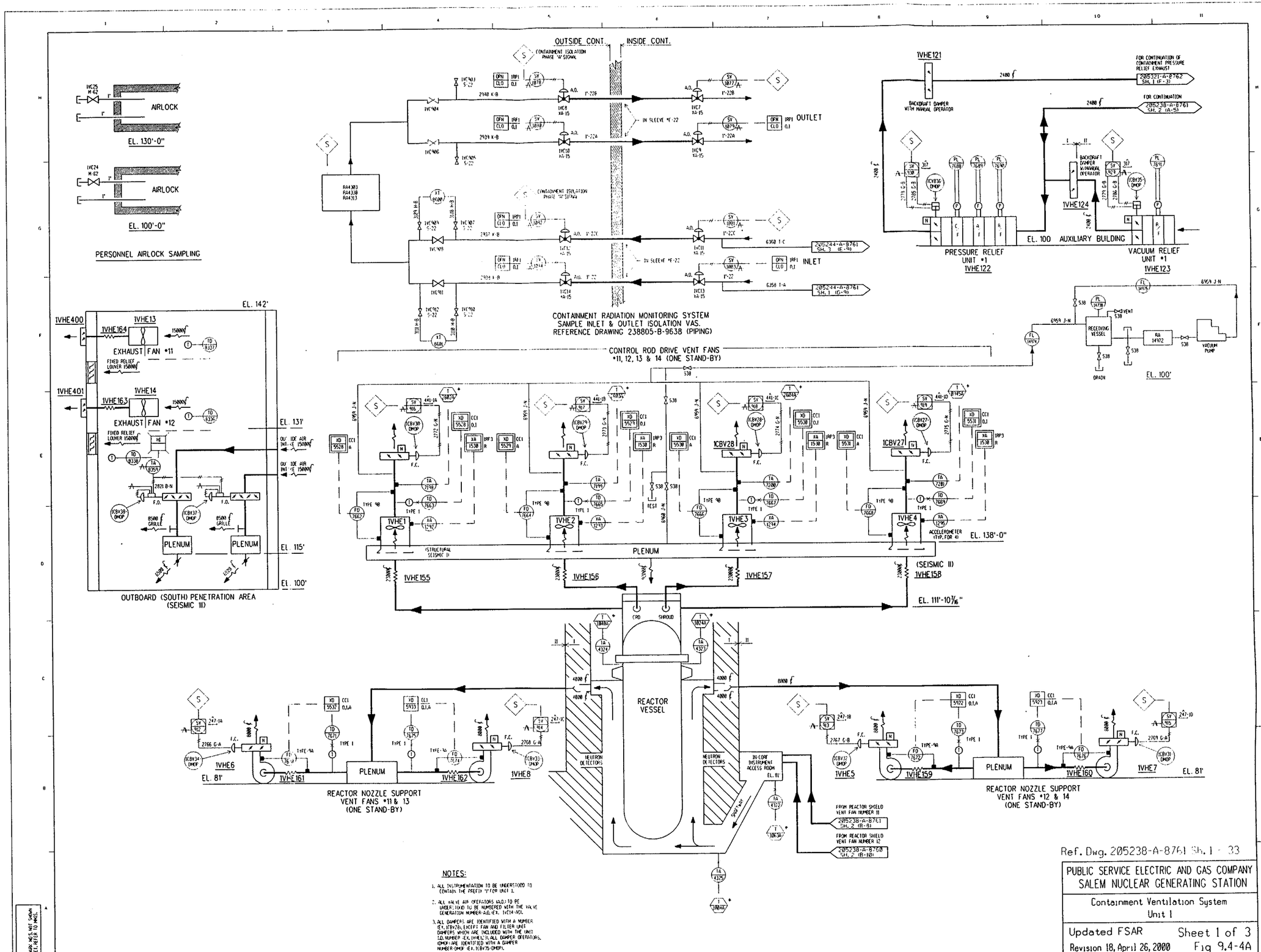

NOTES:

1. ALL INSTRUMENTATION TO BE UNDERSTOOD TO CONTAIN THE PREFIX "1" FOR UNIT 1.
2. ALL VALVE AIR OPERATORS (A.O.) TO BE UNDERSTOOD TO BE NUMBERED WITH THE VALVE GENERATION NUMBER-A.O. (EX. 1VC14-AO).
3. ALL DAMPERS ARE IDENTIFIED WITH A NUMBER (EX. 1CBV28), EXCEPT FAN AND FILTER UNIT DAMPERS WHICH ARE INCLUDED WITH THE UNIT I.D. NUMBER (EX. 1VHE12). ALL DAMPER OPERATORS, (DMOP) ARE IDENTIFIED WITH A DAMPER NUMBER-DMOP (EX. 1CBV35-DMOP).

NOTE: FOR VALVE MARK NOS. NOT SHOWN ON THIS SHEET, REFER TO MMDS.

Ref. Dwg. 205238-A-8761 Sh. 1 - 33

PUBLIC SERVICE ELECTRIC AND GAS COMPANY
SALEM NUCLEAR GENERATING STATION

Containment Ventilation System
Unit 1

Updated FSAR
Revision 18, April 26, 2000

Sheet 1 of 3
Fig 9.4-4A

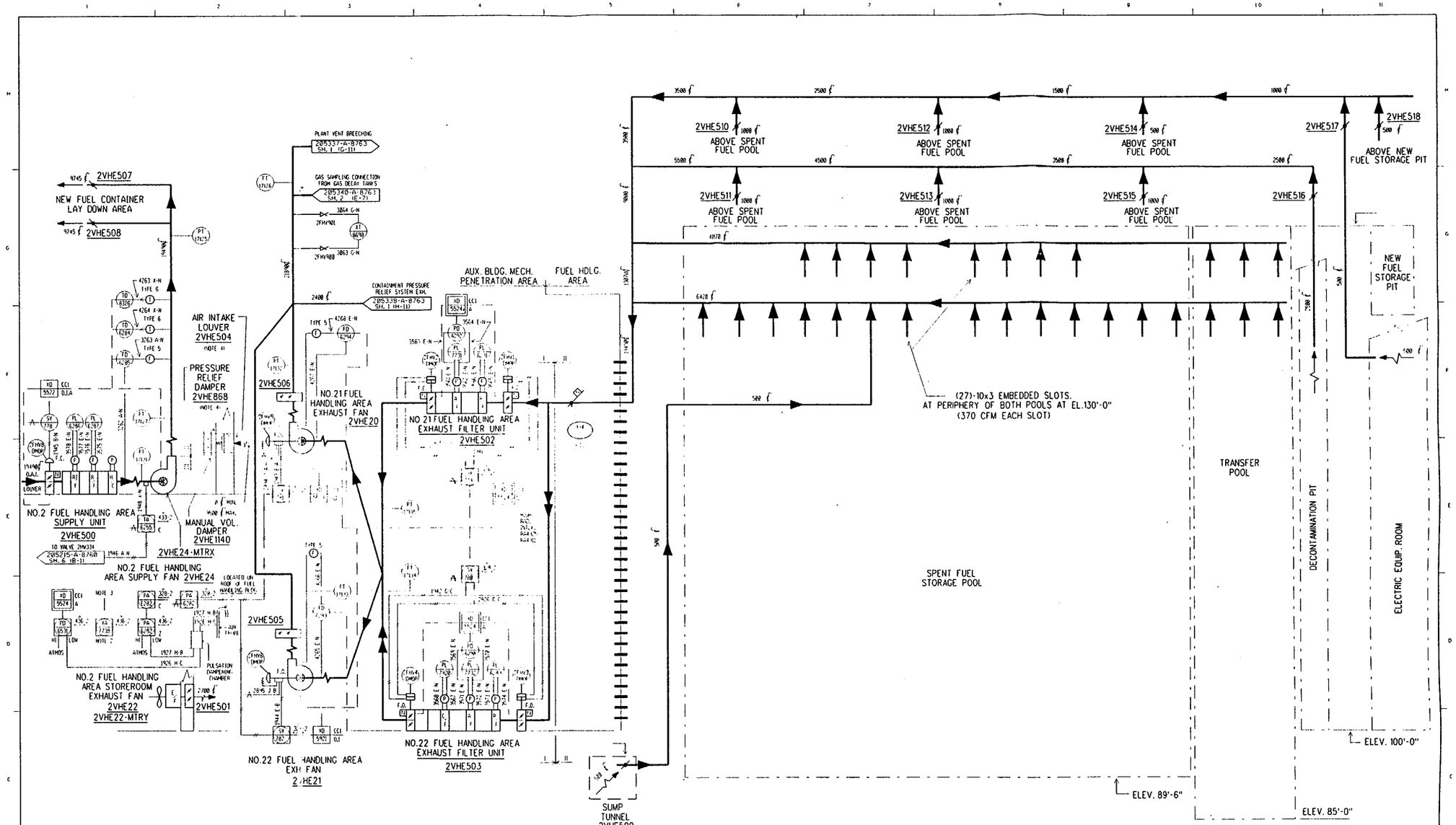

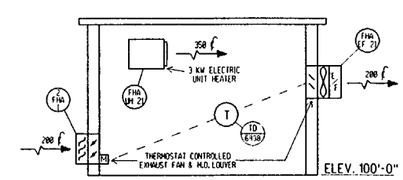

VENT SAMPLING ENCLOSURE
(SEISMIC CLASS III)

NOTE:

1. ALL INSTRUMENTATION TO BE UNDERSTOOD TO CONTAIN THE PREFIX "2" FOR UNIT 2.
2. INSTRUMENT ABANDONED IN PLACE.
3. CABLE TO 2XL7739 (NOT INSTALLED) WAS SPARED.
4. LOCATED IN FUEL HANDLING TRUCK BAY, ELEV. 100'-0".

REFERENCE DRAWINGS

NO.2 UNIT-AUXILIARY BLDG.-VENTILATION DIAG.		205337-A-8763
NO.2 UNIT-REACTOR CONT.-VENTILATION DIAG.		205338-A-8763
FUEL HANDLING AREA VENTILATION SYSTEM	INSTR. SCH.	240679-B-9657-6
HEATING WATER-BUILDING HEATING & PLUMBING	INSTR. SCH.	232315-B-9608-10
AUX. BUILDING-DIESEL GENERATOR AREA VENTILATION	INSTR. SCH.	240705-B-9658-3
LEGEND SHEET		600658-A-8727
205322-A-8762 SH.1		NO.2 UNIT AUXILIARY BUILDING FUEL HANDLING AREA VENTILATION VENT SAMPLING ENCLOSURE EL. 100'-0"
205322-A-8762 SH.2	(VOIDED)	NO.2 UNIT AUXILIARY BUILDING DIESEL GENERATOR AREA VENTILATION
205322-A-8762 SH.3		NO.2 UNIT AUXILIARY BUILDING DIESEL GENERATOR AREA VENTILATION

Ref. Dwg. 205322-A-8763 Sh. 1 - 22

PUBLIC SERVICE ELECTRIC AND GAS COMPANY
SALEM NUCLEAR GENERATING STATION

Fuel Handling Area Ventilation System
Unit 2

Updated FSAR — Sheet 1 of 1
Revision 18, April 26, 2000 — Fig 9.4-3B

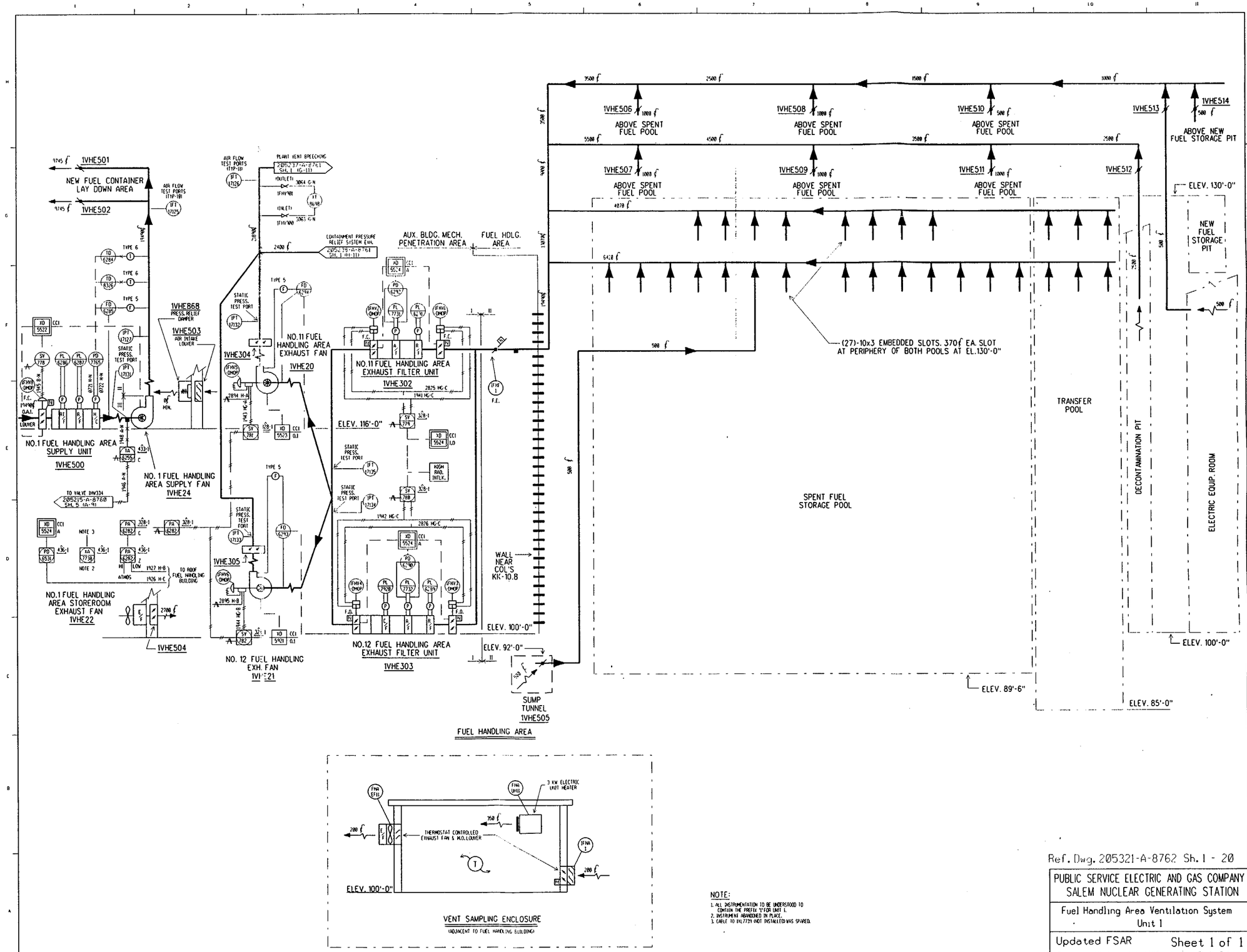

NOTE:
1. ALL INSTRUMENTATION TO BE UNDERSTOOD TO CONTAIN THE PREFIX "1" FOR UNIT 1.
2. INSTRUMENT ABANDONED IN PLACE.
3. CABLE TO 1VL7739 (NOT INSTALLED) WAS SPARED.

Ref. Dwg. 205321-A-8762 Sh. 1 - 20

PUBLIC SERVICE ELECTRIC AND GAS COMPANY
SALEM NUCLEAR GENERATING STATION

Fuel Handling Area Ventilation System
Unit 1

Updated FSAR Sheet 1 of 1
Revision 18, April 26, 2000 Fig 9.4-3A

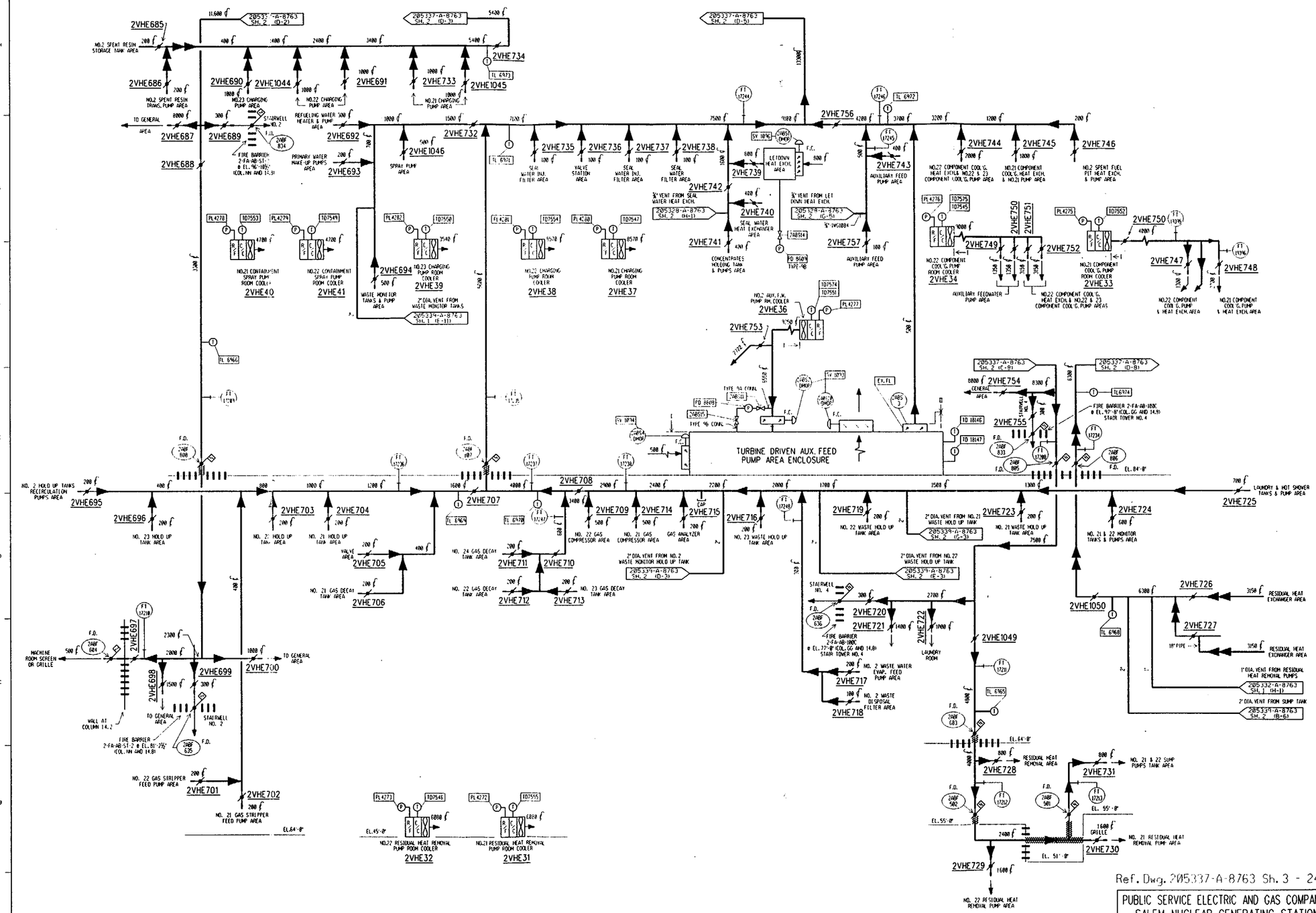

Ref. Dwg. 205337-A-8763 Sh. 3 - 24

PUBLIC SERVICE ELECTRIC AND GAS COMPANY
SALEM NUCLEAR GENERATING STATION

Auxiliary Building Ventilation System
Unit 2

Updated FSAR — Sheet 3 of 3
Revision 18, April 26, 2000 — Fig 9.4-2B

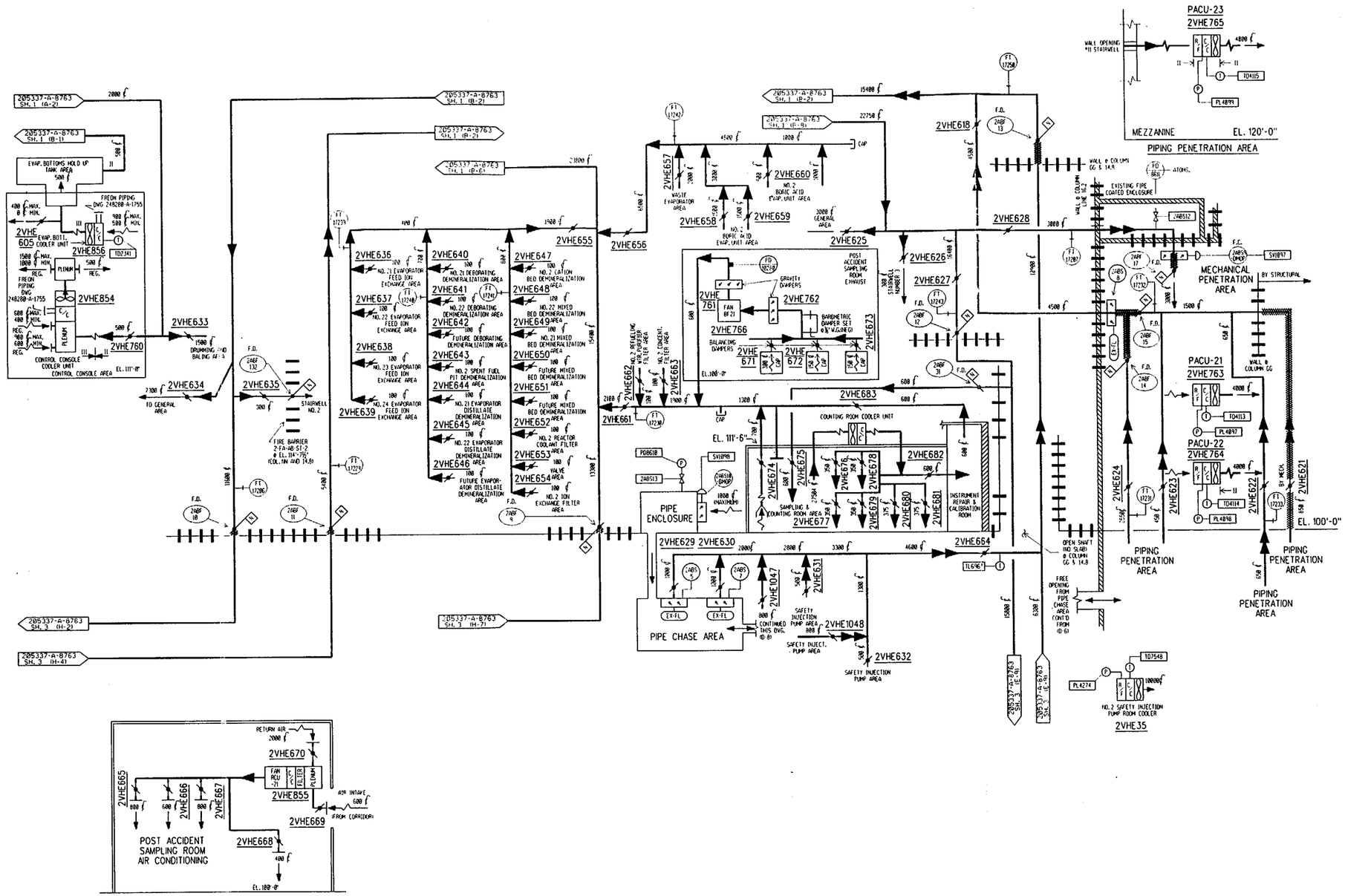

Ref. Dwg. 205337-A-8763 Sh. 2 - 21

PUBLIC SERVICE ELECTRIC AND GAS COMPANY SALEM NUCLEAR GENERATING STATION
Auxiliary Building Ventilation System Unit 2
Updated FSAR Sheet 2 of 3 Revision 18, April 26, 2000 Fig 9.4-2B

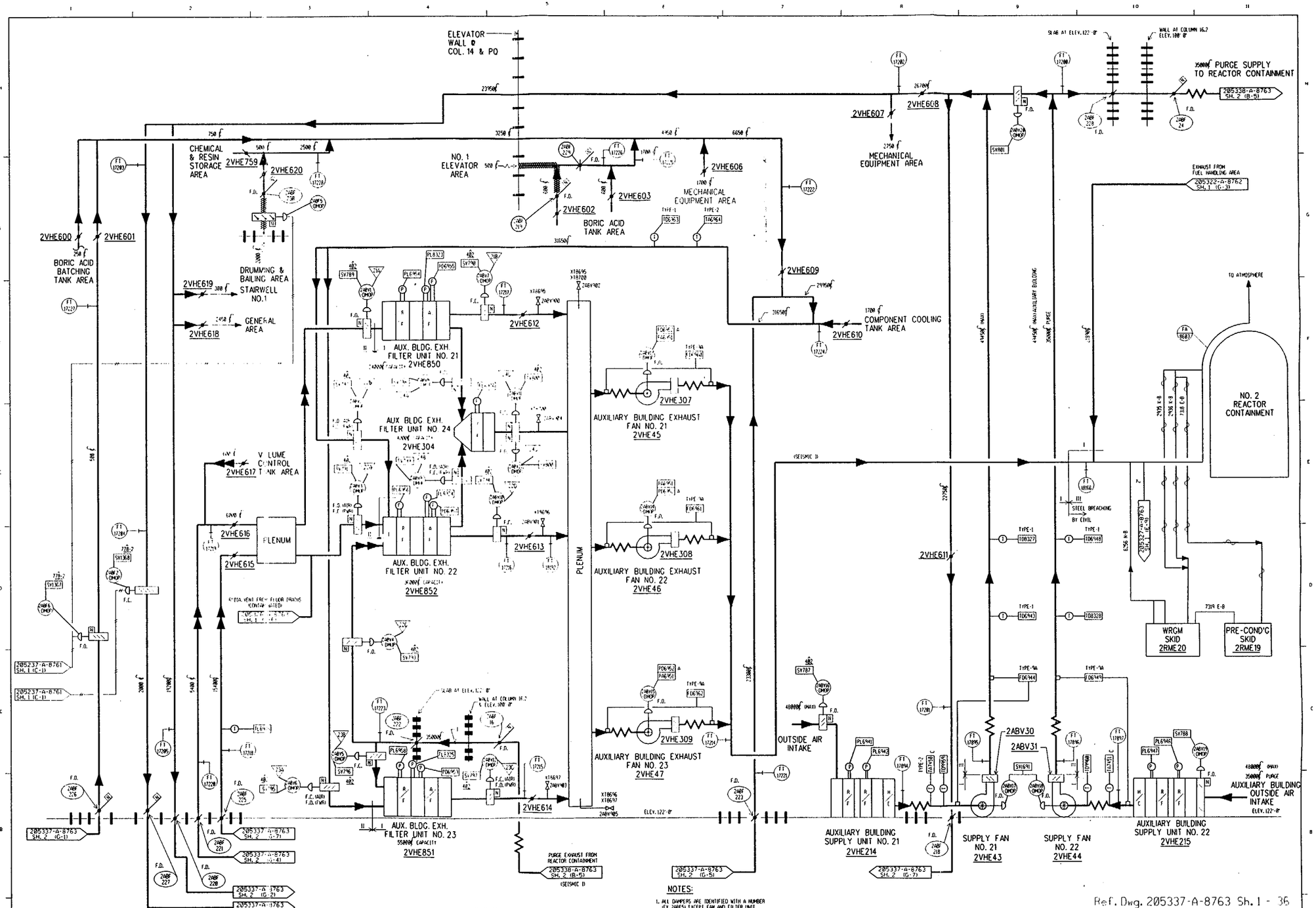

REFERENCE DRAWINGS

205337-A-8763	DIAG.	NO. 2 UNIT-AUXILIARY BUILDING-VENTILATION
SHEET 1		ELEVATION 122'-8"
SHEET 2		ELEVATION 100'-8"
SHEET 3		ELEVATION 45', 55', 64' & 84'-8"

NOTES:

1. ALL DAMPERS ARE IDENTIFIED WITH A NUMBER (EX. 2ABF54), EXCEPT FAN AND FILTER UNIT DAMPERS WHICH ARE INCLUDED WITH THE UNIT I.D. NUMBER (EX. 2VHE206). ALL DAMPER OPERATORS (DMOP) ARE IDENTIFIED WITH A DAMPER NUMBER-DMOP (EX. 2ABF5-DMOP).
2. ALL INSTRUMENTATION TO BE UNDERSTOOD TO CONTAIN THE PREFIX "2" FOR UNIT 2.
3. PIPING CLASS 53D WAS ORIGINALLY CLASSIFIED AS NUCLEAR CLASS III. DCP 2EA-1022 RECLASSIFIES PIPING CLASS 53D TO BE NON-NUCLEAR. ANY MAINTENANCE, REPAIR AND/OR MODIFICATION HENCEFORTH SHALL COMPLY WITH THE REQUIREMENTS OF RECLASSIFIED PIPING CLASS.
4. FOR APPLICABLE INSTRUMENT TUBING LINE NUMBERS TO COMPONENTS, SYMBOL DESIGNATIONS FOR LOCAL AND PANEL MOUNTED INSTRUMENTS, PANEL NOS. WHERE INSTRUMENTS ARE LOCATED, AND LOCAL TEMPERATURE ANALYZERS REFER TO INSTRUMENT SCHEMATIC DWG 2BK74-B-1656.

Ref. Dwg. 205337-A-8763 Sh. 1 - 36

PUBLIC SERVICE ELECTRIC AND GAS COMPANY
SALEM NUCLEAR GENERATING STATION

Auxiliary Building Ventilation System
Unit 2

Updated FSAR — Sheet 1 of 3
Revision 18, April 26, 2000 — Fig 9.4-2B

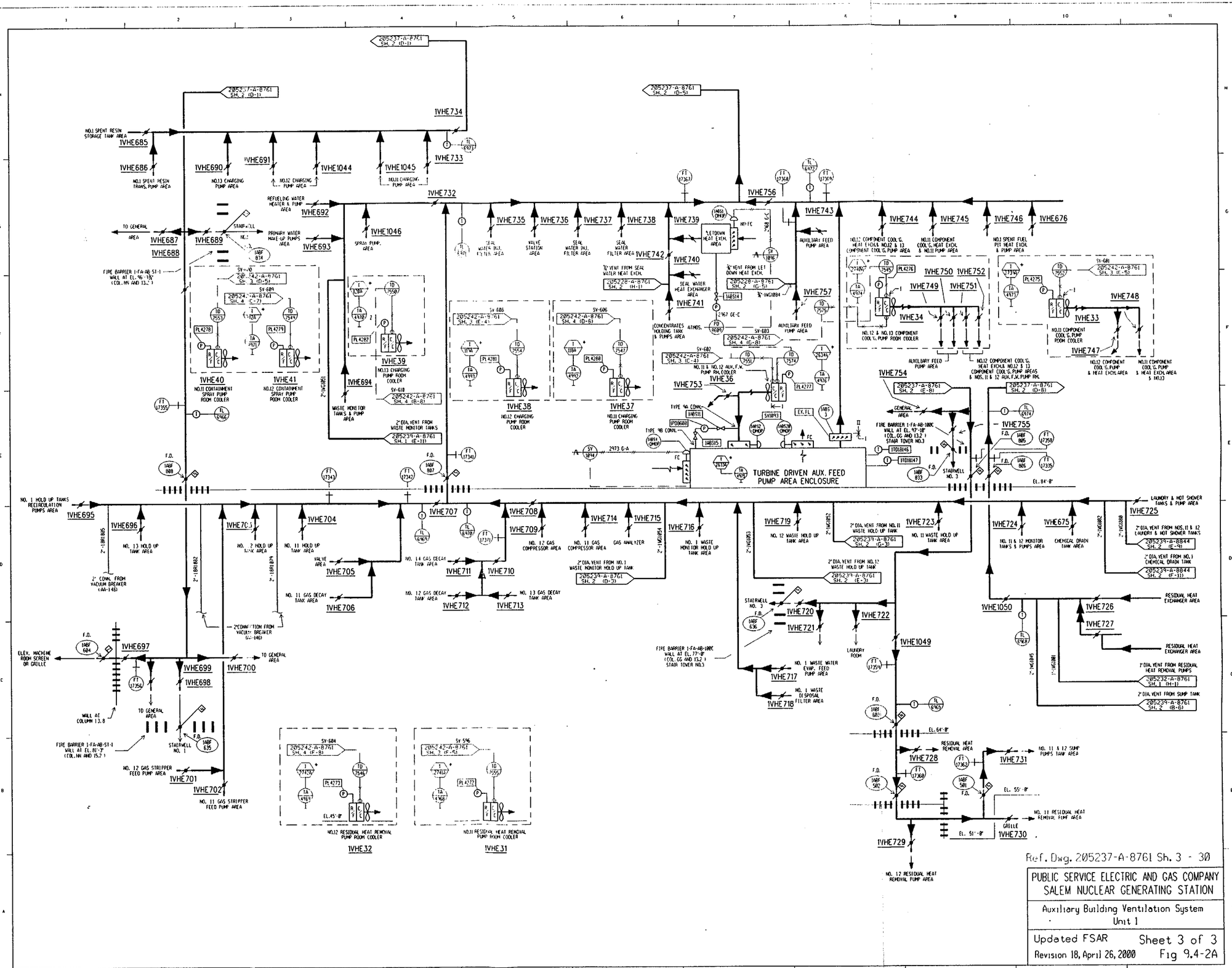

Ref. Dwg. 205237-A-8761 Sh. 3 - 30

PUBLIC SERVICE ELECTRIC AND GAS COMPANY
SALEM NUCLEAR GENERATING STATION

Auxiliary Building Ventilation System
Unit 1

Updated FSAR
Revision 18, April 26, 2000

Sheet 3 of 3
Fig 9.4-2A

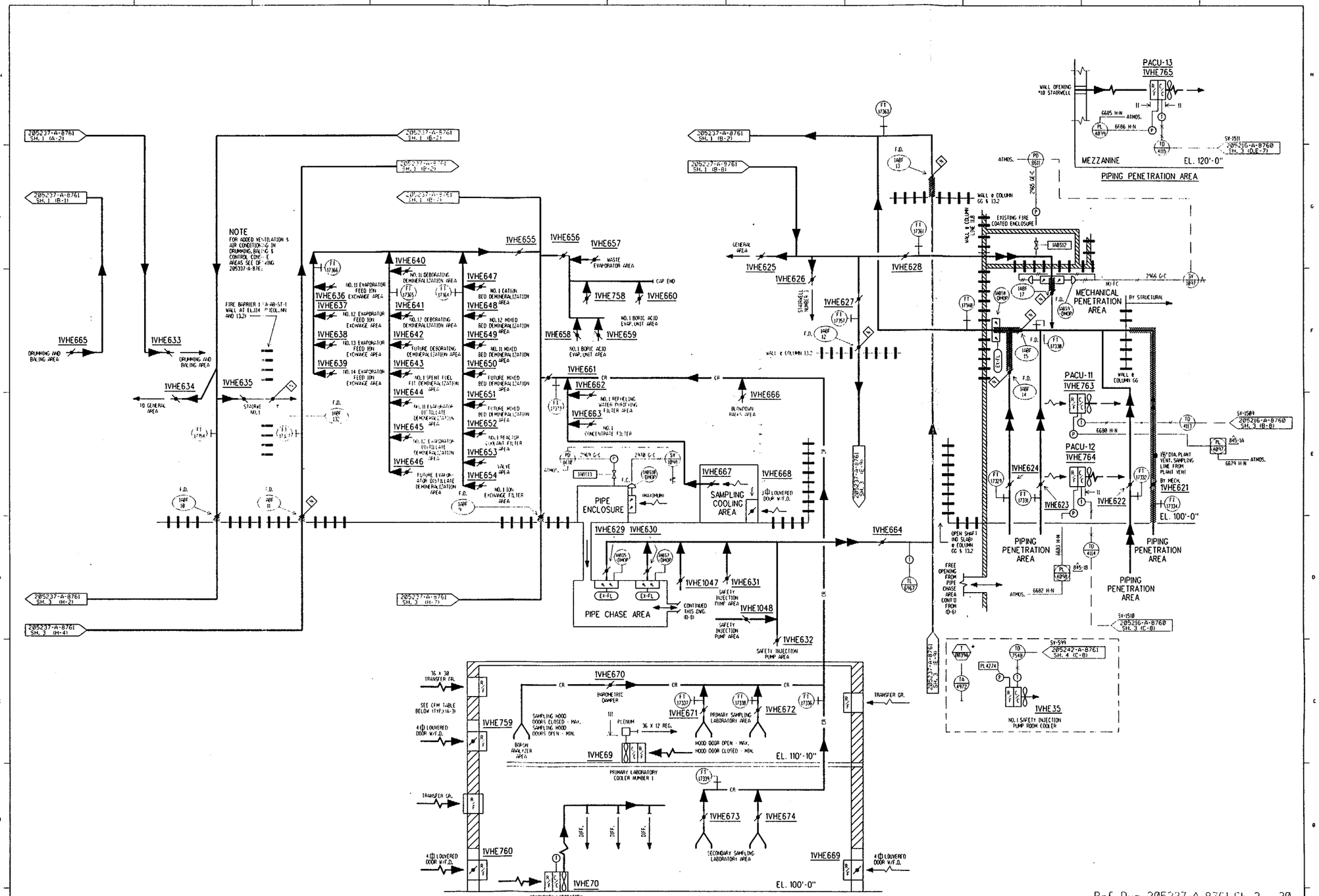

Ref. Dwg. 205237-A-8761 Sh. 2 - 30

PUBLIC SERVICE ELECTRIC AND GAS COMPANY SALEM NUCLEAR GENERATING STATION	
Auxiliary Building Ventilation System Unit 1	
Updated FSAR Revision 18, April 26, 2000	Sheet 2 of 3 Fig 9.4-2A

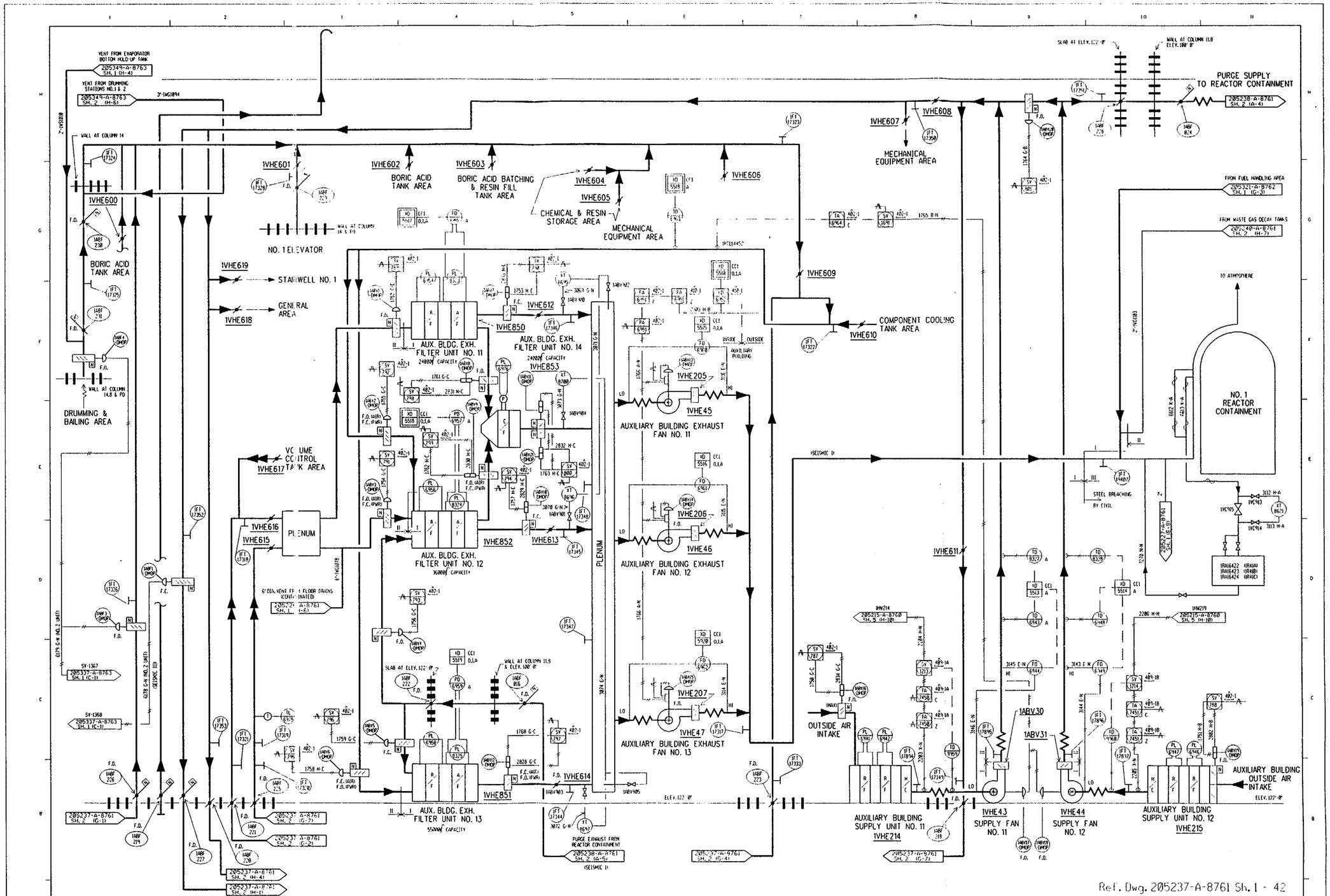

NOTES:

1. ALL DAMPERS ARE IDENTIFIED WITH A NUMBER (EX. 1ABF4), EXCEPT FAN AND FILTER UNIT DAMPERS WHICH ARE INCLUDED WITH THE UNIT 1.D. NUMBER (EX. 1VHE215). ALL DAMPER OPERATORS, DMOPS ARE IDENTIFIED WITH A DAMPER NUMBER DMOP (EX. 1ABF4-DMOP).
2. ALL INSTRUMENTATION TO BE UNDERSTOOD TO CONTAIN THE PREFIX "1" FOR UNIT 1.
3. PIPING CLASS 530 WAS ORIGINALLY CLASSIFIED AS NUCLEAR CLASS III. DCP 1EA-1028 RECLASSIFIES PIPING CLASS 530 TO BE NON-NUCLEAR. ANY MAINTENANCE, REPAIR AND/OR MODIFICATION HENCEFORTH SHALL COMPLY WITH THE REQUIREMENTS OF RECLASSIFIED PIPING CLASS.

NOTE: FOR VALVE MARK NOS. NOT SHOWN ON THIS SHEET, REFER TO MMS.

Ref. Dwg. 205237-A-8761 Sh. 1 - 42

PUBLIC SERVICE ELECTRIC AND GAS COMPANY
SALEM NUCLEAR GENERATING STATION

Auxiliary Building Ventilation System
Unit 1

Updated FSAR
Revision 18, April 26, 2000

Sheet 1 of 3
Fig 9.4-2A

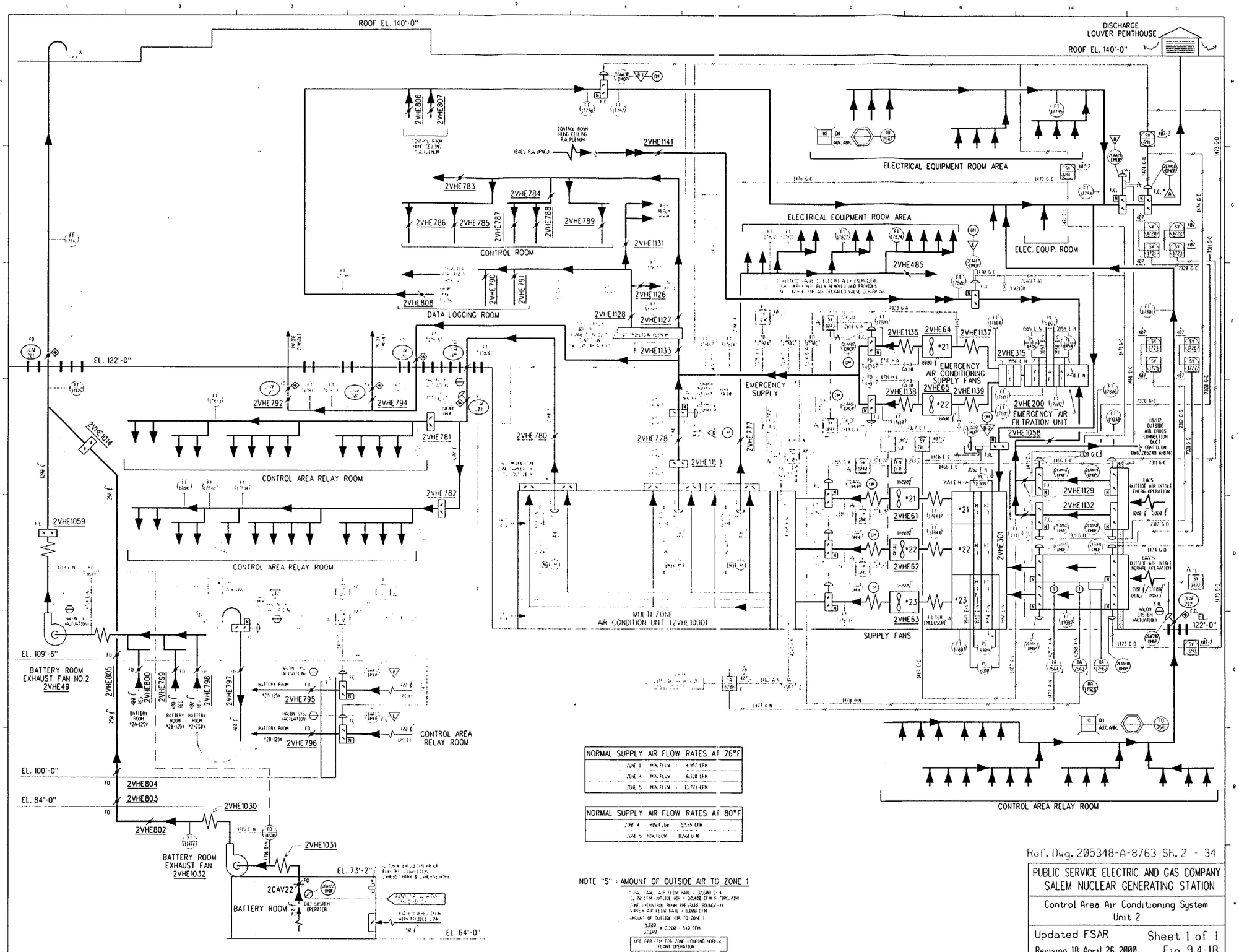

NORMAL SUPPLY AIR FLOW RATES AT 76°F		
ZONE 1	MIN. FLOW	4,957 CFM
ZONE 4	MIN. FLOW	6,120 CFM
ZONE 5	MIN. FLOW	13,773 CFM

NORMAL SUPPLY AIR FLOW RATES AT 80°F		
ZONE 4	MIN. FLOW	5,5[illegible] CFM
ZONE 5	MIN. FLOW	11,561 CFM

NOTE "S" : AMOUNT OF OUTSIDE AIR TO ZONE 1

[illegible] AIR FLOW RATE = 32,600 CFM
[illegible] CFM OUTSIDE AIR = 30,400 CFM [illegible]
ZONE 1 (CONTROL ROOM PRESSURE BOUNDARY)
SUPPLY AIR FLOW RATE = 8,000 CFM
AMOUNT OF OUTSIDE AIR TO ZONE 1
8,000 / 32,600 = 2,200 = 540 CFM

USE 400 CFM FOR ZONE 1 DURING NORMAL PLANT OPERATION

Ref. Dwg. 205348-A-8763 Sh. 2 - 34

PUBLIC SERVICE ELECTRIC AND GAS COMPANY
SALEM NUCLEAR GENERATING STATION

Control Area Air Conditioning System
Unit 2

Updated FSAR
Revision 18, April 26, 2000

Sheet 1 of 1
Fig 9.4-1B

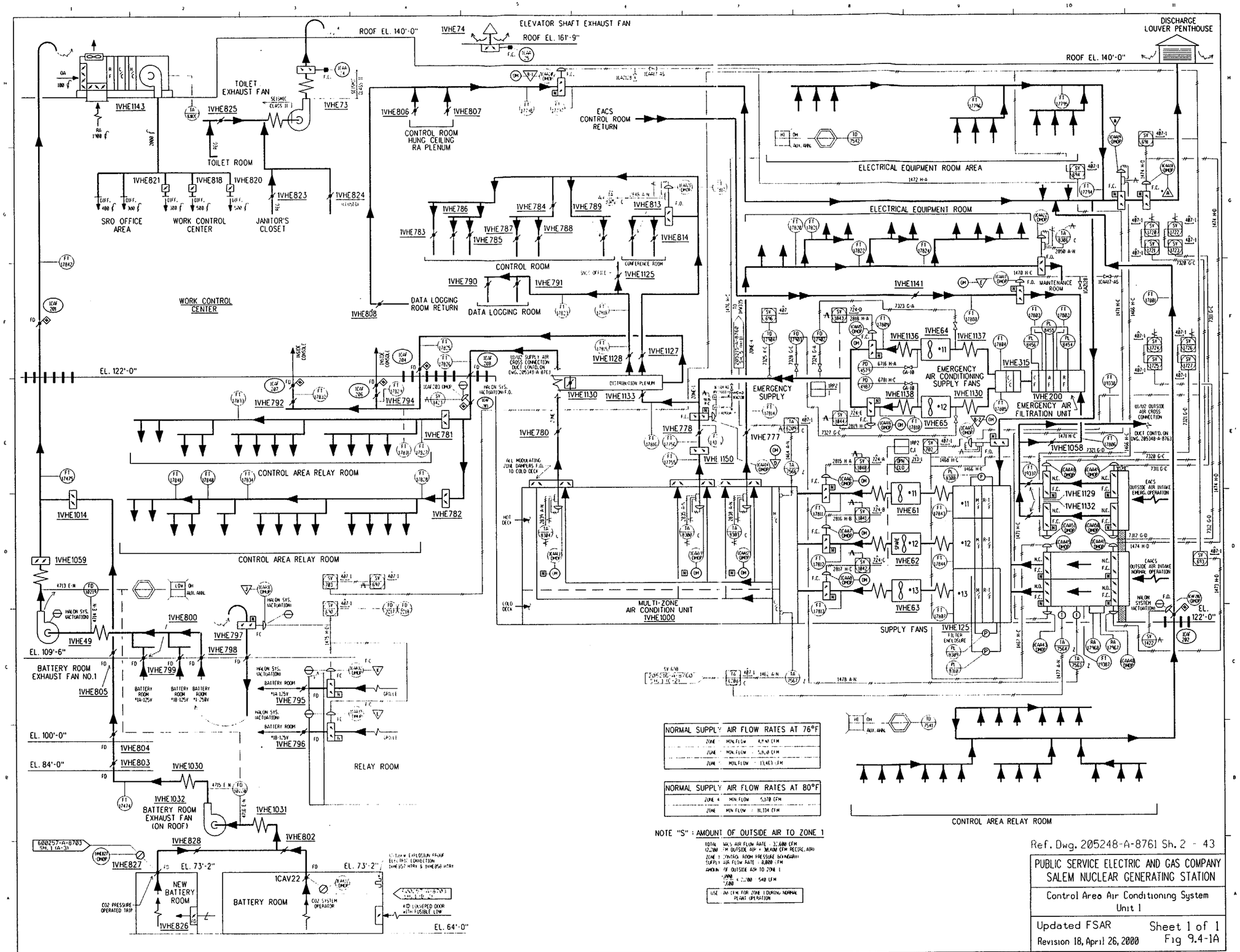

NORMAL SUPPLY AIR FLOW RATES AT 76°F		
ZONE	MIN FLOW	[illegible] CFM
ZONE	MIN FLOW	[illegible] CFM
ZONE	MIN FLOW	13,453 CFM

NORMAL SUPPLY AIR FLOW RATES AT 80°F		
ZONE 4	MIN FLOW	5,370 CFM
ZONE	MIN FLOW	11,334 CFM

NOTE "S": AMOUNT OF OUTSIDE AIR TO ZONE 1

10140 SUPPLY AIR FLOW RATE : 32,600 CFM
02200 CFM OUTSIDE AIR + 30,400 CFM RECIRC. AIR)
ZONE 1 CONTROL ROOM PRESSURE BOUNDARY
SUPPLY AIR FLOW RATE : 8,000 CFM
AMOUNT OF OUTSIDE AIR TO ZONE 1
[illegible] X 2,200 = 540 CFM
[illegible]
USE 200 CFM FOR ZONE 1 DURING NORMAL PLANT OPERATION

PUBLIC SERVICE ELECTRIC AND GAS COMPANY
SALEM NUCLEAR GENERATING STATION

Control Area Air Conditioning System
Unit 1

Updated FSAR
Revision 18, April 26, 2000

Sheet 1 of 1
Fig 9.4-1A

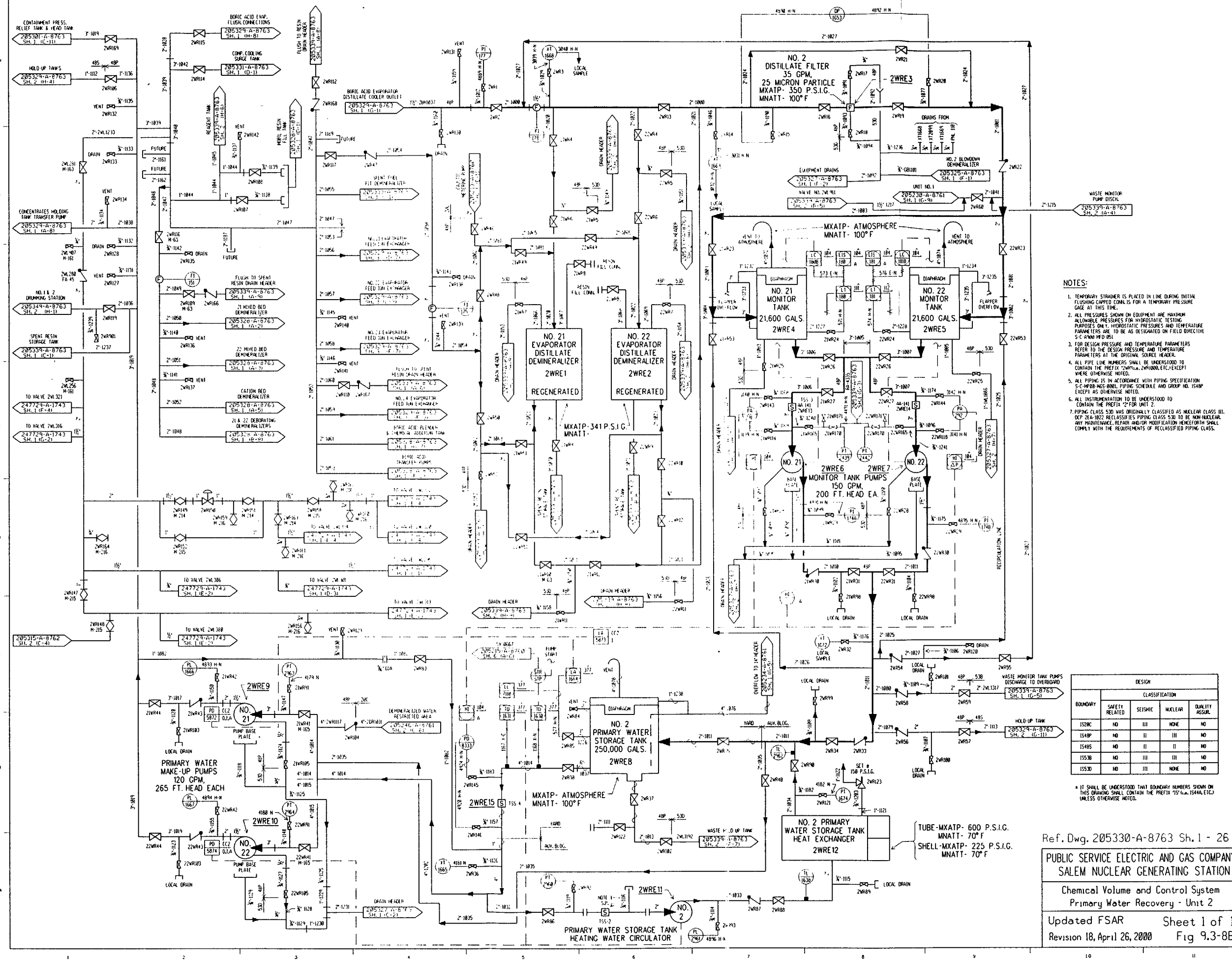

NOTES:

1. TEMPORARY STRAINER IS PLACED IN LINE DURING INITIAL FLUSHING CAPPED CONN.(S) FOR A TEMPORARY PRESSURE GAGE AT THIS TIME.
2. ALL PRESSURES SHOWN ON EQUIPMENT ARE MAXIMUM ALLOWABLE PRESSURES FOR HYDROSTATIC TESTING PURPOSES ONLY. HYDROSTATIC PRESSURES AND TEMPERATURE PARAMETERS ARE TO BE AS DESIGNATED ON FIELD DIRECTIVE S-C-HNM-MFD-051.
3. FOR DESIGN PRESSURE AND TEMPERATURE PARAMETERS REFER TO THE DESIGN PRESSURE AND TEMPERATURE PARAMETERS AT THE ORIGINAL SOURCE HEADER.
4. ALL PIPE LINE NUMBERS SHALL BE UNDERSTOOD TO CONTAIN THE PREFIX "2WR"i.e., 2WR1000, ETC.) EXCEPT WHERE OTHERWISE NOTED.
5. ALL PIPING IS IN ACCORDANCE WITH PIPING SPECIFICATION S-C-HPDB-MDS-8001, PIPING SCHEDULE AND GROUP NO. 1548P EXCEPT AS OTHERWISE NOTED.
6. ALL INSTRUMENTATION TO BE UNDERSTOOD TO CONTAIN THE PREFIX "2" FOR UNIT 2.
7. PIPING CLASS 53D WAS ORIGINALLY CLASSIFIED AS NUCLEAR CLASS III. DCP 2EA-1822 RECLASSIFIES PIPING CLASS 53D TO BE NON-NUCLEAR. ANY MAINTENANCE, REPAIR AND/OR MODIFICATION HENCEFORTH SHALL COMPLY WITH THE REQUIREMENTS OF RECLASSIFIED PIPING CLASS.

BOUNDARY	DESIGN CLASSIFICATION			
	SAFETY RELATED	SEISMIC	NUCLEAR	QUALITY ASSUR.
IS28C	NO	III	NONE	NO
IS48P	NO	II	III	NO
IS48S	NO	II	II	NO
IS53B	NO	III	III	NO
IS53D	NO	III	NONE	NO

* IT SHALL BE UNDERSTOOD THAT BOUNDARY NUMBERS SHOWN ON THIS DRAWING SHALL CONTAIN THE PREFIX "IS"(i.e., IS48A, ETC) UNLESS OTHERWISE NOTED.

Ref. Dwg. 205330-A-8763 Sh. 1 - 26

PUBLIC SERVICE ELECTRIC AND GAS COMPANY
SALEM NUCLEAR GENERATING STATION

Chemical Volume and Control System
Primary Water Recovery - Unit 2

Updated FSAR — Sheet 1 of 1
Revision 18, April 26, 2000 — Fig 9.3-8B

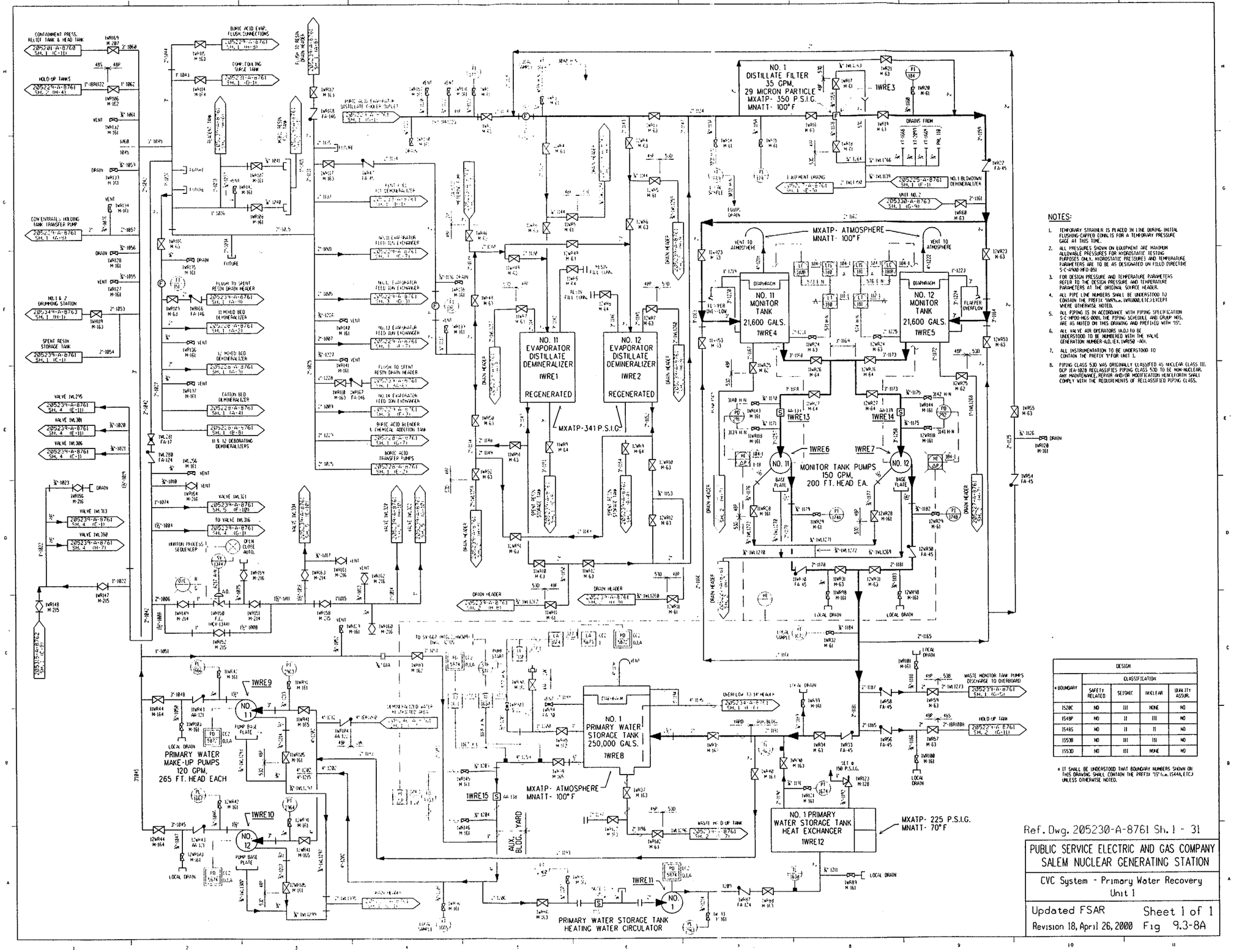

NOTES:

1. TEMPORARY STRAINER IS PLACED IN LINE DURING INITIAL FLUSHING-CAPPED CONN. IS FOR A TEMPORARY PRESSURE GAGE AT THIS TIME.
2. ALL PRESSURES SHOWN ON EQUIPMENT ARE MAXIMUM ALLOWABLE PRESSURES FOR HYDROSTATIC TESTING PURPOSES ONLY. HYDROSTATIC PRESSURES AND TEMPERATURE PARAMETERS ARE TO BE AS DESIGNATED ON FILLED DIRECTIVE S-C-4900-HFD-051
3. FOR DESIGN PRESSURE AND TEMPERATURE PARAMETERS REFER TO THE DESIGN PRESSURE AND TEMPERATURE PARAMETERS AT THE ORIGINAL SOURCE HEADER.
4. ALL PIPE LINE NUMBERS SHALL BE UNDERSTOOD TO CONTAIN THE PREFIX "1WR1000, 1WR1000, ETC.) EXCEPT WHERE OTHERWISE NOTED.
5. ALL PIPING IS IN ACCORDANCE WITH PIPING SPECIFICATION S-C-HP00-MGS-0001. THE PIPING SCHEDULE AND GROUP NOS. ARE AS NOTED ON THIS DRAWING AND PREFIXED WITH "1S".
6. ALL VALVE AIR OPERATORS (A.O.) TO BE UNDERSTOOD TO BE NUMBERED WITH THE VALVE GENERATION NUMBER-A.O. (E.X. 1WR50 -AO).
7. ALL INSTRUMENTATION TO BE UNDERSTOOD TO CONTAIN THE PREFIX "1" FOR UNIT 1.
8. PIPING CLASS 530 WAS ORIGINALLY CLASSIFIED AS NUCLEAR CLASS III. DCP (EA-1028 RECLASSIFIES PIPING CLASS 530 TO BE NON-NUCLEAR. ANY MAINTENANCE, REPAIR AND/OR MODIFICATION HEREFORTH SHALL COMPLY WITH THE REQUIREMENTS OF RECLASSIFIED PIPING CLASS.

DESIGN				
* BOUNDARY	CLASSIFICATION			
	SAFETY RELATED	SEISMIC	NUCLEAR	QUALITY ASSUR.
1S20C	NO	III	NONE	NO
1S48P	NO	II	III	NO
1S48S	NO	II	II	NO
1S53B	NO	III	III	NO
1S53D	NO	III	NONE	NO

* IT SHALL BE UNDERSTOOD THAT BOUNDARY NUMBERS SHOWN ON THIS DRAWING SHALL CONTAIN THE PREFIX "1S" (i.e. 1S44A, ETC.) UNLESS OTHERWISE NOTED.

Ref. Dwg. 205230-A-8761 Sh. 1 - 31

PUBLIC SERVICE ELECTRIC AND GAS COMPANY
SALEM NUCLEAR GENERATING STATION

CVC System - Primary Water Recovery
Unit 1

Updated FSAR — Sheet 1 of 1
Revision 18, April 26, 2000 — Fig 9.3-8A

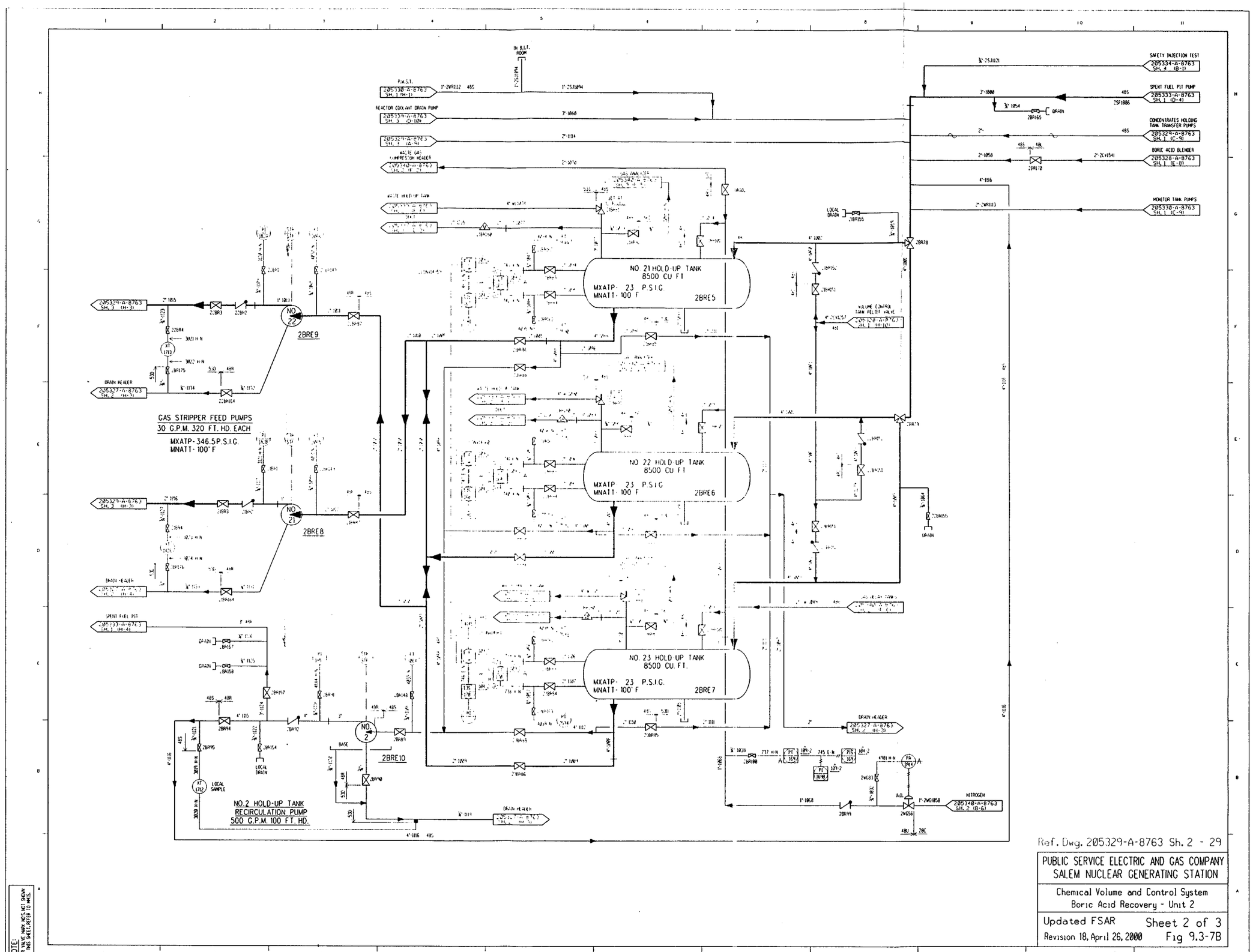

Ref. Dwg. 205329-A-8763 Sh. 2 - 29

PUBLIC SERVICE ELECTRIC AND GAS COMPANY
SALEM NUCLEAR GENERATING STATION

Chemical Volume and Control System
Boric Acid Recovery - Unit 2

Updated FSAR Sheet 2 of 3
Revision 18, April 26, 2000 Fig 9.3-7B

NOTE:
FOR VALVE MARK NOS. NOT SHOWN ON THIS SHEET, REFER TO MMS.

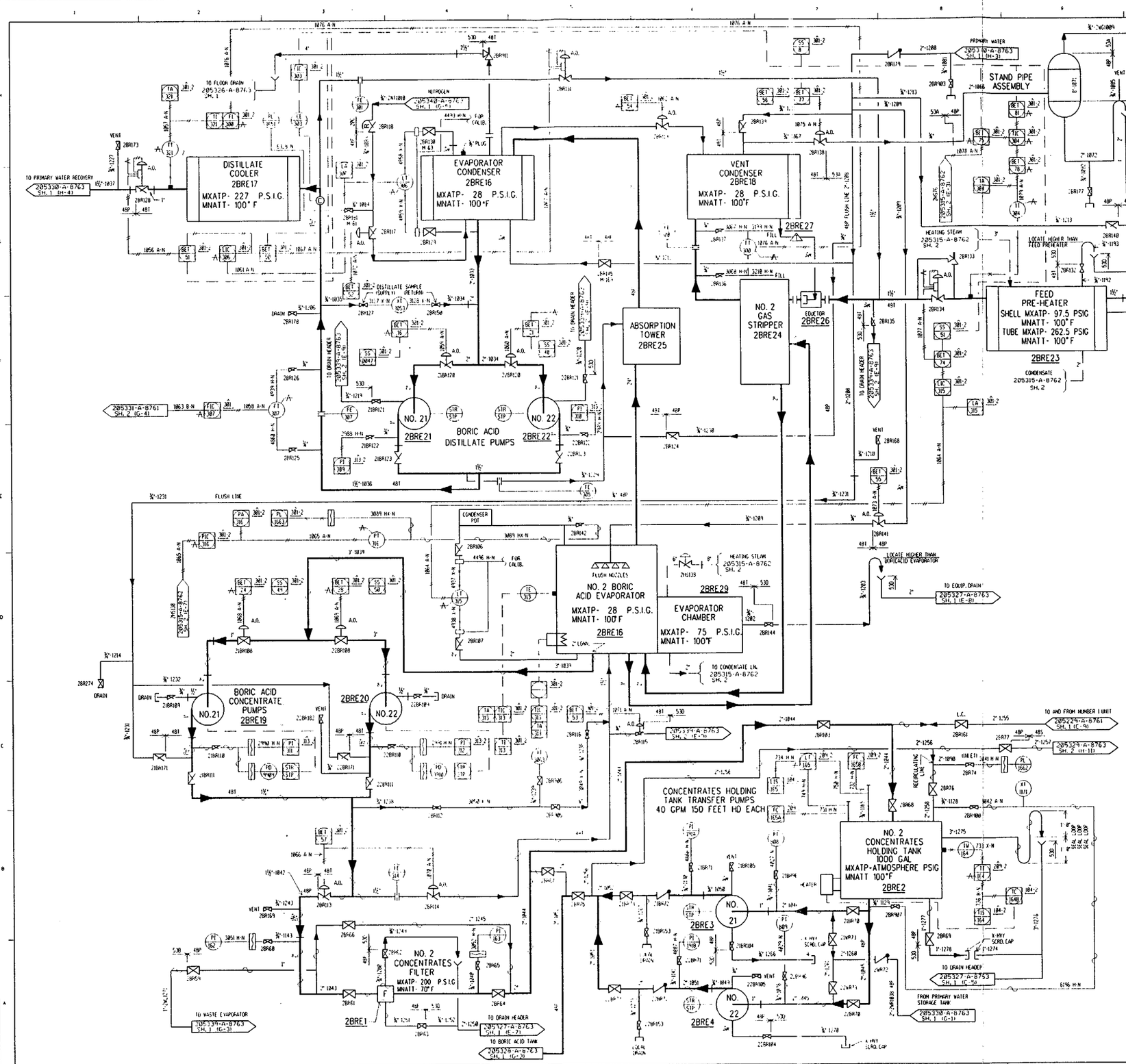

BOUNDARY*	DESIGN CLASSIFICATION			
	SAFETY RELATED	SEISMIC	NUCLEAR	QUALITY ASSUR
1548P	NO	II	III	NO
1548R	NO	II	II	NO
1548S	NO	II	II	NO
1548T	NO	III	NONE	NO
1520C	NO	III	NONE	NO
1553A	YES	I	III	YES
1553B	NO	III	III	NO
1553D	NO	III	NONE	NO
1556D	NO	II	NONE	A
SPS53T	NO	II	NONE	A
SPS48U	NO	II	NONE	A

* IT SHALL BE UNDERSTOOD THAT BOUNDARY NUMBERS SHOWN ON THIS DRAWING SHALL CONTAIN THE PREFIX "15" (I.E. 1544A, ETC.) UNLESS OTHERWISE NOTED.

NOTE:

1. ALL PRESSURES SHOWN ON EQUIPMENT ARE MAXIMUM ALLOWABLE PRESSURES FOR HYDROSTATIC TESTING PURPOSES ONLY. HYDROSTATIC PRESSURES AND TEMPERATURE PARAMETERS ARE TO BE AS DESIGNATED ON FIELD DIRECTIVE S-C-A900-MFD-005
2. ALL PIPE LINE NUMBERS SHALL BE UNDERSTOOD TO CONTAIN THE PREFIX "2BR" (i.e. 2BR1000, ETC.) EXCEPT WHERE OTHERWISE NOTED
3. ALL PIPING IS IN ACCORDANCE WITH SPEC. NO. S-C-MP88-MGS-0001 THE PIPING SCHEDULE AND GROUP NUMBERS ARE AS NOTED ON THIS DRAWING AND PREFIXED WITH "15" IN THE PIPE SPEC.
4. ALL VALVE AIR OPERATORS (A.O.) TO BE UNDERSTOOD TO BE NUMBERED WITH THE VALVE GENERATION NUMBER-A.O. (E.G. 2BR120-A.O.).
5. ALL INSTRUMENTATION TO BE UNDERSTOOD TO CONTAIN THE PREFIX "2" FOR UNIT 2.
6. PIPING CLASS 530 WAS ORIGINALLY CLASSIFIED AS NUCLEAR CLASS III. DCP 2EA-1022 RECLASSIFIES PIPING CLASS 530 TO BE NON NUCLEAR. ANY MAINTENANCE, REPAIR AND/OR MODIFICATION HENCEFORTH SHALL COMPLY WITH THE REQUIREMENTS OF RECLASSIFIED PIPING CLASS.

NOTE: FOR VALVE NOS. NOT SHOWN ON THIS SHEET, REFER TO NMCL.

Ref. Dwg. 205329-A-8763 Sh. 1 - 33

PUBLIC SERVICE ELECTRIC AND GAS COMPANY
SALEM NUCLEAR GENERATING STATION

Chemical Volume and Control System
Boric Acid Recovery - Unit 2

Updated FSAR
Revision 18, April 26, 2000

Sheet 1 of 3
Fig 9.3-7B

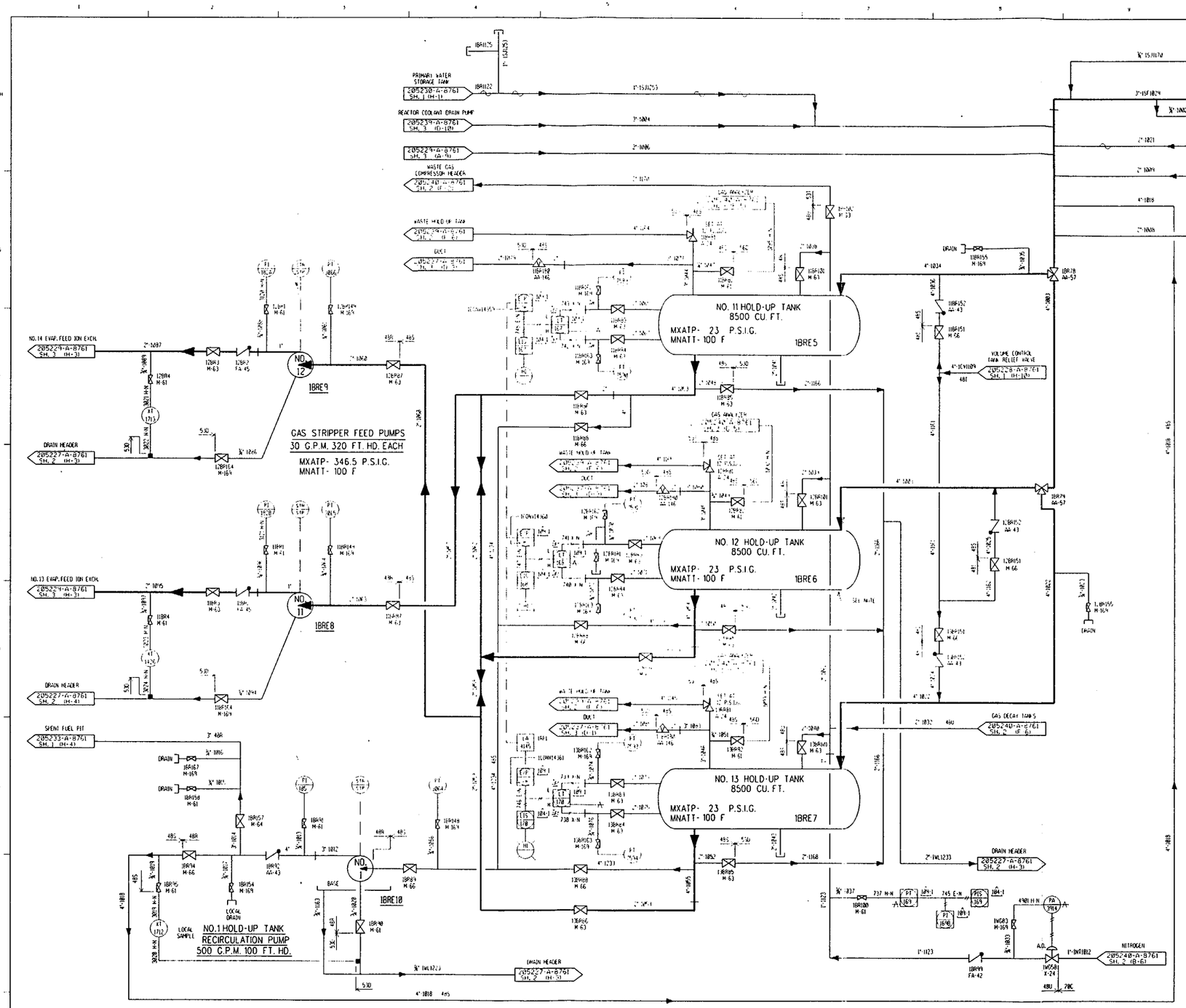

NOTE:
NO. 12 HOLD-UP TANK IS ABANDONED IN PLACE.

Ref. Dwg. 205229-A-8761 Sh. 2 - 30

PUBLIC SERVICE ELECTRIC AND GAS COMPANY SALEM NUCLEAR GENERATING STATION
Chemical Volume and Control System Boric Acid Recovery - Unit 1
Updated FSAR Sheet 2 of 3 Revision 18, April 26, 2000 Fig 9.3-7A

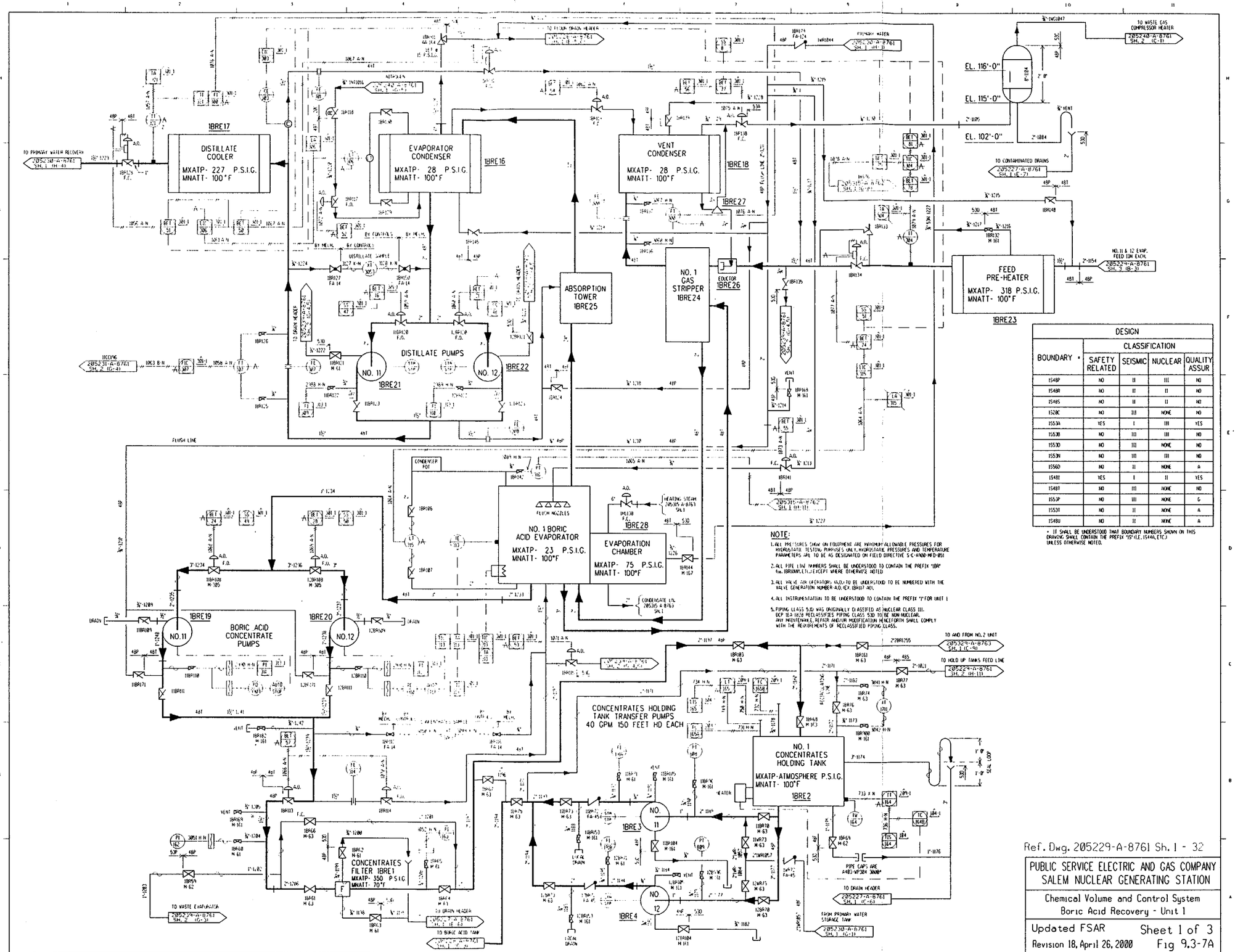

DESIGN				
BOUNDARY *	CLASSIFICATION			
	SAFETY RELATED	SEISMIC	NUCLEAR	QUALITY ASSUR
1S48P	NO	II	III	NO
1S48R	NO	II	II	NO
1S48S	NO	II	II	NO
1S28C	NO	III	NONE	NO
1S53A	YES	I	III	YES
1S53B	NO	III	III	NO
1S53D	NO	III	NONE	NO
1S53N	NO	III	III	NO
1S56D	NO	II	NONE	A
1S48I	YES	I	II	YES
1S48J	NO	III	NONE	NO
1S53P	NO	III	NONE	G
1S53T	NO	II	NONE	A
1S48U	NO	II	NONE	A

* IT SHALL BE UNDERSTOOD THAT BOUNDARY NUMBERS SHOWN ON THIS DRAWING SHALL CONTAIN THE PREFIX "1S" (I.E., 1S44A, ETC.) UNLESS OTHERWISE NOTED.

NOTE:

1. ALL PRESSURES SHOW ON EQUIPMENT ARE MAXIMUM ALLOWABLE PRESSURES FOR HYDROSTATIC TESTING PURPOSES ONLY. HYDROSTATIC PRESSURES AND TEMPERATURE PARAMETERS ARE TO BE AS DESIGNATED ON FIELD DIRECTIVE S-C-A900-MFD-051
2. ALL PIPE LINE NUMBERS SHALL BE UNDERSTOOD TO CONTAIN THE PREFIX "1BR" (i.e. 1BR1000, ETC.) EXCEPT WHERE OTHERWISE NOTED
3. ALL VALVE AIR OPERATORS (A.O.) TO BE UNDERSTOOD TO BE NUMBERED WITH THE VALVE GENERATION NUMBER A.O. (EX. 1BR117 A0).
4. ALL INSTRUMENTATION TO BE UNDERSTOOD TO CONTAIN THE PREFIX "1" FOR UNIT 1
5. PIPING CLASS 530 WAS ORIGINALLY CLASSIFIED AS NUCLEAR CLASS III. DCP 1EA 1828 RECLASSIFIES PIPING CLASS 530 TO BE NON-NUCLEAR. ANY MAINTENANCE, REPAIR AND/OR MODIFICATION HENCEFORTH SHALL COMPLY WITH THE REQUIREMENTS OF RECLASSIFIED PIPING CLASS.

Ref. Dwg. 205229-A-8761 Sh. 1 - 32

PUBLIC SERVICE ELECTRIC AND GAS COMPANY
SALEM NUCLEAR GENERATING STATION

Chemical Volume and Control System
Boric Acid Recovery - Unit 1

Updated FSAR
Revision 18, April 26, 2000

Sheet 1 of 3
Fig 9.3-7A

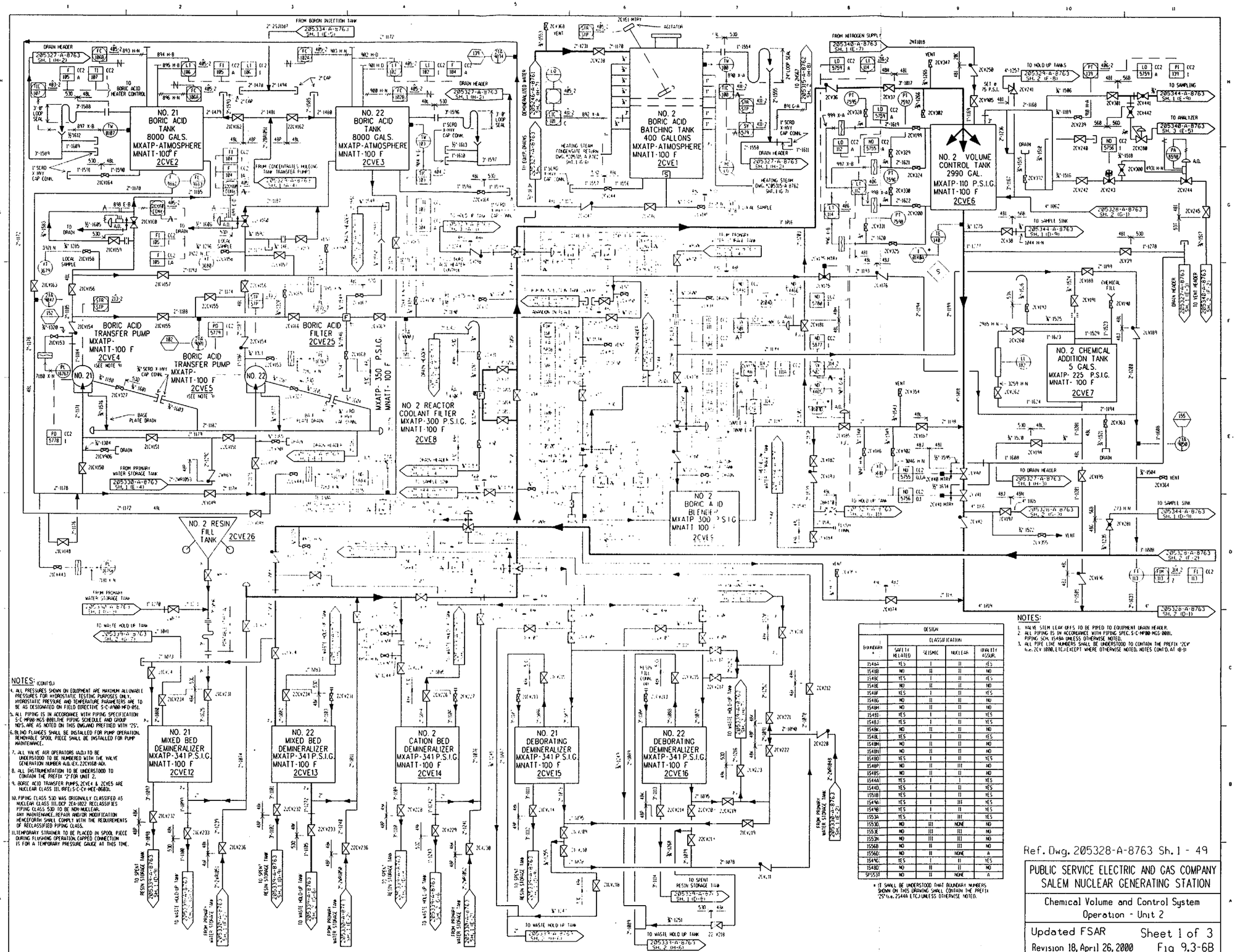

NOTES: (CONT'D)

4. ALL PRESSURES SHOWN ON EQUIPMENT ARE MAXIMUM ALLOWABLE PRESSURES FOR HYDROSTATIC TESTING PURPOSES ONLY. HYDROSTATIC PRESSURE AND TEMPERATURE PARAMETERS ARE TO BE AS DESIGNATED ON FIELD DIRECTIVE S-C-MPBB-MFD-0151.
5. ALL PIPING IS IN ACCORDANCE WITH PIPING SPECIFICATION S-C-MPBB-MGS-0001.THE PIPING SCHEDULE AND GROUP NOS. ARE AS NOTED ON THIS DWG.AND PREFIXED WITH "2S".
6. BLIND FLANGES SHALL BE INSTALLED FOR PUMP OPERATION. REMOVABLE SPOOL PIECE SHALL BE INSTALLED FOR PUMP MAINTENANCE.
7. ALL VALVE AIR OPERATORS (A.O.) TO BE UNDERSTOOD TO BE NUMBERED WITH THE VALVE GENERATION NUMBER A.O. EX. 22CV168-AOI.
8. ALL INSTRUMENTATION TO BE UNDERSTOOD TO CONTAIN THE PREFIX "2" FOR UNIT 2.
9. BORIC ACID TRANSFER PUMPS, 2CVE4 & 2CVE5 ARE NUCLEAR CLASS III, REF.: S-C-CV-MEE-0683L.
10. PIPING CLASS 53D WAS ORIGINALLY CLASSIFIED AS NUCLEAR CLASS III, DCP 2EA-1802 RECLASSIFIES PIPING CLASS 53D TO BE NON-NUCLEAR. ANY MAINTENANCE, REPAIR AND/OR MODIFICATION HENCEFORTH SHALL COMPLY WITH THE REQUIREMENTS OF RECLASSIFIED PIPING CLASS.
11. TEMPORARY STRAINER TO BE PLACED IN SPOOL PIECE DURING FLUSHING OPERATION. CAPPED CONNECTION IS FOR A TEMPORARY PRESSURE GAUGE AT THIS TIME.

BOUNDARY #	DESIGN CLASSIFICATION			
	SAFETY RELATED	SEISMIC	NUCLEAR	QUALITY ASSUR.
1546A	YES	I	II	YES
1546B	NO	II	II	NO
1546C	YES	I	II	YES
1546E	NO	II	II	NO
1546F	YES	I	II	YES
1546G	NO	II	II	NO
1546H	NO	II	II	NO
1546I	YES	I	II	YES
1546J	YES	I	II	YES
1546K	NO	II	II	NO
1546L	YES	I	II	YES
1546M	NO	II	II	NO
1546N	NO	II	II	NO
1546O	YES	I	II	YES
1546P	NO	II	II	NO
1546S	NO	II	II	NO
1544A	YES	I	I	YES
1544O	YES	I	II	YES
1551B	YES	I	II	YES
1549A	YES	I	III	YES
1549B	YES	I	III	YES
1553A	YES	I	III	YES
1553D	NO	III	NONE	NO
1553E	NO	III	III	NO
1553H	NO	III	III	NO
1556B	NO	II	III	NO
1556D	NO	II	NONE	A
1549G	YES	I	II	YES
1548D	NO	II	II	NO
SP5531	NO	II	NONE	A

* IT SHALL BE UNDERSTOOD THAT BOUNDARY NUMBERS SHOWN ON THIS DRAWING SHALL CONTAIN THE PREFIX "2S" i.e. 2S46A ETC.) UNLESS OTHERWISE NOTED.

NOTES:

1. VALVE STEM LEAK OFFS TO BE PIPED TO EQUIPMENT DRAIN HEADER.
2. ALL PIPING IS IN ACCORDANCE WITH PIPING SPEC. S-C-MPBB-MGS-0001. PIPING SCH. 1546A UNLESS OTHERWISE NOTED.
3. ALL PIPE LINE NUMBERS SHALL BE UNDERSTOOD TO CONTAIN THE PREFIX "2CV" i.e. 2CV 1800, ETC.) EXCEPT WHERE OTHERWISE NOTED. NOTES CONT'D. AT (8-1)

Ref. Dwg. 205328-A-8763 Sh. 1 - 49

PUBLIC SERVICE ELECTRIC AND GAS COMPANY
SALEM NUCLEAR GENERATING STATION

Chemical Volume and Control System
Operation - Unit 2

Updated FSAR
Revision 18, April 26, 2000

Sheet 1 of 3
Fig 9.3-6B

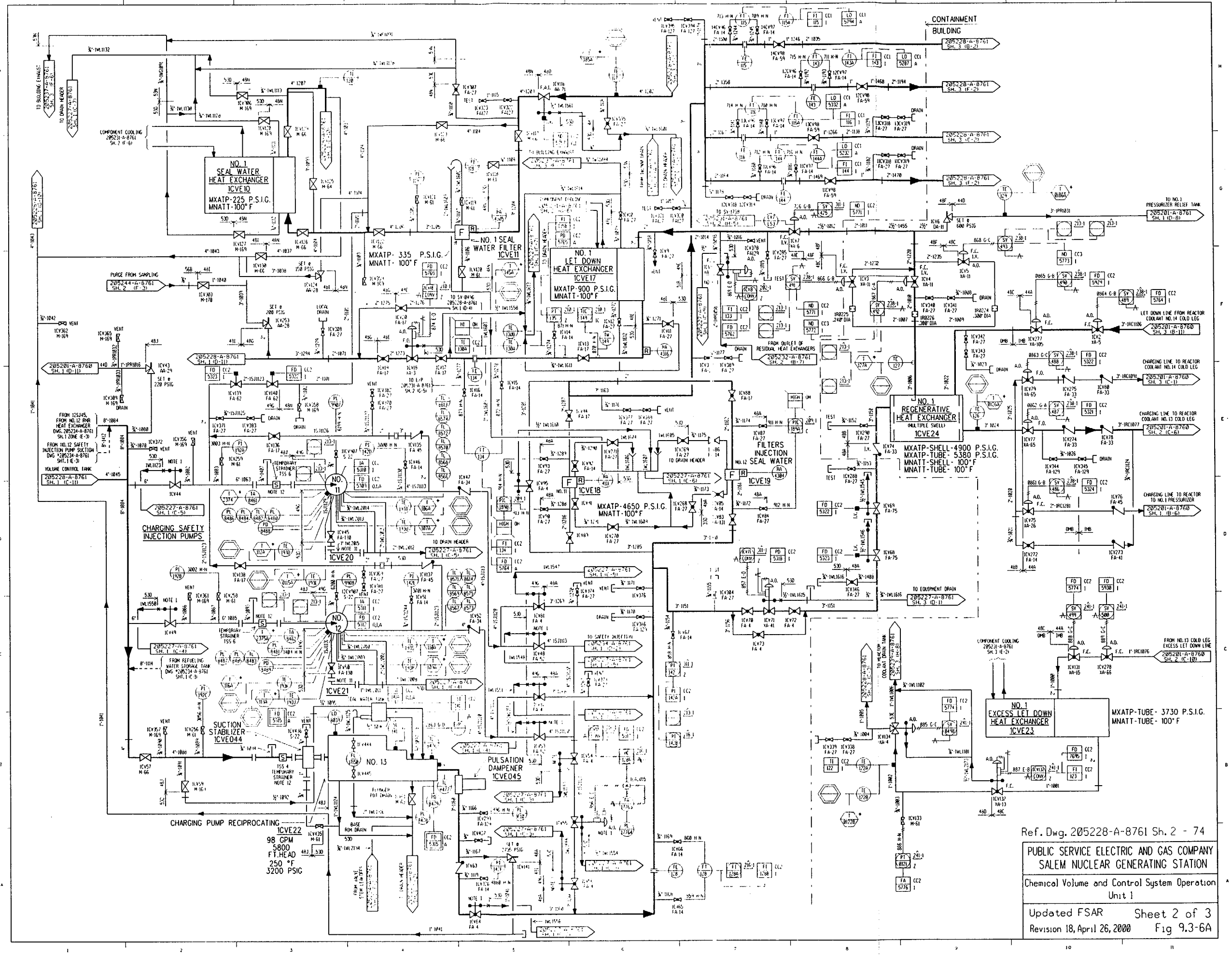

Ref. Dwg. 205228-A-8761 Sh. 2 - 74

PUBLIC SERVICE ELECTRIC AND GAS COMPANY
SALEM NUCLEAR GENERATING STATION

Chemical Volume and Control System Operation
Unit 1

Updated FSAR — Sheet 2 of 3

Revision 18, April 26, 2000 — Fig 9.3-6A

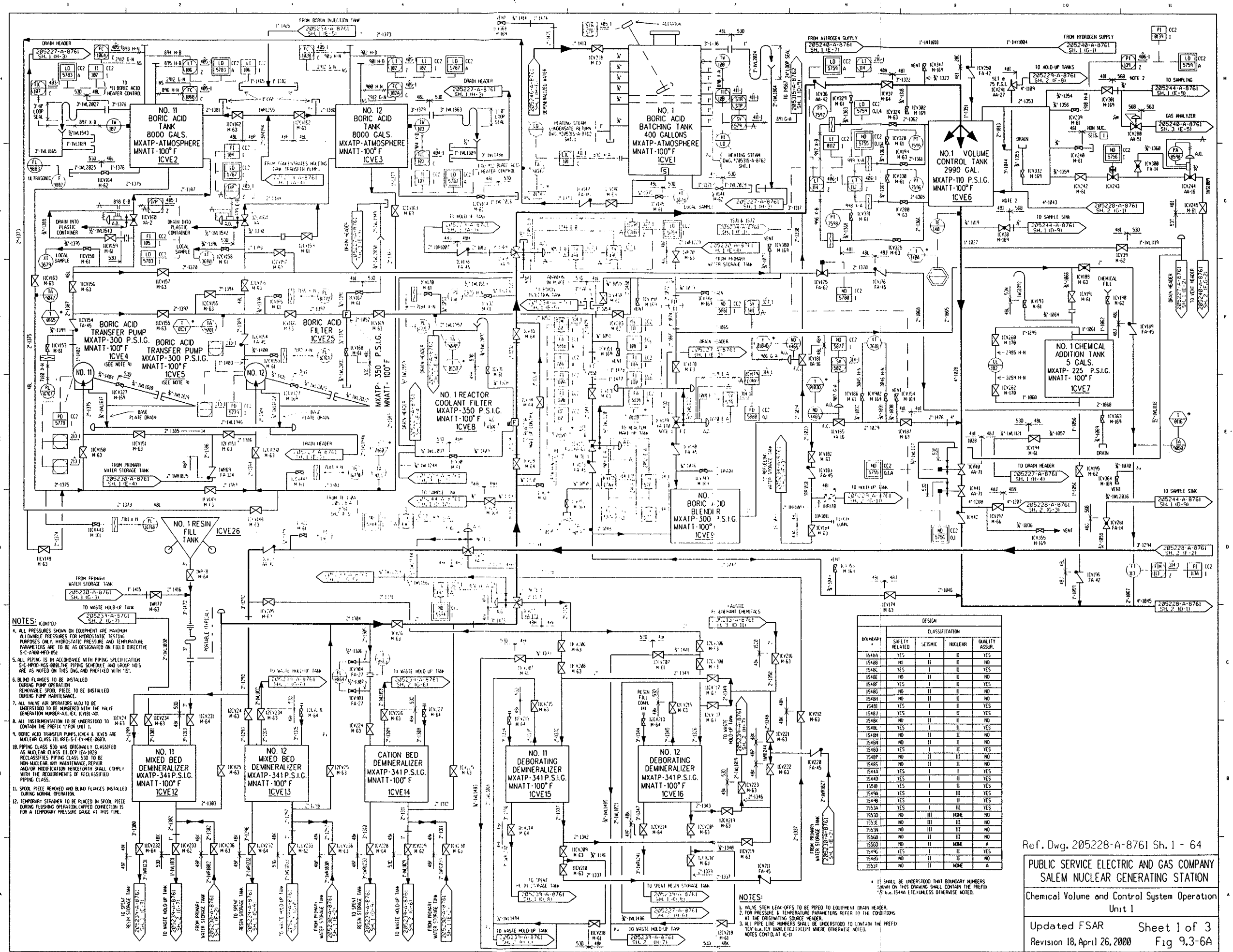

BOUNDARY *	DESIGN CLASSIFICATION			
	SAFETY RELATED	SEISMIC	NUCLEAR	QUALITY ASSUR.
1548A	YES	I	II	YES
1548B	NO	II	II	NO
1548C	YES	I	II	YES
1548E	NO	II	II	NO
1548F	YES	I	II	YES
1548G	NO	II	II	NO
1548H	NO	II	II	NO
1548I	YES	I	II	YES
1548J	YES	I	II	YES
1548K	NO	II	II	NO
1548L	YES	I	II	YES
1548M	NO	II	II	NO
1548N	NO	II	II	NO
1548O	YES	I	II	YES
1548P	NO	II	III	NO
1548S	NO	II	II	NO
1544A	YES	I	I	YES
1544D	YES	I	II	YES
1550B	YES	I	II	YES
1549A	YES	I	III	YES
1549B	YES	I	II	YES
1553A	YES	I	III	YES
1553D	NO	III	NONE	NO
1553E	NO	III	III	NO
1553H	NO	III	III	NO
1556B	NO	II	II	NO
1556D	NO	II	NONE	A
1549C	YES	I	II	YES
1549D	NO	II	II	NO
1553I	NO	II	NONE	A

* IT SHALL BE UNDERSTOOD THAT BOUNDARY NUMBERS SHOWN ON THIS DRAWING SHALL CONTAIN THE PREFIX "1" (i.e. 1544A ETC.) UNLESS OTHERWISE NOTED.

Ref. Dwg. 205228-A-8761 Sh. 1 - 64

PUBLIC SERVICE ELECTRIC AND GAS COMPANY
SALEM NUCLEAR GENERATING STATION

Chemical Volume and Control System Operation
Unit 1

Updated FSAR
Revision 18, April 26, 2000

Sheet 1 of 3
Fig 9.3-6A

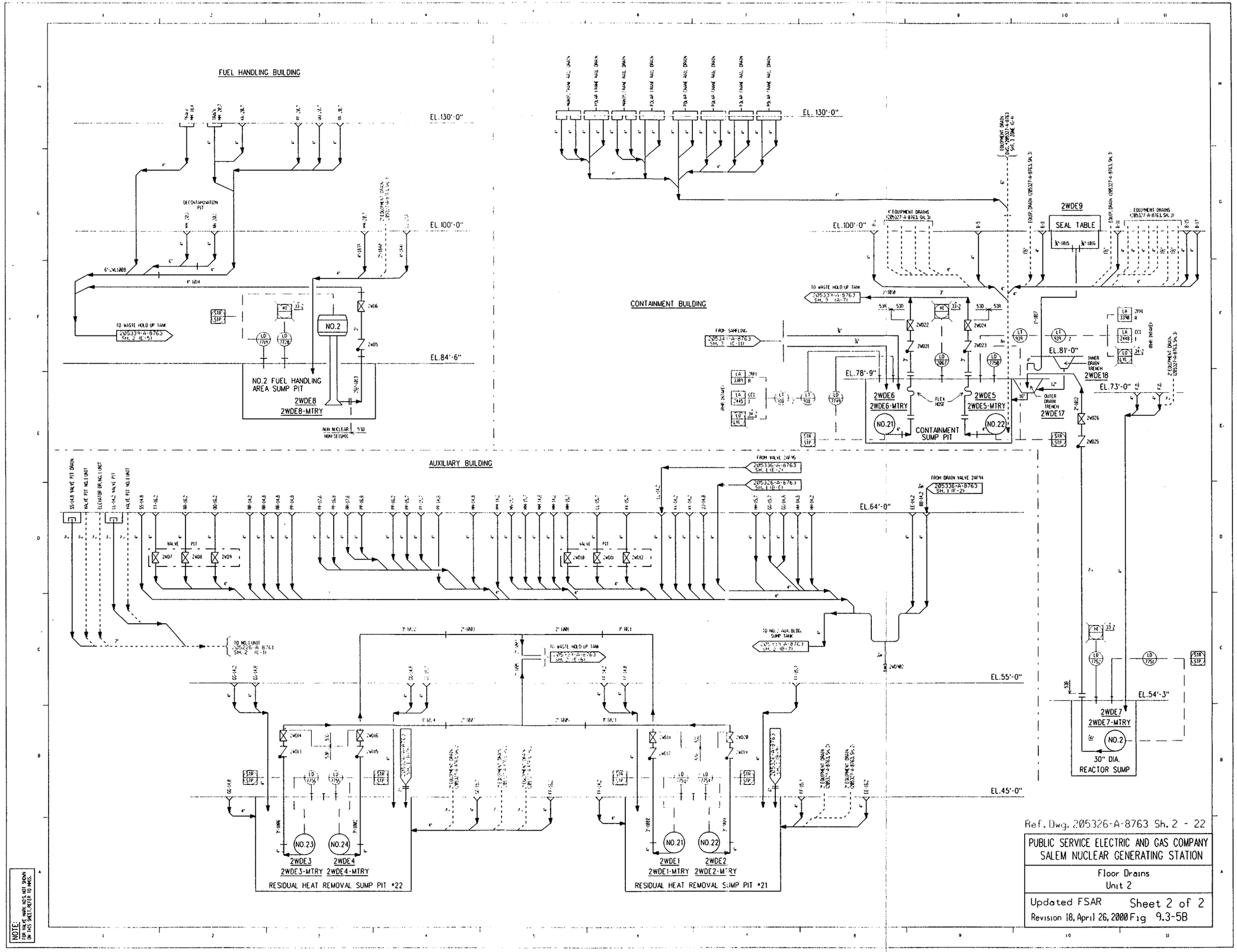

Ref. Dwg. 205326-A-8763 Sh. 2 - 22

PUBLIC SERVICE ELECTRIC AND GAS COMPANY
SALEM NUCLEAR GENERATING STATION

Floor Drains
Unit 2

Updated FSAR Sheet 2 of 2
Revision 18, April 26, 2000 Fig 9.3-5B

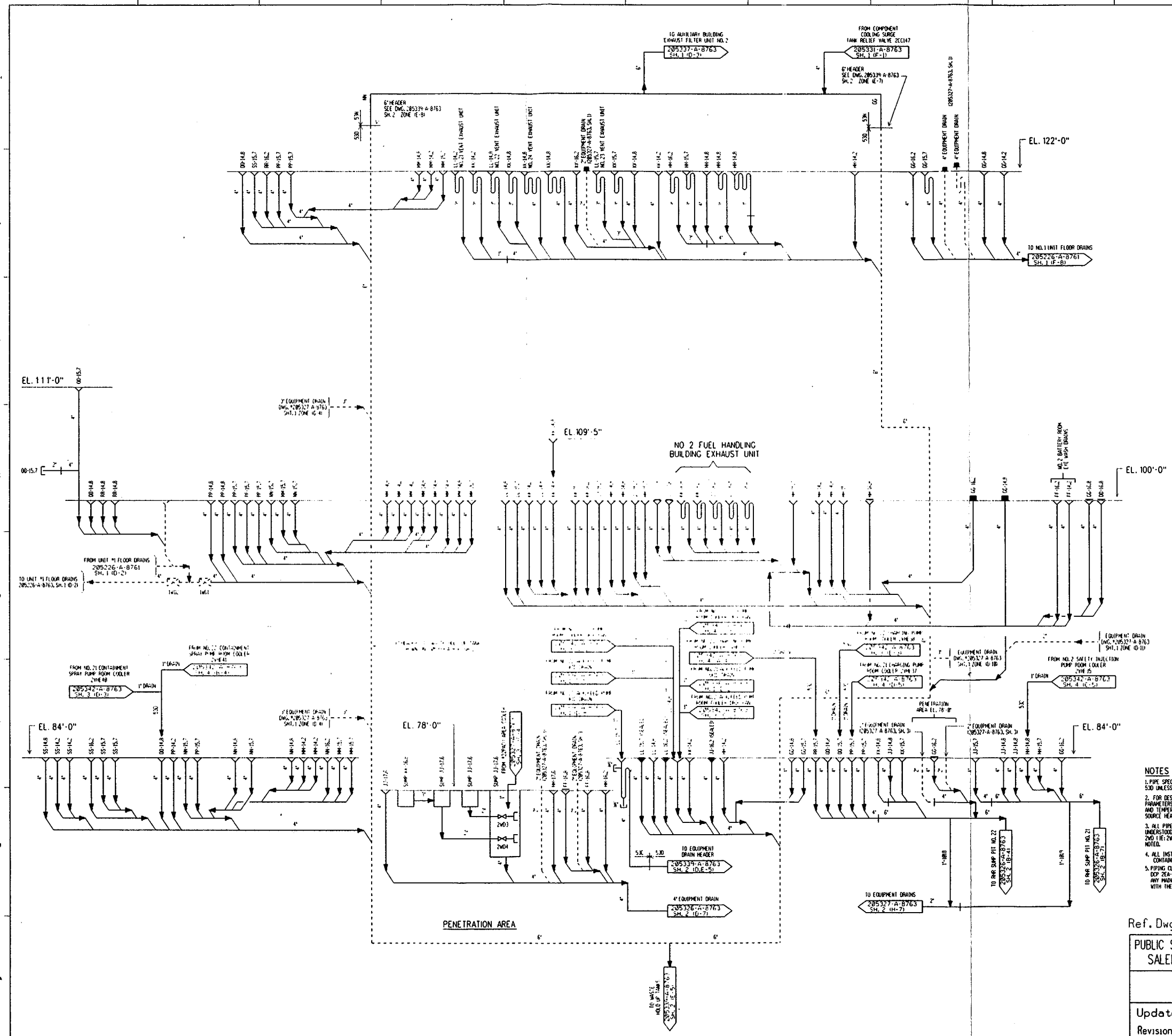

NOTES

1. PIPE SPECIFICATIONS SHALL BE 530 UNLESS OTHERWISE NOTED.
2. FOR DESIGN PRESSURE AND TEMPERATURE PARAMETERS REFER TO THE DESIGN PRESSURE AND TEMPERATURE PARAMETERS AT THE ORIGINAL SOURCE HEADERS.
3. ALL PIPE LINE NUMBERS SHALL BE UNDERSTOOD TO CONTAIN THE PREFIX 2WD11E: 2WD1000, ETC.) EXCEPT WHERE OTHERWISE NOTED.
4. ALL INSTRUMENTATION TO BE UNDERSTOOD TO CONTAIN THE PREFIX "2" FOR UNIT 2.
5. PIPING CLASS 530 WAS ORIGINALLY CLASSIFIED AS NUCLEAR CLASS III. DCP 2EA-1802 RECLASSIFIES PIPING CLASS 530 TO BE NON-NUCLEAR. ANY MAINTENANCE, REPAIR AND/OR MODIFICATION HENCEFORTH SHALL COMPLY WITH THE REQUIREMENTS OF RECLASSIFIED PIPING CLASS.

Ref. Dwg. 205326-A-8763 Sh. 1 - 25

PUBLIC SERVICE ELECTRIC AND GAS COMPANY
SALEM NUCLEAR GENERATING STATION

Floor Drains
Unit 2

Updated FSAR — Sheet 1 of 2
Revision 18, April 26, 2000 — Fig 9.3-5B

NOTE: FOR NUMBER DESIGNATION SHOWN ON THIS SHEET REFER TO SPEC.

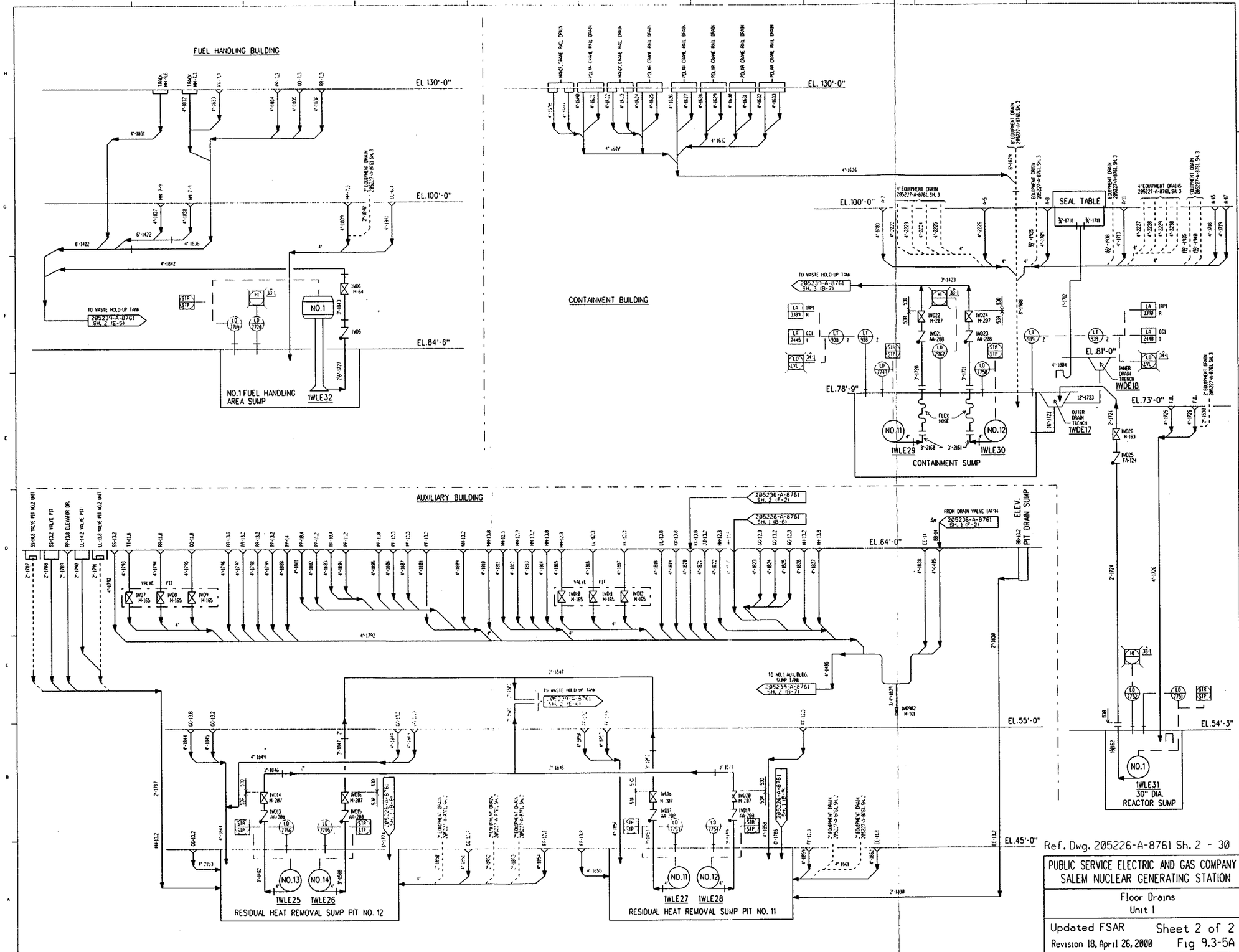

Ref. Dwg. 205226-A-8761 Sh. 2 - 30

PUBLIC SERVICE ELECTRIC AND GAS COMPANY
SALEM NUCLEAR GENERATING STATION

Floor Drains
Unit 1

Updated FSAR Sheet 2 of 2
Revision 18, April 26, 2000 Fig 9.3-5A

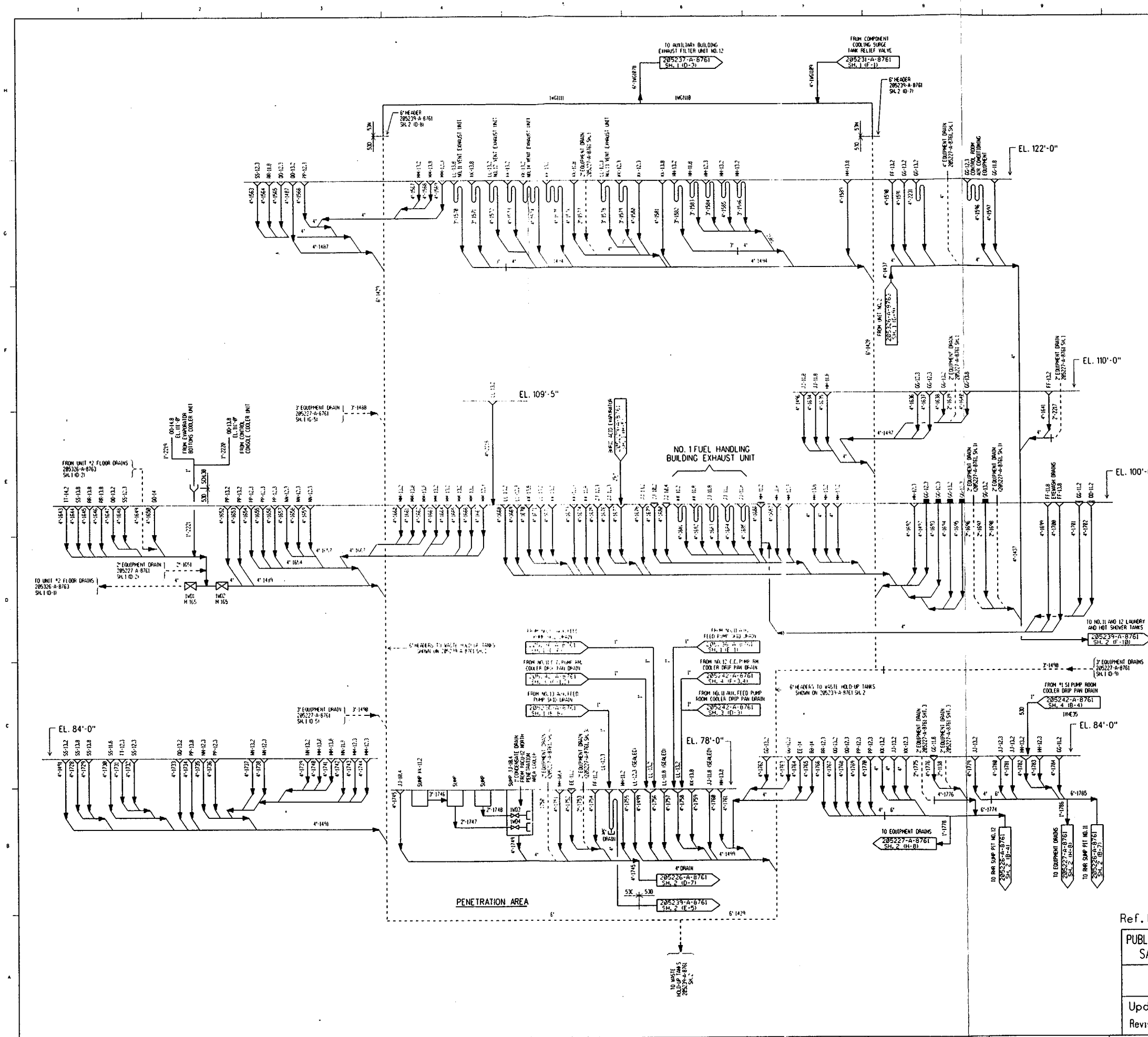

REFERENCE DRAWINGS

EQUIPMENT VENTS AND DRAINS CONTAMINATED
DIAGRAM ____ 205227-A-8761
WASTE DISPOSAL - GAS ____ DIAGRAM ____ 205239-A-8761
SUMP & FLOOR PUMPS CONTAMINATED
INSTR.SCH. ____ 233621-B-9611-8
AUXILIARY ANNUNCIATOR SYSTEM CAB. #33 ____
WIRING DIAG. ____ 220478-A-1320
LEGEND SHEET ____ ____ ____ 600658-A-8727
205226-A-8761 ____ SH. 1 ____ AUX. BLDG. & PEN. AREA EL.84', 100', 110' & 122'
SH. 2 ____ CONT., F.H.BLDG. & AUX.BLDG. EL.45', 55' & 64'

NOTES

1. PIPE SPECIFICATIONS SHALL BE 530 REFER TO PIPE SPECIFICATION NO. S-C-HPDD-MGS-0001.
2. FOR DESIGN PRESSURE AND TEMPERATURE PARAMETERS REFER TO THE DESIGN PRESSURE AND TEMPERATURE PARAMETERS AT THE ORIGINAL SOURCE HEADERS.
3. ALL PIPE LINE NUMBERS SHALL BE UNDERSTOOD TO CONTAIN THE PREFIX 1WL (IE: 1WL1000, ETC.) EXCEPT WHERE OTHERWISE NOTED.
4. ALL INSTRUMENTATION TO BE UNDERSTOOD TO CONTAIN THE PREFIX "1" FOR UNIT 1.
5. PIPING CLASS 530 WAS ORIGINALLY CLASSIFIED AS NUCLEAR CLASS III. DCP 1EA-1028 RECLASSIFIES PIPING CLASS 530 TO BE NON-NUCLEAR. ANY MAINTENANCE, REPAIR AND/OR MODIFICATION HENCEFORTH SHALL COMPLY WITH THE REQUIREMENTS OF RECLASSIFIED PIPING CLASS.

Ref. Dwg. 205226-A-8761 Sh. 1 - 31

PUBLIC SERVICE ELECTRIC AND GAS COMPANY
SALEM NUCLEAR GENERATING STATION

Floor Drains
Unit 1

Updated FSAR — Sheet 1 of 2
Revision 18, April 26, 2000 — Fig 9.3-5A

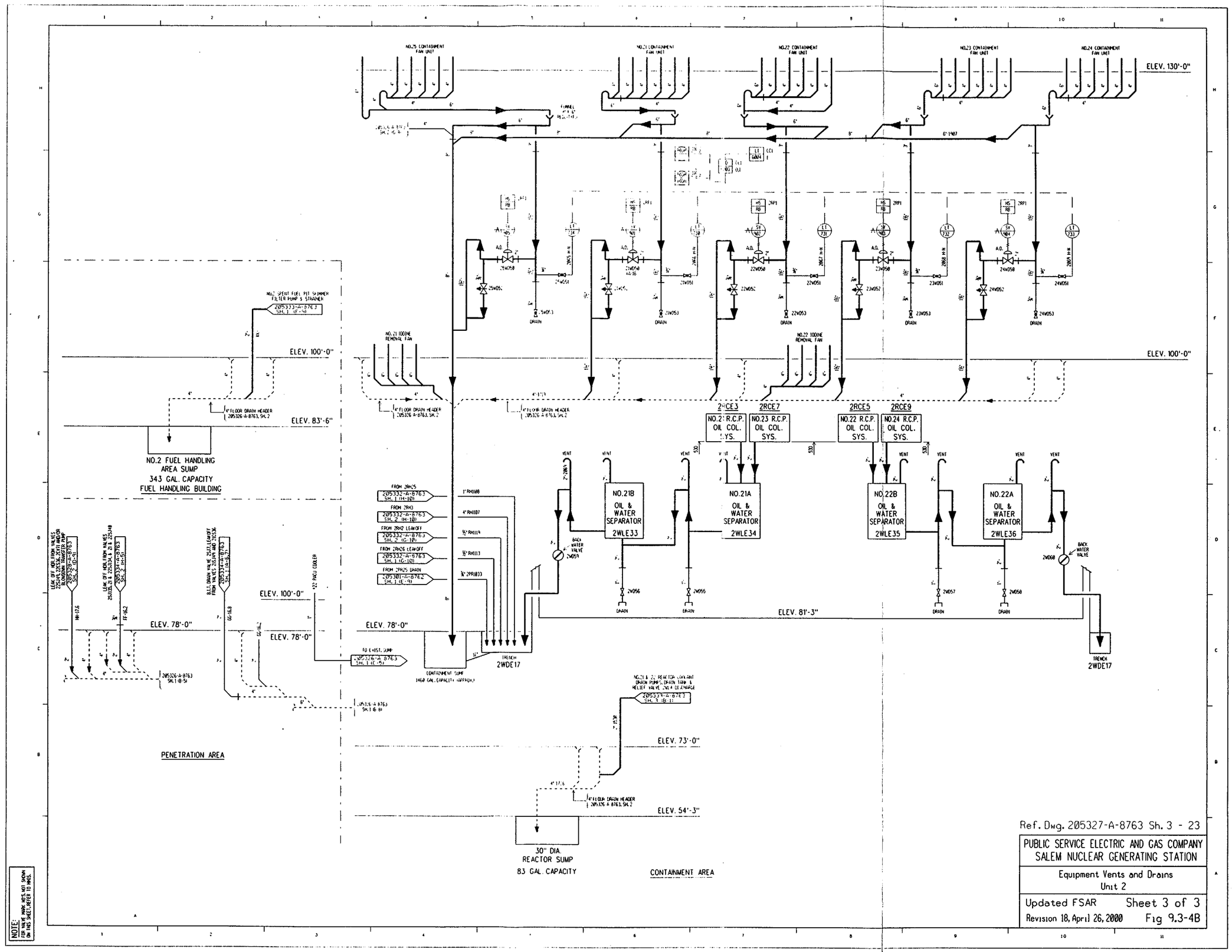

Ref. Dwg. 205327-A-8763 Sh. 3 - 23

PUBLIC SERVICE ELECTRIC AND GAS COMPANY
SALEM NUCLEAR GENERATING STATION

Equipment Vents and Drains
Unit 2

Updated FSAR Sheet 3 of 3
Revision 18, April 26, 2000 Fig 9.3-4B

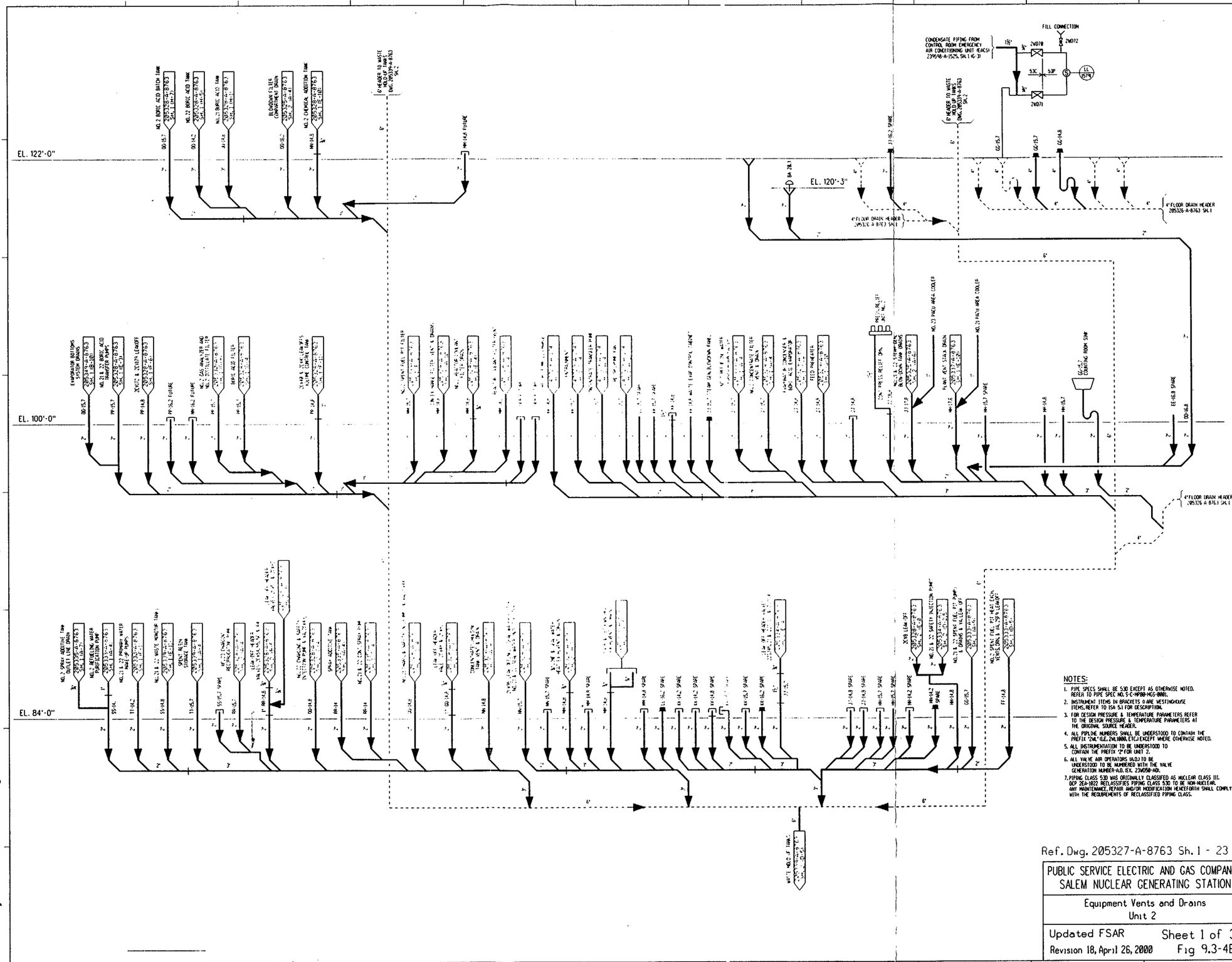

Ref. Dwg. 205327-A-8763 Sh. 1 - 23

PUBLIC SERVICE ELECTRIC AND GAS COMPANY
SALEM NUCLEAR GENERATING STATION

Equipment Vents and Drains
Unit 2

Updated FSAR — Sheet 1 of 3
Revision 18, April 26, 2000 — Fig 9.3-4B

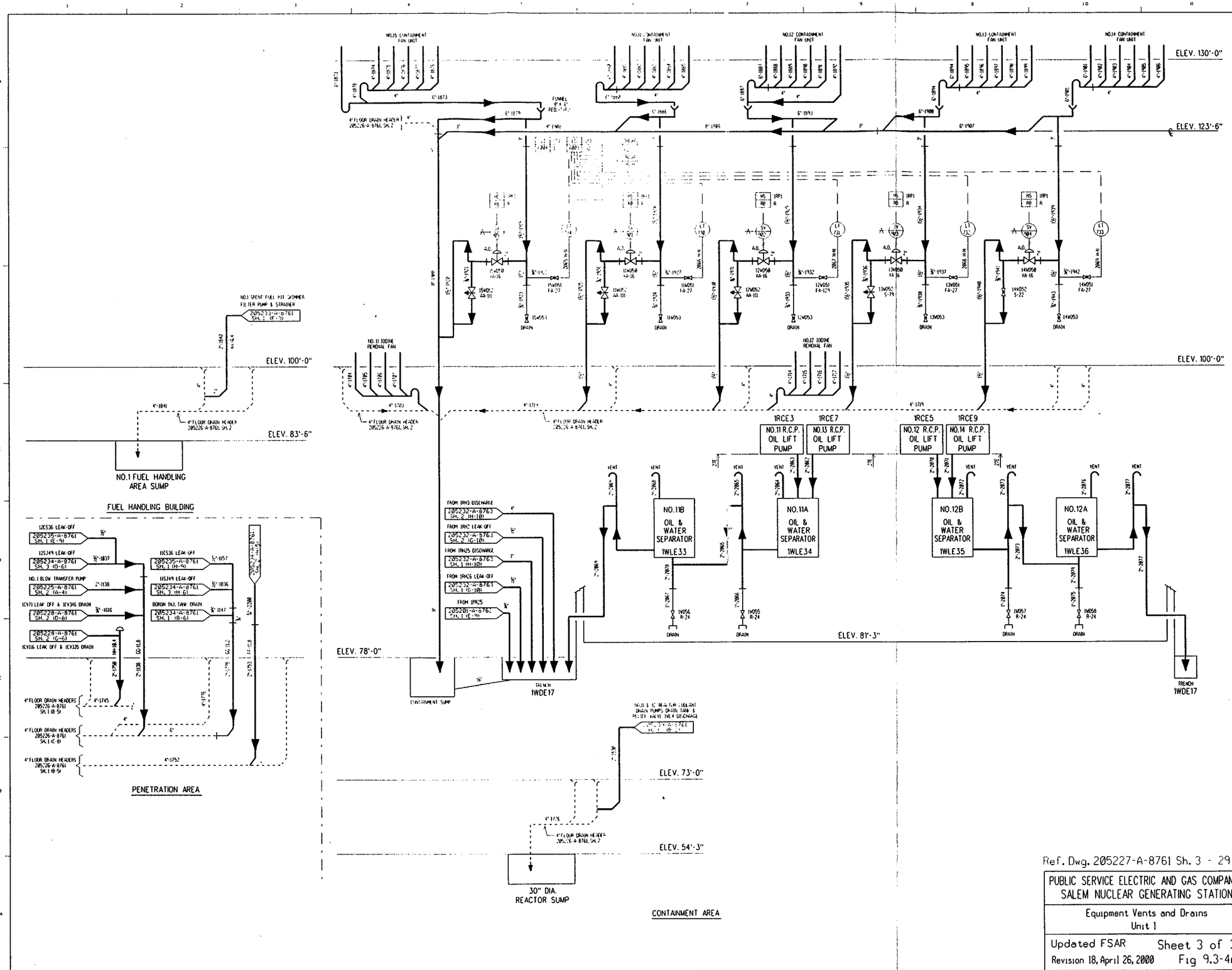

Ref. Dwg. 205227-A-8761 Sh. 3 - 29

PUBLIC SERVICE ELECTRIC AND GAS COMPANY
SALEM NUCLEAR GENERATING STATION

Equipment Vents and Drains
Unit 1

Updated FSAR Sheet 3 of 3
Revision 18, April 26, 2000 Fig 9.3-4A

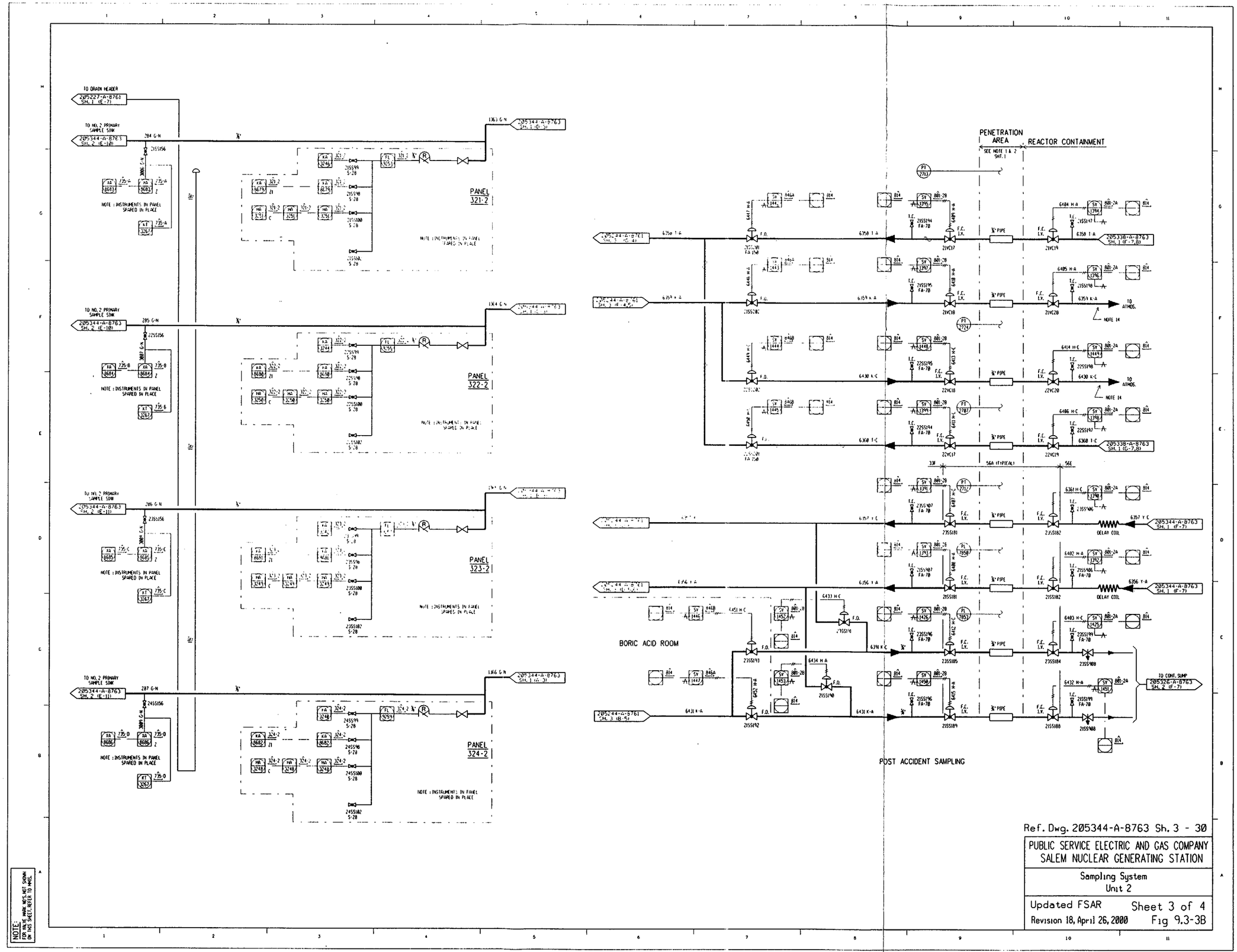

Ref. Dwg. 205344-A-8763 Sh. 3 - 30

PUBLIC SERVICE ELECTRIC AND GAS COMPANY
SALEM NUCLEAR GENERATING STATION

Sampling System
Unit 2

Updated FSAR — Sheet 3 of 4

Revision 18, April 26, 2000 — Fig 9.3-3B

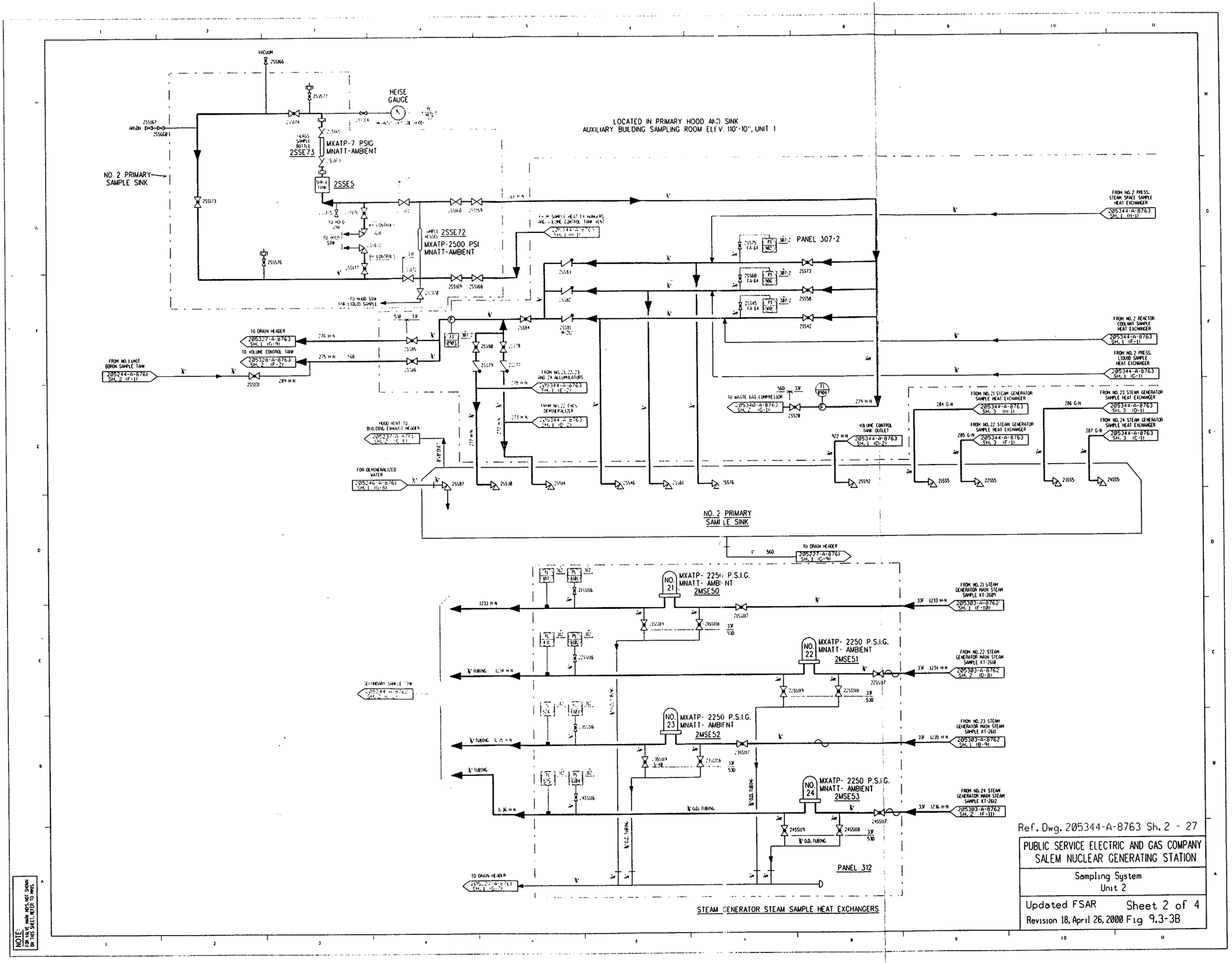

Ref. Dwg. 205344-A-8763 Sh. 2 - 27

PUBLIC SERVICE ELECTRIC AND GAS COMPANY
SALEM NUCLEAR GENERATING STATION

Sampling System
Unit 2

Updated FSAR Sheet 2 of 4
Revision 18, April 26, 2000 Fig 9.3-3B

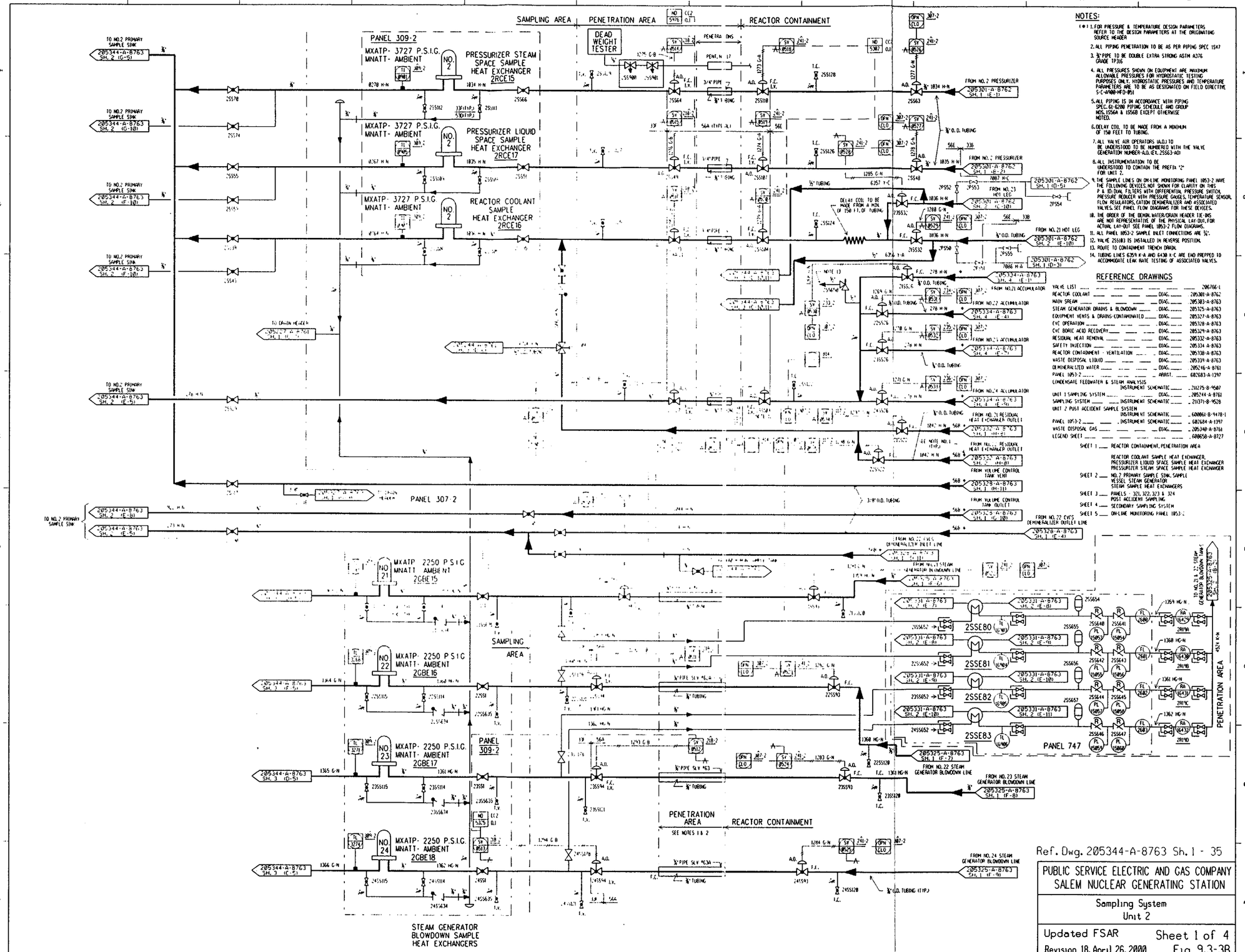

NOTES:

1. FOR PRESSURE & TEMPERATURE DESIGN PARAMETERS REFER TO THE DESIGN PARAMETERS AT THE ORIGINATING SOURCE HEADER.
2. ALL PIPING PENETRATION TO BE AS PER PIPING SPEC 1547
3. ¾" PIPE TO BE DOUBLE EXTRA STRONG ASTM A376 GRADE TP316
4. ALL PRESSURES SHOWN ON EQUIPMENT ARE MAXIMUM ALLOWABLE PRESSURES FOR HYDROSTATIC TESTING PURPOSES ONLY. HYDROSTATIC PRESSURES AND TEMPERATURE PARAMETERS ARE TO BE AS DESIGNATED ON FIELD DIRECTIVE S-C-A900-MFD-051
5. ALL PIPING IS IN ACCORDANCE WITH PIPING SPEC. G1-G200 PIPING SCHEDULE AND GROUP NOS. 1556A & 1556B EXCEPT OTHERWISE NOTED.
6. DELAY COIL TO BE MADE FROM A MINIMUM OF 150 FEET OF TUBING.
7. ALL VALVE AIR OPERATORS (A.O.) TO BE UNDERSTOOD TO BE NUMBERED WITH THE VALVE GENERATION NUMBER-A.O. (E.G. 25563-AO)
8. ALL INSTRUMENTATION TO BE UNDERSTOOD TO CONTAIN THE PREFIX "2" FOR UNIT 2.
9. THE SAMPLE LINES ON ON-LINE MONITORING PANEL 1053-2 HAVE THE FOLLOWING DEVICES NOT SHOWN FOR CLARITY ON THIS P & ID: DUAL FILTERS WITH DIFFERENTIAL PRESSURE SWITCH, PRESSURE REDUCER WITH PRESSURE GAUGES, TEMPERATURE SENSOR, FLOW REGULATORS, CATION DEMINERALIZER AND ASSOCIATED VALVES. SEE PANEL FLOW DIAGRAMS FOR THESE DEVICES.
10. THE ORDER OF THE DEMINERALIZER/DRAIN HEADER TIE-INS ARE NOT REPRESENTATIVE OF THE PHYSICAL LAY-OUT. FOR ACTUAL LAY-OUT SEE PANEL 1053-2 FLOW DIAGRAMS.
11. ALL PANEL 1053-2 SAMPLE INLET CONNECTIONS ARE ¾".
12. VALVE 25510 IS INSTALLED IN REVERSE POSITION.
13. ROUTE TO CONTAINMENT TRENCH DRAIN.
14. TUBING LINES 6259 K-A AND 6430 K-C ARE END PREPPED TO ACCOMMODATE LEAK RATE TESTING OF ASSOCIATED VALVES.

REFERENCE DRAWINGS

VALVE LIST		206766-1
REACTOR COOLANT	DIAG.	205301-A-8762
MAIN STEAM	DIAG.	205303-A-8763
STEAM GENERATOR DRAINS & BLOWDOWN	DIAG.	205325-A-8763
EQUIPMENT VENTS & DRAINS-CONTAMINATED	DIAG.	205327-A-8763
CVC OPERATION	DIAG.	205328-A-8763
CVC BORIC ACID RECOVERY	DIAG.	205329-A-8763
RESIDUAL HEAT REMOVAL	DIAG.	205332-A-8763
SAFETY INJECTION	DIAG.	205334-A-8763
REACTOR CONTAINMENT - VENTILATION	DIAG.	205338-A-8763
WASTE DISPOSAL LIQUID	DIAG.	205339-A-8763
DEMINERALIZED WATER	DIAG.	205246-A-8761
PANEL 1053-2	ARRANT.	682683-A-1397
CONDENSATE FEEDWATER & STEAM ANALYSIS		
INSTRUMENT SCHEMATIC		211275-B-9587
UNIT 1 SAMPLING SYSTEM	DIAG.	205244-A-8761
SAMPLING SYSTEM INSTRUMENT SCHEMATIC		211371-B-9528
UNIT 2 POST ACCIDENT SAMPLE SYSTEM		
INSTRUMENT SCHEMATIC		600861-B-9478-1
PANEL 1053-2 INSTRUMENT SCHEMATIC		682684-A-1397
WASTE DISPOSAL GAS	DIAG.	205340-A-8761
LEGEND SHEET		600658-A-8727

SHEET 1 — REACTOR CONTAINMENT, PENETRATION AREA
REACTOR COOLANT SAMPLE HEAT EXCHANGER, PRESSURIZER LIQUID SPACE SAMPLE HEAT EXCHANGER PRESSURIZER STEAM SPACE SAMPLE HEAT EXCHANGER
SHEET 2 — NO.2 PRIMARY SAMPLE SINK, SAMPLE VESSEL, STEAM GENERATOR STEAM SAMPLE HEAT EXCHANGERS
SHEET 3 — PANELS - 321, 322, 323 & 324 POST ACCIDENT SAMPLING
SHEET 4 — SECONDARY SAMPLING SYSTEM
SHEET 5 — ON-LINE MONITORING PANEL 1053-2

Ref. Dwg. 205344-A-8763 Sh. 1 - 35

PUBLIC SERVICE ELECTRIC AND GAS COMPANY
SALEM NUCLEAR GENERATING STATION

Sampling System
Unit 2

Updated FSAR — Sheet 1 of 4
Revision 18, April 26, 2000 — Fig 9.3-3B

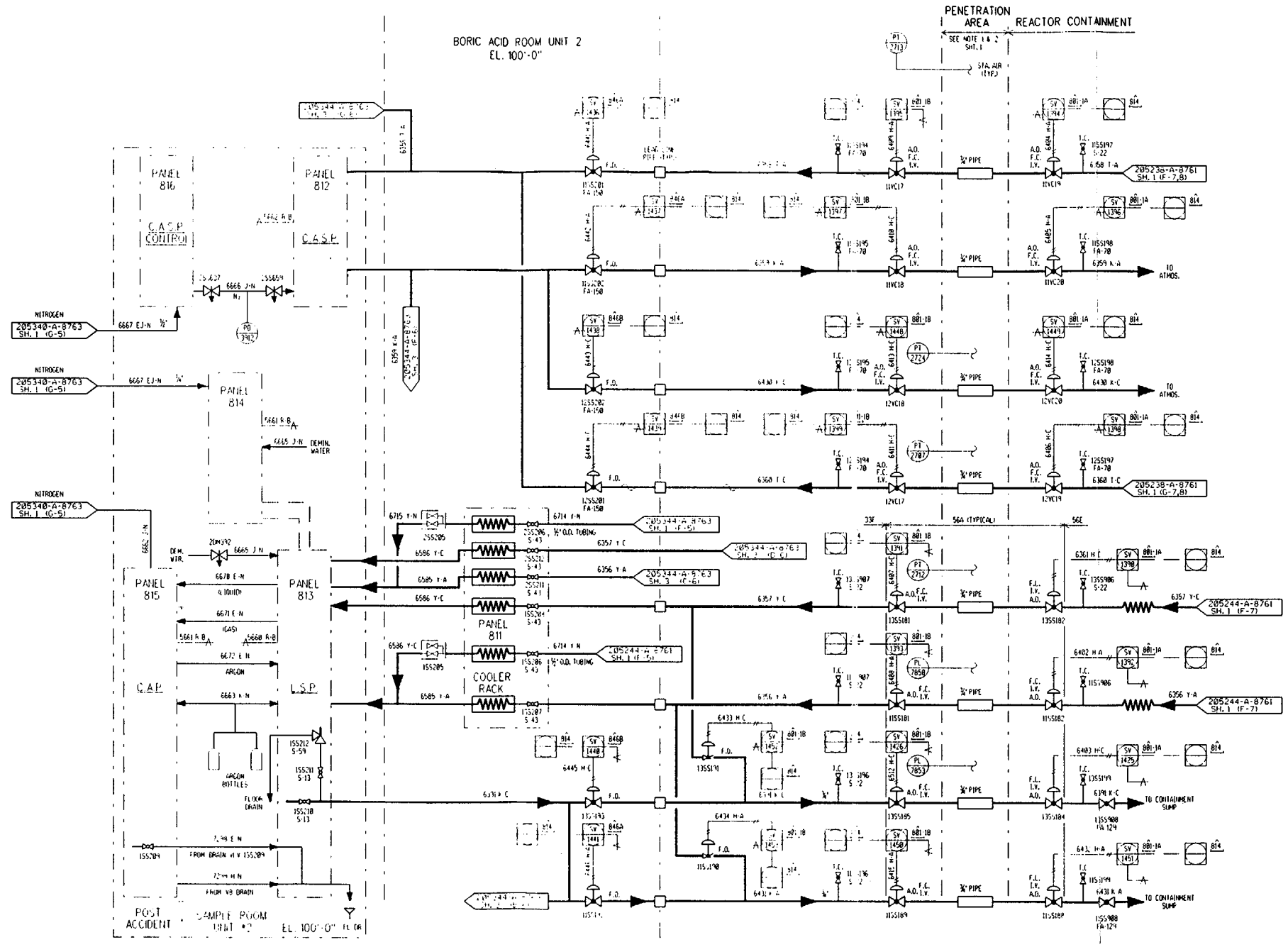

Ref. Dwg. 205244-A-8761 Sh. 3 - 32

PUBLIC SERVICE ELECTRIC AND GAS COMPANY
SALEM NUCLEAR GENERATING STATION

Sampling System
Unit 1

Updated FSAR Sheet 3 of 4
Revision 18, April 26, 2000 Fig 9.3-3A

NOTE:
FOR VALVE MARK NO'S. NOT SHOWN ON THIS SHEET, REFER TO MMS.

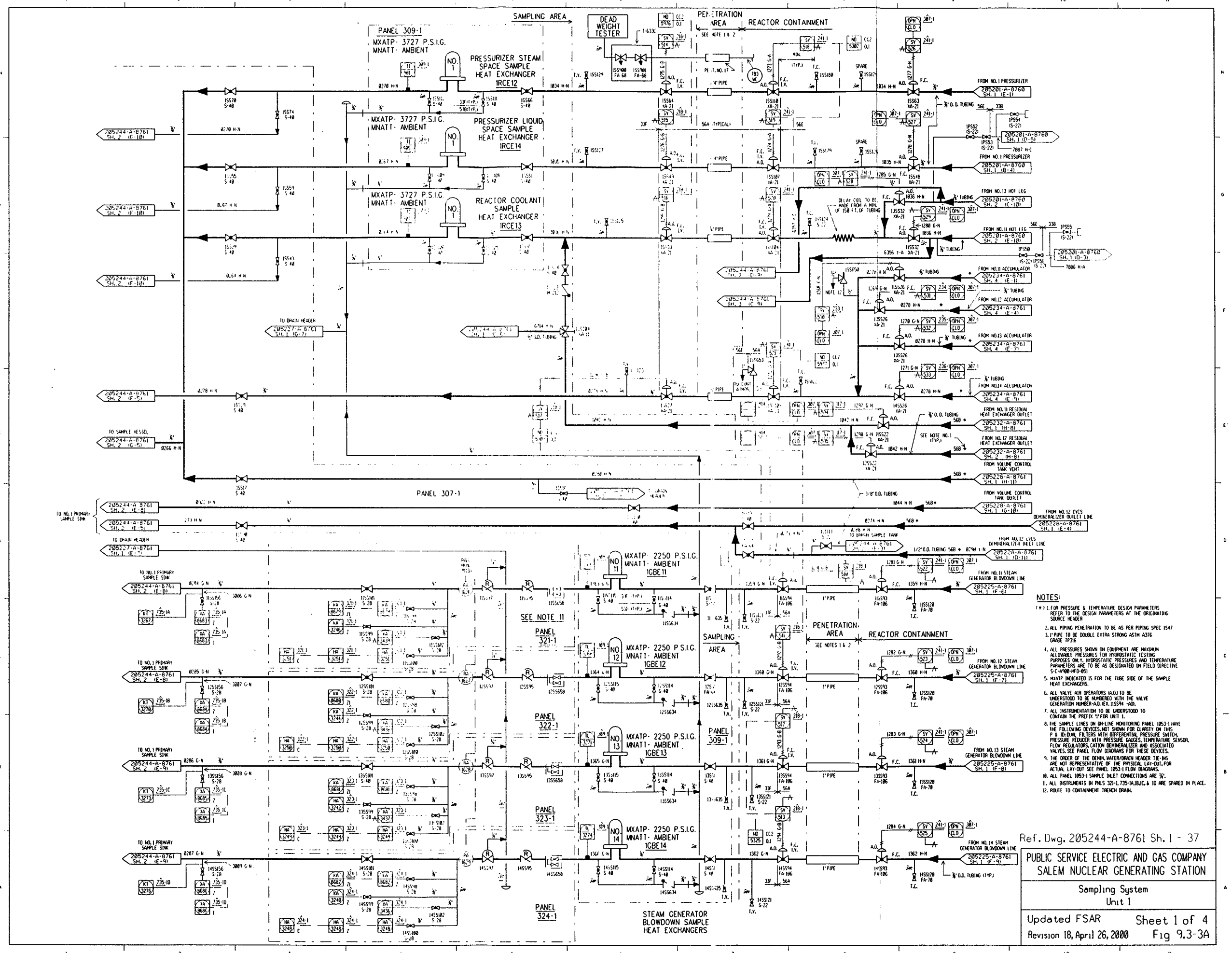

NOTES:

(*) 1. FOR PRESSURE & TEMPERATURE DESIGN PARAMETERS REFER TO THE DESIGN PARAMETERS AT THE ORIGINATING SOURCE HEADER

2. ALL PIPING PENETRATION TO BE AS PER PIPING SPEC 1547
3. 1" PIPE TO BE DOUBLE EXTRA STRONG ASTM A376 GRADE TP316
4. ALL PRESSURES SHOWN ON EQUIPMENT ARE MAXIMUM ALLOWABLE PRESSURES FOR HYDROSTATIC TESTING PURPOSES ONLY. HYDROSTATIC PRESSURES AND TEMPERATURE PARAMETERS ARE TO BE AS DESIGNATED ON FIELD DIRECTIVE S-C-4700-MFD-051
5. MXATP INDICATED IS FOR THE TUBE SIDE OF THE SAMPLE HEAT EXCHANGERS.
6. ALL VALVE AIR OPERATORS (A.O.) TO BE UNDERSTOOD TO BE NUMBERED WITH THE VALVE GENERATION NUMBER-A.O. (EX. 1155594 -A.O.
7. ALL INSTRUMENTATION TO BE UNDERSTOOD TO CONTAIN THE PREFIX "1" FOR UNIT 1.
8. THE SAMPLE LINES ON ON-LINE MONITORING PANEL 1053-1 HAVE THE FOLLOWING DEVICES, NOT SHOWN FOR CLARITY ON THIS P & ID: DUAL FILTERS WITH DIFFERENTIAL PRESSURE SWITCH, PRESSURE REDUCER WITH PRESSURE GAUGES, TEMPERATURE SENSOR, FLOW REGULATORS, CATION DEMINERALIZER AND ASSOCIATED VALVES. SEE PANEL FLOW DIAGRAMS FOR THESE DEVICES.
9. THE ORDER OF THE DEMIN. WATER/DRAIN HEADER TIE-INS ARE NOT REPRESENTATIVE OF THE PHYSICAL LAY-OUT, FOR ACTUAL LAY-OUT SEE PANEL 1053-1 FLOW DIAGRAMS.
10. ALL PANEL 1053-1 SAMPLE INLET CONNECTIONS ARE ¾".
11. ALL INSTRUMENTS IN PNLS 321-1, 735-1A,1B,1C, & 1D ARE SPARED IN PLACE.
12. ROUTE TO CONTAINMENT TRENCH DRAIN.

Ref. Dwg. 205244-A-8761 Sh. 1 - 37

PUBLIC SERVICE ELECTRIC AND GAS COMPANY
SALEM NUCLEAR GENERATING STATION

Sampling System
Unit 1

Updated FSAR — Sheet 1 of 4
Revision 18, April 26, 2000 — Fig 9.3-3A

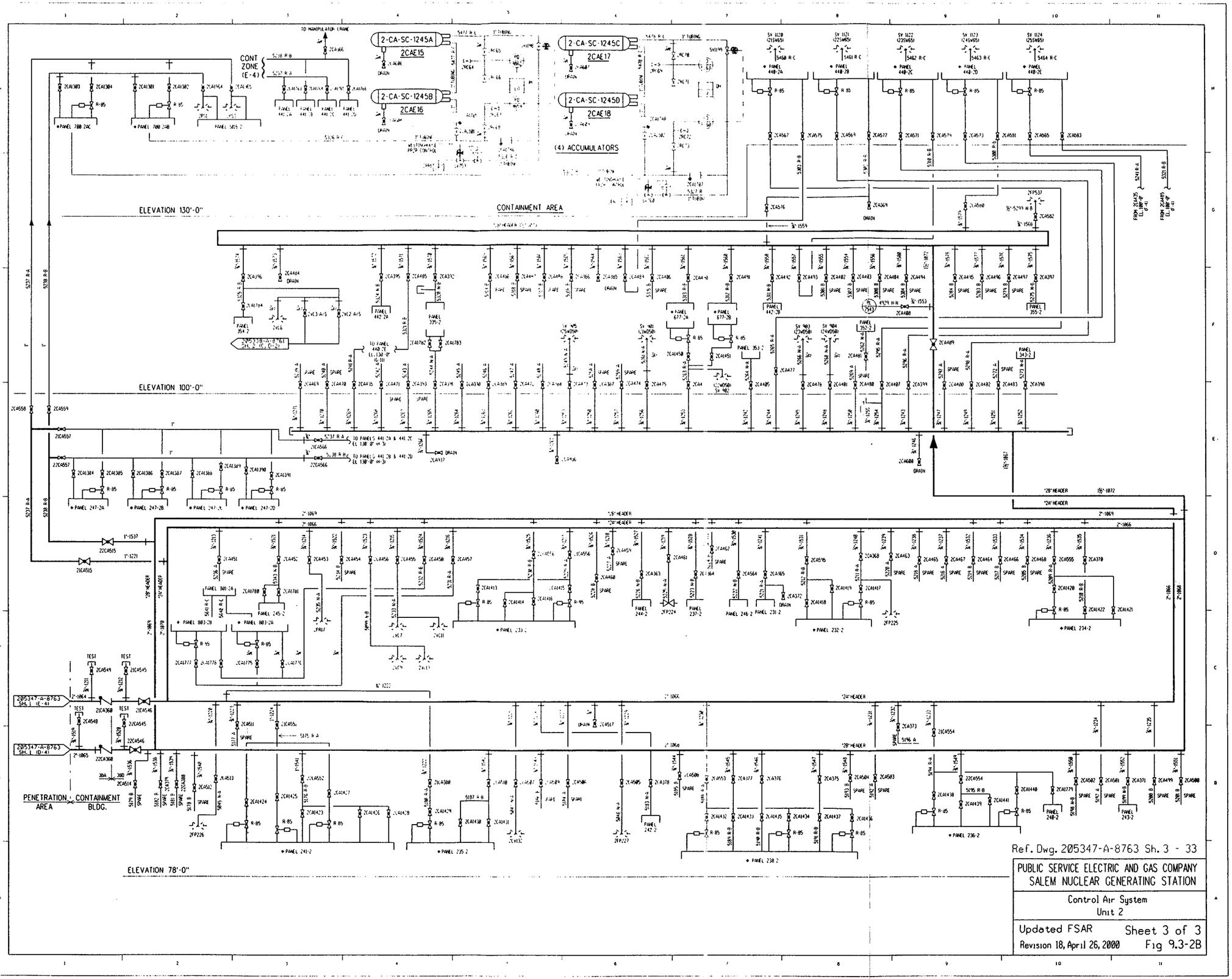

Ref. Dwg. 205347-A-8763 Sh. 3 - 33

PUBLIC SERVICE ELECTRIC AND GAS COMPANY
SALEM NUCLEAR GENERATING STATION

Control Air System
Unit 2

Updated FSAR
Revision 18, April 26, 2000

Sheet 3 of 3
Fig 9.3-2B

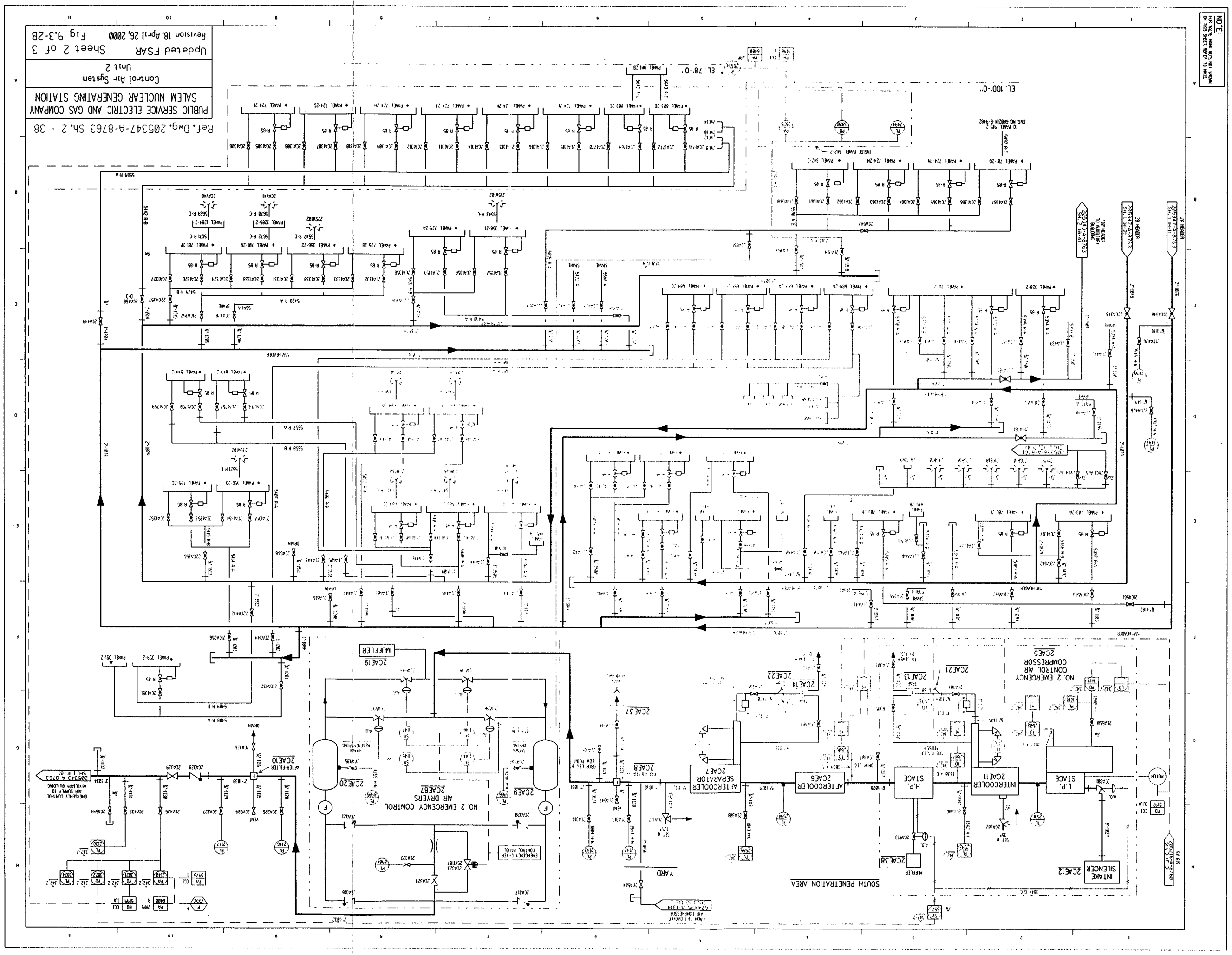

PUBLIC SERVICE ELECTRIC AND GAS COMPANY
SALEM NUCLEAR GENERATING STATION
Control Air System
Unit 2
Updated FSAR Sheet 2 of 3
Revision 18, April 26, 2000 Fig 9.3-2B
Ref. Dwg. 205347-A-8763 Sh. 2 - 38
NOTE:
FOR VALVE WARM NO'S. NOT SHOWN ON THIS SHEET, REFER TO MMS.
EL. 78'-0"
EL. 100'-0"
NO. 2 EMERGENCY CONTROL AIR COMPRESSOR 2CAE5
NO. 2 EMERGENCY CONTROL AIR DRYERS 2CAE87
AFTERCOOLER SEPARATOR 2CAE7
AFTERCOOLER 2CAE6
H.P. STAGE
INTERCOOLER 2CAE11
L.P. STAGE
INTAKE SILENCER 2CAE12
MUFFLER
SOUTH PENETRATION AREA
YARD

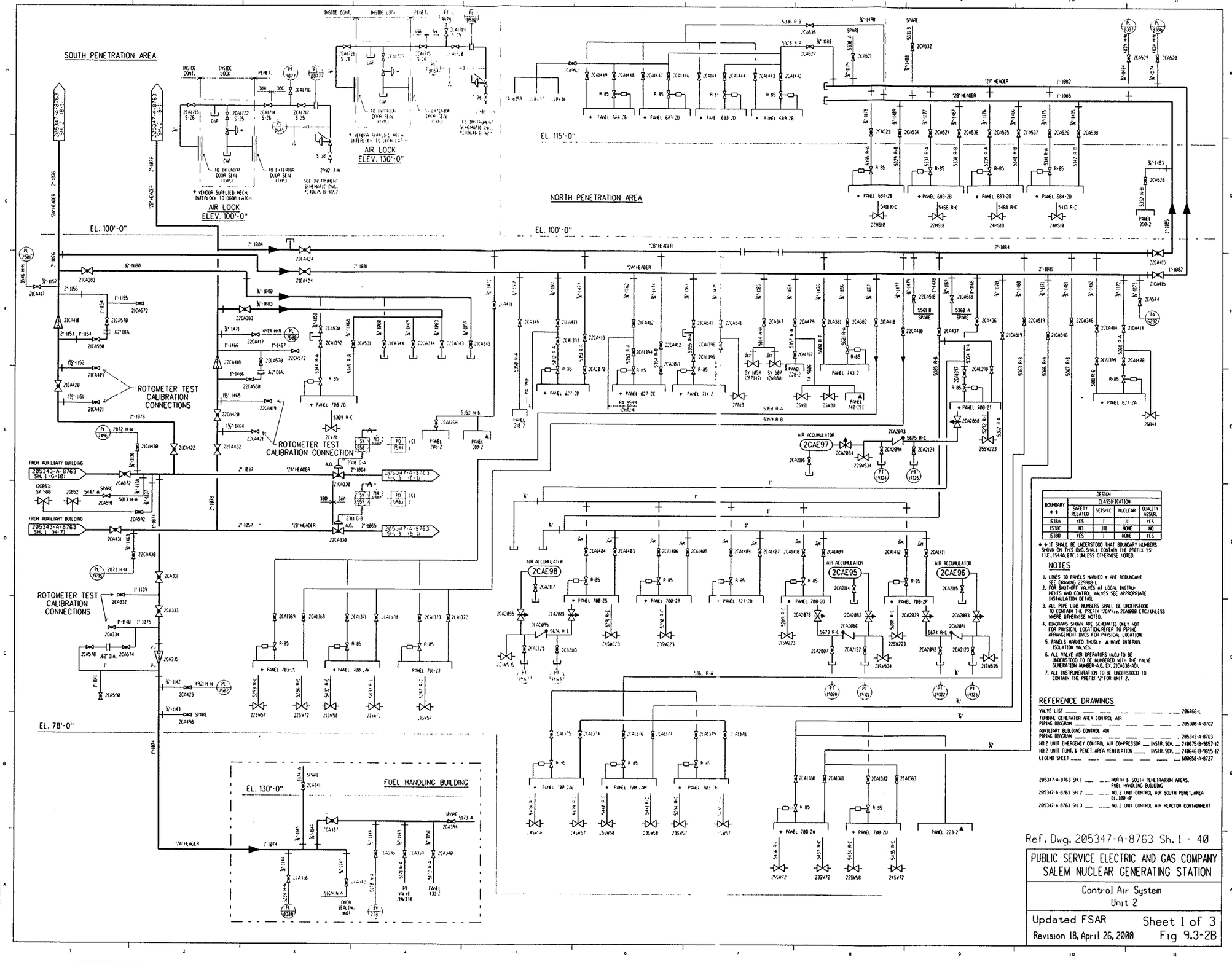

BOUNDARY * *	DESIGN CLASSIFICATION SAFETY RELATED	SEISMIC	NUCLEAR	QUALITY ASSUR.
1538A	YES	I	II	YES
1538C	NO	III	NONE	NO
1538D	YES	I	NONE	YES

* * IT SHALL BE UNDERSTOOD THAT BOUNDARY NUMBERS SHOWN ON THIS DWG. SHALL CONTAIN THE PREFIX "15" (I.E., 1544A, ETC.) UNLESS OTHERWISE NOTED.

NOTES

1. LINES TO PANELS MARKED * ARE REDUNDANT SEE DRAWING 229888-L
2. FOR SHUT-OFF VALVES AT LOCAL INSTRUMENTS AND CONTROL VALVES SEE APPROPRIATE INSTALLATION DETAIL
3. ALL PIPE LINE NUMBERS SHALL BE UNDERSTOOD TO CONTAIN THE PREFIX "2CA" (I.E., 2CA1000 ETC.) UNLESS WHERE OTHERWISE NOTED.
4. DIAGRAMS SHOWN ARE SCHEMATIC ONLY NOT FOR PHYSICAL LOCATION. REFER TO PIPING ARRANGEMENT DWGS FOR PHYSICAL LOCATION.
5. PANELS MARKED THUS: ▲ HAVE INTERNAL ISOLATION VALVES.
6. ALL VALVE AIR OPERATORS (AO) TO BE UNDERSTOOD TO BE NUMBERED WITH THE VALVE GENERATION NUMBER-A.O. (E.X. 2(CA)30-AO).
7. ALL INSTRUMENTATION TO BE UNDERSTOOD TO CONTAIN THE PREFIX "2" FOR UNIT 2.

REFERENCE DRAWINGS

VALVE LIST 206766-L
TURBINE GENERATOR AREA CONTROL AIR PIPING DIAGRAM 205308-A-8762
AUXILIARY BUILDING CONTROL AIR PIPING DIAGRAM 205343-A-8763
NO.2 UNIT EMERGENCY CONTROL AIR COMPRESSOR ..... INSTR. SCH. 240675-B-9657-12
NO.2 UNIT CONT. & PENET. AREA VENTILATION ..... INSTR. SCH. 240646-B-9655-12
LEGEND SHEET 600858-A-8727

205347-A-8763 SH.1 ..... NORTH & SOUTH PENETRATION AREAS, FUEL HANDLING BUILDING
205347-A-8763 SH.2 ..... NO.2 UNIT-CONTROL AIR SOUTH PENET. AREA EL.100'-0"
205347-A-8763 SH.3 ..... NO.2 UNIT-CONTROL AIR REACTOR CONTAINMENT

Ref. Dwg. 205347-A-8763 Sh. 1 - 40

PUBLIC SERVICE ELECTRIC AND GAS COMPANY
SALEM NUCLEAR GENERATING STATION

Control Air System
Unit 2

Updated FSAR
Revision 18, April 26, 2000

Sheet 1 of 3
Fig 9.3-2B

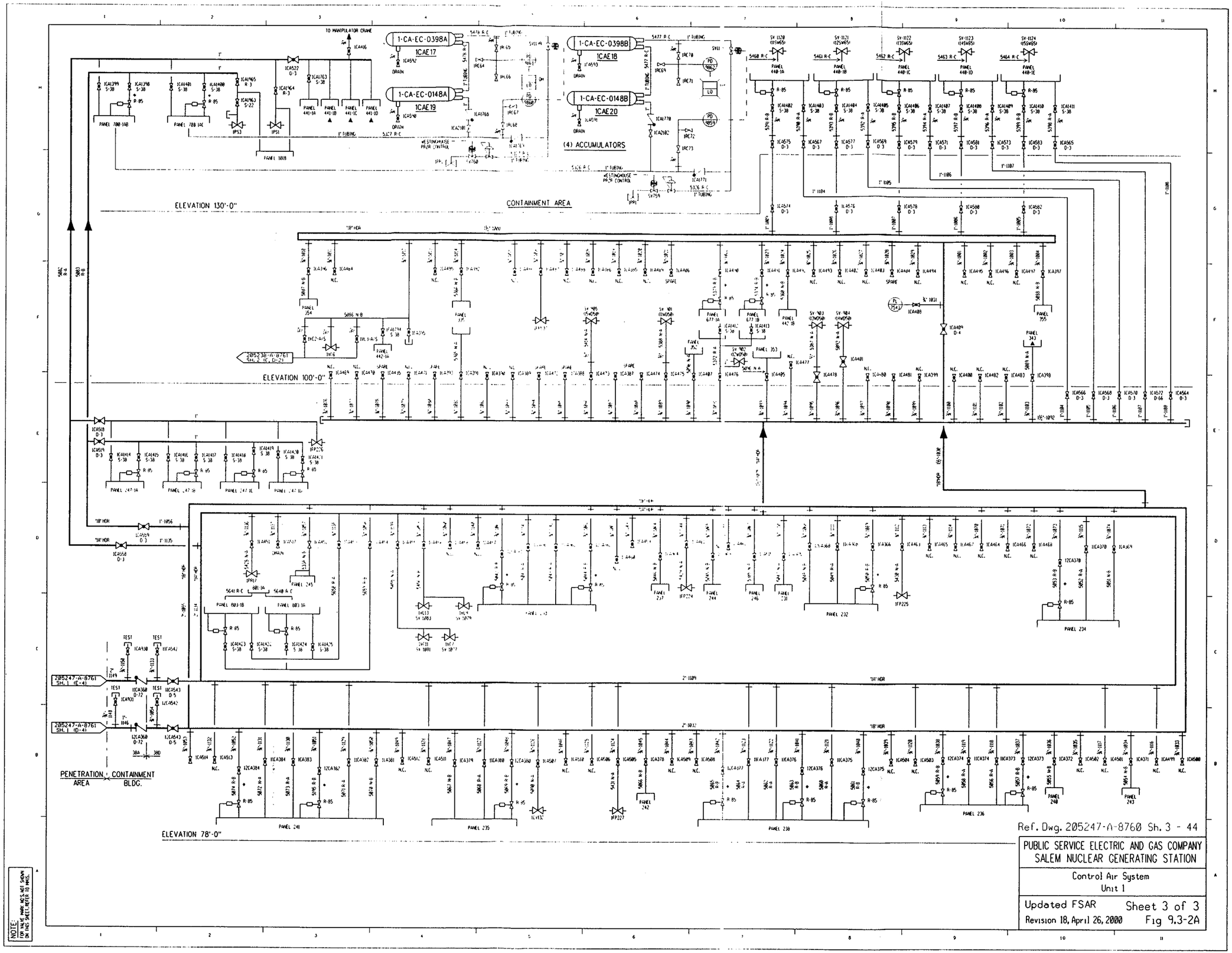

Ref. Dwg. 205247-A-8760 Sh. 3 - 44

PUBLIC SERVICE ELECTRIC AND GAS COMPANY
SALEM NUCLEAR GENERATING STATION

Control Air System
Unit 1

Updated FSAR Sheet 3 of 3
Revision 18, April 26, 2000 Fig 9.3-2A

NOTE: FOR VALVE MARK NOS. NOT SHOWN ON THIS SHEET, REFER TO MMS.

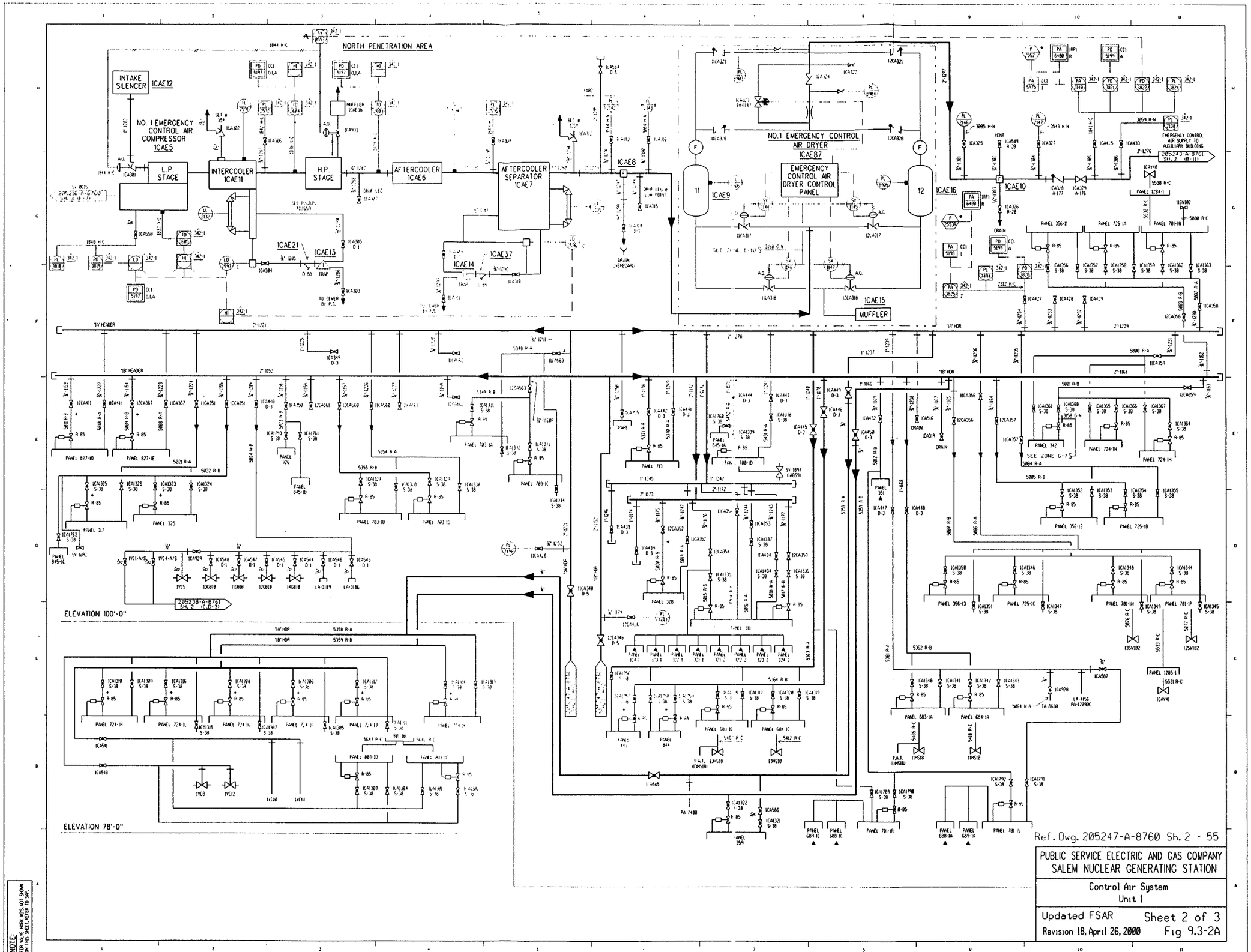
NORTH PENETRATION AREA
INTAKE SILENCER
1CAE12
NO. 1 EMERGENCY CONTROL AIR COMPRESSOR
1CAE5
L.P. STAGE
INTERCOOLER
1CAE11
H.P. STAGE
AFTERCOOLER
1CAE6
AFTERCOOLER SEPARATOR
1CAE7
1CAE8
1CAE21
1CAE13
1CAE14
1CAE37
NO.1 EMERGENCY CONTROL AIR DRYER
1CAE87
EMERGENCY CONTROL AIR DRYER CONTROL PANEL
1CAE9
1CAE16
1CAE10
1CAE15
MUFFLER
EMERGENCY CONTROL AIR SUPPLY TO AUXILIARY BUILDING
205238-A-8761 SH. 2 (C,D-3)
ELEVATION 100'-0"
ELEVATION 78'-0"
Ref. Dwg. 205247-A-8760 Sh. 2 - 55
PUBLIC SERVICE ELECTRIC AND GAS COMPANY
SALEM NUCLEAR GENERATING STATION
Control Air System
Unit 1
Updated FSAR
Sheet 2 of 3
Revision 18, April 26, 2000
Fig 9.3-2A
NOTE:
FOR VALVE MARK NOS. NOT SHOWN ON THIS SHEET, REFER TO SAP.

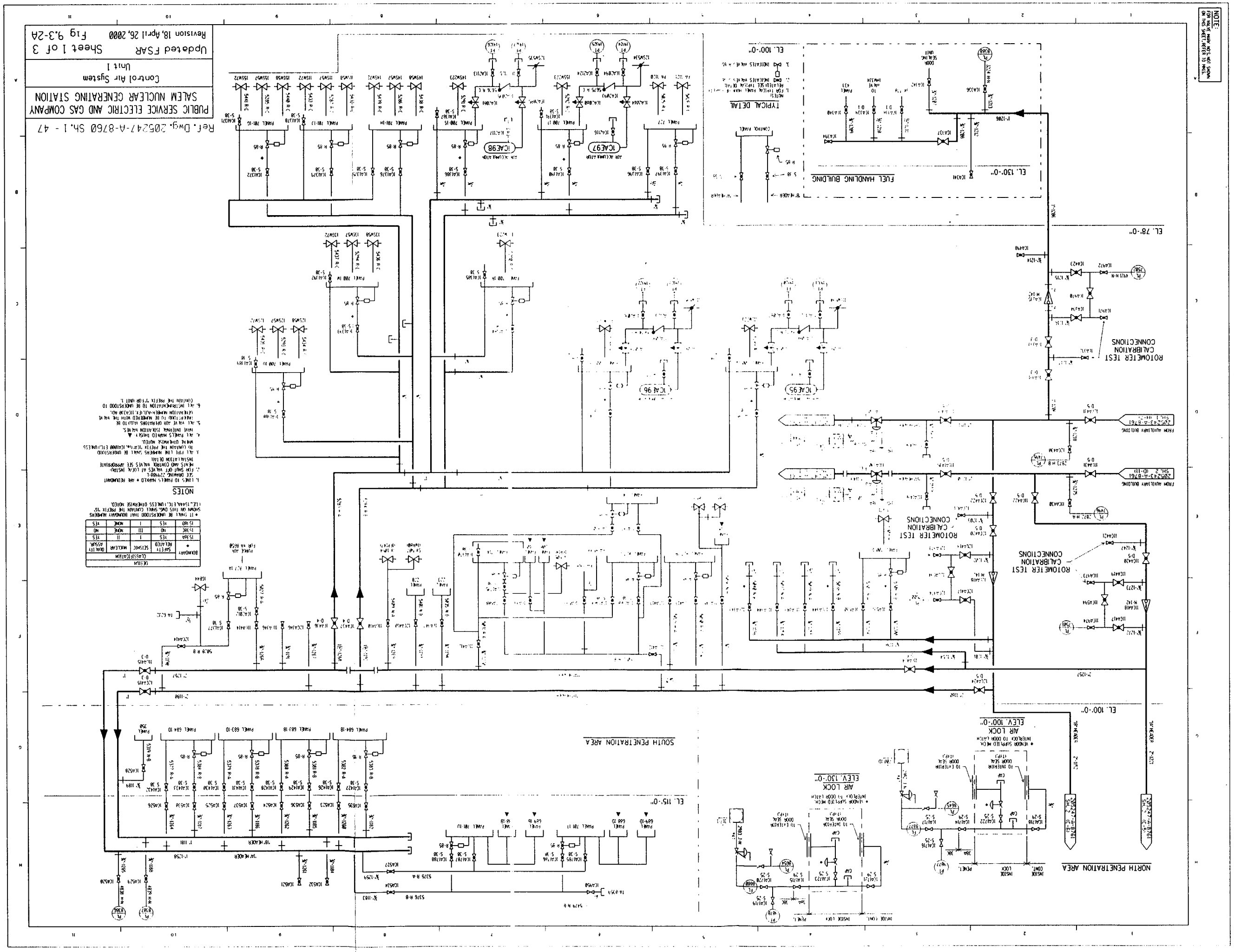

Ref. Dwg. 205247-A-8760 Sh. 1 - 47

PUBLIC SERVICE ELECTRIC AND GAS COMPANY
SALEM NUCLEAR GENERATING STATION

Control Air System
Unit 1

Updated FSAR Sheet 1 of 3
Revision 18, April 26, 2000 Fig 9.3-2A

BOUNDARY	SAFETY RELATED	CLASSIFICATION SEISMIC	NUCLEAR	QUALITY ASSUR.
15 BAR	YES	I	II	YES
15 BAR	NO	III	NONE	NO
15 BAR	YES	I	NONE	YES
15 BAR	NO	I	NONE	NO

* IT SHALL BE UNDERSTOOD THAT BOUNDARY NUMBERS SHOWN ON THIS DWG. SHALL CONTAIN THE PREFIX "1" (I.E., 15444, ETC.) UNLESS OTHERWISE NOTED.

NOTES

1. LINES TO PANELS MARKED * ARE REDUNDANT SEE DRAWING 229988-1.
2. FOR SHUT OFF VALVES AT LOCAL INSTRUMENTS AND CONTROL VALVES SEE APPROPRIATE INSTALLATION DETAIL.
3. ALL PIPE LINE NUMBERS SHALL BE UNDERSTOOD TO CONTAIN THE PREFIX "1CA-1", "1CA-2" ETC. UNLESS WHERE OTHERWISE NOTED.
4. ALL PANELS MARKED THUSLY ▲ MAKE INTERNAL ISOLATION VALVES.
5. ALL VALVE AIR OPERATORS HAD TO BE ENCLOSED TO BE NUMBERED WITH THE VALVE OPERATION NUMBER-AO.(E.I. 1CA-2) AND.
6. ALL INSTRUMENTATION TO BE UNDERSTOOD TO CONTAIN THE PREFIX "1" FOR UNIT 1.

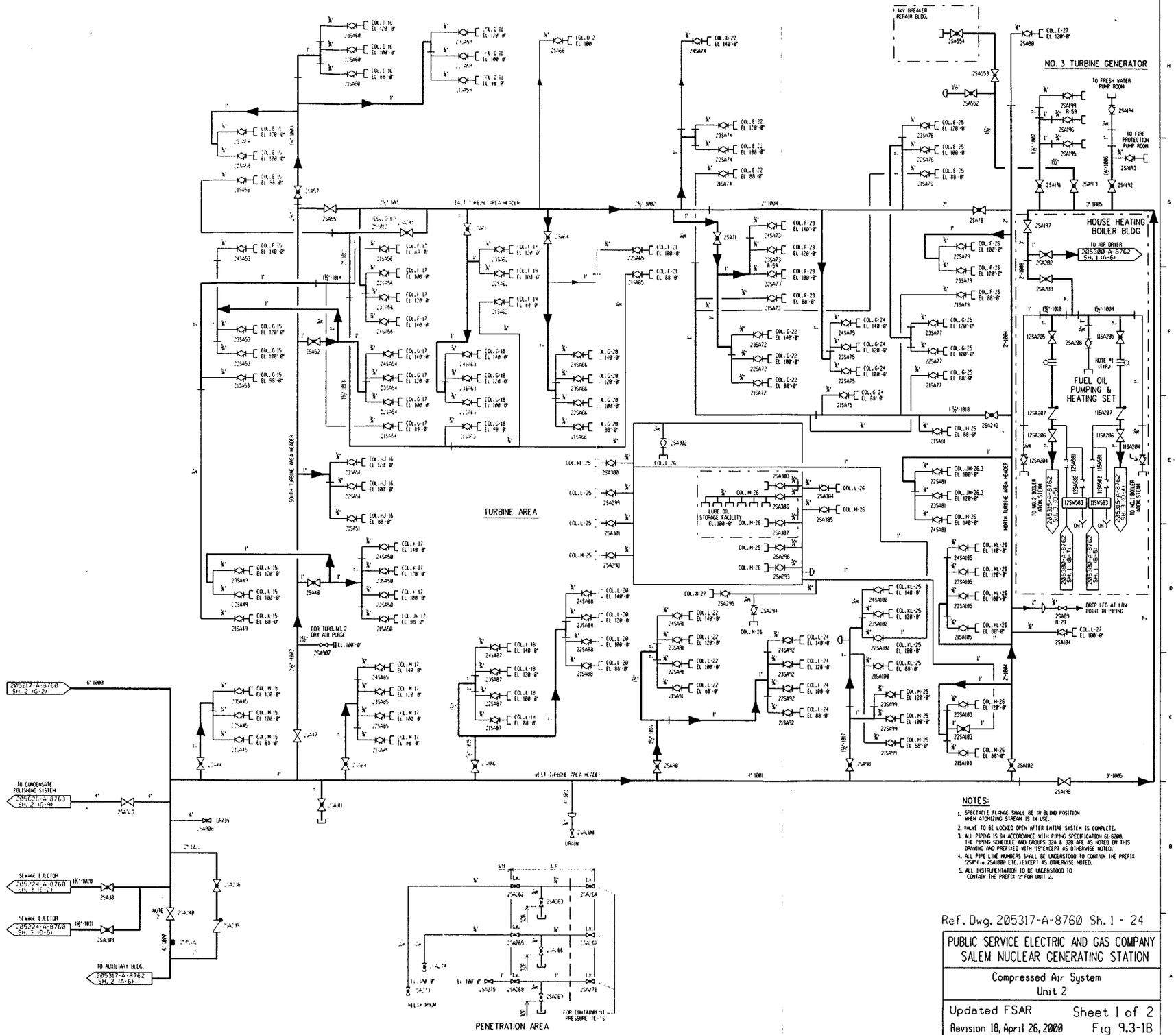

NOTES:

1. SPECTACLE FLANGE SHALL BE IN BLIND POSITION WHEN ATOMIZING STREAM IS IN USE.
2. VALVE TO BE LOCKED OPEN AFTER ENTIRE SYSTEM IS COMPLETE.
3. ALL PIPING IS IN ACCORDANCE WITH PIPING SPECIFICATION G1-6200. THE PIPING SCHEDULE AND GROUPS 32A & 32B ARE AS NOTED ON THIS DRAWING AND PREFIXED WITH "1" EXCEPT AS OTHERWISE NOTED.
4. ALL PIPE LINE NUMBERS SHALL BE UNDERSTOOD TO CONTAIN THE PREFIX "25A" i.e. 25A000 ETC. EXCEPT AS OTHERWISE NOTED.
5. ALL INSTRUMENTATION TO BE UNDERSTOOD TO CONTAIN THE PREFIX "2" FOR UNIT 2.

Ref. Dwg. 205317-A-8760 Sh. 1 - 24

PUBLIC SERVICE ELECTRIC AND GAS COMPANY
SALEM NUCLEAR GENERATING STATION

Compressed Air System
Unit 2

Updated FSAR
Revision 18, April 26, 2000

Sheet 1 of 2
Fig 9.3-1B

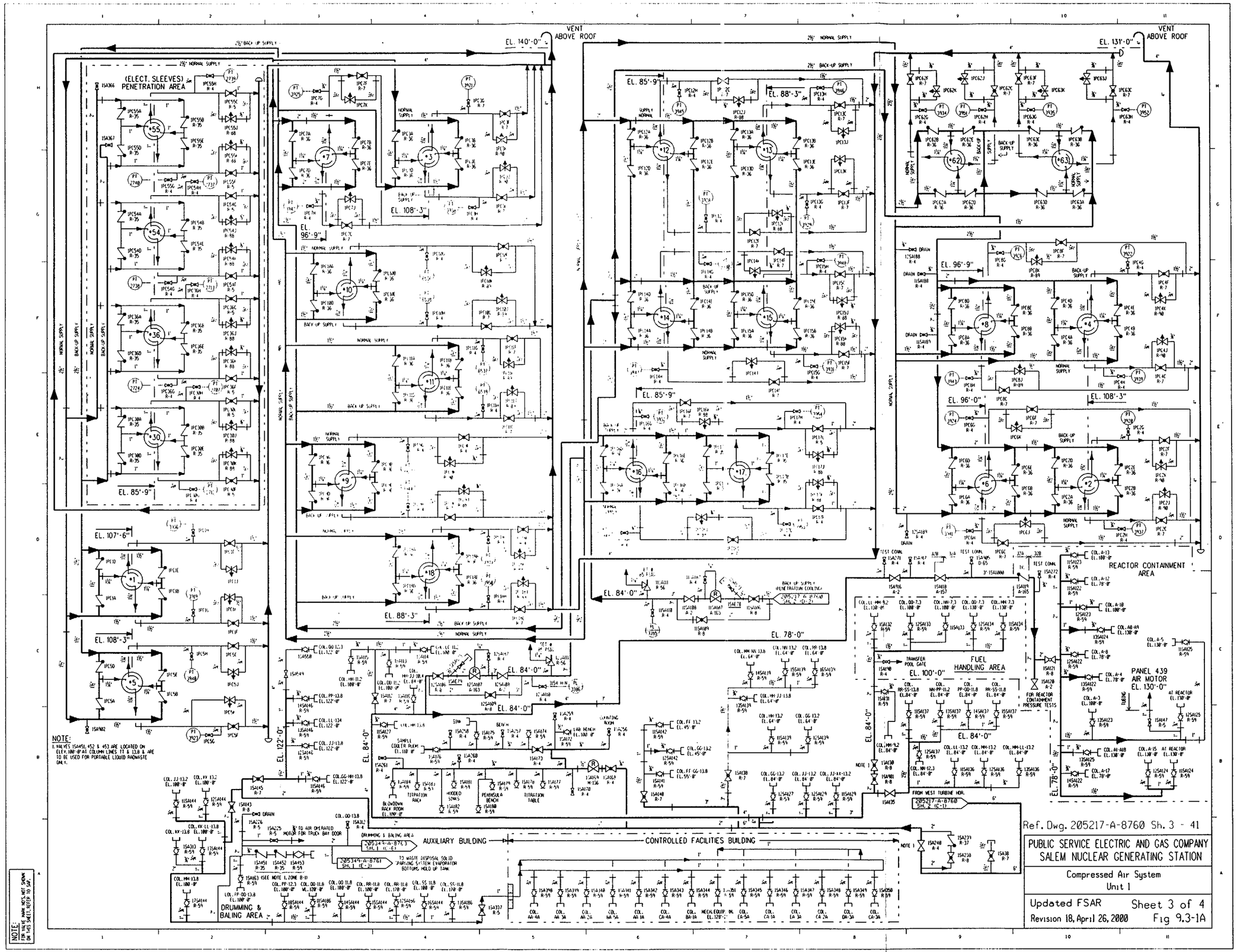

Ref. Dwg. 205217-A-8760 Sh. 3 - 41

PUBLIC SERVICE ELECTRIC AND GAS COMPANY
SALEM NUCLEAR GENERATING STATION

Compressed Air System
Unit 1

Updated FSAR
Revision 18, April 26, 2000

Sheet 3 of 4
Fig 9.3-1A

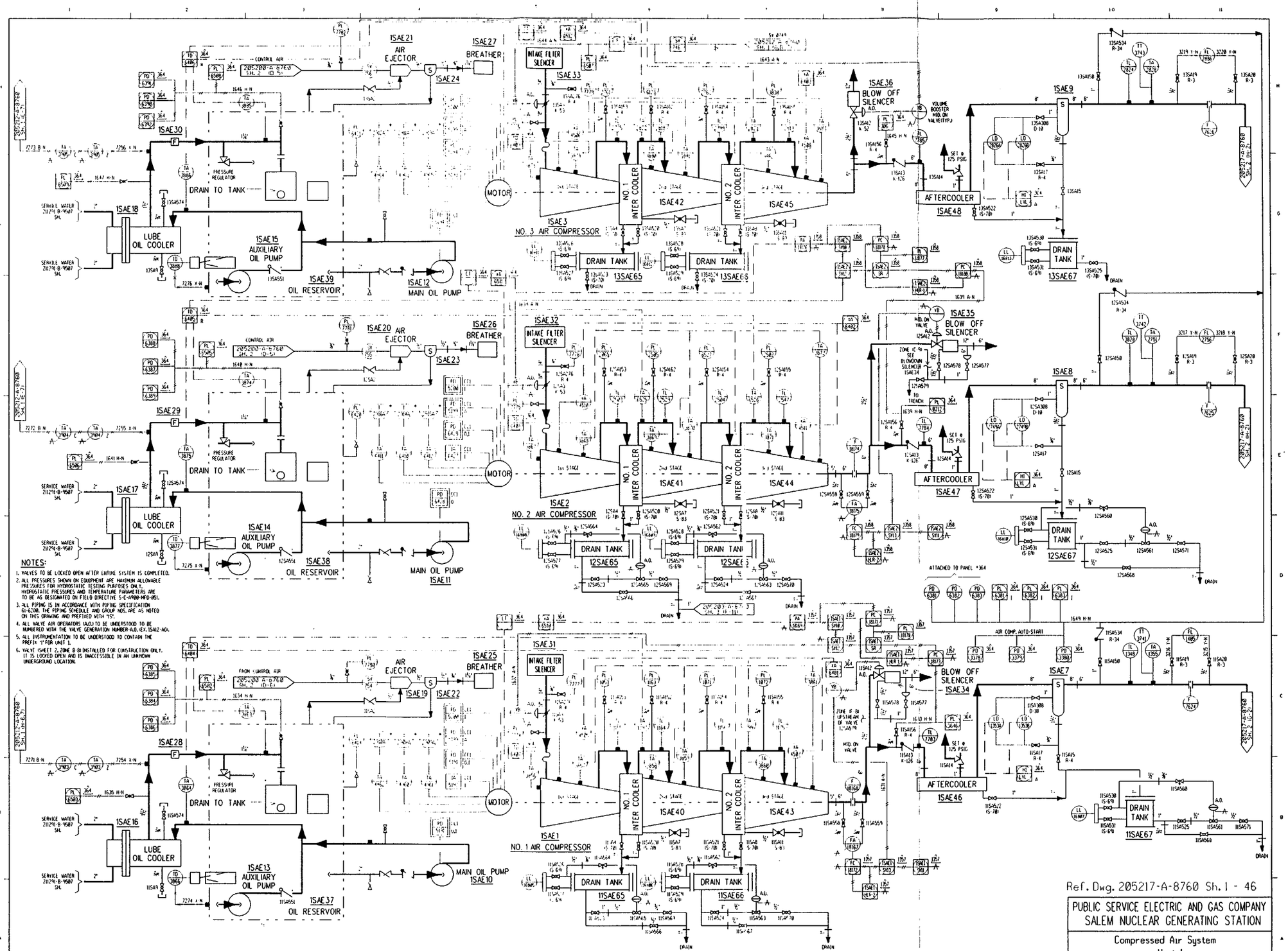
1SAE21
AIR EJECTOR
1SAE27
BREATHER
1SAE24
1SAE30
PRESSURE REGULATOR
DRAIN TO TANK
1SAE18
LUBE OIL COOLER
1SAE15
AUXILIARY OIL PUMP
1SAE39
OIL RESERVOIR
1SAE12
MAIN OIL PUMP
1SAE33
INTAKE FILTER SILENCER
MOTOR
NO. 1 INTER COOLER
NO. 2 INTER COOLER
1SAE42
1SAE45
1SAE3
NO. 3 AIR COMPRESSOR
DRAIN TANK
13SAE65
13SAE66
1SAE36
BLOW OFF SILENCER
AFTERCOOLER
1SAE48
1SAE9
13SAE67
1SAE20
AIR EJECTOR
1SAE26
BREATHER
1SAE23
1SAE29
1SAE17
1SAE14
AUXILIARY OIL PUMP
1SAE38
OIL RESERVOIR
MAIN OIL PUMP
1SAE11
1SAE32
INTAKE FILTER SILENCER
1SAE41
1SAE44
1SAE2
NO. 2 AIR COMPRESSOR
12SAE65
12SAE66
1SAE35
BLOW OFF SILENCER
1SAE8
1SAE47
12SAE67
ATTACHED TO PANEL *364
1SAE31
INTAKE FILTER SILENCER
1SAE25
BREATHER
1SAE19
1SAE22
1SAE28
1SAE16
1SAE13
AUXILIARY OIL PUMP
1SAE37
OIL RESERVOIR
MAIN OIL PUMP
1SAE10
1SAE40
1SAE43
1SAE1
NO. 1 AIR COMPRESSOR
11SAE65
11SAE66
BLOW OFF SILENCER
1SAE34
1SAE7
AFTERCOOLER
1SAE46
11SAE67
DRAIN
NOTES:
1. VALVES TO BE LOCKED OPEN AFTER INITIAL SYSTEM IS COMPLETED.
2. ALL PRESSURES SHOWN ON EQUIPMENT ARE MAXIMUM ALLOWABLE PRESSURES FOR HYDROSTATIC TESTING PURPOSES ONLY. HYDROSTATIC PRESSURES AND TEMPERATURE PARAMETERS ARE TO BE AS DESIGNATED ON FIELD DIRECTIVE S-C-4908-MED-051.
3. ALL PIPING IS IN ACCORDANCE WITH PIPING SPECIFICATION G1-6200. THE PIPING SCHEDULE AND GROUP NOS. ARE AS NOTED ON THIS DRAWING AND PREFIXED WITH "1S".
4. ALL VALVE AIR OPERATORS (AO) TO BE UNDERSTOOD TO BE NUMBERED WITH THE VALVE GENERATION NUMBER-A.O. (E.X. 1SA12-AO).
5. ALL INSTRUMENTATION TO BE UNDERSTOOD TO CONTAIN THE PREFIX "1" FOR UNIT 1.
6. VALVE 1SAE1 2, ZONE B-B1 INSTALLED FOR CONSTRUCTION ONLY. IT IS LOCKED OPEN AND IS INACCESSIBLE IN AN UNKNOWN UNDERGROUND LOCATION.
NOTE: FOR VALVE AREA NOS. NOT SHOWN SEE NOS. 5AE1-5AE3 TO 1-9AE3.
Ref. Dwg. 205217-A-8760 Sh. 1 - 46
PUBLIC SERVICE ELECTRIC AND GAS COMPANY
SALEM NUCLEAR GENERATING STATION
Compressed Air System
Unit 1
Updated FSAR
Sheet 1 of 4
Revision 18, April 26, 2000
Fig 9.3-1A

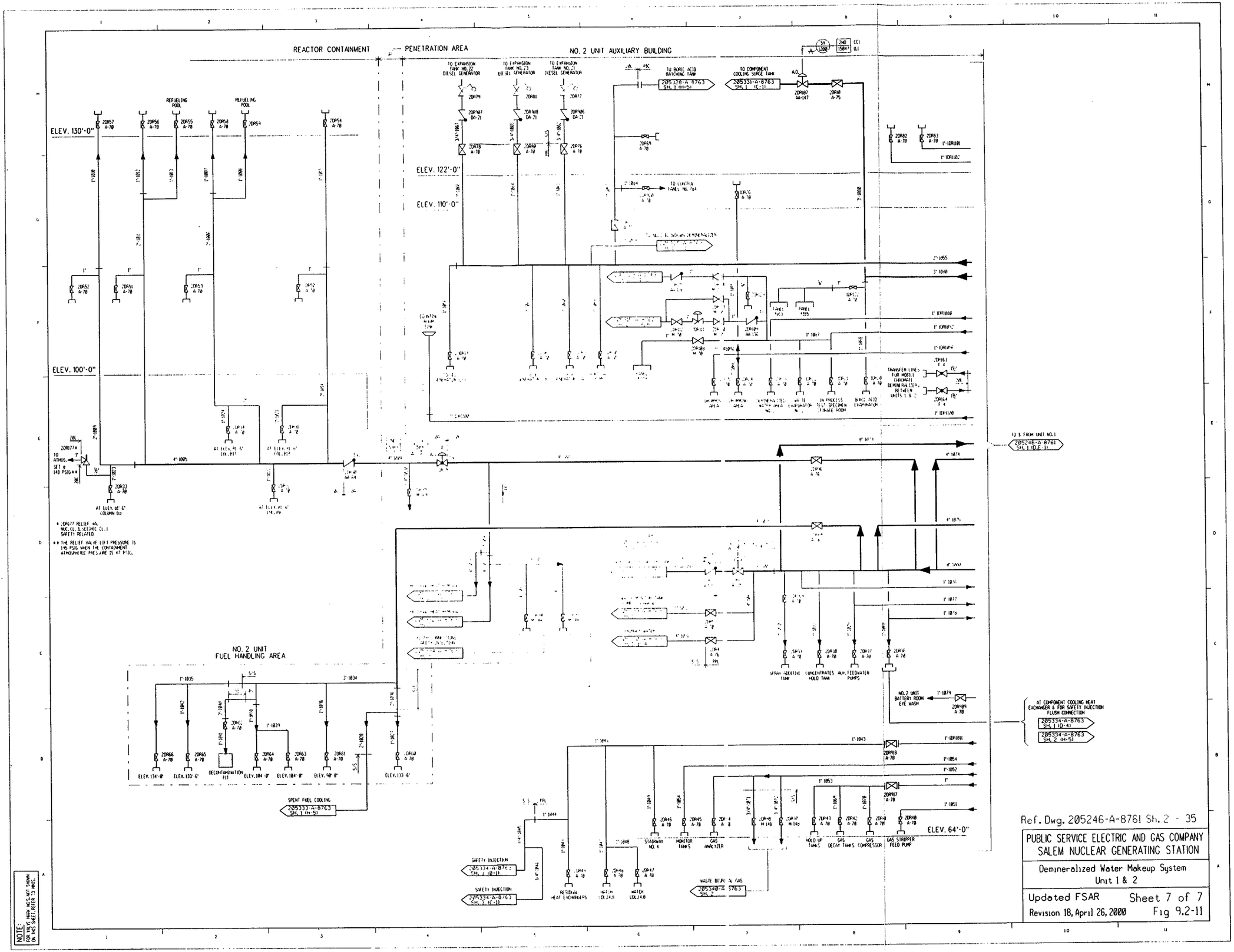

Ref. Dwg. 205246-A-8761 Sh. 2 - 35

PUBLIC SERVICE ELECTRIC AND GAS COMPANY
SALEM NUCLEAR GENERATING STATION

Demineralized Water Makeup System
Unit 1 & 2

Updated FSAR Sheet 7 of 7
Revision 18, April 26, 2000 Fig 9.2-11

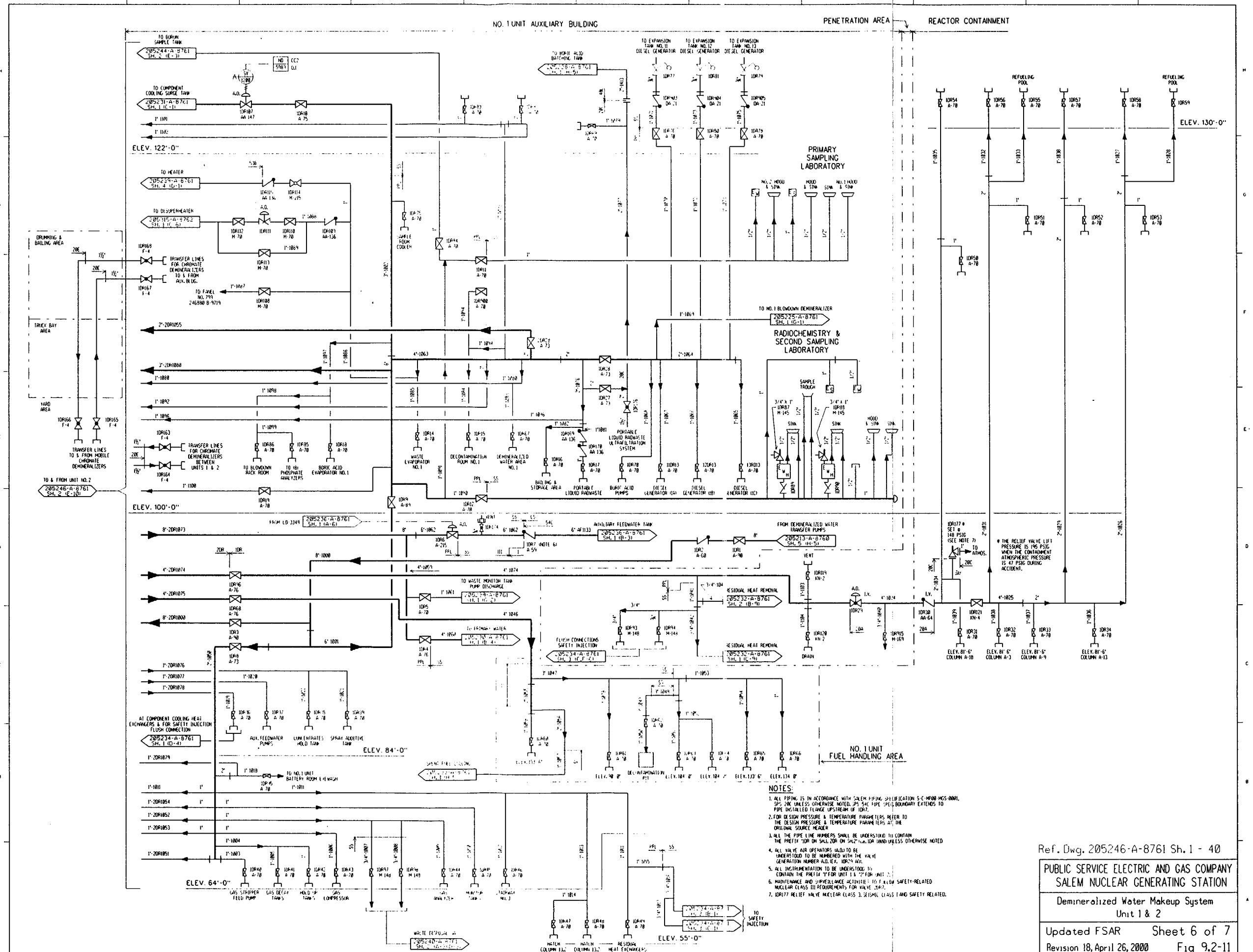
NO. 1 UNIT AUXILIARY BUILDING
PENETRATION AREA
REACTOR CONTAINMENT
ELEV. 122'-0"
ELEV. 100'-0"
ELEV. 84'-0"
ELEV. 64'-0"
ELEV. 55'-0"
ELEV. 130'-0"
PRIMARY SAMPLING LABORATORY
RADIOCHEMISTRY & SECOND SAMPLING LABORATORY
NO. 1 UNIT FUEL HANDLING AREA
REFUELING POOL
DRUMMING & BAILING AREA
TRUCK BAY AREA
YARD AREA
TRANSFER LINES FOR CHROMATE DEMINERALIZERS TO & FROM AUX. BLDG.
TRANSFER LINES TO & FROM MOBILE CHROMATE DEMINERALIZERS
TO & FROM UNIT NO.2
TO COMPONENT COOLING SURGE TANK
TO HEATER
TO DESUPERHEATER
TO BORON SAMPLE TANK
TO BORON ACID BATCHING TANK
TO EXPANSION TANK NO.11 DIESEL GENERATOR
TO EXPANSION TANK NO.12 DIESEL GENERATOR
TO EXPANSION TANK NO.13 DIESEL GENERATOR
TO NO.1 BLOWDOWN DEMINERALIZER
WASTE EVAPORATOR NO.1
DECONTAMINATION ROOM NO.1
DEMINERALIZED WATER AREA NO.1
PORTABLE LIQUID RADWASTE ULTRAFILTRATION SYSTEM
BAILING & STORAGE AREA
PORTABLE LIQUID RADWASTE
BORIC ACID PUMPS
DIESEL GENERATOR (GA)
DIESEL GENERATOR (GB)
DIESEL GENERATOR (GC)
TO BLOWDOWN RACK ROOM
TO #61 PHOSPHATE CONTAINERS
BORIC ACID EVAPORATOR NO.1
AUXILIARY FEEDWATER TANK
FROM DEMINERALIZED WATER TRANSFER PUMPS
TO WASTE MONITOR TANK PUMP DISCHARGE
RESIDUAL HEAT REMOVAL
FLUSH CONNECTIONS SAFETY INJECTION
AT COMPONENT COOLING HEAT EXCHANGERS & FOR SAFETY INJECTION FLUSH CONNECTION
AUX. FEEDWATER PUMPS
LUNI ENTRATES HOLD TANK
SPRAY ADDITIVE TANK
TO NO.1 UNIT BATTERY ROOM EYEWASH
GAS STRIPPER FEED PUMP
GAS DECAY TANKS
HOLD UP TANKS
GAS COMPRESSOR
WASTE EVAPORATOR
TO SAFETY INJECTION
HATCH COLUMN B-2
HATCH COLUMN D-2
RESIDUAL HEAT EXCHANGERS
DEC. INTERMEDIATE
ELEV. 90'-0"
ELEV. 104'-0"
ELEV. 133'-6"
ELEV. 124'-0"
ELEV. 81'-6" COLUMN A-18
ELEV. 81'-6" COLUMN A-3
ELEV. 81'-6" COLUMN A-9
ELEV. 81'-6" COLUMN A-13
* THE RELIEF VALVE LIFT PRESSURE IS 96 PSIG WHEN THE CONTAINMENT ATMOSPHERIC PRESSURE IS 47 PSIG DURING ACCIDENT.
NOTES:
1. ALL PIPING IS IN ACCORDANCE WITH SALEM PIPING SPECIFICATION S-C-HP00 MOS-0001, SPS 20K UNLESS OTHERWISE NOTED. SPS 54C PIPE SPEC. BOUNDARY EXTENDS TO PIPE INSTALLED FLANGE UPSTREAM OF 1DR7.
2. FOR DESIGN PRESSURE & TEMPERATURE PARAMETERS REFER TO THE DESIGN PRESSURE & TEMPERATURE PARAMETERS AT THE ORIGINAL SOURCE HEADER
3. ALL THE PIPE LINE NUMBERS SHALL BE UNDERSTOOD TO CONTAIN THE PREFIX "1DR OR SH1 2DR OR SH2" (e.g. 1DR1 UNLESS OTHERWISE NOTED
4. ALL VALVE AIR OPERATORS (AO) TO BE UNDERSTOOD TO BE NUMBERED WITH THE VALVE GENERATION NUMBER A.O. (E.G. 1DR24 AO).
5. ALL INSTRUMENTATION TO BE UNDERSTOOD TO CONTAIN THE PREFIX "1" FOR UNIT 1 & "2" FOR UNIT 2.
6. MAINTENANCE AND SURVEILLANCE ACTIVITIES TO FOLLOW SAFETY-RELATED NUCLEAR CLASS III REQUIREMENTS FOR VALVE 1DR7.
7. 1DR177 RELIEF VALVE NUCLEAR CLASS 3, SEISMIC CLASS I AND SAFETY RELATED.
NOTE: DWG NOS. SHOWN ARE NOT SHOWN ON THIS SHEET. REFER TO PHSS.
Ref. Dwg. 205246-A-8761 Sh. 1 - 40
PUBLIC SERVICE ELECTRIC AND GAS COMPANY
SALEM NUCLEAR GENERATING STATION
Demineralized Water Makeup System
Unit 1 & 2
Updated FSAR
Sheet 6 of 7
Revision 18, April 26, 2000
Fig 9.2-11

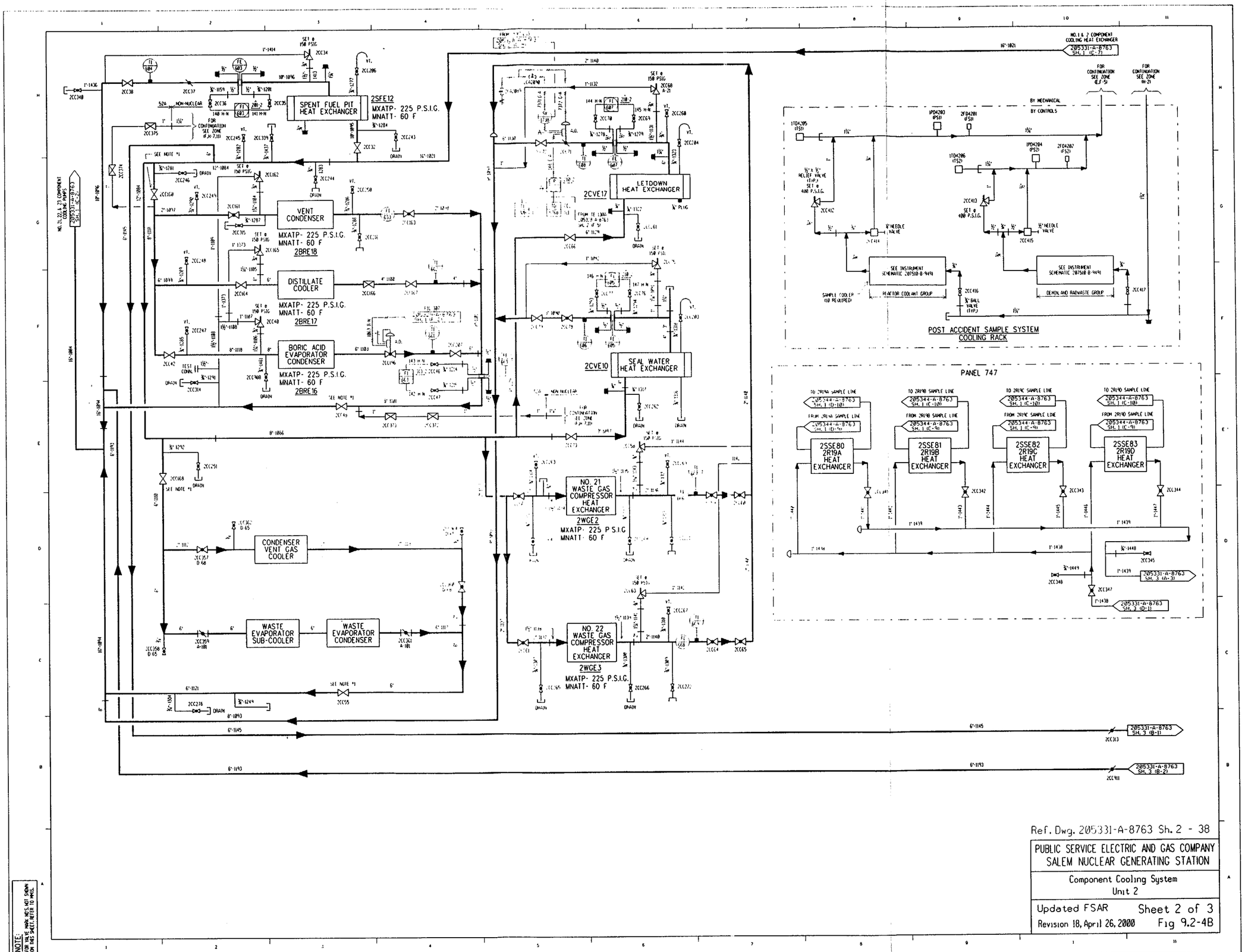

Ref. Dwg. 205331-A-8763 Sh. 2 - 38

PUBLIC SERVICE ELECTRIC AND GAS COMPANY
SALEM NUCLEAR GENERATING STATION

Component Cooling System
Unit 2

Updated FSAR Sheet 2 of 3
Revision 18, April 26, 2000 Fig 9.2-4B

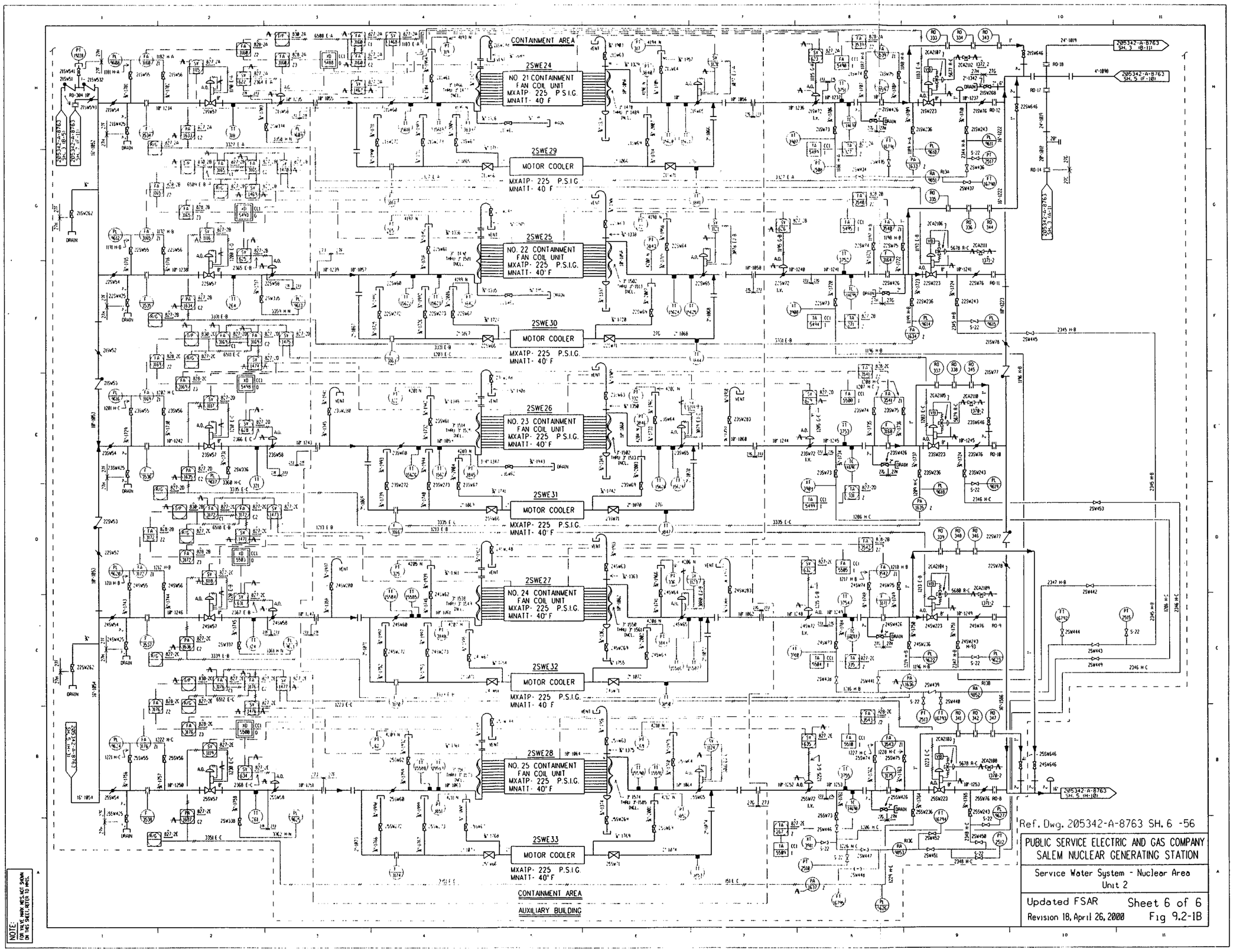

Ref. Dwg. 205342-A-8763 SH. 6 -56

PUBLIC SERVICE ELECTRIC AND GAS COMPANY
SALEM NUCLEAR GENERATING STATION

Service Water System - Nuclear Area
Unit 2

Updated FSAR Sheet 6 of 6
Revision 18, April 26, 2000 Fig 9.2-1B

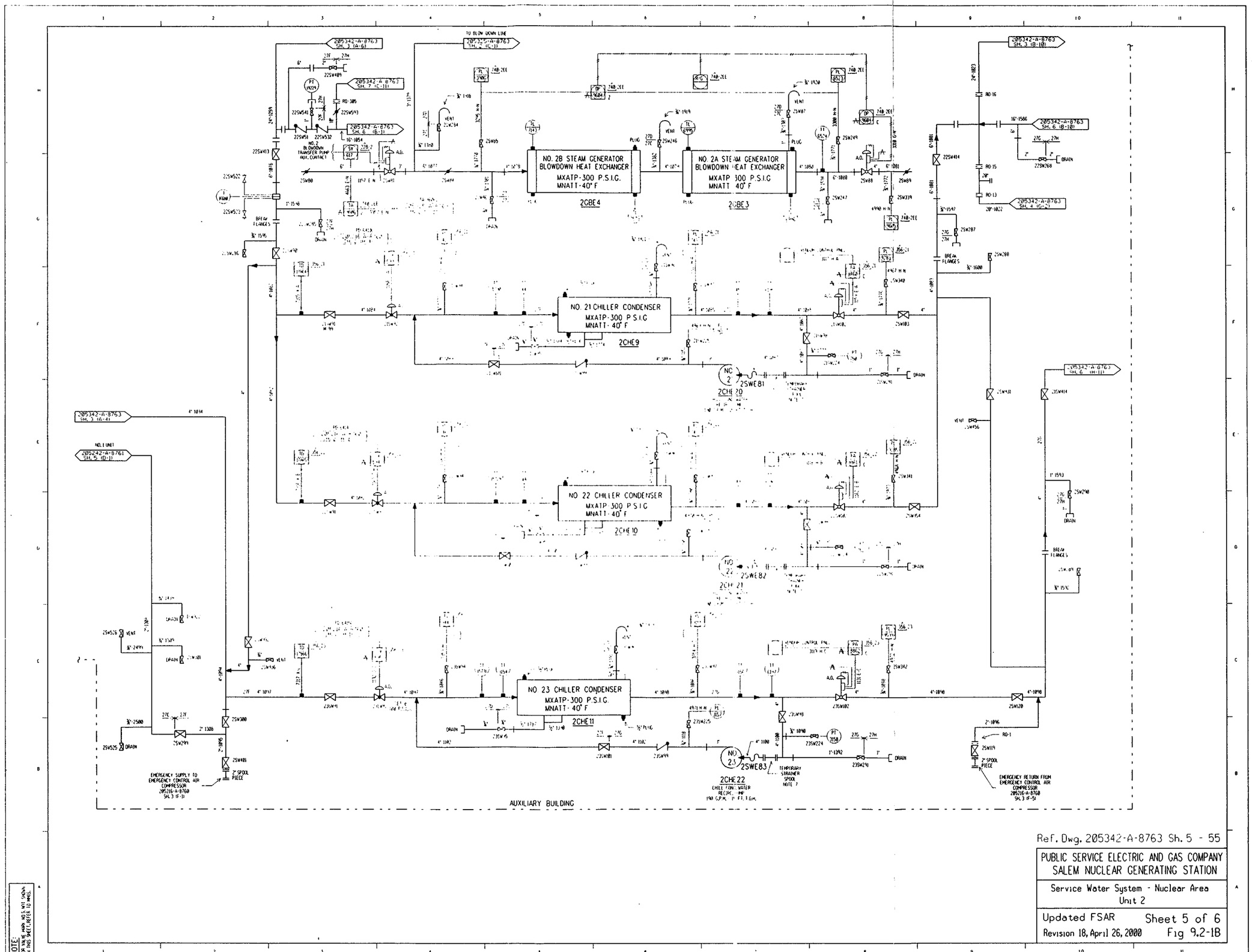

Ref. Dwg. 205342-A-8763 Sh. 5 - 55

PUBLIC SERVICE ELECTRIC AND GAS COMPANY
SALEM NUCLEAR GENERATING STATION

Service Water System - Nuclear Area
Unit 2

Updated FSAR Sheet 5 of 6
Revision 18, April 26, 2000 Fig 9.2-1B

NOTE: FOR VALVE MARK NO.S NOT SHOWN ON THIS SHEET, REFER TO MMS.

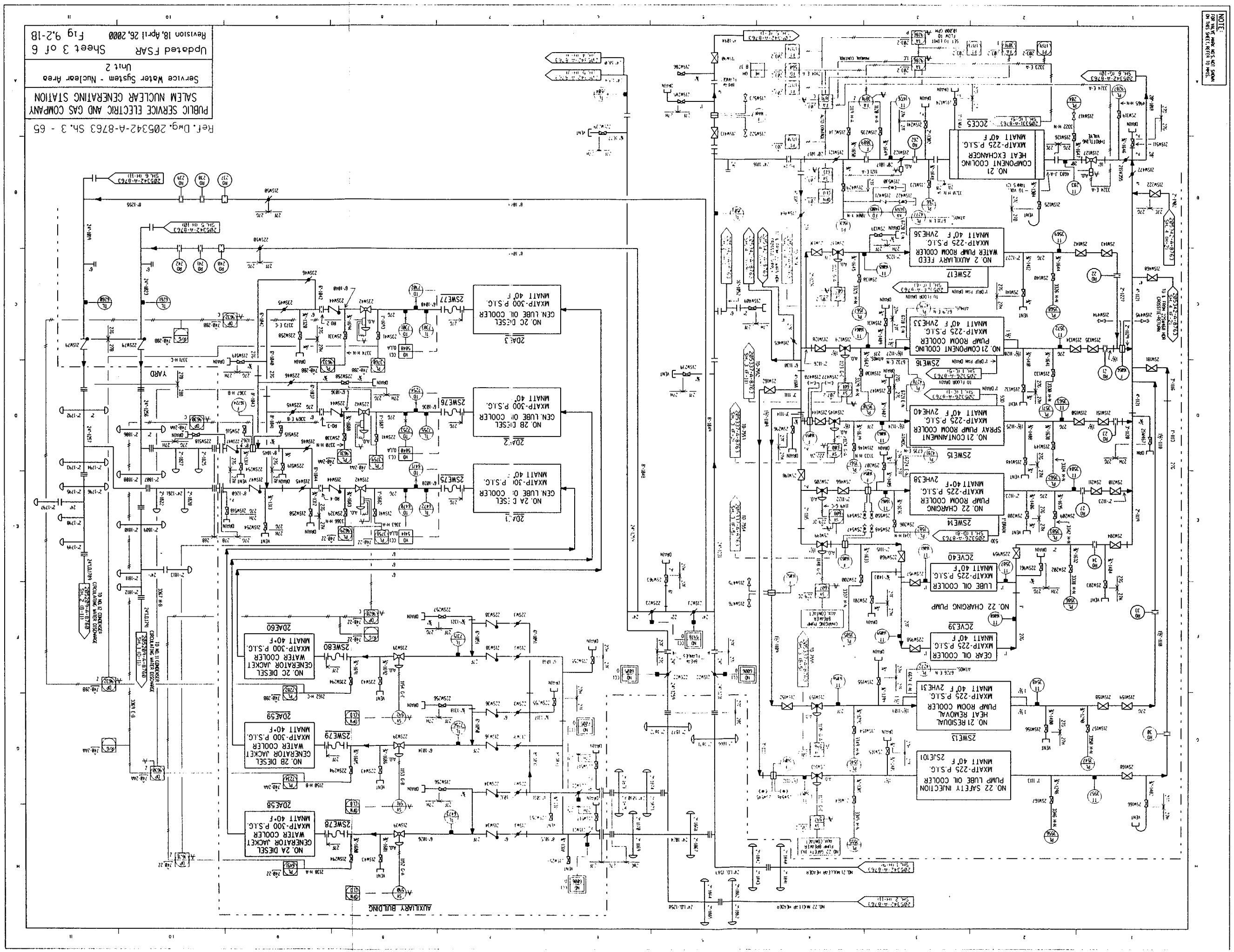
NOTE:
SEE SHEET 1 FOR LEGEND
ON THE SHEETS 1 OF 6
NO. 21 COMPONENT COOLING HEAT EXCHANGER
MXAIP-225 P.S.I.G.
MNAIT 40°F
NO. 2 AUXILIARY FEED WATER PUMP ROOM COOLER
MXAIP-225 P.S.I.G.
MNAIT 40°F 2VHE36
NO. 21 COMPONENT COOLING PUMP ROOM COOLER
MXAIP-225 P.S.I.G.
MNAIT 40°F 2VHE33
NO. 21 CONTAINMENT SPRAY PUMP ROOM COOLER
MXAIP-225 P.S.I.G.
MNAIT 40°F 2VHE40
NO. 22 CHARGING PUMP ROOM COOLER
MXAIP-225 P.S.I.G.
MNAIT 40°F 2VHE38
NO. 22 CHARGING PUMP
LUBE OIL COOLER
MXAIP-225 P.S.I.G.
MNAIT 40°F
2CVE40
NO. 22 CHARGING PUMP
GEAR OIL COOLER
MXAIP-225 P.S.I.G.
MNAIT 40°F
2CVE39
NO. 21 RESIDUAL HEAT REMOVAL PUMP ROOM COOLER
MXAIP-225 P.S.I.G.
MNAIT 40°F 2VHE31
NO. 22 SAFETY INJECTION PUMP LUBE OIL COOLER
MXAIP-225 P.S.I.G.
MNAIT 40°F 2SJE101
NO. 2C DIESEL GEN. LUBE OIL COOLER
MXAIP-300 P.S.I.G.
MNAIT 40°F
2DAE-3
NO. 2B DIESEL GEN. LUBE OIL COOLER
MXAIP-300 P.S.I.G.
MNAIT 40°F
2DAE-2
NO. 2A DIESEL GEN. LUBE OIL COOLER
MXAIP-300 P.S.I.G.
MNAIT 40°F
2DAE-1
NO. 2C DIESEL GENERATOR JACKET WATER COOLER
MXAIP-300 P.S.I.G.
MNAIT 40°F
2DAE60
NO. 2B DIESEL GENERATOR JACKET WATER COOLER
MXAIP-300 P.S.I.G.
MNAIT 40°F
2DAE59
NO. 2A DIESEL GENERATOR JACKET WATER COOLER
MXAIP-300 P.S.I.G.
MNAIT 40°F
2DAE58
AUXILIARY BUILDING
YARD
Ref. Dwg. 205342-A-8763 Sh. 3 - 65
PUBLIC SERVICE ELECTRIC AND GAS COMPANY
SALEM NUCLEAR GENERATING STATION
Service Water System - Nuclear Area
Unit 2
Updated FSAR Sheet 3 of 6
Revision 18, April 26, 2000 Fig 9.2-18

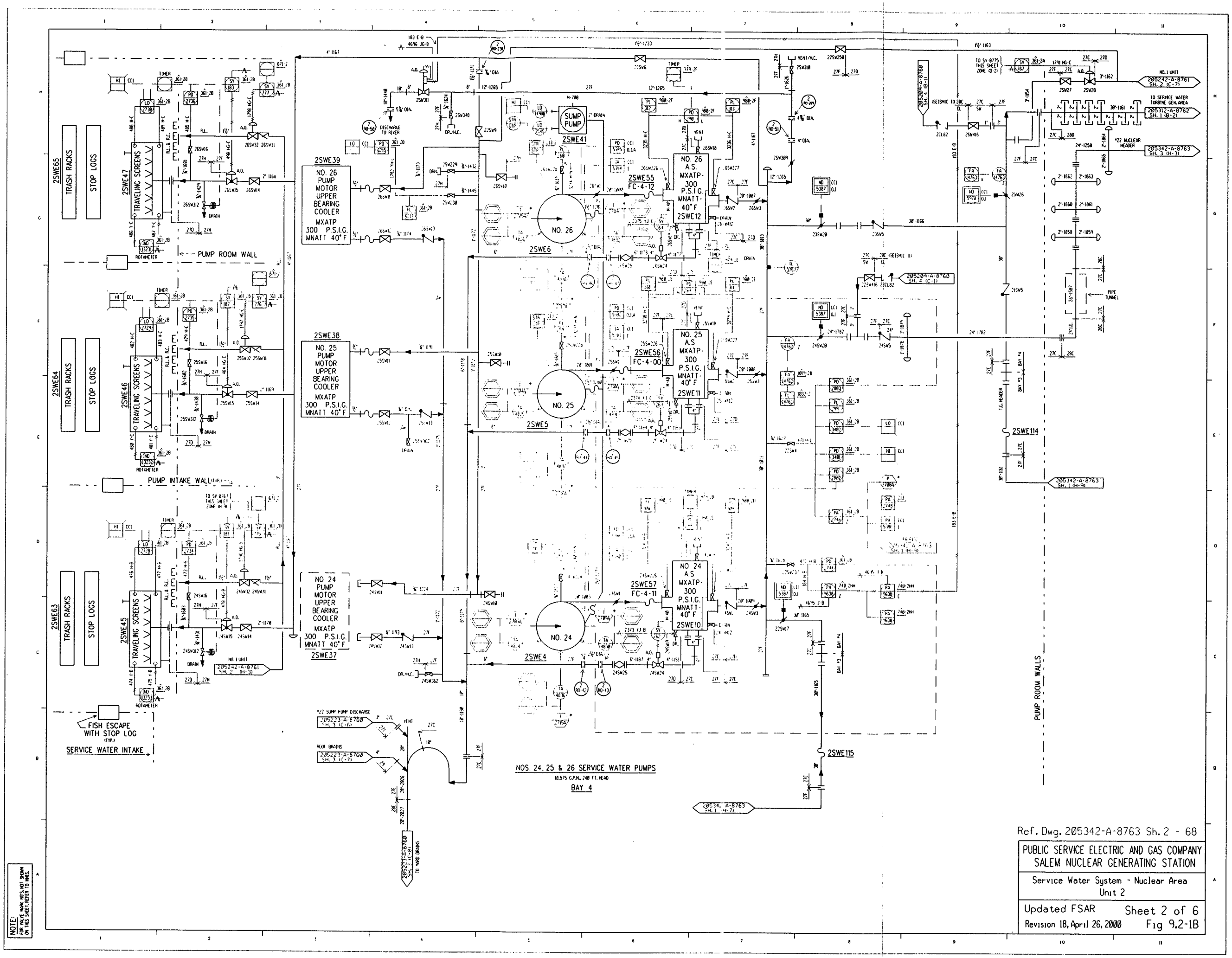

Ref. Dwg. 205342-A-8763 Sh. 2 - 68

PUBLIC SERVICE ELECTRIC AND GAS COMPANY SALEM NUCLEAR GENERATING STATION
Service Water System - Nuclear Area Unit 2
Updated FSAR Sheet 2 of 6 Revision 18, April 26, 2000 Fig 9.2-1B

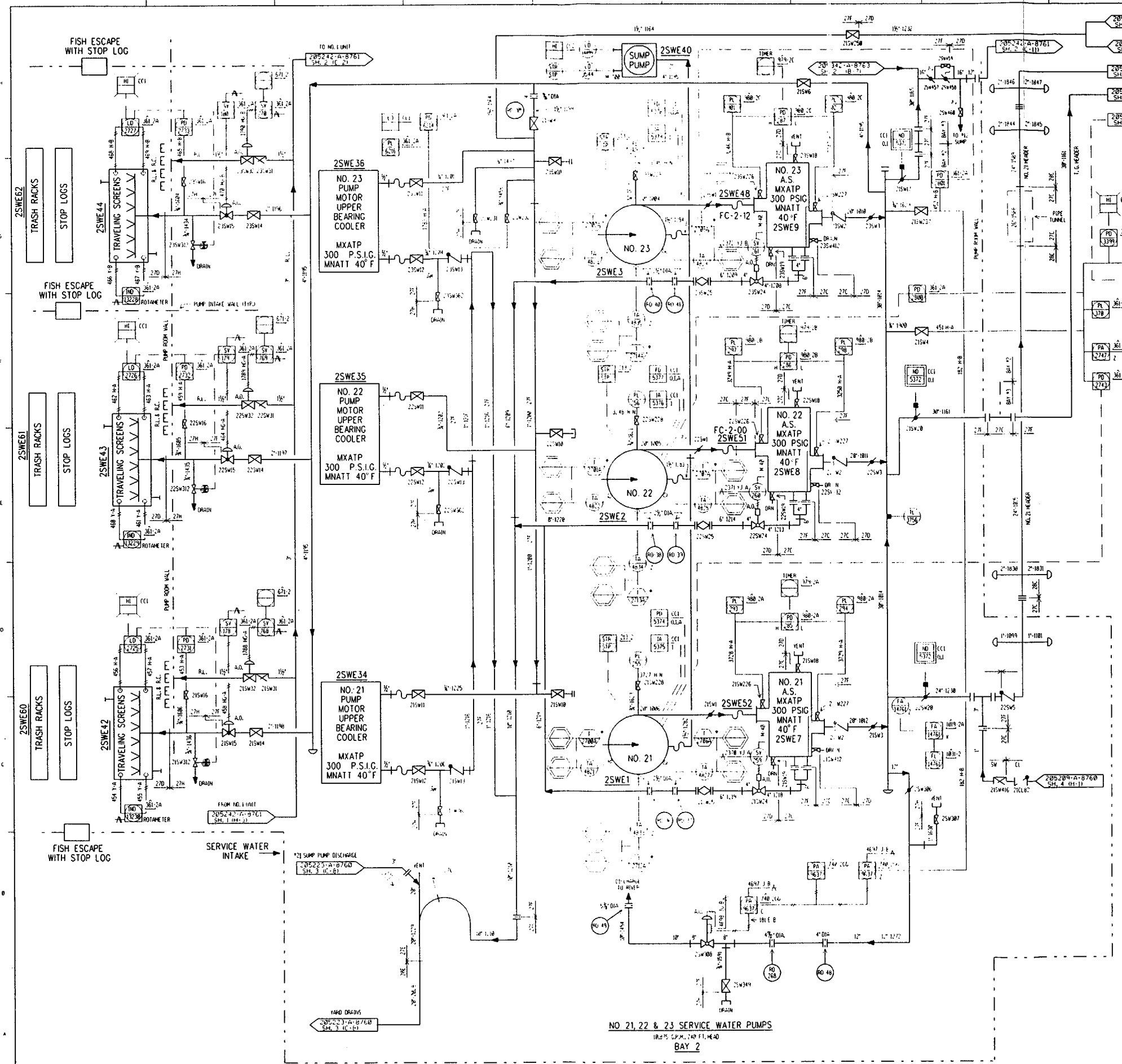

NOTES:

1. ALL PIPING NUMBERS SHALL HAVE THE PREFIX "2SW" (I.E. 2SW1888, ETC.) EXCEPT WHERE OTHERWISE NOTED.
2. ALL PRESSURES SHOWN ON EQUIPMENT ARE MAXIMUM ALLOWABLE PRESSURES FOR HYDROSTATIC TESTING PURPOSES ONLY. HYDROSTATIC PRESSURES AND TEMPERATURE PARAMETERS ARE TO BE AS DESIGNATED ON FIELD DIRECTIVE S-C-A900-MFD-851
3. ALL PIPING IS IN ACCORDANCE WITH PIPING SPECIFICATION S1-6200. THE PIPING SCHEDULE AND GROUP NO'S ARE 1527 & 1528 EXCEPT AS OTHERWISE NOTED.
4. ALL VALVE AIR OPERATORS (A.O.) TO BE UNDERSTOOD TO BE NUMBERED WITH THE VALVE GENERATION NUMBER-A.O. (E.G., 2SW312-AO).
5. ALL INSTRUMENTATION TO BE UNDERSTOOD TO CONTAIN THE PREFIX "2" FOR UNIT 2.
6. SW PIPING SPEC. 1527F, 1527G, 1527H MTL: 6% MOLY S.S.
7. TEMPORARY STRAINER TO BE PLACED IN LINE DURING FLUSHING AND PLANT

BOUNDARY *	DESIGN CLASSIFICATION			
	SAFETY RELATED	SEISMIC	NUCLEAR	QUALITY ASSUR.
1527B	YES	I	III	YES
1527C	YES	I	III	YES
1527D	NO	III	NONE	NO
1527E	NO	III	NONE	NO
1528B	YES	I	III	YES
1528C	YES	I	III	YES
1528D	NO	III	NONE	NO
1529	NO	III	NONE	NO
1527A	YES	I	II	YES
1527F	YES	I	III	YES
1527G	YES	I	III	YES
1527H	NO	III	NONE	NO
1527H	NO	III	NONE	NO
1527J	YES	I	II	YES
1553D	NO	III	NONE	NO

* IT SHALL BE UNDERSTOOD THAT BOUNDARY NUMBERS SHOWN ON THIS DRAWING SHALL CONTAIN THE PREFIX "1S" (I.E. 1544A, ETC.) UNLESS OTHERWISE NOTED.

REFERENCE DRAWINGS:

VALVE LIST	206766L
STEAM GENERATOR DRAINS & BLOWDOWN	205325-A-8763
RECIRCULATING WATER NUMBER	205309-A-8762
SERVICE WATER TURBINE AREA	205312-A-8762
WASTE DISPOSAL LIQUID	205339-A-8763
AUXILIARY FEED WATER	205336-A-8763
SERVICE WATER NUCLEAR NO. 1 UNIT	205242-A-8761
SERVICE WATER NUMBER 1 UNIT	205212-A-8768
SERVICE WATER NUCLEAR NO. 21 HEADERS	240676-B-9657-9
SERVICE WATER NUCLEAR NO. 21 HEADERS SH. 2	240715-B-9658-6
SERVICE WATER NUCLEAR NO. 22 HEADERS	240677-B-9657-18
SERVICE WATER NUCLEAR NO. 22 HEADERS SH. 2	240716-B-9658-8
SERVICE WATER PUMPS	232302-B-9688-15
NO. 21, 22 & 23 TRAVELING SCREENS	223127-B-9556-17
NO. 24, 25 & 26 TRAVELING SCREENS	223128-B-9556-17
CONTAINMENT VENTILATION	240658-B-9656-6
PUMP ROOM VENTILATION	239091-B-9639-7
HOT SHUTDOWN PNL. 213-2	219456-A-8933
SERVICE WATER SCREEN WASH CONT. PNL. 361-2A	219461-A-8933
VENTILATION & AIR CONDITIONING CHILLED WATER	226931-B-9581
EMERGENCY CONTROL AIR COMPRESSOR	240675-B-9657
RADIATION MONITORING SYS. CABINETS 110, 109, 75, 113, 114, 120	233048-A-1399
LEGEND SHEET	600658-A-8727

NOTE: FOR VALVE NUMBERS, NOTE SHOWN ON INDIVIDUAL SHEET, REFER TO SH. 1

Ref. Dwg. 205342-A-8763 Sh. 1 - 69

PUBLIC SERVICE ELECTRIC AND GAS COMPANY
SALEM NUCLEAR GENERATING STATION

Service Water System - Nuclear Area
Unit 2

Updated FSAR — Sheet 1 of 6
Revision 18, April 26, 2000 — Fig 9.2-1B

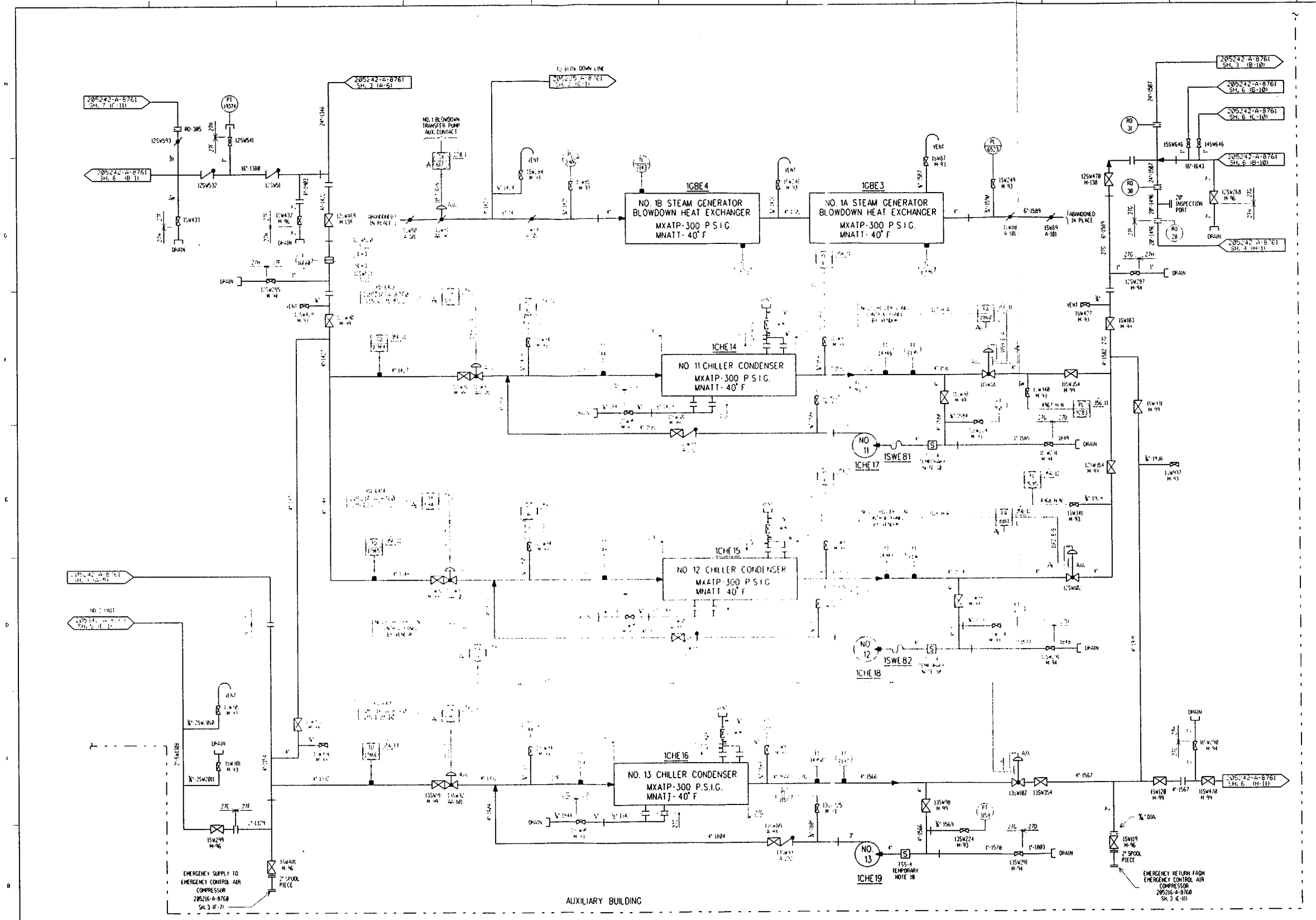

Ref. Dwg. 205242-A-8761 Sh. 5 - 69

PUBLIC SERVICE ELECTRIC AND GAS COMPANY
SALEM NUCLEAR GENERATING STATION

Service Water System - Nuclear Area
Unit 1

Updated FSAR Sheet 5 of 7
Revision 18, April 26, 2000 Fig 9.2-1A

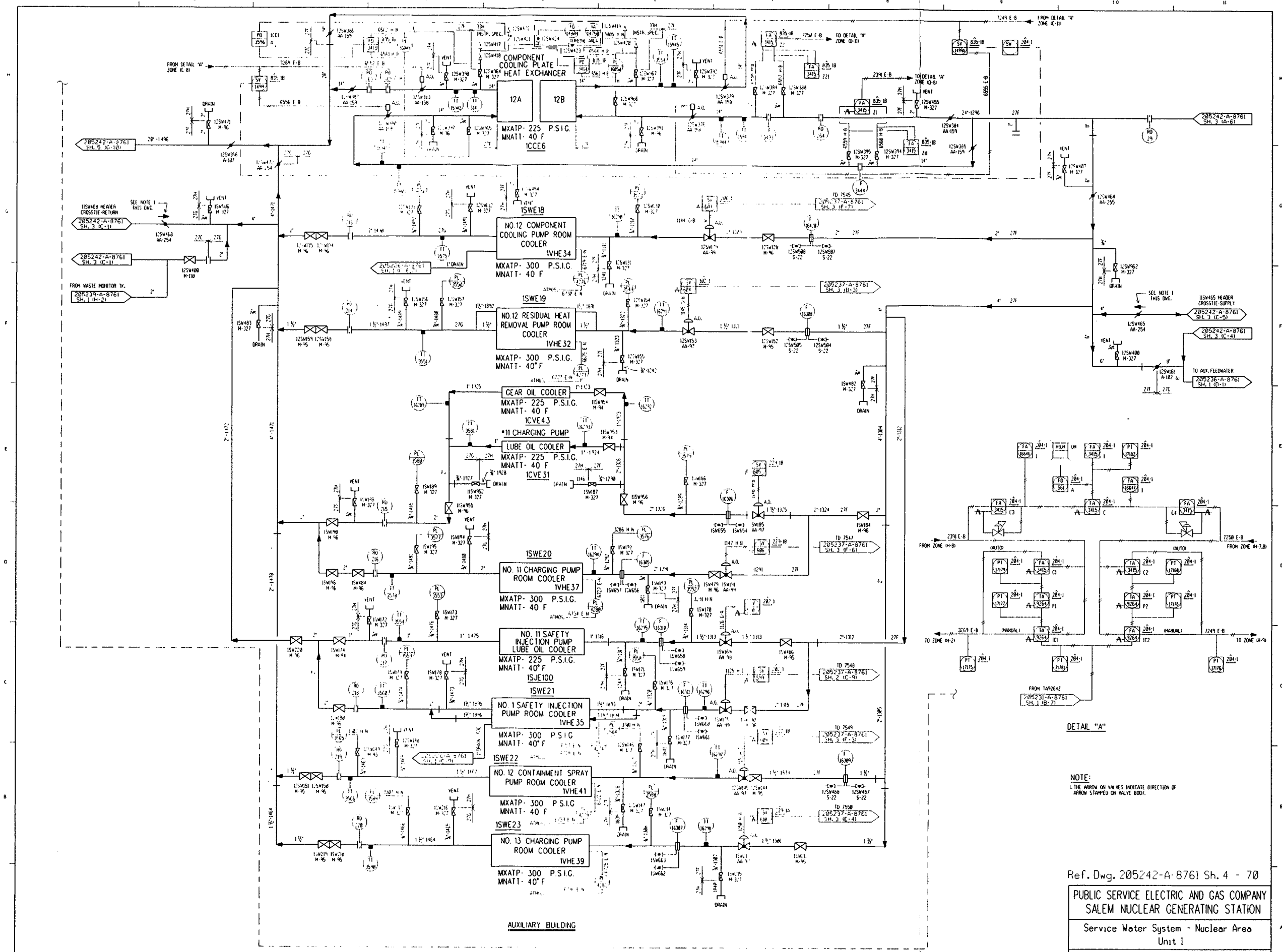

Ref. Dwg. 205242-A-8761 Sh. 4 - 70

PUBLIC SERVICE ELECTRIC AND GAS COMPANY SALEM NUCLEAR GENERATING STATION
Service Water System - Nuclear Area Unit 1
Updated FSAR Sheet 4 of 7 Revision 18, April 26, 2000 Fig 9.2-1A

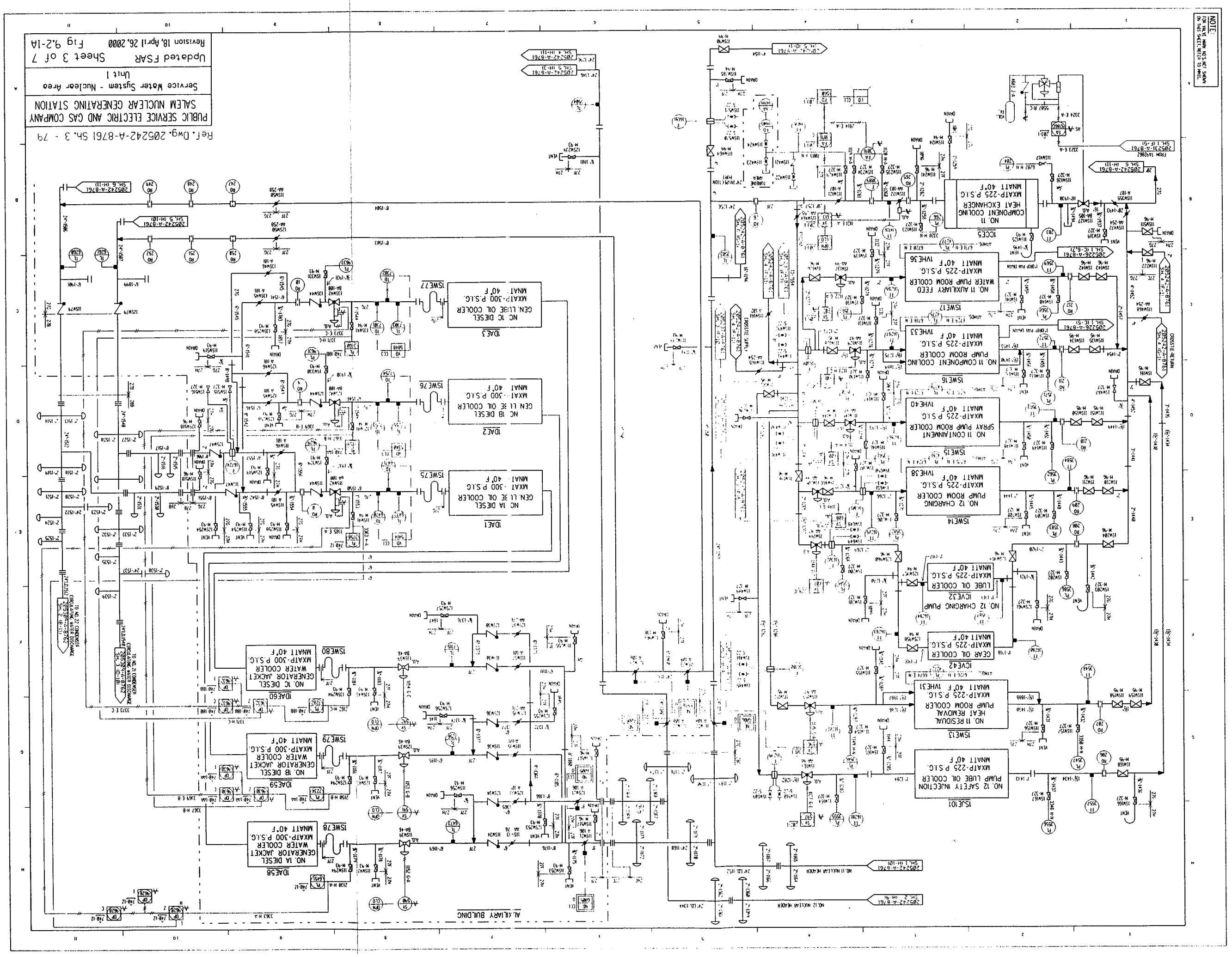

Ref. Dwg. 205242-A-8761 Sh. 3 - 79

PUBLIC SERVICE ELECTRIC AND GAS COMPANY
SALEM NUCLEAR GENERATING STATION

Service Water System - Nuclear Area
Unit 1

Updated FSAR Sheet 3 of 7
Revision 18, April 26, 2000 Fig 9.2-1A

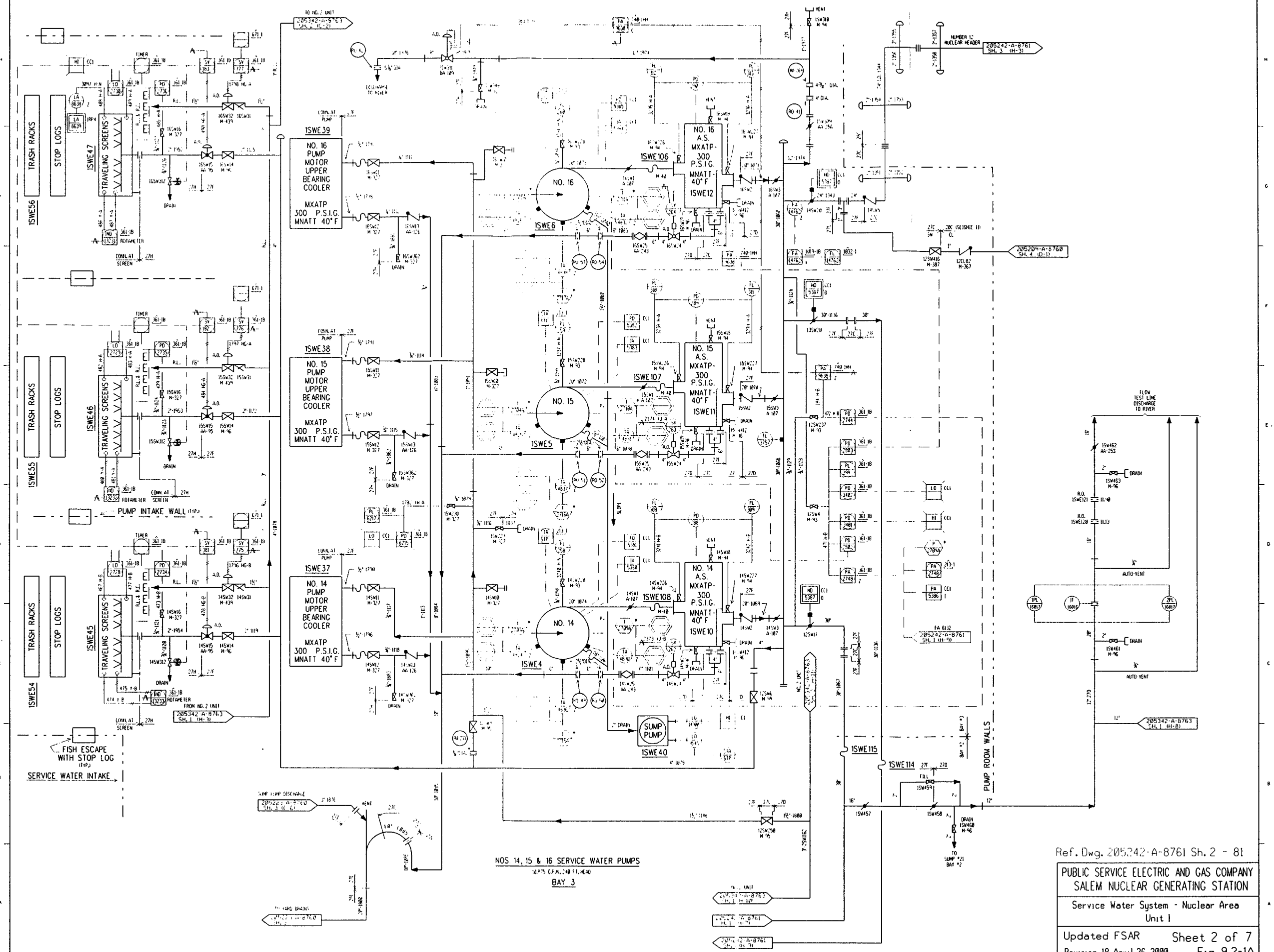

Ref. Dwg. 205242-A-8761 Sh. 2 - 81

PUBLIC SERVICE ELECTRIC AND GAS COMPANY
SALEM NUCLEAR GENERATING STATION

Service Water System - Nuclear Area
Unit 1

Updated FSAR Sheet 2 of 7
Revision 18, April 26, 2000 Fig 9.2-1A

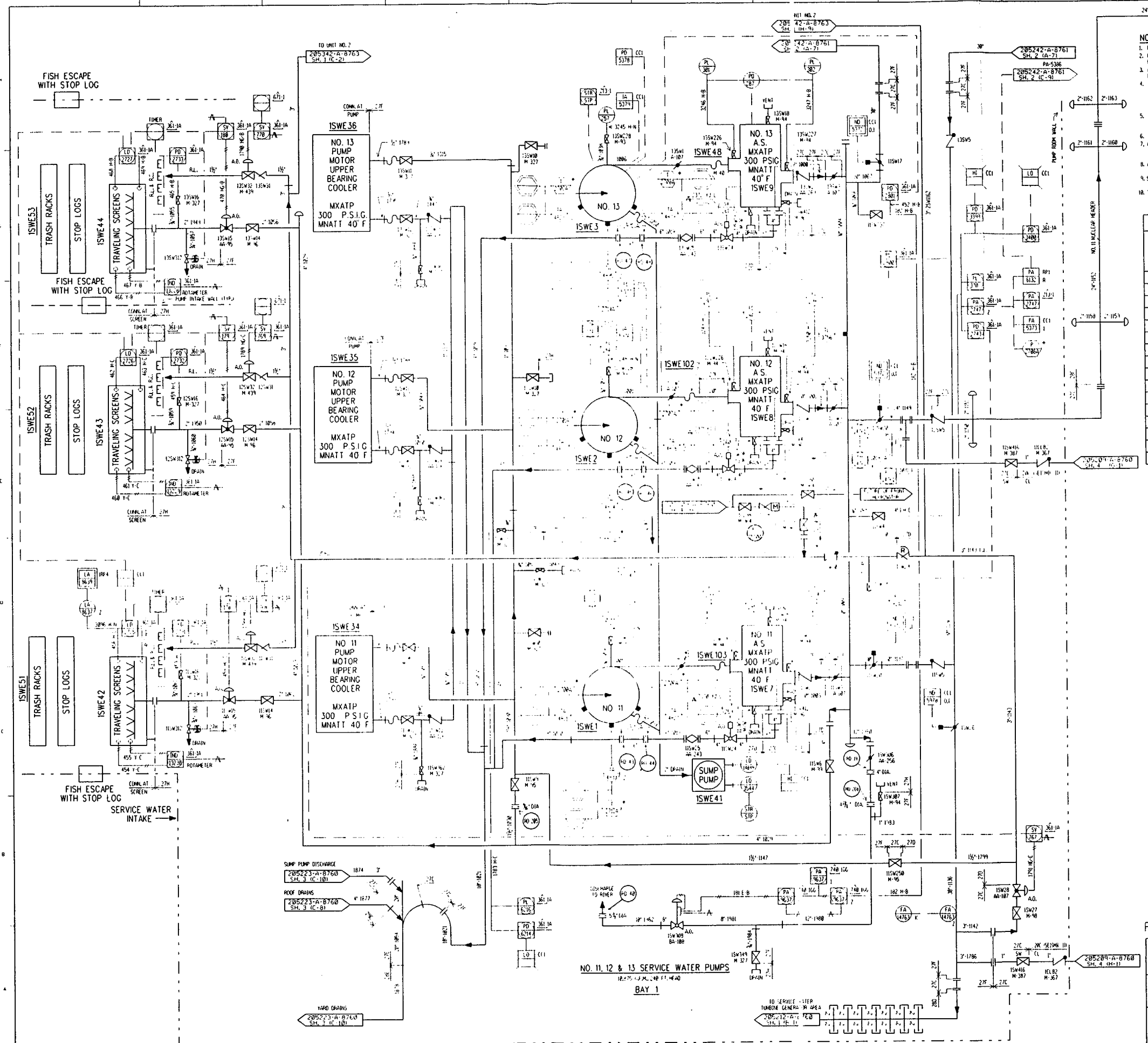

NOTES:

1. PIPING SCHEDULE DESIGNATIONS SHOWN ONLY FOR SEISMIC AND/OR NUCLEAR PIPING.
2. FOR DESIGN PRESSURE & TEMPERATURE PARAMETERS REFER TO THE DESIGN PRESSURE & TEMPERATURE PARAMETERS AT THE ORIGINAL SOURCE HEADER.
3. ALL PIPING NUMBERS SHALL HAVE THE PREFIX "1SW" (I.E. 1SW1000, ETC.) EXCEPT WHERE OTHERWISE NOTED.
4. ALL PRESSURES SHOWN ON EQUIPMENT ARE MAXIMUM ALLOWABLE PRESSURES FOR HYDROSTATIC TESTING PURPOSES ONLY. HYDROSTATIC PRESSURES AND TEMPERATURE PARAMETERS ARE TO BE AS DESIGNATED ON FIELD DIRECTIVE S-C-A900-MFD-051
5. ALL PIPING IS IN ACCORDANCE WITH PIPING SPECIFICATION 61-6200. THE PIPING SCHEDULE AND GROUP NOS. ARE AS NOTED ON THIS DRAWING AND PREFIXED WITH "1S".
6.
7. ALL VALVE AIR OPERATORS (A.O.) TO BE UNDERSTOOD TO BE NUMBERED WITH THE VALVE GENERATION NUMBER-A.O. (EX. 1SW32-40).
8. ALL INSTRUMENTATION TO BE UNDERSTOOD TO CONTAIN THE PREFIX "1" FOR UNIT 1.
9. SERVICE WATER PIPING SPEC 1S27F, 1S27G MTL 6% MOLY SS.
10. TEMPORARY STRAINER TO BE PLACED IN LINE DURING FLUSHING AND PLANT

DESIGN				
BOUNDARY *	CLASSIFICATION			
	SAFETY RELATED	SEISMIC	NUCLEAR	QUALITY ASSUR.
1S27B	YES	I	III	YES
1S27C	YES	I	III	YES
1S27D	NO	III	NONE	NO
1S27E	NO	III	NONE	NO
1S28B	YES	I	III	YES
1S28C	YES	I	III	YES
1S28D	NO	III	NONE	NO
1S29	NO	III	NONE	NO
1S27A	YES	I	II	YES
1S28C	NO	III	NONE	NO
1S27F	YES	I	III	YES
1S27G	YES	I	III	YES
1S27H	NO	III	NONE	NO
1S27I	YES	I	NONE	YES
1S27J	YES	I	II	YES
1S53D	NO	III	NONE	NO

* IT SHALL BE UNDERSTOOD THAT BOUNDARY NUMBERS SHOWN ON THIS DRAWING SHALL CONTAIN THE PREFIX "1S" (I.E. 1S44A, ETC.) UNLESS OTHERWISE NOTED.

Ref. Dwg. 205242-A-8761 Sh. 1 - 84

PUBLIC SERVICE ELECTRIC AND GAS COMPANY
SALEM NUCLEAR GENERATING STATION

Service Water System - Nuclear Area
Unit 1

Updated FSAR
Revision 18, April 26, 2000

Sheet 1 of 7
Fig 9.2-1A

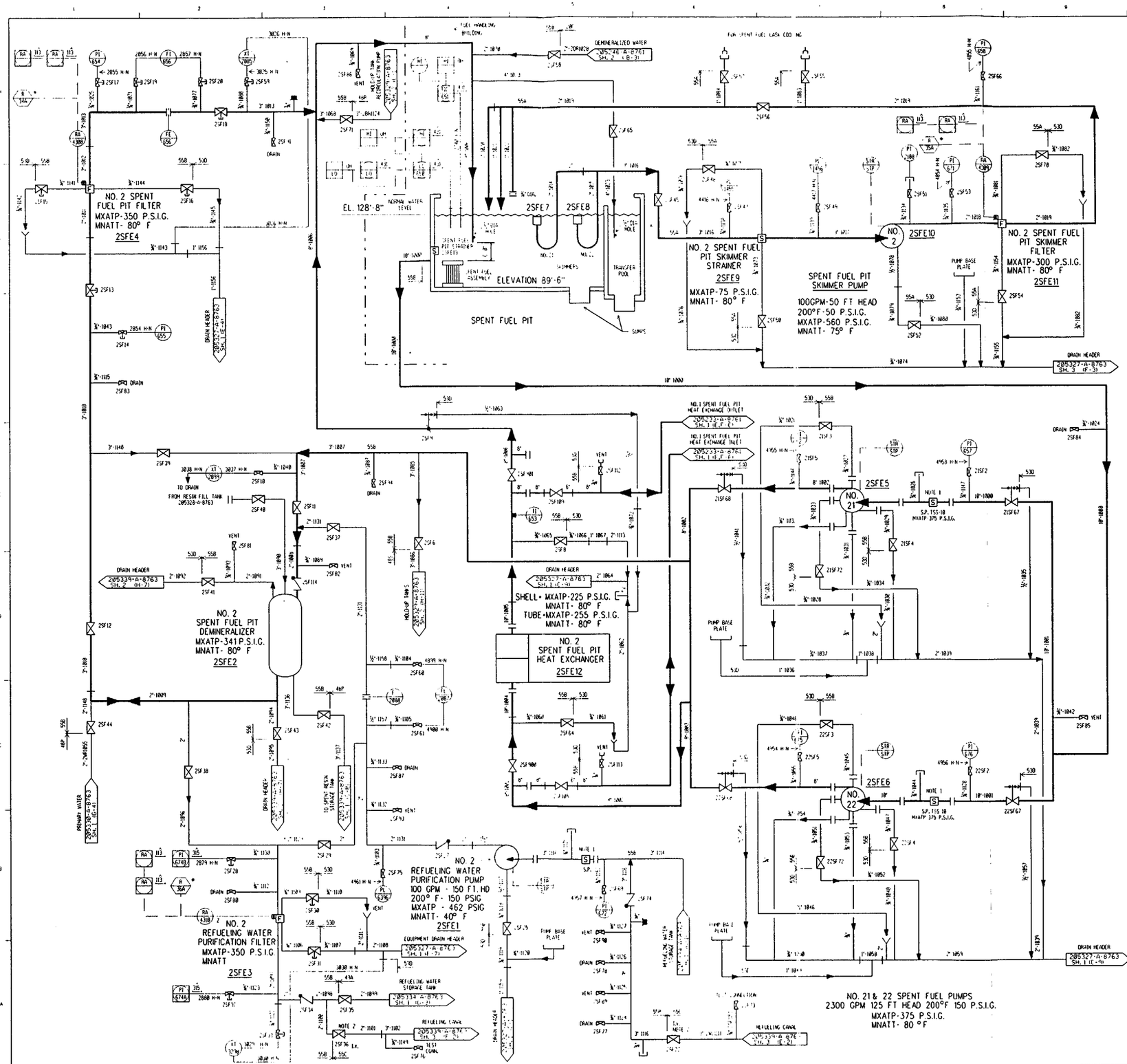

◆ BOUNDARY	DESIGN CLASSIFICATION			
	SAFETY RELATED	SEISMIC	NUCLEAR	QUALITY ASSUR.
1555A	NO	II	III	NO
1555B	NO	I	III	YES
1555C	YES	I	II	YES
1548P	NO	II	III	NO
1548R	NO	II	II	NO
1548S	NO	II	II	NO
1553D	NO	III	NONE	NO
1544A	YES	I	III	YES

◆ IT SHALL BE UNDERSTOOD THAT BOUNDARY NUMBERS SHOWN ON THIS DRAWING SHALL CONTAIN THE PREFIX "1S" (i.e. 1544A, ETC.) UNLESS OTHERWISE NOTED.

NOTES:

1. TEMPORARY STRAINER IS PLACED IN THE SPOOL PIECE DURING INITIAL FLUSHING OPERATIONS. STRAINER MUST BE REMOVED BEFORE PLANT START-UP. CAPPED LINE IS CONNECTED TO A TEMPORARY PRESSURE GAGE AT THIS TIME.
2. LOCATE VALVE AS CLOSE TO CONTAINMENT AS POSSIBLE.
3. ALL PIPE LINE NUMBERS SHALL BE UNDERSTOOD TO CONTAIN THE PREFIX "2SF" (i.e. "2SF1000 ECT.) EXCEPT WHERE OTHERWISE NOTED.
4. ALL PRESSURES SHOWN ARE MAXIMUM ALLOWABLE PRESSURES FOR HYDROSTATIC TESTING PURPOSES ONLY. HYDROSTATIC PRESSURES AND TEMPERATURE PARAMETERS ARE TO BE AS DESIGNATED ON FIELD DIRECTIVE S-C-A900 MFD-051.
5. ALL PIPING IS IN ACCORDANCE WITH PIPING SPECIFICATION S-C MP88-MS-0001, PIPING SCHEDULE AND GROUP NO. 1555A EXCEPT AS OTHERWISE NOTED.
6. PIPING CLASS 530 WAS ORIGINALLY CLASSIFIED AS NUCLEAR CLASS III. DCP 2EA-1022 RECLASSIFIES PIPING CLASS 530 TO BE NON-NUCLEAR. ANY MAINTENANCE, REPAIR AND/OR MODIFICATION HENCEFORTH SHALL COMPLY WITH THE REQUIREMENTS OF RECLASSIFIED PIPING CLASS.
7. PIPING CLASS 558 HAS BEEN ANALYZED TO SEISMIC CATEGORY I AND THE ASSOCIATED COMPONENTS HAVE BEEN SEISMICALLY EVALUATED TO ENSURE THAT THE SFP COOLING FUNCTION IS MAINTAINED FOR A DESIGN BASIS EARTHQUAKE (DCP 2EC-0339).

Ref. Dwg. 205333-A-8763 Sh. 1 - 25

PUBLIC SERVICE ELECTRIC AND GAS COMPANY
SALEM NUCLEAR GENERATING STATION

Spent Fuel Cooling System
Unit 2

Updated FSAR — Sheet 1 of 1
Revision 18, April 26, 2000 — Fig 9.1-4B

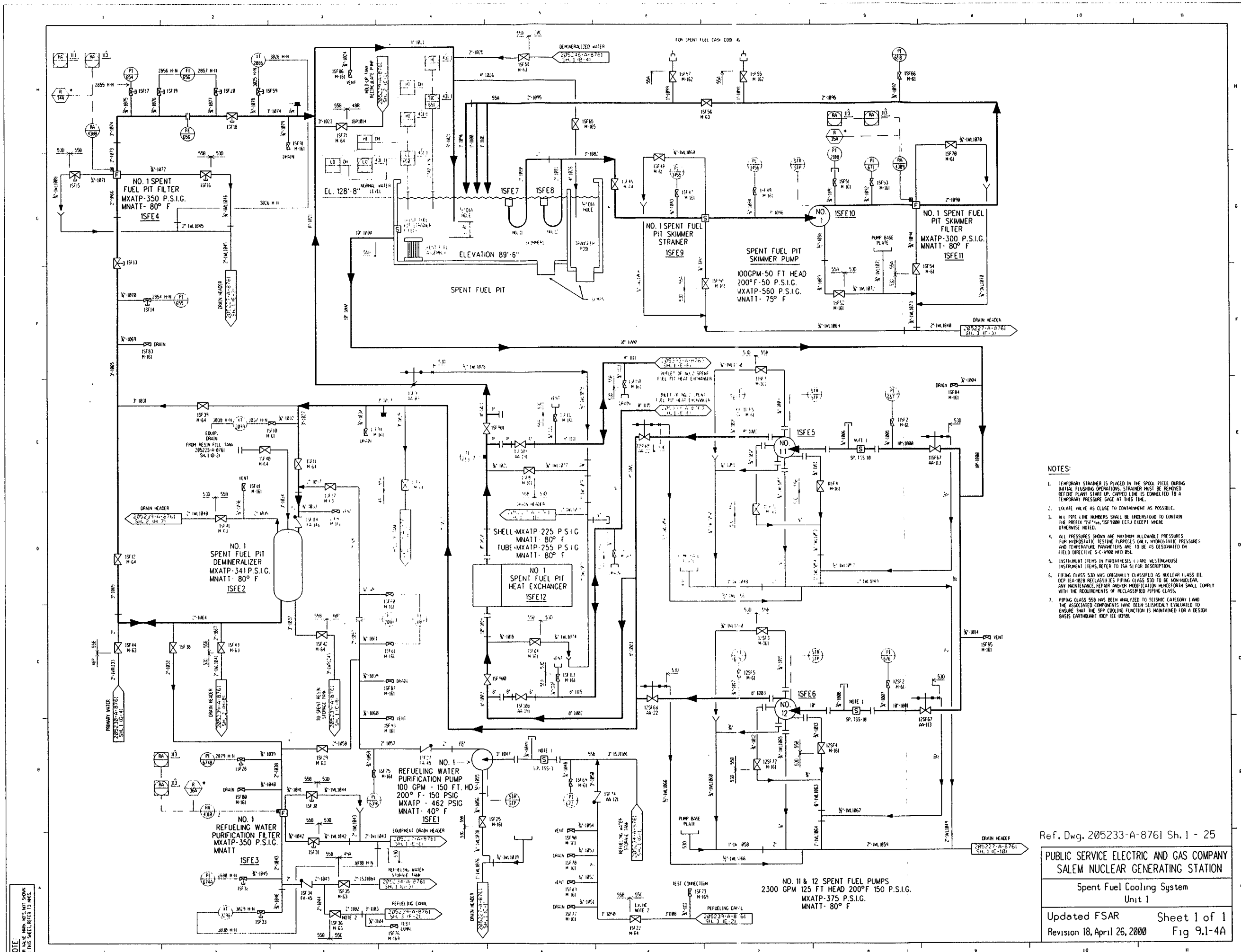

NOTES:

1. TEMPORARY STRAINER IS PLACED IN THE SPOOL PIECE DURING INITIAL FLUSHING OPERATIONS. STRAINER MUST BE REMOVED BEFORE PLANT START-UP. CAPPED LINE IS CONNECTED TO A TEMPORARY PRESSURE GAGE AT THIS TIME.
2. LOCATE VALVE AS CLOSE TO CONTAINMENT AS POSSIBLE.
3. ALL PIPE LINE NUMBERS SHALL BE UNDERSTOOD TO CONTAIN THE PREFIX "1SF" (ie, "1SF"1000 ECT.) EXCEPT WHERE OTHERWISE NOTED.
4. ALL PRESSURES SHOWN ARE MAXIMUM ALLOWABLE PRESSURES FOR HYDROSTATIC TESTING PURPOSES ONLY. HYDROSTATIC PRESSURES AND TEMPERATURE PARAMETERS ARE TO BE AS DESIGNATED ON FIELD DIRECTIVE S-C-A900 MFD 051.
5. INSTRUMENT ITEMS IN PARENTHESIS (.) ARE WESTINGHOUSE INSTRUMENT ITEMS. REFER TO ISA 51 FOR DESCRIPTION.
6. PIPING CLASS 530 WAS ORIGINALLY CLASSIFIED AS NUCLEAR CLASS III. DCP IEA-1028 RECLASSIFIES PIPING CLASS 530 TO BE NON-NUCLEAR. ANY MAINTENANCE, REPAIR AND/OR MODIFICATION HENCEFORTH SHALL COMPLY WITH THE REQUIREMENTS OF RECLASSIFIED PIPING CLASS.
7. PIPING CLASS 558 HAS BEEN ANALYZED TO SEISMIC CATEGORY I AND THE ASSOCIATED COMPONENTS HAVE BEEN SEISMICALLY EVALUATED TO ENSURE THAT THE SFP COOLING FUNCTION IS MAINTAINED FOR A DESIGN BASIS EARTHQUAKE (DCP IEE-03981).

Ref. Dwg. 205233-A-8761 Sh. 1 - 25

PUBLIC SERVICE ELECTRIC AND GAS COMPANY
SALEM NUCLEAR GENERATING STATION

Spent Fuel Cooling System
Unit 1

Updated FSAR — Sheet 1 of 1
Revision 18, April 26, 2000 — Fig 9.1-4A

NOTE: FOR VALVE MARK NOS. NOT SHOWN ON THIS SHEET, REFER TO MMS.

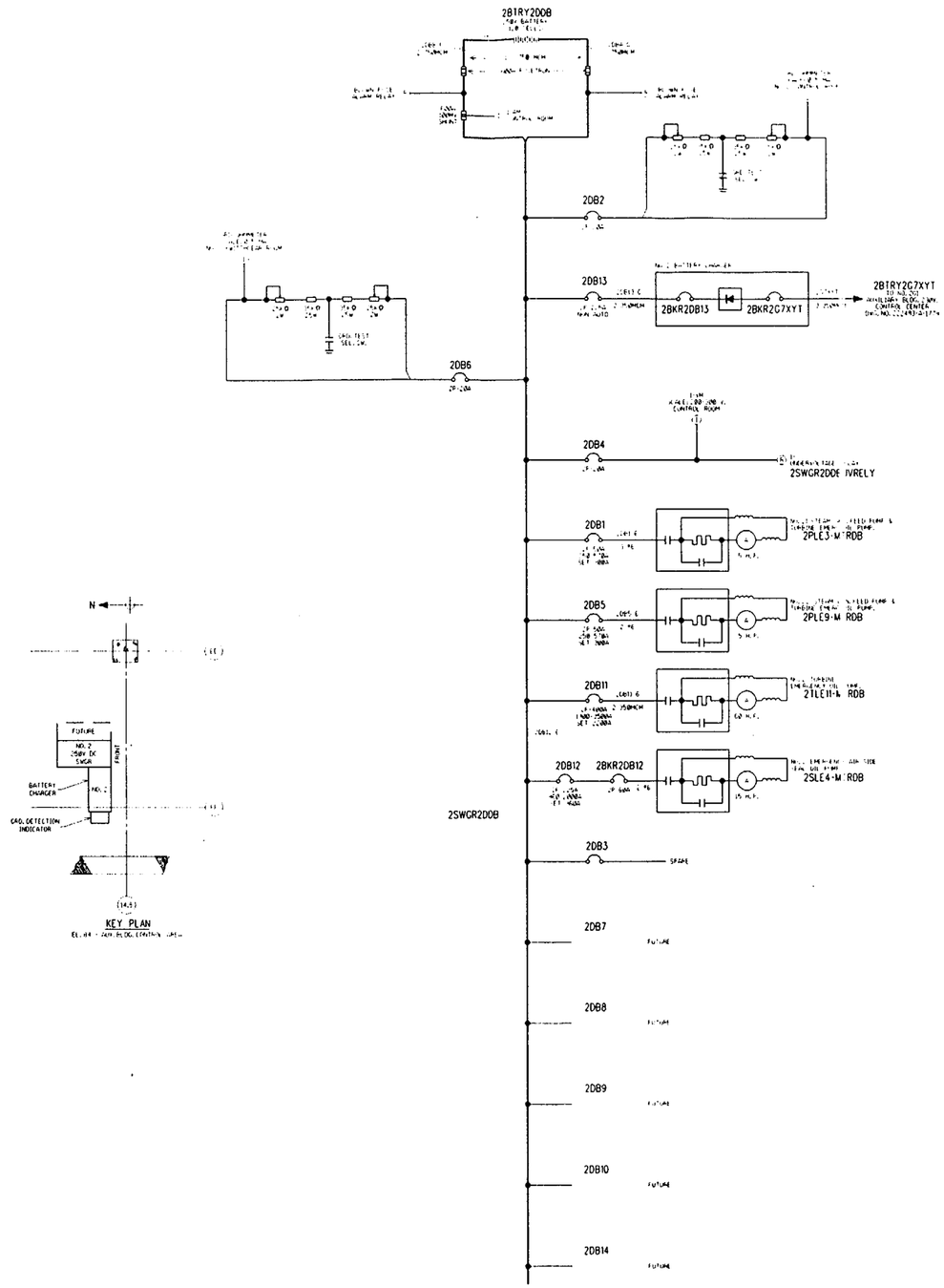

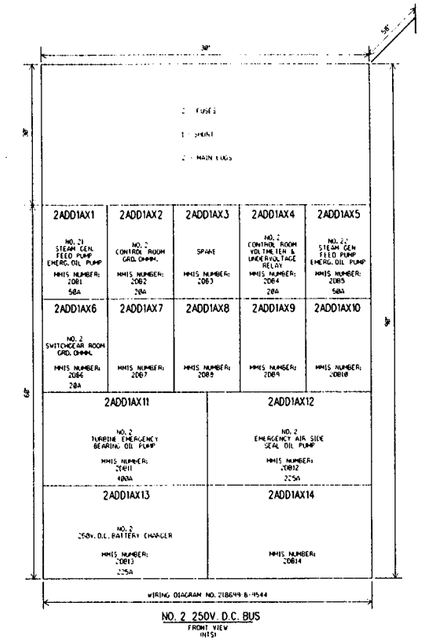

REFERENCE DRAWINGS:

NO. 2 UNIT 250V. D.C. BUS ..... W.O. ..... DWG. #218699-B-9544
NO. 1 & 2 UNITS STORAGE BATT. INST. & ALARM ..... SCH. ..... DWG. #211052-B-9784
NO. 1 & 2 UNITS D.C. BUS BLOWN MAIN FUSE ALARM ..... SCH. ..... DWG. #220816-A-1484
ONE LINE DIAGRAM SYMBOL LIST ..... DWG. #601658-B-9555
NO. 1 & 2 UNITS 250V. D.C. BUS ..... GEN. ARC'T. ..... PSBP #112727
NO. 1 & 2 UNITS 250V. BATTERY CHARGER ..... SCH. ..... PSBP #124016

NOTES:

1. ALL CIRCUIT BREAKERS SHALL BE 2-POLE & SHALL HAVE 20,000A. D.C. MINIMUM INTERRUPTING CAPACITY.

Ref. Dwg. 203008-A-1213 Sh. 2 - 11

PUBLIC SERVICE ELECTRIC AND GAS COMPANY
SALEM NUCLEAR GENERATING STATION

250V. D. C. ONE LINE
Unit 2

Updated FSAR
Revision 18, April 26, 2000

Sheet 2 of 2
Fig 8.3-8

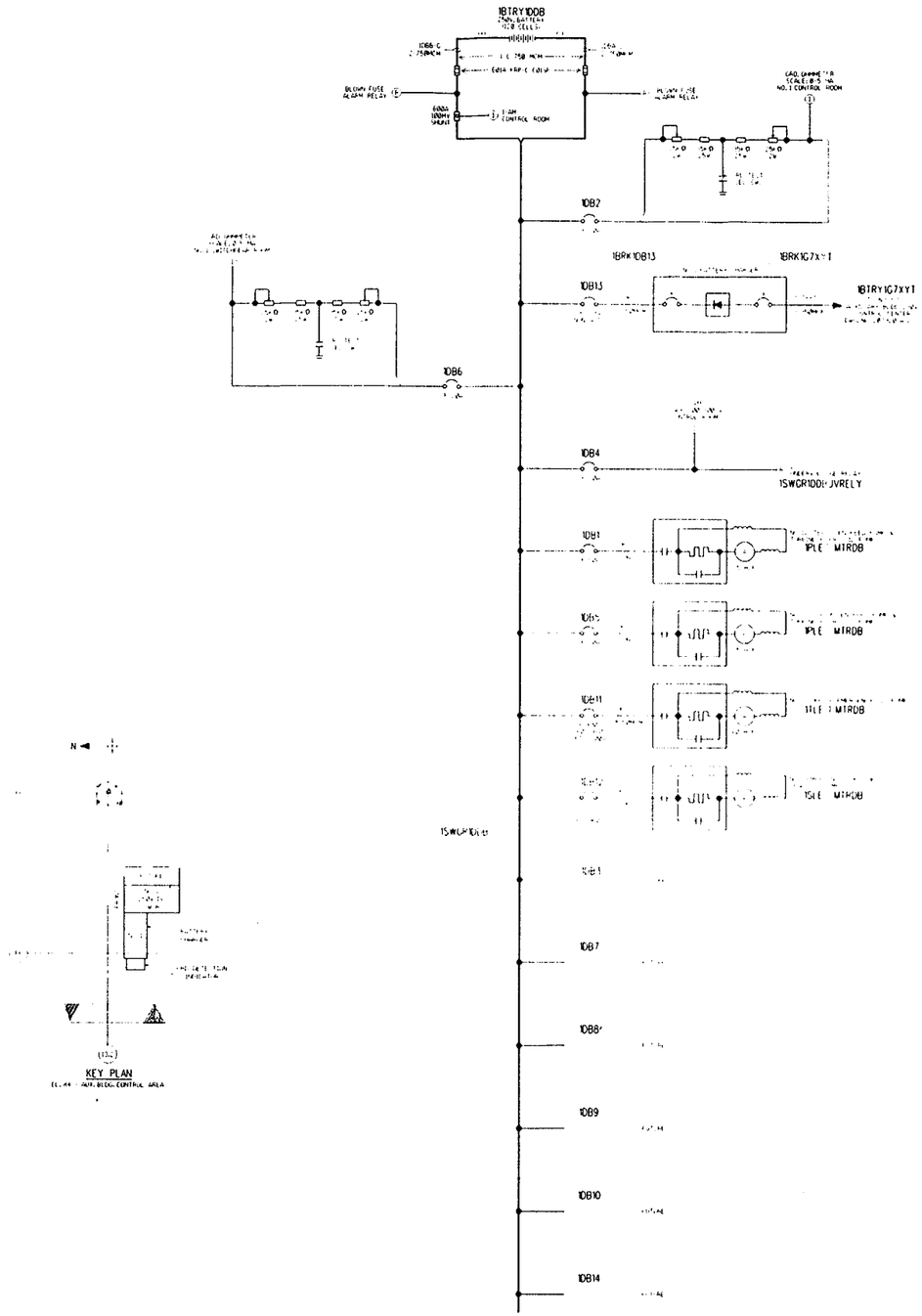

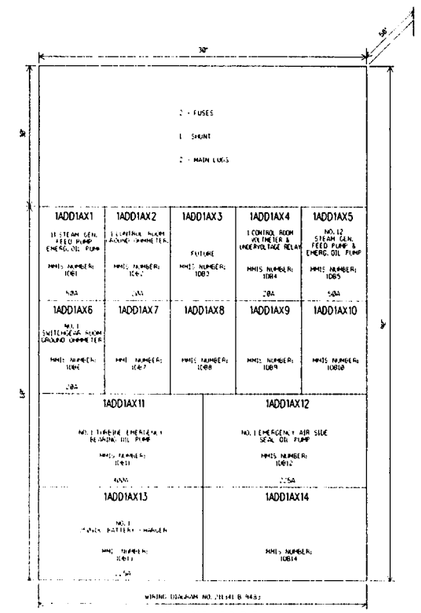

NO. 1 250V. D.C. BUS

KEY PLAN

REFERENCE DRAWINGS:

NOTES:

1. ALL CIRCUIT BREAKERS SHALL BE 2-POLE & SHALL HAVE 20,000A.D.C. MINIMUM INTERRUPTING CAPACITY.

Ref. Dwg. 203008-A-1213 Sh. 1 - 12

PUBLIC SERVICE ELECTRIC AND GAS COMPANY
SALEM NUCLEAR GENERATING STATION

250V. D. C. ONE LINE
Unit 1

Updated FSAR
Revision 18, April 26, 2000

Sheet 1 of 2
Fig 8.3-8

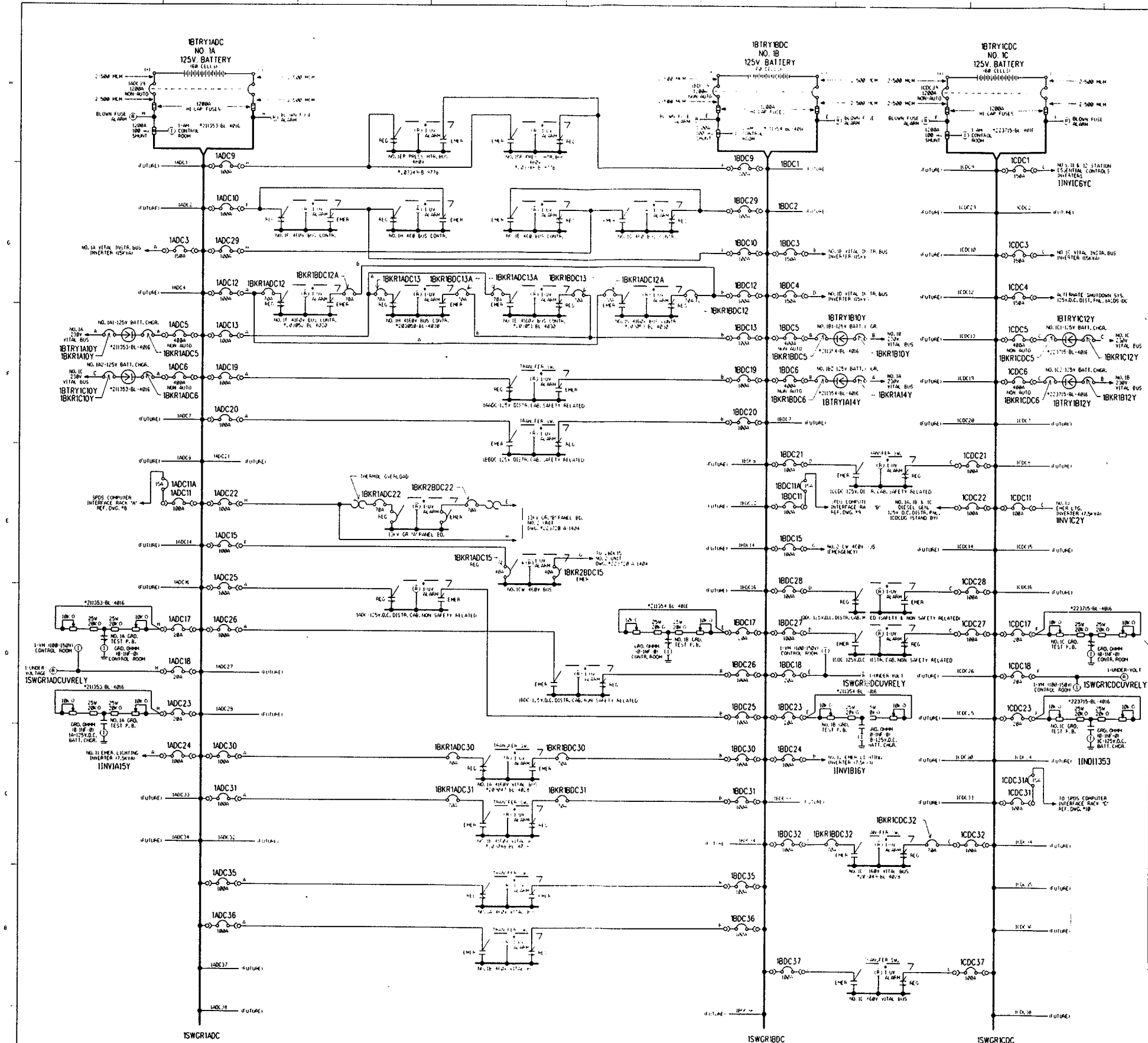

1 DISCONNECT 2 FUSES 1 SHUNT 4 MAIN LUGS 12 PER LEG1		1ADC1AX9 KF REG & KF EMER PRZ HTR BUSES CONTROL POWER NMIS NUMBER: 1ADC9 100A	1ADC1AX10 NO. 1F, 1H 460V. BUSES CONTR. PWR. (REG.1H EMER.) NMIS NUMBER: 1ADC10 100A	1ADC1AX11 SPDS 1A 125VDC BATTERY VOLTAGE NMIS NUMBER: 1ADC11 100A	1ADC1AX12 NO. 1F & 1G 4KV. BUSES CONTR. PWR. (F REG.1G EMER.) NMIS NUMBER: 1ADC12 100A	1ADC1AX13 NO. 1H, 1E 4KV. BUSES CONTR. PWR. (H REG.1E EMER.) NMIS NUMBER: 1ADC13 100A
		1ADC1AX14 NMIS NUMBER: 1ADC14	1ADC1AX15 1CKV 460V. BUS CONTR. PWR. (REG.) NMIS NUMBER: 1ADC15 100A	1ADC1AX16 NMIS NUMBER: 1ADC16	1ADC1AX17 1A 125VDC BUS CONTROL ROOM GROUND CHMMETER NMIS NUMBER: 1ADC17 20A	1ADC1AX18 1A 125VDC BUS UNDERVOLTAGE RELAY & CONTROL ROOM VOLTMETER NMIS NUMBER: 1ADC18 20A
1ADC1AX1 SPARE NMIS NUMBER: 1ADC1 150A	1ADC1AX2 NMIS NUMBER: 1ADC2	1ADC1AX19 1AADC 125VDC DISTR. CAB. (REG.) NMIS NUMBER: 1ADC19 100A	1ADC1AX20 1BBDC 125VDC DISTR. CAB. (EMER.) NMIS NUMBER: 1ADC20 100A	1ADC1AX21 NMIS NUMBER: 1ADC21	1ADC1AX22 4.16 REG & 1KV EMER 125VDC DISTRIBUTION PANEL NMIS NUMBER: 1ADC22 100A	1ADC1AX23 1A 125VDC BUS GROUND CHMMETER (BATTERY CHARGER AREA) NMIS NUMBER: 1ADC23 20A
1ADC1AX3 1A VITAL INSTR. BUS INVERTER NMIS NUMBER: 1ADC3 150A	1ADC1AX4 NMIS NUMBER: 1ADC4	1ADC1AX24 1A EMERGENCY LIGHTING INVERTER 17.5KVA NMIS NUMBER: 1ADC24 100A	1ADC1AX25 1ADC 125VDC DISTR. CAB. (REG.) NMIS NUMBER: 1ADC25 100A	1ADC1AX26 1BDC 125VDC DISTR. CAB. (EMER.) NMIS NUMBER: 1ADC26 100A	1ADC1AX27 NMIS NUMBER: 1ADC27	1ADC1AX28 NMIS NUMBER: 1ADC28
1ADC1AX5 NO. 1A1 125V. BATTERY CHARGER NMIS NUMBER: 1ADC5 400A	1ADC1AX6 NO. 1A2 125V. BATTERY CHARGER NMIS NUMBER: 1ADC6 400A	1ADC1AX29 NO. 1E & 1G 460V. BUSES CONTR. PWR. (E REG.1G EMER.) NMIS NUMBER: 1ADC29 100A	1ADC1AX30 1A 4KV BUS CONTR. PWR. (REG.) NMIS NUMBER: 1ADC30 100A	1ADC1AX31 1B 4KV BUS VITAL BUS CONTR. PWR. (EMER.) NMIS NUMBER: 1ADC31 100A	1ADC1AX32 NMIS NUMBER: 1ADC32	1ADC1AX33 NMIS NUMBER: 1ADC33
1ADC1AX7 NMIS NUMBER: 1ADC7	1ADC1AX8 NMIS NUMBER: 1ADC8	1ADC1AX34 NMIS NUMBER: 1ADC34	1ADC1AX35 NO. 1A 460V. VITAL BUS CONTR. PWR. (REG.) NMIS NUMBER: 1ADC35 100A	1ADC1AX36 NO. 1B 460V. VITAL BUS CONTR. PWR. (EMER.) NMIS NUMBER: 1ADC36 100A	1ADC1AX37 NMIS NUMBER: 1ADC37	1ADC1AX38 NMIS NUMBER: 1ADC38

FRONT VIEW
NO. 1A 125V D.C. BUS

1 DISCONNECT 2 FUSES 1 SHUNT 4 MAIN LUGS 12 PER LEG1		1BDC1AX9 1CPRED & 1CEMERG PRESS.HTR. BUSES CONTR.PWR. NMIS NUMBER: 1BDC9 100A	1BDC1AX10 NO.1H & 1F 460V.BUSES CONTR. PWR. (H REG.1F EMER.) NMIS NUMBER: 1BDC10 100A	1BDC1AX11 SPDS 1B 125VDC BUS BATTERY VOLTAGE NMIS NUMBER: 1BDC11 100A	1BDC1AX12 NO.1G & 1F 4KV BUSES CONTR.PWR. (G REG.1F EMER.) NMIS NUMBER: 1BDC12 100A	1BDC1AX13 NO.1E & 1H 4KV BUSES CONTR.PWR. (E REG.1H EMER.) NMIS NUMBER: 1BDC13 100A
		1BDC1AX14 NMIS NUMBER: 1BDC14	1BDC1AX15 2CKV 460V.BUS EMER.CONTR.PWR. NMIS NUMBER: 1BDC15 100A	1BDC1AX16 NMIS NUMBER: 1BDC16	1BDC1AX17 1B 125VDC BUS CONTROL ROOM GROUND CHMMETER NMIS NUMBER: 1BDC17 20A	1BDC1AX18 1B 1VDC BUS UNDERVOLTAGE RELAY & CONTROL ROOM VOLTMETER NMIS NUMBER: 1BDC18 20A
1BDC1AX1 NMIS NUMBER: 1BDC1	1BDC1AX2 NMIS NUMBER: 1BDC2	1BDC1AX19 1BADC 125VDC DISTR. CABINET EMERG. PWR. NMIS NUMBER: 1BDC19 100A	1BDC1AX20 1BBDC 125VDC DISTR. CABINET REG. NMIS NUMBER: 1BDC20 100A	1BDC1AX21 1CCDC 125VDC DISTR. CABINET EMERG. PWR. NMIS NUMBER: 1BDC21 100A	1BDC1AX22 NMIS NUMBER: 1BDC22	1BDC1AX23 1B 125VDC BUS GRD. CHMMETER (BATTERY CHARGE AREA) NMIS NUMBER: 1BDC23 20A
1BDC1AX3 1B VITAL INSTR. BUS INVERTER NMIS NUMBER: 1BDC3 150A	1BDC1AX4 1B VITAL INSTR. BUS INVERTER NMIS NUMBER: 1BDC4 150A	1BDC1AX24 1B EMERG.LGT. INVERTER NORMAL FEED 17.5KVA NMIS NUMBER: 1BDC24 100A	1BDC1AX25 1ADC-125VDC DISTR. CAB. EMER. POWER NMIS NUMBER: 1BDC25 100A	1BDC1AX26 1BDC-125VDC DISTR. CAB. REG. POWER NMIS NUMBER: 1BDC26 100A	1BDC1AX27 1CDC-125VDC DISTR. CAB. EMER. POWER NMIS NUMBER: 1BDC27 100A	1BDC1AX28 1DDC-125VDC DISTR. CAB. REG. POWER NMIS NUMBER: 1BDC28 100A
1BDC1AX5 NO. 1B1 125V. BATTERY CHARGER NMIS NUMBER: 1BDC5 400A	1BDC1AX6 NO. 1B2 125V. BATTERY CHARGER NMIS NUMBER: 1BDC6 400A	1BDC1AX29 NO.1G & 1E 4kV.BUSES CONTR.PWR. (G REG.1E EMER.) NMIS NUMBER: 1BDC29 100A	1BDC1AX30 1A 4KV VITAL BUS EMERG. CONTR. PWR. NMIS NUMBER: 1BDC30 100A	1BDC1AX31 1B 4KV VITAL BUS REG. CONTR. PWR. NMIS NUMBER: 1BDC31 100A	1BDC1AX32 1C 4KV VITAL BUS EMERG. CONTR. PWR. NMIS NUMBER: 1BDC32 100A	1BDC1AX33 NMIS NUMBER: 1BDC33
1BDC1AX7 NMIS NUMBER: 1BDC7	1BDC1AX8 NMIS NUMBER: 1BDC8	1BDC1AX34 NMIS NUMBER: 1BDC34	1BDC1AX35 1A 460V VITAL BUS EMERG. CONTR. PWR. NMIS NUMBER: 1BDC35 100A	1BDC1AX36 1B 460V VITAL BUS REG. CONTR. PWR. NMIS NUMBER: 1BDC36 100A	1BDC1AX37 1C 460V VITAL BUS EMERG. CONTR. PWR. NMIS NUMBER: 1BDC37 100A	1BDC1AX38 NMIS NUMBER: 1BDC38

FRONT VIEW
NO. 1B 125V D.C. BUS

1CDC1AX9 NMIS NUMBER: 1CDC9	1CDC1AX10 NMIS NUMBER: 1CDC10	1CDC1AX11 NO. 1D EMERG. LTG. INVERTER 17.5KVA NMIS NUMBER: 1CDC11 100A	1CDC1AX12 NMIS NUMBER: 1CDC12	1CDC1AX13 NMIS NUMBER: 1CDC13	1 DISCONNECT 2 FUSES 1 SHUNT 4 MAIN LUGS 12 PER LEG1	
1CDC1AX14 NMIS NUMBER: 1CDC14	1CDC1AX15 NMIS NUMBER: 1CDC15	1CDC1AX16 NMIS NUMBER: 1CDC16	1CDC1AX17 1C 125VDC BUS CONTROL ROOM GROUND CHMMETER NMIS NUMBER: 1CDC17 20A	1CDC1AX18 1C 125VDC BUS UNDER-VOLT. RELAY CONTROL ROOM VOLTMETER NMIS NUMBER: 1CDC18 20A		
1CDC1AX19 NMIS NUMBER: 1CDC19	1CDC1AX20 NMIS NUMBER: 1CDC20	1CDC1AX21 1CCDC 125VDC DISTR. CABINET REG. POWER NMIS NUMBER: 1CDC21 100A	1CDC1AX22 1CDDC DIESEL GEN. STANDBY 125VDC DISTR. PNL. NMIS NUMBER: 1CDC22 100A	1CDC1AX23 1C 125VDC BUS CAB. CHMMETER (BATTERY CHARGE AREA) NMIS NUMBER: 1CDC23 20A	1CDC1AX1 1A & 1C STA. ESSENTIAL CONTROL'S INVERTER NMIS NUMBER: 1CDC1 150A	1CDC1AX2 NMIS NUMBER: 1CDC2
1CDC1AX24 NMIS NUMBER: 1CDC24	1CDC1AX25 NMIS NUMBER: 1CDC25	1CDC1AX26 NMIS NUMBER: 1CDC26	1CDC1AX27 1CDC-125VDC DISTR. CAB. REG. POWER NMIS NUMBER: 1CDC27 100A	1CDC1AX28 1DDC-125VDC DISTR. CAB. EMER. POWER NMIS NUMBER: 1CDC28 100A	1CDC1AX3 1C VITAL INSTR. BUS INVERTER NMIS NUMBER: 1CDC3 150A	1CDC1AX4 ALTERNATE SHUTDOWN SYS. 125VDC DISTR.PNL. MCBS DC NMIS NUMBER: 1CDC4 150A
1CDC1AX29 NMIS NUMBER: 1CDC29	1CDC1AX30 NMIS NUMBER: 1CDC30	1CDC1AX31 SPDS 1C 125VDC BATTERY VOLTAGE NMIS NUMBER: 1CDC31 100A	1CDC1AX32 1C 4KV VITAL BUS REGULAR CONTROL POWER NMIS NUMBER: 1CDC32 100A	1CDC1AX33 NMIS NUMBER: 1CDC33	1CDC1AX5 NO. 1C1 125V. BATTERY CHARGER NMIS NUMBER: 1CDC5 400A	1CDC1AX6 NO. 1C2 125V. BATTERY CHARGER NMIS NUMBER: 1CDC6 400A
1CDC1AX34 NMIS NUMBER: 1CDC34	1CDC1AX35 NMIS NUMBER: 1CDC35	1CDC1AX36 NMIS NUMBER: 1CDC36	1CDC1AX37 1C 460V VITAL BUS REG. CONTROL POWER NMIS NUMBER: 1CDC37 100A	1CDC1AX38 NMIS NUMBER: 1CDC38	1CDC1AX7 NMIS NUMBER: 1CDC7	1CDC1AX8 NMIS NUMBER: 1CDC8

FRONT VIEW
NO. 1C 125V D.C. BUS

Ref. Dwg. 203007-A-8789 Sh. 1 - 28

NOTES:

1. ALL EQUIPMENT DESIGNATIONS INDICATE THE ZONE WHERE EQUIPMENT IS LOCATED. MINIMUM INTERGROUPING IS ZONE 2.
2. —○/○— MULTIPLE TYPE DEVICE ON SAME ZONE
3. * DENOTES MECH. INTERLOCK: NORMALLY ENERGIZED EMERGENCY

REFERENCE DRAWINGS:

1. NO. 1A 125V.D.C. BUS - 1 LINE
2. NO. 1B 125V.D.C. BUS - 1 LINE
3. NO. 1C 125V.D.C. BUS - 1 LINE
4. SEPARATION REQUIREMENTS ZONE 2 TYP.
5. NO. 1A & 1B 125V.D.C. BUS ARRANGEMENT
6. NO. 1C 125V.D.C. BUS ARRANGEMENT
7. NO. 2A, 2B, 2C 125V.D.C. SCHEMATIC DIAG.
8. SPDS COMPUTER INTERFACE RACK "A"
9. SPDS COMPUTER INTERFACE RACK "B"
10. SPDS COMPUTER INTERFACE RACK "C"

PUBLIC SERVICE ELECTRIC AND GAS COMPANY
SALEM NUCLEAR GENERATING STATION

125 V.D.C. ONE LINE
Unit 1

Updated FSAR — Sheet 1 of 1
Revision 18, April 26, 2000 — Fig 8.3-7

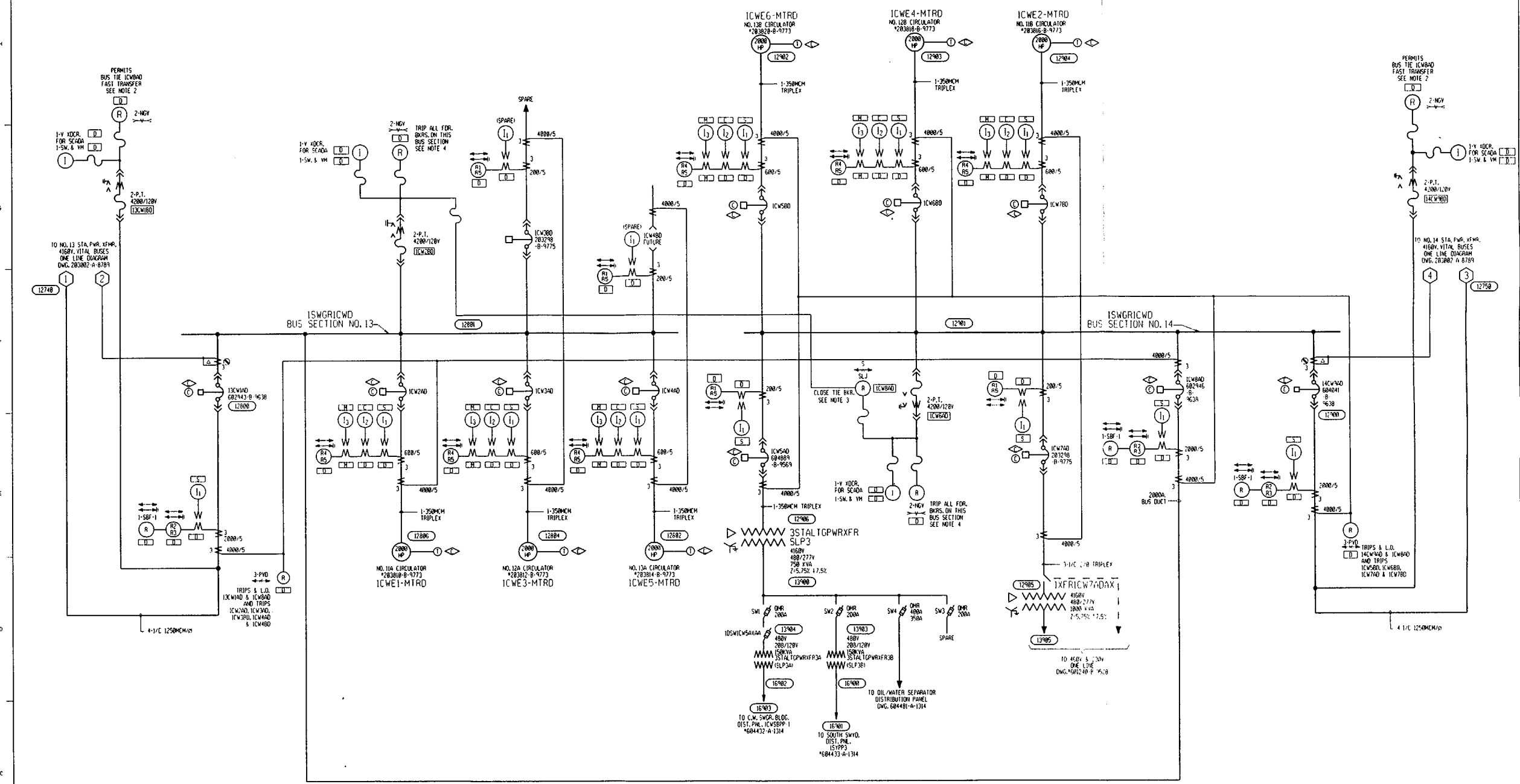

BOTTOM	TOP
13CW14AD	13CW18D
ICW24D	ICW28D
ICW34D	ICW38D
ICW44D	ICW48D
ICW54D	ICW58D
ICW64D	ICW68D
ICW74D	ICW78D
ICWB4D	ICWB8D
14CW94D	14CW98D

FRONT

KEY PLAN
ELEV. 101'-6"
(NOT TO SCALE)

MULTI-RATIO C.T.'S

3000 4000-5000/5.....DWG. *30226-D-496

NOTES:

1. ALL BREAKERS ARE 1200 AMP EXCEPT FOR MAIN BREAKERS 13CW14AD & 14CW94AD AND BUS TIE BREAKER ICWB4AD ARE 2000 AMP.
2. A LOSS OF VOLTAGE TO A BUS SECTION DUE TO LINE UNDERVOLTAGE SHALL TRIP THE ASSOCIATED INFEED BREAKER FOR THAT BUS SECTION.
3. THE ASSOCIATED BUS SECTION TIE BREAKER SHALL CLOSE PROVIDED THE PROPER MAGNITUDE OF VOLTAGE & PHASE ANGLE IS WITHIN RANGE.
4. AFTER RECIEPT OF BUS UNDERVOLTAGE SIGNAL, A TIMING RELAY SHALL TRIP ALL LOADS CONNECTED TO THE BUS SECTION. RESTORATION TO A POWER SOURCE SHALL BE DONE THROUGH A MANUALLY INITIATED TRANSFER.
5. FOR MMIS NUMBERS SEE REF SCHEMATIC DRAWINGS

LOCATION INDEX & ABBREV'S

- D - 4160 V CUBICLE AT WHICH EQUIP. IS SHOWN
- C - MCL CONSOLE IN CONTROL ROOM.
- S - SCADA TERMINATION CABINET No. 1169-1
- M - SPDS MULTIPLEXER
- EQUIP. DESIGNATION
- ALARM
- CONTROL
- TEMP CONTROL
- INDICATES NODE NUMBERS FOR LOAD MANAGEMENT STUDY.

RELAY & INSTR. FUNCTIONS

- R - AS SHOWN
- R1 - VERY INVERSE OVERCURRENT RELAY WITH INSTANTANEOUS TRIP
- R2 - VERY INVERSE OVERCURRENT RELAY
- R3 - VERY INVERSE CURRENT GND. RELAY
- R4 - LONG TIME INVERSE OVERCURRENT RELAY WITH INSTANTANEOUS TRIP (φA & φC)
- R5 - SHORT TIME INVERSE CURRENT GND. RELAY
- I_1 - 1 - SCADA φ B & TRANSDUCER
- I_2 - 1 - AM φ B & TRANSDUCER
- I_3 - 1 - SPDS φ B & TRANSDUCER

REFERENCE DRAWINGS

RELAY SETTING DIAGRAM	DWG. *283123-B-9765
BUS SECT. NO. 13 DIFFERENTIAL SCHEMATIC	DWG. *602952-B-9638
BUS SECT. NO. 14 DIFFERENTIAL SCHEMATIC	DWG. *602955-B-9638
LINE STA. 13 POTENTIAL SCHEMATIC	DWG. *602941-B-9638
LINE STA. 14 POTENTIAL SCHEMATIC	DWG. *602944-B-9638
BUS SECT. NO. 13 POTENTIAL SCHEMATIC	DWG. *602951-B-9638
BUS SECT. NO. 14 POTENTIAL SCHEMATIC	DWG. *602954-B-9638

Ref. Dwg. 602939-A-1288 Sh. 1 - 04

PUBLIC SERVICE ELECTRIC AND GAS COMPANY
SALEM NUCLEAR GENERATING STATION

4160V CIRCULATING WATER BUSES ONE LINE
Unit 1

Updated FSAR
Revision 18, April 26, 2000

Sheet 1 of 1
Fig 8.3-4c

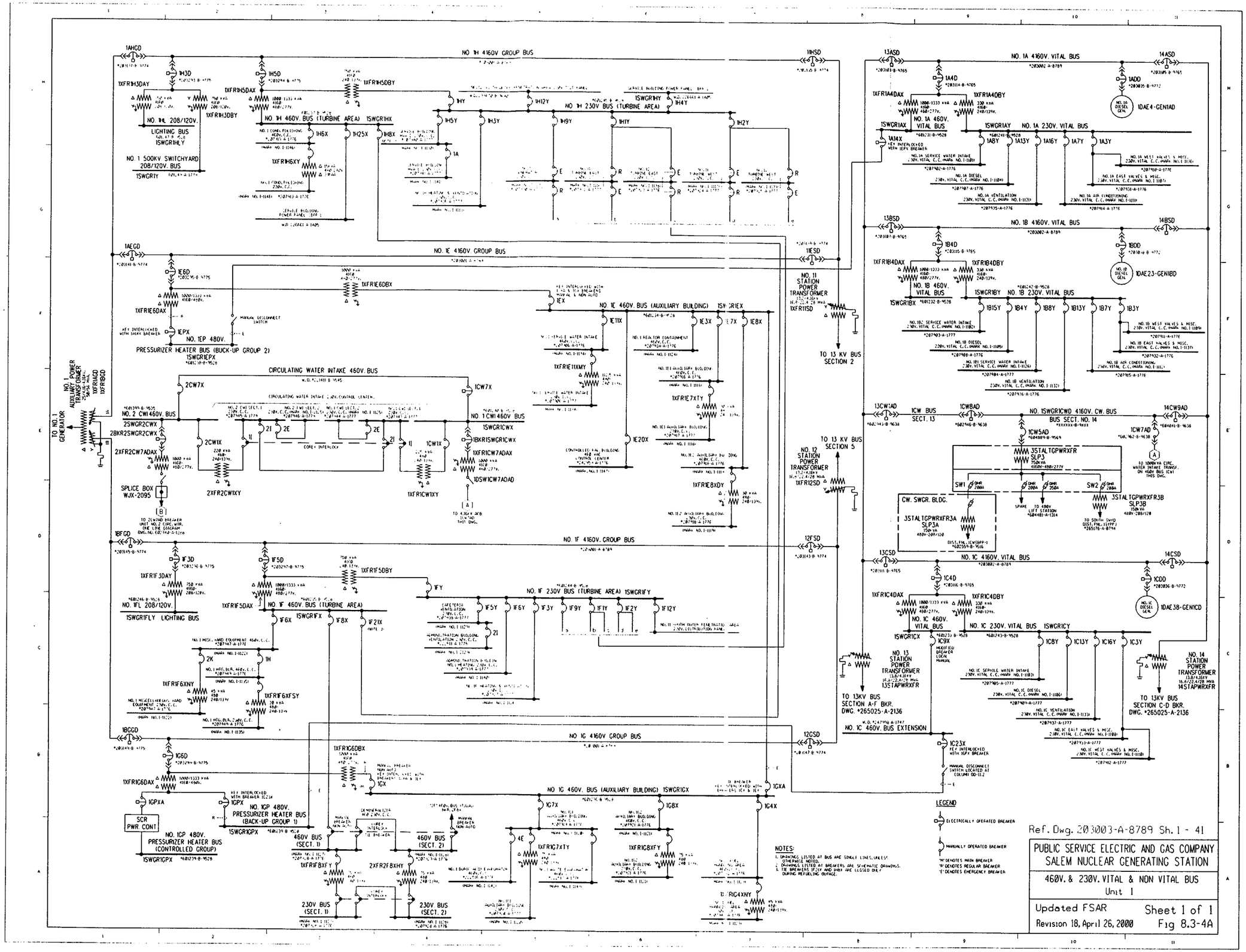
NO. 1H 4160V GROUP BUS
NO. 1H 230V BUS (TURBINE AREA)
NO. 1H 460V. BUS (TURBINE AREA)
NO. 1H 208/120V. LIGHTING BUS
NO. 1 500KV SWITCHYARD 208/120V. BUS
NO. 1E 4160V. GROUP BUS
NO. 1E 460V. BUS (AUXILIARY BUILDING)
NO. 1E 480V. PRESSURIZER HEATER BUS (BUCK-UP GROUP 2)
CIRCULATING WATER INTAKE 460V. BUS
NO. 2 CW1460V. BUS
NO. 1 CW1460V BUS
NO. 1F 4160V. GROUP BUS
NO. 1F 230V BUS (TURBINE AREA)
NO. 1F 460V. BUS (TURBINE AREA)
NO. 1FL 208/120V. LIGHTING BUS
NO. 1G 4160V GROUP BUS
NO. 1G 460V. BUS (AUXILIARY BUILDING)
NO. 1G 480V. PRESSURIZER HEATER BUS (BACK-UP GROUP 1)
NO. 1GP 480V. PRESSURIZER HEATER BUS (CONTROLLED GROUP)
SCR PWR. CONT
NO. 1 AUXILIARY POWER TRANSFORMER
TO NO. 1 GENERATOR
NO. 11 STATION POWER TRANSFORMER
TO 13 KV BUS SECTION 2
NO. 12 STATION POWER TRANSFORMER
TO 13 KV BUS SECTION 5
NO. 1A 4160V. VITAL BUS
NO. 1A 230V. VITAL BUS
NO. 1A 460V. VITAL BUS
NO. 1B 4160V. VITAL BUS
NO. 1B 230V. VITAL BUS
NO. 1B 460V. VITAL BUS
NO. 1SWGR1CWD 4160V. CW. BUS
BUS SECT. NO. 14
CW. SWGR. BLDG.
NO. 1C 4160V. VITAL BUS
NO. 1C 230V. VITAL BUS
NO. 1C 460V. VITAL BUS
NO. 13 STATION POWER TRANSFORMER
TO 13KV BUS SECTION A-F BKR. DWG. *265025-A-2136
NO. 14 STATION POWER TRANSFORMER
TO 13KV BUS SECTION C-D BKR. DWG. *265025-A-2136
NO. 1C 460V. BUS EXTENSION
LEGEND
ELECTRICALLY OPERATED BREAKER
MANUALLY OPERATED BREAKER
NOTES:
1. DRAWINGS LISTED AT BUS ARE SINGLE LINES, UNLESS OTHERWISE NOTED.
2. DRAWINGS LISTED AT BREAKERS ARE SCHEMATIC DRAWINGS.
3. TIE BREAKERS 1F21X AND 1H8X ARE CLOSED ONLY DURING REFUELING OUTAGE.
Ref. Dwg. 203003-A-8789 Sh. 1 - 41
PUBLIC SERVICE ELECTRIC AND GAS COMPANY
SALEM NUCLEAR GENERATING STATION
460V. & 230V. VITAL & NON VITAL BUS
Unit 1
Updated FSAR
Sheet 1 of 1
Revision 18, April 26, 2000
Fig 8.3-4A

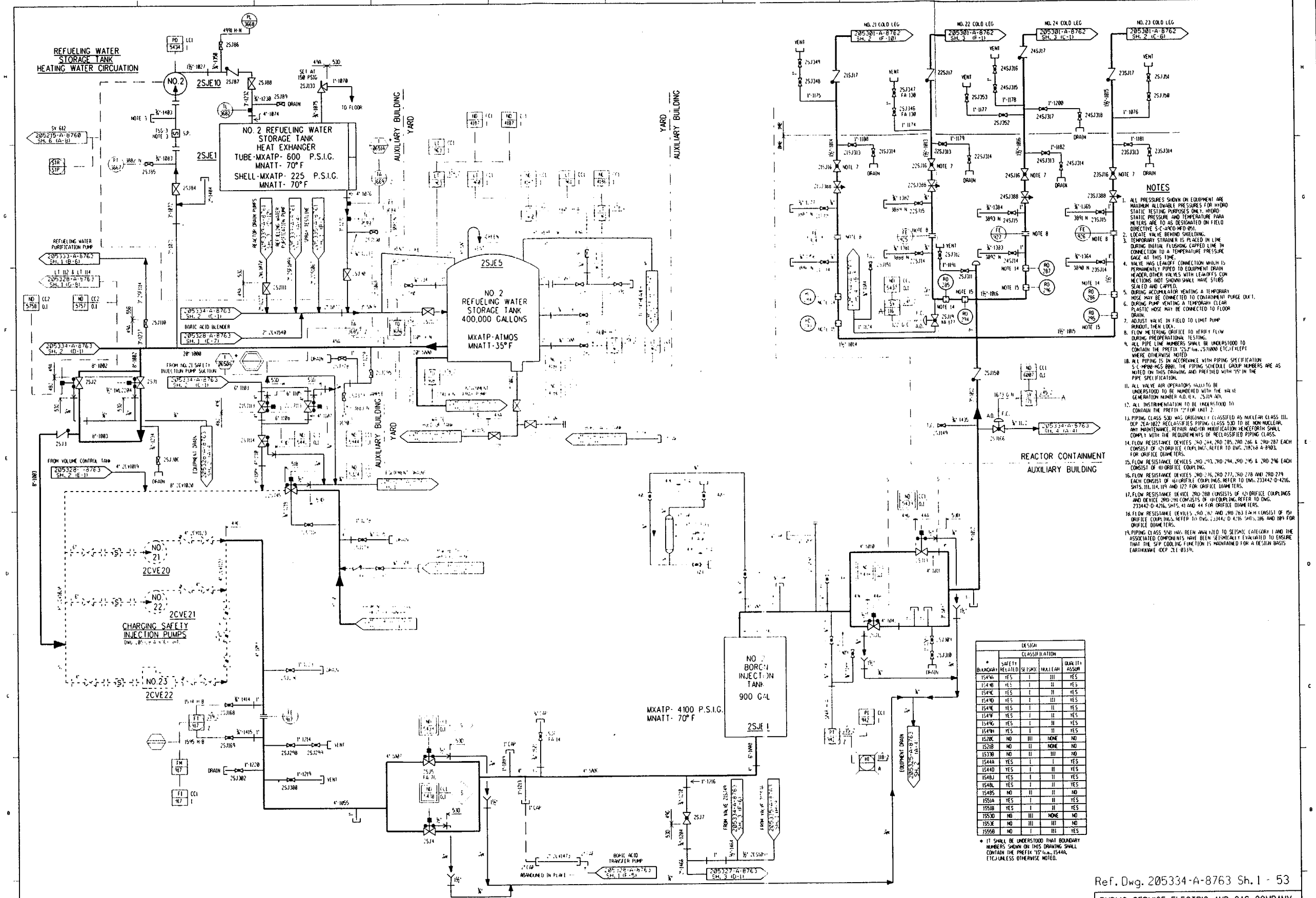

NOTES

1. ALL PRESSURES SHOWN ON EQUIPMENT ARE MAXIMUM ALLOWABLE PRESSURES FOR HYDRO STATIC TESTING PURPOSES ONLY. HYDRO-STATIC PRESSURE AND TEMPERATURE PARA METERS ARE TO AS DESIGNATED ON FIELD DIRECTIVE S-C-ANCO MFD 094.
2. LOCATE VALVE BEHIND SHIELDING.
3. TEMPORARY STRAINER IS PLACED IN LINE DURING INITIAL FLUSHING. CAPPED LINE IN CONNECTION TO A TEMPERATURE PRESSURE GAGE AT THIS TIME.
4. VALVE HAS LEAKOFF CONNECTION WHICH IS PERMANENTLY PIPED TO EQUIPMENT DRAIN HEADER. OTHER VALVES WITH LEAKOFFS CON NECTIONS (NOT SHOWN) SHALL HAVE STUBS SEALED AND CAPPED.
5. DURING ACCUMULATOR VENTING A TEMPORARY HOSE MAY BE CONNECTED TO CONTAINMENT PURGE DUCT.
6. DURING PUMP VENTING A TEMPORARY CLEAR PLASTIC HOSE MAY BE CONNECTED TO FLOOR DRAIN.
7. ADJUST VALVE IN FIELD TO LIMIT PUMP RUNOUT, THEN LOCK.
8. FLOW METERING ORIFICE TO VERIFY FLOW DURING PREOPERATIONAL TESTING.
9. ALL PIPE LINE NUMBERS SHALL BE UNDERSTOOD TO CONTAIN THE PREFIX "22" (i.e., "21N000 ETC.) EXCEPT WHERE OTHERWISE NOTED.
10. ALL PIPING IS IN ACCORDANCE WITH PIPING SPECIFICATION S-C-MPAD-MGS-8001. THE PIPING SCHEDULE GROUP NUMBERS ARE AS NOTED ON THIS DRAWING AND PREFIXED WITH "15" IN THE PIPE SPECIFICATION.
11. ALL VALVE AIR OPERATORS HAVE TO BE UNDERSTOOD TO BE NUMBERED WITH THE VALVE GENERATION NUMBER A.O.(i.e., "2SJ1N A.O.").
12. ALL INSTRUMENTATION TO BE UNDERSTOOD TO CONTAIN THE PREFIX "22" FOR UNIT 2.
13. PIPING CLASS 53D WAS ORIGINALLY CLASSIFIED AS NUCLEAR CLASS III. DCP 2EA-1027 RECLASSIFIES PIPING CLASS 53D TO BE NON-NUCLEAR. ANY MAINTENANCE, REPAIR AND/OR MODIFICATION HENCEFORTH SHALL COMPLY WITH THE REQUIREMENTS OF RECLASSIFIED PIPING CLASS.
14. FLOW RESISTANCE DEVICES 280-284, 280-285, 280-286 & 280-287 EACH CONSIST OF (2) ORIFICE COUPLINGS. REFER TO DWG. 218168 A-8903, FOR ORIFICE DIAMETERS.
15. FLOW RESISTANCE DEVICES 280-293, 280-294, 280-295 & 280-296 EACH CONSIST OF (1) ORIFICE COUPLING.
16. FLOW RESISTANCE DEVICES 280-276, 280-277, 280-278 AND 280-279 EACH CONSIST OF (6) ORIFICE COUPLINGS. REFER TO DWG. 233442-D-4216, SHTS. 111, 114, 119 AND 122 FOR ORIFICE DIAMETERS.
17. FLOW RESISTANCE DEVICE 280-280 CONSISTS OF (2) ORIFICE COUPLINGS AND DEVICE 280-281 CONSISTS OF (4) COUPLING. REFER TO DWG. 233442-D-4216, SHTS. 41 AND 44 FOR ORIFICE DIAMETERS.
18. FLOW RESISTANCE DEVICES 280-262 AND 280-263 EACH CONSIST OF (5) ORIFICE COUPLINGS. REFER TO DWG. 233442-D-4216, SHTS. 186 AND 189 FOR ORIFICE DIAMETERS.
19. PIPING CLASS 53D HAS BEEN ANALYZED TO SEISMIC CATEGORY I AND THE ASSOCIATED COMPONENTS HAVE BEEN SEISMICALLY EVALUATED TO ENSURE THAT THE SIP COOLING FUNCTION IS MAINTAINED FOR A DESIGN BASIS EARTHQUAKE (DCP 2EE-0339).

DESIGN				
* BOUNDARY	CLASSIFICATION: SAFETY RELATED	SEISMIC	NUCLEAR	QUALITY ASSUR
1549A	YES	I	III	YES
1549B	YES	I	II	YES
1549C	YES	I	II	YES
1549D	YES	I	III	YES
1549E	YES	I	II	YES
1549F	YES	I	II	YES
1549G	YES	I	II	YES
1549H	YES	I	II	YES
1520K	NO	III	NONE	NO
1521B	NO	II	NONE	NO
1537B	NO	II	III	NO
1544A	YES	I	I	YES
1544D	YES	I	II	YES
1548J	YES	I	II	YES
1548L	YES	I	II	YES
1548S	NO	II	II	NO
1551A	YES	I	II	YES
1551B	YES	I	II	YES
1553D	NO	III	NONE	NO
1553E	NO	III	III	NO
1556B	NO	I	III	YES

* IT SHALL BE UNDERSTOOD THAT BOUNDARY NUMBERS SHOWN ON THIS DRAWING SHALL CONTAIN THE PREFIX "15" (i.e., 1544A, ETC.) UNLESS OTHERWISE NOTED.

NOTE: FOR VALVE NAMES NOT SHOWN ON THIS SHEET, REFER TO NMS.

Ref. Dwg. 205334-A-8763 Sh. 1 - 53

PUBLIC SERVICE ELECTRIC AND GAS COMPANY
SALEM NUCLEAR GENERATING STATION

Emergency Core Cooling System
Unit 2

Updated FSAR — Sheet 1 of 4

Revision 18, April 26, 2000 — Fig 6.3-1B

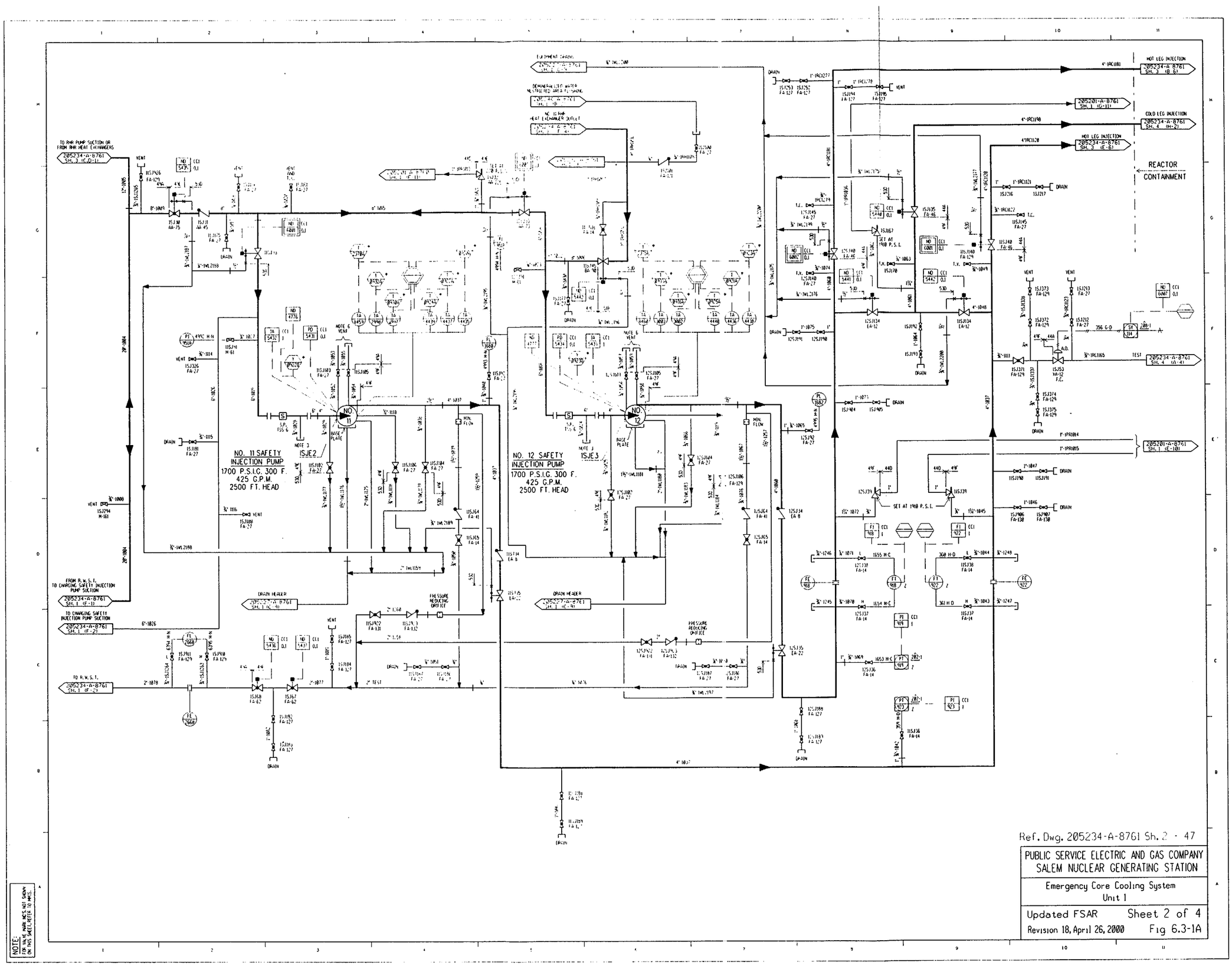

Ref. Dwg. 205234-A-8761 Sh. 2 - 47

PUBLIC SERVICE ELECTRIC AND GAS COMPANY
SALEM NUCLEAR GENERATING STATION

Emergency Core Cooling System
Unit 1

Updated FSAR Sheet 2 of 4
Revision 18, April 26, 2000 Fig 6.3-1A

NOTE: FOR VALVE MARK NOS. NOT SHOWN ON THIS SHEET, REFER TO MMS.

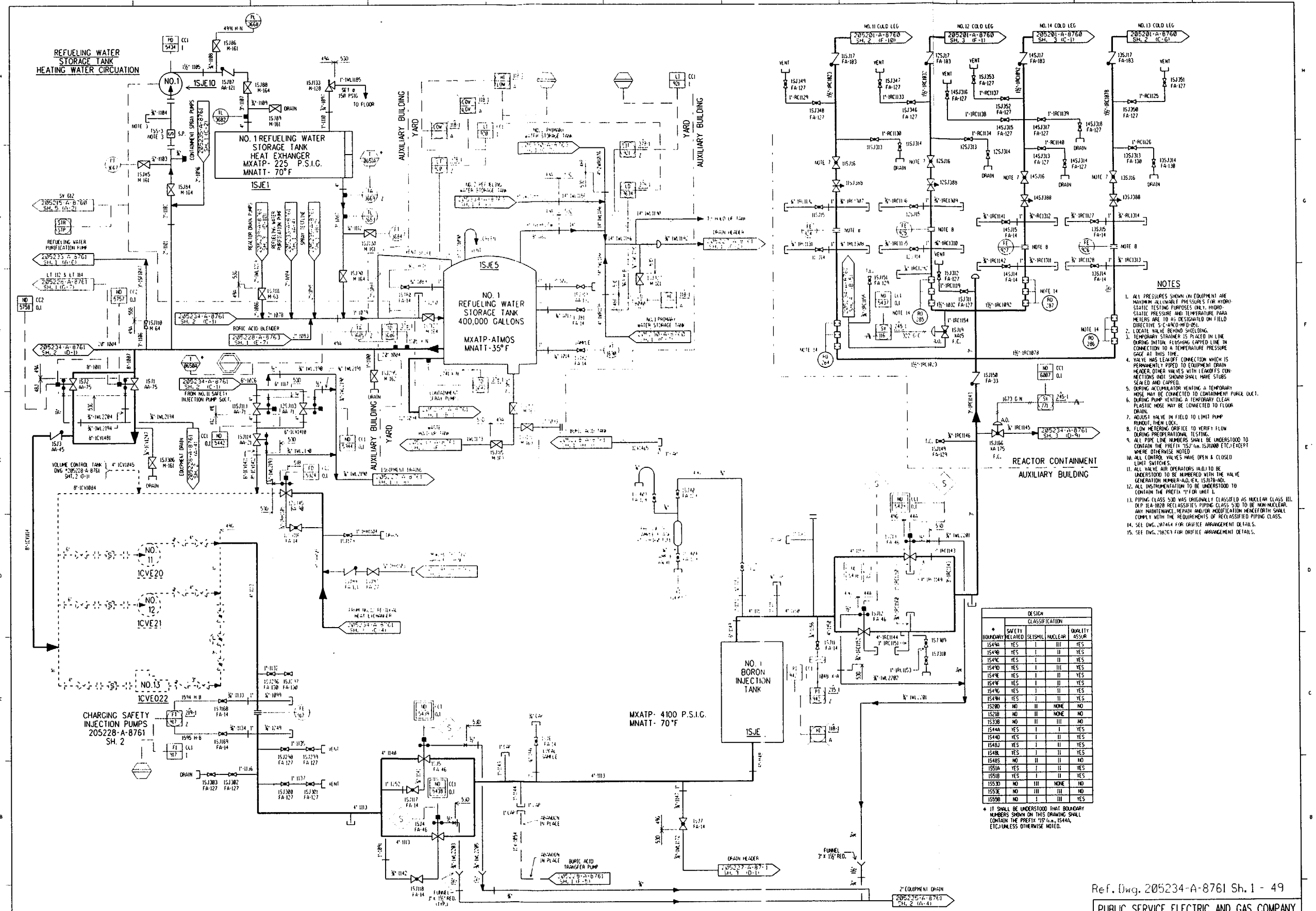

NOTES

1. ALL PRESSURES SHOWN ON EQUIPMENT ARE MAXIMUM ALLOWABLE PRESSURES FOR HYDROSTATIC TESTING PURPOSES ONLY. HYDROSTATIC PRESSURE AND TEMPERATURE PARAMETERS ARE TO AS DESIGNATED ON FIELD DIRECTIVE S-C-8A-0-HYD-001.
2. LOCATE VALVE BEHIND SHIELDING.
3. TEMPORARY STRAINER IS PLACED IN LINE DURING INITIAL FLUSHING. CAPPED LINE IN CONNECTION TO A TEMPERATURE PRESSURE GAGE AT THIS TIME.
4. VALVE HAS LEAKOFF CONNECTION WHICH IS PERMANENTLY PIPED TO EQUIPMENT DRAIN HEADER. OTHER VALVES WITH LEAKOFFS CONNECTIONS (NOT SHOWN) SHALL HAVE STUBS SEALED AND CAPPED.
5. DURING ACCUMULATOR VENTING A TEMPORARY HOSE MAY BE CONNECTED TO CONTAINMENT PURGE DUCT.
6. DURING PUMP VENTING A TEMPORARY CLEAR PLASTIC HOSE MAY BE CONNECTED TO FLOOR DRAIN.
7. ADJUST VALVE IN FIELD TO LIMIT PUMP RUNOUT, THEN LOCK.
8. FLOW METERING ORIFICE TO VERIFY FLOW DURING PREOPERATIONAL TESTING.
9. ALL PIPE LINE NUMBERS SHALL BE UNDERSTOOD TO CONTAIN THE PREFIX "15" (i.e. 15JU000 ETC) EXCEPT WHERE OTHERWISE NOTED
10. ALL CONTROL VALVES HAVE OPEN & CLOSED LIMIT SWITCHES.
11. ALL VALVE AIR OPERATORS (A.O.) TO BE UNDERSTOOD TO BE NUMBERED WITH THE VALVE GENERATION NUMBER-A.O. (E.G. 15J178-A.O.).
12. ALL INSTRUMENTATION TO BE UNDERSTOOD TO CONTAIN THE PREFIX "1" FOR UNIT 1.
13. PIPING CLASS 530 WAS ORIGINALLY CLASSIFIED AS NUCLEAR CLASS III. DCP 1EA-1028 RECLASSIFIES PIPING CLASS 530 TO BE NON-NUCLEAR. ANY MAINTENANCE, REPAIR AND/OR MODIFICATION HENCEFORTH SHALL COMPLY WITH THE REQUIREMENTS OF RECLASSIFIED PIPING CLASS.
14. SEE DWG. 207464 FOR ORIFICE ARRANGEMENT DETAILS.
15. SEE DWG. 218261 FOR ORIFICE ARRANGEMENT DETAILS.

* BOUNDARY	DESIGN CLASSIFICATION: SAFETY RELATED	SEISMIC	NUCLEAR	QUALITY ASSUR
1549A	YES	I	III	YES
1549B	YES	I	II	YES
1549C	YES	I	II	YES
1549D	YES	I	III	YES
1549E	YES	I	II	YES
1549F	YES	I	II	YES
1549G	YES	I	II	YES
1549H	YES	I	II	YES
1520D	NO	II	NONE	NO
1521B	NO	II	NONE	NO
1533B	NO	II	III	NO
1544A	YES	I	I	YES
1544D	YES	I	II	YES
1548J	YES	I	II	YES
1548L	YES	I	II	YES
1548S	NO	II	II	NO
1551A	YES	I	II	YES
1551B	YES	I	II	YES
1553D	NO	III	NONE	NO
1553E	NO	III	III	NO
1559B	NO	I	III	YES

* IT SHALL BE UNDERSTOOD THAT BOUNDARY NUMBERS SHOWN ON THIS DRAWING SHALL CONTAIN THE PREFIX "15" (i.e., 1544A, ETC) UNLESS OTHERWISE NOTED.

Ref. Dwg. 205234-A-8761 Sh. 1 - 49

PUBLIC SERVICE ELECTRIC AND GAS COMPANY
SALEM NUCLEAR GENERATING STATION

Emergency Core Cooling System
Unit 1

Updated FSAR — Sheet 1 of 4
Revision 18, April 26, 2000 — Fig 6.3-1A

NOTE: FOR SYMBOLS NOT SHOWN ON THIS SHEET, REFER TO 1H-1.

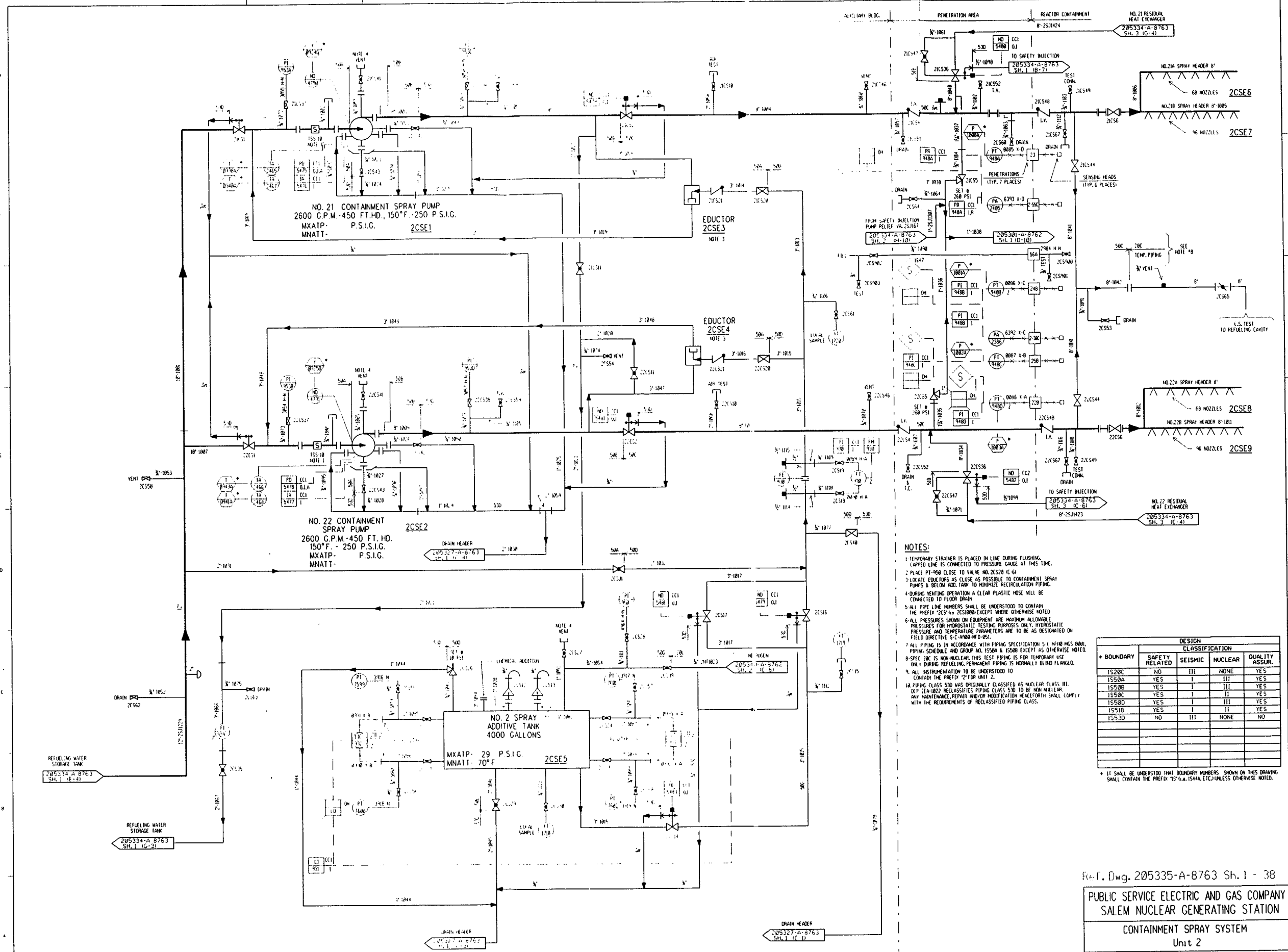

NOTES:

1. TEMPORARY STRAINER IS PLACED IN LINE DURING FLUSHING. CAPPED LINE IS CONNECTED TO PRESSURE GAUGE AT THIS TIME.
2. PLACE PT-958 CLOSE TO VALVE NO. 2CS28 (C-6)
3. LOCATE EDUCTORS AS CLOSE AS POSSIBLE TO CONTAINMENT SPRAY PUMPS & BELOW ADD. TANK TO MINIMIZE RECIRCULATION PIPING.
4. DURING VENTING OPERATION A CLEAR PLASTIC HOSE WILL BE CONNECTED TO FLOOR DRAIN
5. ALL PIPE LINE NUMBERS SHALL BE UNDERSTOOD TO CONTAIN THE PREFIX "2CS" (i.e. 2CS1000) EXCEPT WHERE OTHERWISE NOTED
6. ALL PRESSURES SHOWN ON EQUIPMENT ARE MAXIMUM ALLOWABLE PRESSURES FOR HYDROSTATIC TESTING PURPOSES ONLY. HYDROSTATIC PRESSURE AND TEMPERATURE PARAMETERS ARE TO BE AS DESIGNATED ON FIELD DIRECTIVE S-C-A900-MFD-051.
7. ALL PIPING IS IN ACCORDANCE WITH PIPING SPECIFICATION S-C-M900-MGS-0001, PIPING SCHEDULE AND GROUP NO. 1550A & 1550B EXCEPT AS OTHERWISE NOTED.
8. SPEC 20C IS NON-NUCLEAR. THIS TEST PIPING IS FOR TEMPORARY USE ONLY DURING REFUELING. PERMANENT PIPING IS NORMALLY BLIND FLANGED.
9. ALL INSTRUMENTATION TO BE UNDERSTOOD TO CONTAIN THE PREFIX "2" FOR UNIT 2.
10. PIPING CLASS 530 WAS ORIGINALLY CLASSIFIED AS NUCLEAR CLASS III. DCP 2EA-1022 RECLASSIFIES PIPING CLASS 530 TO BE NON-NUCLEAR. ANY MAINTENANCE, REPAIR AND/OR MODIFICATION HENCEFORTH SHALL COMPLY WITH THE REQUIREMENTS OF RECLASSIFIED PIPING CLASS.

DESIGN				
	CLASSIFICATION			
* BOUNDARY	SAFETY RELATED	SEISMIC	NUCLEAR	QUALITY ASSUR.
1S20C	NO	III	NONE	YES
1S50A	YES	I	III	YES
1S50B	YES	I	III	YES
1S50C	YES	I	II	YES
1S50D	YES	I	III	YES
1S51B	YES	I	II	YES
1S53D	NO	III	NONE	NO

* IT SHALL BE UNDERSTOOD THAT BOUNDARY NUMBERS SHOWN ON THIS DRAWING SHALL CONTAIN THE PREFIX "1S" (i.e. 1S44A, ETC.) UNLESS OTHERWISE NOTED.

Ref. Dwg. 205335-A-8763 Sh. 1 - 38

PUBLIC SERVICE ELECTRIC AND GAS COMPANY
SALEM NUCLEAR GENERATING STATION

CONTAINMENT SPRAY SYSTEM
Unit 2

Updated FSAR
Revision 18, April 26, 2000

Sheet 1 of 1
Fig 6.2-4B

NOTE: FOR VALVE MARK NOS. NOT SHOWN ON THIS SHEET, REFER TO MMIS.

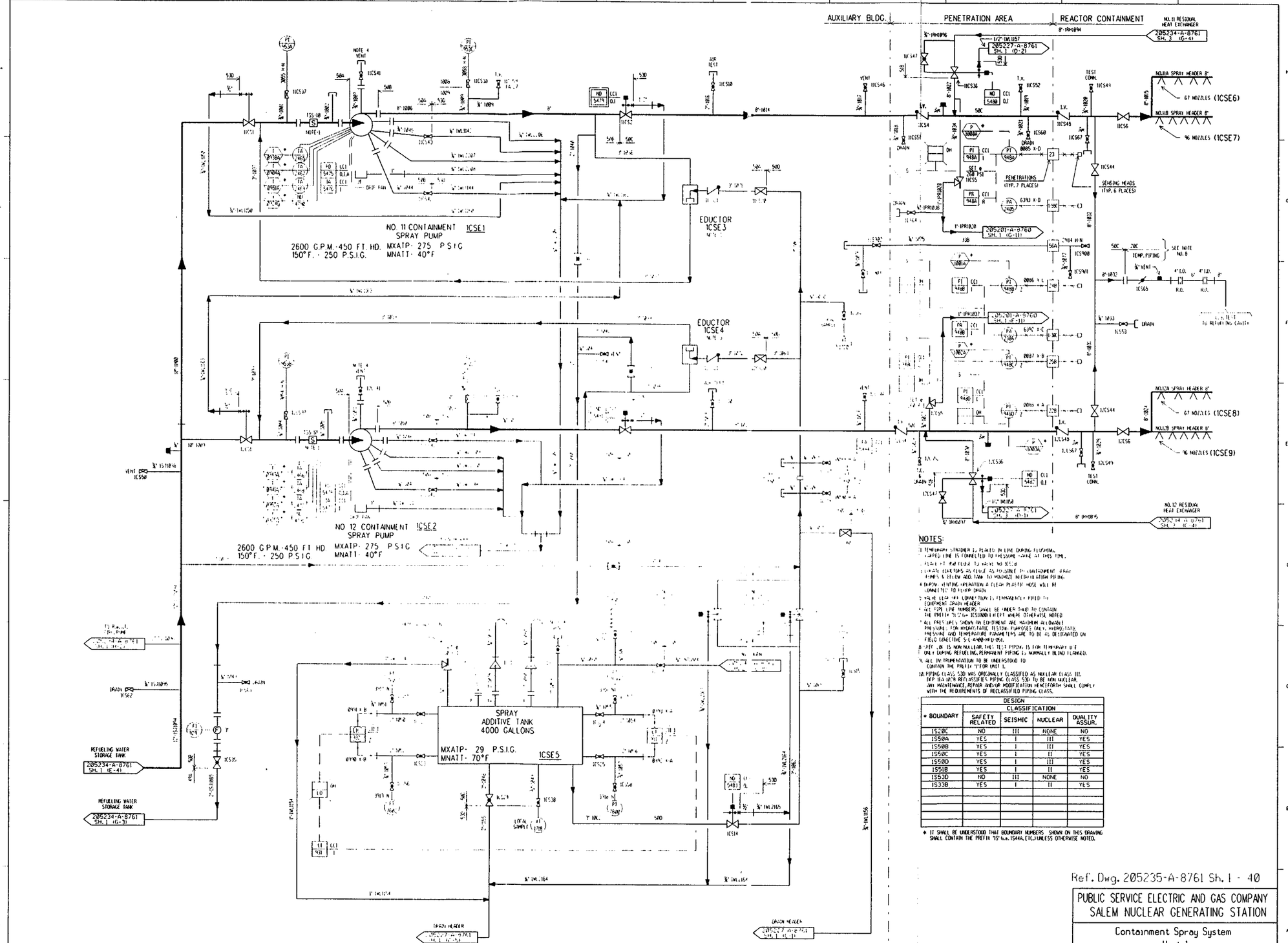

NOTES:

1. TEMPORARY STRAINER IS PLACED IN LINE DURING FLUSHING. CAPPED LINE IS CONNECTED TO PRESSURE GAUGE AT THIS TIME.
2. RESERVED FOR FUTURE USE WITH NO NOTE #
3. LOCATE ELBOWS AS CLOSE AS POSSIBLE TO CONTAINMENT DRAIN HEADER & BELOW ADJACENT TO MAXIMIZE RECIRCULATION PIPING.
4. DURING VENTING OPERATION A CLEAR PLASTIC HOSE WILL BE CONNECTED TO FLOOR DRAIN.
5. VALVE LEAK OFF CONNECTIONS PERMANENTLY PIPED TO EQUIPMENT DRAIN HEADER.
6. ALL PIPE LINE NUMBERS SHALL BE UNDER THIS TO CONTAIN THE PREFIX "25" (i.e. 1CS500B) EXCEPT WHERE OTHERWISE NOTED.
7. ALL PRESSURES SHOWN ON EQUIPMENT ARE MAXIMUM ALLOWABLE PRESSURE FOR HYDROSTATIC TESTING PURPOSES ONLY. HYDROSTATIC PRESSURE AND TEMPERATURE PARAMETERS ARE TO BE AS DESIGNATED ON FIELD DIRECTIVE S.C. A-900-HYD-004.
8. SEE NOTE 10 IS NON NUCLEAR. THIS TEST PIPING IS FOR TEMPORARY USE ONLY DURING REFUELING. PERMANENT PIPING IS NORMALLY BLIND FLANGED.
9. ALL INSTRUMENTATION TO BE UNDERSTOOD TO CONTAIN THE PREFIX "1" FOR UNIT 1.
10. PIPING CLASS 530 WAS ORIGINALLY CLASSIFIED AS NUCLEAR CLASS III. TEP 10A-0078 RECLASSIFIES PIPING CLASS 530 TO BE NON NUCLEAR. ANY MAINTENANCE, REPAIR AND/OR MODIFICATION HENCEFORTH SHALL COMPLY WITH THE REQUIREMENTS OF RECLASSIFIED PIPING CLASS.

* BOUNDARY	DESIGN CLASSIFICATION			
	SAFETY RELATED	SEISMIC	NUCLEAR	QUALITY ASSUR.
1520C	NO	III	NONE	NO
1550A	YES	I	III	YES
1550B	YES	I	III	YES
1550C	YES	I	II	YES
1550D	YES	I	II	YES
1551B	YES	I	II	YES
1553D	NO	III	NONE	NO
1533B	YES	I	II	YES

* IT SHALL BE UNDERSTOOD THAT BOUNDARY NUMBERS SHOWN ON THIS DRAWING SHALL CONTAIN THE PREFIX "15" (i.e. 1544A, ETC.) UNLESS OTHERWISE NOTED.

Ref. Dwg. 205235-A-8761 Sh. 1 - 40

PUBLIC SERVICE ELECTRIC AND GAS COMPANY
SALEM NUCLEAR GENERATING STATION

Containment Spray System
Unit 1

Updated FSAR — Sheet 1 of 1
Revision 18, April 26, 2000 — Fig 6.2-4A

NOTE: TO THE NUMBER NOT SHOWN ON THIS SHEET, REFER TO NMSS.

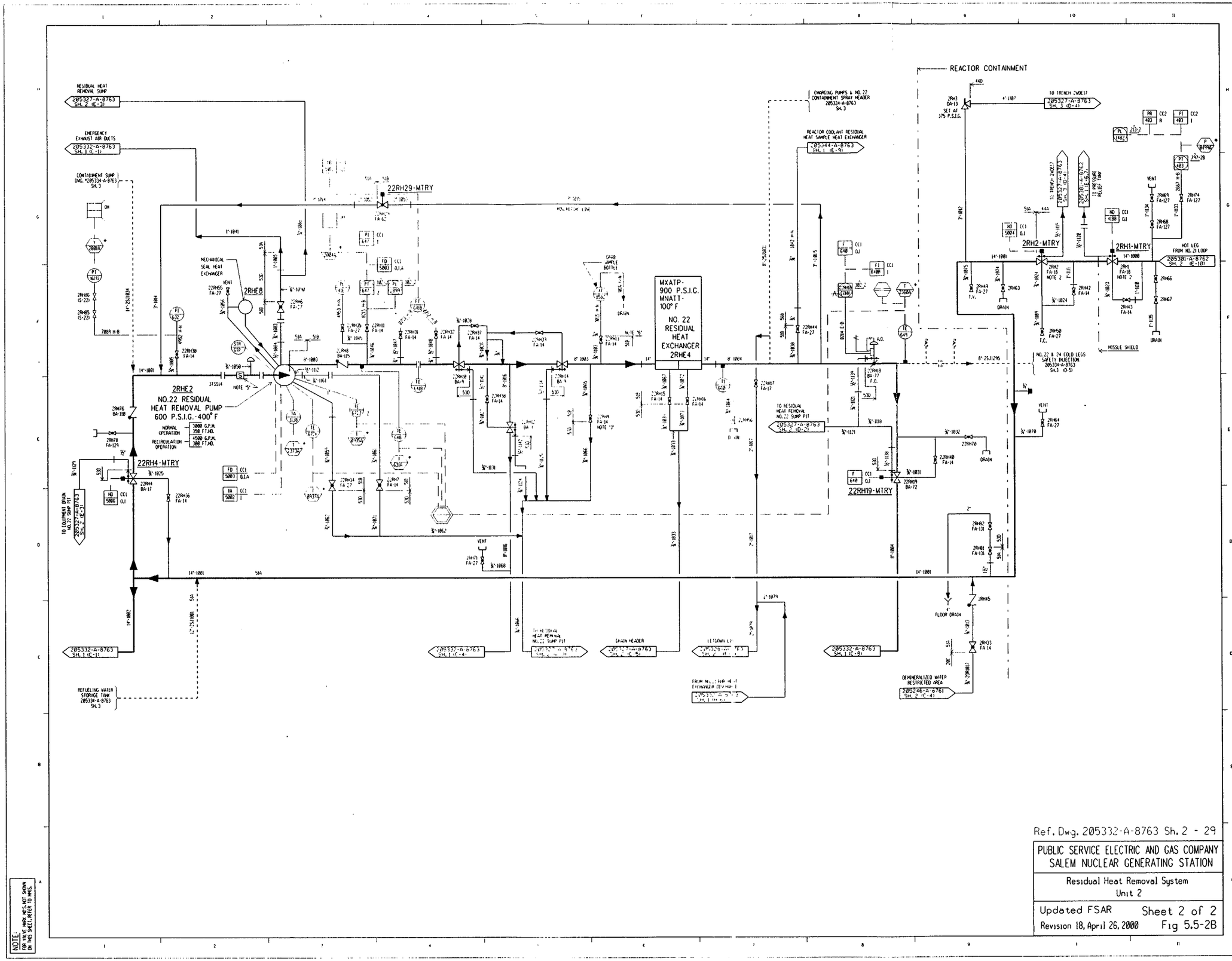

Ref. Dwg. 205332-A-8763 Sh. 2 - 29

PUBLIC SERVICE ELECTRIC AND GAS COMPANY
SALEM NUCLEAR GENERATING STATION

Residual Heat Removal System
Unit 2

Updated FSAR Sheet 2 of 2
Revision 18, April 26, 2000 Fig 5.5-2B

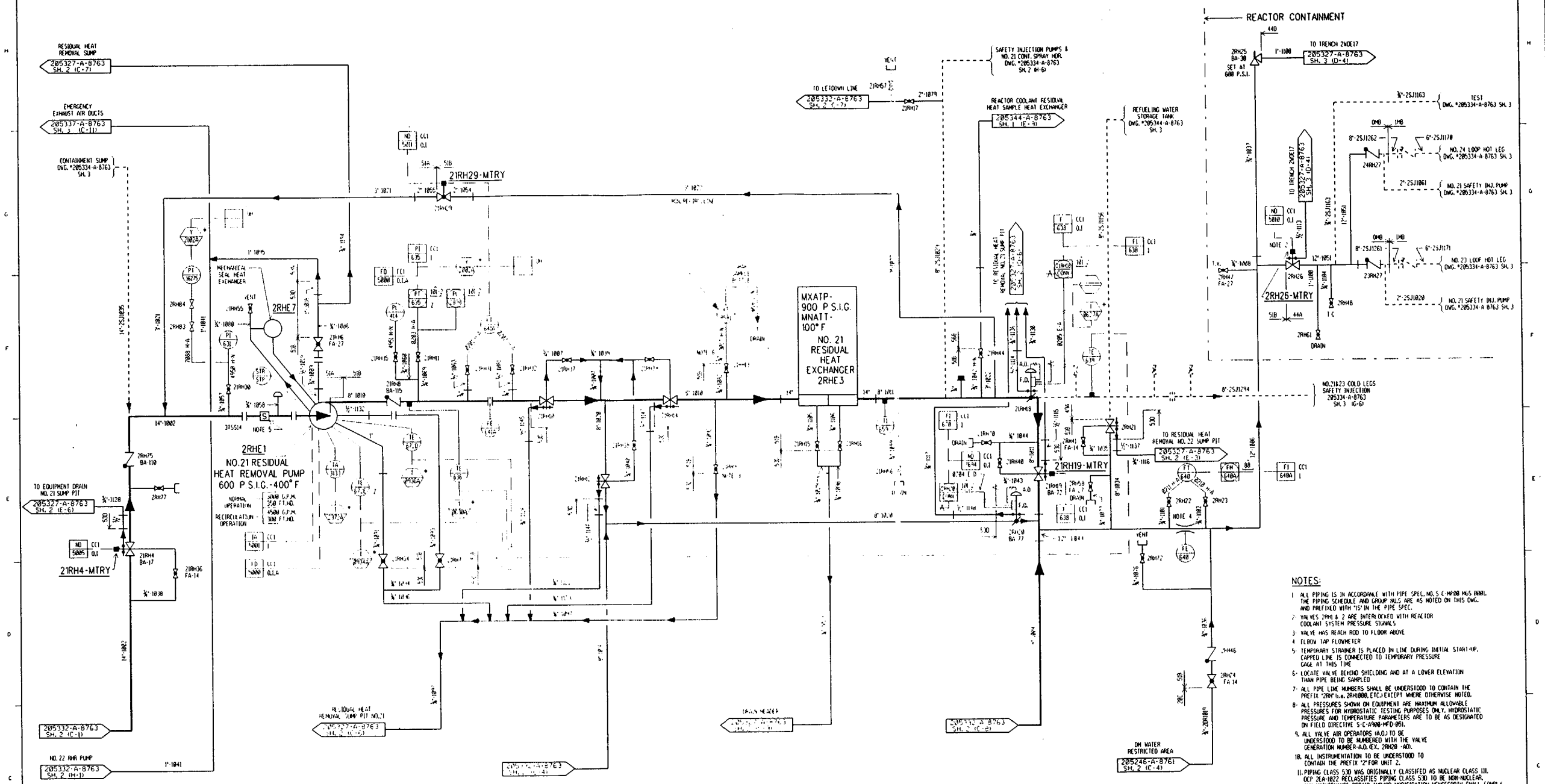

BOUNDARY*	DESIGN CLASSIFICATION			
	SAFETY RELATED	SEISMIC	NUCLEAR	QUALITY ASSUR.
1528C	NO	III	NONE	NO
1544A	YES	I	I	YES
1544D	YES	I	II	YES
1549A	YES	I	III	YES
1551A	YES	I	II	YES
1551B	YES	I	II	YES
1553D	NO	III	NONE	NO
1553N	NO	III	III	NO
1556B	NO	II	III	NO

* IT SHALL BE UNDERSTOOD THAT BOUNDARY NUMBERS SHOWN ON THIS DRAWING SHALL CONTAIN THE PREFIX "15" (i.e. 15444, ETC.) UNLESS OTHERWISE NOTED.

NOTES:

1. ALL PIPING IS IN ACCORDANCE WITH PIPE SPEC. NO. S-C-HP08-MQS-0001. THE PIPING SCHEDULE AND GROUP NOS ARE AS NOTED ON THIS DWG. AND PREFIXED WITH "15" IN THE PIPE SPEC.
2. VALVES 2RH1 & 2 ARE INTERLOCKED WITH REACTOR COOLANT SYSTEM PRESSURE SIGNALS.
3. VALVE HAS REACH ROD TO FLOOR ABOVE
4. ELBOW TAP FLOWMETER
5. TEMPORARY STRAINER IS PLACED IN LINE DURING INITIAL STARTUP. CAPPED LINE IS CONNECTED TO TEMPORARY PRESSURE GAGE AT THIS TIME
6. LOCATE VALVE BEHIND SHIELDING AND AT A LOWER ELEVATION THAN PIPE BEING SAMPLED
7. ALL PIPE LINE NUMBERS SHALL BE UNDERSTOOD TO CONTAIN THE PREFIX "2RH" (i.e. 2RH1000, ETC.) EXCEPT WHERE OTHERWISE NOTED.
8. ALL PRESSURES SHOWN ON EQUIPMENT ARE MAXIMUM ALLOWABLE PRESSURES FOR HYDROSTATIC TESTING PURPOSES ONLY. HYDROSTATIC PRESSURE AND TEMPERATURE PARAMETERS ARE TO BE AS DESIGNATED ON FIELD DIRECTIVE S-C-RH08-MFD-0151.
9. ALL VALVE AIR OPERATORS (AO) TO BE UNDERSTOOD TO BE NUMBERED WITH THE VALVE GENERATION NUMBER-AO. (EX. 2RH28-AO).
10. ALL INSTRUMENTATION TO BE UNDERSTOOD TO CONTAIN THE PREFIX "2" FOR UNIT 2.
11. PIPING CLASS 530 WAS ORIGINALLY CLASSIFIED AS NUCLEAR CLASS III. DCP 2EA-1022 RECLASSIFIES PIPING CLASS 530 TO BE NON-NUCLEAR. ANY MAINTENANCE, REPAIR AND/OR MODIFICATION HENCEFORTH SHALL COMPLY WITH THE REQUIREMENTS OF RECLASSIFIED PIPING CLASS.

Ref. Dwg. 205332-A-8763 Sh. 1 - 30

PUBLIC SERVICE ELECTRIC AND GAS COMPANY
SALEM NUCLEAR GENERATING STATION

Residual Heat Removal System
Unit 2

Updated FSAR — Sheet 1 of 2
Revision 18, April 26, 2000 — Fig 5.5-2B

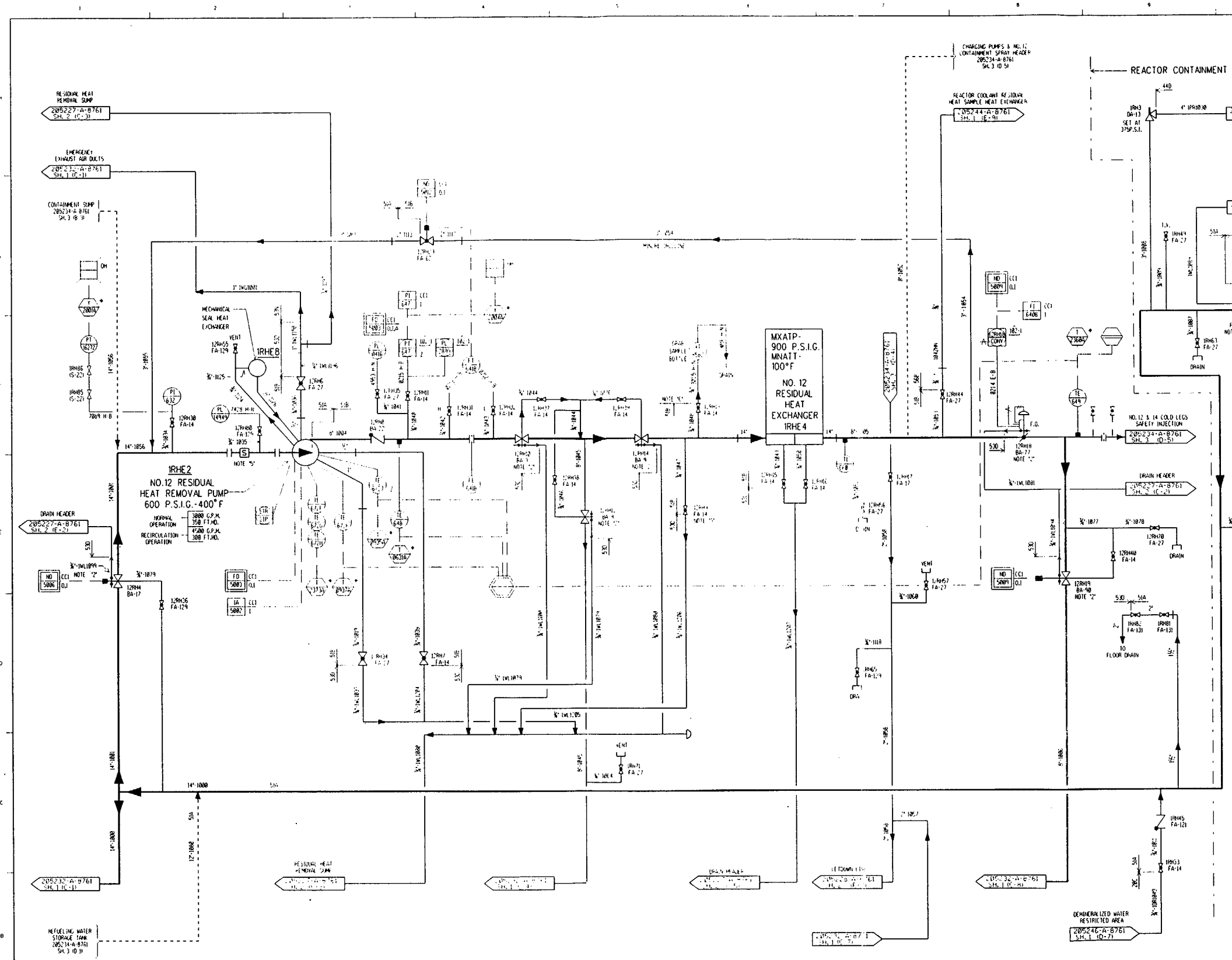

Ref. Dwg. 205232-A-8761 Sh. 2 - 35

PUBLIC SERVICE ELECTRIC AND GAS COMPANY SALEM NUCLEAR GENERATING STATION
Residual Heat Removal System Unit 1
Updated FSAR Sheet 2 of 2 Revision 18, April 26, 2000 Fig 5.5-2A

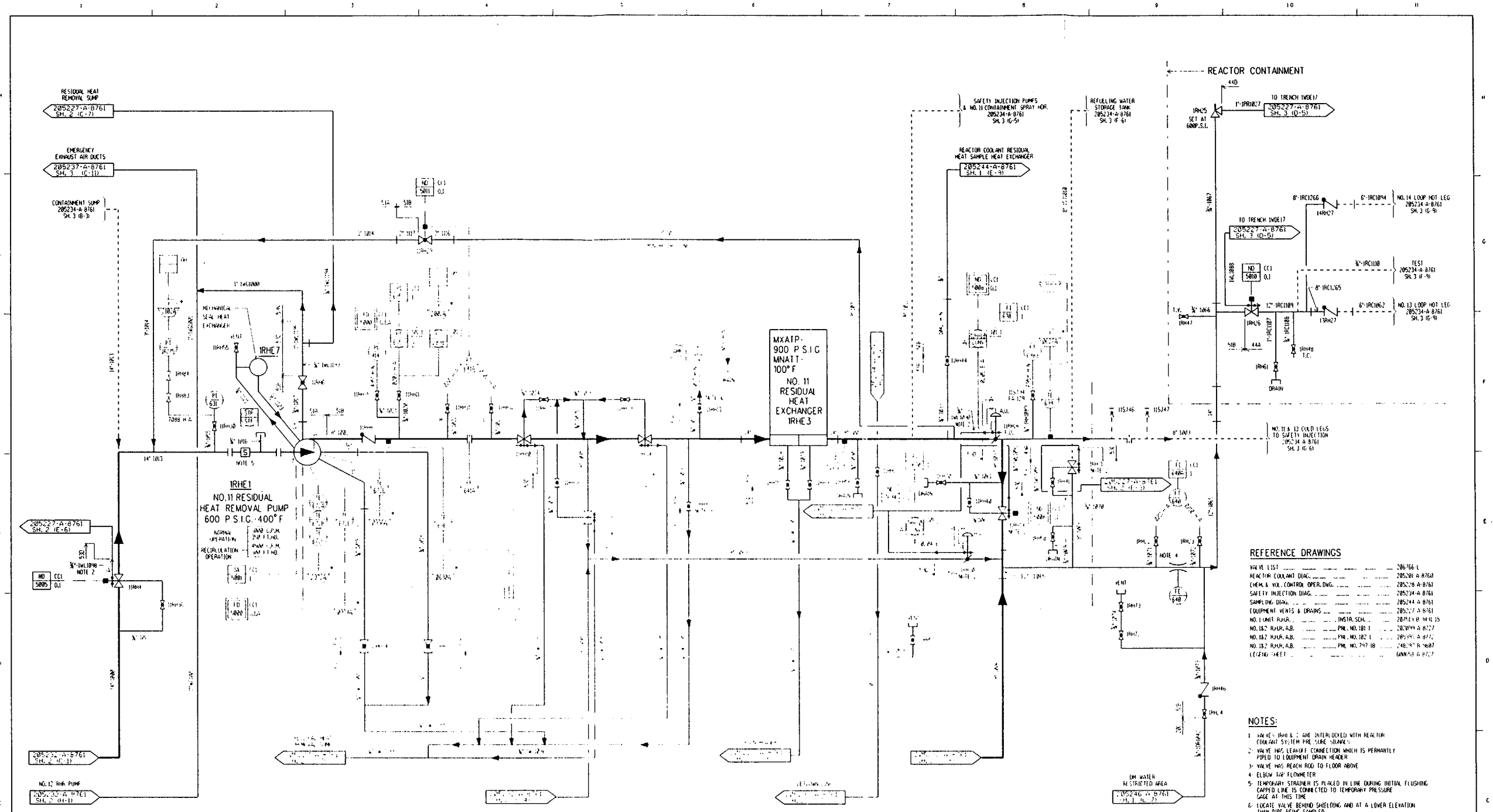

REFERENCE DRAWINGS

VALVE LIST	286768-L
REACTOR COOLANT DIAG.	205201 A-8761
CHEM. & VOL. CONTROL OPER. DWG.	205228 A-8761
SAFETY INJECTION DIAG.	205234-A-8761
SAMPLING DIAG.	205244 A-8761
EQUIPMENT VENTS & DRAINS	205227 A-8761
NO. 1 UNIT RHR.	INSTR. SCH.
NO. 1&2 RHR. A.B.	PNL. NO. 1B1 1
NO. 1&2 RHR. A.B.	PNL. NO. 1B2 1
NO. 1&2 RHR. A.B.	PNL. NO. 247-1B
LEGEND SHEET	

NOTES:

1. VALVES 1RH1 & 2 ARE INTERLOCKED WITH REACTOR COOLANT SYSTEM PRESSURE SIGNALS.
2. VALVE HAS LEAKOFF CONNECTION WHICH IS PERMANENTLY PIPED TO EQUIPMENT DRAIN HEADER
3. VALVE HAS REACH ROD TO FLOOR ABOVE
4. ELBOW TAP FLOWMETER
5. TEMPORARY STRAINER IS PLACED IN LINE DURING INITIAL FLUSHING CAPPED LINE IS CONNECTED TO TEMPORARY PRESSURE GAGE AT THIS TIME
6. LOCATE VALVE BEHIND SHIELDING AND AT A LOWER ELEVATION THAN PIPE BEING SAMPLED
7. ALL PIPE LINE NUMBERS SHALL BE UNDERSTOOD TO CONTAIN THE PREFIX "1RH" (i.e. 1RH600BL.ETC) (EXCEPT WHERE OTHERWISE NOTED.
8. ALL PRESSURES SHOWN ON EQUIPMENT ARE MAXIMUM ALLOWABLE PRESSURES FOR HYDROSTATIC TESTING PURPOSES ONLY. HYDROSTATIC PRESSURE AND TEMPERATURE PARAMETERS ARE TO BE AS DESIGNATED ON FIELD DIRECTIVE S-C-4N08-MFD-056.
9. ALL CONTROL VALVES TO HAVE OPEN & CLOSED LIMIT SWITCHES.
10. ALL VALVE AIR OPERATORS (AOU) TO BE UNDERSTOOD TO BE NUMBERED WITH THE VALVE GENERATION NUMBER-A.O. (EX. 1RH18-AO).
11. ALL INSTRUMENTATION TO BE UNDERSTOOD TO CONTAIN THE PREFIX "1" FOR UNIT 1.
12. PIPING CLASS 53D WAS ORIGINALLY CLASSIFIED AS NUCLEAR CLASS III. DCP 1EA-1028 RECLASSIFIES PIPING CLASS 53D TO BE NON-NUCLEAR. ANY MAINTENANCE, REPAIR AND/OR MODIFICATION HENCEFORTH SHALL COMPLY WITH THE REQUIREMENTS OF RECLASSIFIED PIPING CLASS.

BOUNDARY	DESIGN CLASSIFICATION			
	SAFETY RELATED	SEISMIC	NUCLEAR	QUALITY ASSUR.
1SJ70L	NO	III	NONE	NO
1SJ44A	YES	I	I	YES
1SJ44D	YES	I	II	YES
1SJ47A	YES	I	III	YES
1SJ51A	YES	I	II	YES
1SJ51B	YES	I	II	YES
1SJ53D	NO	III	NONE	NO
1SE39A	NO	III	III	NO
1SE60B	NO	II	III	NO

IT SHALL BE UNDERSTOOD THAT VALVE NUMBERS SHOWN ON THIS DRAWING SHALL CONTAIN THE PREFIX "1" (i.e. 1-SJ-47C) UNLESS OTHERWISE NOTED.

NOTE: DRAWING MARK-UPS NOT SHOWN ON THIS SHEET. REFER TO 1HRIS.

Ref. Dwg. 205232-A-8761 Sh. 1 - 36

PUBLIC SERVICE ELECTRIC AND GAS COMPANY
SALEM NUCLEAR GENERATING STATION

Residual Heat Removal System
Unit 1

Updated FSAR — Sheet 1 of 2
Revision 18, April 26, 2000 — Fig 5.5-2A

TABLE 5.2-25

LIMIT ANALYSIS CALCULATION RESULTS

TABLE OF STRAINS, LIMIT PRESSURES, AND FATIGUE EVALUATIONS FOR 51,500 SQ. FT. STEAM GENERATORS

UNIT 2 - SERIES 51 SG

Case	Location	Meridional Strain, In/In	Circum-ferential Strain, In/In	Peak Stress Intensity, Psi	Allowable Number of Cycles, N_1	Number of Cycles, N_2	Usage Factor N_2/N_1	Limit Pressure Psi
Hot	Channel/Primary Shell	0.188	-.000559	508,000	46	10	.22	
2500/0 PSI	Tubesheet/Secondary Shell	-.00193	.000602	83,700	5,000	10	.0020	3,158
650°F	Tubesheet Center	.00159	.00159	77,400	6,600	10	.0015	
Cold Hydro.	Tubesheet/Primary Shell	.0145	-.000537	434,000	80	5	.053	
3105/0 PSI	Tubesheet/Secondary Shell	-.00220	.000684	10-6,000	3,500	5	.0014	3,887
70°F	Tubesheet Center	.00177	.00177	95,400	5,000	5	.0010	
Cold Hydro With Secondary Pressure 3105/700 PSI 70°F	Tubesheet/Primary Shell	.00730	-.00348	218,000	500	5	.0001	4,401
	Tubesheet/Secondary Shell	-.000962	.000560	50,700	40,000	5	.0001	4,401
	Tubesheet Center	.00147	.00147	79,000	8,000	5	.005	
Hot Hydro	Tubesheet/Primary Shell	.00777	-.000407	222,000	400	50	.13	
2485/0 PSI	Tubesheet/Secondary Shell	-.00176	.000551	80,900	7,000	50	.0071	3,354
400°F	Tubesheet Center	.00148	.00148	76,300	8,500	50	.0059	

TABLE 5.2-23

51,500 SQ. FT. STEAM GENERATOR
USAGE FACTORS (INDIVIDUAL TRANSIENT)

UNIT 2 - SERIES 51 SG

CENTER OF TUBE SHEET

			Primary Inlet Angle								Primary Inlet Angle							Secondary Inlet Angle							Secondary Inlet Angle					
No.	Transient	No. of Cycles	0°	15°	30°	45°	60°	75°	90°	0°	15°	30°	45°	60°	75°	90°	0°	15°	30°	45°	60°	75°	90°	0°	15°	30°	45°	60°	75°	90°
1.	Heatup-Cooldown	200	0	0	0	0	0	0	0	0	0	0	0	0	0	0	0	0	0	0	0	0	0	0	0	0	0	0	0	0
2.	Loading-Unloading	18,300	0	0	0	0	0	0	0	0	0	0	0	0	0	0	0	0	0	0	0	0	0	0	0	0	0	0	0	0
3.	Small Step Increase	2,000	0	0	0	0	0	0	0	0	0	0	0	0	0	0	0	0	0	0	0	0	0	0	0	0	0	0	0	0
4.	Small Step Decrease	2,000	0	0	0	0	0	0	0	0	0	0	0	0	0	0	0	0	0	0	0	0	0	0	0	0	0	0	0	0
5.	Large Step Decrease	200	0	0	0	0	0	0	0	0	0	0	0	0	0	0	0	0	0	0	0	0	0	0	0	0	0	0	0	0
6.	Loss of Load	80	0	0	0	0	0	0	0	0	0	0	0	0	0	0	0	0	0	0	0	0	0	0	0	0	0	0	0	0
7.	Loss of Power	40	0	0	0	0	0	0	0	0	0	0	0	0	0	0	0	0	0	0	0	0	0	0	0	0	0	0	0	0
8.	Loss of Flow	80	0	0	0	0	0	0	0	0	0	0	0	0	0	0	0	0	0	0	0	0	0	0	0	0	0	0	0	0
9.	Reactor Trip	400	0	0	0	0	0	0	0	0	0	0	0	0	0	0	0	0	0	0	0	0	0	0	0	0	0	0	0	0
10.	React. Cool. Pipe Break	1	0	0	0	0	0	0	0	0	0	0	0	0	0	0	0	0	0	0	0	0	0	0	0	0	0	0	0	0
11.	Steam Line Break	1	0	0	0	0	0	0	0	0	0	0	0	0	0	0	0	0	0	0	0	0	0	0	0	0	0	0	0	0

TABLE 5.2-22

51,500 SQ. FT. STEAM GENERATOR
USAGE FACTORS (INDIVIDUAL TRANSIENTS)
PRIMARY AND SECONDARY BOUNDARY COMPONENTS

UNIT 2 - SERIES 51 SG

			Junction of Head and Tubesheet and Divider Plate																			Unperforated Outer Ring				Junction of Shell to Tube Sheet	
			In Tubesheet						On Tubesheet Face																		
			Inlet			Outlet			Inlet			Outlet			Inhead Inlet			Outlet				Prim.		Sec.			
No.	Transient	No. of Cycles	SARS*	SASH	SRSH	SASR	SASH	SRSH	SASR	SASH	SRSH	SASR	SASH	SRSH	SASR	SASH	SRSH	SASR	SASH	SRSH	Inlet	Outlet	Inlet	Outlet	HAHH	HAHR	HHHR
1	Heatup-Cooldown	200	.008	.01	0	.008	.01	0	0	0	0	0	0	0	.009	.003	0	.009	.003	0	0	0	0	00	0	0	0
2	Loading-Unloading	18,300	0	0	0	0	0	0	0	0	0	0	0	0	0	0	0	0	0	0	0	0	0	.019	.082	.056	0
3	Small Step Increase	2,000	0	0	0	0	0	0	0	0	0	0	0	0	0	0	0	0	0	0	0	0	0	0	0	0	0
4	Small Step Decrease	2,000	0	0	0	0	0	0	0	0	0	0	0	0	0	0	0	0	0	0	0	0	0	0	0	0	0
5	Large Step Decrease	200	0	0	0	0	0	0	0	0	0	0	0	0	0	0	0	0	0	0	0	0	0	0	.002	.001	0
6	Loss of Load	80	0	0	0	0	0	0	0	0	0	0	0	0	0	0	0	.001	.001	0	0	0	.001	.002	.006	.005	0
7	Loss of Power	40	0	0	0	0	0	0	0	0	0	0	0	0	0	0	0	0	0	0	0	0	0	0	0	0	0
8	Loss of Flow	80	.008	.009	0	.008	.016	0	0	0	0	0	0	0	.011	.003	.001	.012	.006	0	0	0	.002	.004	.002	.002	0
9	Reactor Trip	400	0	0	0	0	.001	0	0	0	0	0	0	0	00	0	0	0	0	0	0	0	.001	.005	.012	.008	0
10	React. Cool Pipe Break	1	0	0	0	0	0	0	0	0	0	0	0	0	0	0	0	0	0	0	0	0	0	0	0	0	0

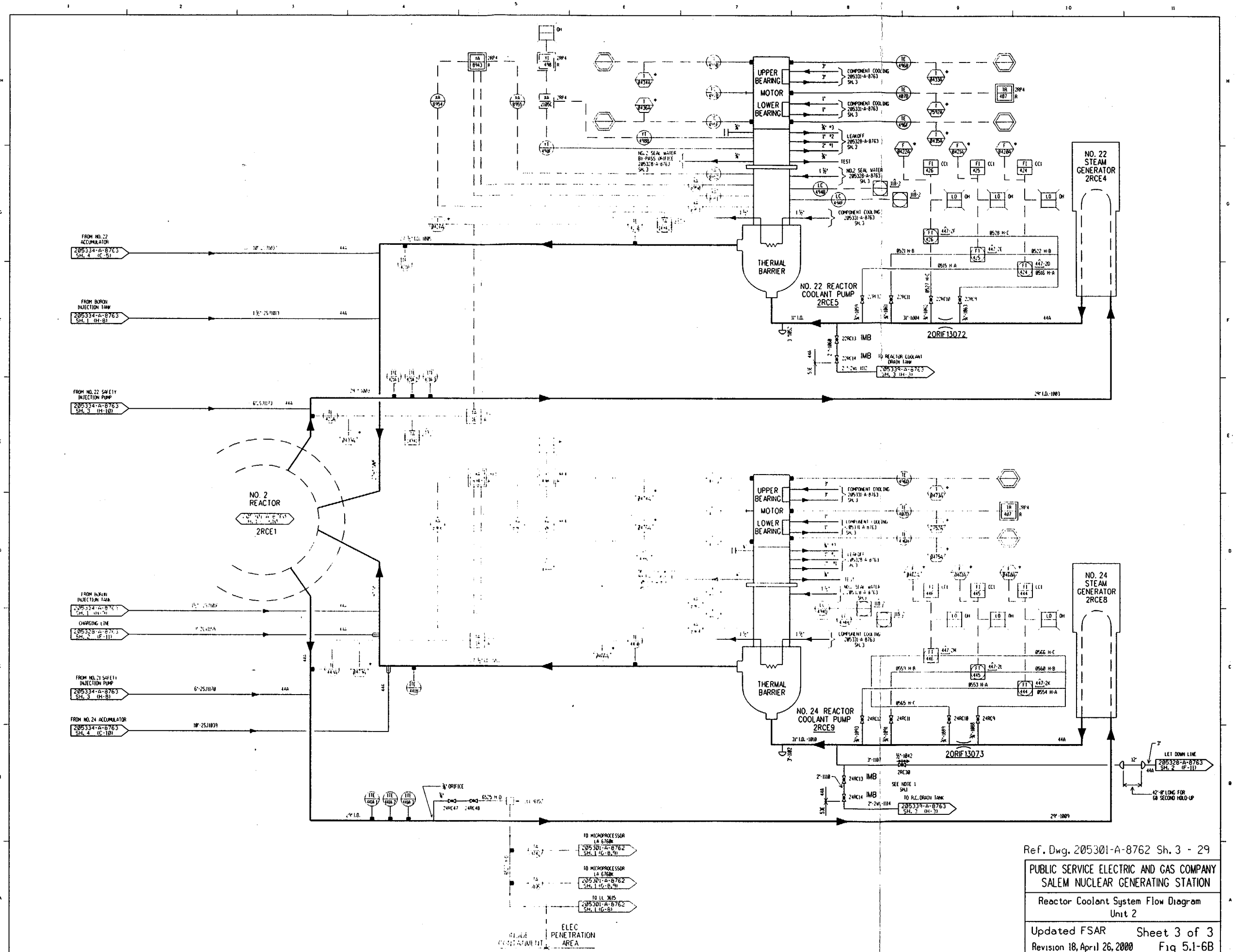

Ref. Dwg. 205301-A-8762 Sh. 3 - 29

PUBLIC SERVICE ELECTRIC AND GAS COMPANY
SALEM NUCLEAR GENERATING STATION

Reactor Coolant System Flow Diagram
Unit 2

Updated FSAR Sheet 3 of 3
Revision 18, April 26, 2000 Fig 5.1-6B

DESIGN CLASSIFICATION				
BOUNDARY *	SAFETY RELATED	SEISMIC	NUCLEAR	QUALITY ASSUR.
1544A, B	YES	I	I	YES
1544C	YES	I	II	YES
1544D	YES	I	II	YES
1544E	YES	I	II	YES
1528C	NO	III	NONE	NO
1533B	YES	I	II	YES
1548J	YES	I	II	YES
1548P	NO	II	III	NO
1553E,F	NO	III	III	NO
1556A	YES	I	II	YES
1556D	NO	II	NONE	A
1556E	NO	II	II	NO

* IT SHALL BE UNDERSTOOD THAT BOUNDARY NUMBERS SHOWN ON THIS DRAWING SHALL CONTAIN THE PREFIX "15" (i.e. 1544A, ETC.) UNLESS OTHERWISE NOTED.

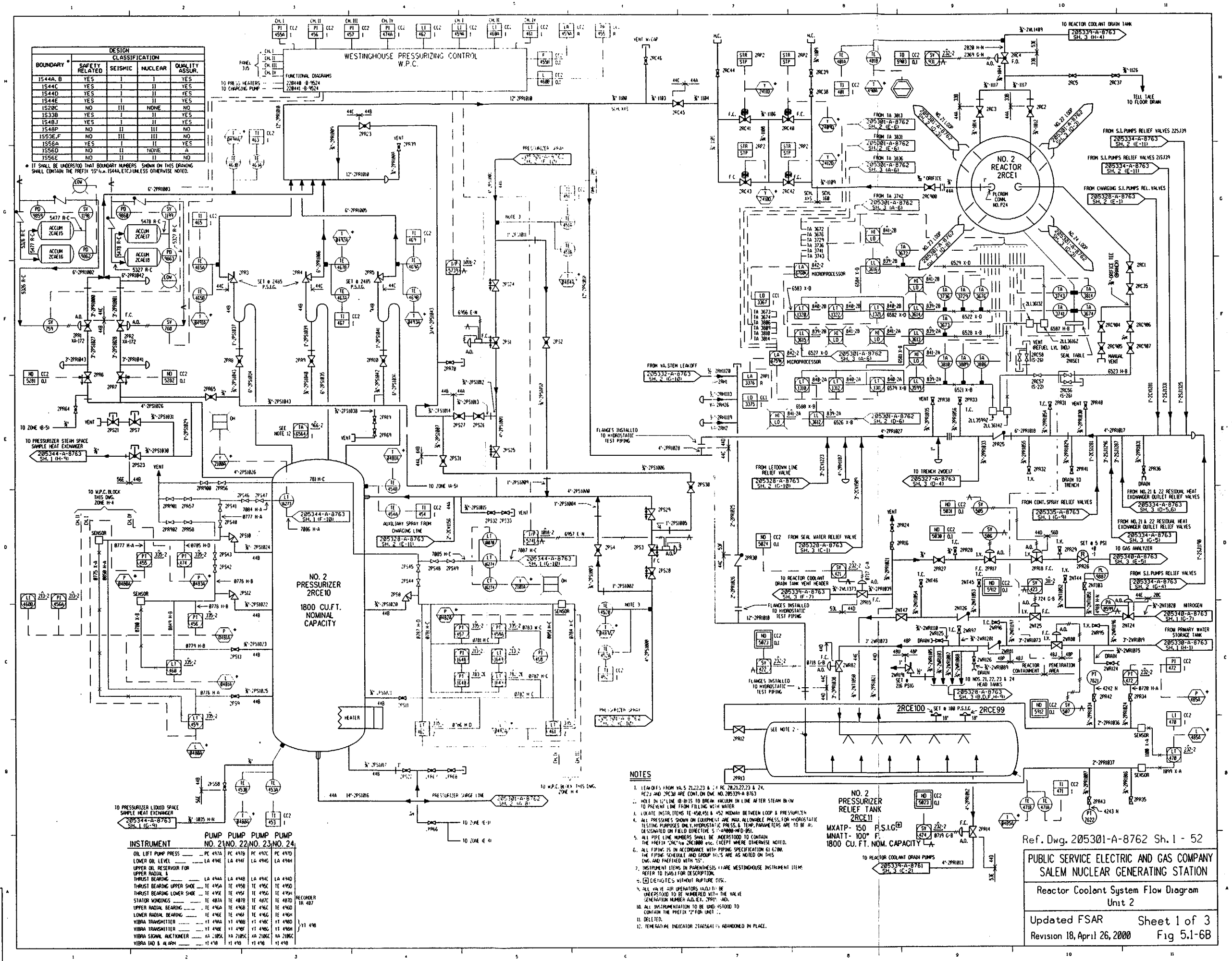

INSTRUMENT	PUMP NO. 21	PUMP NO. 22	PUMP NO. 23	PUMP NO. 24	
OIL LIFT PUMP PRESS ____	PC 497A	PC 497B	PC 497C	PC 497D	
LOWER OIL LEVEL ____	LA 494E	LA 494F	LA 494G	LA 494H	
UPPER OIL RESERVOIR FOR UPPER RADIAL & THRUST BEARING ____	LA 494A	LA 494B	LA 494C	LA 494D	RECORDER TR 487
THRUST BEARING UPPER SHOE	TE 495A	TE 495B	TE 495C	TE 495D	
THRUST BEARING LOWER SHOE	TE 495E	TE 495F	TE 495G	TE 495H	
STATOR WINDINGS ____	TE 487A	TE 487B	TE 487C	TE 487D	
UPPER RADIAL BEARING	TE 496A	TE 496B	TE 496C	TE 496D	
LOWER RADIAL BEARING	TE 496E	TE 496F	TE 496G	TE 496H	
VIBRA TRANSMITTER	YI 498A	YI 498B	YI 498C	YI 498D	YI 498
VIBRA TRANSMITTER	YI 498E	YI 498F	YI 498G	YI 498H	
VIBRA SIGNAL AUGMENTER	XA 2185C	XA 2186C	XA 2187C	XA 2188C	
VIBRA IAD & ALARM	YI 498	YI 498	YI 498	YI 498	

NOTES

1. LEAKOFFS FROM VALS 21,22,23 & 24 RCP2A AND 2RC3B ARE CONT. ON DWG. NO. 205339-A 8763
2. HOLE IN 12" LINE (B-B) IS TO BREAK VACUUM IN LINE AFTER STEAM BLOW TO PREVENT LINE FROM FILLING WITH WATER
3. LOCATE INSTR. ITEMS TE-458,451 & 452 MIDWAY BETWEEN LOOP & PRESSURIZER
4. ALL PRESSURES SHOWN ON EQUIPMENT ARE MAX. ALLOWABLE PRESS. FOR HYDROSTATIC TESTING PURPOSES ONLY. HYDROSTATIC PRESS. & TEMP. PARAMETERS ARE TO BE AS DESIGNATED ON FIELD DIRECTIVE S-2-A-0000-MED-001.
5. ALL PIPE LINE NUMBERS SHALL BE UNDERSTOOD TO CONTAIN THE PREFIX "2RC" (i.e. 2RC1000 etc. EXCEPT WHERE OTHERWISE NOTED.
6. ALL PIPING IS IN ACCORDANCE WITH PIPING SPECIFICATION G1 G2NA. THE PIPING SCHEDULE AND GROUP NOS. ARE AS NOTED ON THIS DWG. AND PREFIXED WITH "15".
7. INSTRUMENT ITEMS IN PARENTHESIS (-) ARE WESTINGHOUSE INSTRUMENT ITEMS REFER TO FSAR FOR DESCRIPTION.
8. [X] DENOTES WITHOUT RUPTURE DISC.
9. ALL VALVE AIR OPERATORS SHOULD BE UNDERSTOOD TO BE NUMBERED WITH THE VALVE GENERATION NUMBER (E.G. 2PR1-ADA).
10. ALL INSTRUMENTATION TO BE UNDERSTOOD TO CONTAIN THE PREFIX "2" FOR UNIT 2.
11. DELETED.
12. TEMPERATURE INDICATOR 2TAE5641 IS ABANDONED IN PLACE.

NOTE: FOR VALVE ARRANGEMENTS NOT SHOWN ON THIS SHEET, REFER TO DWGS.

Ref. Dwg. 205301-A-8762 Sh. 1 - 52

PUBLIC SERVICE ELECTRIC AND GAS COMPANY
SALEM NUCLEAR GENERATING STATION

Reactor Coolant System Flow Diagram
Unit 2

Updated FSAR Sheet 1 of 3
Revision 18, April 26, 2000 Fig 5.1-6B

DESIGN CLASSIFICATION				
BOUNDARY *	SAFETY RELATED	SEISMIC	NUCLEAR	QUALITY ASSUR.
1544A	YES	I	I	YES
1544B	YES	I	I	YES
1544C	YES	I	II	YES
1544D	YES	I	II	YES
1544E	YES	I	II	YES
1520C	NO	III	NONE	NO
1533B	YES	I	II	YES
1548J	YES	I	II	YES
1548P	NO	II	III	NO
1553E,F	NO	III	III	NO
1556D	NO	II	III	NO
1556E	NO	II	III	NO

* IT SHALL BE UNDERSTOOD THAT BOUNDARY NUMBERS SHOWN ON THIS DRAWING SHALL CONTAIN THE PREFIX "15" (i.e. 1544A, ETC.) UNLESS OTHERWISE NOTED.

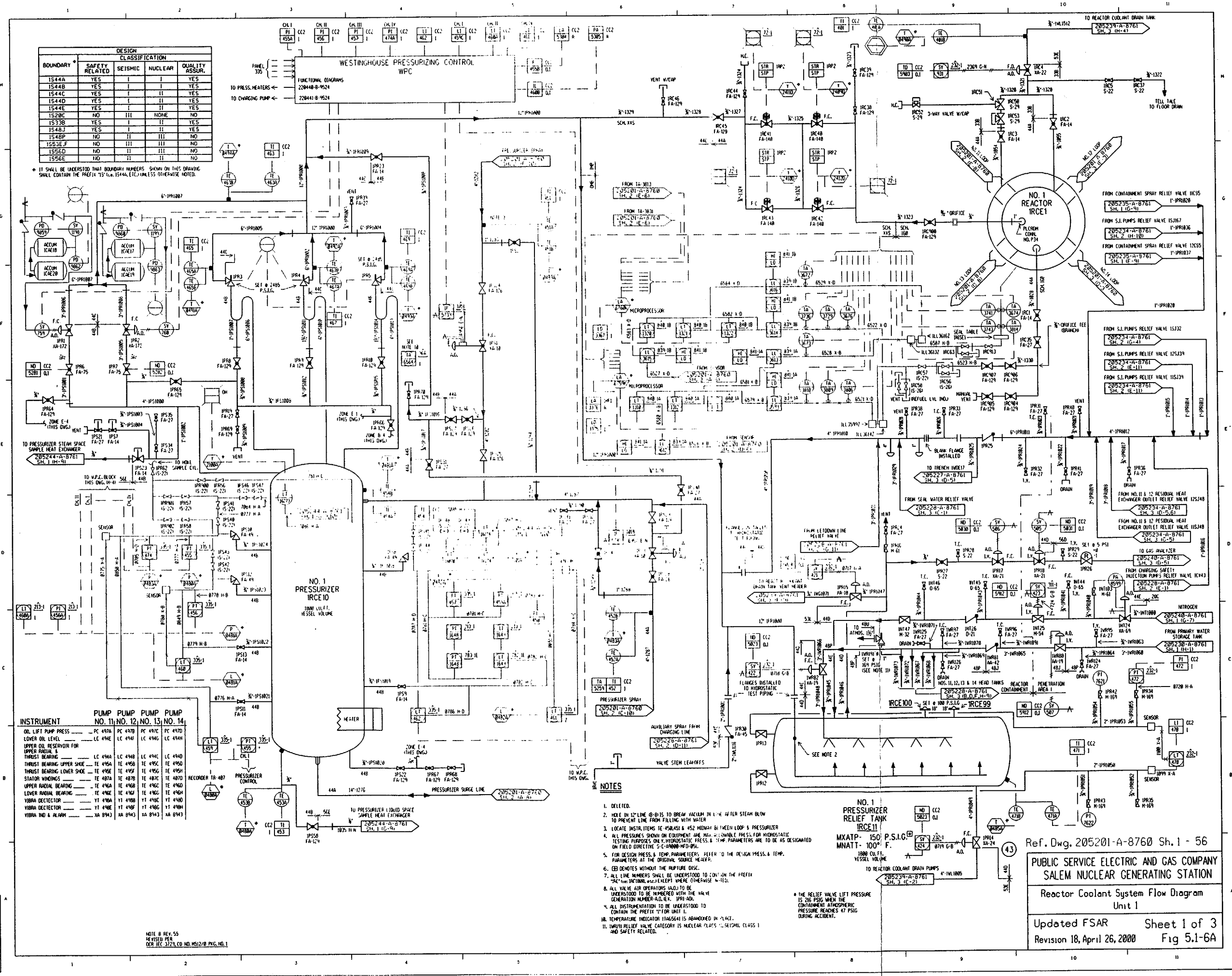

INSTRUMENT	PUMP NO. 11	PUMP NO. 12	PUMP NO. 13	PUMP NO. 14
OIL LIFT PUMP PRESS	PC 497A	PC 497B	PC 497C	PC 497D
LOWER OIL LEVEL	LC 494E	LC 494F	LC 494G	LC 494H
UPPER OIL RESERVOIR FOR UPPER RADIAL & THRUST BEARING	LC 494A	LC 494B	LC 494C	LC 494D
THRUST BEARING UPPER SHOE	TE 495A	TE 495B	TE 495C	TE 495D
THRUST BEARING LOWER SHOE	TE 495E	TE 495F	TE 495G	TE 495H
STATOR WINDINGS	TE 487A	TE 487B	TE 487C	TE 487D
UPPER RADIAL BEARING	TE 496A	TE 496B	TE 496C	TE 496D
LOWER RADIAL BEARING	TE 496E	TE 496F	TE 496G	TE 496H
VIBRA DECTECTOR	YT 498A	YT 498B	YT 498C	YT 498D
VIBRA DECTECTOR	YT 498E	YT 498F	YT 498G	YT 498H
VIBRA IND & ALARM	XA 8943	XA 8943	XA 8943	XA 8943

NOTE B REV. 55
REVISED PER
DCR IEC 3729, CO NO. M5128/B PKG. NO. 1

NOTES

1. DELETED.
2. HOLE IN 12" LINE (8-8)15 TO BREAK VACUUM IN LINE AFTER STEAM BLOW TO PREVENT LINE FROM FILLING WITH WATER
3. LOCATE INSTRUMENTS TE 495A,B & 452 MIDWAY BETWEEN LOOP & PRESSURIZER
4. ALL PRESSURES SHOWN ON EQUIPMENT ARE MAXIMUM ALLOWABLE PRESS. FOR HYDROSTATIC TESTING PURPOSES ONLY. HYDROSTATIC PRESS. & TEMP. PARAMETERS ARE TO BE AS DESIGNATED ON FIELD DIRECTIVE S-C-A9000-MFD-054.
5. FOR DESIGN PRESS. & TEMP. PARAMETERS REFER TO THE DESIGN PRESS. & TEMP. PARAMETERS AT THE ORIGINAL SOURCE HEADER.
6. (FD) DENOTES WITHOUT THE RUPTURE DISC.
7. ALL LINE NUMBERS SHALL BE UNDERSTOOD TO CONTAIN THE PREFIX "1RC" (i.e. 1RC1000, etc.) EXCEPT WHERE OTHERWISE NOTED.
8. ALL VALVE AOR OPERATORS (A.O.) TO BE UNDERSTOOD TO BE NUMBERED WITH THE VALVE GENERATION NUMBER-A.O. (e.g. 1PR1-AO).
9. ALL INSTRUMENTATION TO BE UNDERSTOOD TO CONTAIN THE PREFIX "1" (FOR UNIT 1.
10. TEMPERATURE INDICATOR 1TA6564 IS ABANDONED IN PLACE.
11. 1WR99 RELIEF VALVE CATEGORY IS NUCLEAR CLASS 1, SEISMIC CLASS I AND SAFETY RELATED.

* THE RELIEF VALVE LIFT PRESSURE IS 216 PSIG WHEN THE CONTAINMENT ATMOSPHERIC PRESSURE REACHES 47 PSIG DURING ACCIDENT.

NOTE: FOR VALVE MARK NOS. NOT SHOWN SEE INDEX SHEETS 1 & 2.

PUBLIC SERVICE ELECTRIC AND GAS COMPANY
SALEM NUCLEAR GENERATING STATION

Reactor Coolant System Flow Diagram
Unit 1

Updated FSAR — Sheet 1 of 3
Revision 18, April 26, 2000 — Fig 5.1-6A